eProjects
Work Order Numbers:
796444

Appropriation: MCON

BACHELOR ENLISTED QUARTERS

At the

MCB Cherry Point, NC

(P-136)

DESIGNED BY:

NAVFAC MID-ATLANTIC
6504 HAMPTON BOULEVARD
NORFOLK, VIRGINIA 23508

REQUEST FOR PROPOSAL PREPARED BY:

Architectural: Marvin Riedel, RA
Civil: Steve Medvick, P.E.
Structural: Kanus Ulrichs, P.E.
Mechanical: Joe McKeown, P.E.
Electrical: Bruce Rackliff, E.I.T.
Fire Prot.: David Shindle, P.E.
Geotechnical: Donald Petteway, P.E.
Interior Design: Rosemary Gray, NCIDQ
Specification: James Collins

Date: November 17, 2010

REQUEST FOR PROPOSAL APPROVED BY:

For Commander, NAVFAC MID-ATLANTIC:
Date:

2010.11.19
15:10:36
-05'00'

THIS PAGE HAS BEEN INTENTIONALLY LEFT BLANK

DESIGN/BUILD RFP

TABLE OF CONTENTS

PART 1 – CONTRACT DOCUMENTS
(Included under separate attachment)

PART 2 – CONTRACT REQUIREMENTS

PART 3 – PROJECT PROGRAM

PART 4 – PERFORMANCE TECHNICAL SPECIFICATIONS (PTS)

PART 5 – PRESCRIPTIVE TECHNICAL SPECIFICATIONS

PART 6 – ATTACHMENTS

THIS PAGE HAS BEEN INTENTIONALLY LEFT BLANK

PART 2

GENERAL REQUIREMENTS

THIS PAGE HAS BEEN INTENTIONALLY LEFT BLANK

PROJECT TABLE OF CONTENTS

DIVISION 01 - GENERAL REQUIREMENTS

01 14 00.05 20 WORK RESTRICTIONS FOR DESIGN-BUILD
01 20 00.05 20 PRICE AND PAYMENT PROCEDURES FOR DESIGN-BUILD
01 30 00.05 20 ADMINISTRATIVE REQUIREMENTS FOR DESIGN-BUILD
01 31 19.05 20 POST AWARD MEETINGS
01 32 17.05 20 NETWORK ANALYSIS SCHEDULES (NAS) FOR DESIGN-BUILD
01 33 00.05 20 CONSTRUCTION SUBMITTAL PROCEDURES
01 33 10.05 20 DESIGN SUBMITTAL PROCEDURES
01 33 29 LEED(TM) DOCUMENTATION
01 35 13 SPECIAL PROJECT PROCEDURES
01 35 26 GOVERNMENTAL SAFETY REQUIREMENTS
01 45 00.05 20 DESIGN AND CONSTRUCTION QUALITY CONTROL
01 50 00.05 20 TEMPORARY FACILITIES AND CONTROLS FOR DESIGN-BUILD
01 57 13.00 22 EROSION AND SEDIMENT CONTROL
01 57 19.00 20 TEMPORARY ENVIRONMENTAL CONTROLS
01 57 19.01 20 SUPPLEMENTAL TEMPORARY ENVIRONMENTAL CONTROLS
01 62 35 RECYCLED / RECOVERED MATERIALS
01 74 19.05 20 CONSTRUCTION AND DEMOLITION WASTE MANAGEMENT FOR DESIGN-BUILD
01 78 24.05 20 FACILITY OPERATION AND MAINTENANCE SUPPORT INFORMATION
01 78 30.00 22 DIGITAL DATA DELIVERABLES (GIS)

DIVISION 27 - COMMUNICATIONS

27 10 00 BUILDING TELECOMMUNICATIONS CABLING SYSTEM

DIVISION 33 - UTILITIES

33 82 00 TELECOMMUNICATIONS OUTSIDE PLANT (OSP)

-- End of Project Table of Contents --

THIS PAGE HAS BEEN INTENTIONALLY LEFT BLANK

SECTION 01 14 00.05 20

WORK RESTRICTIONS FOR DESIGN-BUILD
11/07

PART 1 GENERAL

1.1 SUBMITTALS

The use of a "G" following a submittal indicates that a Government approval action is required. Submit the following in accordance with Section 01 33 10.05 20 DESIGN SUBMITTAL PROCEDURES and Section 01 33 00.05 20 CONSTRUCTION SUBMITTAL PROCEDURES.

SD-01 Preconstruction Submittals

List of contact personnel; G

1.2 SPECIAL SCHEDULING REQUIREMENTS

a. The nearby buildings and utilities will remain in operation during the entire construction period. Conduct operations so as to cause the least possible interference with normal operations of the activity.

b. Permission to interrupt any Activity roads, railroads, and/or utility service shall be requested in writing a minimum of 15 calendar days prior to the desired date of interruption.

c. NMCI Contractor Access: The NMCI Contractor must be allowed access to the facility towards the end of construction (finishes 90% complete, rough-in 100% complete, Inside Plant (ISP)/Outside Plant (OSP) infrastructure in place) to provide equipment in the telecommunications rooms and make final connections. The Contractor will be required to coordinate their efforts with the NMCI contractor to facilitate joint use of building spaces during the final phases of construction and work the coordination effort into the construction schedule. Requirements for NMCI are specified in Part 4, D50 ELECTRICAL and G40 SITE ELECTRICAL UTILITIES.

1.3 CONTRACTOR ACCESS AND USE OF PREMISES

1.3.1 Activity Regulations

1.3.1.1 Subcontractors and Personnel Contacts

Furnish a list of contact personnel of the Contractor and subcontractors including addresses and telephone numbers for use in the event of an emergency. As changes occur and additional information becomes available, correct and change the information contained in previous lists.

1.3.1.2 Identification Badges

Identification badges, if required, will be furnished without charge. Application for and use of badges will be as directed. Furnish a completed EMPLOYMENT ELIGIBILITY VERIFICATION form (DHS FORM I-9) for all personnel requesting badges. This form is available at

http://uscis.gov/graphics/formsfee/forms/files/i-9.pdf. Immediately report instances of lost or stolen badges to the Contracting Officer.

1.3.2 Working Hours

Regular working hours shall consist of an 8 1/2 hour period, Monday through Friday, excluding Government holidays.

1.3.3 Work Outside Regular Hours

Work outside regular working hours requires Contracting Officer approval. Make application 15 calendar days prior to such work to allow arrangements to be made by the Government. During periods of darkness, the different parts of the work shall be lighted in a manner approved by the Contracting Officer.

1.3.4 Occupied Building

The Contractor shall be working around existing buildings which are occupied. Do not enter the buildings without prior approval of the Contracting Officer.

1.3.5 Utility Cutovers and Interruptions

a. Make utility cutovers and interruptions after normal working hours or on Saturdays, Sundays, and Government holidays. Conform to procedures required in the paragraph "Work Outside Regular Hours."

b. Ensure that new utility lines are complete, except for the connection, before interrupting existing service.

c. Interruption to water, sanitary sewer, storm sewer, telephone service, electric service, air conditioning, heating, fire alarm, and compressed air shall be considered utility cutovers pursuant to the paragraph entitled "Work Outside Regular Hours."

d. Operation of Station Utilities: The Contractor shall not operate nor disturb the setting of control devices in the station utilities system, including water, sewer, electrical, and steam services. The Government will operate the control devices as required for normal conduct of the work. The Contractor shall notify the Contracting Officer giving reasonable advance notice when such operation is required.

1.3.5.1 Location of Underground Utilities

Obtain digging permits prior to start of excavation. Scan the construction site with electromagnetic or sonic equipment, and mark the surface of the ground or paved surface where existing underground utilities or utilities encased in pier structures are discovered. Verify the elevations of existing piping, utilities, and any type of underground or encased obstruction not indicated to be specified or removed but indicated or discovered during scanning in locations to be traversed by piping, ducts, and other work to be conducted or installed.

a. Notification Prior to Excavation: Notify the Contracting Officer at least 15 days prior to starting excavation work.

1.4 SECURITY REQUIREMENTS

Contract Clause "FAR 52.204-2, Security Requirements and Alternate II," "FAC 5252.236-9301, Special Working Conditions and Entry to Work Area," and the following apply:

1.4.1 Contractor Access to MCAS Cherry Point and Outlying Areas

No employee or representative of the Contractor will be admitted to the work site without an Identification Badge unless specifically authorized admittance to the worksite by the Contracting Officer.

Per Air Station Order 5500.14, within five (5) days of contract award, the contractor shall provide the following information on all personnel that will be providing services aboard the US Marine Corps Air Station, Cherry Point, North Carolina and its outlying areas. These areas include, but are not limited to Oak Grove, Piney Island, BT-11, MCALF Bogue Field and MCOLF Atlantic.

a. A list of all employees including name, social security number, date of birth and mailing address.

b. In order to obtain access to MCAS Cherry Point and obtain an identification badge, each contractor employee shall be required to present the following information to the Pass and Identification Office:

1. Documentation of a criminal records check from the state or county covering the previous two years. Criminal record checks may be obtained from, but is not limited to the following sources: County Courthouse, Defense Security Service (www.dss.mil) and/or Infolink Screening Services, Inc. (www.infolinkscreening.com). Infolink Screening Services is listed as another possible source to obtain a criminal background check. The Government does not endorse nor is it affiliated with Infolink Screening Services.

2. Picture Identification Card from a state or federal agency.

3. Proof of immigration status. Acceptable documents include birth certificate, Immigration and Naturalization Service (INS) forms, and passports.

4. Proof of employment.

5. Letter from contractor reflecting the contract number and term of the contract.

c. If an employee is terminated prior to the end of the contract, the contractor shall return the base identification card to the Contracting Officer. This requirement also applies to all subcontract employees.

d. In no event will a contractor employee be permitted access to the MCAS Cherry Point for the purpose of on-site performance without the documentation listed above. Failure to obtain this information will not result in extensions to contract start, delivery, or completion dates.

1.4.1.1 Documentation Requirements To Grant Access To Commercial And Contract Employers And Employees

Provide the following:

a. An approved contract or sponsorship letter from MCAS, Cherry Point. The letter must contain:

1. The employer's company/business name on it.

2. Contract number (as applicable).

3. Contract expiration/termination date (most important).

4. Flightline access (if required).

b. Contractors/employers must provide a letter by fax or other means to the Officer In Charge, ROICC; Facilities Contracting; etc, listing all employees (to include SSN's, date and place of birth) who will be requiring access to the installation. For contractors/employees who will be hired for a period more than 30 days, a contractor badge will be issued after the conditions outlined in this paragraph and below are met.

c. Contractors/employers must also provide a letter to the Officer In Charge, ROICC, Facilities Contracting, etc, listing all employees who will be requiring access to the installation for any period less than 30 days. Once all conditions are met, this letter (worker's name highlighted, stamped, initialed and statement saying criminal history check (CHC) was sighted) will be issued to each worker and is their authorization to access the installation.

d. All employers/employees must provide a CHC from the state or county level covering a minimum of two years. The CHC can not be more than 30 days old when brought to Pass & ID. CHC's may also be obtained from, but not limited to the following sources (*):

1. Your county courthouse(s) (Clerk of Court)

2. www.infolinkscreening.com (all states/SSN check)

3. www.123nc.com (North Carolina based but will do all states)

4. www.castlebranch.com (all states/SSN check)

5. www.accuratebackgroundinvestigations.com (all states/SSN check)

e. If you have lived in more than one county or state during the past two years, you must provide a criminal history check from each residence to cover the minimum two year requirement. Address will also be verified by driver's license.

f. Picture ID from a state or federal agency (i.e., valid driver's license with your current residence). If your driver's license does not show current residence, proof must be provided (i.e., paystub, rental agreement).

g. Social security card (to verify number provided by company).

h. If the employee is not a U.S. citizen, proof of immigration status must be provided and carried on their person at all times (resident alien (green card) or permanent resident card) (**).

i. All personnel hired as a contractor to work for companies aboard the installation (i.e., L-3, Boeing, NMCI) will provide a criminal history check or an approved visit authorization letter (submitted to the appropriate security manager) indicating the individual has a valid security clearance.

(*) The United States Government and the United States Marine Corps do not endorse nor are they affiliated with any of the screening services.

(**) Those hired under the H2B program will be processed in accordance with instructions received by the Supervisor, Pass & ID Office.

1.4.1.2 Motor Vehicle Operation

Ingress and egress of personnel will be subject to the security regulations of the Station.

a. All personnel must be made aware of the base speed limits:

Housing areas 5 mph
Parking areas 10 mph
All other areas 25 mph (unless otherwise posted)

b. Parking is in designed areas only, between two white lines. No parking is permitted in fire lanes, on grass or planted areas, in parking slots reserved for general officers and handicapped personnel.

c. Traffic accidents should be reported immediately to the Station Security Department by calling 252-466-4366.

d. All personnel entering the installation are subject to random vehicle inspections. The purpose of these inspections is to detect the theft of Government and private property, and to detect weapons, contraband or illegal drugs.

e. Vehicle Passes/Required Information on Privately Owned Vehicles - Advise company employees who desire to use their privately owned vehicles to personally bring the vehicle, vehicle registration, copy of vehicle insurance policy, valid state inspection documentation, and driver's license to the Main Gate Vehicle Pass Office, Building B-250, telephone 252-466-5921.

f. Access to Restricted Areas - Base entry passes allow access to designated areas on the installation only. Entry into off limits areas is prohibited unless the contract requires it.

g. Current Information - Contractors will be responsible for keeping the vehicle and employee lists current, and for securing and returning identification cards belonging to terminated employees to the Contracting Officer.

h. Station Entry/Visitor Passes - Contractor station entry passes will be valid for each entry aboard Marine Corps Air Station, Cherry Point from 6:00 a.m. to 6:00 p.m., Monday through Friday only, unless prior arrangements have been made with the Resident Officer in Charge of

Construction (ROICC) Cherry Point, and the Provost Marshall Officer (PMO), Marine Corps Air Station, Cherry Point, has been notified. The passes are the property of the station and are to be returned to Visitors Control at the Main (East) Gate upon completion of the contract or termination of employment. Replacement passes must be requested in writing and be accomplished by written authorization from the Contracting Officer. Visitor Passes will be issued from the Main Gate Visitor Pass Office, Building B-250, telephone 252-466-3330.

i. Providing Information to Subcontractors - Prime Contractors shall be responsible for ensuring that subcontractors receive security information. Failure to comply with the specified requirements will result in prime contractors and subcontractors being denied access to the construction site.

1.4.1.3 Security Of Contractor-Owned Equipment And Materials

The Contractor shall be responsible for control and security of Contractor-owned equipment and materials at the work site. Report immediately, missing/lost/stolen property to the Station Security Department as each case occurs.

PART 2 PRODUCTS

Not used.

PART 3 EXECUTION

Not used.

-- End of Section --

SECTION 01 20 00.05 20

PRICE AND PAYMENT PROCEDURES FOR DESIGN-BUILD
08/10

PART 1 GENERAL

1.1 REFERENCES

The publications listed below form a part of this specification to the extent referenced. The publications are referred to within the text by the basic designation only.

U.S. ARMY CORPS OF ENGINEERS (USACE)

EP-1110-1-8	(2009) Construction Equipment Ownership and Operating Expense Schedule, Volumes 1 - 12 (Regions I - XII)

1.2 SUBMITTALS

The use of a "G" following a submittal indicates that a Government approval action is required. Submit the following in accordance with Section 01 33 10.05 20 DESIGN SUBMITTAL PROCEDURES and Section 01 33 00.05 20 CONSTRUCTION SUBMITTAL PROCEDURES.

SD-01 Preconstruction Submittals

EARNED VALUE REPORT; G

1.3 EARNED VALUE REPORT

1.3.1 Schedule Instructions

This contract requires the use of a cost-loaded Network Analysis Schedule. The information required for the Schedule of Prices will be entered as an intregal part of the Network Analysis Schedule (NAS) and its Mathematical Analysis. Provide a detailed breakdown of the contract price, giving quantities for each of the various kinds of work, unit prices, and extended prices therefor. Costs shall be summarized and totals provided for each construction category.

Payments will not be made until the Cost Loaded Critical Path Method (CPM) schedule has been submitted to and accepted by the Contracting Officer. The Schedule of Prices shall be separated as follows:

a. Primary Facility/s Cost Breakdown: Defined as work on the primary facility/s out to the 1.5 m (5 foot) line. Work out to the 1.5 m (5 foot) line shall include construction encompassed within a theoretical line 1.5 m (5 foot) from the face of exterior walls and shall include attendant construction, such as pad mounted HVAC equipment, that may extend beyond the 1.5 m (5 foot) line.

b. Supporting Facilities Cost Breakdown: Defined as site work, including incidental work, outside the 1.5 m (5 foot) line.

1.3.1.1 Additional Facility Price Data

For the purposes of historical pricing data collection for Government use only, simultaneously submit this data to the NAVFAC Chief Cost Engineer at the following mailing or email address within 30 days of contract award:

a. Commander
Naval Facilities Engineering Command Atlantic
6505 Hampton Blvd.
Norfolk, VA 23508-1278
Attention: CI Cost

b. FacilityCostData@navy.mil

This information is for Government internal purposes only for tracking historical primary and support facility pricing and will not be used for any scope, price, or evaluation purposes.

1.3.2 Schedule Requirements for HVAC TAB

The field work required by PTS Section D30, HVAC, shall be broken down in the NAS by separate line items which reflect measurable deliverables. Specific payment percentages for each line item shall be determined on a case by case basis for each contract. The line items shall be as follows:

a. Approval of Design Review Report.

b. Approval of the pre-field engineering report.

c. Season I field work.

d. Approval of Season I report.

e. Completion of Season I field QA check.

f. Approval of Season II report.

1.3.3 Data Required

This contract requires the use of a cost-loaded Network Analysis Schedule. The information required for the Schedule of Prices will be entered as an intregal part of the Network Analysis Schedule (NAS) and its Mathematical Analysis. Provide a detailed breakdown of the contract price, giving quantities for each of the various kinds of work, unit prices, and extended prices therefore. Costs shall be summarized and totals provided for each construction category.

1.3.4 Real Property Assets

Real Property Assets identified in Section 01 33 10.05 20 DESIGN SUBMITTAL PROCEDURES paragraph "REAL PROPERTY RECORD" apply to work covered by this specification.

Divide detailed asset breakdown into each construction category, sufficient for completion of the DD Form 1354, Transfer and Acceptance of Military Real Property. Subcontractors who may be involved in work under more than one of these categories shall be advised of this requirement in order to furnish such data without delay. Assets and construction categories may be modified by the Contracting Officer as necessary during course of work.

Cost and facility data accumulated under this section are required in the preparation of DD Form 1354. Coordinate with Section 01 33 10.05 20 DESIGN SUBMITTAL PROCEDURES paragraph "REAL PROPERTY RECORD".

1.4 CONTRACT MODIFICATIONS

In conjunction with the Contract Clause "DFARS 252.236-7000, Modification Proposals-Price Breakdown," and where actual ownership and operating costs of construction equipment cannot be determined from Contractor accounting records, equipment use rates shall be based upon the applicable provisions of the EP-1110-1-8.

1.5 CONTRACTOR'S INVOICE AND CONTRACT PERFORMANCE STATEMENT

1.5.1 Content of Invoice

Requests for payment will be processed in accordance with the Contract Clause "FAR 52.232-27, Prompt Payment Construction Contracts," and shall include items required by FAR 52.232-5, "Payments under Fixed-Price Construction Contracts" and shall be accompanied with the following documents. If NFAS Clause 5252.232-9301 is present in the contract, documents shall be provided as attachments in Wide Area Work Flow (WAWF). The maximum size limit per attachment is less than 2 megabyte but you may have an unlimited amount of attachments. If a document cannot be attached in WAWF due to system or size restriction it shall be provided as instructed by the Contracting Officer.

a. The Contractor's invoice on Form 7300/30 furnished by the Government for this purpose, showing in summary form, the basis for arriving at the amount of the invoice. Invoice Form shall be certified by the QC and provide the number of copies required by the Contracting Officer.

b. The Contract Performance Statement on the form furnished by the Government for this purpose, showing in detail, the estimated cost, percentage of completion, and value of completed performance for each of the construction categories stated in this contract. Submit number of copies required by the Contracting Officer.

c. Final invoice shall be accompanied by Final Release Form, NAVFAC Form 4330/07, furnished by the Government. If the contractor is incorporated, the release shall contain the corporate seal. An officer of the corporation shall sign the release and the corporate secretary shall certify the release.

d. Updated schedule if not already submitted per Section 01 32 17.05 20 NETWORK ANALYSIS SCHEDULES (NAS) FOR DESIGN-BUILD.

e. Contractor Safety Self Evaluation Checklist (original).

f. Monthly Work-hour Report.

g. Solid Waste Disposal Report.

h. Other supporting documents as requested.

1.5.2 Submission of Invoices

a. All invoices shall be submitted electronically via WAWF if NFAS Clause

5252.232-9301 is present in the contract otherwise it shall be submitted in accordance with contract invoicing instructions. All other paper invoices shall be forwarded with specific marking on the envelope. This marking shall be in the front lower left hand corner, in large letters, "INVOICES - ENCLOSED."

b. Invoices not completed in accordance with contract requirements will be returned to the Contractor for correction of the deficiencies.

c. Final invoices not accompanied by Final Release Form will be considered incomplete and will be returned to the Contractor. For final invoices being submitted via WAWF, the original Contractor's Final Release form must be provided to the respective Contracting Officer prior to submission of the final invoice. Once receipt of the original final release form has been confirmed by the Contracting Officer, Contractor shall then submit final invoice and attach copy of the final release form in WAWF.

1.6 PAYMENTS TO THE CONTRACTOR

Payments will be made on submission of itemized requests by the Contractor which comply with the requirements of this section, and will be subject to reduction for overpayments or increase for underpayments made on previous payments to the Contractor.

PART 2 PRODUCTS

Not used.

PART 3 EXECUTION

Not used.

-- End of Section --

SECTION 01 30 00.05 20

ADMINISTRATIVE REQUIREMENTS FOR DESIGN-BUILD
11/07

PART 1 GENERAL

1.1 MINIMUM INSURANCE REQUIREMENTS

Procure and maintain during the entire period of performance under this contract the following minimum insurance coverage:

a. Comprehensive general liability: $500,000 per occurrence

b. Automobile liability: $200,000 per person, $500,000 per occurrence for bodily injury, $20,000 per occurrence for property damage

c. Workmen's compensation as required by Federal and State workers' compensation and occupational disease laws.

d. Employer's liability coverage of $100,000, except in States where workers compensation may not be written by private carriers,

e. Others as required by the State.

1.2 CONTRACTOR PERSONNEL REQUIREMENTS

1.2.1 Subcontractor Special Requirements

1.2.1.1 Asbestos Containing Material

All contract requirements of PART 4, F20 SELECTIVE DEMOLITION,assigned to the Private Qualified Person (PQP) shall be accomplished directly by a first tier subcontractor.

1.2.1.2 HVAC TAB

All contract requirements of TAB work required by PART 4, D30, HVAC, shall be accomplished directly by a first tier subcontractor. No TAB work required by PART 4, D30, HVAC, shall be accomplished by a second tier subcontractor.

1.2.1.3 Qualified Testing Organization

All contract requirements of work required to be performed by a Qualified Testing Organization in PART 4, D50 ELECTRICAL and G40 SITE ELECTRICAL UTILITIES, shall be accomplished directly by a first tier subcontractor. No work to be performed by a Qualified Testing Organization, required by PART 4, D50 and G40 shall be accomplished by a second tier subcontractor.

1.3 SUPERVISION

Have at least one qualified supervisor capable of reading, writing, and conversing fluently in the English language on the job site during working hours. In addition, the Quality Control (QC) representative shall also have fluent English communication skills.

1.4 AVAILABILITY OF CADD DRAWING FILES

After award and upon request, the electronic "Computer-Aided Drafting and Design (CADD)" drawing files will be made available to the Contractor for use in preparation of construction drawings and data related to the referenced contract subject to the following terms and conditions.

Data contained on these electronic files shall not be used for any purpose other than as a convenience in the preparation of construction drawings and data for the referenced project. Any other use or reuse shall be at the sole risk of the Contractor and without liability or legal exposure to the Government. The Contractor shall make no claim and waives to the fullest extent permitted by law, any claim or cause of action of any nature against the Government, its agents or sub consultants that may arise out of or in connection with the use of these electronic files. The Contractor shall, to the fullest extent permitted by law, indemnify and hold the Government harmless against all damages, liabilities or costs, including reasonable attorney's fees and defense costs, arising out of or resulting from the use of these electronic files.

These electronic CADD drawing files are not construction documents. Differences may exist between the CADD files and the corresponding construction documents. The Government makes no representation regarding the accuracy or completeness of the electronic CADD files, nor does it make representation to the compatibility of these files with the Contractors hardware or software. In the event that a conflict arises between the signed and sealed construction documents prepared by the Government and the furnished CADD files, the signed and sealed construction documents shall govern. The Contractor is responsible for determining if any conflict exists. Use of these CADD files does not relieve the Contractor of duty to fully comply with the contract documents, including and without limitation, the need to check, confirm and coordinate the work of all contractors for the project.

If the Contractor uses, duplicates and/or modifies these electronic CADD files for use in producing construction drawings and data related to this contract, all previous indicia of ownership (seals, logos, signatures, initials and dates) shall be removed.

1.5 CLEANUP

Leave premises "broom clean." Clean interior and exterior glass surfaces exposed to view; remove temporary labels, stains and foreign substances; polish transparent and glossy surfaces; vacuum carpeted and soft surfaces. Clean equipment and fixtures to a sanitary condition. Replace filters of operating equipment. Clean debris from roofs, gutters, downspouts and drainage systems. Sweep paved areas and rake clean landscaped areas. Remove waste and surplus materials, rubbish and construction facilities from the site.

PART 2 PRODUCTS

Not used.

PART 3 EXECUTION

Not used.

-- End of Section --

SECTION 01 31 19.05 20

POST AWARD MEETINGS
04/10

PART 1 GENERAL

1.1 SUMMARY

This document includes post-award requirements for project kickoff and subsequent design and preconstruction meetings.

1.2 SUBMITTALS

The use of a "G" following a submittal indicates that a Government approval action is required. Submit the following in accordance with Section 01 33 10.05 20 DESIGN SUBMITTAL PROCEDURES.

SD-01 Preconstruction Submittals

Project Schedule; G

Performance Assessment Plan (PAP); G

1.3 POST AWARD KICKOFF MEETING

The Post Award Kickoff (PAK) meeting is made up of Contract Administration, Design Presentation, and Scheduling. If mutually beneficial to the Contractor and the Government, these elements may be addressed in a single meeting or multiple meetings.

1.3.1 PAK Meeting Schedule and Location

Within 21 calendar days after contract award, and prior to commencing work, meet with the Contracting Officer for the PAK meeting(s). The meeting shall be held at a specific time and place to be determined by the Contracting Officer.

1.3.2 PAK Meeting Outcomes

The meeting(s) outcomes are:

a. Integrate the Contractor and all client representatives into the project team.

b. Achieve consensus from the project team on any issues and concerns with the Contractor's technical proposal. The User(s) will make a presentation of their functional requirements. **Achieve consensus that User's functional requirements are understood and will be implemented into the project design.**

c. Establish and explain policies and procedures for completion of a successful project.

d. Establish clear lines of communication and points of contact for Government and Contractor team members.

e. Obtain an acceptable conceptual design including floor and site plans,

signed by the client, Contractor and other key team members.

f. Establish project design schedule, design submittal packaging, and preliminary construction schedule in accordance with Section 01 32 17.05 20 NETWORK ANALYSIS SCHEDULES (NAS) FOR DESIGN-BUILD. Discuss design milestones and events that need to be included in the Quality Control Communication Plan.

g. Establish procedure for design packages reviews, Contractor's resolution to comments, and Government's role in review of packages.

h. Establish clear expectations for facility turnover and providing DD Form 1354 asset management records to the Government.

1.3.3 PAK Meeting Contractor Attendees

The following Contractor key personnel shall attend the PAK meeting: Project Manager, Project Scheduler, Designer of Record (DOR) Representative(s), Superintendent, QC Manager, and DQC Manager. Optional attendees include: Principal, Assistant Project Manager, Design Staff representing each architectural/engineering discipline, major subcontractors and specialized supplemental QC personnel.

1.3.4 Contract Administration

Contract administration roles and responsibilities will be addressed.

1.3.5 Design Presentation/Development

The Contractor shall lead discussions to develop an understanding of the accepted technical proposal and conduct a working session to develop the approved conceptual site and floor plans, and building elevation. The Contractor shall anticipate that Users represented at the Design Presentation will provide additional functional information. At the end of the Design Presentation the Contractor shall provide either assurance that the updated design can be built with-in the budget or identify potential cost modification items and establish a follow-on Design Presentation Meeting to finalize a design that will include trade-offs to bring the project within the budget.

1.3.5.1 Design Presentation/Development Contractor Meetings Attendees

The following Contractor key personnel shall attend the Design Presentation: Project Manager, Project Scheduler, Cost Estimator, Lead Designer of Record, Design Staff responsible for each architectural/engineering discipline when facility design is discussed, Major Subcontractors, and DQC.

1.4 PARTNERING MEETING

LEVEL B PARTNERING: To most effectively accomplish this contract, the Government requires the formation of a cohesive partnership with the Contractor. Key personnel representing Base Facilities, the Designer of Record (DOR), principal individuals from NAVFAC MIDLANT and from the Resident Officer in Charge of Construction (ROICC) office, the project sponsor, and representative(s) of the facility user will be invited to participate in the partnering process. Key members of the Contractor and subcontractor teams, including senior management, must participate.

The partnership will draw on the strength of each organization in an effort to achieve a quality project done right the first time, within budget, on schedule, and without any safety mishaps.

The Contractor shall pay all costs associated with the partnering effort including meeting room and other incidental items. The participants shall bear their own costs for meals, lodging and transportation associated with partnering.

Before the partnering session, the Contractor shall coordinate with the facilitator requirements for incidental items (audio-visual equipment, two easels, flipchart paper, colored markers, note paper, pens/pencils, colored flash cards, etc.) and have these items available at the partnering session. The Contractor will copy documents for distribution to all attendees.

1.4.1 Initial Partnering Session

a. Will last one day.

b. Will include participants as listed under paragraph "PAK Meeting Attendees".

c. May be held at a location off base as agreed to by the partners.

d. The Contractor shall provide a Facilitator who is experienced in conducting Partnering Workshops. The Partnering Facilitator shall be acceptable to the Contracting Officer. He or she will be responsible for leading the team in a timely manner and making sure that issues are pursued and resolved to the maximum extent possible.

e. May take place with the PAK meeting.

1.4.2 Follow-on Partnering Session(s)

a. Shall be held as agreed to by the partners.

b. May be held concurrently with other scheduled meetings such as QC or scheduling.

c. May be held at a location off base, the project site, or in government facilities on base.

d. May include only participants required to resolve current issues.

e. Will generally last a half day or less and may utilize electronic means if mutually acceptable to all parties.

f. Will not require a facilitator unless desired by the partners.

1.5 PERFORMANCE ASSESSMENT PLAN (PAP)

The Performance Assessment Plan (PAP) shall be used to document design innovation and budget management, provide performance feedback to the Contractor, and as a basis for interim and final evaluations in the Construction Contractor Appraisal System (CCASS) on-line database.

It is the intent of the Government to establish the PAP based on tangible, measurable indicators of outstanding contractor performance, and on

commitments made in the Contractor's proposal. The initial PAP may be found on the NAVFAC Design-Build Request for Proposal Website in RFP PART 6 Attachments. Review and finalize the initial PAP during the Partnering Session. During the initial Partnering Session, the Government, the Contractor, the Designer-of-Record, and the Client will establish the PAP. Following the establishment of the PAP, the Contractor will present it, with his input, for update and discussion at project meetings which discuss project performance. Submit an updated PAP on a monthly basis with the invoice for that period as a minimum. A copy of the initial PAP is attached.

1.6 PROJECT SCHEDULE

Provide in accordance with Section 01 32 17.05 20 NETWORK ANALYSIS SCHEDULES (NAS) FOR DESIGN-BUILD.

1.7 DESIGN QUALITY ASSURANCE MEETINGS

After Government Quality Assurance (QA) of each Design Submittal has been completed, meet with the Government to discuss review comments for the specific design submittal.

Provide consolidated copies of all Government comments with annotations of Contractor's action beside them. Notify the Contracting Officer in writing within five (5) days after receipt of Government's comments if the Contractor disagrees with comments technically or interprets comments to exceed the requirements of the contract.

1.7.1 Design QA Meeting Attendees

The following Contractor key personnel shall attend the design QA meetings: Project Manager, QC Manager, DQC Manager, and Contractor's Design Staff (architect and engineering disciplines related to topics to be discussed).

1.7.2 Design QA Meeting Location

Meetings shall be located at the office of the Contracting Officer's QA Team or may be conducted at other locations or by electronic means if mutually acceptable to all parties.

1.7.3 Minimum Design QA Meeting Agenda

Address all Government comments that are unresolved and present clarification or supporting information requested by the Contracting Officer's QA team during the previous meeting.

1.8 PRECONSTRUCTION MEETING

Meet with the Contracting Officer to discuss construction items of concern to the Government and the Contractor such as outages, storage, trailer location, disposal of construction debris, safety, etc. at a location to be determined by the Contracting Officer. The Preconstruction meeting may take place with the PAK meeting or at any time prior to mobilization and before any construction work begins.

1.9 RECURRING MEETINGS

1.9.1 Quality Control and Production Meetings

Provide Quality Control and Production Meetings in accordance with UFGS Section 01 45 00.05 20 DESIGN AND CONSTRUCTION QUALITY CONTROL.

1.9.2 Safety Meetings

Provide Safety Meetings in accordance with UFGS Section 01 35 26 GOVERNMENTAL SAFETY REQUIREMENTS.

1.10 FACILITY TURNOVER PLANNING MEETINGS

Key personnel will meet to identify strategies to ensure the project is carried to expeditious closure and turnover to the Client. Start the turnover process at the PAK Meeting and convene the Facility Turnover Meetings once the project has reached approximately 75% completion or three to six months prior to Projected Completion Date or Contract Completion Date (CCD), whichever comes first. The Contracting Officer's Representative will lead the meetings and guide the discussions based on an agenda provided by the Government. See attached "Facility Turnover Planning Meeting Agenda" for typical meeting agenda. The Facility Turnover effort shall include the following:

a. PAK Meeting

1. Contracting Officer's Technical Representative (COTR) will provide the Facility Turnover Checklist and the Contractor, Client, and NAVFAC Representatives will compare Contractor's schedule to Facility Turnover Checklist to ensure all Contractor Checklist Items are included in the schedule and to discuss the scheduling impact of Client and NAVFAC Checklist Items.

2. Discuss the requirements of creating the Interim and Final DD Form 1354 to provide asset management records to the Government. Refer to Section 01 33 10.05 20 DESIGN SUBMITTAL PROCEDURES for requirements.

b. Facility Turnover Meetings -

1. Fill in the Facility Turnover Checklist including Contractor, Client, and NAVFAC Checklist Items and assign a person to be responsible for each item and a due date. The Contracting Officer's Representative will facilitate the assignment of responsibilities and fill out the Facility Turnover Checklist. See attached Facility Turnover Checklist.

2. Review the Contractor's updated schedule. The Contractor and the Contracting Officer's Representative shall develop a POAM for the completion of all Contractor, Client, and NAVFAC Checklist items.

3. Confirm that all Facility Turnover Checklist items will be completed on time for the scheduled Facility Turnover.

1.10.1 Facility Turnover Meeting Attendees

The following key personnel shall attend the Facility Turnover Meetings: Contractor QC Manager, Design Quality Control Manager, Superintendent,

Major Subcontractors, Designer-of-Record, Contracting Officer's Representative, Representative(s) of NAVFAC, the Facility Owner / Real Property Accounting Officer, and the Client.

PART 2 PRODUCTS

Not Used.

PART 3 EXECUTION

Not Used.

-- End of Section --

NAVFAC Red Zone
Facility Turnover Planning Meeting

AGENDA

I. Introduction and Overview – Purpose CM

The purpose of the Facility Turnover Planning Meeting is to address elements within the project team's purview – schedule management, assure completed facility complies with contract requirements, and other contractual issues. Each member of the project delivery team (Client, NAVFAC, and the contractor) has critical responsibilities to ensure timely completion and turnover of the new facility and each member should execute the NRZ process to achieve this end. The NRZ process provides a final re-focusing of attention to details of those key elements critical for a successful construction contract completion. In implementing NRZ processes, the NAVFAC/Contractor/Client team take a collective "snapshot" of contract status, identifying remaining actions to be accomplished, and confirm required resources needed for successful contract completion and turnover to the Client.

The Facility Turnover Planning Meeting is a collaborative effort between the Client, NAVFAC, and the contractor and results in a completed "NRZ Checklist/POAM Items" list that identifies the major items (and their due dates) that must be completed by the Contractor, the Client and the NAVFAC team to ensure timely completion of the contract.

II. Attendees

NAVFAC Echelon IV (PM); NAVFAC FEAD/ROICC Team (AROICC, CM, ET/QA, Contracting Officer); Client Team (Project Manager, Program Coordinator, User/Tenant); Contractor Team (Project Manager, Project Superintendent, CQC Manager)

III. Schedule to Completion (POAM) Contractor

IV. Schedule of Final Outfitting and Occupancy (POAM) Client

V. Critical feature(s) of project (POAM) CM

VI. Transfer of Maintenance Responsibility CM

VII. Systems training & O&M Manuals (POAM) CQC Manager

VIII. Other Items to include on NRZ checklists All

IX. Summary of Required Actions and Responsibility CM

Guidelines for conducting Facility Turnover Planning Meeting are as follows:

a. Meeting is held at approximately 75% construction contract completion or three to six months prior to BOD. NAVFAC representatives will include the Project Manager, Construction Manager/AROICC (CM) and Design Manager (DM), as appropriate. The contractor representatives include applicable prime contractor staff and decision-makers from major subcontractors. Design-Build contractors will have A-E representatives attending. The Client should include representatives from Public Works Officer (PWO) staff, a Client scope and financial decision maker, a user tenant representative, a facility start-up person, and others such as SPAWAR, NMCI, telephone, and furniture contractor, etc.

b. The purpose of the meeting is to plan the remaining work, identify critical project features that still need to be completed (such as "soft" construction contract requirements as shown on the NRZ Checklist/POAM Items), and to complete the filling out of the "NRZ Checklist/POAM Items".

c. The contractor, client and NAVFAC provide a POC and due date for each item on their checklist. The team fills in the checklists by selecting items applicable to the project, selects due dates on each item, and appoints a person who has responsibility to ensure the item gets completed by the due date. The CM will be responsible to monitor the milestones.

Facility Turnover Checklist Items

The tables below provide typical Facility Turnover Checklist Items for Contractor and Contracting Officer's Technical Representative (COTR) actions (Tables 1, 2, and 3, respectively). Items listed on the checklists are required to remain on the checklists if they are part of the project/contract or required by construction convention. Items not listed on the checklists, but required in the contract or by construction convention, must be added to the checklists by the Contractor and the COTR. Checklists are applicable to all contracts no matter what Category of Work.

The checklist items, points of contact and due dates shall initially be determined by the Contractor and the COTR during the Facility Turnover Planning Meeting. During execution of the Facility Turnover process, the checklist shall be updated as required to properly reflect project requirements. For each item on the entire list, the COTR, with input from the Contractor, shall indicate date completed and initial to indicate completion of the item. If a party fails to complete an item by the due date, this should be noted on the checklist and a new due date established and indicated. The completed Facility Turnover Checklist Items shall be placed in the contract file. The Contractor shall coordinate his items in Table 1 with the items in Tables 2 and 3.

THIS PAGE HAS BEEN INTENTIONALLY LEFT BLANK

Table 1

Contractor Checklist Items	Point of Contact	Due Date	Actual Complete Date	COTR Initials	Notes
a. Construction Completion Schedule					
b. Facility Delivery Closeout:					
Duct Air Leakage Testing					
HVAC System Test & Balance					
ACATS Controls Testing					
Conduct Second Seasons TAB					
Electrical Systems Testing					
Final utility systems connections (power, water, etc.)					
Superchlorination of potable water systems					
Plumbing / Other Mechanical Testing					
Elevator Certification(s)					
Specialized Equipment & Systems Inspections (Boilers, UPV, etc.)					
Fire Protection Systems Inspections and Performance Verification					
Communications / IT Systems Testing					
Security Systems Testing					
Other Specified Building Performance Requirements					
c. Other Contractor Items:					
Delivery of O&M Manuals					
Delivery of Equipment/Product Warranty List/Tag					
O&M/OMSI Training of Navy Personnel					
Site Restoration, if applicable					
Landscaping Complete					

Contractor Checklist Items	Point of Contact	Due Date	Actual Complete Date	COTR Initials	Notes
Pre-Final Inspection					
Final Inspection and Acceptance					
Delivery of Spare Parts, Extra Stock, Special Tools, etc					
Delivery of As-Built Drawings					
Delivery of Utility Record Drawings (if applicable)					
Delivery of Utility As-Built Drawings (if applicable)					
Beneficial Occupancy Date (BOD)					
Final Demobilization and Clean-up Completed					
Remove Construction Fence & Associated Coordination					
Pre-warranty Conference					
Project Close-out Meeting					
Coordination and Delivery of Facility Signage					
Final Cleaning					
Replace Construction Lock Cores and Re-keying					
Punch List Completion					
Provide DD1354 to Government CM					

Table 2

COTR Checklist Items for Coordination	Point of Contact	Due Date	Actual Complete Date	COTR Initials	Notes
Modification to FSC or BOSC to maintain/service new facility -Telephone service contract -Utilities service contract -Custodial service contract					
Installation of communications for phones and computers					
NMCI Installations or other networks					
Delivery and installation of furnished furniture					
Delivery and installation of furnished equipment					
User move-in					
GFE status/delivery schedule (GFCI, GFGI)					
Coordination of Intrusion Detection Systems and Physical Security Equipment					
Process operating permits					
Recycled/recovered materials report					
Coordination of IT and Communication Infrastructure and Devices (incl. CAT IV)					
Ribbon-cutting ceremony					

Table 3

COTR Checklist Items for Coordination with NAVFAC	Point of Contact	Due Date	Actual Complete Date	COTR Initials	Notes
Client walk-thru prior to pre-final inspections, if appropriate					
Schedule client satisfaction post BOD follow-up					
Schedule Government inspections of specialized equipment (e.g., Boiler/pressure vessels, elevators, UPS, SCIF shielding requirements, medical certifications, generators/switchgear)					
Provide keying plan to contractor					
Confirm utilities availability for final connections by contractor					
Startup utilities					
Mechanical Acceptance					
Resolve contract modifications & requests for equitable adjustment					
Contractor final release					
Return unobligated funds					
Process final payment					
Process recycled/recovered materials report					
Closeout actions on construction permits (e.g., NPDES)					
A-E and Construction Contractor Evaluations (ACASS/CCASS)					
Contractor QC Evaluation					
Complete Installed Property List and DD 1354					
Sign & provide Interim DD1354 to activity Real Property Accountability Officer NLT BOD					

Performance Assessment Plan
MONTHLY EVALUATION

MONTH: _____YEAR:_____

Evaluation Factor	Yes	No	N/A	Comments
Experience of Personnel 1. Did the team identified in the proposal actively participate in the project? 2. If personnel substitutions were needed, was the degree of technical competence maintained?				
Working Relationships 1. Did the Construction team participate in the design process (i.e. attend meetings, provide insight, etc.)? Were the coordination meetings between Construction and Design team personnel documented? 2. Did the Design team participate in the construction process (i.e. attend CQC meetings, perform field oversight, etc.)? Were coordination meetings between Construction and Design team personnel documented? 3. Did the collaboration between the Construction and Design Team deliver a high value innovative facility? - Were Total Operating Cost minimized - What LEED points can be obtained - Was energy efficiency optimized, and the energy goals exceeded. 4. Was the budget management process clear; was an estimate submitted on time with each design submittal. Was the estimate updated to reflect the changes in the design submittal? 5. Did the Contractor's team effectively manage the project budget and the User's requirements to meet the customer's needs? Was project budget and emphasis in cost control exhibited in the estimate? (Contractor to document in comments block				

materials/systems innovations and provision of higher quality than required in the RFP Part 4) *Additional factors to be developed during Partnering.*				
Quality Control 1. Were re-submittals of design deliverables or construction rework required this month? 2. Were as built redlines updated this month? *Additional factors to be developed during Partnering.*				
Timely Performance 1. Is the Contractor on schedule? 2. Is the Contractor maintaining the schedule? (Can the Government confirm the project is on schedule?) 3. Is the Contractor following his schedule? *Additional factors to be developed during Partnering.*				
Effectiveness of Management 1. Did the Government need to intercede in resolving a subcontractor issue? *Additional factors to be developed during Partnering.*				
Compliance with Labor Standards 1. Did payrolls have to be resubmitted this month due to inaccuracies or errors? *Additional factors to be developed during Partnering.*				
Compliance with Safety Standards 1. Were there any lost time accidents this month?				

Additional factors to be developed during Partnering.				

GENERAL PERFORMANCE COMMENTS THIS MONTH:

Concurrence:

CM/ROICC Representative _____Date_____.

Project Manager _____Date_____.

Contractor Representative _____Date_____.

THIS PAGE HAS BEEN INTENTIONALLY LEFT BLANK

SECTION 01 32 17.05 20

NETWORK ANALYSIS SCHEDULES (NAS) FOR DESIGN-BUILD
04/10

PART 1 GENERAL

1.1 DESCRIPTION

The Contractor is responsible for scheduling all design, procurement and construction. A single schedule shall logically incorporate all design and construction for the entire project. Unless otherwise indicated, the contractor may begin construction when design is signed, stamped and submitted to the Government via the Contractor's quality control organization.

Design activities shall include design decision points, design submittal packages, such as site and building, as well as design submittals, such as design development and final design. Review times for design development packages shall be included in the schedule. Refer to Section 01 33 10.05 20 DESIGN SUBMITTAL PROCEDURES for specific requirements.

If Government approval is required for any portion of a final signed and sealed design package prior to construction, that review time shall be included in the schedule. The schedule shall also include times for procurement, Contractor quality control and construction, acceptance testing and training. Refer to Section 01 33 00.05 20 CONSTRUCTION SUBMITTAL PROCEDURES to determine if any items require Government approval prior to construction; if any are required, that submittal review time shall be included in the schedule.

The schedule is a tool to manage the project, both for Contractor and Government activities. It will also be used to measure progress and to evaluate time extensions. If cost-loaded, it will provide the basis for progress payments.

The Contractor shall use the Critical Path Method (CPM) and the Precedence Diagram Method (PDM) to satisfy time and cost applications. For consistency, when scheduling software terminology is used in this specification, the terms in Primavera's scheduling programs are used.

1.2 SUBMITTALS

The use of a "G" following a submittal indicates that a Government approval action is required. Submit the following in accordance with Section 01 33 10.05 20 DESIGN SUBMITTAL PROCEDURES and Section 01 33 00.05 20 CONSTRUCTION SUBMITTAL PROCEDURES, except as modified in this contract.

SD-01 Preconstruction Submittals

Qualifications; G

Design Baseline Network Analysis Schedule (NAS); G

Construction Baseline Network Analysis Schedule (NAS); G

SD-07 Certificates

Monthly Network Analysis Schedule Updates; G

Three-Week Look Ahead Schedule; G

SD-11 Closeout Submittals

As-Built Schedule; G

1.3 SCHEDULE ACCEPTANCE PRIOR TO START OF WORK

Review comments made by the Government on the Contractor's schedule(s) will not relieve the Contractor from compliance with requirements of the Contract Documents. The Contractor is responsible for scheduling, sequencing, and prosecuting the Work to comply with the requirements of the Contract Documents.

The Design Baseline Network Analysis Schedule (NAS) shall be submitted and presented to the Government at the PAK Meeting. The acceptance of a Design Baseline NAS is a condition precedent to processing Contractor's pay request(s) for design activities/items of work.

Only bonds shall be paid prior to acceptance of the Design Baseline Network Analysis Schedule(NAS).

The most current updated design schedule shall accompany each design submittal.

The Contracting Officer and Contractor shall participate in a preliminary meeting(s) to discuss the proposed schedule and requirements of this section prior to the Contractor preparing the Construction Baseline Network Analysis Schedule (NAS).

The acceptance of a Construction Baseline NAS is a condition precedent to:

a. The Contractor starting work on the demolition or construction stage(s) of the contract.

b. Processing Contractor's pay request(s) for construction activities/items of work.

c. Review of any schedule updates

Submittal of the Baseline Network Analysis Schedules, and subsequent schedule updates, shall be understood to be the Contractor's certification that the submitted schedule meets all of the requirements of the Contract Documents, represents the Contractor's plan on how the work shall be accomplished, and accurately reflects the work that has been accomplished and how it was sequenced (as-built logic).

1.4 SOFTWARE

Use the scheduling software Primavera Project Planner (P3)™, Current Version, or Primavera SureTrak™, Current Version, by Primavera Systems, Inc. or current mandated scheduling program. Save files in Concentric P3 or current mandated scheduling program file format, compatible with the Government's version of the scheduling program. Importing data into P3/SureTrak/current mandated scheduling program using data conversion techniques or third party software will be cause for rejection of the submitted schedule.

1.5 QUALIFICATIONS

The designated Scheduler for the project shall have prepared and maintained at least 3 previous schedules of similar size and complexity as this contract using SureTrak/P3 or current mandated scheduling program. A resume outlining the qualifications of the Scheduler shall be submitted for acceptance to the Contracting Officer. Payment will not be processed until an acceptable Scheduler is provided.

1.6 NETWORK SYSTEM FORMAT

The system shall include time scaled logic diagrams and specified reports.

1.6.1 Diagrams

Provide Time-scaled Logic Diagram printed in color on ANSI D size sheets. The diagram shall clearly show activities on the critical path. Include the following information for each activity:

a. Activity ID

b. Activity Description

c. Original Duration in Work Days

d. Remaining duration

e. Percent Complete

f. Early Start Date

g. Early Finish Date

h. Total Float

1.6.2 Schedule Activity Properties and Level of Detail

The NAS shall identify all Design, Government, Construction Quality Management (CQM), Construction activities planned for the project and all other activities that could impact project completion if delayed. Separate activities shall be created for each Phase, Area, Floor Level and Location the activity is occurring. Activity categories included in the schedule are specified below.

With the exception of the Contract Award and Contract Completion Date (CCD) milestone activities, no activity shall be open-ended; each activity shall have predecessor and successor ties. Once an activity exists on the schedule it may not be deleted or renamed to change the scope of the activity and shall not be removed from the schedule logic without approval from the Contracting Officer. The ID number for a deleted activity shall not be re-used for another activity. No more than 20 percent of the activities shall be critical or near critical. Critical is defined as having zero days of Total Float. "Near Critical" is defined as having Total Float of 1 to 14 days. Contractor activities shall be driven by calendars that reflect Saturdays, Sundays and all Federal Holidays as non-work days.

1.6.2.1 Activity Categories

a. Design Activities: Design activities shall include design decision points, design submittal packages, including any critical path submittals for Fast Tracked Phases. Review times for design development packages shall be included in the schedule. Refer to Section 01 33 10.05 20 DESIGN SUBMITTAL PROCEDURES for specific requirements.

b. Procurement Activities: Examples of procurement activities include, but are not limited to; Material/equipment submittal preparation, submittal and approval of material/equipment; material/equipment fabrication and delivery, and material/equipment on-site. As a minimum, separate procurement activities will be provided for critical items, long lead items, items requiring government approval and material/equipment procurement for which payment will be requested in advance of installation. The Contractor shall show each delivery with relationship tie to the Construction Activity specifically for the delivery.

c. Government Activities: Government and other agency activities that could impact progress shall be clearly identified. Government activities include, but are not limited to; Government approved submittal reviews, Government conducted inspections/tests, environmental permit approvals by State regulators, utility outages, Design Start, Construction Start (including Design/Construction Start for each Fast-Track Phase), and delivery of Government Furnished Material/Equipment.

d. Contractor Quality Management (CQM) Activities: CQM Activities shall identify the Preparatory Phase and Initial Phase for each Definable Feature of Work identified in the Contractor's Quality Control Plan. These activities shall be added to each Three-Week Look Ahead Schedule referenced in the paragraph entitled "THREE-WEEK LOOK AHEAD SCHEDULE" and will also be included in each monthly update. The Follow-up Phase will be represented by the Construction Activities in the Baseline Schedule and in the schedule updates.

e. Construction Activities: No on-site construction activity shall have a duration in excess of 20 working days. Separate construction activities shall be created for each Phase, Area, Floor Level and Location where the activity is occurring. Contractor activities shall be driven by calendars that reflect Saturdays, Sundays and all Federal Holidays as non-work days, unless otherwise defined in this contract.

f. Turnover and Closeout Activities: Include a separate section with all items on the "Facility Turnover Checklist" that are applicable to this project. The initial checklist will be provided with the bid documents. As a minimum, this will include all testing, specialized inspection activities, Pre-Final inspection, Punch List Completion, Final Inspection and Acceptance. Add a milestone for the Facility Turnover Planning Meeting at approximately 75% construction contract completion or three to six months prior to Projected Completion Date or Contract Completion Date (CCD), whichever is sooner.

1.6.2.2 Contract Milestones and Constraints

a. Project Start Date Milestones: The Contractor shall include as the first activity on the schedule a start milestone titled "Contract

Award", which shall have a Mandatory Start constraint equal to the Contract Award Date.

b. Projected Completion Date Milestone: The Contractor shall include an unconstrained finish milestone on the schedule titled "Projected Completion". Projected Completion is defined as the point in time the Government would consider the project complete and ready for its intended use. This milestone shall have the Contract Completion (CCD) milestone as its only successor.

c. Contract Completion Date (CCD) Milestone: The Contractor shall include as the last activity on the schedule a finish milestone titled "Contract Completion (CCD)", which shall have a Mandatory Finish constraint equal to the current Contract Completion Date. Calculation of schedule updates shall be such that if the finish of the "Projected Completion" milestone falls after the contract completion date, then negative float will be calculated on the longest path and if the finish of the "Projected Completion" milestone falls before the contract completion date, the float calculation shall reflect positive float on the longest path. The only predecessor to the Contract Completion Date Milestone shall be the Projected Completion milestone.

1.6.2.3 Activity Code

At a minimum, the Contractor shall establish activity codes identified in this specification and 3 additional activity codes identified by the Contracting Officer. Once established, activity codes and values cannot be changed without approval by the Contracting Officer.

a. Phase: All activities shall be assigned a 4-digit code value based on the contract phase it occurs in.

b. Area Code: All activities shall be assigned an area code value identifying the Area in which the activity occurs. Activities shall not belong to more than one area. Area is defined as a distinct space, function or activity category; such as, separate structure(s), sitework, project summary, construction quality management, material/equipment procurement, etc.

c. Work Item: All activities in the project schedule shall be assigned a 4-digit Work Item code value. Examples of Work Item code values include but are not limited to water lines, drain lines, building pad and foundation, slab on grade, walls and columns, suspended slab, roof structure, roofing, exterior finish systems, interior rough-in, and finishes, etc.

d. Location 1: Assign a 4-digit Location 1 code value to activities associated with multistory structures. Code values are used to identify the floor level where an activity is occurring.

e. Location 2: Assign a 4-digit Location 2 code value to all activities to identify the location within an Area, Work Item or Building Level that an activity is occurring.

f. Responsibility Code: All activities in the project schedule shall be identified with the party responsible for completing the task. Activities shall not belong to more than one responsible party.

1.6.2.4 Anticipated Weather Delays

The Contractor shall use the National Oceanic and Atmospheric Administration's (NOAA) historical monthly averages for the NOAA location closest to the project site as the basis for establishing a "Weather Calendar" showing the number of anticipated non-workdays for each month due to adverse weather, Saturdays, Sundays and all Federal Holidays as non-work days.

Assign the Weather Calendar to any activity that could be impacted by adverse weather. The Contracting Officer will issue a modification in accordance with the contract clauses, giving the Contractor a time extension for the difference of days between the anticipated and actual adverse weather delay if the number of actual adverse weather delay days exceeds the number of days anticipated for the month in which the delay occurs and the adverse weather delayed activities critical to contract completion. A lost workday due to weather conditions is defined as a day in which the Contractor cannot work at least 50 percent of the day on the impacted activity.

1.6.2.5 Cost Loading

a. Cost Loading Activities: Costs for incremental design preparation shall be assigned to the respective design phase submittal milestone(s). Material and Equipment Costs for which payment will be requested in advance of installation shall be assigned to their respective procurement activity (i.e., the material/equipment on-site activity). All other construction costs shall be assigned to their respective Construction Activities. The value of inspection/testing activities will not be less than 10 percent of the total costs for Procurement and Construction Activities. Evenly disperse overhead and profit to each activity over the duration of the project.

b. Quantities and Units of Measure: Each cost loaded activity shall have a detailed quantity breakdown and unit of measure.

1.6.3 Schedule Software Settings and Restrictions

a. Activity Constraints: Date/time constraint(s), other than those required by the contract, will not be allowed unless accepted by the Contracting Officer. Identify any constraints proposed and provide an explanation for the purpose of the constraint in the Narrative Report.

b. Default Progress Data Disallowed: Actual Start and Actual Finish dates on the CPM schedule shall match the dates on the Contractor Quality Control and Production Reports.

c. Software Settings: Schedule calculations and Out-of-Sequence progress (if applicable) shall be handled through Retained Logic, not Progress Override. All activity durations and float values will be shown in days. Activity progress will be shown using Remaining Duration. Default activity type will be set to "Task". The project "Must Finish By" date shall be left blank.

1.6.4 Required Tabular Reports

The following reports shall be included with the schedule and update submittals:

a. Log Report: Listing of all changes made between the previous schedule and current updated schedule.

b. Narrative Report: Identify and justify:

1. Progress made in each area of the project.

2. Critical Path.

3. Date/time constraint(s), other than those required by the contract.

4. Changes in the following; added or deleted activities, original and remaining durations for activities that have not started, logic, milestones, planned sequence of operations, critical path, and cost loading.

5. Any decrease in previously reported activity Earned Amount.

6. Pending items and status thereof, including permits, change orders, and time extensions.

7. Status of Contract Completion Date and interim milestones.

8. Current and anticipated delays (describe cause of delay and corrective actions(s)).

9. Description of current and future schedule problem areas.

Each entry in the narrative report will cite the respective Activity ID and Activity Description, the date and reason for the change, and description of the change.

c. Earned Value Report: Listing all activities having a budget amount cost loaded. Compilation of total earnings on the project from notice to proceed to current progress payment request. Group and sort activities as directed by the Contracting Officer. Show current budget, previous physical percent complete, to-date physical percent complete, previous earned value, to-date earned value and cost to complete on the report for each activity.

d. Schedule Variance Control (SVC) Diagram: With each schedule submission, provide a SVC diagram showing:

1. Cash Flow S-Curves indicating planned project cost based on projected early and late activity finish dates.

2. Earned Value to-date.

Revise Cash Flow S-Curves when the contract is modified, or as directed by the Contracting Officer.

1.7 SUBMISSION AND ACCEPTANCE

The Design Baseline NAS shall include detailed design activities, general (summarized) approach for the construction phase(s) of the project and required milestone activities. If the project is being Fast-Tracked or allows Early Start of construction, the Design Baseline Project Schedule shall include all fast-tracked design construction phases, etc., including the required or proposed critical path design submittals within each phase

that shall occur during the duration of the project.

The Contractor shall develop the Construction Baseline Schedule with detailed construction activities as design progresses. If design must be completed and accepted prior to construction, submit the complete design and construction network analysis schedule and obtain acceptance prior to starting construction work. If the project will be Fast-Tracked, each construction stage shall be detailed and built upon the previous Fast-Tracked Baseline Schedule (including any interim updates) and accepted prior to starting that stage of the construction work. Payment for completed work is dependent on an accepted, detailed schedule for that portion of work.

1.7.1 Monthly Network Analysis Schedule Updates

Contractor and Government representatives shall meet at monthly intervals to review and agree on the information presented in the updated project schedule. The submission of an acceptable, updated schedule to the Government is a condition precedent to the processing of the Contractor's pay request. If a Schedule of Prices is the basis for progress payments, it shall be consistent with the logic and activity breakdowns on the progress schedule. If progress payments are based on a cost-loaded schedule, the Contractor and Government shall agree on percentage of payment for each activity progressed during the update period.

Provide the following with each Schedule submittal:

a. Time Scaled Logic Diagram.

b. Reports listed in paragraph entitled "Required Tabular Reports."

c. Data disks containing the project schedule. Include the back-up native .prx/current mandated schedule program files.

1.7.2 As-Built Schedule

As a condition precedent to the release of retention and making final payment, submit an "As-Built Schedule," as the last schedule update showing all activities at 100 percent completion. This schedule shall reflect the exact manner in which the project was actually constructed.

1.8 CONTRACT MODIFICATION

Submit a Time Impact Analysis with each cost and time proposal for a proposed change. Time Impact Analysis (TIA) shall illustrate the influence of each change or delay on the Contract Completion Date or milestones. No time extensions will be granted nor delay damages paid unless a delay occurs which consumes all available Project Float, and extends the Projected Finish beyond the Contract Completion Date.

a. Each TIA shall be in both narrative and schedule form demonstrating the delay impact. The TIA shall identify the predecessors to the new activities and demonstrate the impacts to successor activities. The Contractor shall run the schedule calculations and submit the impacted schedule with the proposal or claim.

b. The TIA schedule submitted with the proposal shall show all activity progress as of the date of the proposal. If the impact to the schedule occurs prior to the proposal submission, the TIA schedule shall be

updated to show all activity progress as of the time of the impact. If the proposed change does not impact the CCD, no TIA shall be required.

c. Submit Data disks containing the TIA schedule. Include the back-up native .prx/current mandated schedule program files.

d. Unless the Contracting Officer requests otherwise, only conformed contract modifications shall be added into the Project NAS.

1.9 FLOAT

Project Float is the length of time between the Contractor's Projected Finish Milestone and the Contract Completion Date Milestone. Project Float available in the schedule, at any time shall not be for the exclusive use of either the Government of the Contractor.

1.10 THREE-WEEK LOOK AHEAD SCHEDULE

The Contractor shall prepare and issue a 3-Week Look Ahead schedule to provide a more detailed day-to-day plan of upcoming work identified on the Project Network Analysis Schedule. The work plans shall be keyed to NAS activity numbers and updated each week to show the planned work for the current and following two-week period. Additionally, include upcoming outages, closures, preparatory meetings, and initial meetings. Identify critical path activities on the Three-Week Look Ahead Schedule. The detail work plans are to be bar chart type schedules, maintained separately from the Project NAS on an electronic spreadsheet program and printed on 8.5 by 11 inch sheets as directed by the Contracting Officer. Activities shall not exceed 5 working days in duration and shall have sufficient level of detail to assign crews, tools and equipment required to complete the work. Three hard copies and one electronic file of the 3-Week Look Ahead Schedule shall be delivered to the Contracting Officer no later than 8 a.m. each Monday and reviewed during the weekly CQC Coordination Meeting.

PART 2 PRODUCTS

Not Used.

PART 3 EXECUTION

Not Used.

-- End of Section --

THIS PAGE HAS BEEN INTENTIONALLY LEFT BLANK

SECTION 01 33 00.05 20

CONSTRUCTION SUBMITTAL PROCEDURES
04/10

PART 1 GENERAL

1.1 RELATED REQUIREMENTS

This section covers construction submittals that are not included in the design submittals. Submit design submittals in accordance with 01 33 10.05 20 DESIGN SUBMITTAL PROCEDURES. When using Unified Facility Guide Specifications (UFGS) sections that reference Section 01 33 00 SUBMITTAL PROCEDURES, change reference to this section, Section 01 33 00.05 20 CONSTRUCTION SUBMITTAL PROCEDURES.

1.2 SUBMITTAL DESCRIPTIONS (SD)

Submittal requirements are specified in Unified Facilities Guide Specifications (UFGS) in Part 2, GENERAL REQUIREMENTS; in references in Part 4 PERFORMANCE TECHNICAL SPECIFICATIONS; and in UFGSs in Part 5, PRESCRIPTIVE SPECIFICATIONS. Submittals that are identified by SD numbers use descriptions of items included in submittal packages and titles as follow:

SD-01 Preconstruction Submittals

Certificates of insurance.
Surety bonds.
List of proposed subcontractors.
List of proposed products.
Construction Progress Schedule.
Submittal register.
Schedule of values.
Health and safety plan.
Work plan.
Quality control and Commissioning plan.
Environmental protection plan.

SD-02 Shop Drawings

Drawings, diagrams and schedules specifically prepared to illustrate some portion of the work.

Diagrams and instructions from a manufacturer or fabricator for use in producing the product and as aids to the Contractor for integrating the product or system into the project.

Drawings prepared by or for the Contractor to show how multiple systems and interdisciplinary work will be coordinated.

SD-03 Product Data

Catalog cuts, illustrations, schedules, diagrams, performance charts, instructions and brochures illustrating size, physical appearance and other characteristics of materials or equipment for some portion of the work.

Samples of warranty language when the contract requires extended product warranties.

SD-04 Samples

Physical examples of materials, equipment or workmanship that illustrate functional and aesthetic characteristics of a material or product and establish standards by which the work can be judged.

Color samples from the manufacturer's standard line (or custom color samples if specified) to be used in selecting or approving colors for the project.

Field samples and mock-ups constructed on the project site establish standards by which the ensuring work can be judged. Includes assemblies or portions of assemblies which are to be incorporated into the project and those which will be removed at conclusion of the work.

SD-05 Design Data

Calculations, mix designs, analyses or other data pertaining to a part of work.

SD-06 Test Reports

Report signed by authorized official of testing laboratory that a material, product or system identical to the material, product or system to be provided has been tested in accord with specified requirements. (Testing must have been within three years of date of contract award for the project.)

Report which includes findings of a test required to be performed by the Contractor on an actual portion of the work or prototype prepared for the project before shipment to job site.

Report which includes finding of a test made at the job site or on sample taken from the job site, on portion of work during or after installation.

Investigation reports.

Daily checklists.

Final acceptance test and operational test procedure.

SD-07 Certificates

Statements signed by responsible officials of manufacturer of product, system or material attesting that product, system or material meets specification requirements. Must be dated after award of project contract and clearly name the project.

Document required of Contractor, or of a supplier, installer or subcontractor through Contractor, the purpose of which is to further quality of orderly progression of a portion of the work by documenting procedures, acceptability of methods or personnel qualifications.

Confined space entry permits.

SD-08 Manufacturer's Instructions

Preprinted material describing installation of a product, system or material, including special notices and Material Safety Data sheets concerning impedances, hazards and safety precautions.

SD-09 Manufacturer's Field Reports

Documentation of the testing and verification actions taken by manufacturer's representative to confirm compliance with manufacturer's standards or instructions.

Factory test reports.

SD-10 Operation and Maintenance Data

Data that is furnished by the manufacturer, or the system provider, to the equipment operating and maintenance personnel. This data is needed by operating and maintenance personnel for the safe and efficient operation, maintenance and repair of the item.

SD-11 Closeout Submittals

Documentation to record compliance with technical or administrative requirements or to establish an administrative mechanism.

Special requirements necessary to properly close out a construction contract. For example, Record Drawings, As-built drawings, DD Form 1354, and Sustainable and Energy Data Record Card. Also, submittal requirements necessary to properly close out a major phase of construction on a multi-phase contract.

1.3 SUBMITTALS

The use of a "G" following a submittal indicates that an approval action is required, either by the Government or by the Contractor's Designer of Record (DOR) or QC Specialist.

Submit the following in accordance with the requirements of this section.

SD-01 Preconstruction Submittals

Submittal Register Format; G

Submittal Register; G

1.3.1 Submittal Register

The submittal register will be prepared during the initial design stages of the project and indicate each design and construction submittal. Maintain an electronic version of the submittal register as work progresses. The DOR must assist the DQC in preparing the submittal register by determining all project submittals that require DOR approval. The Contractor proposed submittal register format must include all types of information pertinent to the submittal process and be approved by the Contracting Officer prior to the first submission.

1.4 CONSTRUCTION QUALITY CONTROL

1.4.1 Contractor Reviewing, Certifying, Approving Authority

The QC organization is responsible for reviewing and certifying that submittals are in compliance with the contract requirements.

In RFP PART 4 PERFORMANCE TECHNICAL SPECIFICATIONS (PTS), there are UFGS specification sections required to be submitted as part of the design submittal. Unless specified otherwise in this section, the Contractor's DOR is the approving authority for submittals listed in these UFGS specifications with a "G" designation, unless the DOR delegates to Contractor Quality Control approval. RFP Part 4 PTS sections also include submittals identified for DOR approval that are not denoted with a "G" designation, these submittals cannot be delegated for Contractor Quality Control approval.

If RFP PART 5 PRESCRIPTIVE SPECIFICATIONS are utilized in this RFP, the Contractor's DOR is the approving authority for submittals listed with a "G" designation, unless the DOR delegates to Contractor Quality Control approval.

DOR shall approve construction submittals that are incorporated in the design submittal prior to being submitted to the Government for design submittal approval. Indicate approval of these construction submittals on the accompanying submittal register for that design package.

Submittal items identified in RFP PARTS 2, 4, and 5 that are not identified with a "G" designation or not designated for DOR approval (in RFP Part 4) are for Contractor Quality Control approval.

Construction submittals that are approved by the DOR or certified by the QC are not required to be submitted to the Government for surveillance, except where specified in paragraph SUBMITTALS RESERVED FOR GOVERNMENT SURVEILLANCE.

Construction submittals not requiring Government approval or surveillance shall be submitted for information.

1.4.2 Submittals Reserved for Government Approval

The Government is the approving authority for submittals with a "G" designation in RFP Part 2 GENERAL REQUIREMENTS, specification sections. Comply with additional Government approval requirements for Environmental submittals, as specified in RFP Part 2, Section 01 57 19.00 20 TEMPORARY ENVIRONMENTAL CONTROLS and 01 57 19.01 20 SUPPLEMENTAL TEMPORARY ENVIRONMENTAL CONTROLS.

In addition to the Government approvals required by RFP Part 2 GENERAL REQUIREMENTS, the following submittals shall be certified by the QC Manager and the DOR, and approved by the Contracting Officer.

a. FIRESTOPPING; All fire protection system submittals; G

b. INTERIOR FIRE ALARM SYSTEM; All fire protection system submittals; G

c. FIRE SUPPRESSION SPRINKLERS; All fire protection system submittals; G

d. BACnet DIRECT DIGITAL CONTROL SYSTEMS FOR HVAC; SD-06 field test report submittals; G

e. HVAC TESTING/ADJUSTING/BALANCING; All submittals; G

f. PAD-MOUNTED TRANSFORMERS; All submittals; G

g. SUBSTATIONS; All submittals; G

h. SWITCHGEAR; All submittals; G

i. ELEVATORS; All submittals; G

1.4.2.1 Scheduling for Government Approved Submittals

Except as specified otherwise, allow review period, beginning when Government receives submittal from the QC organization, of 20 working days for return of submittal to the Contractor. Period of review for submittals with Contracting Officer approval begins when Government receives submittal from QC organization. Period of review for each resubmittal is the same as for initial submittal.

1.4.3 Submittals Reserved for Government Surveillance

Surveillance submittals are approved by the Contractor in accordance with paragraph CONTRACTOR REVIEWING, CERTIFYING, AND APPROVING AUTHORITY, but provide the Government the opportunity to oversee critical project issues.

If during the Government surveillance of construction submittals, items are brought to the Contractor's attention as non-compliant, the Contractor shall correct the submittal and construction to comply with the requirements of the RFP. Stamp surveillance submittals "APPROVED" by the DOR or QC Specialist and "FOR SURVEILLANCE ONLY." Submit the following Government surveillance submittals, prior to starting work for construction submittal items, and after the completion of the work for reports submittals items.

a. Submit fire protection related submittals pertaining to spray-applied fire proofing and fire stopping, exterior fire alarm reporting systems, interior fire alarm & detection systems, and fire suppression systems including fire pumps and standpipe systems.

b. Submit geotechnical related submittals pertaining to the soils investigations (reports and soils analysis), foundations (shallow and deep), pavements structure design, test pile and production pile testing and installation.

c. Submit conveying related submittals pertaining to elevators, escalators, weight handling equipment, lifts, and conveyors.

d. Submit roofing submittals pertaining to materials and systems used to make up the roof system.

e. Submit HVAC Testing, Adjusting, and Balancing required submittals.

f. Submit telecommunications shop drawings, as described in Part 4, D50 ELECTRICAL, for coordination with the NMCI Contractor.

g. Submit Performance Verification and Acceptance Testing submittals listed in the PTS and referenced UFGS.

h. Submit all Interim Special Inspection Reports on a bi-weekly basis until work requiring special inspections is complete. Submit all Structural Observation Reports and the Final Report of Special Inspections.

i. Submit Final LEED Certification Documentation for US Green Building Council Certification.

j. Submit building envelope testing results for air tightness and the Infrared Thermography results if air barrier deficiencies are identified. Actions taken to correct building envelope deficiencies at each location.

1.4.4 Constraints

a. Submittals shall be complete for each definable feature of work; submit components of definable feature interrelated as a system at the same time.

b. Approval of a separate material, product, or component does not imply approval of assembly in which item functions.

1.4.5 Variations

Variations from contract requirements require Government approval and will be considered where advantageous to the Government.

1.4.5.1 Considering Variations

Variations from contract requirements including the solicitation, the accepted proposal, and the final design, require Government approval and will be considered where advantageous to the Government. Variations to the contract requirements must be approved by the Designer of Record prior to submittal to the Government for approval of the Variation.

1.4.6 Contractor's Responsibilities

Ensure no work has begun until submittals for that work have been "approved" or "approved as noted."

1.4.7 QC Organization Responsibilities

Stamp each sheet of each submittal with QC certifying statement or approving statement, except that data submitted in bound volume or on one sheet printed on two sides may be stamped on the front of the first sheet only.

a. When approving authority is Contracting Officer, QC organization will certify submittals, assure proper signatures, and forward to Contracting Officer with the following certifying statement:

"I hereby certify that the (equipment) (material) (article) shown and marked in this submittal is that proposed to be incorporated with contract Number (insert contract number here), is in compliance with the contract

documents, can be installed in the allocated spaces, and is submitted for Government approval.

RFP Part Two Submittals:

Certified by QC Manager _____, Date _____
(QC Manager)

RFP Part Four and Part Five Submittals:

Certified by DOR _____, Date _____

Certified by QC Manager _____, Date _____"

(1) Sign certifying statement or approval statement. The person signing certifying statements shall be QC organization member designated in the approved QC plan. The signatures shall be in original ink. Stamped signatures are not acceptable.

(2) Update submittal register database as submittal actions occur and maintain the submittal register at project site until final acceptance of all work by Contracting Officer.

(3) Retain a copy of approved submittals at project site, including Contractor's copy of approved samples.

b. When the Approving Authority is Designer of Record, the DOR shall approve, professionally stamp, sign, and date submittals. DOR stamp on construction submittals or submission of design documents that include construction submittals indicates DOR approval for construction. QC organization will certify submittals, assure proper signatures, and forward to Contracting Officer with the following certifying statement:

"I hereby certify that the (equipment) (material) (article) shown and marked in this submittal is that proposed to be incorporated with contract Number (insert contract number here), is in compliance with the contract requirements, can be installed in the allocated spaces, and is submitted for DOR approval.

RFP Part Four and Part Five Submittals:

Approved by DOR _____, Date _____

Certified by QC Manager _____, Date _____"

(1) Sign certifying statement or approval statement. The person signing certifying statements shall be QC organization member designated in the approved QC plan. The signatures shall be in original ink. Stamped signatures are not acceptable.

(2) Update submittal register database as submittal actions occur and maintain the submittal register at project site until final acceptance of all work by Contracting Officer.

(3) Send copies of final DOR or QC Specialist approved and signed submittals that are identified in this section for Government surveillance to the Contracting Officer. Stamp copies "For Surveillance Only."

1.4.8 Government's Responsibilities

When approving authority is the Contracting Officer, the Government will:

a. Note date on which submittal was received from QC Manager, on each submittal.

b. Review submittals for compliance with contract documents.

1.4.8.1 Government Actions

Submittals will be returned with one of the following notations:

a. Submittals marked "approved" or "approved as submitted" authorize Contractor to proceed with work covered.

b. A submittal marked "not reviewed" will be returned with an explanation of the reason it was not reviewed.

c. Submittals marked "approved as noted" or "approval except as noted; resubmission not required" authorize Contractor to proceed with work as noted provided Contractor takes no exception to the notations.

d. Submittals marked "revise and resubmit" or "disapproved" indicate submittal is incomplete or does not comply with design concept or requirements of the contract documents and shall be resubmitted with appropriate changes. No work shall proceed for this item until resubmittal is approved.

e. Submittals required for surveillance will be returned only if corrective actions are required.

1.5 FORMAT OF SUBMITTALS

1.5.1 Transmittal Form

Transmit submittals with transmittal form prescribed by Contracting Officer and standard for the project.

1.5.1.1 Combined Design and Construction Submittal Notification

Indicate on the design submissions transmittal form, which construction submittals have been combined with the design documents. Coordinate transmittal form list of combined design and construction submittals with submittal register to indicate DOR approval of all combined submittals.

1.6 QUANTITY OF SUBMITTALS

1.6.1 1.6.1 Quantity of Submittals Reserved for Government Approval

Submit four copies of submittals of shop drawings requiring review and approval by Contracting Officer.

1.6.2 Quantity of Submittals Reserved for Government Surveillance

Submit three copies of submittals specified for surveillance to the Contracting Officer if not electronically submitted. Submit two additional copies of elevator submittals directly to the NAVFAC Elevator Specialist responsible for the NAVFAC elevator certification of the project.

1.6.3 Quantity of Submittals for Information

Submit two copies of submittals for information to the Contracting Officer.

PART 2 PRODUCTS

Not used.

PART 3 EXECUTION

Not used.

-- End of Section --

THIS PAGE HAS BEEN INTENTIONALLY LEFT BLANK

SECTION 01 33 10.05 20

DESIGN SUBMITTAL PROCEDURES
08/10

PART 1 GENERAL

1.1 SUMMARY

This section includes requirements for Contractor-originated design documents and design submittals.

1.2 REFERENCES

The publications listed below form a part of this specification to the extent referenced. The publications are referred to within the text by the basic designation only. The latest version of the publication at time of award shall be used.

U.S. GREEN BUILDING COUNCIL (USGBC)

LEED	(2002; R 2005) Leadership in Energy and Environmental Design(tm) Green Building Rating System for New Construction (LEED-NC)
LEED Reference Guide	(2005) LEED-NC Reference Guide for New Construction

U.S. DEPARTMENT OF DEFENSE (DOD)

UFC 1-200-01	(2007; Change 2 2010) General Building Requirements
UFC 1-300-08	(2009; Change 1 2010) Criteria for Transfer and Acceptance of DoD Real Property
UFC 1-300-09N	Design Procedures
UFC 3-100-10	Architecture
UFC 3-120-10	Interior Design
UFC 3-200-10N	Civil
UFC 3-201-02	Landscape
UFC 3-220-01N	Geotechnical Engineering Procedures for Foundation Design of Buildings and Structures
UFC 3-301-01	(2010) Structural Engineering
UFC 3-400-01	Energy Conservation
UFC 3-400-10N	Mechanical

UFC 3-501-01	Electrical Engineering
UFC 3-600-01	Fire Protection Engineering for Facilities
UFC 3-600-10N	Fire Protection
UFC 3-800-10N	Environmental
UFC 4-030-01	Sustainable Development

1.3 GENERAL DOCUMENTATION REQUIREMENTS

Contractor-originated design documents shall represent a project design that complies with the Request For Proposal (RFP), UFC 1-300-09N and the architectural and engineering discipline UFC's design guidance listed below.

a. UFC 1-200-01

b. UFC 3-100-10

c. UFC 3-120-10

d. UFC 3-200-10N

e. UFC 3-201-02

f. UFC 3-220-01N

g. UFC 3-301-01

h. UFC 3-400-01

i. UFC 3-400-10N

j. UFC 3-501-01

k. UFC 3-600-01

l. UFC 3-600-10N

m. UFC 3-800-10N

n. UFC 4-030-01

1.4 SUBMITTALS

Submit design submittals to the Government for approval. The use of a "G" following a submittal indicates that a Government approval action is required. Submit the following in accordance with this section and Section 01 33 00.05 20 CONSTRUCTION SUBMITTAL PROCEDURES.

SD-01 Preconstruction Submittals

Consolidated RFP Documents; G

Submittal Register; G

SD-04 Samples

Final framed rendering and copies; G

SD-05 Design Data

Design Drawings; G

Specifications; G

Design Analysis; G

Updated Draft DD Form 1354; G

Design Submittals; G

Sustainable Design; G

Project Rendering; G

Facility Recognition Plaque; G

SD-07 Certificates

LEED Green Building Rating System (GBRS); G

LEED Certification; G

SD-11 Closeout Submittals

Record Documents; G

NAVFAC Sustainable and Energy Data Record Card; G

Preliminary Interim DD Form 1354; G

Updated Interim DD Form 1354; G

1.5 DESIGN QUALITY CONTROL

1.5.1 Contractor Reviewing and Certifying Authority

The QC organization is responsible for reviewing and certifying that design submittals are in compliance with the contract requirements.

1.5.2 Government Approving Authority

The Contracting Officer is the approving authority for design submittals.

1.5.3 Designer of Record Certifying Authority

The Designer of Record (DOR), as registered and defined in UFC 1-300-09N, is the design certifying authority. The DOR accepts responsibility for design of work in each respective design discipline, by stamping and approving final construction drawings submitted to the Government approval authority.

1.5.4 Contractor Construction Actions

Upon submission of sealed and signed design documents certified by the DOR, Design Quality Control (DQC) Manager and the Quality Control (QC) Managers, the Contractor may proceed with material and equipment purchases, fabrication and construction of any elements covered by that submittal.

1.5.5 Contractor's Responsibilities

a. Designate a lead licensed architect or engineer to be in responsible charge to coordinate the design effort of the entire project. This lead architect or engineer shall coordinate all design segments of the project to assure consistency of design between design disciplines.

b. With the Designer or Record, verify site information provided in the RFP. In addition, provide additional field investigations and verification of existing site conditions as may be required to support the development of design and construction of the project.

c. Advise Contracting Officer of variations, as required by paragraph "Variations."

d. Provide an updated, cumulative submittal register with each design package that identifies the design and construction submittals required by that design package and previous submittals.

1.5.6 QC Organization Responsibilities

a. Both the CA and the QC Manager must certify design submittals for compliance with the contract documents. The DOR stamp on drawings indicates approval from the DOR.

b. QC organization shall certify submittals forwarded by the Designer of Record (DOR) to the Contracting Officer with the following certifying statement:

"I hereby certify that the (equipment) (material) (article) shown and marked in this submittal is that proposed to be incorporated with Contract Number (insert contract number here), is in compliance with the contract documents, and is submitted for Government approval.

Certified by Design Quality Control (DQC) Manager

_____, Date _____

Certified by QC Manager

_____, Date _____"

c. Sign certifying statement. The persons signing certifying statements shall be the QC organization members designated in the approved QC plan. The signatures shall be in original ink. Stamped signatures are not acceptable.

d. Update submittal register as submittal actions occur and maintain the submittal register at project site until final approval of all

work by Contracting Officer.

e. Retain a copy of approved submittals at project site.

1.5.7 Government Responsibilities

The Government will

a. Note date on which submittal was received from QC manager, on each submittal.

b. Perform a quality assurance (QA) review of submittals. Government will notify Contractor when comments for that design package are posted and ready for Contractor evaluation and resolution.

c. Upon submittal of final design package and resolution of comments by the Contractor, the Government will sign final design package, when approved, and return electronic copy of signed design documents to the Contractor.

1.5.7.1 Actions Possible

Submittals will be returned with one of the following notations:

a. Submittals may be marked "approved."

b. Submittals marked "not reviewed" will indicate submittal has been previously reviewed and approved, is not required, does not have evidence of being reviewed and certified by Contractor, or is not complete. Submittal will be returned with an explanation of the reason it is not reviewed. Resubmit submittals returned for lack of review by Contractor or for being incomplete, with appropriate action, coordination, or change.

c. Submittals marked "revise and resubmit" or "disapproved" indicate submittal is incomplete or does not comply with design concept or requirements of the contract documents and shall be resubmitted with appropriate changes. If work has been started on the unacceptable portion of the design submittal, the Contractor shall propose corrective action. No further work shall proceed until the issue is resolved in a manner satisfactory to the Government.

1.6 DESIGN DRAWINGS

1.6.1 Drawing Standards

Prepare, organize, and present design drawings in accordance with the requirements of UFC 1-300-09N.

Submit all CADD files for the final drawings on CD-ROM disks in AutoCAD 2006 format. Drawing files shall be full files, uncompressed and unzipped.

1.6.2 Naval Facilities (NAVFAC) Engineering Command Drawing Numbers

Number the final Contractor-originated design drawings consecutively with NAVFAC drawing numbers. Determine the total number of sheets required for the complete set of drawings before requesting the NAVFAC drawing numbers from the Contracting Officer.

1.6.3 Seal on Documents

All final Contractor-originated design drawings shall be signed, dated, and bear the seal of the registered architect or the registered engineer of the respective discipline in accordance with UFC 1-300-09N. This seal shall be the seal of the Designer of Record for that drawing, and who is professionally registered for work in that discipline. A principal or authorized licensed or certified employee shall electronically sign and date final drawings and cover sheet, in accordance with UFC 1-300-09N. Application of the electronic seal and signature accepts responsibility for the work shown thereon.

1.6.4 Units of Measure

Utilize English Inch-Pound units of measure on the design documents.

1.7 SPECIFICATIONS

Provide a Contractor-originated design specification that, in conjunction with the drawings, demonstrates compliance with materials, equipment, execution, and field quality control requirements of the RFP. The specified products, equipment, fixtures, devices, and systems submitted by the Contractor and approved by the Contracting Officer shall be used to construct the project. Part 2 Sections and Prescriptive Technical Sections contained in Part 5 of this RFP shall become a part of the Contractor-originated specification without any changes and as provided in the RFP. The specification coversheet shall be prepared and signed by the lead licensed architect or engineer of the project design team. Indicate the Contractor's company name and address on the specification coversheet of each design submittal.

1.7.1 Specifications Format

The use of UFGS sections are required. Organize the specifications using Construction Specification Institute (CSI) Masterformat™. A prescriptive specification is required for all items. Provide specifications to include the following:

a. Cover sheet and table of contents.

b. Specification sections.

1.7.2 Fire Protection Specifications

Specifications pertaining to spray-applied fire proofing and fire stopping, exterior fire alarm reporting systems, interior fire alarm and detection systems, and fire suppression systems, including fire pumps and standpipe systems shall be either prepared by, or reviewed and approved by the Fire Protection Designer of Record (DOR).

1.7.3 Submittal Register

Submit a current submittal register with each design submittal. Provide a cumulative register that identifies the design and construction submittals required by each design package along with previous submittals. The DOR shall assist in developing the submittal register by determining which submittal items are required to be approved by the DOR. To obtain Government approval of the final design package, complete all fields in the submittal register.

1.7.4 Specification Software

Create the project specification using SpecsIntact and submit the final Specification source files in SpecsIntact format.

1.8 DESIGN ANALYSIS

Prepare, organize, and present design analysis in accordance with the requirements of UFC 1-300-09N. The design analysis shall be a presentation of facts to demonstrate the concept of the project is fully understood and the design is based on sound engineering principles. Provide design analyses for each discipline and include the following:

a. Basis of design that includes:

(1) An introductory description of the project concepts that addresses the salient points of the design;

(2) An orderly and comprehensive documentation of criteria and rationale for system selection; and

(3) The identification of any necessary licenses and permits that are anticipated to be required as a part of the design and/or construction process. The "Permits Record of Decision" (PROD) form provided shall be used for recording permits.

b. Code and criteria search shall identify all applicable codes and criteria and highlight specific requirements within these codes and criteria for critical issues in the facility design.

c. Calculations as specified and as needed to support this design.

d. Section titled "Sustainable Design" that addresses sustainable concepts and LEED Rating Analysis Report prepared by a LEED Accredited Professional recognized by the U.S. Green Building Council.

e. Draft and Final NAVFAC Sustainable and Energy Data Record Card (NSEDRC) that documents the energy usage and sustainable features of the building. Refer to Record Documents paragraphs in this section for requirements.

f. Section titled "Antiterrorism" that documents the antiterrorism features.

g. Fall Protection Analysis

1.8.1 Basis of Design Format

The basis of design for each design discipline shall include a cover page indicating the project title and locations, contract number, table of contents, tabbed separations for quick reference, and bound in separate volumes for each design discipline.

1.8.2 Design Calculations

Place the signature and seal of the designer responsible for the work on the cover page of the calculations for the respective design discipline.

1.8.3 Sustainable Design

Integrate sustainable strategies and features into the design to minimize the energy consumption of the facilities; conserve resources; minimize adverse effects to the environment; and improve occupant productivity, health, and comfort to reduce the total cost ownership of the project using a whole building, life cycle approach. In accordance with the Engineering and Construction Bulletin 2008-1 and other directives, the facility and all site features shall be designed and constructed using LEED..

The minimum sustainable design rating level for the project is to achieve LEED Gold. The LEED Reference Guide credits and additional sustainable requirements in Part Three, 2.3.1 Sustainable Design are mandatory unless not applicable due to project scope. The design and construction shall incorporate sustainable design strategies and features to the fullest extent possible, consistent with mission, budget and client requirements. Ensure sustainable strategies and features in the design phase are incorporated in the construction phase.

Information and resources on sustainable design principles and guidelines are explained in the "Whole Building Design Guide" that can be found at www.wbdg.org.

1.8.3.1 LEED Green Building Rating System (GBRS) Submittals - USGBC Certification

Provide copies of the LEED Certification Registration Application and the complete LEED support documentation to the U.S. Green Building Council (USGBC) to obtain the minimum certificate level specified herein.

a. Provide the following information for the Basis of Design:

(1) A completed LEED Project Checklist indicating all LEED Prerequisites and Credits to be implemented into the facility design and total LEED score for the project.

(2) Description of how each LEED Prerequisite and Credit will be achieved.

(3) List of Architects or Engineers from Contractor's Design Team and who on the team is responsible for implementing each LEED Prerequisite and Credit into the facility design.

(4) Identify the Design Team's USGBC LEED Accredited Professionals.

b. For the submission specified, provide the following:

(1) At 35% Design submittal, provide documentation of the LEED Certification Registration Application.

(2) At 100% Design submittal, provide a LEED Project Checklist preliminary LEED documentation, in the form of a three-ring binder, of all LEED Prerequisites and Credits to be obtained as required by the LEED Rating System.

(3) At final design submittal, update the LEED Project Checklist and LEED documentation binder with any changes and include an electronic copy of the LEED documentation.

(4) Within thirty (30) days of Beneficial Occupancy Date, develop and submit the project case study for the U.S. Department of Energy's Federal Energy Management Program "High Performance Federal Buildings Database" (http://www.eere.energy.gov/femp/highperformance/).

(5) Within sixty (60) days after the beneficial Occupancy Date (BOD), submit LEED Certification Registration Application and complete LEED Certification Documentation to USGBC for certification. After LEED certification is obtained, provide the plaque and 5 color copies of the LEED Certification to the Contracting Officer. Mat and frame the original LEED Certification document.

1.8.3.2 Sustainable Designer

The design team shall include at least one LEED Accredited Professional as recognized by U.S. Green Building Council. The LEED Accredited Professional shall have an active role in the design of the facility and be responsible for implementation and documentation of sustainable strategies and materials in the project.

1.8.3.3 EPA Designated Products

Use products that meet or exceed the minimum requirements of this RFP and the EPA guideline standards for recovered content to the maximum practicable extent in the performance of the contract. See www.epa.gov/cpg/products.htm for a list of EPA designated products and a list of manufacturers and suppliers of EPA designated products.

1.8.4 Fall Protection Analysis

Eliminate fall hazards in the facility or if not feasible provide control measures to protect personnel conducting maintenance work after completion of the project. Identify fall hazards in the Basis of Design with the Design Development and Prefinal submittals. The analysis shall describe how fall hazards are considered, eliminated, prevented or controlled to prevent maintenance personnel from exposure to fall hazards while performing work at heights. Refer to RFP Part 2, Section 01 35 26 GOVERNMENTAL SAFETY REQUIREMENTS for fall hazard protection requirements.

1.9 PROJECT RENDERING

Provide a full color rendering of the proposed facility by a company that regularly does this work as a major component of their normal business. Use the final rendering to produce the image for the signboard and the framed photographic copies provided to the Contracting Officer.

1.9.1 Final Framed Rendering and Copies

Provide the final rendering within 30 days of concept design approval. Provide four full size photographic reproduction(s) of the rendering, and three electronic copies in .jpg format on compact disks. Mount the reproductions on acid free board, matted, with metal frames, and utilizing non-glare glass. Print the project name, location, and Architect/Engineer/Contractor firm's name on the matting.

Ship the photographic copies, and the CD's in resilient packaging to ensure damage-free delivery.

Deliver one photographic reproduction and one CD to:

Code OPQC, Marine Corps North Carolina IPT
9742 Maryland Avenue
Norfolk, Virginia 23511-3095

Deliver three photographic reproductions and two CDs to:

IDD Installation Development Division/Facility Planning Branch
Bldg 12, Marine Corps Base
PSC Box 20004
Camp Lejeune, NC 28542-0004
Phone (910) 451-1833

1.10 Facility Recognition Plaque

Provide a facility recognition plaque for this facility in accordance with UFC 1-300-09N, Design Procedures.

1.11 RECORD DOCUMENTS

1.11.1 Record Drawings

The as-built modifications shall be accomplished by electronic drafting methods on the Contractor-originated .DWG design drawings to create a complete set of record drawings.

a. For each record drawing, provide CADD drawing identical to signed Contractor-originated .PDF drawings, that incorporates modifications to the as-built conditions. In addition, copy initials and dates from the Contracting Officer approved .PDF documents to the title block of the record CADD.DWG drawings. The RFP reference or definitive drawings are not required for inclusion in the record set of drawings.

b. After all as-built conditions are recorded on the CADD.DWG files, produce a PDF and.TIF file of each individual record drawing in conformance with UFC 1-300-09N. Electronic signatures are not required on record drawings.

1.11.2 Source Documents

Provide the specifications, design analysis, reports, surveys, calculations, and any other contracted documents on the CD-ROM disk with the record drawings.

1.11.3 NAVFAC Sustainable and Energy Data Record Card

Submit the NAVFAC Sustainable and Energy Data Record Card (NSEDRC) to document the energy usage and sustainable features of the facility. Follow the instructions provided and fill in the blank editable Adobe .PDF form available on the Whole Building Design Guide at the following web address: http://www.wbdg.org/references/pa_dod_sust_contract.php . Prepare the following submissions;

a. Draft submission. As a part of the Final Design submission the DOR shall complete the NSEDRC and include it as part of the Design Analysis and submit to the Contracting Officer for approval.

b. Final Submission. The Contractor and Designer of Record shall complete the electronic file documenting the NSEDRC with final data and provide the Final Submission 60 days prior to the Beneficial Occupancy Date (BOD) of the facility. The Final submission shall update the Draft submission information. Submit to the Contracting Officer for approval.

1.11.4 GEOSPATIAL INFORMATION SYSTEMS (GIS) DELIVERABLES

Provide geospatial data and documents for all features added, demolished or modified as part of this project in accordance with Section 01 78 30.00 22 DIGITAL DATA DELIVERABLES (GIS).

1.12 REAL PROPERTY RECORD

DD Form 1354 "Transfer and Acceptance of Military Real Property" is utilized to record and maintain the Base's real property inventory and to manage capital improvements costs.

A Draft DD Form 1354 is attached to this section. Note: The Draft DD Form 1354 will not contain cost or quantity information. The Contractor shall provide this information based on "as constructed" conditions.

The DOR shall provide an Updated Draft DD Form 1354 with each prefinal and final design submittal. Each Updated Draft DD Form 1354 shall incorporate revisions as required based on review comments and the project design. Projected "as constructed" Contractor data including units of measure, quantities, costs, etc. should be added as it becomes available. Data shall be revised to reflect "as constructed" conditions as the project proceeds to completion.

The DD Form 1354 shall be prepared in accordance with UFC 1-300-08, available at http://www.wbdg.org/ccb/browse_cat.php?o=29&c=4.

Near the completion of the project, but a minimum of 60 days prior to the projected Beneficial Occupancy Date (BOD), update the Draft DD Form 1354 and submit a Preliminary Interim DD Form 1354, accounting for all installed property. Required data will include costs, quantities, units of measure, etc. as indicated on the DD Form 1354. Include any additional assets/improvements/alterations from the Draft DD Form 1354. An Excel version of this document can be provided by the Government for use in providing this data. Contact the Contracting Officer for any project specific information necessary to complete the DD Form 1354.

Submit an Updated Interim DD Form 1354 for approval with the Final Invoice. The Updated Interim DD Form 1354 shall address all requested revisions to the Preliminary Interim DD Form 1354 and shall be updated to contain Contractor's "Final" quantity and cost information.

The Final DD Form 1354 will be prepared by the Activity Real Property Accountability Officer (RPAO) at final project closeout after all outstanding issues have been resolved. The Final DD Form 1354 will be prepared using the Contractor provided project data.

1.12.1 MCAS Cherry Point

Point of Contact (POC) for assistance in completing the DD Form 1354:

Facilities Planner
MCAS Facilities Development Department
163 Curtis Road
MCAS Cherry Point, NC 28533
Phone: (252) 466-4771

Coordinate with Section 01 20 00.05 20 PRICE AND PAYMENT PROCEDURES FOR DESIGN-BUILD paragraph "EARNED VALUE REPORT".

The Contractor's Earned Value Report shall allocate the total cost of construction to the appropriate category codes. If a supporting facility feature has a unique category code, it shall be listed separately on the DD Form 1354. If a supporting facility does not have a unique category code the costs associated with the feature shall be included in the primary facility cost.

When documenting demolition work, the DD Form 1354 shall list the quantitative data associated with this work as a negative value to show the costs should be deleted from the Navy Asset Data Store. Coordinate with the POCs listed above in determining the negative value for demolition work.

The Contractor shall complete DD Form 1354 to the satisfaction of the Facilities Development Department of MCAS Cherry Point.

PART 2 PRODUCTS

2.1 CONSOLIDATED RFP DOCUMENTS

Within four weeks after contract award, provide three electronic and hard copies of a consolidated RFP documents incorporating the Contractor's Proposal and all RFP amendments and revisions that are contained in the contract award. Identify the changes to the RFP with the "Red-Lining" or "Track Changes" feature of SpecsIntact or MS Word to highlight the pre-award modifications to the contract. Identify the amendment source at each addition and deletion by annotation, such as footnote or reference in parenthesis.

Submit the specification with the "Redlining/Change" indicated at the Prefinal (100%) submittal; submit the specifications with the changes incorporated, without redlines showing at the Final Design Submittal.

2.2 DESIGN SUBMITTALS

Complete the Contractor-originated design submittals as defined by this contract, and coordinate with the approved design network analysis schedule.

2.2.1 Design Submittal Packages

The Government prefers to review for Quality Assurance (QA) as few submittal packages as possible. Site and Building Design Submittal Packages are required, however Early Start Design Submittals are acceptable if they are substantiated as having an impact to the critical path in the Government approved Network Analysis Schedule. An Early Start submittal shall include all design analyses, drawings, specifications and product data required to fully describe the project element for Government review.

Upon acceptable resolution of Government QA comments for Final Early Start submittals, the Early Start Design will be released to the Contractor for construction. Release of Early Start submittals does not imply final

government approval of the design. Upon acceptable resoution of Government QA comments for all Final Design submittals, the entire design package will be released to the Contractor for construction. The Contractor is responsible for cooordinating all design submittals, and is responsible for any changes that may occur between the Final Early Start acceptance and Final Design.

The Site Design may be submitted as an Early Design Submittal Package and shall include the following components:

a. Master Site Plan

b. Demolition Plan

c. Geotechnical

d. Site Work including Environmental, water, sewer, storm drainage, erosion and sediment control, and electrical and mechanical utilities.

The remaining elements, including foundations, structural systems, building enclosures, interior electrical and mechanical systems, remaining work and furniture/equipment (as applicable) shall be provided in the Building Design Submittal Package.

2.2.2 Required Design Submittals

Provide the following Design Submittal packages. Provide comprehensive, multi-discipline design packages that include design documentation for project elements, fully developed to the design stage indicated, and in accordance with UFC 1-300-09N, except where specified otherwise.

a. Concept Design presented at Concept Design Workshop approximately 20% to 30% design.

b. Early Start Design (approximately 70% to 90% design, provide red-lined specifications) and Building Design Development (35%-50% design) - Government QA. 21 calendar day Government review time.

c. Final Site Design (include final specifications) and Prefinal Building Design (provide red-lined specifications)- Government QA. 21 calendar day Government review time.

d. Final Building Design (Complete, ready for Construction. Proivde specifications with changes incorporated). - 14 calendar day Government review time. Government QA

2.2.3 Review Copies of Design Submittal Packages

a. Provide copies of each design submittal package for review to the following reviewers. Addresses for mailing will be furnished at the PAK meeting.

(1) 9 paper copies of half-size (11" X 17") design drawings only plus 3 CD copies of the complete submittal to the NAVFAC component (Marine Corps, North Carolina IPT, Code OPQC.

(2) 4 paper copies plus 2 CD copies to the Resident Officer in Charge of Construction.

(3) 5 copies plus 2 CD copies to the Activity POC (IDD) (2 copies plus 1 CD copy for final design submittal.)

(4) 1 paper copy plus 1 CD copy to:
USMC: (100% plans only)
Headquarters, U.S. Marine Corps
Security Division, Attn: PhySec Chief
Pentagon, Room 4A324
Washington, DC 20380-1775
(703) 692-4333/4496

(5) 1 paper copy plus 1 CD copy to:
SPAWAR Charleston: (35% to 100% plans)
Commanding Officer
Space and Naval Warfare Systems Center Charleston
ATTN: Code 74M/Steven Leya
P.O. Box 190022
North Charleston, SC 29419-9022
(843) 218-4490

b. Provide the same quantities of copies for resubmittals, as required for each design submittal.

2.3 IDENTIFICATION OF DESIGN SUBMITTALS

Provide a title sheet to clearly identify each submittal, the completion status, and the date. The title sheet shall use the standard format indicated in the UFC 1-300-09N for title sheets. The title sheet shall be unique to a particular design submittal. Submit the project title sheet with design status and date for the design submittals.

2.3.1 Early Start Submittal Title Sheet

Identify Early Start submittals as such, and include a title sheet indicating the type of Early Start submittal, the status, and the date.

PART 3 EXECUTION

3.1 CONTRACTOR'S RESOLUTION OF COMMENTS

Provide written responses to all written comments by the Government. Resubmittal of an unacceptable design submittal shall be a complete package that includes all the required, specified components of that design submittal. **Government required resubmittal due to nonconformance to the contract is not a delay in the contract.**

3.2 VARIATIONS

Variations from contract requirements require Government approval and will be considered where advantageous to the Government. The Designer of Record must approve any proposed variation prior to submittal to the Government.

3.3 THE CONTRACT AND ORDER OF PRECEDENCE

3.3.1 Contract Components

The contract consists of the solicitation, the approved proposal, and the final design.

3.3.2 Order of Precedence

NFAS Clause 5252.236-9312. In the event of a conflict or inconsistency between any of the below described portions of the conformed contract, precedence shall be given in the following order:

a. Any portions of the proposal or final design that exceed the requirements of the solicitation.

(1) Any portion of the approved proposal that exceeds the final design.

(2) Any portion of the final design that exceeds the proposal.

(3) Where portions within either the proposal or the final design conflict, the portion that most exceeds the requirements of the solicitation has precedence.

b. The requirements of the solicitation, in descending order of precedence:

(1) Standard Form 1442, Price Schedule, and Davis Bacon Wage Rates.

(2) Part 1 - Contract Clauses.

(3) Part 2 - General Requirements.

(4) Part 3 - Project Program Requirements.

(5) Part 6 - Attachments (excluding Concept Drawings).

(6) Part 5 - Prescriptive Specifications exclusive of performance specifications.

(7) Part 4 - Performance Specifications exclusive of prescriptive specifications.

(8) Part 6 - Attachments (Concept Drawings).

3.3.2.1 Government Review or Approval

Government review or approval of any portion of the proposal or final design shall not relieve the Contractor from responsibility for errors or omissions with respect thereto.

-- End of Section --

THIS PAGE HAS BEEN INTENTIONALLY LEFT BLANK

SUBMITTAL REGISTER

CONTRACT NO.
796444

TITLE AND LOCATION
BACHELOR ENLISTED QUARTERS

CONTRACTOR

ACTIVITY NO	TRANSMITTAL NO	SPEC SECT	DESCRIPTION ITEM SUBMITTED	PARAG # RAPH	CLASSIFICATION	GOVT OR A/E REVWR	CONTRACTOR: SCHEDULE DATES			CONTRACTOR ACTION			APPROVING AUTHORITY					MAILED TO CONTR/ DATE RCD FRM APPR AUTH	REMARKS
							SUBMIT	APPROVAL NEEDED BY	MATERIAL NEEDED BY	ACTION CODE	DATE OF ACTION	DATE FWD TO APPR AUTH/ DATE RCD FROM CONTR	DATE FWD TO OTHER REVIEWER	DATE RCD FROM OTH REVIEWER	ACTION CODE	DATE OF ACTION		
(a)	(b)	(c)	(d)	(e)	(f)		(g)	(h)	(i)	(j)	(k)	(l)	(m)	(n)	(o)	(p)		(q)	(r)
		01 14 00.05 20	SD-01 Preconstruction Submittals																
			List of contact personnel	1.3.1.1	G														
		01 20 00.05 20	SD-01 Preconstruction Submittals																
			EARNED VALUE REPORT	1.3	G														
		01 31 19.05 20	SD-01 Preconstruction Submittals																
			Project Schedule	1.6	G														
			Performance Assessment Plan	1.5	G														
			(PAP)																
		01 32 17.05 20	SD-01 Preconstruction Submittals																
			Qualifications	1.5	G														
			Design Baseline Network	1.3	G														
			Analysis Schedule (NAS)																
			Construction Baseline Network	1.3	G														
			Analysis Schedule (NAS)																
			SD-07 Certificates																
			Monthly Network Analysis	1.7.1	G														
			Schedule Updates																
			Three-Week Look Ahead	1.10	G														
			Schedule																
			SD-11 Closeout Submittals																
			As-Built Schedule	1.7.2	G														
		01 33 00.05 20	SD-01 Preconstruction Submittals																
			Submittal Register Format	1.3.1	G														
			Submittal Register	1.4.7	G														
		01 33 10.05 20	SD-01 Preconstruction Submittals																
			Consolidated RFP Documents	2.1	G														

SUBMITTAL REGISTER

CONTRACT NO. 796444

TITLE AND LOCATION: BACHELOR ENLISTED QUARTERS

CONTRACTOR:

ACTIVITY NO	TRANSMITTAL NO	SPEC SECT	DESCRIPTION ITEM SUBMITTED	PARAG # PARAGRAPH	CLASSIFICATION	GOVT OR A/E REVWR	CONTRACTOR: SCHEDULE DATES			CONTRACTOR ACTION			APPROVING AUTHORITY					MAILED TO CONTR/ DATE RCD FRM APPR AUTH	REMARKS
							SUBMIT	APPROVAL NEEDED BY	MATERIAL NEEDED BY	ACTION CODE	DATE OF ACTION	DATE FWD TO APPR AUTH/ DATE RCD FROM CONTR	DATE FWD TO OTHER REVIEWER	DATE RCD FROM OTH REVIEWER	ACTION CODE	DATE OF ACTION			
(a)	(b)	(c)	(d)	(e)	(f)		(g)	(h)	(i)	(j)	(k)	(l)	(m)	(n)	(o)	(p)		(q)	(r)
		01 33 10.05 20	Submittal Register	1.7.3	G														
			SD-04 Samples																
			Final framed rendering	1.9.1	G														
			SD-05 Design Data																
			Design Drawings	1.6	G														
			Specifications	1.7	G														
			Design Analysis	1.8	G														
			Updated Draft DD Form 1354	1.12	G														
			Design Submittals	2.2	G														
			Sustainable Design	1.8	G														
			Project Rendering	1.9	G														
			Facility Recognition Plaque	1.10	G														
			SD-07 Certificates																
			LEED Green Building Rating	1.8.3.1	G														
			System (GBRS)																
			LEED Certification	1.8.3.1	G														
			SD-11 Closeout Submittals																
			Record Documents	1.11	G														
			NAVFAC Sustainable and Energy	1.11.3	G														
			Data Record Card																
			Preliminary Interim DD Form	1.12	G														
			1354																
			Updated Interim DD Form 1354	1.12	G														
		01 33 29	SD-01 Preconstruction Submittals																
			LEED Implementation Plan	1.4	G														
			SD-11 Closeout Submittals																

SUBMITTAL REGISTER

CONTRACT NO.
796444

TITLE AND LOCATION
BACHELOR ENLISTED QUARTERS

CONTRACTOR

ACTIVITY NO	TRANSMITTAL NO	SPEC SECT	DESCRIPTION ITEM SUBMITTED	PARAG # RAPH	CLASSIFICATION GOVT OR A/E REVWR	CONTRACTOR: SCHEDULE DATES			CONTRACTOR ACTION			APPROVING AUTHORITY				MAILED TO CONTR/ DATE RCD FRM APPR AUTH	REMARKS
						SUBMIT	APPROVAL NEEDED BY	MATERIAL NEEDED BY	ACTION CODE	DATE OF ACTION	DATE FWD TO APPR AUTH/ DATE RCD FROM CONTR	DATE FWD TO OTHER REVIEWER	DATE RCD FROM OTH REVIEWER	ACTION CODE	DATE OF ACTION		
(a)	(b)	(c)	(d)	(e)	(f)	(g)	(h)	(i)	(j)	(k)	(l)	(m)	(n)	(o)	(p)	(q)	(r)
		01 33 29	LEED Documentation Notebook	1.5	G												
		01 35 13	SD-01 Preconstruction Submittals														
			Heavy Equipment and Vehicle List	3.1.2													
			Existing Conditions Survey	3.1.2													
			Construction Operations Plan	3.1.2													
			Safety Plan	3.1.2													
			Schedule of Work	3.1.2													
			Watercraft list	3.2													
			SD-04 Samples														
			Model Unit	3.3.3													
		01 35 26	SD-01 Preconstruction Submittals														
			Accident Prevention Plan (APP)	1.7	G A												
			Activity Hazard Analysis (AHA)	1.8	G A												
			Crane Critical Lift Plan	1.7.1	G A												
			Crane Operators	1.6.1.3	G A												
			SD-06 Test Reports														
			Reports	1.12													
			Accident Reports	1.12.1													
			Crane Reports	1.12.3													
			Arc Flash Risk/Hazard Analysis	3.9.2	G												
			SD-07 Certificates														
			Confined Space Entry Permit	1.9													
			Hot work permit	1.9													
			Arc Flash Risk/Hazard Analysis Qualifications	3.9.3	G												

SUBMITTAL REGISTER

CONTRACT NO. 796444

TITLE AND LOCATION: BACHELOR ENLISTED QUARTERS

CONTRACTOR:

ACTIVITY NO	TRANSMITTAL NO	SPEC SECT	DESCRIPTION ITEM SUBMITTED	PARAG # RAPH	CLASSIFICATION	GOVT OR A/E REVWR	CONTRACTOR: SCHEDULE DATES			CONTRACTOR ACTION			APPROVING AUTHORITY						
							SUBMIT	APPROVAL NEEDED BY	MATERIAL NEEDED BY	ACTION CODE	DATE OF ACTION	DATE FWD TO APPR AUTH/ DATE RCD FROM CONTR	DATE FWD TO OTHER REVIEWER	DATE RCD FROM OTH REVIEWER	ACTION CODE	DATE OF ACTION	MAILED TO CONTR/ DATE RCD FRM APPR AUTH	REMARKS
(a)	(b)	(c)	(d)	(e)	(f)		(g)	(h)	(i)	(j)	(k)	(l)	(m)	(n)	(o)	(p)	(q)	(r)
		01 35 26	Contractor Electrical Energized	3.9.4	G													
			Work Permit															
			Contractor Safety Self-Evaluation	1.4	G	A												
			Checklist															
		01 45 00.05 20	SD-01 Preconstruction Submittals															
			Design Quality Control (DQC)	1.3.1	G													
			Plan															
			Construction Quality Control	1.3.1	G													
			(CQC) Plan															
			Commissioning Plan	1.3.2	G													
			SD-06 Test Reports															
			Acceptance Testing of Critical	1.3.2														
			Systems Checklist															
			SD-07 Certificates															
			Preliminary Inspections and Final	1.4.3.1	G													
			Acceptance Testing															
			Final Life Safety/Fire Protection	1.4.3.1	G													
			Certification															
			IBC Special Inspections	1.4.3.3	G													
			Certification															
			SD-11 Closeout Submittals															
			Summary Commissioning Report	1.3.3														
		01 50 00.05 20	SD-01 Preconstruction Submittals															
			Traffic control plan	1.8.1	G													
			SD-06 Test Reports															
			Backflow Preventer Tests	3.3	G													

SUBMITTAL REGISTER

CONTRACT NO.
796444

TITLE AND LOCATION
BACHELOR ENLISTED QUARTERS

CONTRACTOR

ACTIVITY NO	TRANSMITTAL NO	SPEC SECT	DESCRIPTION ITEM SUBMITTED	PARAG # RAPH	CLASSIFICATION	GOVT OR A/E REVWR	CONTRACTOR: SCHEDULE DATES			CONTRACTOR ACTION			APPROVING AUTHORITY					MAILED TO CONTR/ DATE RCD FRM APPR AUTH	REMARKS
							SUBMIT	APPROVAL NEEDED BY	MATERIAL NEEDED BY	ACTION CODE	DATE OF ACTION	DATE FWD TO APPR AUTH/ DATE RCD FROM CONTR	DATE FWD TO OTHER REVIEWER	DATE RCD FROM OTH REVIEWER	ACTION CODE	DATE OF ACTION		
(a)	(b)	(c)	(d)	(e)	(f)		(g)	(h)	(i)	(j)	(k)	(l)	(m)	(n)	(o)	(p)		(q)	(r)
		01 50 00.05 20	SD-07 Certificates																
			Backflow Tester	1.6	G														
			Backflow Preventers	1.4															
		01 57 13.00 22	SD-01 Preconstruction Submittals																
			Construction Sequence Schedule	1.4	G														
			SD-03 Product Data																
			Sediment Fence	2.1															
			Dust Suppressors	2.4															
			Erosion Control Matting	2.6															
			Filter Fabric	2.3.1.2															
		01 57 19.00 20	SD-01 Preconstruction Submittals																
			Preconstruction Survey	1.5.1	G														
			Solid Waste Management Plan and Permit	3.4	G														
			Regulatory Notifications	1.5.2	G														
			Environmental Management Plan	3.1	G														
			Storm Water Pollution Prevention Plan	3.2.2.1	G														
			Air Emissions Source Specification Data	3.2.5	G														
			Dirt and Dust Control Plan	3.14.1															
			Contractor Hazardous Material Inventory Log	3.6	G														
			SD-06 Test Reports																
			Laboratory Analysis	3.13.2.2															

SUBMITTAL REGISTER

CONTRACT NO. 796444

TITLE AND LOCATION: BACHELOR ENLISTED QUARTERS

CONTRACTOR:

ACTIVITY NO	TRANSMITTAL NO	SPEC SECT	DESCRIPTION ITEM SUBMITTED	PARAG # RAPH	CLASSIFICATION	GOVT OR A/E REVWR	CONTRACTOR: SCHEDULE DATES			CONTRACTOR ACTION			APPROVING AUTHORITY					MAILED TO CONTR/ DATE RCD FRM APPR AUTH	REMARKS
							SUBMIT	APPROVAL NEEDED BY	MATERIAL NEEDED BY	ACTION CODE	DATE OF ACTION	DATE FWD TO APPR AUTH/ DATE RCD FROM CONTR	DATE FWD TO OTHER REVIEWER	DATE RCD FROM OTH REVIEWER	ACTION CODE	DATE OF ACTION			
(a)	(b)	(c)	(d)	(e)	(f)		(g)	(h)	(i)	(j)	(k)	(l)	(m)	(n)	(o)	(p)		(q)	(r)
		01 57 19.00 20	Erosion and Sediment Control	3.2.2															
			Inspection Reports																
			Storm Water Inspection Reports	3.2.2															
			for General Permit																
			Contractor 40 CFR employee	1.5.5															
			training records																
			Solid Waste Management Report	3.4.1	G														
			SD-11 Closeout Submittals																
			Storm Water Pollution Prevention	3.2.2.2	G														
			Plan compliance notebook																
			Waste Determination	3.5															
			Documentation																
			Disposal Documentation for	3.6.1															
			Hazardous and Regulated Waste																
			Contractor 40 CFR Employee	1.5.5															
			Training Records																
			Solid Waste Management Permit	3.4															
			Solid Waste Management Report	3.4.1															
			Contractor Hazardous Material	3.6	G														
			Inventory Log																
			Hazardous Waste/Debris	3.13.2															
			Management																
			Regulatory Notifications	1.5.2															
		01 78 24.05 20	SD-06 Test Reports																
			Validation Site Visit and	3.1	G														
			Presentation																

SUBMITTAL REGISTER

CONTRACT NO.
796444

TITLE AND LOCATION
BACHELOR ENLISTED QUARTERS

CONTRACTOR

ACTIVITY NO	TRANSMITTAL NO	SPEC SECT	DESCRIPTION ITEM SUBMITTED	PARAG # RAPH	CLASSIFICATION	GOVT OR A/E REVWR	CONTRACTOR: SCHEDULE DATES			CONTRACTOR ACTION			APPROVING AUTHORITY						
							SUBMIT	APPROVAL NEEDED BY	MATERIAL NEEDED BY	ACTION CODE	DATE OF ACTION	DATE FWD TO APPR AUTH/ DATE RCD FROM CONTR	DATE FWD TO OTHER REVIEWER	DATE RCD FROM OTH REVIEWER	ACTION CODE	DATE OF ACTION	MAILED TO CONTR/ DATE RCD FRM APPR AUTH	REMARKS
(a)	(b)	(c)	(d)	(e)	(f)		(g)	(h)	(i)	(j)	(k)	(l)	(m)	(n)	(o)	(p)	(q)	(r)
		01 78 24.05 20	SD-11 Closeout Submittals															
			Preliminary Submittal	1.4.1	G													
			Prefinal Submittal	1.4.2	G													
			Final Submittal	1.4.3	G													
		01 78 30.00 22	SD-11 Closeout Submittals															
			GIS data deliverables	1.3.2.3	G													
		27 10 00	SD-02 Shop Drawings															
			Telecommunications drawings	1.7.1	G													
			Distribution frames	1.7.2	G													
			SD-03 Product Data															
			Telecommunications cabling	2.3.1	G													
			Patch panels	2.4.4	G													
			Telecommunications	2.6	G													
			outlet/connector assemblies															
			Equipment support frame	2.4.1	G													
			Building protector assemblies	2.4.2	G													
			Connector blocks	2.4.3	G													
			Protector modules	2.4.2.1	G													
			SD-06 Test Reports															
			Telecommunications cabling	3.3.1	G													
			testing															
			Factory reel tests	3.3.1.2	G													
			SD-07 Certificates															
			Telecommunications Contractor	1.7.3.1	G													
			Manufacturer Qualifications	1.7.3.2	G													
			Test plan	1.7.4	G													

SUBMITTAL REGISTER

CONTRACT NO. 796444

TITLE AND LOCATION: BACHELOR ENLISTED QUARTERS

CONTRACTOR:

ACTIVITY NO	TRANSMITTAL NO	SPEC SECT	DESCRIPTION ITEM SUBMITTED	PARAG # RAPH	CLASSIFICATION	GOVT OR A/E REVWR	CONTRACTOR: SCHEDULE DATES			CONTRACTOR ACTION			APPROVING AUTHORITY					MAILED TO CONTR/ DATE RCD FRM APPR AUTH	REMARKS
							SUBMIT	APPROVAL NEEDED BY	MATERIAL NEEDED BY	ACTION CODE	DATE OF ACTION	DATE FWD TO APPR AUTH/ DATE RCD FROM CONTR	DATE FWD TO OTHER REVIEWER	DATE RCD FROM OTH REVIEWER	ACTION CODE	DATE OF ACTION			
(a)	(b)	(c)	(d)	(e)	(f)		(g)	(h)	(i)	(j)	(k)	(l)	(m)	(n)	(o)	(p)		(q)	(r)
		27 10 00	SD-10 Operation and Maintenance																
			Data																
			Telecommunications cabling and	1.7.5	G														
			pathway system																
		33 82 00	SD-02 Shop Drawings																
			Telecommunications Outside	1.6.1.1	G														
			Plant																
			Telecommunications Entrance	1.6.1.2	G														
			Facility Drawings																
			SD-03 Product Data																
			Wire and cable	2.8	G														
			Cable splices, and connectors	2.5	G														
			Closures	2.3	G														
			Building protector assemblies	2.2.1	G														
			Protector modules	2.2.2	G														
			Cross-connect terminal cabinets	2.4	G														
			Spare Parts	1.8.2	G														
			SD-06 Test Reports																
			Pre-installation tests	3.5.1	G														
			Acceptance tests	3.5.2	G														
			Outside Plant Test Plan	1.6.3	G														
			SD-07 Certificates																
			Telecommunications Contractor	1.6.2.1	G														
			Key Personnel	1.6.2.2	G														
			Manufacturer's Qualifications	1.6.2.3	G														
			SD-08 Manufacturer's Instructions																

SUBMITTAL REGISTER

CONTRACT NO. 796444

TITLE AND LOCATION: BACHELOR ENLISTED QUARTERS

CONTRACTOR:

ACTIVITY NO	TRANSMITTAL NO	SPEC SECT	DESCRIPTION ITEM SUBMITTED	PARAGRAPH #	CLASSIFICATION	GOVT OR A/E REVWR	CONTRACTOR: SCHEDULE DATES			CONTRACTOR ACTION			APPROVING AUTHORITY					MAILED TO CONTR/ DATE RCD FRM APPR AUTH	REMARKS
							SUBMIT	APPROVAL NEEDED BY	MATERIAL NEEDED BY	ACTION CODE	DATE OF ACTION	DATE FWD TO APPR AUTH/ DATE RCD FROM CONTR	DATE FWD TO OTHER REVIEWER	DATE RCD FROM OTH REVIEWER	ACTION CODE	DATE OF ACTION			
(a)	(b)	(c)	(d)	(e)	(f)		(g)	(h)	(i)	(j)	(k)	(l)	(m)	(n)	(o)	(p)		(q)	(r)
		33 82 00	Building protector assembly	2.2.1	G														
			installation																
			Cable tensions	3.1.8.1	G														
			Fiber Optic Splices	3.1.10.2	G														
			SD-09 Manufacturer's Field																
			Reports																
			Factory Reel Test Data	2.16.1	G														
			SD-10 Operation and Maintenance																
			Data																
			Telecommunications outside	1.6.1.1	G														
			plant (OSP)																
			SD-11 Closeout Submittals																
			Record Documentation	1.8.1	G														

THIS PAGE HAS BEEN INTENTIONALLY LEFT BLANK

TITLE: BACHELOR ENLISTED QUARTERS, MCAS CHERRY POINT, NC (11P0136)

TRANSFER AND ACCEPTANCE OF MILITARY REAL PROPERTY

Form Approved
OMB No. 0704-0188

The public reporting burden for the collection of information is estimated to average 30 minutes per response, including the time for reviewing instructions, searching existing data sources, gathering and maintaining the data needed and completing and reviewing the collection of information. Send comments regarding this burden estimate or any other aspect of this collection of information, including suggestions for reducing the burden, to the Department of Defense, Executive Services and Communications Directorate (0704-0188). Respondents should be aware that notwithstanding any other provision of law, no person shall be subject to any penalty for failing to comply with a collection of information if it does not display a currently valid OMB control number.

PLEASE DO NOT RETURN YOUR COMPLETED FORM TO THE ABOVE ORGANIZATION

1. FROM (Installation/Activity/District and ZIP Code)	2. DATE PREPARED (YYYYMMDD)	3. PROJECT/JOB NUMBER	4. SERIAL NUMBER	9. TRANSACTION DETAILS
	20100224	P0136		a. ☑ NEW CONST. ☐ EXISTING FAC. ☐ CAPITAL IMP. ☐ OTHER (Specify) b. ☐ PHYS. COM. AVAIL. ☐ BENF/O ☐ PARTIAL BOD ☐ FINANCIAL COM. ☐ OTHER (Specify)
5. TO (Installation/Activity/Service, ZIP Code & INSNO) COMMANDING GENERAL ATTN: PUBLIC WORKS DIVISION MARINE CORPS AIR STATION PSC BOX 8003 CHERRY POINT, NC 28533-0003	6. SITE/INSN0/ NAME	7. CONTRACT NUMBER(S)	8. DRAWING NUMBER(S)	c. ☑ DRAFT ☐ FINAL ☐ INTERIM d. EFFECTIVE DATE (YYYYMMDD)

10. ITEM NO.	11. FACILITY NO.	12. CATEGORY CODE	13. CATCODE DESCRIPTION	14. TYPE	AREA 15. UNIT OF MEAS 1	AREA 16. TOTAL QUANTITY UM 1	OTHER 17. UNIT OF MEAS 2	OTHER 18. TOTAL QUANTITY UM2	19. COST	20. FUND SOURCE	21. FUND ORG	22. INTER-EST CODE	23. ITEM REMARKS
1		13510	COMMUNICATION LINES OTHER THAN TELEPHONE										
2		13520	TELEPHONE LINES										
3		72124	BEQ-1										
4		72124	BEQ-2										
5		75020	PICNIC SHELTER										
6		75057	BASKETBALL COURT										
7		75057	VOLLEYBALL COURT										

a. TRANSFERRED BY (Typed Name and Signature)	d. DATE SIGNED (YYYYMMDD)	25.a. ACCEPTED BY (Typed Name and Signature)	b. DATE SIGNED (YYYYMMDD)
c. TITLE (Area Engr./Base Engr./DPW)		c. TITLE (DPW/RPAO)	26. PROPERTY VOUCHER NUMBER

27. CONSTRUCTION DEFICIENCIES (attach blank sheet for continuations)

THIRD MEASUREMENT =

NOTE: THE ATTACHED SUPPORT FACILITY NUMBERS AND CATCODES ARE NOT ALL INCLUSIVE. THEY ARE LISTED HERE AS A COURTESY ONLY.

28. PROJECT REMARKS (attach blank sheet for continuation)

Height: Width: Length: Regular:

S & A Cost:
Construction Cost:
Subtotal:
Equipment Cost:
Total Project Cost:

DD 1354 Prepared by

INSTRUCTIONS

GENERAL. This form has been designed and issued for use in connection with the transfer of military real property between the military departments and to or from other government agencies. It supersedes ENG Forms 290 and 290B (formerly used by the Army and Air Force) and NAVDOCKS Form 2317 (formerly used by the Navy).

Existing instructions issued by the military departments relative the the preparation of DD Form 1354 are applicable to this revised form to the extent that the various items and columns on the superseded forms have been retained. The military departments may promulgate additional instructions, as appropriate.

For detailed instructions on how to fill out this form, please refer to Unified Facilities Criteria (UFC) 1-300-08, dated 17 December 2003.

SPECIFIC DATA ITEMS.

1. From. Name and address of the transferring agency.

2. Date Prepared. Date of actual preparation. Enter all dates in YYYYMMDD format (Example: March 31, 2004 = 20040331).

3. Project/Job Number. Project number on a DD Form 1354 or Individual Job Order Number.

4. Serial Number. Sequential serial number assigned by the preparing organization. (e.g., 2004-0001).

5. To. Name and address of the receiving installation, activity, and service of the Real Property Accountable Officer (RPAO).

6. Site/INSNO and Name. Site or installation number and site name where the constructed facility is located.

7. Construct Number(s). Contract number(s) for this project.

8. Drawing Number(s). Drawing number(s) or CAD identifier(s) for project components.

9. Transaction Details.

a. Type of Transaction. Mark (X) only one box.

b. When/Event. When or event causing preparation of DD Form 1354. X only one box.

c. Version, Draft, Interim, or Final DD Form 1354. X only one box.

d. Effective Date. Effective date for transaction; start date of depreciation.

10. Item Number. Use a separate item number for each facility, no item number for additional usages.

11. Facility Number. Unique facility number identified in Real Property Inventory.

12. Category Code. The category code describes the facility usage.

13. Catcode Description. The category code name which describes the facility usage.

14. Type. Type of construction. **P** for Permanent; **S** for Semipermanent; **T** for Temporary

15. Area: Unit of Meas 1. Area unit of measure; use SF, SY, AC only

16. Total Quantity UM 1. The total area for the measure identified in Item 15. Use negative numbers for demolition.

17. Other: Unit of Meas 2. Unit of Measure 2 is the capacity or other measurement unit (e.g., LF, MB, EA, etc..).

18. Total Quantity UM 2. The total capacity/other for the measure identified in Item 17.

19. Cost. Cost for each facility; for capital improvements to existing facilities, show amount of increase only.

20. Fund Source. Enter the Fund Source Code for this item, i.e., 01-MILCON, 02-BRAC, 03-O&M, etc.

21. Funding Organization. Enter the code for the organization responsible for replacing this facility at the end of its useful life, i.e., 00-Army Active, 01-Army Reserve, 02-Army National Guard, etc.

22. Interest Code. Enter the code that reflects government interest or ownership in the facility, i.e., 01-Owned by DoD, 02-Owned by Federal Government (non-DoD), etc.

23. Item Remarks. Remarks pertaining only to the item number identified in Item 10; show cost sharing.

24. Statement of Completion. Typed name, signature, title, and date of signature by the responsible transferring individual or agent.

25. Accepted By. Typed name, signature, title, and date of signature by the RPAO or accepting official.

26. Property Voucher Number. Next sequential number assigned by the RPAO in voucher register.

27. Construction Deficiencies. List construction deficiencies in project during contractor turnover inspection.

28. Project Remarks. Project level remarks, continuation of blocks, and used to explain "other" entries in Item 9.

TITLE: BACHELOR ENLISTED QUARTERS, MCAS CHERRY POINT, NC (11P0136)

					AREA		OTHER						
10. ITEM NO.	11. FACILITY NO.	12. CATEGORY CODE	13. CATCODE DESCRIPTION	14. TYPE	15. UNIT OF MEAS 1	16. TOTAL QUANTITY UM 1	17. UNIT OF MEAS 2	18. TOTAL QUANTITY UM2	19. COST	20. FUND SOURCE	21. FUND ORG	22. INTER-EST CODE	23. ITEM REMARKS
8		81220	STREET LIGHTING										
9		81231	OVERHEAD ELECTRICAL DISTRIBUTION LINES										
10		81232	UNDERGROUND ELECTRICAL DISTRIBUTION LINES										
11		81240	PERIMETER SECURITY LIGHTING										
12		83210	SANITARY SEWER										
13		83330	DUMPSTER PAD-BEQ#1										
14		83330	DUMPSTER PAD-BEQ#2										
15		84210	POTABLE WATER DISTRIBUTION LINES										
16		84450	STORMWATER POND										
17		85110	ROADS										
18		85210	PARKING AREA										
19		85220	SIDEWALK / CONCRETE										
20		87110	STORM SEWER										
21		88010	FIRE-ALARM SYSTEM										
22		93310	DEMOLITION										
23													

THIS PAGE HAS BEEN INTENTIONALLY LEFT BLANK

DD Form 1354 Addendum

CLASS 2 PROPERTY RECORD DATA

ACTIVITY UIC: _____DD Form 1354, Item 6
ACTIVITY NAME: _____DD Form 1354, Item 5
SPEC AREA_____
PR NO _____
FACILITY NO: _____DD Form 1354, Item 11

LOCATION GENERAL INFO
COUNTRY: iNFADS fills this based on UIC and Special Area
RPTG-CLMT-UIC _____
ACTION TYPE _____(Acquisition, Capital Improvement, Disposal)
STATE: iNFADS fills this based on UIC and Special Area
COUNTY: iNFADS fills this based on UIC and Special Area
CITY: iNFADS fills this based on UIC and Special Area
FACILITY NAME: _____Completed by gaining installation
MAP GRID: _____Completed by gaining installation
FORMER ACTIVITY UIC: _____DD Form 1354, Item 1, Transfer only
FORMER PR NO.: _____Transfers within Dept of Navy only
FACILITY TYPE: _____Determined by Prime Use Category Code
FAMILY HOUSING INDICATOR: _____ Y/N

MEASUREMENTS
LENGTH_____
WIDTH_____
HEIGHT_____
DEPTH_____
AREA/UM_____
STORIES_____
IRREGULAR_____(Y or N)
ATTIC____ (Y or N)
BASEMENT____(Y or N)
MEZZANINE___(Y or N)
PENTHOUSE____(Y or N)

CONSTRUCTION
YEAR BUILT_____ (New Construction)
YEAR IMPROVED _____ (Capital Improvement)
CURR PROJ NO_____ (Capital Improvement)

DD Form 1354 Addendum

ORIG PROJ NO_____ (New Construction)
CONSTRUCTION TYPE_____(P, S, T, or R)
HERITAGE ASSET DATA –_____ Transfers only

MAINTENANCE
PRIME USE CAT CODE_____ (Largest Category Code for facility on DD Form 1354, Item 12)
MAINT FUND CODE_____ (Supplied by gaining installation)
MAINT RESP_____ (Supplied by gaining installation)
COST REF DOCUMENT NUMBERS: _____DD Form 1354, Item 7

EXCESS / DISPOSAL (DISPOSAL DD FORM 1354 ONLY)
EXCESS ACTION CODE_____
EXCESS ACTION DATE_____
DISPOSAL METHOD_____
DISPOSAL DATE_____
EFD DISPOSAL CONTRACT_____
GSA DISPOSAL CONTRACT_____
DISP CONSOL PR_____

STATUS / UTILIZATION
USER UIC/OG ID_____ (Supplied by gaining installation)
CATEGORY CODE_____ DD Form 1354, Item 12
USE_____(Optional)
AREA/UM_____ DD Form 1354, Items 15 and 16
OTHER/UM_____ DD Form 1354, Items 17 and 18
ALT/UM _____ Must be put in Remarks section of DD Form 1354, where applicable.

SECTION 01 33 29

LEED(TM) DOCUMENTATION
06/10

PART 1 GENERAL

1.1 REFERENCES

The publications listed below form a part of this specification to the extent referenced. The publications are referred to within the text by the basic designation only.

FOREST STEWARDSHIP COUNCIL (FSC)

FSC STD 01 001	(2000) Principles and Criteria for Forest Stewardship

U.S. GREEN BUILDING COUNCIL (USGBC)

LEED	(2002; R 2005) Leadership in Energy and Environmental Design(tm) Green Building Rating System for New Construction (LEED-NC)
LEED Reference Guide	(2005) LEED-NC Reference Guide for New Construction

1.2 SUBMITTALS

Government approval is required for submittals with a "G" designation; submittals not having a "G" designation are for Contractor Quality Control approval. The following shall be submitted in accordance with Section 01 33 00 SUBMITTAL PROCEDURES:

SD-01 Preconstruction Submittals

LEED Implementation Plan; G

SD-11 Closeout Submittals

LEED Documentation Notebook; G

1.3 DESCRIPTION

This project has been designed for, and shall be developed for a sustainable rating of [certified] [silver] [gold] [platinum] in accordance with LEED Version 3.0. Table 1 (see paragraph Table) identifies the LEED credit items that are designed into or otherwise required for this project. No variations or substitutions to the LEED credits identified for this contract shall be allowed without written consent from the Contracting Officer. Should there be a case where there is any problem meeting the full requirements of a LEED credit identified for this project in Table 1, the Contractor must bring this to the attention of the Contracting Officer immediately.

1.3.1 Credit Validation

[This project will not be registered with USGBC for validation of credits earned. Validation of credits earned will be accomplished by the Government. Content of all construction documentation must be in accordance with the LEED Reference Guide requirements for supporting data required and must use LEED Letter Templates, which shall be [provided by the Government][obtained by Contractor at Contractor's expense]. Design phase LEED documentation will be provided separately by others.]

[This project will be registered with USGBC for validation of credits earned. Contractor is not responsible for registering the project with USGBC or for paying project registration fees to USGBC. Format and content of all construction documentation must be in accordance with the LEED Reference Guide requirements for supporting data required in event of USGBC audit of the particular credit. Contractor is required to coordinate through the Contracting Officer with Government's [LEED consultant][Administrative Assistant] on assuring assembled data is acceptable to USGBC and responding to USGBC requests for additional construction data in the course of seeking project certification. Design documentation will be provided by others.]

1.3.2 Contractor Responsibilities

Some LEED credits are inherent in the design provided and require no further submittal or documentation. For these credits, the Contractor notify the Contracting Officer in advance of selection of any specified material or use of any permissible construction methods that may result in a deviation from the LEED designer intent. Some LEED credits involve material selection and are generally identified within the technical sections with the notation "LEED," though not specifically identified in all occurrences. Some LEED credits are dependent on construction practices.

All LEED credits identified in Table 1 not inherent in the design provided shall be documented by the Contractor. Table 1 provides a general summary of applicable credits. Detailed submittal requirements are contained in the LEED Reference Guide and in the technical sections.

In all cases where a material, product, or execution requirement is identified by "LEED" in the contract documents, additional data or certificates shall be submitted with the individual component or process validating the material or component to the respective LEED credit item. These additional data or certificates shall be separable from the other submitted data and a copy shall be included in the LEED Documentation Notebook in addition to the distribution indicated in the submittal register.

1.4 LEED IMPLEMENTATION PLAN

LEED Implementation Plan shall be submitted within [30][_____] days after notice to proceed. The plan, when completed, shall provide a detailed description of all activities that relate to accomplishing project LEED requirements, including construction practices, procurement practices, and proposed submittals and documentation for each LEED credit. Plan shall also include the following:

a. Name of individual[s] on the Contractor's staff responsible for ensuring LEED credits and prerequisites are earned and responsible for assembling documentation. A responsible [individual] [LEED Accredited

Professional] shall be identified [for each applicable credit]. [This individual may fill the role of QC Administrative Assistant specified in Section 01 45 00.00 20 QUALITY CONTROL.]

b. Copy of [proposed] contract with Commissioning Agent.

c. Templates to be used for tracking LEED credits. Listing of documents to be provided for each credit and schedule for their inclusion in LEED Documentation Notebook. Include proposed materials, associated estimated costs, and details necessary for LEED calculations in order to determine if the listed materials can be expected to achieve the project goal.

d. List of all plans required in the technical sections for LEED credit. Proposed submittal date ofr each plan. These shall be added to the LEED Implementation Plan as they are completed.

e. Implementation plan for cumulative materials credits, which shall use applicable template with proposed materials, associated estimated costs, and details necessary for LEED Calculations added in order to determine if the listed materials can be expected to achieve the project goal. Submit cumulative materials implementation plans before materials purchaing begins.

1.5 LEED DOCUMENTATION NOTEBOOK

The Contractor shall prepare a comprehensive notebook documenting compliance for each LEED credit identified in Table 1. LEED Documentation Notebook shall be formatted to match LEED numbering system and tabbed for each credit and prerequisite. LEED documentation in notebook shall contain up to date information through the previous[week's][month's] work, and at least one set shall be available on the jobsite at all times. [The Notebook may be maintained and available for reference electronically if preferred.] Completed pages shall be prevented from being altered. If the Contractor fails to maintain the LEED Documentation Notebook as specified herein, the Contracting Officer will deduct from the monthly progress payment an amount representing the estimated cost of maintaining the Notebook. This monthly deduction will continue until an agreement can be reached between the Contracting Officer and the Contractor regarding the accuracy and completeness of the Notebook. The original, [one copy,] [[_____] copies,] and an electronic version on CD of the notebook shall be submitted at project closeout.

1.5.1 Content

Notebook shall include Table 1, applicable product data for material selection, final calculations, certifications for construction practices, procurement data, cumulative calculations and other items as identified in the approved LEED Implementation Plan. Notebook must contain all required data to support full compliance with the indicated LEED credit. LEED credits that are inherent to the design will be documented by the designer of record.

1.5.2 LEED Calculations

Calculations showing compliance with a required LEED credit identified in Table 1 or within the LEED Implementation Plan. Calculations shall be current and available for monthly review. Final calculations shall be included in the LEED Documentation Notebook under the appropriate tab.

1.5.3 Submittals

All "G" designated submittals required for inclusion in the LEED Documentation Notebook shall be separable from other submitted data and shall be included in the LEED Documentation Notebook in addition to the distribution indicated on the submittal register.

1.6 REQUIREMENTS

LEED credits as identified in Table 1 shall be incorporated and documented as required by the Contract documents and in full compliance with the LEED Reference Guide. LEED credits not identified elsewhere in the Contract documents and those requiring further instruction are specified below. Refer to the LEED Reference Guide for further definitions and requirements.

1.6.1 Materials and Resources Credit 3, Materials Reuse

Project goal is that a minimum of [5][10][_____] percent (by dollar value) of materials and products for the project are salvaged, refurbished, or reused materials and products. The following salvaged, refurbished, and reused materials are specified: [_____]. Contractor shall track cumulative calculations for this credit. [For this credit, performance is measured [for the entire project] [separately for each facility or facility type indicated to achieve this credit in Table 1].]

1.6.2 Materials and Resources Credit 4, Recycled Content

[Not withstanding the requirements of Section 01 62 35 RECYCLED/RECOVERED MATERIALS, Contractor shall select materials so that the sum of post-consumer recycled content value plus one-half of post-industrial recycled content value constitutes at least [10][20][_____] percent of the total materials cost for the project. EPA Comprehensive Procurement Guidelines has a supplier database. California Integrated Waste Management Board (CIWMB) Recycled Content Directory also contains product and supplier data at www.ciwmb.ca.gov/rcp.]
[The following recycled content materials are specified so that the sum of post-consumer recycled content value plus one-half of post-industrial recycled content value constitutes at least [10][20][_____] percent of the total materials cost for the project: [_____].]

1.6.2.1 Calculations

LEED Letter Template forms[provided by Government] shall be used for tracking and documentation. Recycled content value of project materials shall be determined by the method described in the LEED Reference Guide. [For this credit, performance is measured [for the entire project] [separately for each facility/facility type indicated to achieve this credit in Table 1].]

1.6.2.2 Substitutions

In the case of conflict between this requirement and individual technical section requirements, Contractor may submit for Government approval proposed alternative products or systems that provide equivalent performance and appearance and have greater contribution to project recycled content requirements. All such proposed substitutions shall be submitted with the LEED Implementation Plan accompanied by product data

that demonstrates equivalence.

1.6.3 Materials and Resources Credit 5, Regional Materials

[Contractor shall select materials so that a minimum of [10][20][_____] percent (by dollar value) of materials and products for the project are extracted, harvested, or recovered, as well as manufactured, regionally within a 500 mile radius of the project site.]
[The following technical sections include regional material requirements so that, if available, a minimum of [10][20][_____] percent (by dollar value) of materials and products for the project are extracted, harvested, or recovered, as well as manufactured, regionally within a 500 mile radius of the project site: [_____].]

1.6.3.1 Calculations

LEED Letter Template forms[provided by the Government] shall be used for tracking and documentation. Amount of regional project materials shall be determined by the method described in the LEED Reference Guide. [For this credit, performance is measured[for the entire project][separately for each facility/facility type indicated to achieve this credit and Table 1].]

1.6.4 Materials and Resources Credit 6, Rapidly Renewable Materials

A minimum of [2.5][_____] percent (by dollar value) of materials and products for the project shall be rapidly renewable. Rapidly renewable materials are made from plants with a 10-year or shorter harvest cycle. The following rapidly renewable materials are specified: [_____]. Contractor shall track cumulative calculations for this credit. [For this credit, performance is measured [for the entire project] [separately for each facility/facility type indicated to achieve this credit in Table 1].]

1.6.5 Materials and Resources Credit 7, Certified Wood

[Contractor shall select materials so that a minimum of [50][_____] percent (by dollar value) of permanently installed wood-based materials and products for the project are certified in accordance with FSC STD 01 001.]
[The following certified wood materials are specified so that a minimum of [50][_____] percent (by dollar value) of wood-based materials and products for the project are certified in accordance with FSC STD 01 001: [_____].]

1.6.5.1 Calculations

LEED Letter Template forms[provided by the Government] shall be used for tracking and documentation. Amount of FSC-certified project materials shall be determined by the method described in the LEED Reference Guide. [For this credit, performance is measured [for the entire project] [separately for each facility/facility type indicated to achieve this credit in Table 1].]

PART 2 PRODUCTS

Not used.

PART 3 EXECUTION

3.1 COORDINATION MEETINGS

There will be three onsite coordination meetings. The first will be a

preconstruction meeting to review the LEED Implementation Plan. The requirements for this meeting may be fulfilled during the coordination and mutual understanding meeting outlined in Section 01 45 02 NAVFAC QUALITY CONTROL. The second will be a pre-closeout meeting to review LEED Documentation Notebook for completeness and identify any outstanding issues relating to final score and documentation requirements. The third is a closeout meeting to review the final LEED Documentation Notebook. All meetings shall be attended by Contractor's designated individual responsible for LEED documentation, Government representative and Installation representative. At closeout meeting a final score for the project will be determined based on review of project performance and documentation. Contractor shall make a set of contract drawings and specifications available for review at each meeting as well as an updated LEED Documentation Notebook.

3.2 TABLE

LEED credits as identified in Table 1 below are contract requirements and shall be incorporated in full compliance with the LEED Reference Guide.

-- End of Section --

SECTION 01 35 13

SPECIAL PROJECT PROCEDURES
06/10

PART 1 GENERAL

1.1 DEFINITIONS

1.2 SUBMITTALS

Government approval is required for submittals with a "G" designation; submittals not having a "G" designation are for Contractor Quality Control approval. Submit the following in accordance with Section 01 33 00.05 20 CONSTRUCTION SUBMITTAL PROCEDURES:

SD-04 Samples

Model Unit

PART 2 PRODUCTS

NOT USED

PART 3 EXECUTION

3.1 MODEL UNIT

Prior to placement of material orders for components of the BEQ living suites and the installation of those components throughout the project, the Contractor must complete the construction of the components of the model unit, and gain the approval of the Contracting Officer for the materials and workmanship therein.

3.1.1 Model Unit Description

Provide a model unit made up of enough to show all of the different levels of completion required below. The model unit must be living suites constructed at the location agreed upon with the Contracting Officer and a part of the permanent structure as indicated .

3.1.2 Model Unit Requirements

Adhere to the following requirements for model construction:

a. Provide materials in model unit identical to those actually approved in submittals. The QC Manager and Organization must be in place to approve and process submittals in accordance with Section 01 33 00.05 20 CONSTRUCTION SUBMITTAL PROCEDURES. Do not procure, fabricate, or install materials prior to approval by the Contracting Officer.

b. The Contracting Officer retains the right to disapprove and reject materials or items which are not in compliance with the project drawings and specifications.

c. After approval of initial product submittals, provide full size samples of these components in the required color, and in sufficient quantity to completely outfit the model unit. Provide full size samples as

dictated by the construction schedule for installation of those components in the model unit. Do not order or approve production of any materials beyond those required for the model unit, until the full size samples have been installed in the model unit and approved by the Contracting Officer.

d. Proceed immediately with construction of the model unit after the Contracting Officer acknowledges the required product submittals are approved.

e. Provide all temporary utilities and climate control necessary to construct, inspect, approve, and maintain the model unit.

f. Provide and maintain the following throughout the construction period of the entire project: Temporary parking at the model unit; signage from the temporary parking to the model unit; the visual approach to the unit including trash removal, lawn maintenance.

g. Locate the model unit in an easily accessible location for public tours. The Government retains the right to use the model unit for supervised tours and public relations activities following each level of completion. Tours will take place during normal working hours.

h. Prior to completion and approval of the model unit, and with written permission to start from the Contracting Officer, the Contractor may perform general sitework and run major utility lines for the rest of the project.

i. As each model unit's level of completion is approved by the Contracting Officer, construction of that level's components throughout the remainder of the project may proceed.

3.1.3 Model Unit Levels of Completion

Model unit must be exhibited and approved at the following 4 levels of completion:

Levels 3, 4, 5 & 6, model unit must be available for government inspection for 10 calendar days per level.

a. Level 3 (Exterior Shell Level) - Exhibit all exterior finishes, windows and doors with temporary hardware, caulking, sealant, sheathing paper, wall ties, locations of mechanical equipment, roofing, louvers, vents and trim.

b. Level 4 (Plumbing, Mechanical and Electrical rough-in Level) - Exhibit electrical conduit and box location for switches, outlets fixtures, cable and data collection, ductwork, built-in plumbing fixtures, plumbing piping, and water pressure test of all plumbing pipe.

c. Level 5 (Interior Finishes-rough Level) - Exhibit non-veneer plaster, unspackled and uncaulked wall and ceiling finishes, insulation, interior doors, final locations of all outlets and fixtures.

d. Level 6 (Interior Finishes & Fixtures-final Level) - Exhibit final interior finishes, veneer plaster, painting, caulking, built-in shelving, cabinetwork, cabinet supported sinks, final door hardware, mechanical louvers, final electrical equipment connections, electrical fixtures, freestanding bathroom fixtures, properly functioning

appliances, and operation of mechanical and electrical systems.

-- End of Section --

THIS PAGE HAS BEEN INTENTIONALLY LEFT BLANK

SECTION 01 35 26

GOVERNMENTAL SAFETY REQUIREMENTS
06/10

PART 1 GENERAL

1.1 REFERENCES

The publications listed below form a part of this specification to the extent referenced. The publications are referred to within the text by the basic designation only.

AMERICAN NATIONAL STANDARDS INSTITUTE (ANSI) / INTERNATIONAL SAFETY EQUIPMENT ASSOCIATION (ISEA)

ANSI/ISEA 107	(2004) High-Visibility Safety Apparel and Headwear

AMERICAN SOCIETY OF SAFETY ENGINEERS (ASSE/SAFE)

ASSE/SAFE A10.32	(2004) Fall Protection
ASSE/SAFE A10.34	(2001; R 2005) Protection of the Public on or Adjacent to Construction Sites
ASSE/SAFE Z359.1	(2007) Safety Requirements for Personal Fall Arrest Systems, Subsystems and Components
ASSE/SAFE Z87.1	(2003) Standard for Occupational and Educational Eye and Face Protection

ASME INTERNATIONAL (ASME)

ASME B30.22	(2005) Articulating Boom Cranes
ASME B30.3	(2009) Tower Cranes
ASME B30.5	(2007) Mobile and Locomotive Cranes
ASME B30.8	(2004) Floating Cranes and Floating Derricks

INSTITUTE OF ELECTRICAL AND ELECTRONICS ENGINEERS (IEEE)

IEEE C2	(2007; TIA 2007-1; TIA 2007-2; TIA 2007-3; TIA 2007-4; TIA 2007-5) National Electrical Safety Code

NATIONAL FIRE PROTECTION ASSOCIATION (NFPA)

NFPA 10	(2010) Standard for Portable Fire Extinguishers
NFPA 241	(2009) Standard for Safeguarding Construction,Alteration, and Demolition Operations

NFPA 51B	(2009) Standard for Fire Prevention During Welding, Cutting, and Other Hot Work
NFPA 70	(2008; AMD 1 2008) National Electrical Code
NFPA 70E	(2009; Errata 09-1) Standard for Electrical Safety in the Workplace

U.S. ARMY CORPS OF ENGINEERS (USACE)

EM 385-1-1	(2008) Safety and Health Requirements Manual

U.S. DEPARTMENT OF DEFENSE (DOD) UNIFIED FACILITIES CRITERIA (UFC)

UFC 3-560-01	(2008; Change 2) Electrical Safety, O & M

U.S. NATIONAL ARCHIVES AND RECORDS ADMINISTRATION (NARA)

29 CFR 1910	Occupational Safety and Health Standards
29 CFR 1910.146	Permit-required Confined Spaces
29 CFR 1915	Confined and Enclosed Spaces and Other Dangerous Atmospheres in Shipyard Employment
29 CFR 1926	Safety and Health Regulations for Construction
29 CFR 1926.500	Fall Protection

U.S. NAVAL FACILITIES ENGINEERING COMMAND (NAVFAC)

ND OPNAVINST 5100.23	(2005; Rev G) Navy Occupational Safety and Health (NAVOSH) Program Manual

1.2 SUBMITTALS

Government approval is required for submittals with a "G" designation; submittals not having a "G" designation are for Contractor Quality Control approval. Submit the following in accordance with Section 01 33 00.05 20 CONSTRUCTION SUBMITTAL PROCEDURES:

Government acceptance is required for submittals with a "G, A" designation.

SD-01 Preconstruction Submittals

Accident Prevention Plan (APP); G, A

Activity Hazard Analysis (AHA); G, A

Crane Critical Lift Plan; G, A

Proof of qualification for Crane Operators; G, A

SD-06 Test Reports

Reports

Submit reports as their incidence occurs, in accordance with the requirements of the paragraph entitled, "Reports."

Accident Reports

Crane Reports

Arc Flash Risk/Hazard Analysis; G

SD-07 Certificates

Confined Space Entry Permit

Hot work permit

Arc Flash Risk/Hazard Analysis Qualifications; G

Contractor Electrical Energized Work Permit; G

Contractor Safety Self-Evaluation Checklist; G, A

Submit one copy of each permit/certificate attached to each Daily Quality Control Report.

1.3 DEFINITIONS

a. Competent Person for Fall Protection. A person who is capable of identifying hazardous or dangerous conditions in the personal fall arrest system or any component thereof, as well as their application and use with related equipment, and has the authority to take prompt corrective measures to eliminate the hazards of falling.

b. High Visibility Accident. Any mishap which may generate publicity and/or high visibility.

c. Medical Treatment. Treatment administered by a physician or by registered professional personnel under the standing orders of a physician. Medical treatment does not include first aid treatment even through provided by a physician or registered personnel.

d. Operating Envelope. The area surrounding any crane. Inside this "envelope" is the crane, the operator, riggers and crane walkers, rigging gear between the hook and the load, the load and the crane's supporting structure (ground, rail, etc.).

e. Qualified Person for Fall Protection. A person with a recognized degree or professional certificate, and with extensive knowledge, training and experience in the field of fall protection; who is capable of performing design, analysis, and evaluation of fall protection systems and equipment.

f. Recordable Injuries or Illnesses. Any work-related injury or illness that results in:

(1) Death, regardless of the time between the injury and death, or the length of the illness;

(2) Days away from work (any time lost after day of injury/illness onset);

(3) Restricted work;

(4) Transfer to another job;

(5) Medical treatment beyond first aid;

(6) Loss of consciousness; or

(7) A significant injury or illness diagnosed by a physician or other licensed health care professional, even if it did not result in (1) through (6) above.

g. "USACE" property and equipment specified in USACE EM 385-1-1 should be interpreted as Government property and equipment.

h. Weight Handling Equipment (WHE) Accident. A WHE accident occurs when any one or more of the six elements in the operating envelope fails to perform correctly during operation, including operation during maintenance or testing resulting in personnel injury or death; material or equipment damage; dropped load; derailment; two-blocking; overload; and/or collision, including unplanned contact between the load, crane, and/or other objects. A dropped load, derailment, two-blocking, overload and collision are considered accidents even though no material damage or injury occurs. A component failure (e.g., motor burnout, gear tooth failure, bearing failure) is not considered an accident solely due to material or equipment damage unless the component failure results in damage to other components (e.g., dropped boom, dropped load, roll over, etc.). Any mishap meeting the criteria described above shall be documented in both the Contractor Significant Incident Report (CSIR) and using the NAVFAC prescribed Navy Crane Center (NCC) form submitted within five days both as provided by the Contracting Officer.

1.4 CONTRACTOR SAFETY SELF-EVALUATION CHECKLIST

Contracting Officer will provide a "Contractor Safety Self-Evaluation checklist" to the Contractor at the pre-construction conference. The checklist will be completed monthly by the Contractor and submitted with each request for payment voucher. Additionally, monthly exposure reporting to the Contracting Officer is required to be attached to the monthly billing request. This report is a compilation of employee-hours worked each month for all site workers, both prime and subcontractor. The Contracting Officer will provide copies of any special forms. An acceptable score of 90 or greater is required. Failure to submit the completed safety self-evaluation checklist or achieve a score of at least 90, will result in a retention of up to 10 percent of the voucher.

1.5 REGULATORY REQUIREMENTS

In addition to the detailed requirements included in the provisions of this contract, comply with the most recent edition of USACE EM 385-1-1, Unified Facilities Criteria (UFC) UFC 3-560-01, NFPA 70E, IEEE C2 and federal, state, and local, laws, ordinances, criteria, rules and regulations. Submit matters of interpretation of standards to the appropriate administrative agency for resolution before starting work. Where the

requirements of this specification, applicable laws, criteria, ordinances, regulations, and referenced documents vary, the most stringent requirements govern.

1.6 SITE QUALIFICATIONS, DUTIES AND MEETINGS

1.6.1 Personnel Qualifications

1.6.1.1 Site Safety and Health Officer (SSHO)

The contractor shall provide a Safety oversight team that includes a minimum of one (1) Competent Person at each project site to function as the Safety and Health Officer (SSHO). The SSHO shall be at the work site at all times, unless specified differently in the contract, to perform safety and occupational health management, surveillance, inspections, and safety enforcement for the Contractor, and their training, experience, and qualifications shall be as required by EM 385-1-1 paragraph 01.A.17 and all associated sub-paragraphs. A Competent Person shall be provided for all of the hazards identified in the Contractor's Safety and Health Program in accordance with the accepted Accident Prevention Plan, and shall be on-site at all times when the work that presents the hazards associated with their professional expertise is being performed. The credentials of the Competent Persons(s) shall be approved by the Contracting Officer in consultation with the Safety Office.

The Contractor Quality Control (QC) person cannot be the SSHO on this project, even though the QC has safety inspection responsibilities as part of the QC duties.

1.6.1.2 Competent Person for Confined Space Entry

Provide a competent person for confined space meeting the definition and requirements of EM 385-1-1.

1.6.1.3 Crane Operators

Meet the crane operators requirements in USACE EM 385-1-1, Section 16 and Appendix I. In addition, for mobile cranes with Original Equipment Manufacturer (OEM) rated capacitates of 50,000 pounds or greater, designate crane operators as qualified by a source that qualifies crane operators (i.e., union, a government agency, or and organization that tests and qualifies crane operators). Provide proof of current qualification.

1.6.2 Personnel Duties

1.6.2.1 Site Safety and Health Officer (SSHO)

a. Conduct daily safety and health inspections and maintain a written log which includes area/operation inspected, date of inspection, identified hazards, recommended corrective actions, estimated and actual dates of corrections. Attach safety inspection logs to the Contractors' daily quality control report.

b. Conduct mishap investigations and complete required reports. Maintain the OSHA Form 300 and Daily Production reports for prime and sub-contractors.

c. Maintain applicable safety reference material on the job site.

d. Attend the pre-construction conference, pre-work meetings including preparatory inspection meeting, and periodic in-progress meetings.

e. Implement and enforce accepted APPS and AHAs.

f. Maintain a safety and health deficiency tracking system that monitors outstanding deficiencies until resolution. Post a list of unresolved safety and health deficiencies on the safety bulletin board.

g. Ensure sub-contractor compliance with safety and health requirements.

h. Ensure an approved "Contractor Electrical Energized Work Permit" prior to starting any activity on energized electrical systems.

i. Maintain a list of hazardous chemicals on site and their material safety data sheets.

Failure to perform the above duties will result in dismissal of the superintendent, QC Manager, and/or SSHO, and a project work stoppage. The project work stoppage will remain in effect pending approval of a suitable replacement.

1.6.3 Meetings

1.6.3.1 Preconstruction Conference

a. Contractor representatives who have a responsibility or significant role in accident prevention on the project shall attend the preconstruction conference. This includes the project superintendent, site safety and health officer, quality control supervisor, or any other assigned safety and health professionals who participated in the development of the APP (including the Activity Hazard Analyses (AHAs) and special plans, program and procedures associated with it).

b. Discuss the details of the submitted APP to include incorporated plans, programs, procedures and a listing of anticipated AHAs that will be developed and implemented during the performance of the contract. This list of proposed AHAs will be reviewed at the conference and an agreement will be reached between the Contractor and the Contracting Officer's representative as to which phases will require an analysis. In addition, establish a schedule for the preparation, submittal, review, and acceptance of AHAs to preclude project delays.

c. Deficiencies in the submitted APP will be brought to the attention of the Contractor at the preconstruction conference, and the Contractor shall revise the plan to correct deficiencies and re-submit it for acceptance. Do not begin work until there is an accepted APP.

d. The functions of a Preconstruction conference may take place at the Post-Award Kickoff meeting for Design Build Contracts.

1.6.3.2 Safety Meetings

Conduct and document meetings as required by EM 385-1-1. Attach minutes showing contract title, signatures of attendees and a list of topics discussed to the Contractors' daily quality control report.

1.7 ACCIDENT PREVENTION PLAN (APP)

Use a qualified person to prepare the written site-specific APP. Prepare the APP in accordance with the format and requirements of USACE EM 385-1-1 and as supplemented herein. Cover all paragraph and subparagraph elements in USACE EM 385-1-1, Appendix A, "Minimum Basic Outline for Accident Prevention Plan". Specific requirements for some of the APP elements are described below. The APP shall be job-specific and address any unusual or unique aspects of the project or activity for which it is written. The APP shall interface with the Contractor's overall safety and health program. Include any portions of the Contractor's overall safety and health program referenced in the APP in the applicable APP element and made site-specific. The Government considers the Prime Contractor to be the "controlling authority" for all work site safety and health of the subcontractors. Contractors are responsible for informing their subcontractors of the safety provisions under the terms of the contract and the penalties for noncompliance, coordinating the work to prevent one craft from interfering with or creating hazardous working conditions for other crafts, and inspecting subcontractor operations to ensure that accident prevention responsibilities are being carried out. The APP shall be signed by the person and firm (senior person) preparing the APP, the Contractor, the on-site superintendent, the designated site safety and health officer, the Contractor Quality Control Manager, and any designated CSP and/or CIH.

Submit the APP to the Contracting Officer 15 calendar days prior to the date of the preconstruction conference for acceptance. Work cannot proceed without an accepted APP.

Once accepted by the Contracting Officer, the APP and attachments will be enforced as part of the contract. Disregarding the provisions of this contract or the accepted APP will be cause for stopping of work, at the discretion of the Contracting Officer, until the matter has been rectified.

Once work begins, changes to the accepted APP shall be made with the knowledge and concurrence of the Contracting Officer, project superintendent, SSHO and quality control manager. Should any severe hazard exposure, i.e. imminent danger, become evident, stop work in the area, secure the area, and develop a plan to remove the exposure and control the hazard. Notify the Contracting Officer within 24 hours of discovery. Eliminate/remove the hazard. In the interim, take all necessary action to restore and maintain safe working conditions in order to safeguard onsite personnel, visitors, the public (as defined by ASSE/SAFE A10.34,) and the environment.

Copies of the accepted plan will be maintained at the Contracting Officer's office and at the job site. Continuously review and amend the APP, as necessary, throughout the life of the contract. Incorporate unusual or high-hazard activities not identified in the original APP as they are discovered.

1.7.1 EM 385-1-1 Contents

In addition to the requirements outlines in Appendix A of USACE EM 385-1-1, the following is required:

a. Names and qualifications (resumes including education, training, experience and certifications) of all site safety and health personnel designated to perform work on this project to include the designated site safety and health officer and other competent and qualified

personnel to be used such as CSPs, CIHs, STSs, CHSTs. Specify the duties of each position.

b. Qualifications of competent and of qualified persons. As a minimum, designate and submit qualifications of competent persons for each of the following major areas: excavation; scaffolding; fall protection; hazardous energy; confined space; health hazard recognition, evaluation and control of chemical, physical and biological agents; personal protective equipment and clothing to include selection, use and maintenance.

c. Confined Space Entry Plan. Develop a confined and/or enclosed space entry plan in accordance with USACE EM 385-1-1, applicable OSHA standards 29 CFR 1910, 29 CFR 1915, and 29 CFR 1926, OSHA Directive 2.100, and any other federal, state and local regulatory requirements identified in this contract. Identify the qualified person's name and qualifications, training, and experience. Delineate the qualified person's authority to direct work stoppage in the event of hazardous conditions. Include procedure for rescue by contractor personnel and the coordination with emergency responders. (If there is no confined space work, include a statement that no confined space work exists and none will be created.)

d. Crane Critical Lift Plan. Prepare and sign weight handling critical lift plans for lifts over 75 percent of the capacity of the crane or hoist (or lifts over 50 percent of the capacity of a barge mounted mobile crane's hoists) at any radius of lift; lifts involving more than one crane or hoist; lifts of personnel; and lifts involving non-routine rigging or operation, sensitive equipment, or unusual safety risks. Submit 15 calendar days prior to on-site work and include the requirements of USACE EM 385-1-1, paragraph 16.H. and the following:

(1) For lifts of personnel, demonstrate compliance with the requirements of 29 CFR 1926.550(g).

(2) For barge mounted mobile cranes, barge stability calculations identifying barge list and trim based on anticipated loading; and load charts based on calculated list and trim. The amount of list and trim shall be within the crane manufacturer's requirements.

e. Fall Protection and Prevention (FP&P) Program Documentation. The program documentation shall be site specific and address all fall hazards in the work place and during different phases of construction. Address how to protect and prevent workers from falling to lower levels when they are exposed to fall hazards above 6 feet. A qualified person for fall protection shall prepare and sign the program documentation. Include fall protection and prevention systems, equipment and methods employed for every phase of work, responsibilities, assisted rescue, self-rescue and evacuation procedures, training requirements, and monitoring methods. Revise the Fall Protection and Prevention Program Documentation every six months for lengthy projects, reflecting any changes during the course of construction due to changes in personnel, equipment, systems or work habits. Keep and maintain the accepted Fall Protection and Prevention Program Documentation at the job site for the duration of the project. Include the Fall Protection and Prevention Program Documentation in the Accident Prevention Plan (APP).

f. Site Demolition Plan. The safety and health aspects prepared in accordance with Section 02 41 00 DEMOLITION and referenced sources.

Include engineering survey as applicable.

g. Excavation Plan. The safety and health aspects prepared in accordance with Section 31 23 00.00 20 EXCAVATION AND FILL.

1.8 ACTIVITY HAZARD ANALYSIS (AHA)

The Activity Hazard Analysis (AHA) format shall be in accordance with USACE EM 385-1-1, Section 1. Submit the AHA for review at least 15 calendar days prior to the start of each phase. Format subsequent AHAs as amendments to the APP. The analysis should be used during daily inspections to ensure the implementation and effectiveness of the activity's safety and health controls.

The AHA list will be reviewed periodically (at least monthly) at the Contractor supervisory safety meeting and updated as necessary when procedures, scheduling, or hazards change.

Develop the activity hazard analyses using the project schedule as the basis for the activities performed. Any activities listed on the project schedule will require an AHA. The AHAs will be developed by the contractor, supplier or subcontractor and provided to the prime contractor for submittal to the Contracting Officer.

1.9 DISPLAY OF SAFETY INFORMATION

Within 1 calendar days after commencement of work, erect a safety bulletin board at the job site. Where size, duration, or logistics of project do not facilitate a bulletin board, an alternative method, acceptable to the Contracting Officer, that is accessible and includes all mandatory information for employee and visitor review, shall be deemed as meeting the requirement for a bulletin board. Include and maintain information on safety bulletin board as required by EM 385-1-1, section 01.A.06. Additional items required to be posted include:

a. Confined space entry permit.

b. Hot work permit.

c. Contractor Electrical Energized Work Permit.

1.10 SITE SAFETY REFERENCE MATERIALS

Maintain safety-related references applicable to the project, including those listed in the article "References." Maintain applicable equipment manufacturer's manuals.

1.11 EMERGENCY MEDICAL TREATMENT

Contractors will arrange for their own emergency medical treatment. Government has no responsibility to provide emergency medical treatment.

1.12 REPORTS

1.12.1 Accident Reports

a. Conduct an accident investigation for recordable injuries and illnesses, as defined in 1.3.h, and property damage accidents resulting in at least $2,000 in damages, to establish the root cause(s) of the

accident, complete the Navy Contractor Significant Incident Report (CSIR), and provide the report to the Contracting Officer within 5 calendar day(s) of the accident. The Contracting Officer will provide copies of any required or special forms.

b. Conduct an accident investigation for any weight handling equipment accident (including rigging gear accidents) to establish the root cause(s) of the accident, complete the WHE Accident Report (Crane and Rigging Gear) form and provide the report to the Contracting Officer within 30 calendar days of the accident. Do not proceed with crane operations until cause is determined and corrective actions have been implemented to the satisfaction of the contracting officer. The Contracting Officer will provide a blank copy of the accident report form.

1.12.2 Accident Notification

Notify the Contracting Officer as soon as practical, but not later than four hours, after any accident meeting the definition of Recordable Injuries or Illnesses or High Visibility Accidents, property damage equal to or greater than $2,000, or any weight handling equipment accident. Within notification include contractor name; contract title; type of contract; name of activity, installation or location where accident occurred; date and time of accident; names of personnel injured; extent of property damage, if any; extent of injury, if known, and brief description of accident (to include type of construction equipment used, PPE used, etc.). Preserve the conditions and evidence on the accident site until the Government investigation team arrives on-site and Government investigation is conducted.

1.12.3 Crane Reports

Submit crane inspection reports required in accordance with USACE EM 385-1-1, Appendix I and as specified herein with Daily Reports of Inspections.

1.13 HOT WORK

Submit and obtain a written permit prior to performing "Hot Work" (welding, cutting, etc.) or operating other flame-producing/spark producing devices, from the Fire Division. A permit is required from the Explosives Safety Office for work in and around where explosives are processed, stored, or handled. CONTRACTORS ARE REQUIRED TO MEET ALL CRITERIA BEFORE A PERMIT IS ISSUED. The Contractor will provide at least two (2) twenty (20) pound 4A:20 BC rated extinguishers for normal "Hot Work". All extinguishers shall be current inspection tagged, approved safety pin and tamper resistant seal. It is also mandatory to have a designated FIRE WATCH for any "Hot Work" done at this activity. The Fire Watch shall be trained in accordance with NFPA 51B and remain on-site for a minimum of 30 minutes after completion of the task or as specified on the hot work permit.

When starting work in the facility, require personnel to familiarize themselves with the location of the nearest fire alarm boxes and place in memory the emergency Fire Division phone number. ANY FIRE, NO MATTER HOW SMALL, SHALL BE REPORTED TO THE RESPONSIBLE FIRE DIVISION IMMEDIATELY.

1.14 FACILITY OCCUPANCY CLOSURE

Streets, walks, and other facilities occupied and used by the Government

shall not be closed or obstructed without written permission from the Contracting Officer.

1.15 SEVERE STORM PLAN

In the event of a severe storm warning, the Contractor must:

a. Secure outside equipment and materials and place materials that could be damaged in protected areas.

b. Check surrounding area, including roof, for loose material, equipment, debris, and other objects that could be blown away or against existing facilities.

c. Ensure that temporary erosion controls are adequate.

1.16 CONFINED SPACE ENTRY REQUIREMENTS.

Contractors entering and working in confined spaces performing shipyard industry work are required to follow the requirements of OSHA 29 CFR 1915 Subpart B. Contractors entering and working in confined spaces performing general industry work are required to follow the requirements of OSHA 29 CFR 1926.

Navy personnel entering and working in confined spaces performing naval maritime facility work are required to follow the requirements of NAVSEA S6470-AA-SAF-101 Rev. 03. Navy personnel entering and working in confined spaces performing non-maritime facility work are required to follow the requirements of ND OPNAVINST 5100.23 Chapter 27.

PART 2 PRODUCTS

2.1 CONFINED SPACE SIGNAGE

Provide permanent signs integral to or securely attached to access covers for new permit-required confined spaces. Signs wording: "DANGER--PERMIT-REQUIRED CONFINED SPACE - DO NOT ENTER -" in bold letters a minimum of one inch in height and constructed to be clearly legible with all paint removed. The signal word "DANGER" shall be red and readable from 5 feet.

2.2 FALL PROTECTION ANCHORAGE

Leave in place fall protection anchorage, conforming to ASSE/SAFE Z359.1, installed under the supervision of a qualified person in fall protection, for continued customer use and so identified by signage stating the capacity of the anchorage (strength and number of persons who may be tied-off to it at any one time).

2.3 PERSONAL PROTECTIVE EQUIPMENT

All personnel who enter a construction site area shall wear Personal Protective Equipment (PPE) at all times as outlined in the EM 385-1-1. In addition to the requirements of EM 385-1-1, Safety Glasses ASSE/SAFE Z87.1 and High-Visibility Apparel (ANSI/ISEA 107 Performance Class II, Shirt or Vest) will be worn at all times on construction sites. Hearing protection is required in noise hazard areas or when performing noise hazard tasks. Mandatory PPE on all construction sites includes:

a. Hard Hats

b. Safety Glasses

c. High-Visibility Shirt or Vest

d. Safety-Toed Shoes or Boots

PART 3 EXECUTION

3.1 CONSTRUCTION AND/OR OTHER WORK

Comply with USACE EM 385-1-1, NFPA 241, UFC 3-560-01, NFPA 70E, IEEE C2, the APP, the AHA, Federal and/or State OSHA regulations, and other related submittals and activity fire and safety regulations. The most stringent standard prevails.

3.1.1 Hazardous Material Use

Each hazardous material must receive approval from the Contracting Officer or their designated representative prior to being brought onto the job site or prior to any other use in connection with this contract. Allow a minimum of 10 working days for processing of the request for use of a hazardous material.

3.1.2 Hazardous Material Exclusions

Notwithstanding any other hazardous material used in this contract, radioactive materials or instruments capable of producing ionizing/non-ionizing radiation (with the exception of radioactive material and devices used in accordance with USACE EM 385-1-1 such as nuclear density meters for compaction testing and laboratory equipment with radioactive sources) as well as materials which contain asbestos, mercury or polychlorinated biphenyls, di-isocynates, lead-based paint are prohibited. The Contracting Officer, upon written request by the Contractor, may consider exceptions to the use of any of the above excluded materials. The Radiation Safety Officer (RSO) must be notified prior to excepted items of radioactive material and devices being brought on base.

3.1.3 Unforeseen Hazardous Material

The design should have identified materials such as PCB, lead paint, and friable and non-friable asbestos, and other OSHA regulated chemicals (i.e. 29 CFR 1910.1000). If additional material, not indicated, that may be hazardous to human health upon disturbance during construction operations is encountered, stop that portion of work and notify the Contracting Officer immediately. Within 14 calendar days the Government will determine if the material is hazardous. If material is not hazardous or poses no danger, the Government will direct the Contractor to proceed without change. If material is hazardous and handling of the material is necessary to accomplish the work, the Government will issue a modification pursuant to "FAR 52.243-4, Changes" and "FAR 52.236-2, Differing Site Conditions."

3.2 PRE-OUTAGE COORDINATION MEETING

Contractors are required to apply for utility outages at least 15 days in advance. As a minimum, the request should include the location of the outage, utilities being affected, duration of outage and any necessary sketches. Special requirements for electrical outage requests are

contained elsewhere in this specification section. Once approved, and prior to beginning work on the utility system requiring shut down, attend a pre-outage coordination meeting with the Contracting Officer to review the scope of work and the lock-out/tag-out procedures for worker protection. No work will be performed on energized electrical circuits unless proof is provided that no other means exist.

3.3 CONTROL OF HAZARDOUS ENERGY (LOCKOUT/TAGOUT)

Contractor shall ensure that each employee is familiar with and complies with these procedures and USACE EM 385-1-1, Section 12, Control of Hazardous Energy.

Contracting Officer will, at the Contractor's request, apply lockout/tagout tags and take other actions that, because of experience and knowledge, are known to be necessary to make the particular equipment safe to work on for Government owned and operated systems.

No person, regardless of position or authority, shall operate any switch, valve, or equipment that has an official lockout/tagout tag attached to it, nor shall such tag be removed except as provided in this section. No person shall work on any energized equipment including, but not limited to activities such as erecting, installing, constructing, repairing, adjusting, inspecting, un-jamming, setting up, trouble shooting, testing, cleaning, dismantling, servicing and maintaining machines, equipment, or processes until an evaluation has been conducted identifying the energy source and the procedures which will be taken to ensure the safety of personnel.

No person shall work on any equipment that requires a lockout/tagout tag unless he, his immediate supervisor, project leader, or a subordinate has in his possession the stubs of the required lockout/tagout tags.

When work is to be performed on electrical circuits, only qualified personnel shall perform work on electrical circuits.

A supervisor who is required to enter an area protected by a lockout/tagout tag will be considered a member of the protected group provided he notifies the holder of the tag stub each time he enters and departs from the protected area.

Identification markings on building light and power distribution circuits shall not be relied on for established safe work conditions.

Before clearance will be given on any equipment other than electrical (generally referred to as mechanical apparatus), the apparatus, valves, or systems shall be secured in a passive condition with the appropriate vents, pins, and locks.

Pressurized or vacuum systems shall be vented to relieve differential pressure completely.

Vent valves shall be tagged open during the course of the work.

Where dangerous gas or fluid systems are involved, or in areas where the environment may be oxygen deficient, system or areas shall be purged, ventilated, or otherwise made safe prior to entry.

3.3.1 Tag Placement

Lockout/tagout tags shall be completed in accordance with the regulations printed on the back thereof and attached to any device which, if operated, could cause an unsafe condition to exist.

If more than one group is to work on any circuit or equipment, the employee in charge of each group shall have a separate set of lockout/tagout tags completed and properly attached.

When it is required that certain equipment be tagged, the Government will review the characteristics of the various systems involved that affect the safety of the operations and the work to be done; take the necessary actions, including voltage and pressure checks, grounding, and venting, to make the system and equipment safe to work on; and apply such lockout/tagout tags to those switches, valves, vents, or other mechanical devices needed to preserve the safety provided. This operation is referred to as "Providing Safety Clearance."

3.3.2 Tag Removal

When any individual or group has completed its part of the work and is clear of the circuits or equipment, the supervisor, project leader, or individual for whom the equipment was tagged shall turn in his signed lockout/tagout tag stub to the Contracting Officer. That group's or individual's lockout/tagout tags on equipment may then be removed on authorization by the Contracting Officer.

3.4 FALL HAZARD PROTECTION AND PREVENTION PROGRAM

Establish a fall protection and prevention program, for the protection of all employees exposed to fall hazards. Within the program include company policy, identify responsibilities, education and training requirements, fall hazard identification, prevention and control measures, inspection, storage, care and maintenance of fall protection equipment and rescue and evacuation procedures.

3.4.1 Training

Institute a fall protection training program. As part of the Fall Hazard Protection and Prevention Program, provide training for each employee who might be exposed to fall hazards. Provide training by a competent person for fall protection in accordance with USACE EM 385-1-1, Section 21.B.

3.4.2 Fall Protection Equipment and Systems

Enforce use of the fall protection equipment and systems designated for each specific work activity in the Fall Protection and Prevention Plan and/or AHA at all times when an employee is exposed to a fall hazard. Protect employees from fall hazards as specified in EM 385-1-1, Section 21. In addition to the required fall protection systems, safety skiff, personal floatation devices, life rings etc., are required when working above or next to water in accordance with USACE EM 385-1-1, Paragraphs 21.N through 21.N.04. Personal fall arrest systems are required when working from an articulating or extendible boom, swing stages, or suspended platform. In addition, personal fall arrest systems are required when operating other equipment such as scissor lifts if the work platform is capable of being positioned outside the wheelbase. The need for tying-off in such equipment is to prevent ejection of the employee from the equipment

during raising, lowering, or travel. Fall protection must comply with 29 CFR 1926.500, Subpart M, USACE EM 385-1-1 and ASSE/SAFE A10.32.

3.4.2.1 Personal Fall Arrest Equipment

Personal fall arrest equipment, systems, subsystems, and components shall meet ASSE/SAFE Z359.1. Only a full-body harness with a shock-absorbing lanyard or self-retracting lanyard is an acceptable personal fall arrest body support device. Body belts may only be used as a positioning device system (for uses such as steel reinforcing assembly and in addition to an approved fall arrest system). Harnesses shall have a fall arrest attachment affixed to the body support (usually a Dorsal D-ring) and specifically designated for attachment to the rest of the system. Only locking snap hooks and carabiners shall be used. Webbing, straps, and ropes shall be made of synthetic fiber. The maximum free fall distance when using fall arrest equipment shall not exceed 6 feet. The total fall distance and any swinging of the worker (pendulum-like motion) that can occur during a fall shall always be taken into consideration when attaching a person to a fall arrest system.

3.4.3 Fall Protection for Roofing Work

Implement fall protection controls based on the type of roof being constructed and work being performed. Evaluate the roof area to be accessed for its structural integrity including weight-bearing capabilities for the projected loading.

a. Low Sloped Roofs:

(1) For work within 6 feet of an edge, on low-slope roofs, protect personnel from falling by use of personal fall arrest systems, guardrails, or safety nets. A safety monitoring system is not adequate fall protection and is not authorized.

(2) For work greater than 6 feet from an edge, erect and install warning lines in accordance with 29 CFR 1926.500 and USACE EM 385-1-1.

b. Steep-Sloped Roofs: Work on steep-sloped roofs requires a personal fall arrest system, guardrails with toe-boards, or safety nets. This requirement also includes residential or housing type construction.

3.4.4 Existing Anchorage

Existing anchorage must be certified (or re-certified) by a qualified person for fall protection to be used for attachment of personal fall arrest equipment in accordance with ASSE/SAFE Z359.1. Existing horizontal lifeline anchorages must be certified (or re-certified) by a registered professional engineer with experience in designing horizontal lifeline systems.

3.4.5 Horizontal Lifelines

Design, install, certify and use under the supervision of a qualified person horizontal lifelines for fall protection as part of a complete fall arrest system which maintains a safety factor of 2 (29 CFR 1926.500).

3.4.6 Guardrails and Safety Nets

Design, install and use guardrails and safety nets in accordance with EM 385-1-1 and 29 CFR 1926 Subpart M.

3.4.7 Rescue and Evacuation Procedures

When personal fall arrest systems are used, the contractor must ensure that the mishap victim can self-rescue or can be rescued promptly should a fall occur. Prepare a Rescue and Evacuation Plan and include a detailed discussion of the following: methods of rescue; methods of self-rescue; equipment used; training requirement; specialized training for the rescuers; procedures for requesting rescue and medical assistance; and transportation routes to a medical facility. Include the Rescue and Evacuation Plan within the Activity Hazard Analysis (AHA) for the phase of work, in the Fall Protection and Prevention (FP&P) Plan, and the Accident Prevention Plan (APP).

3.5 SCAFFOLDING

Provide employees with a safe means of access to the work area on the scaffold. Climbing of any scaffold braces or supports not specifically designed for access is prohibited. Access scaffold platforms greater than 20 feet maximum in height by use of a scaffold stair system. Do not use vertical ladders commonly provided by scaffold system manufacturers for accessing scaffold platforms greater than 20 feet maximum in height. The use of an adequate gate is required. Ensure that employees are qualified to perform scaffold erection and dismantling. Do not use scaffold without the capability of supporting at least four times the maximum intended load or without appropriate fall protection as delineated in the accepted fall protection and prevention plan. Stationary scaffolds must be attached to structural building components to safeguard against tipping forward or backward. Give special care to ensure scaffold systems are not overloaded. Side brackets used to extend scaffold platforms on self-supported scaffold systems for the storage of material is prohibited. The first tie-in shall be at the height equal to 4 times the width of the smallest dimension of the scaffold base. Place work platforms on mud sills. Scaffold or work platform erectors shall have fall protection during the erection and dismantling of scaffolding or work platforms that are more than six feet. Delineate fall protection requirements when working above six feet or above dangerous operations in the Fall Protection and Prevention (FP&P) Plan and Activity Hazard Analysis (AHA) for the phase of work.

3.5.1 Stilts

The use of stilts for gaining additional height in construction, renovation, repair or maintenance work is prohibited.

3.6 EQUIPMENT

3.6.1 Material Handling Equipment

a. Material handling equipment such as forklifts shall not be modified with work platform attachments for supporting employees unless specifically delineated in the manufacturer's printed operating instructions.

b. The use of hooks on equipment for lifting of material must be in accordance with manufacturer's printed instructions.

c. Operators of forklifts or power industrial trucks shall be licensed in accordance with OSHA.

3.6.2 Weight Handling Equipment

a. Equip cranes and derricks as specified in EM 385-1-1, section 16.

b. Notify the Contracting Officer 15 days in advance of any cranes entering the activity so that necessary quality assurance spot checks can be coordinated. Contractor's operator shall remain with the crane during the spot check.

c. Comply with the crane manufacturer's specifications and limitations for erection and operation of cranes and hoists used in support of the work. Perform erection under the supervision of a designated person (as defined in ASME B30.5). Perform all testing in accordance with the manufacturer's recommended procedures.

d. Comply with ASME B30.5 for mobile and locomotive cranes, ASME B30.22 for articulating boom cranes, ASME B30.3 for construction tower cranes, and ASME B30.8 for floating cranes and floating derricks.

e. Under no circumstance shall a Contractor make a lift at or above 90 percent of the cranes rated capacity in any configuration.

f. When operating in the vicinity of overhead transmission lines, operators and riggers shall be alert to this special hazard and follow the requirements of USACE EM 385-1-1 Section 11 and ASME B30.5 or ASME B30.22 as applicable.

g. Do not use crane suspended personnel work platforms (baskets) unless the Contractor proves that using any other access to the work location would provide a greater hazard to the workers or is impossible. Do not lift personnel with a line hoist or friction crane.

h. Inspect, maintain, and recharge portable fire extinguishers as specified in NFPA 10, Standard for Portable Fire Extinguishers.

i. All employees must keep clear of loads about to be lifted and of suspended loads.

j. Use cribbing when performing lifts on outriggers.

k. The crane hook/block must be positioned directly over the load. Side loading of the crane is prohibited.

l. A physical barricade must be positioned to prevent personnel from entering the counterweight swing (tail swing) area of the crane.

m. Certification records which include the date of inspection, signature of the person performing the inspection, and the serial number or other identifier of the crane that was inspected shall always be available for review by Contracting Officer personnel.

n. Written reports listing the load test procedures used along with any repairs or alterations performed on the crane shall be available for review by Contracting Officer personnel.

o. Certify that all crane operators have been trained in proper use of all safety devices (e.g. anti-two block devices).

p. Take steps to ensure that wind speed does not contribute to loss of control of the load during lifting operations. Prior to conducting lifting operations set a maximum wind speed at which a crane can be safely operated based on the equipment being used, the load being lifted, experience of operators and riggers, and hazards on the work site. This maximum wind speed determination shall be included as part of the activity hazard analysis plan for that operation.

3.6.3 Equipment and Mechanized Equipment

a. Proof of qualifications for operator shall be kept on the project site for review.

b. Manufacturer specifications or owner's manual for the equipment shall be on-site and reviewed for additional safety precautions or requirements that are sometimes not identified by OSHA or USACE EM 385-1-1. Incorporate such additional safety precautions or requirements into the AHAs.

3.7 EXCAVATIONS

Perform soil classification by a competent person in accordance with 29 CFR 1926.

3.7.1 Utility Locations

Prior to digging, the appropriate digging permit must be obtained. All underground utilities in the work area must be positively identified by a private utility locating service in addition to any station locating service and coordinated with the station utility department. Any markings made during the utility investigation must be maintained throughout the contract.

3.7.2 Utility Location Verification

The Contractor must physically verify underground utility locations by hand digging using wood or fiberglass handled tools when any adjacent construction work is expected to come within three feet of the underground system. Digging within 2 feet of a known utility must not be performed by means of mechanical equipment; hand digging shall be used. If construction is parallel to an existing utility expose the utility by hand digging every 100 feet if parallel within 5 feet of the excavation.

3.7.3 Shoring Systems

Trench and shoring systems must be identified in the accepted safety plan and AHA. Manufacture tabulated data and specifications or registered engineer tabulated data for shoring or benching systems shall be readily available on-site for review. Job-made shoring or shielding must have the registered professional engineer stamp, specifications, and tabulated data. Extreme care must be used when excavating near direct burial electric underground cables.

3.7.4 Trenching Machinery

Operate trenching machines with digging chain drives only when the

spotters/laborers are in plain view of the operator. Provide operator and spotters/laborers training on the hazards of the digging chain drives with emphasis on the distance that needs to be maintained when the digging chain is operating. Keep documentation of the training on file at the project site.

3.8 UTILITIES WITHIN CONCRETE SLABS

Utilities located within concrete slabs or pier structures, bridges, and the like, are extremely difficult to identify due to the reinforcing steel used in the construction of these structures. Whenever contract work involves concrete chipping, saw cutting, or core drilling, the existing utility location must be coordinated with station utility departments in addition to a private locating service. Outages to isolate utility systems must be used in circumstances where utilities are unable to be positively identified. The use of historical drawings does not alleviate the contractor from meeting this requirement.

3.9 ELECTRICAL

3.9.1 Conduct of Electrical Work

Underground electrical spaces must be certified safe for entry before entering to conduct work. Cables that will be cut must be positively identified and de-energized prior to performing each cut. Positive cable identification must be made prior to submitting any outage request for electrical systems. Arrangements are to be coordinated with the Contracting Officer and Station Utilities for identification. The Contracting Officer will not accept an outage request until the Contractor satisfactorily documents that the circuits have been clearly identified. Perform all high voltage cable cutting remotely using hydraulic cutting tool. When racking in or live switching of circuit breakers, no additional person other than the switch operator will be allowed in the space during the actual operation. Plan so that work near energized parts is minimized to the fullest extent possible. Use of electrical outages clear of any energized electrical sources is the preferred method. When working in energized substations, only qualified electrical workers will be permitted to enter. When work requires Contractor to work near energized circuits as defined by the NFPA 70, high voltage personnel must use personal protective equipment that includes, as a minimum, electrical hard hat, safety shoes, insulating gloves with leather protective sleeves, fire retarding shirts, coveralls, face shields, and safety glasses. In addition, provide electrical arc flash protection for personnel as required by NFPA 70E. Insulating blankets, hearing protection, and switching suits may also be required, depending on the specific job and as delineated in the Contractor's AHA.

3.9.2 Arc Flash Risk/Hazard Analysis

Contractor shall provide an Arc Flash Risk/Hazard Analysis in accordance with NFPA 70E for all locations where workers may be exposed to arc flash hazard (work on energized electrical equipment). The Arc Flash Risk/Hazard Analysis shall be sealed and signed by a qualified professional engineer.

In addition to Arc Flash Risk/Hazard Analysis required for safety during construction, provide an Arc Flash Risk/Hazard Analysis for the entire electrical distribution system as constructed. Provide equipment labels as required by NFPA 70E.

3.9.3 Arc Flash Risk/Hazard Analysis Qualifications

Contractor shall engage the services of a qualified organization to provide Arc Flash Risk/Hazard Analysis of the electrical distribution system. Organization shall be independent of the supplier, manufacturer, and installer of the equipment. The organization shall be a first tier subcontractor. This work shall not be performed by a second tier subcontractor.

a. Submit name and qualifications of organization. Organization shall have been regularly engaged in providing Arc Flash Risk/Hazard Analysis for a minimum of 5 years.

b. Submit name and qualifications of the professional engineer performing the analysis. Include a list of three comparable jobs performed by the engineer with specific names and telephone numbers for reference.

3.9.4 Contractor Electrical Energized Work Permit

All work on energized electrical systems must have an approved Contractor Electrical Energized Work Permit. The results of the Arc Flash Risk/Hazard Analysis shall be included in the "Contractor Electrical Energized Work Permit" request. Flame-resistant (FR) clothing and personal protective equipment (PPE) shall be rated for a minimum of 8 calories per square centimeter even if the flash hazard analysis indicates a lower value. A blank copy of the permit request is attached. An editable version may be obtained from the Contracting Officer.

3.9.5 Portable Extension Cords

Size portable extension cords in accordance with manufacturer ratings for the tool to be powered and protected from damage. Immediately remove from service all damaged extension cords. Portable extension cords shall meet the requirements of NFPA 70E and OSHA electrical standards.

3.10 WORK IN CONFINED SPACES

Comply with the requirements in Section 34 of USACE EM 385-1-1, OSHA 29 CFR 1910.146 and OSHA 29 CFR 1926.21(b)(6). Any potential for a hazard in the confined space requires a permit system to be used.

a. Entry Procedures. Prohibit entry into a confined space by personnel for any purpose, including hot work, until the qualified person has conducted appropriate tests to ensure the confined or enclosed space is safe for the work intended and that all potential hazards are controlled or eliminated and documented. (See Section 34 of USACE EM 385-1-1 for entry procedures.) All hazards pertaining to the space shall be reviewed with each employee during review of the AHA.

b. Forced air ventilation is required for all confined space entry operations and the minimum air exchange requirements must be maintained to ensure exposure to any hazardous atmosphere is kept below its' action level.

c. Sewer wet wells require continuous atmosphere monitoring with audible alarm for toxic gas detection.

-- End of Section --

CONTRACTOR ELECTRICAL ENERGIZED WORK PERMIT

PART I: TO BE COMPLETED BY THE REQUESTER: CONTRACT NUMBER: _____

JO/DO NUMBER_____ DATE OF REQUEST: _____

ANTICIPATED DATE WORK IS TO BE PERFORMED: _____.

(1) Description of circuit/equipment/job location: _____

_____

(2) Description of work to be done: _____

_____

(3) Justification of why the circuit/equipment cannot be de-energized or the work deferred until the next scheduled outage:

_____

_____

NOTE: ATTACHED COPY OF OUTAGE REQUESTS INCLUDING REASONS FOR DENIAL

_____ _____

Requester/Title Date

PART II: TO BE COMPLETED BY THE ELECTRICALLY QUALIFIED PERSONS DOING THE WORK:

	Check when Complete
(1) Detailed job description procedure to be used in performing the above detailed work: _____	☐
(2) Description of the Safe Work Practices to be employed: _____	☐
(3) Results of the Shock Hazard Analysis: _____	☐
(4) Determination of the Shock Protection Boundaries: _____	☐
(5) Results of the Arc Flash Hazard Analysis: _____	☐
Determination of the Arc Flash Protection Boundary: _____	☐
(6) Necessary personnel protective equipment to safely perform the assigned task: _____	☐
_____	
(7) Means employed to restrict the access of unqualified persons from the work area: _____	☐
_____	
(8) Evidence of completion of a Job Briefing including discussion of any job – related hazards: _____	☐
_____	

(10) Do you agree the above described work can be done safely? ☐ Yes ☐ No (If no, return to requester)

PART III: RECOMMEND APPROVAL(S) TO PERFORM THE WORK WHILE ELECTRICALLY ENERGIZED:

_____ _____ _____

OICC SIGNATURE **CI SIGNATURE** **OPS SIGNATURE**

_____

NAVFAC MIDLANT CONTRUCTION SAFETY MANAGER

PART IV: FINAL APPROVAL:

_____

NAVFAC MILANT COMMANDING OFFICER

NOTE: COMPLETED FORM WILL BE KEPT ON FILE BY MIDLANT CONSTRUCTION SAFETY MANAGER

CONTRACTOR ELECTRICAL ENERGIZED WORK PERMIT

1. Detailed job description procedure to be used in performing the above detailed work:

2. Description of the Safe Work Practices to be employed

SECTION 01 45 00.05 20

DESIGN AND CONSTRUCTION QUALITY CONTROL
04/10

PART 1 GENERAL

1.1 REFERENCES

The publications listed below form a part of this specification to the extent referenced. The publications are referred to in the text by the basic designation only.

ASTM INTERNATIONAL (ASTM)

ASTM E 329	(2009) Standard Specification for Agencies Engaged in the Testing and/or Inspection of Materials Used in Construction

U.S. ARMY CORPS OF ENGINEERS (USACE)

EM 385-1-1	(2008) Safety and Health Requirements Manual

U.S. GREEN BUILDING COUNCIL (USGBC)

LEED	(2002; R 2005) Leadership in Energy and Environmental Design(tm) Green Building Rating System for New Construction (LEED-NC)

U.S. DEPARTMENT OF DEFENSE (DOD) UNIFIED FACILITIES CRITERIA (UFC)

UFC 1-300-09N	Design Procedures

1.2 SUBMITTALS

The use of a "G" following a submittal indicates that a Government approval action is required. Submit the following in accordance with Section 01 33 10.05 20 DESIGN SUBMITTAL PROCEDURES and Section 01 33 00.05 20 CONSTRUCTION SUBMITTAL PROCEDURES.

SD-01 Preconstruction Submittals

Design Quality Control (DQC) Plan; G

Submit a DQC Plan prior to the Post Award Kickoff Meeting.

Construction Quality Control (CQC) Plan; G

Submit a Construction QC Plan prior to start of construction.

Commissioning Plan; G

Submit a Commissioning Plan within 60 days of approval of Cx agent.

SD-06 Test Reports

Acceptance Testing of Critical Systems Checklist

SD-07 Certificates

Preliminary Inspections and Final Acceptance Testing; G

Final Life Safety/Fire Protection Certification; G

IBC Special Inspections Certification; G

SD-11 Closeout Submittals

Summary Commissioning Report; G

1.3 QC PROGRAM REQUIREMENTS

Establish and maintain a QC program that is administered by a Design and Construction Quality Control organization, using Quality Control (Design and Construction) Plans, Commissioning Plans and Reports, meetings, a Coordination and Mutual Understanding Meeting, three phases of control, submittal review and approval, testing, completion inspections, and QC certifications and documentation necessary to provide design, materials, equipment, workmanship, fabrication, construction and operations which comply with the requirements of this Contract. The QC program shall cover on-site and off-site work. No construction work or testing may be performed unless the QC Manager is on the work site.

1.3.1 Design and Construction Quality Control Plans

The Contractor shall provide a project specific Design Quality Control (DQC) Plan and Construction Quality Control (CQC) Plan, for review and approval by the Government. The Contractor shall perform no design until the DQC Plan is approved and no construction until the CQC Plan is approved. The Contractor's plan shall include the following:

a. The QC organization for this contract, including member resumes.

b. A letter from an officer of the company designating the QC Manager, Alternate QC Manager, and Commissioning Authority, and their authority.

c. QC Manager qualifications.

d. Commissioning Authority qualifications and certification.

e. List of Definable Features of Work (DFOW) including list of design submittal packaging. DFOW is a task that is separate and distinct from other tasks and has control requirements and work crews unique to the task.

f. For the QC Plan. a plan to implement the "Three Phases of Control" for each DFOW.

g. For the QC Plan, a testing Plan, log and list of personnel and accredited laboratories that will perform tests. Construction materials testing laboratories must be accredited by a laboratory accreditation authority and will be required to submit a copy of the Certificate of Accreditation and Scope of Accreditation with the testing plan.

h. Submittal Log including design submittals, listing personnel who will review submittals and noting submittals for Government review.

i. Procedures for submitting and reviewing variations prior to submission to the Government.

j. As a part of the Contractor's plan, a statement of Special Inspections shall be prepared by the Designer of Record (DOR) describing a complete list of materials and work requiring special inspections, the inspections to be performed and any applicable quality assurance plans and structural observations. The Contractor's plan shall implement the applicable requirements of the International Building Code (IBC), Chapter 17 "Structural Tests and Special Inspections." The plan shall include a listing of the individuals, approved agencies or firms that will be retained for conducting the required special inspections accompanied by a description of individual inspector's experience and a copy of all required certifications. Structural tests and special inspections, as outlined in Chapter 17 of the IBC shall be conducted by individuals and agents that are under the direct supervision of a Registered Design Professional (RDP) and meet the requirements of ASTM E 329.

k. A plan for assuring the proper design, construction, installation of all life safety and fire protection features across all disciplines and trades. Examples of life safety and fire protection features include, but are not limited to, water distribution systems including fire pumps and fire hydrants, fire resistive assemblies such as fire rated walls/partitions and spray-applied fire proofing of structural components, fire alarm and detection systems, fire suppression and standpipe systems, means of egress components, emergency and exit lighting fixtures. As a part of the plan, a statement of Special Inspections shall be prepared by the Fire Protection Engineer Designer of Record (DOR) describing a complete list of materials and work requiring special inspections, the inspections to be performed and any applicable quality assurance plans and fire protection observations. The plan will include a listing of the individuals, approved agencies or firms that will be retained for conducting the required special inspections accompanied by a description of individual inspector's experience and a copy of all required certifications.

l. For the DQC plan, submit a formal Communication Plan the indicates the frequency of design meetings and what information is covered in those meetings, key design decision points tied to the Network Analysis Scheduled and how the DOR plans to include the Government in those decisions, peer review procedures, interdisciplinary coordination, design review procedures, comment resolution, etc.

The Communication Plan will emphasize key decisions and possible problems the Contractor and Government may encounter during the design phase of the project. Provide a plan to discuss design alternatives and design coordination with the stakeholders at the key decision points as they arise on the project. Identify individual stakeholders and suggested communication methods that will be employed to expedite and facilitate each anticipated critical decision. Communication methods may include: Concept Design Workshop, over-the-shoulder review meetings, presentation at client's office, lifecycle cost analysis presentation, technical phone conversation, and formal review meeting. The design portion of the Communication Plan must to be written by the Commissioning Authority and confirmed during the Post Award Kick off

Partnering. Update the Communication Plan at every Partnering meeting.

m. For the DQC Plan, procedures for insuring the design documents are submitted in accordance with UFC 1-300-09N DESIGN PROCEDURES and other procedures to ensure disciplines have been properly coordinated to eliminate conflicts.

n. For the DQC Plan, a list of design subcontractors and the scope of the work which each firm will accomplish.

1.3.2 Commissioning Plan

The Commissioning Authority shall provide a project specific Commissioning Plan for review and acceptance by the Government. Develop and submit the Commissioning Plan to define the on-site activities and roles and responsibilities for commissioning all building systems required by the Project Program paragraph entitled, Building Commissioning. The Commissioning Plan shall include all items required by the LEED version 2.2 and shall also include the following:

a. Provide a description of the Commissioning Authority's roles and responsibilities as well as organizational relationships with the Contractor's QC Manager and verification and testing personnel.

b. Provide a schedule of inspections during construction that includes periodic inspections by the system designer. Specify a minimum of three inspections.

c. Define the sequence and schedule for starting and balancing air distribution systems to ensure construction materials, such as architectural finishes, are installed under the appropriate environmental conditions. Also address the procedure that will be used to "dry out" the structure.

d. Provide a schedule for all verification and functional performance tests. The Commissioning Authority shall be present for all functional performance tests.

e. Provide a schedule detailing training sessions for Government personnel. Training seeions are to address maintenance and operation of systems required to be commissioned.

f. Provide acceptance testing for critical systems as identified by NAVFAC Engineering & Construction Bulletin ECB issue 2008-03 dated 9/25/2008, attached. Provide the requirements identified under the "Ktr" column for all applicable project elements. The requirements identified are minimum requirements and do not reduce the requirements contained in the technical sections. Provide Acceptance Testing of Critical Systems Checklist showing compliance for all applicable elements for approval by the Contracting Officer.

1.3.3 Summary Commissioning Report

The Commissioning Authority whall provide a Summary Commissioning Report. The Summary Commissioning Report shall include all items required by LEED version 2.2.

1.4 QC ORGANIZATION

The QC Manager shall report to an officer of the firm and shall not be subordinate to the Project Superintendent or the Project Manager. The Contractor Quality Control (QC) person cannot be the Project Superintendent or the Project Manager on this project.

1.4.1 QC and Alternative QC Manager

QC and Alternative QC Manager qualifications:

a. Complete the course entitled "Construction Quality Management (CQM) for Contractors" and shall maintain a current certificate.

b. Five years of combined experience as a Superintendent, QC Manager, Project Manager, or Project Engineer on similar size and type construction contracts, and at least two years experience as a QC Manager.

c. Familiar with requirements of USACE EM 385-1-1, and experience in the areas of hazard identification and safety compliance.

QC and Alternative QC Manager responsibilities:

a. Participate in the Post Award Kick-off, Partnering, Preconstruction, Design Development, and Coordination and Mutual Understanding Meetings.

b. Implement the "Three Phase of Control" plan for each DFOW and notify the Contracting Officer at least 3 business days in advance of each Preparatory and Initial Phase meeting. Submit respective checklists to the Contracting Officer the next business day.

c. Ensure that no construction begins before the DOR has finalized the design for that segment of work, and construction submittals are approved as required.

d. Inspect all work and rework, using International Conference of Building Officials certified QC specialists as applicable, to ensure its compliance with contract requirements. Maintain a rework log.

e. Immediately stop any segment of work, which does not comply with the contract and plans and specifications, and direct the removal and replacement of any defective work.

f. Remove any individual from the site who fails to perform their work in a skillful, safe and workmanlike manner or whose work does not comply with the contract plans and specifications.

g. Prepare daily QC Reports.

h. Ensure that Contractor Production Reports are prepared daily.

i. Hold weekly QC meetings with the Commissioning Authority, DOR (or representative), Superintendent and the Contracting Officer; participation shall be suitable for the phase of work. Distribute minutes of these meetings.

j. Ensure that design and construction submittals are reviewed and

approved, as required by the contract, prior to allowing material on site and work to proceed with these items. Maintain a submittal log.

k. Update As-built drawings daily, maintaining up-to-date set on site.

l. Maintain a testing plan and log. Ensure that all testing is performed in accordance with the contract. Review all test reports and notify the Contracting Officer of all deficiencies, along with a proposal for corrective action.

m. Maintain rework log on site, noting dates deficiency identified, and date corrected.

n. Certify and sign statement on each invoice that all work to be paid under the invoice has been completed in accordance with contract requirements.

o. Perform Punch-out and participate in Pre-final and Final Inspections. Submit list of deficiencies to the Contracting Officer for each inspection. Correct all deficiencies prior to the Final inspection. Notify Contracting Officer prior to final inspection to establish a schedule date acceptable by the Contracting Officer.

p. Ensure that all required keys, operation and maintenance manuals, warranty certificates, and the As-built drawings are correct and complete, in accordance with the contract, and submitted to the Contracting Officer.

q. Assure that all applicable tests, special inspections, and observations required by the contract are performed.

r. Coordinate all factory and on-site testing, Testing Laboratory personnel, QC Specialists, and any other inspection and testing personnel required by this Contract.

s. Notify the Contracting Officer of any proposed changes to the QC plan.

t. Retain a copy of approved submittals at project site, including Contractor's copy of approved samples.

u. Update the Performance Assessment Plan as described in the UFGS Section 01 31 19.05 20 POST AWARD MEETINGS and discuss monthly at a QC meeting.

1.4.2 Commissioning Authority

The Commissioning Authority shall be a member of the QC organization, shall coordinate actions with the QC Manager, shall not be subordinate to the Project Superintendent or the Project Manager, and shall report findings directly to the government.

The Commissioning Authority shall meet the requirements of LEED with the following additional qualifications:

a. A minimum of 5 years experience as a design Architect or Engineer on similar size and type designs /or design-build contracts. Provide education, experience, and management capabilities on similar size and type contracts.

b. Be certified by a recognized Building Commissioning Organization. Acceptable minimum certifications are "Certified Cx Agent" from the Associated Air Balance Council (AABC); "Certified Building Cx Professional" from the Association of Energy Engineers (AEE); "Certified Cx Professional (CxP)" from the Building Commissioning Association (BCA); or "Commissioning Process Authority Professional" or Commissioning Process Manager" from the University of Wisconsin College of Engineering.

Commissioning Authority responsibilities:

a. Lead the Design Quality Control actions and be responsible for the design integrity, professional design standards, and all design services required.

b. May be a member of the Designer of Record's (DOR) firm if independent of the project's design and construction management.

c. Be responsible for development of the design portion of the QC Plan, the Commissioning Plan, incorporation and maintenance of the approved Design Schedule, and the preparation of DQC Reports, Summary Commissioning Report, and minutes of all design meetings.

d. Participate in the Post Award Kick-Off, all design planning meetings, design presentations, partnering, and QC meetings.

e. Implement the DQC plan and Commissioning Plan and shall remain on staff involved with the project until completion of the project.

f. Be cognizant of and assure that all design documents on the project have been developed in accordance with the Contract, and have been properly coordinated.

g. Develop the submittal register. Coordinate with each DOR to determine what items need to be submitted, and who needs to approve.

h. Coordinate all training issues and validate that the testing and training requirements of this contract are accomplished.

i. Provide QC certification for design compliance.

j. Certify and sign statement on each invoice that all work to be paid to the DOR under the invoice has been completed in accordance with the contract requirements.

k. Prepare weekly DQC Reports that documents the work the design team accomplished that week.

1.4.3 QC Specialists

QC Specialists shall assist and report to the QC Manager and may perform production related duties but must be allowed sufficient time to perform their assigned quality control duties. QC Specialists are required to attend the Coordination and Mutual Understanding Meeting, QC meetings and be physically present at the construction site to perform the three phases of control and prepare documentation for each definable feature of work in their area of responsibility at the frequency specified below.

1.4.3.1 Fire Protection QC Specialist

The Fire Protection QC Specialist shall be a U.S. Registered Fire Protection Engineer (FPE) and shall be an integral part of the Prime Contractor's Quality Control Organization. This FPE shall have no business relationships (owner, partner, operating officer, distributor, salesman, or technical representative) with any fire protection equipment device manufacturers, suppliers or installers for any such equipment provided as part of this project. The Fire Protection Designer of Record may serve as the lead Fire Protection QC Specialist, provided the following qualifications are met.

a. Qualifications/Experience: The FPE shall have obtained their professional registration by successfully completing the Fire Protection Engineering discipline examination. This FPE shall have a minimum of 5 years full time and exclusive experience in every aspect of facility design and construction as it relates to fire protection, which includes, but is not limited to, building code analysis, life safety code analysis, design of automatic detection and suppression systems, passive fire protection design, water supply analysis, and a multi-discipline coordination reviews, and construction surveillance.

b. Area of Responsibility: The FPE is responsible for assuring the proper construction and installation of life safety and fire protection features across all disciplines and trades. The FPE shall be responsible for assuring that life safety and fire protection features are provided in accordance with the design documents, approved construction submittals, and manufacturer's requirements. Examples include, but are not limited to, water distribution systems including fire pumps and fire hydrants, fire resistive assemblies such as spray-applied fire proofing of structural components and fire rated walls/partitions, fire alarm and detection systems, fire suppression and standpipe systems, emergency and exit lighting fixtures, etc.

c. Construction Surveillance: The FPE shall visit the construction site as necessary to ensure life safety and fire protection systems are being constructed, applied, and installed in accordance with the approved design documents, approved construction submittals, and manufacturer's requirements. Frequency and duration of the field visits are dependent upon particular system components, system complexity, and phase of construction. At a minimum, field visits shall occur just prior to installation of suspended ceiling system to inspect the integrity of passive fire protection features and fire suppression system piping, and required performance verification testing of all life safety and fire protection systems identified below and in Part 4.

(1) Preliminary Inspections and Final Acceptance Testing: FPE shall personally witness all preliminary inspections of fire alarm/detection and suppression systems. Once preliminary inspections have been successfully completed, the FPE shall submit a signed certificate to the QC Manager that systems are ready for final inspection and testing. The Naval Facilities Engineering Command Fire Protection Engineer will witness formal tests and approve all systems before they are accepted. The QC Manager shall submit the request for formal inspection at least 15 days prior to the date the inspection is to take place. The QC manager shall provide 10 days advance notice to the Contracting Officer and the activity Fire Inspection Office of scheduled final

inspections.

(2) Final Life Safety/Fire Protection Certification Documentation: The FPE shall provide certification that all life safety and fire protection systems have been inspected and, in the FPE's professional judgment, have been installed in accordance with the contract documents, approved submittals, and manufacturer's requirements. This certification shall summarize all life safety and fire protection features, and shall bear the professional seal of the fire protection engineer.

1.4.3.2 Mechanical QC Specialist

Qualification/Experience in Area of Responsibility	Area of Responsibility	Frequency
Mechanical Inspector, International Conference of Building Officials (ICBO) Certified/ 5 years minimum	Installation and Testing of Boilers	Minimum 3 times a week during installation and full-time during testing
Elevator Inspector, International Conference of Building Officials (ICBO) Certified/ 5 years minimum	Testing of Elevators	Minimum 3 times a week during installation and full-time during testing
Mechanical Testing QC Specialist/Registered Mechanical Engineer, (PE)	Testing of Mechanical Systems	Full-time during testing

1.4.3.3 Soils Testing/Pile Installation and Testing QC Specialists

Provide IBC Special Inspections Certification provided by the following specialist(s):

Qualification/Experience in Area of Responsibility	Area of Responsibility	Frequency
Under Supervision of P.E.	Soil Testing Pile Installation And Testing	See IBC Chapter

1.5 THREE PHASES OF CONTROL

The Three Phases of Control shall adequately cover both on-site and off-site work and shall include the following for each DFOW.

1.5.1 Preparatory Phase

Notify the Contracting Officer at least two work days in advance of each preparatory phase meeting. The meeting shall be conducted by the QC Manager and attended by the Project Superintendent, QC Specialists, and the foreman responsible for the DFOW. The Commissioning Authority shall also attend if required by structural tests and special inspections, as outlined in Chapter 17 of the IBC and the DQC Plan. When the DFOW will be

accomplished by a subcontractor, that subcontractor's foreman shall attend the preparatory phase meeting. Document the results of the preparatory phase actions in the daily Contractor Quality Control Report and in the Preparatory Phase Checklist. Perform the following prior to beginning work on each DFOW:

a. Review each paragraph of the applicable specification sections;

b. Review the Contract drawings;

c. Verify that appropriate shop drawings and submittals for materials and equipment have been submitted and approved. Verify receipt of approved factory test results, when required;

d. Review the testing plan and ensure that provisions have been made to provide the required QC testing;

e. Examine the work area to ensure that the required preliminary work has been completed;

f. Examine the required materials, equipment and sample work to ensure that they are on hand and conform to the approved shop drawings and submitted data;

g. Discuss the specific controls used in construction methods, construction tolerances, workmanship standards, and the approach that will be used to provide quality construction by planning ahead and identifying potential problems for each DFOW; and

h. Review the APP and appropriate Activity Hazard Analysis (AHA) to ensure that applicable safety requirements are met, and that required Material Safety Data Sheets (MSDS) are submitted.

1.5.2 Initial Phase

Notify the Contracting Officer at least two work days in advance of each initial phase. When construction crews are ready to start work on a DFOW, conduct the initial phase with Project Superintendent, the QC Specialists, and the foreman responsible for that DFOW. The Commissioning Authority shall also attend if required by structural tests and special inspections, as outlined in Chapter 17 of the IBC and the DQC Plan. Observe the initial segment of the DFOW to ensure that the work complies with Contract requirements. Document the results of the initial phase in the daily CQC Report and in the Initial Phase Checklist. Repeat the initial phase for each new crew to work on-site, or when acceptable levels of specified quality are not being met. Perform the following for each DFOW:

a. Establish the quality of workmanship required;

b. Resolve conflicts;

c. Ensure that testing is performed by the approved laboratory, and

d. Check work procedures for compliance with the APP and the appropriate AHA to ensure that applicable safety requirements are met.

e. Ensure manufacturer's representative has performed necessary inspections, if required.

1.5.3 Follow-Up Phase

Perform the following for on-going work daily, or more frequently as necessary, until the completion of each DFOW and document in the daily CQC Report:

a. Ensure the work is in compliance with Contract requirements;

b. Maintain the quality of workmanship required;

c. Ensure that testing is performed by the approved laboratory; and

d. Ensure that rework items are being corrected.

1.5.4 Additional Preparatory and Initial Phases

Additional preparatory and initial phases shall be conducted on the same DFOW if the quality of on-going work is unacceptable, if there are changes in the applicable QC organization, if there are changes in the on-site production supervision or work crew, if work on a DFOW is resumed after substantial period of inactivity, or if other problems develop.

1.5.5 Notification of Three Phases of Control for Off-Site Work

Notify the Contracting Officer at least two weeks prior to the start of the preparatory and initial phases.

1.6 COMPLETION INSPECTIONS

The Contractor shall perform the necessary prefinal inspections, compile punchlists, and correct deficiencies. Notify the Contracting Officer 5 calendar days prior to the date a prefinal inspection can be held. Notify the Contracting Officer at least 14 calendar days prior to the date a final acceptance inspection can be held. The Government will perform final inspection to verify that the facility is complete and ready to be occupied. All items previously identified on the prefinal punchlist will have been corrected and acceptable.

1.7 TRAINING

The Commissioning Authority shall provide a comprehensive project-specific Government personnel training program for the systems of the facility specified in the technical specifications of this Contract. The core of this training will be based on manufacturer's recommendations and the operation and maintenance support information (OMSI) provided as a part of this Contract. Training shall include classroom discussion as well as hands on maintenance, replacement of typical components and repair type maintenance training for parts typically replaced or repaired in the field, such as:

1. Domestic water pressure boosting system

2. Plumbing systems, including temperature actuated thermostatic water mixing valve

3. HVAC Systems, including chillers, boilers, heat pumps, air handling equipment, exhaust fans, fan coil units, hot and chilled water pumping system

4. Steam condensate pumps

5. Direct Digital Controls/Space Temperature Controls

6. Electrical systems, including transformers, diesel-electric generator sets, automatic transfer switches, primary switchgear, secondary switchgear, high voltage switchgear, variable frequency drives, and frequency converters

7. Fire protection systems, including fire alarm systems and detection systems

8. Site mechanical utilities, including cathodic protection

9. Site electrical utilities, including substations, transformers, and pad mounted switchgear

10. Wastewater pump systems

Provide each trainee in the course a written training course outline. Submit outline for approval at least 90 calendar days prior to training session. Provide to the Contracting Officer two copies of the training video recording in DVD format. Confirm media format required with the using activity. The recording shall capture, in video and audio, all instructors training presentations including question and answer periods with the trainees.

1.8 DOCUMENTATION

Maintain current and complete records of on-site and off-site QC program operations and activities.

-- End of Section --

CAPITAL IMPROVEMENTS

ENGINEERING & CONSTRUCTION Bulletin

Issue No. 2008-03 **25 September 2008** **Type: Policy**

Subject: **Acceptance Testing of Critical Systems**

Reference: (a) ECB 2007-01 Proper use of Military Construction Funds, 13 October 2006

Enclosure: (1) Roles and Responsibilities (R&R) Matrices

Cancelled: NAVFAC Instruction 12271.1: NAVFAC Total Building Commissioning Policy, dated 23 October 2003

1. Purpose.

To focus NAVFAC's technical oversight of acceptance testing during construction on five critical areas (electrical, fire and life safety, mechanical, roofing, and underwater structures) to ensure the constructed facility performs as intended and meets the needs of the supported commands; to define the use of Post Construction Award Services (PCAS) funding as it applies to the Capital Improvements Business Line (CIBL) in-house acceptance testing and technical support efforts.

2. Background.

NAVFAC has identified five critical areas that have consistently caused problems in facilities delivered to its supported commands. These areas are electrical, fire and life safety, mechanical, roofing systems, and underwater structures. These five critical areas were identified as requiring ongoing, thorough construction technical oversight in support of acceptance testing. A NAVFAC Team of technical experts determined how to apply responsible oversight to these five critical areas using one-half of PCAS funds. Each Team compiled all systems / sub-systems and developed R&R matrices (enclosure (1)). Each matrix identifies responsibilities of each of the contributors to the quality and functionality of the completed project, including the contractor, Facilities Engineering Command's (FEC) Integrated Product Team (IPT) and Facilities Engineering and Acquisition Division (FEAD) technical staff. The matrices served as the basis for determining the level of effort (man hours) to perform the technical support for acceptance testing. The following table shows the format in the R&R matrices. Each heading is provided with a description of each column's intent:

System	Sub-System	Phase	Element	Ktr QC-DOR (Project Req'ts)	FEAD (SIOH)	FEC (PCAS)
Major system grouping	Specific system	Phase of the project where it will occur	The item or task to be accomplished	What actions, if any, need to be taken by the appropriate party? (Indicates funding method)		

The contractor is still responsible for delivering a high quality and properly functioning facility via the Contractor Quality Control (CQC) program and commissioning process (including documentation and training).

3. Policy and Implementation.

The following will apply to the performance of acceptance testing for the five critical areas:

a. This applies to Military Construction (MILCON) and all Special Projects with costs over $750,000 for design-build and design-bid-build contracts.
b. The Project Manager (PM) shall manage, in coordination with the Construction Manager (CM), the project PCAS funds. The PM shall ensure that PCAS funding is used in accordance with reference (a).
c. The average funds available to support the CIBL acceptance testing in-house effort will be one-half the total PCAS funds.
d. Enclosure (1) defines the roles and responsibilities of the contractor, FEC's IPT and FEAD technical staff.
e. While the FEAD will be responsible for managing the overall construction project, the FEC's IPT will be responsible for the technical support for the acceptance testing effort associated with the five critical areas. Technical support from the FEAD can be leveraged as capabilities and resources allow, and must be coordinated between the FEC IPT and FEAD. The support for the five critical areas will be provided by engineers that have been trained and are experienced in that area.
f. The CM will manage the day-to-day coordination with the contractor and coordinate the necessary reach back to the FEC IPT for technical support for acceptance testing.
g. PCAS must be budgeted and included in the project costs. The PCAS costs must be shown in the budget estimate summary sheets (BESS) on the DD 1391.
h. The Public Works Business Line (PWBL) has agreed to designate representatives who are responsible for facility maintenance and sustainment to perform the following:
    i. Participate in the submittal review process by providing comments on submittals for the critical areas.
    ii. Be present for the final inspections and tests.
    iii. Be present for all system training.
    iv. Provide feedback and lessons learned to the FEC CI4.
i. It is recommended that the designated representatives, who are responsible for maintenance and sustainment visit the site during construction to become familiar with the building systems.
j. The efforts in paragraph 3.h above will not be funded using PCAS or supervision, inspection and overhead (SIOH).

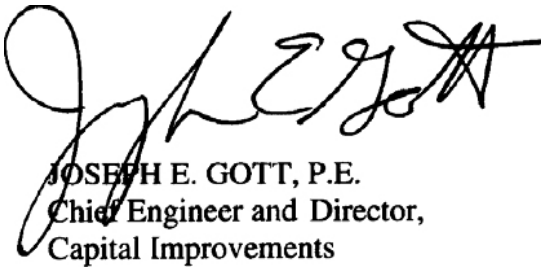

JOSEPH E. GOTT, P.E.
Chief Engineer and Director,
Capital Improvements

Note: This ECB has been coordinated with Headquarters, U.S. Marine Corps (Code LFF).

ELECTRICAL ENGINEERING ROLES and RESPONSIBILITIES

System	Sub-Systems	Phase	Elements	EE QC / DOR (Ktr)	FEAD (SIOH)	FEC (PCAS)
All Systems	**Submittals & Plans**	Pre-Construction	Qualifications of Installer, Shop Drawings, Data Sheets, and Calculations (as applicable)	A	C	S
			QC Plan		A	S
			Performance Verification Plan		A	S
	Certificates & Reports	Construction	Functional Acceptance Test Procedure	A	C	S
			Preliminary Test Reports	A	RA	S
			Final Acceptance Test Reports	A	C	S
Power Generators	**Single Operation Generator Sets**	Test Preparation	Perform fuel oil piping tests	V	C	-
			Perform acceptance checks and tests	V	W	C
			Perform preliminary operations	V	W	C
		Final Test	Test all engine protective shutdown devices	V	—	W
			Test all pre-shutdown alarm devices	V	—	W
			Test crank cycle/terminate relay	V	—	W
			Test automatic and manual operations in all possible scenarios involving loss of utility, return of utility, manual starting, and emergency stop	V	—	W
			Perform load test	V	—	W
	Automatic Transfer Switches	Test Preparation	Perform acceptance checks and tests	V	W	C
		Final Test	Simulate loss of normal power	—	—	W
			Simulate return of normal power	V	—	W
			Simulate loss of emergency power	V	—	W
			Simulate all forms of single-phase conditions	V	—	W
			Verify operation of normal power voltage-sensing relays	V	—	W
			Verify engine start sequence	V	—	W
			Verify time delay upon transfer	V	—	W
			Verify operation of alternate power voltage-sensing relays	V	—	W
			Verify automatic transfer operation	V	—	W
			Verify interlocks and limit switch operation	V	—	W
			Verify time delay and retransfer upon normal power restoration	V	—	W
400-Hertz Solid State Frequency Converter	**All**	Test Preparation	Perform acceptance checks and tests	V	W	C
			Verify equipment nameplate information with specifications and approved shop drawings	V	W	—
			Inspect physical and mechanical condition	V	W	—
			Verify correct equipment grounding	V	W	—
			Perform resistance measurements through all bolted connections	V	W	—
			Perform preliminary operations	V	W	C
		Final Test	Test all control devices	V	—	W
			Test all protective shutdown devices	V	—	W
			Perform load test	V	—	W
			Perform transient tests	V	—	W
			Perform harmonic distortion tests	V	—	W
			Perform automatic line drop compensation test	V	—	W

KEY = A - Approve, R - Review, W - Witness, RA - Receipt Acknowledge, S - Surveilance Review, V- Verification and Testing, C - Copy, QA - Quality Assurance

ELECTRICAL ENGINEERING ROLES and RESPONSIBILITIES

System	Sub-Systems	Phase	Elements	EE QC / DOR (Ktr)	FEAD (SIOH)	FEC (PCAS)
Uninterruptible Power Supply (UPS)	**All**	Test Preparation	Verify ventilation equipment in UPS and battery rooms are operational	V	W	—
			Verify battery cells are filled with electrolyte	V	W	—
			Verify polarity of DC connections and phase rotation of AC connections	V	W	—
			Verify AC power to all equipment	V	W	—
			Verify remote monitors and control wiring	V	W	—
			Verify UPS system and battery system is properly grounded	V	W	—
			Verify operation of emergency shower and eye wash	V	W	—
			Verify control connections between UPS and emergency engine generator signal contacts	V	W	—
			Verify control connections between UPS module and UPS maintenance bypass cabinet	V	W	—
			Perform acceptance checks and tests	V	W	C
		Final Test	Perform load tests	V	—	W
			Perform full-load burn in test	V	—	W
			Perform battery discharge test	V	—	W
			Perform battery performance test	V	—	W
			Perform UPS in conjunction with emergency generator service (if applicable)	V	—	W
Lighting	**Interior Lighting**	Final Test	Verify electronic dimming ballasts operatation over full range of dimming capability without any visually detectable flicker	V	W	—
			Verify occupancy sensors operation	V	W	—
			Verify lighting controls operation	V	W	—
			Verify lighting output levels	V	W	—
	Exterior Lighting	Final Test	Verify photocell aiming and operation	V	W	—
			Verify lighting controls operation	V	W	—
			Verify lighting output levels	V	W	—
Transformers	**Single-Phase Pad-Mounted Transformers**	Factory Routine Tests	Perform resistance measurements, polarity, ratio, no-load losses and excitation current, load losses and impedance voltage, dielectric, leak (liquid-filled), and disolved gas analysis (liquid-filled) tests	—	—	W
		Field Tests	Perform acceptance checks and tests	V	W	C
	Three-Phase Pad-Mounted Transformers	Factory Routine Tests	Perform resistance measurements, polarity, ratio, no-load losses and excitation current, load losses and impedance voltage, dielectric, leak (liquid-filled), and disolved gas analysis (liquid-filled) tests	—	—	W
		Field Tests	Perform acceptance checks and tests	V	W	C
	Secondary Unit Substations	Factory Routine Tests	Perform resistance measurements, polarity, ratio, no-load losses and excitation current, load losses and impedance voltage, and dielectric tests	—	—	W
		Field Tests	Perform acceptance checks and tests	V	W	C
	Primary Unit Substations	Factory Routine Tests	Perform resistance measurements, polarity, ratio, no-load losses and excitation current, load losses and impedance voltage, dielectric, leak (liquid-filled), and disolved gas analysis (liquid-filled) tests	—	—	W
		Field Tests	Perform acceptance checks and tests	V	W	C

KEY = A - Approve, R - Review, W - Witness, RA - Receipt Acknowledge, S - Surveilance Review, V- Verification and Testing, C - Copy, QA - Quality Assurance

ELECTRICAL ENGINEERING ROLES and RESPONSIBILITIES

System	Sub-Systems	Phase	Elements	EE QC / DOR (Ktr)	FEAD (SIOH)	FEC (PCAS)
Switchgear/ Switchboards	**Metal-Clad Switchgear / Switchboards and Busway**	Factory Production Tests	60 Hz dielectric, mechanical operation, electrical operation and control wiring, and ground fault sensing equipment tests	—	—	W
		Test Preparation	Perform acceptance checks and tests	V	W	C
Cable	**Medium-Voltage Cable, Terminations, and Splices**	Test Preparation	Perform acceptance checks and tests	V	W	—
		Field Tests	Perform shield continuity and very low frequency (VLF) tests	V	W	—
SF6 Switch - Padmount	**Medium Voltage Pad-mounted Switches**	Factory Production Tests	60 Hz dielectric, mechanical operation, electrical operation and control wiring, and ground fault sensing equipment tests	—	—	W
		Test Preparation	Perform acceptance checks and tests	V	W	C
Airfield Lighting	**Airfield Lighting Circuits**	Field Tests	Airfield lighting circuits low voltage continuity and high voltage insulation resistance tests	V	W	—
		Field Tests	Airfield lighting circuit operating test	V	W	—
	Counterpoise	Field Tests	Counterpoise system test	V	W	—
	Constant	Field Tests	Perform open circuit protector and load tests	V	W	—
	All	Field Tests	Perform airfield lighting system operation test	V	W	—
Cathodic Protection	**Cathodic Protection by Galvanic Anodes**	Field Tests	Perform non-destructive testing of anodes	V	W	—
			Perform destructive testing of anodes	V	W	—
			Perform base potential tests, insulation joint testing, electrical continuity testing, pipe casing testing, anode-to-soil potential tests, anode output tests, protected potential measurement tests, and interference testing.	V	W	—
			Perform field operation tests.	V	—	W
	Cathodic Protection by Impressed Current	Field Tests	Perform non-destructive testing of anodes	V	W	—
			Perform destructive testing of anodes	V	W	—
			Perform base potential tests, permanent reference electrode calibration, insulation joint testing, electrical continuity testing, rectifier system testing, pipe casing testing, protected potential measurement tests, and interference testing.	V	W	—
			Perform field operation tests.	V	—	W

KEY = A - Approve, R - Review, W - Witness, RA - Receipt Acknowledge, S - Surveilance Review, V- Verification and Testing, C - Copy, QA - Quality Assurance

FIRE PROTECTION ENGINEERING ROLES and RESPONSIBILITIES

System	Sub-Systems	Phase	Elements	FP QC / DOR (Ktr)	FEAD (SIOH)	FEC (PCAS)
All Systems	**Required Submittals**		QC Plan	—	A	S
			Performance Verification Plan	—	A	S
		Test Prep & Preliminary Certifications	Field Visit/Construction Surveillance Reports	—	S	QA
		Final Test Reports &	Final Acceptance Test Reports	A	S	QA or A
			Final Life Safety/Fire Protection Certification	—	S	A
Sprinkler Systems	**Wet Pipe Sprinkler Systems**	Test Preparation	Process/review system submittal (Qualifications of Installer, Shop Drawings, Data Sheets & Calcs)	A	C	S
			Process/review Preliminary Test Reports & Certifications	—	RA	S
			Witness hydrostatic test.	A	C	—
			Witness flush test.	V	W	—
			Visually inspect system for adherence to plan, completeness, and adequacy of installation.	A	QA	QA
			Visually inspect pipe pentrations	A	QA	QA
			Visually inspect sprinklers for location and that they are not painted / taped.	A	QA	QA
			Visually inspect seismic bracing	A	C	QA
			Operate control valves {Other than main service entrance riser}	A	C	QA
			Visually inspect check valve installation	A	C	QA
			Visually inspect test/drain discharge locations	A	C	QA
			Witness backflow preventer forward-flow test (NFPA 13, §16.2.5).	V	W	W
			Inspect/test alarm valve assembly and water service entrance(pipe sleeves, thrust rods, etc.), including valves, flow switch & tamper switches)	V	C	W
			Inspect/test flow control valve assembly	V	C	W
	Additional requirements for Dry Pipe, Preaction - Deluge		Process system submittal (Qualifications of Installer, Shop Drawings, Data Sheets & Calcs)	A	C	S
			Preliminary Test Reports & Certifications	—	RA	S
			Witness hydrostatic test.	A	C	—
			Witness flush test.	V	W	—
		Final Test	Verify Low-point drains are provided	V	—	QA
			Visually inspect air supply and piping	A	S	QA
			Witness backflow preventer test.	V	W	W
			Test high-low pressure air switch operation	V	—	W
			Inspect/Test deluge or dry valve riser assembly (including control valves, alarm switch & tamper switches), and functional operation	A	S	W
			Inspect/test detection and releasing system	See Fire Alarm System		

KEY = A - Approve, R - Review, W - Witness, RA - Receipt Acknowledge, S - Surveillance Review, V- Verification and Testing, C - Copy, QA - Quality Assurance

FIRE PROTECTION ENGINEERING ROLES and RESPONSIBILITIES

System	Sub-Systems	Phase	Elements	FP QC / DOR (Ktr)	FEAD (SIOH)	FEC (PCAS)
Water Distribution	**Fire hydrants, distribution piping, & control valves**	Final Test	Process system submittal (Qualifications of Installer, Shop Drawings, Data Sheets & Calcs)	A	C	—
			Preliminary Test Reports & Certifications	—	RA	S
			Visually inspect all thrust blocks.	A	QA	—
			Witness hydrostatic test.	A	C	—
			Witness flush testing of hydrant	A	C	QA
			Operate all control/isolation valves (each)	V	S	QA
			Operate fire hydrants and check for proper drainage (each)	V	S	QA
	Water storage	Construction	Preliminary Test Reports & Certifications	—	RA	S
			Verify suction piping w/in tank is installed in accordance with design	A	C	S
Pumps for Fire Protection (Water & Foam)	**Pumps & Controllers**		Process system submittal (Qualifications of Installer, Shop Drawings, Data Sheets & Calcs)	A	C	S
			Preliminary Test Reports & Certifications	—	RA	S
		Test Preparation	Visually inspect system for adherence to plan, completeness, and adequacy of installation.	A	QA	QA
		Test Preparation	Witness pump controller functional tests (including automatic transfer switch operation & battery transfer as applicable).	A	QA	W
			Witness flow test to generate performance curve (pressure vs discharge, rpms, amps, shaft alignment)	V	QA	W
		Final Test	Witness automatic and manual starts & stops	V	QA	W
			Verify that controller supervisory signals are received by the fire alarm control panel	V	C	W

KEY = A - Approve, R - Review, W - Witness, RA - Receipt Acknowledge, S - Surveillance Review, V- Verification and Testing, C - Copy, QA - Quality Assurance

FIRE PROTECTION ENGINEERING ROLES and RESPONSIBILITIES

System	Sub-Systems	Phase	Elements	FP QC / DOR (Ktr)	FEAD (SIOH)	FEC (PCAS)
Fire Alarm Systems	**Evacuation / Notification Detection & Releasing Systems.**	Test Preparation & Final Test	Process system submittal (Qualifications of Installer, Shop Drawings, Data Sheets & Calcs)	A	C	S
			Preliminary Test Reports & Certifications	—	RA	S
			Visually inspect system for adherence to plan, completeness, and adequacy of installation. (30,000 SQ. FT.)	A	QA	QA
			Test initiating devices for proper operation. (Activate 15% of smoke or heat detectors with no failures {30,000 sq. ft)/(625 sq. ft/ detector)(0.15)=7}	A	QA	QA
			Test initiating circuits for shorts, ground faults, and general operation	A	C	QA
			Test signaling circuits for shorts, ground faults, and general operation	A	C	QA
			Verify audible and visual devices operate properly and audible devices can be heard throughout the facility	A	C	QA
			Test peripheral devices (door hold opens, etc)	A	C	QA
			Witness functional test of the main control panel	V	C	W
			Test interface with other systems (i.e., preaction, gaseous, etc.)	V	C	W
			Test that correct signals are being sent to the base receiving station	V	C	W
			Test recall for elevators - See "Others - Elevators" {Bldg 2 stories or more}	V	S	W
			Test AHU shut down - See "Others - HVAC"	V	S	W
			Test power shut down - See "Others - {Elevators} Electrical"	V	C	W
	Control Panels used for Releasing Service		Process system submittal (Qualifications of Installer, Shop Drawings, Data Sheets & Calcs)	A	C	S
			Preliminary Test Reports & Certifications	—	RA	S
			Test releasing circuits for shorts, ground faults, and general operation	V	C	W
			Test power shut down - See "Others - Electrical"	V	S	QA
			Test automatic closing of dampers/doors	V	S	W
	Base-Wide Fire Reporting System		Process system submittal (Qualifications of Installer, Shop Drawings, Data Sheets & Calcs)	A	C	S
			Preliminary Test Reports & Certifications	—	RA	S
			Test transmitting devices to ensure the signals are received at the main console **{per bldg}**	V	C	W
			Test the main console for redundancy requirements	V	S	W

KEY = A - Approve, R - Review, W - Witness, RA - Receipt Acknowledge, S - Surveillance Review, V- Verification and Testing, C - Copy, QA - Quality Assurance

FIRE PROTECTION ENGINEERING ROLES and RESPONSIBILITIES

System	Sub-Systems	Phase	Elements	FP QC / DOR (Ktr)	FEAD (SIOH)	FEC (PCAS)
Miscelaneous Extinguishing Systems	**Gaseous Systems**	Final Test	Process system submittal (Qualifications of Installer, Shop Drawings, Data Sheets & Calcs)	A	C	S
			Preliminary Test Reports & Certifications	—	RA	S
			Visually inspect system for adherence to plan, completeness, and adequacy of installation.	A	S	QA
			Verify correct nozzles were installed	A	S	W
			Witness room pressurization test	V	S	W
			Witness full functional test to verify cylinder head functions properly and all control/interface functions operate accordingly.	V	S	W
			Inspect/test detection and releasing system	See Fire Alarm System		
	Wet Chemical & Dry Chemical Systems	Test Prep	Process system submittal (Qualifications of Installer, Shop Drawings, Data Sheets & Calcs)	A	C	S
			Preliminary Test Reports & Certifications	—	RA	S
			Verify piping and nozzles are installed in accordance with manufacturer's listing requirements	A	S	W
		Final Test	Witness discharge test - ensure nozzles are bagged if discharging water in a wet chemical system	V	S	W
			Verify alarm and supervisory signals are sent to the FACP	V	S	W
			Verify power and gas are disconnect when system activates (if applicable)	V	S	W
			Verify exhaust system either continues to run or shuts down depending on listing (if applicable)	V	S	W
	Foam Systems (All types)	Test Preparation	Process system submittal (Qualifications of Installer, Shop Drawings, Data Sheets & Calcs)	A	C	S
			Preliminary Test Reports & Certifications	—	RA	S
			Review test plan	—	C	QA
			Review the contractor's test plan for environmental and other compliance	—	S	QA
			Inspect/test detection and releasing system	See Fire Alarm System		
			Visually inspect system for adherence to plan, completeness, and adequacy of installation. Conduct functional test of entire system. Submit report.	A	QA	QA
			Verify correct foam generators / discharge devices are installed and properly piped	A	—	QA
			Verify correct size pipe and installed properly	A	—	QA
			Verify riser assembly (deluge valve) is installed properly	A	—	QA
		Final Test	Verify strainer has proper mesh	V	QA	W
		Final Test	Conduct performance test to ensure proper setting and operation of foam control valves and discharge devices. *(multiply by the number of risers)*	V	QA	W
			Conduct functional test of each generator, ratio controller, or proportioner. *(multiply by the number of risers)*	—	QA	W

KEY = A - Approve, R - Review, W - Witness, RA - Receipt Acknowledge, S - Surveillance Review, V- Verification and Testing, C - Copy, QA - Quality Assurance

FIRE PROTECTION ENGINEERING ROLES and RESPONSIBILITIES

System	Sub-Systems	Phase	Elements	FP QC / DOR (Ktr)	FEAD (SIOH)	FEC (PCAS)
Passive	Fire / Smoke Barriers IBC Inspections (Section 109)	Preliminary and Final Inspections	Process system submittal (Qualifications of Installer, Shop Drawings, Data Sheets & Calcs)	A	C	S
			Preliminary Test Reports & Certifications	—	RA	S
			Inspect Lath & gypsum board installation	A	QA	QA
			Inspect fire-rated / smoke wall and/or floor penetrations	A	S	QA
			Inspect wall/ceiling/roof joint	A	S	QA
			Inspect/test fire & smoke damper installation and performance	A	S	QA
			Inspect fire doors and frames	A	QA	QA
Life Safety Features	Exit Signs and Emergency Lighting	Preliminary	Verify installed locations of exit signs.	A	S	QA
			Verify installed locations of emergency lighting	A	S	QA
		Final Test	Check performance of emergency lighting systems and battery back-up.	A	S	QA
	Emergency Generators		Check to ensure all life safety features on the emergency generator are provide with power in the required amount of time	A	S	QA
Other Systems	Elevators	Test	Verify elevator re-call to primary floor	A	S	QA
			Verify elevator re-call to alternate floor	A	S	QA
			Test power disconnect upon water flow	V	S	QA
			Verify signal in elevator cab activates	V	S	QA
	Smoke Control / Exhaust Systems	Preliminary Test	Verify smoke exhaust / smoke control system activates via appropriate initiating devices (IBC §1704)	A	S	QA
			Verify location of duct detectors and for proper installation	A	S	QA
		Final Test	Perform operational test to show smoke exhaust / smoke control system functions as designed	V	S	QA
			Special Inspections for smoke control (IBC §1704) (See NFPA 92A & 92B, Chap. 8.)	A	W	W
			Perform operational test to verify detector functions properly and shuts down the correct AHU	V	S	QA
	Electrical	Pre-Test	Verify each detector associated with the electrical equipment disconnects power	A	S	QA
		Final Test	Test power disconnect for associated electronic equipment	V	S	QA

KEY = A - Approve, R - Review, W - Witness, RA - Receipt Acknowledge, S - Surveillance Review, V- Verification and Testing, C - Copy, QA - Quality Assurance

MECHANICAL ENGINEERING ROLES and RESPONSIBILITIES

System	Sub-Systems	Phase	Elements	ME QC / DOR (Ktr)	FEAD (SIOH)	FEC (PCAS)
Energy Supply Systems	**Fuel Oil - ALL**	Field Visit	**Complete System -** Verify contractor provided complete fuel oil system to the facility, including applications and permits	A	QA	—
			Piping - Verify fuel oil piping meets requirements of International Mechanical Code.	A	QA	—
			Testing - Verify oil system testing meets requirements of NFPA 31.	V	W	—
	Fuel Oil - Exterior	Submittal Process	**Piping -** Verify fuel piping is either ASTM A 53 Type E (electric-resistance welded, Grade A or B) black steel; or ASTM A 53 Type S (seamless, Grade A or B) black steel; or API SPEC 5L, seamless, submerged-arc weld or gas metal-arc weld, Grade B, black ste	A	RA	—
			Fuel Pumps - Verify fuel pumps comply with NEMA MG 1, NFPA 70, and are designed for use with hydrocarbon fuels.	A	RA	—
			Fuel Pumps - Verify fuel pumps have a working pressure of 1896 kilopascals (275 psig) at 38 degrees C (100 degrees F).	A	RA	—
			Fuel Meters - Verify fuel meters are continuous duty, positive displacement type, with electronic thermal compensation capability, suitable for outdoor installation.	A	RA	—
			Fuel Meters - Verify fuel meters are designed for use with hydrocarbon fuels and have a working pressure of 1896 kilopascals (275 psig) at 38 degrees C (100 degrees F).	A	RA	—
		Submittal Process/ Field Visit	**Storage Tanks -** Verify aboveground liquid fuel storage tanks are concrete encased or double wall in accordance with UL 142 and UL 2085 with secondary containment and leak monitoring of a capacity to meet the system requirements. Verify overfill/spill con	A	RA/ QA	S
			Dispensing Tanks - Verify Liquid fuel dispensing tanks are concrete encased or double wall in accordance with UL 142 and UL 2085 with secondary containment and leak monitoring of a capacity to meet the system requirements. Verify overfill/spill containme	A	RA/ QA	S
	Fuel Oil - Interior	Submittal Process	**Pumps -** Verify pumps that are not part of the burner assembly are positive dispacement type	A	RA	—
		Field Visit	**Oil Filter -** Verify an oil filter is provided prior to oil entering appliance or pump.	A	QA	QA
		Field Visit	**Drip Legs -** Verify drip legs are provided and properly installed prior to oil entering appliance or pump.	A	QA	—
		Submittal Process	**Storage Tanks -** Verify all storage tanks meet NFPA 31 requirements.	A	RA	—
	Natural Gas - ALL	Field Visit	**Complete System -** Verify contractor provided complete natural gas system to the facility, including applications and permits	A	QA	—
		Field Visit	**Testing -** Verify system was tested at 1.5 times maximum working pressure, but not less than 350 kPa (50 PSI) per NFPA 54	V	W	—

KEY = A - Approve, R - Review, W - Witness, RA - Receipt Acknowledge, S - Surveilance Review, V- Verification and Testing, C - Copy, QA - Quality Assurance

MECHANICAL ENGINEERING ROLES and RESPONSIBILITIES

System	Sub-Systems	Phase	Elements	ME QC / DOR (Ktr)	FEAD (SIOH)	FEC (PCAS)
Energy Supply Systems (continued)	**Natural Gas - Exterior (Contractor installed piping)**	Field Visit	**Piping -** Verify exterior gas piping meets requirements of local natural gas utility	A	QA	—
		Submittal Process	**Piping -** Verify piping meets requirements of ASME B31.8, Gas Transmission and Distribution Piping Systems	A	RA	—
		Submittal Process	**Piping -** Verify the natural gas piping is either ASTM A 53, Type E (electric-resistance welded, Grade A or B) black steel piping or ASTM A 53 Type S (seamless, Grade A or B) black steel piping or ASTM D 2513, Grade PE2406 or PE3408 polyethylene piping an	A	RA	—
		Field Visit	**Meter and Pressure Regulator -** Verify meter and pressure regulator are provided in accordance with local utility requirements.	A	QA	—
		Field Visit	**Piping Identification -** Verify polyethylene plastic tape manufactured specifically for warning and identifying buried utility lines are provided for non-metallic undergound piping systems	A	QA	—
	Natural Gas - Interior	Submittal Process	**Piping -** Verify interior gas piping meets requirements of NFPA 54, National Fuel Gas Code	A	RA	—
	Propane - ALL	Field Visit	**Complete System -** Verify contractor provided complete propane system to the facility, including appropriate applications and permits.	A	QA	—
	Propane - Exterior	Submittal Process	**Piping -** If piping is not provided by propane supplier, verify the propane piping is either ASTM A 53, Type E (electric-resistance welded, Grade A or B) black steel piping or ASTM A 53 Type S (seamless, Grade A or B) black steel piping or ASTM D 2513, Gr	A	RA	—
		Submittal Process	**Fittings -** Confirm Polyethylene fittings meet ASTM D 2683 for socket fittings or ASTM D 2513 for molded butt-fusion fittings	A	RA	—
		Field Visit	**Tank -** Verify propane tank capacity conforms to tank capacity submitted in shop drawings.	A	QA	—
		Submittal Process	**Tank -** If tank is not provided by propane supplier, verify propane tank material and installation comply with NFPA 58.	A	RA	—
		Submittal Process	**Tank -** If tank is not provided by propane supplier, verify propane tank is ASME labeled.	A	QA	—
		Field Visit	**Piping Identiication -** Verify polyethylene plastic tape manufactured specifically for warning and identifying buried utility lines are provided for non-metallic undergound piping systems	A	QA	—

MECHANICAL ENGINEERING ROLES and RESPONSIBILITIES

System	Sub-Systems	Phase	Elements	ME QC / DOR (Ktr)	FEAD (SIOH)	FEC (PCAS)
Energy Supply Systems (continued)	**Propane - Interior**	Field Visit	Verify the propane installation meets the requirements specified in NFPA 58.	A	QA	—
		Submittal Process	**Piping -** Verify standard pipe dimension ratio is not more than 11.5	A	RA	—
	Steam - Exterior Underground	Submittal Process	Confirm the submission of a Certificate of Satisfactory Operation certifying that at least 3 systems installed by the piping system manufacturer within the previous 10 years have and are operating satisfactorily for not less than 5 years.	A	RA	S
		Submittal Process	Confirm the submission of a written certification by the piping system manufacturer that the distribution system installer is technically qualified and experienced in the installation of the system.	A	RA	S
		Submittal Process/ Field Visit	Verify underground steam and condensate piping in separate conduits is direct buried, factory pre-fabricated, pre-insulated, and consist of a steel service pipe with polyurethane insulation and a high-density polyethylene (HDPE) jacket.	A	RA/ QA	—
		Submittal Process/ Field Visit	Confirm piping system fittings and components are factory fabricated and no field insulated fittings are provided.	A	RA/ QA	—
		Field Visit	Verify asbestos cement or plastic conduit piping is not provided.	A	QA	—
		Field Visit	**Piping Insulation -** Verify the piping system insulation thickness is in accordance with contract requirements.	A	QA	—
		Submittal Process	**Isolation Valves -** Verify ASME class 150 isolation valves are provided in manholes for system supply and return lines at take-offs for service to each building .	A	QA	—
		Submittal Process/ Field Visit	**Expansion Loops -** Verify expansion loops are utilized to compensate for piping expansion.	A	RA/ QA	S
		Submittal Process/ Field Visit	**Expansion Anchors -** Verify piping expansion anchors are located outside manholes.	A	RA/ QA	—
		Field Visit	**Manholes -** Verify system manholes are constructed of reinforced, 206.8 bar (3000 psi) concrete. Verify manhole floor and sides are watertight and were made in one monolithic pour. Verify manhole top extends a minimum of 300 mm (6 inches) above grade. V	A	QA	—
		Submittal Process	Verify a sump pit and a vertical sump pump designed for an operating temperature design of 93 degrees C (195 degrees F) minimum are provided in each system manhole.	A	RA	—
		Submittal Process	**Sump Pump - Float Control -** Verify a 2-pole float control is provided for each manhole sump pump.	A	RA	—
		Submittal Process/ Field Visit	**Valves -** For system valves located outside of manholes, verify a cast-iron or ductile-iron valve box and cover of a suitable size are provided. Verify the box cover has the word(s) describing the utility cast on the cover.	A	RA/ QA	—

MECHANICAL ENGINEERING ROLES and RESPONSIBILITIES

System	Sub-Systems	Phase	Elements	ME QC / DOR (Ktr)	FEAD (SIOH)	FEC (PCAS)
Energy Supply Systems (continued)	**Steam - Exterior Aboveground**	Submittal Process	**Piping -** Verify steam piping is either ASTM A 53 Type E (electric-resistance welded, Grade A or B) black steel pipe or ASTM A 53 Type S (seamless, Grade A or B) black steel pipe or, for pipe sizes through 250 mm (9 inches), ASTM A 106 (Grade A or B) black	A	RA	—
		Submittal Process	**Piping -** Verify condensate piping is either ASTM A 53 Type E (electric-resistance welded, Grade A or B) black steel, Weight Class XS (Extra Strong); or ASTM A 53 Type S (seamless, Grade A or B) black steel, Weight Class XS (Extra Strong); or ASTM A 106, G	A	RA	—
		Field Visit	**Piping Insulation -** Verify piping insulation is either fibrous glass, calcium silicate, or cellular glass as indicated in submitted shop drawings. Verify pipe insulation matches existing or surrounding insulation if applicable.	A	QA	—
		Field Visit	**Piping Insulation -** Verify the piping system insulation thickness is in accordance with contract requirements.	A	QA	—
		Field Visit	**Insulation -** Verify insulation is covered with an with aluminum jacket painted to conform with the Base Architectural Plan.	A	QA	—
		Submittal Process/ Field Visit	Verify the use of either MSS SP-58 or MSS SP-69 adjustable supports with insulation protection saddles. Verify roller supports utilize stainless steel axles.	A	RA/ QA	—
		Field Visit	**Support Poles -** Verify support poles are installed with guy wires and necessary hardware.	A	QA	—
		Submittal Process/ Field Visit	**Pipe Expansion -** Verify pipe expansion is compensated by utilizing either expansion loops, guided sliexpansion joints, or flexible ball type expansion joints.	A	RA/ QA	S
	Steam - Interior	Submittal Process	**Steam piping** - Verify is ASTM A106 or A53, Grade B, Schedule 40, black steel, electric-resistance welded or seamless	A	RA	—
		Submittal Process/ Field Visit	**Steam piping** - Verify insulated with mineral fiber or cellular glass insulation with all-purpose jacket	A	RA/ QA	—
		Submittal Process	**Condensate return piping** - Verify is ASTM A106 or ASTM A53, Grade B, Schedule 80, black steel, electric-resistance welded or seamless	A	RA	—
		Submittal Process/ Field Visit	**Condensate return piping** - Verify insulated with mineral fiber or cellular glass insulation with all-purpose jacket	A	RA/ QA	—
		Submittal Process	**Steel pipe fittings** - For piping 50 mm (2 inch) and smaller, verify is ANSI/ASME B16.3 malleable iron screwed fittings or ASME B16.11 socket welding (Class 3000) or ASME B16.11 threaded type (Class 2000)	A	RA	—
		Submittal Process	**Steel pipe fittings** - For piping 63 mm (2-1/2 inch) and larger, verify is ANSI/ASME B16.9 butt-welding fittings or ANSI/ASME B16.5 flanged type	A	RA	—
		Field Visit	**Steam pressure reducing station -** Verify provided for each building	A	QA	—

MECHANICAL ENGINEERING ROLES and RESPONSIBILITIES

System	Sub-Systems	Phase	Elements	ME QC / DOR (Ktr)	FEAD (SIOH)	FEC (PCAS)
nergy Supply Systems (continued)		Submittal Process/ Field Visit	**Steam traps** - Verify steam traps and accessories are in accordance with UFC 3-400-10N	A	RA/ QA	—
		Field Visit	Verify all valves, traps, and PRV's are accessible for service & maintenance	A	QA	—
	Hot Water - Exterior Underground	Submittal Process/ Field Visit	**Piping -** Verify underground hot water supply & return piping in separate conduits is direct buried, factory pre-fabricated, pre-insulated, and consist of a steel service pipe with polyurethane insulation and a high-density polyethylene (HDPE) jacket.	A	RA/ QA	—
		Submittal Process/ Field Visit	Confirm piping system fittings and components are factory fabricated and no field insulated fittings are provided.	A	RA/ QA	—
		Field Visit	Verify asbestos cement or plastic conduit piping is not provided.	A	QA	—
		Submittal Process	The UHDS representative shall be certified in writing by the UHDS manufacturer to be technically qualified and experienced in the installation of the system. Provide a Certificate of Satisfactory Operation certifying that at least 3 systems installed by	A	QA	S
		Field Visit	**Piping Insulation -** Verify the piping system insulation thickness is in accordance with contract requirements.	A	QA	—
		Submittal Process/ Field Visit	**Isolation Valves -** Verify ASME class 150 isolation valves are provided in manholes for system supply and return lines at take-offs for service to each building .	A	RA/ QA	—
		Submittal Process/ Field Visit	**Expansion Loops -** Verify expansion loops are utilized to compensate for piping expansion.	A	RA/ QA	S
		Submittal Process/ Field Visit	**Manholes -** Verify system manholes are constructed of reinforced, 206.8 bar (3000 psi) concrete. Verify manhole floor and sides are watertight and were made in one monolithic pour. Verify manhole top extends a minimum of 300 mm (6 inches) above grade. V	A	RA/ QA	—
		Submittal Process	Verify a sump pit and a vertical sump pump designed for an operating temperature design of 93 degrees C (195 degrees F) minimum are provided in each system manhole.	A	RA	—
		Submittal Process	**Sump Pump - Float Control -** Verify a 2-pole float control is provided for each manhole sump pump.	A	RA	—
		Submittal Process/ Field Visit	**Valves -** For system valves located outside of manholes, verify a cast-iron or ductile-iron valve box and cover of a suitable size are provided. Verify the box cover has the word(s) describing the utility cast on the cover.	A	RA/ QA	—

MECHANICAL ENGINEERING ROLES and RESPONSIBILITIES

System	Sub-Systems	Phase	Elements	ME QC / DOR (Ktr)	FEAD (SIOH)	FEC (PCAS)
Ei	**Hot Water - Exterior Aboveground**	Submittal Process	**Piping -** Verify hot water piping is either ASTM A 53 Type E (electric-resistance welded, Grade A or B) black steel, Weight Class XS (Extra Strong); or ASTM A 53 Type S (seamless, Grade A or B) black steel, Weight Class XS (Extra Strong); or ASTM A 106, Gr	A	RA	—
		Field Visit	**Piping Insulation -** Verify piping insulation is either fibrous glass, calcium silicate, or cellular glass as indicated in submitted shop drawings.	A	QA	—
		Field Visit	**Piping Insulation -** Verify the piping system insulation thickness is in accordance with contract requirements.	A	QA	—
		Field Visit	**Insulation -** Verify insulation is covered with an with aluminum jacket painted to conform with the Base Architectural Plan.	A	QA	—
		Submittal Process/ Field Visit	**Pipe Expansion -** Verify pipe expansion is compensated by utilizing either expansion loops, guided slip expansion joints, or flexible ball type expansion joints.	A	RA/ QA	S
		Submittal Process/ Field Visit	Verify the use of either MSS SP-58 or MSS SP-69 adjustable supports with insulation protection saddles. Verify roller supports utilize stainless steel axles.	A	RA/ QA	—
		Field Visit	**Support Poles -** Verify support poles are installed with guy wires and necessary hardware.	A	QA	—
	Hot Water - Interior	Submittal Process	**Piping** - Verify hot water piping is electric resistance, welded or seamless, schedule 40, black steel pipe conforming to ASTM A53. Piping 100mm (4 inch) and smaller may be ASTM B 88 Type K or L copper.	A	RA	—
		Submittal Process	**Steel fittings** - **For piping 50mm (2 inch) and smaller**, verify provided ANSI/ASME B16.3 malleable iron screwed fittings **OR** ASME B16.11 socket welding (Class 3000) fittings OR ASME B16.11 threaded type (Class 2000)	A	RA	—
		Submittal Process	**Steel fittings** - **For piping 63 mm (2-1/2 inch) and larger**, verify provided ANSI/ASME B16.9 butt-welding fittings **OR** ANSI/ASME B16.5 flanged type	A	RA	—
		Submittal Process	**Copper fittings -** Verify ANSI B16.18 cast bronze solder joint type or ASME/ANSI B16.22 wrought copper solder joint type	A	RA	—

MECHANICAL ENGINEERING ROLES and RESPONSIBILITIES

System	Sub-Systems	Phase	Elements	ME QC / DOR (Ktr)	FEAD (SIOH)	FEC (PCAS)
Energy Supply Systems (continued)		Submittal Process/ Field Visit	**Insulation -** Verify hot water piping insulated with mineral fiber insulation with factory-applied all-purpose jacket	A	RA/ QA	—
		Field Visit	**Isolation valves** - Verify equipment provided with isolation valves for service and repairs	A	QA	—
		Submittal Process/ Field Visit	**Valves -** Verify appropriately sized	A	RA/ QA	—
		Submittal Process/ Field Visit	**Balancing valves -** Verify provided and appropriately sized to balance water flow	A	RA/ QA	QA
		Field Visit	**Appurtenances -** Verify provided (such as air separators, expansion tanks, suction diffusers, strainers, etc)	A	QA	—
		Field Visit	**Test ports -** Verify provided in piping at inlet and outlet of all major system components including boilers, pumps, etc)	A	QA	QA
		Field Visit	Verify all valves and test ports are accessible for service and maintenance	A	QA	—
	Chilled Water & Condenser Water - Exterior Underground	Submittal Process	Verify system provided is direct buried, factory-prefabricated, pre-insulated, chilled water piping systems. Verify all fittings and accessories are designed and factory-fabricated to prevent moisture from entering into the system by manufacturer.	A	RA	S
		Field Visit	Verify backfill and overall installation meets the requirements of the piping system manufacturer.	A	QA	—
		Field Visit	**Isolation Valves -** Verify supply and return line isolation valves are provided at take-offs for service to each building in valve boxes.	A	QA	—
		Submittal Process/ Field Visit	Verify expansion loops are provided to compensate for piping expansion. Verify anchors are provided outside manholes.	A	RA/ QA	S
	Chilled Water & Condenser Water - Exterior Aboveground	Submittal Process	**Piping -** Verify chilled and condenser water piping are either electric resistance welded or seamless Schedule 40 black steel pipe conforming to ASTM A 53 or, for piping 100 mm (4 inch) and smaller, ASTM B 88 Type K or L copper.	A	RA	—
		Submittal Process	If steel piping is used, verify for piping 50 mm (2 inch) and smaller, ANSI/ASME B16.3 malleable iron screwed fittings or ASME B16.11 socket welding (Class 3000) or threaded type (Class 2000) fittings are provided. For piping 63 mm (2-1/2 inch) and large	A	RA	—
		Submittal Process	If copper piping is used, verify ANSI B16.18 cast bronze solder joint fittings or ASME/ANSI B16.22 wrought copper solder joint fittings are provided.	A	RA	—
		Submittal Process/ Field Visit	**Piping Insulation -** Verify piping insulation is either Mineral fiber, Urethane, cellular glass, Faced Phenolic Foam, or Flexible Cellular pipe insulation as indicated in submitted shop drawings.	A	RA/ QA	—

MECHANICAL ENGINEERING ROLES and RESPONSIBILITIES

System	Sub-Systems	Phase	Elements	ME QC / DOR (Ktr)	FEAD (SIOH)	FEC (PCAS)
Energy Supply Systems (continued)		Field Visit	**Piping Insulation -** Verify the piping system insulation thickness is in accordance with contract requirements.	A	QA	—
		Field Visit	**Piping Insulation -** Verify piping insulation is covered with an aluminum jacket.	A	QA	—
		Submittal Process/ Field Visit	Verify the use of either MSS SP-58 or MSS SP-69 adjustable supports with insulation protection saddles. Verify roller supports utilize stainless steel axles.	A	RA/ QA	—
		Field Visit	**Support Poles -** Verify support poles are installed with guy wires and necessary hardware.	A	QA	—
		Submittal Process/ Field Visit	**Pipe Expansion -** Verify pipe expansion is compensated by utilizing either expansion loops, guided slip expansion joints, or flexible ball type expansion joints.	A	RA/ QA	S
	Chilled Water & Condenser Water - Interior	Submittal Process	**Aboveground chilled & condenser water piping -** Verify aboveground chilled water piping is electric resistance welded or seamless schedule 40 black steel pipe conforming to ASTM A 53. Piping 100mm (4 inch) and smaller may be ASTM B 88 Type K or L copper.	A	RA	—
		Submittal Process	**Steel pipe fittings - For piping 50mm (2 inch) and smaller -** Verify provided ANSI/ASME B16.3 malleable iron screwed fittings or ASME B16.11 socket welding (Class 3000) or threaded type (Class 2000).	A	RA	—
		Submittal Process	**Steel pipe fittings - For piping 63mm (2-1/2 inch) and larger -** Verify provided ASME/ANSI B16.9 butt-welding fittings or ASME/ANSI B16.5 flanged type.	A	RA	—
		Submittal Process	**Steel pipe fittings -** Grooved joint pipe coupling systems of appropriate pressure rating are acceptable in lieu of welded or screwed fittings	A	RA	—
		Submittal Process	**Copper fittings -** Verify provided ANSI B16.18 cast bronze solder joint type or ASME/ANSI B16.22 wrought copper solder joint type	A	RA	—
		Field Visit	**Isolation valves -** Verify isolation valves provided on supply and return lines at take-offs for service to each building	A	QA	—
		Field Visit	**Isolation valves -** Verify isolation valves located in valve boxes	A	QA	—
		Submittal Process/ Field Visit	**Insulation -** Verify above-ground chilled water piping insulated with cellular glass insulation. Flexible unicellular insulation may be used on small piping runouts.	A	RA/ QA	—
		Submittal Process/ Field Visit	**Insulation -** Verify above-ground condenser water piping insulated with mineral fiber insulation	A	RA/ QA	—
		Submittal Process/ Field Visit	**Insulation -** Verify all-purpose jacket with vapor retarder provided for above-ground chilled water and condenser piping	A	RA/ QA	—
inued)		Submittal Process/ Field Visit	**Valves -** Verify appropriately sized	A	RA/ QA	—

MECHANICAL ENGINEERING ROLES and RESPONSIBILITIES

System	Sub-Systems	Phase	Elements	ME QC / DOR (Ktr)	FEAD (SIOH)	FEC (PCAS)
Energy Supply Systems (conti		Submittal Process/ Field Visit	**Balancing valves -** Verify provided and appropriately sized to balance water flow	A	RA/ QA	QA
		Submittal Process/ Field Visit	**Relief valves -** Verify provided and appropriately sized	A	RA/ QA	—
		Field Visit	**Test ports -** Verify test ports provided inpiping at inlet and outlet of all major system components including chillers, pumps, etc	A	QA	QA
		Field Visit	Verify all valves and test ports are accessible for service and maintenance	A	QA	—
	AHU's - ALL	Field Visit	**DDC Sensors -** Confirm location of DDC sensors (temp, SP, Freeze, High pressure SP, AFM), if required	A	QA	QA
		Field Visit	**Smoke Detectors -** Confirm location of smoke detectors (if over 2000 cfm)	A	QA	QA
		Field Visit	**Testing - Filters -** Confirm filters are clean prior to testing	A	QA	QA
		Field Visit	**Filters -** Confirm filters are installed	—	—	—
		Field Visit	**Belts -** Confirm belt tightness and alignment	A	QA	QA
		Field Visit	**Coils -** Confirm all coils are clean	A	QA	QA
		Field Visit	**Vibration Isolators -** Confirm vibration isolators installed according to contract docs and unit secured	A	QA	QA
		Field Visit	**Damper -** Confirm damper operation and assembly tightness	A	QA	QA
		Field Visit	**Motor -** Confirm motor size (HP), voltage, amperage, and rpm	A	QA	QA
		Submittal Process	**Fans -** Verify provided have AMCA 210 certified fans with AMCA seal	A	QA	—
		Field Visit	**Fans -** Confirm fan rpm and rotation direction	A	QA	QA
		Field Visit	**OA Intake Plenum -** Confirm OA intake plenum configuration provides for drainage	A	QA	QA
		Field Visit	**AFM -** Confirm air flow monitoring station location in conformance with manufacturer requirements	A	QA	QA
		Field Visit	**Size -** Confirm unit matches schedule req	A	QA	QA
		Submittal Process/ Field Visit	**Fan bearings -** Verify fan bearings were greased (if req) and have min average life of 200,000 hours at design operating conditions	A	RA/ QA	—
		Field Visit	**Birdscreens -** Verify birdscreens provided for outdoor inlets and outlets	A	QA	QA
		Field Visit	Verify all filter and access doors are accessible for service and maintenance	A	QA	—
		Field Visit	Verify provided are modular construction, double wall AHU's with min of 25mm (1 inch) casing insulation	A	QA	—
		Submittal Process	Verify provided have ARI 430 certified fans and ARI certified coils	A	RA	—

MECHANICAL ENGINEERING ROLES and RESPONSIBILITIES

System	Sub-Systems	Phase	Elements	ME QC / DOR (Ktr)	FEAD (SIOH)	FEC (PCAS)
Equipment & Components (continued)		Submittal Process/ Field Visit	**Drain pan -** Verify provided has stainless steel, positive draining condensate drain pan	A	RA/ QA	—
		Submittal Process	**For 100% OA units -** Verify capability provided for cooling, heating, dehumidification, and reheat	A	RA	—
		Submittal Process/ Field Visit	**Ultraviolet disinfection system -** Verify central station ahu's provided with an ultraviolet c-band (UVC) disinfection system for mold, bacteria, and odor control in each air handler that has a chilled water or DX cooling coil	A	RA/ QA	—
		Submittal Process/ Field Visit	**Ultraviolet disinfection system -** Verify irradiation emitters and fixtures installed in sufficient quantity and in such an arrangement so as to provide an equal distribution of UVC energy on the coil and in the drain pan	A	RA/ QA	—
		Submittal Process/ Field Visit	**Ultraviolet disinfection system -** Verify the UVC energy produced has the lowest possible reflected and shadowed losses (To maintain energy efficiency)	A	RA/ QA	—
		Submittal Process/ Field Visit	**Ultraviolet disinfection system -** For energy efficiency, verify power supplies are of the high efficiency electronic type and matched to the emitter	A	RA/ QA	—
		Submittal Process/ Field Visit	**Ultraviolet disinfection system -** For intensity, verify the minimal UVC energy striking the leading edge (if nstalled upstream) or trailing edge (if installed downstream) of all the coil fins is not less than 820 uW/cm2 at the closest point and through pl	A	RA/ QA	—
		Submittal Process/ Field Visit	**Ultraviolet disinfection system -** Verify equal amounts strike the drain pan, either directly or indirectly through reflection	A	RA/ QA	—
		Submittal Process/ Field Visit	**Ultraviolet disinfection system -** For installation, verify emitters and fixtures are installed at right angles to the conforming lines of the coil fins, such that through incident angle reflection, UVC energy bathes all surfaces of the coil and drain pan	A	RA/ QA	—
		Submittal Process/ Field Visit	**Ultraviolet disinfection system -** Verify one complete set of spare bulbs supplied	A	RA/ QA	—
	AHU's - Split System	Submittal Process	Verify provided is factory assembled, packaged AHU rated in accordance with ARI 210/240 or ARI 340/360	A	RA	—
		Field Visit	Verify matching components provided are from the same manufacturer	A	QA	—
	AHU's - Rooftop	Submittal Process/ Field Visit	Verify provided is factory packaged unit in accordance with ARI 430 and suitable for outdoor installation	A	RA/ QA	—
		Field Visit	**Roof Curb -** Verify provided with manufacturer's roof curb	A	QA	—

MECHANICAL ENGINEERING ROLES and RESPONSIBILITIES

System	Sub-Systems	Phase	Elements	ME QC / DOR (Ktr)	FEAD (SIOH)	FEC (PCAS)
nent & Components (continued)	**Roof Curbs**	Field Visit	**Mounting Surface -** Confirm fan or unit mounting surface is parallel to the horizon, not the roof deck if sloped	A	QA	—
		Field Visit	**Waterproofing -** Confirm curb has been flashed properly and seal to the roofing material (no leaks) (waterproofing)	A	QA	—
		Field Visit	**Lightning Rods -** Confirm lightning rods have been attached to units and run to ground	A	QA	—
		Field Visit	**Insulation -** Confirm roof curb is insulated	A	QA	—
		Field Visit	**Size -** Confirm curb is the same size or smaller as the unit being placed on it (tight fit)	A	QA	—
	Fans - ALL	Submittal Process/ Field Visit	Verify fans are AMCA 210 certified with AMCA seal	A	RA/ QA	—
		Submittal Process	**Fan bearings -** Verify fan bearings have min average life of 200,000 hours at design operating conditions	A	RA	—
		Field Visit	**Rotation -** Confirm rotation and alignment	A	QA	QA
		Field Visit	**Belts -** Confirm belt tightness (if provided)	A	QA	QA
		Field Visit	**Motor -** Confirm HP, voltage, amperage	A	QA	QA
		Field Visit	**Size -** Confirm size matches schedule req	A	QA	QA
		Field Visit	Verify fans are accessible for service and maintenance	A	QA	
		Field Visit	**Birdscreens -** Verify bird screens provided for outdoor inlets and outlets	A	QA	QA
		Field Visit	**DDC -** Verify fans provided with means for verifying operation via DDC system	A	QA	QA
	Exhaust Fans (Roof)	Field Visit	**Roof Curb -** Confirm lag bolted to roof curb	A	QA	QA
		Field Visit	**Dome Top -** Confirm dome top is secured	A	QA	QA
		Field Visit	**Type -** Verify centrifugal fans provided	A	QA	
	In-line Fans	Field Visit	**Vibration Isolators -** Confirm hangers & isolation devices	A	QA	QA
		Field Visit	**Flex Connection -** Confirm flexible connection to ductwork	A	QA	QA
		Field Visit	**Speed Controller -** Confirm speed controller installation (if provided)	A	QA	QA
		Field Visit	**Access Panel -** Confirm access panel located properly	A	QA	QA
		Field Visit	**Type -** Verify centrifugal fans provided	A	QA	—
	Wall Fans	Field Visit	**Type -** Verify wall fans provided are propeller fans with fan guards	A	QA	—
		Field Visit	**Type -** Verify wall fans provided are centrifugal fans with backdraft dampers and wall bracket	A	QA	—
	Bathroom Fan	Submittal Process/ Field Visit	Verify provided are UL 507 and UL-Listed, Home Ventilating Institute (HVI) certified, and with AMCA seal for ceiling installation	A	RA/ QA	—

KEY = A - Approve, R - Review, W - Witness, RA - Receipt Acknowledge, S - Surveilance Review, V- Verification and Testing, C - Copy, QA - Quality Assurance

MECHANICAL ENGINEERING ROLES and RESPONSIBILITIES

System	Sub-Systems	Phase	Elements	ME QC / DOR (Ktr)	FEAD (SIOH)	FEC (PCAS)
Equipm	**Range Hoods**	Submittal Process/ Field Visit	Verify provided are UL 507 and UL-Listed, with AMCA seal	A	RA/ QA	—
		Submittal Process/ Field Visit	**Light -** Verify provided with light over stove	A	RA/ QA	—
		Submittal Process	Verify min fan capacity is 160 cfm with max sound level of 5.6 sones	A	RA	—
	Louvers & Hoods - ALL	Submittal Process	**Louver rating** - Verify louvers bear AMCA ratings seal for air performance and water penetration in accordance with AMCA 500 and AMCA 511	A	RA	—
		Submittal Process/ Field Visit	**Construction** - Verify hoods and louvers constructed of anodized aluminum alloy or stainless steel	A	RA/ QA	
		Submittal Process/ Field Visit	**Birdscreens** - Verify provided for louvers and hoods	A	RA/ QA	QA
	Intake Hood (Roof)	Submittal Process/ Field Visit	**Type -** Confirm type as specified	A	RA/ QA	QA
		Field Visit	Confirm top is secured	A	QA	QA
		Submittal Process/ Field Visit	**Size -** Confirm size matches schedule req (free area)	A	RA/ QA	QA
	OA Intake Louvers (Wall)	Submittal Process/ Field Visit	**Type -** Confirm type as specified	A	RA/ QA	QA
		Submittal Process/ Field Visit	**Size -** Confirm size matches schedule req (free area)	A	RA/ QA	QA
		Submittal Process/ Field Visit	Confirm waterproof (when req) and velocity when water carry-over occurs	A	RA/ QA	QA
		Field Visit	**Intake Plenum -** Confirm intake plenum is sloped back to louver or drain has been provided	A	QA	QA
		Field Visit	**Damper -** Confirm opposed blade damper with actuator has been provided	A	QA	QA
		Field Visit	**AFM -** Confirm air flow monitoring type louver has been provided, if req	A	QA	QA

MECHANICAL ENGINEERING ROLES and RESPONSIBILITIES

System	Sub-Systems	Phase	Elements	ME QC / DOR (Ktr)	FEAD (SIOH)	FEC (PCAS)
Equipment & Components (continued)	**Ductwork**	Field Visit	**Construction -** Except as specified herein, verify ductwork constructed, braced, reinforced, installed, supported, and sealed per SMACNA standards	A	QA	QA
		Field Visit	Verify all dampers are accessible for service and maintenance	A	QA	—
		Field Visit	Confirm general construction conforms to contract documents	A	QA	QA
		Field Visit	Confirm correct pressure rating of ductwork has been conformed to SMACNA	A	QA	QA
		Field Visit	Confirm ductwork has been sealed in accordance with specified seal class	A	QA	QA
		Field Visit	**VAV inlet -** Confirm minimum straight duct is 6 duct diameters and same size as VAV terminal inlet	A	QA	QA
		Field Visit	Confirm DALT allowables are met	A	QA	QA
		Submittal Process/ Field Visit	**Access Doors -** Confirm access doors have been provided before every elbow with turning vanes	A	RA/ QA	QA
		Submittal Process/ Field Visit	**Access Doors -** Confirm access doors provided at appropriate locations	A	RA/ QA	QA
		Field Visit	**Flexible duct** - Verify insulated flexible duct used only to adapt to minor offsets for connections to air distribution devices	A	QA	QA
		Submittal Process	**Flexible duct** - Verify is UL 181 listed and per SMACNA DCS with minimum R value of 4	A	RA	—
		Field Visit	**Flexible duct** - Verify maximum length is 2 meters (6 feet)	A	QA	QA
		Field Visit	**Flexible Duct -** Confirm, where flexible ductwork is specified, that the length of flex ductwork is provided to the max req length or less and is supported properly with no abrupt turns (ie: as straight as possible)	A	QA	QA
		Field Visit	**Flexible connectors** - Verify provided between fans and ducts	A	QA	QA
		Submittal Process/ Field Visit	**Damper -** Confirm balancing damper at branch take-off's, not at diffuser neck	A	RA/ QA	QA
		Submittal Process/ Field Visit	**Damper -** Confirm balancing damper construction conforms to the specified seal class	A	RA/ QA	QA
		Submittal Process/ Field Visit	**Damper -** Confirm discharge damper installed on VAV terminal discharge, if req	A	RA/ QA	QA
		Field Visit	**Damper -** Confirm control damper type and location along with actuator type	A	QA	QA
		Submittal Process	**Dampers** - Verify conforms to SMACNA DCS	A	RA	—
		Submittal Process	**Fire dampers** - Verify are rated per UL 555	A	RA	—
		Submittal Process	**Fire dampers** - Verify are dynamic type rated for closure against a moving airstream	A	RA	—

System	Sub-Systems	Phase	Elements	ME QC / DOR (Ktr)	FEAD (SIOH)	FEC (PCAS)
ent & Components (continued)		Submittal Process/ Field Visit	**Fire dampers** - Verify do not intrude into air stream when in open position	A	RA/ QA	—
		Submittal Process	**Smoke dampers** - Verify are rated per UL 555S	A	RA	—
		Submittal Process/ Field Visit	**Elbows** - Confirm correct elbow type (ie: double wall turning vane, 1.5 radius curved, etc)	A	RA/ QA	QA
		Field Visit	**Bracing** - Confirm proper bracing of high pressure ductwork in accordance with SMACNA	A	QA	QA
		Field Visit	**Filters** - Confirm access to filter rack for ease of filter change out in duct mounted assemblies	A	QA	QA
		Submittal Process/ Field Visit	**Insulation** - Confirm ductwork insulated properly (ext batt, hard, int lined, double wall insulated, etc)	A	RA/ QA	QA
		Field Visit	**Insulation** - Inspect vapor barrier of insulation	A	QA	—
		Field Visit	**Hangers** - Confirm proper duct hangers have been utilized in accordance with spec req	A	QA	QA
		Field Visit	**Vibration Isolators** - Confirm the use of vibration isolation material at unit connection to ductwork free of holes (no leakage)	A	QA	QA
		Submittal Process	**Sound attenuators** - Verify fabricated sound attenuators reduces the rated sound pressure level of the fan down to at least 65 decibels in the 250 Hz (third octave band) center frequency by using a reference sound source calibrated in decibels of sound pow	A	RA	—
		Submittal Process/ Field Visit	**Sound attenuators** - Verify pressure drop does not exceed 157 Pa (0.63 inch of water)	A	RA/ QA	QA
	VAV Boxes - ALL	Submittal Process	Verify units are pressure-independent type and rated per ARI 880	A	QA	—
		Field Visit	**Primary air valve** - Verify not allowed to fully shut-off	A	QA	QA
		Field Visit	**Heating coil** - Verify each box provided with heating coil unless not required by space reheat or heating	A	QA	—
		Field Visit	Verify all VAV box control panels are accessible	A	QA	
		Field Visit	**Electronic controls** - Verify are provided	A	QA	QA
	VAV Terminal Box (Fan-Powered)	Submittal Process	**Type** - Verify units are pressure-independent, fan powered, rated per ARI 880, and UL listed	A	QA	—
		Field Visit	**Filters** - Confirm filter installed and clean	A	QA	QA
		Field Visit	Confirm ductwork on primary inlet is installed with 6 straight duct diameters the same size as the inlet	A	QA	QA
		Submittal Process/ Field Visit	**Dampers** - Confirm discharge damper has been provided and/or coordinated with sheet metal contractor	A	QA	QA
		Field Visit	Confirm fan size & primary inlet sized in accordance with contract documents	A	QA	—
		Field Visit	**Primary Air Valve** - Confirm max/min setting of primary air valve	A	QA	QA
		Field Visit	**Primary air valve** - Verify not allowed to fully shut-off	A	QA	QA

MECHANICAL ENGINEERING ROLES and RESPONSIBILITIES

System	Sub-Systems	Phase	Elements	ME QC / DOR (Ktr)	FEAD (SIOH)	FEC (PCAS)
Equipme		Field Visit	**Size** - Confirm size matches schedule req	A	QA	QA
		Field Visit	**Motor** - Confirm HP, voltage, and amperage of fan motor	A	QA	QA
		Field Visit	**Heating coil** - Verify each box provided with heating coil, if required	A	QA	—
		Field Visit	**Reheat Coils** - Confirm reheat coil size, if req	A	QA	—
		Field Visit	**Reheat Coils** - Confirm reheat coil is piped properly	A	QA	QA
		Field Visit	**Sensors** - Confirm discharge temp sensor provided, if req	A	QA	QA
		Field Visit	Confirm hangers have provisions for vibration isolation	A	QA	QA
		Field Visit	**Electronic controls** - Verify provided with speed controller, discharge volume control damper(s), and return/recirculation air frame and filter	A	QA	QA
		Submittal Process	**Insulation** - Verify in accordance with ASHRAE 90.1	A	RA	—
	VAV Terminal Box (Shut Off)	Field Visit	Confirm ductwork on primary inlet is installed with 6 straight duct diameters the same size as the inlet	A	QA	QA
		Field Visit	**Primary Air Valve** - Confirm max and min setting of primary air valve	A	QA	QA
		Field Visit	**Reheat Coils** - Confirm reheat coil size, if req	A	QA	
		Field Visit	**Reheat Coils** - Confirm reheat coil in piping properly	A	QA	QA
		Field Visit	**Sensors** - Confirm discharge temp sensor provided, if req	A	QA	QA
		Field Visit	Confirm hangers have provisions for vibration isolation	A	QA	QA
		Field Visit	**Size** - Confirm box size matches schedule req	A	QA	QA
	DX VAV Units	Submittal Process	**Finish** - If indicated in ESR Section D30, verify anti-corrosion coating provided is immersion applied, baked phenolic, or other approved coating. Field applied coatings not acceptable.	A	QA	—
		Submittal Process/ Field Visit	**Direct expansion equipment** - Verify is specifically designed and manufactured for VAV applications	A	RA/ QA	—
		Submittal Process/ Field Visit	**Equipment** - Verify from the same manufacturer (central air handling units, VAV boxes/ zone dampers, and zone controls)	A	RA/ QA	—
		Field Visit	**Evaporator coils** - Verify airflow through evaporator coils is not modulated	A	QA	—
		Field Visit	**Zone control damper units** - Verify duct mounted zone control damper units provided with integral control box designed for use with DX VAV packaged systems	A	QA	—
		Submittal Process/ Field Visit	**Air diffusers** - Verify self-modulating air diffusers are not used	A	RA/ QA	—
	Condensing Units	Submittal Process/ Field Visit	**Finish** - If indicated in ESR Section D30, verify anti-corrosion coating provided is immersion applied, baked phenolic, or other approved coating. Field applied coatings not acceptable.	A	RA/ QA	—
d)		Submittal Process	**Air conditioner** - Verify air-cooled, split system air conditioner provided with ducted air distribution	A	QA	—

MECHANICAL ENGINEERING ROLES and RESPONSIBILITIES

System	Sub-Systems	Phase	Elements	ME QC / DOR (Ktr)	FEAD (SIOH)	FEC (PCAS)
Equipment & Components (continued)		Submittal Process	**Construction and rating** - Verify units are factory assembled, designed, tested, and rated in accordance with ARI 210/ 240 or ARI 340/ 360	A	QA	—
		Submittal Process/ Field Visit	**Clearance** - Verify manufacturer's minimum recommended clearance around condensing units is provided	A	RA/ QA	QA
		Field Visit	**Refrigerant piping size** - Verify is per manufacturer's recommendations	A	QA	—
	Heat Pumps - Ground Source	Submittal Process/ Field Visit	**Finish** - If indicated in ESR Section D30, verify anti-corrosion coating provided is immersion applied, baked phenolic, or other approved coating. Field applied coatings not acceptable.	A	RA/ QA	—
		Submittal Process	**Construction and rating** - Verify units are factory assembled, designed, tested, and rated in accordance with ARI 330	A	QA	—
		Submittal Process	**Heat exchanger** - Verify connected to heat exchanger by closed loop ground source vertical well field	A	RA	—
		Submittal Process/ Field Visit	**Well field** - Verify design and installation of each well field comply with IGSHPA and ASHRAE standards	A	RA/ QA	—
	Heat Pumps - Water Source	Submittal Process/ Field Visit	**Finish** - If indicated in ESR Section D30, verify anti-corrosion coating provided is immersion applied, baked phenolic, or other approved coating. Field applied coatings not acceptable.	A	RA/ QA	—
		Submittal Process	**Construction and rating** - Verify units are factory assembled, designed, tested, and rated in accordance with ARI 210/ 240 or ARI 340/ 360	A	QA	—
	Heat Pumps - Air to Air	Submittal Process/ Field Visit	**Finish** - If indicated in ESR Section D30, verify anti-corrosion coating provided is immersion applied, baked phenolic, or other approved coating. Field applied coatings not acceptable.	A	RA/ QA	—
		Submittal Process	**Heat pumps** - Verify air-cooled, split system heat pumps provided with ducted air distribution	A	RA/ QA	—
		Submittal Process	**Construction and rating** - Verify units are factory assembled, designed, tested, and rated in accordance with ARI 210/ 240 or ARI 340/ 360	A	QA	QA
		Field Visit	**Clearance** - Verify manufacturer's minimum recommended clearance around condensing units is provided	A	QA	—
		Field Visit	**Refrigerant piping size** - Verify is per manufacturer's recommendations	A	QA	QA
		Field Visit	**Insulation** - Verify provided for refrigerant piping suction lines and condensate drain	A	QA	—
	Condensate Return Units	Submittal Process/ Field Visit	Verify has floor-mounted receiver and duplex pump unit	A	RA/ QA	—

MECHANICAL ENGINEERING ROLES and RESPONSIBILITIES

System	Sub-Systems	Phase	Elements	ME QC / DOR (Ktr)	FEAD (SIOH)	FEC (PCAS)
Equipment & Components (continued)	**Equipment Thermal Insulation**	Submittal Process/ Field Visit	**Insulation** - Verify insulation provided for hot and chilled water pumps and equipment as suitable for the temperature and service fit as closely as possible to equipment. May be rigid block, semi-rigid board, or flexible unicellular insulation.	A	RA/ QA	QA
			Vapor retarder - Verify provided for chilled water applications	A	QA	—
	Auxilliary Equipment	Submittal Process/ Field Visit	**Steam-to-hot-water converter** - Verify provided as required for application	A	RA/ QA	—
		Submittal Process	**Heat exchangers** - Verify factory assembled u-tube units provided constructed in accordance with ASME BPVC for steam or hot water. For hot water, plate type heat exchangers may be provided.	A	RA	—
	Furnaces	Submittal Process/ Field Visit	**Construction** - Confirm provided furnace is UL-listed, factory assembled, self-contained, and forced circulation	A	RA/ QA	QA
		Submittal Process/ Field Visit	**Electronic ignition system** - Verify provided	A	RA/ QA	—
		Submittal Process/ Field Visit	**Gas furnace rating** - Confirm unit is design certified by AGA and GAMA efficiency rating certified for gas furnaces.	A	RA/ QA	—
		Submittal Process/ Field Visit	**Oil furnace rating** - Confirm unit meets requirements for NFPA 31 for oil furnaces.	A	RA/ QA	—
		Submittal Process/ Field Visit	**Cooling coil** - Verify provided, if necessary	A	RA/ QA	—
	Unit Ventilators	Submittal Process/ Field Visit	Verify unit is a factory assembled unit ventilator capable of up to 100% OA ventilation and UL-Listed	A	RA/ QA	—
	Unit Heaters	Submittal Process/ Field Visit	See D302004 for gas fired unit heaters	A	RA/ QA	—
	Unit Heaters-Steam	Submittal Process/ Field Visit	Verify provided is UL-Listed and factory assembled	A	RA/ QA	—
	Unit Heaters - Hot Water	Submittal Process/ Field Visit	Verify provided is UL-Listed and factory assembled	A	RA/ QA	—
	Unit Heaters - Cabinet	Submittal Process/ Field Visit	Verify provided is UL-Listed and factory assembled	A	RA/ QA	—

MECHANICAL ENGINEERING ROLES and RESPONSIBILITIES

System	Sub-Systems	Phase	Elements	ME QC / DOR (Ktr)	FEAD (SIOH)	FEC (PCAS)
	Fuel-Fired Unit Heaters - Gas	Submittal Process/ Field Visit	Verify meets requirements for ANSI Z83.8 and AGA label	A	RA/ QA	—
		Submittal Process/ Field Visit	**Discharge louver** - Verify each heater equipped with individually adjustable package discharge louver	A	RA/ QA	QA
		Submittal Process/ Field Visit	**Thermostat** - Verify provided	A	RA/ QA	QA
	Fuel-Fired Unit Heaters - Infrared	Submittal Process/ Field Visit	Verify meets requirements for ANSI Z83.8 and AGA label	A	RA/ QA	—
	Unit Heaters - Electric	Submittal Process/ Field Visit	Verify provided are factory assembled, UL-1025	A	RA/ QA	—
	Heaters - Baseboard	Submittal Process/ Field Visit	Verify provided are factory assembled, UL-1042	A	RA/ QA	—
	Heaters - Wall	Submittal Process/ Field Visit	Verify provided are factory assembled, UL-1025, cabinet heaters	A	RA/ QA	—
	Heaters - Infrared	Submittal Process/ Field Visit	Verify provided are factory assembled, UL-Listed and labeled heaters	A	RA/ QA	—
	Fin Tube Radiators & Convectors	Submittal Process	Verify fin tube radiators and convectors provided with copper tubes and aluminum fins	A	RA	—
		Submittal Process	**Control Valves -** Verify control valves provided are normally open, spring return	A	RA/ QA	QA
	Duct Heater	Submittal Process/ Field Visit	Verify provided is factory assembled, UL-Listed heater	A	RA/ QA	—
		Field Visit	Verify adequate duct length is provided per manufacturer's recommendations upstream & downstream	A	QA	—
		Submittal Process/ Field Visit	Verify control cabinet and heating coil provided	A	RA/ QA	—
	Pumps - ALL	Submittal Process/ Field Visit	Verify provided are centrifugal circulating pumps with motor, motor starter, and motor enclosure conforming to the appropriate NEMA standards	A	RA/ QA	—
		Field Visit	**Insulation -** Verify pumps used for hot service and chilled water service are insulated	A	QA	QA

MECHANICAL ENGINEERING ROLES and RESPONSIBILITIES

System	Sub-Systems	Phase	Elements	ME QC / DOR (Ktr)	FEAD (SIOH)	FEC (PCAS)
Equipment & Components (continued)	**Pumps - Base-mounted**	Field Visit	Confirm size and nameplate data matches schedule req	A	QA	QA
		Field Visit	Verify voltage service matches nameplate	A	QA	QA
		Field Visit	Verify provided are single-stage end suction pumps suitable for chilled, condenser, and hot water heating systems	A	QA	QA
		Field Visit	**Isolation Base -** Confirm isolation base is provided where req	A	QA	QA
		Field Visit	**Insulation -** Confirm insulation enclosure is provided where req	A	QA	QA
		Field Visit	Confirm pressure taps, gages, and shutoffs have been provided in the specified locations	A	QA	QA
		Field Visit	**Balancing Valves -** Confirm the balancing valves have been provided in accordance with manufacturers recommendations and/or in accordance with the appropriate contract document detail	A	QA	QA
		Field Visit	**Balancing Valves -** Confirm balancing valves provided with proper clearances	A	QA	QA
		Field Visit	**Rotation -** Verify rotation direction is correct	A	QA	QA
		Field Visit	**Suction diffusers -** Verify suction diffusers provided on base-mounted pumps	A	QA	QA
	Pumps - In-line	Field Visit	**Location -** Confirm location is correct(ie: in accordance with the contract documents)	A	QA	QA
		Field Visit	Verify constructed of manufacturer's standard materials suitable for chilled, condenser, and hot water heating systems	A	QA	QA
		Field Visit	Confirm voltage provided is correct	A	QA	QA
		Field Visit	**Valve Arrangement -** Confirm valve arrangement around the pump is correct	A	QA	QA
		Field Visit	**Balancing Valve -** Confirm balancing valve has been provided in accordance with the contract documents, if req	A	QA	QA
		Field Visit	**Balancing Valve -** Confirm balancing valves provided with proper clearances	A	QA	QA
	Diffusers, Registers, & Grilles	Field Visit	Confirm location, size, and type have been provided in accordance with the contract documents	A	QA	QA
		Field Visit	**Dampers -** Confirm branch balancing dampers have been provided and dampers, if any, provided with the air device are in the wide open position	A	QA	QA
		Field Visit	**Finish** - Verify are factory-finished	A	QA	—
		Field Visit	**Exterior and exposed edges** - Verify are rolled, or otherwise stiffened and rounded	A	QA	—
	Pipe Sleeves	Field Visit	Verify pipe sleeves provided at each wall and floor penetration	A	QA	—
		Field Visit	Verify sleeves are of a material suitable to protect the carrier pipe (2 pipe sizes larger) and sealed with an appropriate flexible material	A	QA	—

MECHANICAL ENGINEERING ROLES and RESPONSIBILITIES

System	Sub-Systems	Phase	Elements	ME QC / DOR (Ktr)	FEAD (SIOH)	FEC (PCAS)
Equipment & Components (continued)		Submittal Process/ Field Visit	**Fire Stopping -** In fire rated walls, verify fire stopping provided inaccordance with IBC	A	RA/ QA	—
	Piping Identification	Field Visit	Verify piping provided with identification labels or stencil names or code letters for piping systems in clearly visible letters and symbols	A	QA	—
		Field Visit	Verify arrow-shaped markings provided to indicate direction of flow	A	QA	QA
	Piping - Condensate Drain	Submittal Process/ Field Visit	Verify condensate drain piping provided is ASTM B 88, Type M or L, hard drawn copper	A	RA/ QA	—
	Piping	Field Visit	**Flushing -** Confirm/ witness pipe flushing (make sure water is clear prior to putting final chemicals into water system)	V	W	—
		Field Visit	**Strainers -** Confirm start-up strainer has been removed from **all** strainers (hang at location)	A	QA	—
		Field Visit	**Air Vents -** Confirm air vents are at specified locations and are auto type, if req	A	QA	QA
		Submittal Process/ Field Visit	**Pressure Relief Valves -** Confirm pressure relief valves are sized properly and installed where specified	A	RA/ QA	QA
		Field Visit	Confirm make-up water pressure setting is sufficient for facility (adjust if req for pressure req at highest point	A	QA	QA
		Field Visit	**Expansion Tanks -** Where diaphragm expansion tanks are provided, confirm tank pressure is set in accordance with nameplate	A	QA	QA
		Field Visit	Confirm valve arrangements for each unit coil are as specified on the contract documents	A	QA	QA
		Field Visit	Confirm all valve clearance req's, manufacturer, and/or contract have been adhered to	A	QA	QA
		Field Visit	**Layout -** Confirm piping layout conforms to the contract documents (physically walk all pipe runs to make sure there are no cross connections)	A	QA	QA
		Field Visit	Confirm traps have been provided on condensate lines per the contract documents	A	QA	
		Field Visit	Confirm slope of condensate lines meets spec req	A	QA	
		Field Visit	**Supports -** Confirm piping supported properly (ie: hangers, saddles, seismic (if req))	A	QA	QA
		Field Visit	**Insulation -** Confirm pipe insulated with specified insulation and vapor barrier is intact	A	QA	QA
		Submittal Process/ Field Visit	**Fittings -** Confirm dialectric fittings have been provided where piping of dissimilar metals connect	A	RA/ QA	—
		Field Visit	Confirm condensate piping from equip has been run to floor drains, if req	A	QA	QA
		Field Visit	**Identification -** Confirm piping is marked properly with water type and direction of flow	A	QA	QA
		Field Visit	Confirm provisions have been made in the piping arrangement at each coil for isolation of flow and ease of coil removal	A	QA	QA

MECHANICAL ENGINEERING ROLES and RESPONSIBILITIES

System	Sub-Systems	Phase	Elements	ME QC / DOR (Ktr)	FEAD (SIOH)	FEC (PCAS)
Components (continued)		Field Visit	Confirm steam piping relief valve has been piped to the exterior of the building in a safe location to personnel	A	QA	QA
		Field Visit	Confirm hazard warning and/or hot surface signage is in place at steam piping, equip. (This also applies to hot water systems)	A	QA	—
		Field Visit	**Flow Meters -** Confirm location of flow meters meets factory req for straight, unobstructed inlet and outlet piping	A	QA	QA
	Chillers	Field Visit	**Leaving Water Temp -** Confirm the leaving chilled water temp is below temp specified for terminal equip to compensate for pump heat gain (approx 1.8F/1.0C) (chiller leaving should **never** be same as temp req at terminal unit)	A	QA	QA
		Submittal Process/ Field Visit	Confirm piping/valve arrangement matches contract documents and balancing valve and flow monitoring device have been provided in accordance with manufacturers req and/or detail	A	RA/ QA	QA
		Submittal Process/ Field Visit	**Decoupler -** Confirm decoupler leg is tied into chilled return piping before entering chilled water return header (for multiple chillers)	A	RA/ QA	QA
		Field Visit	Confirm piping arrangement has allotment for access to the cooling and condensing bundles	A	QA	QA
		Field Visit	**Flow Switch -** Confirm flow switch has been provided to protect the chiller from low or lack of flow	A	QA	QA
		Submittal Process/ Field Visit	Confirm BACNET compatable (if req in contract docs) and that the connection has been made to the DDC control system	A	RA/ QA	QA
	Chiller Systems - Closed Circuit Coolers	Submittal Process	**Construction and rating** - Confirm provided is factory assembled conforming to NFPA 214	A	RA	—
		Submittal Process	**Fire hazard rating** - Verify fire hazard rating for plastic impregnated materials does not exceed 25	A	RA	—
		Submittal Process	**Certification** - Verify Cooling Technology Institute 201 certification of tower capability and performance is provided	A	RA	—
		Submittal Process	**Cooler performance** - Verify meets or exceeds that listed in ASHRAE 90.1	A	RA	—
		Submittal Process/ Field Visit	**Hardware** - Verify stainless steel hardware provided	A	RA/ QA	—
		Submittal Process	**Vibration cutout switch** - Verify interlocked with fan motor	A	RA	—
		Submittal Process	**Fan motors** - Verify 2-speed or adjustable frequency drive fan motors provided	A	RA	—
		Field Visit	**Safety** - Verify OSHA safety requirements for stairs and handrails are met	A	QA	—

MECHANICAL ENGINEERING ROLES and RESPONSIBILITIES

System	Sub-Systems	Phase	Elements	ME QC / DOR (Ktr)	FEAD (SIOH)	FEC (PCAS)
Equipment &	**Chiller Systems - Water Cooled Chillers**	Submittal Process	**Construction and rating** - Verify self-contained chiller provided meeting requirements of ARI 550/590-98	A	RA	—
		Field Visit	**Control panel** - Verify provided with manufacturer's standard controls and protection circuits	A	QA	—
		Submittal Process/ Field Visit	**DDC system** - If DDC system required in project, verify control interface provided for remote monitoring of chiller's operating parameters, functions, and alarms from DDC control system central workstation	A	RA/ QA	QA
		Submittal Process	**Automatic capacity-reduction system** - Verify provided for stable operation from 100 to 10 percent of full load capacity	A	RA	—
	Chiller Systems - Air Cooled	Submittal Process	**Construction and rating** - Verify provided air-cooled chillers are type indicated in Project Program and meet requirements of ARI 550/590-98	A	RA	—
		Submittal Process	**Control panel** - Verify provided with manufacturer's standard controls and protection circuits	A	RA	—
		Submittal Process/ Field Visit	**DDC System** - If DDC system required in project, verify control interface provided for remote monitoring of chiller's operating parameters, functions, and alarms from DDC control system central workstation	A	RA/ QA	QA
		Submittal Process	**Reciprocating chillers** - Verify minimum of four stages of unloading provided at 25% per stage minimum	A	RA	—
		Submittal Process	**Reciprocating chillers** - Verify provided with hot gas bypass	A	RA	—
		Submittal Process	**Head pressure control** - Verify provided for cold temperature operation	A	RA	—
		Submittal Process/ Field Visit	**Freeze protection** - Verify provided for chiller and piping	A	RA/ QA	QA
		Submittal Process/ Field Visit	**Condenser coils** - Verify provided are copper tube with aluminum fins unless specified otherwise	A	RA/ QA	QA
		Submittal Process/ Field Visit	**Condenser coils** - If condenser coil coatings indicated in ESR Section D30, verify provided with copper tube/ copper fin construction or immersion applied, baked phenolic, or other approved coating. Field applied coatings not acceptable.	A	RA/ QA	QA
		Submittal Process/ Field Visit	**Condenser coils** - Verify condenser coils provided with manufacturer's optional louvered covers or hail guards for protection against vandalism, debris, or hail	A	RA/ QA	—
	Cooling Tower	Field Visit	Confirm tower size HP, voltage per contract docs	A	QA	QA
		Submittal Process/ Field Visit	Confirm tower constructed in accordance with specs (ie: galvanized, stainless steel, fiber-glass)	A	RA/ QA	QA
		Submittal Process/ Field Visit	**Sump** - Confirm height of cooling tower sump is above intake of condenser water pumps (min of 3 to 4 feet)	A	RA/ QA	QA

MECHANICAL ENGINEERING ROLES and RESPONSIBILITIES

System	Sub-Systems	Phase	Elements	ME QC / DOR (Ktr)	FEAD (SIOH)	FEC (PCAS)
Equipment & Components (continued)		Submittal Process/ Field Visit	Confirm return line to tower has trap leg below well unless the by-pass is piped directly to cooling tower well	A	RA/ QA	QA
		Field Visit	**Overflow -** Confirm tower well overflow is low enough to prevent the well from overflowing	A	QA	QA
		Field Visit	**Make-up Float -** Confirm tower well make-up float setting shuts of prior to water level reaching the top of the overflow	A	QA	QA
		Field Visit	**Fan Rotation -** Confirm tower fan rotation is correct	A	QA	QA
		Field Visit	**Well Heater -** Confirm tower well heater is installed, if req	A	QA	QA
		Field Visit	**Shut-off Valve -** Confirm tower shut-off valve has been installed in proper location, if req	A	QA	QA
		Field Visit	**Fan Discharge -** Confirm tower fan discharge is unobstructed from above	A	QA	QA
		Field Visit	**Heat Trace -** Confirm tower piping above grade is heat traced, if req	A	QA	QA
		Submittal Process	**Construction and rating** - Confirm provided is factory assembled conforming to NFPA 214	A	RA	—
		Submittal Process	**Fire hazard rating** - Confirm fire hazard rating for plastic impregnated materials does not exceed 25	A	RA	—
		Submittal Process	**Certification** - Verify Cooling Technology Institute 201 certification of tower capability and performance is provided	A	RA	—
		Submittal Process	**Cooling tower performance** - Verify meets or exceeds that listed in ASHRAE 90.1	A	RA	—
		Submittal Process/ Field Visit	**Construction** - Verify construction is as indicated in ESR Section D30 with fill material of PVC formed sheets	A	RA/ QA	—
		Submittal Process/ Field Visit	**Hardware** - Verify stainless steel hardware provided	A	RA/ QA	—
		Submittal Process	**Vibration cutout switch** - Verify interlocked with fan motor	A	QA	—
		Submittal Process	**Fan motors** - Verify 2-speed or adjustable frequency drive fan motors provided	A	QA	—
		Submittal Process/ Field Visit	**Work platforms** - Verify provided at all locations in tower that require periodic maintenance	A	RA/ QA	
		Submittal Process/ Field Visit	**Isolation valves** - For multi-cell installations, verify isolation valves provided on inlets and outlets of each cell	A	RA/ QA	—
	Fan Coil Units	Field Visit	Confirm size and location in accordance with contract docs	A	QA	QA
		Field Visit	**Filter Access -** Confirm filter accessibility	A	QA	QA
		Field Visit	Confirm vibration isolation provided for on hangers and at ductwork connection	A	QA	QA
		Field Visit	Confirm installation of auxilliary drain pan (if req) along with respective condensate drain piping	A	QA	QA

KEY = A - Approve, R - Review, W - Witness, RA - Receipt Acknowledge, S - Surveilance Review, V- Verification and Testing, C - Copy, QA - Quality Assurance

MECHANICAL ENGINEERING ROLES and RESPONSIBILITIES

System	Sub-Systems	Phase	Elements	ME QC / DOR (Ktr)	FEAD (SIOH)	FEC (PCAS)
Equipment & Components (continued)		Field Visit	Confirm valves arranged properly including the straight pipe diameters req before and after the balancing valve	A	QA	QA
		Submittal Process/ Field Visit	**Speed Controller -** Confirm speed controller has been provided, if req in contract docs	A	RA/ QA	QA
		Field Visit	**Fan Access -** Confirm fan access is accessible by maintenance staff	A	QA	QA
		Field Visit	Confirm unit tagging has been provided	A	QA	—
		Field Visit	Confirm operational	A	QA	—
		Submittal Process/ Field Visit	**Sensors -** Confirm leaving air temp sensor has been provided	A	RA/ QA	QA
		Submittal Process	Verify provided are UL-Listed, factory assembled and tested fan coils, ARI 440, and ARI certified	A	QA	—
	Thru Wall Classroom Terminal Units	Field Visit	Confirm size and location in accordance with contract docs	A	QA	QA
		Field Visit	Confirm operational	A	QA	—
		Field Visit	Confirm piping arrangement meets contract docs req's	A	QA	QA
	Packaged Thru Wall Units	Submittal Process	Verify provided is factory assembled air conditioner or heat pump and rated in accordance with ARI 310 or ARI 380 and ARI certified	A	RA	—
		Submittal Process	Verify provided unit includes heat and operates under the standard unit controls (Not sure if worded correctly, D305006 1.4)	A	RA	—
		Submittal Process	**Wall Sleeve -** Verify unit designed to allow ease of maintenance by use of a wall sleeve	A	RA	QA
		Submittal Process/ Field Visit	**Condensate Removal -** Verify provided unit includes internal condensate removal (condensate shall not be externally drained)	A	RA/ QA	QA
	Room Air Conditioners	Submittal Process	Verify provided is factory assembled air conditioner or heat pump and rated in accordance with AHAM RAC-1	A	RA	—
		Submittal Process/ Field Visit	Verify auxiliary electric heat included and operates under the standard unit controls	A	RA/ QA	QA
		Submittal Process	Verify provided unit is AHAM certified or listed in AHAM DCRAC	A	RA	—
	Computer Room Units	Field Visit	Confirm size and location	A	QA	QA
		Field Visit	Confirm all features have been provided	A	QA	QA
		Field Visit	Confirm water connection to humidifier	A	QA	QA
		Field Visit	**Fan Rotation -** Confirm fan rotation	A	QA	QA
		Submittal Process	If computer room unit req'd, verify DOR utilized UFGS Spec section 23 81 23.00 20 (Computer Room Air Conditioning Units) for the project spec and submitted the edited spec section as part of the design submittal for the project	A	RA	—
	Boilers	Field Visit	Confirm size and location	A	QA	—
		Field Visit	**Stack -** Confirm stack material and arrangement meet contract doc req's	A	QA	QA

KEY = A - Approve, R - Review, W - Witness, RA - Receipt Acknowledge, S - Surveilance Review, V- Verification and Testing, C - Copy, QA - Quality Assurance

MECHANICAL ENGINEERING ROLES and RESPONSIBILITIES

System	Sub-Systems	Phase	Elements	ME QC / DOR (Ktr)	FEAD (SIOH)	FEC (PCAS)
		Field Visit	**Stack -** Confirm stack above roof does not touch roof curb and guy wires have been provided	A	QA	QA
		Field Visit	**Stack -** Confirm stack type is per contract docs and the height above the parapet and/or building meets code req's	A	QA	QA
		Field Visit	Confirm fuel train meets contract docs and code req's with no leaks	A	QA	QA
		Submittal Process/ Field Visit	**Make-up Air -** Confirm adequate make-up air for the boiler(s) has been provided under positive pressure to the room	A	RA/ QA	QA
		Field Visit	**Relief Valve -** Confirm relief valve setting and operation	A	QA	—
		Field Visit	**DDC -** Confirm boilers have been interfaced with the DDC system	A	QA	QA
		Field Visit	Confirm pump/piping arrangement meets contract docs including circulation pump, if req	A	QA	QA
		Submittal Process/ Field Visit	Confirm boiler sequencing panel has been provided by the boiler manufacturer, if req in the contract docs	A	RA/ QA	QA
	Boilers - Hot Water	Submittal Process	**Load capacity** - Verify boiler type provided meets building load capacity as indicated in ESR Section D30, if required	A	RA	—
		Submittal Process/ Field Visit	**Construction and rating** - Verify boiler designed, tested, and installed per ASME CSD-1 (Controls and Safety Devices) and ASME BPVC (Boiler and Pressure Vessel Code)	A	RA/ QA	—
		Submittal Process/ Field Visit	**Construction** - Verify boiler meets requirements of UL 795, ANSI Z83.3, and ASME CSD	A	RA/ QA	—
		Submittal Process/ Field Visit	**Burners** - Confirm provided are make, model, and type certified and approved by manufacturer of provided boiler	A	RA/ QA	—
		Submittal Process/ Field Visit	Verify burner controls and flame safety equipment conform to either ASME CSD-1 or NFPA 58 as dictated by input	A	RA/ QA	—
		Submittal Process/ Field Visit	**Boiler controls** - Verify are mounted on a single control panel mounted on the burner or separate from the burner (includes operating switches, indicating lights, gages, alarms, motor starters, fuses, and circuit elements of the control system). If separa	A	RA/ QA	—
		Submittal Process/ Field Visit	**Trim** - Verify boiler trim complies with ASME BPVC SEC IV, ASME CSD-1, and additional appurtenances as specified herein	A	RA/ QA	—
		Submittal Process/ Field Visit	**Pressure gages** - Confirm provided have scale equivalent to 1.5 times the outlet water pressure on supply water piping and return water piping	A	RA/ QA	—
		Submittal Process/ Field Visit	**Thermometers - Piping** - Confirm provided have scale equivalent to 1.5 times the outlet water temperature on supply water piping and return water piping	A	RA/ QA	—
		Field Visit	**Drain valve** - Verify provided and piped to floor drain	A	QA	—

MECHANICAL ENGINEERING ROLES and RESPONSIBILITIES

System	Sub-Systems	Phase	Elements	ME QC / DOR (Ktr)	FEAD (SIOH)	FEC (PCAS)
Equipment & Components (continued)		Submittal Process/ Field Visit	**Air vent valve** - Verify provided with screwed connection, stainless steel disk, and stainless steel seats to vent entrapped air	A	RA/ QA	—
		Submittal Process	**Boiler stack** - Verify provided boiler stack insulated in accordance with manufacturer's recommendations and conform to NFPA 211, or pre-manufactured multi-wall stacks provided complying with NFPA 54 or NFPA 58 and UL-listed	A	RA	—
		Submittal Process/ Field Visit	**Thermometer - Flue gas** - Verify provided and mounted in flue gas outlet	A	RA/ QA	—
		Field Visit	**Cleaning** - Verify boiler(s) cleaned in accordance with ASME Boiler and Pressure Vessel Code and manufacturer's recommendations prior to startup	A	QA	—
		Field Visit	**Testing** - Verify services are furnished of an engineer or technician approved by the boiler manufacturer for installation, startup, and operational and safety testing	V	W	W
		Field Visit	**Testing** - Verify boiler demonstrates proper operability of combustion control, flame safeguard control, and safety interlocks	V	W	W
	Boilers - Steam		**Confirm meets same requirements specified for hot water boilers except as follows:**			
		Submittal Process/ Field Visit	**Pressure gage** - Confirm provided have scale equivalent to 1.5 times the outlet water pressure on boiler feedwater supply piping and condensate return water piping	A	RA/ QA	—
		Submittal Process/ Field Visit	**Pressure gage** - Confirm provided boiler steam pressure gage has scale equivalent to 1.5 times the boiler rated working pressure	A	RA/ QA	—
		Submittal Process/ Field Visit	**Thermometers - Piping** - Confirm provided have scale equivalent to 1.5 times the outlet water temperature on boiler feedwater piping and return water piping	A	RA/ QA	—
	Insulation - Condensate Drain	Field Visit	**Insulation** - Verify condensate drain piping insulated with flexible cellular insulation	A	QA	—
	Insulation	Field Visit	Verify all ductwork provided with external thermal insulation	A	QA	—

MECHANICAL ENGINEERING ROLES and RESPONSIBILITIES

System	Sub-Systems	Phase	Elements	ME QC / DOR (Ktr)	FEAD (SIOH)	FEC (PCAS)
Equipment & Components (continued)		Field Visit	Verify all ductwork in concelaed spaces insulated with blanket flexible mineral fiber	A	QA	—
		Field Visit	Verify ductwork in mechanical Rooms and exposed locations insulated with rigid mineral fiber insulation	A	QA	—
		Field Visit	Verify insulation provided with factory applied all-purpose jacket with integral vapor retarder	A	QA	—
		Field Visit	In exposed locations, verify jacket provided with white surface suitable for painting	A	QA	—
		Submittal Process/ Field Visit	Verify flame spread/smoke developed rating for all insulation does not exceed 25/ 50	A	RA/ QA	—
		Submittal Process	Verify minimum insulation thickness does not violate minimum required by ASHRAE 90.1	A	RA	—
		Field Visit	Verify the backs of all supply air diffusers insulated with blanket flexible mineral fiber insulation	A	QA	QA
	VFDs	Submittal Process/ Field Visit	Verify are factory-assembled VFD drive control systems for variable speed control	A	RA/ QA	QA
		Submittal Process/ Field Visit	Verify all AHU and pump VFD's are from same manufacturer	A	RA/ QA	QA
		Submittal Process/ Field Visit	Verify each VFD provided includes motor starter, motor disconnects, and controls as required for a complete system	A	RA/ QA	QA
		Submittal Process/ Field Visit	Verify VFD units provided are UL-Listed and comply with the National Electric Code	A	RA/ QA	—
		Submittal Process/ Field Visit	Verify the following accessories were provided: Disconnect switch, Control circuit transformer with primary and secondary fuses, Manual bypass, System hand-off-auto switch with provisions for remote start/stop of the system, System initialized light, Run	A	RA/ QA	QA
	Air Separators	Submittal Process/ Field Visit	**For hot and chilled water** - Verify provided are ASME rated air separators with tangential inlet and outlet connections and automatic air vent	A	RA/ QA	—
	Solids Separators	Submittal Process/ Field Visit	Verify provided are centrifugal solids separators with automatic drain in open systems.	A	RA/ QA	—
	Expansion Tanks	Submittal Process/ Field Visit	For hot and chilled water - Verify provided are ASME rated expansion tanks with polypropylene or butyl diaphragm or compression tanks as indicated in UFC 3-400-10N.	A	RA/ QA	—
	Make-Up Water Station	Field Visit	Verify station consists of a water pressure-reducing valve, filter, and relief valve in the make-up water line to the chilled and hot water systems to maintain the operating pressure	A	QA	—
		Field Visit	Verify a 20mm (3/4 inch) globe valve by-pass provided around the pressure reducing station	A	QA	—
		Field Visit	Verify a reduced pressure backflow preventer provided upstream of the by-pass	A	QA	—

KEY = A - Approve, R - Review, W - Witness, RA - Receipt Acknowledge, S - Surveilance Review, V- Verification and Testing, C - Copy, QA - Quality Assurance

System	Sub-Systems	Phase	Elements	ME QC / DOR (Ktr)	FEAD (SIOH)	FEC (PCAS)
ent & Components (continued)	**Glycol Make-Up Station**	Submittal Process/ Field Visit	If required, verify a glycol make-up system provided to maintain system proper operating mixture	A	RA/ QA	—
	Chemical Treatment	Submittal Process/ Field Visit	If required, verify chilled and hot water systems provided with automatic chemical treatment system for the control of pH, scale formation, and corrosion inhibition	A	RA/ QA	—
		Field Visit	Verify shot-type feeders provided for manual chemical feed	A	QA	—
		Submittal Process	Verify feeders rated for use with pressures up to 900 kPa (130 PSI) (gage)	A	RA	—
		Submittal Process/ Field Visit	Verify condenser water systems provided with automatic chemical treatment systems that monitor conductivity, pH, etc, and provide for water metering and bleed-off	A	RA/ QA	—
		Submittal Process/ Field Visit	Verify chemicals provided are in accordance with EPA and equipment manufacturer's recommendations	A	RA/ QA	—
	System Flushing	Field Visit	Verify hydronic systems flushed thoroughly prior to system startup	A	QA	—
	Heat Tape	Submittal Process/ Field Visit	Verify heat tape provided is UL-Listed, and self-regulating	A	RA/ QA	—
		Submittal Process/ Field Visit	Verify heat tape provided on piping subject to freezing	A	RA/ QA	QA
	Terminal & package Units	Submittal Process/ Field Visit	Where required in ESR Section D30, verify anti-corrosion coating provided on the casing and both the condenser and evaporater coils to protect against salt air damage	A	RA/ QA	—
		Submittal Process/ Field Visit	Verify anti-corrosion coating is immersion applied, baked phenolic or other approved coating (Field applied coatings are not acceptable)	A	RA/ QA	—
	Seismic Design	Submittal Process	Verify provided inaccordance with UFC 3-400-10N, Mechanical Engineering	A	RA	—
	Energy Recovery Wheel (Enthalpy Wheel)	Field Visit	Verify provided is a total energy (enthalpy) type energy recovery wheel (heat wheel)	A	QA	—
		Submittal Process/ Field Visit	**Media -** Verify media is aluminum or a lightweight polymer coated with a corrosion resistance finish (Etched or oxidized surfaces are not acceptable)	A	RA/ QA	—
		Submittal Process/ Field Visit	Verify heat transfer surfaces are coated with a non-migrating (permanently bonded) absorbent specifically developed for the selective transfer of water vapor	A	RA/ QA	—
		Submittal Process	Verify equal sensible and latent recovery efficiencies are documented through a certification program conducted per ASHRAE 84 and ARI 1060	A	RA	—

System	Sub-Systems	Phase	Elements	ME QC / DOR (Ktr)	FEAD (SIOH)	FEC (PCAS)
Equipme		Submittal Process/ Field Visit	Verify energy recovery wheel provided with insulating housing of double wall construction, rotor seals specifically designed to limit cross-contamination, and a rotation detector	A	RA/ QA	—
		Field Visit	Verify the rotation detector alarms the HVAC control system if rotation stops	A	QA	—
		Field Visit	**Filter Access -** Verify filter sections are readily accessible for maintenance	A	QA	QA
	Heat Pipes	Submittal Process	Verify provided are factory fabricated, assembled and tested heat pipes with counter-flow arrangement	A	RA	—
		Submittal Process	Verify are provided with hermitically sealed, seamless aluminum tube cores with extended surfaces	A	RA	—
		Submittal Process	Verify heat exchanger frame constructed of not less than 16-gage galvanized steel and fitted with intermediate tube supports and flange connections	A	RA	—
		Submittal Process	Verify tube end covers and a partition of galvanized steel provided to separate exhaust and supply air streams without cross-contamination	A	RA	—
		Submittal Process	**Refrigerant -** Verify refrigerant used as the working fluid (Type I refrigerants are not allowed)	A	RA	—
	Exterior Piping Manholes	Submittal Process/ Field Visit	**Manholes -** Verify system manholes are constructed of reinforced, 206.8 bar (3000 psi) concrete. Verify manhole floor and sides are watertight and were made in one monolithic pour. Verify manhole top extends a minimum of 300 mm (6 inches) above grade. V	A	RA/ QA	—
		Submittal Process	Verify a sump pit and a vertical sump pump designed for an operating temperature design of 93 degrees C (195 degrees F) minimum are provided in each system manhole.	A	RA	—
		Submittal Process	**Sump Pump - Float Control -** Verify a 2-pole float control is provided for each manhole sump pump.	A	RA	—
	Exterior Piping Cathodic Protection	Field Visit	If underground steel piping is installed, verify a cathodic protection system is provided.	A	QA	—
		Submittal Process	If a cathodic protection system is provided, verify the system was designed by a National Association of Corrosion Engineers (NACE) certified Cathodic Protection Engineer and they supervised, inspected and tested the installation and performance of the ca	A	QA	QA
		Field Visit	Verify the test stations were post mounted and placed at the manhole or nearby building and test stations were provided at each end of each cathodically protected section.	A	QA	—
	DDC		Verify one of the following provided as directed in ESR Section D30			
		Submittal Process	A) Verify Direct Digital Controls (DDC) provided to comply with UFGS Section 23 09 54.00 20, Direct Digital Control Systems	A	RA	—

MECHANICAL ENGINEERING ROLES and RESPONSIBILITIES

System	Sub-Systems	Phase	Elements	ME QC / DOR (Ktr)	FEAD (SIOH)	FEC (PCAS)
Equipment & Components (continued)		Submittal Process	A) Verify DOR utilized UFGS Spec Section 23 09 54.00 20, Direct Digital Control Systems, for the project spec, and submitted the edited spec section as part of the design submittal for the project	A	RA	—
		Submittal Process/ Field Visit	B) Verify a partial DDC system provided that communicates with the existing DDC system	A	RA/ QA	—
		Submittal Process	B) Notwithstanding any other provisions of this contract, no other product will be acceptable other than that indicated in ESR Section D30	A	RA	—
		Submittal Process/ Field Visit	B) Verify the system has stand alone digital controllers, a communication network, and a workstation computer with control software (Pneumatic controllers and components are not acceptable)	A	RA/ QA	—
		Submittal Process	B) Verify all 120-volt wiring complies with NFPA 70	A	RA	—
		Submittal Process/ Field Visit	B) Verify all 24-volt wiring complies with the IMC and terminal device manufacturer's recommendations	A	RA/ QA	—
	DDC - Equipment Controllers	Submittal Process/ Field Visit	Verify DDC hardware are UL-916 rated	A	RA/ QA	—
		Submittal Process/ Field Visit	Verify controllers used in a distributed control manner	A	RA/ QA	QA
		Submittal Process/ Field Visit	Verify controllers are stand alone with an internal clock and modem	A	RA/ QA	QA
		Submittal Process	Verify the total number of I/O hardware points do not exceed 48 in any controller	A	RA	QA
		Submittal Process	Verify sufficient memory provided for each controller to support required control, communication, trends, alarms, and messages	A	RA	QA
		Submittal Process/ Field Visit	Verify communications ports provided for controller to controller, on-site interface, remote workstation interface, and telecommunications interface	A	RA/ QA	QA
	DDC - Electronic Controls	Submittal Process/ Field Visit	If required, verify programmable thermostats provided with built in keypads for scheduling of day and night temps with two setback periods per day	A	RA/ QA	QA
		Submittal Process/ Field Visit	Verify independent summer and winter programs provided	A	RA/ QA	QA
		Submittal Process/ Field Visit	Verify thermostats have temporary and manual override of schedule and battery backup	A	RA/ QA	QA
	All Submittals	Submittal Process	All equipment and controls hardware reviewed by A/E	A	RA	RA
	DALTS - Submittals	Submittal Process	TAB contractor qualifications & certification	RA	RA	A
		Submittal Process	DALT test equip with certification	RA	RA	A

KEY = A - Approve, R - Review, W - Witness, RA - Receipt Acknowledge, S - Surveilance Review, V- Verification and Testing, C - Copy, QA - Quality Assurance

MECHANICAL ENGINEERING ROLES and RESPONSIBILITIES

System	Sub-Systems	Phase	Elements	ME QC / DOR (Ktr)	FEAD (SIOH)	FEC (PCAS)
		Submittal Proces	DALT test plan	RA	RA	A
		Submittal Proces	DALT tests report including plan drawing of duct to be tested and square foot calc for each section	RA	RA	A
	DALTS - Testing	Submittal Process	Ductwork to be DALT'd	RA	RA	A
		Field Visit	Testing	V	W	W
		Submittal Proces	Pre-final DALT report	RA	C	A
		Submittal Proces	Certified final DALT report	RA	C	A
	DALTS - Acceptance Testing	Field Visit	Quality assurance - Contracting officer DALT field checks	V	W	W
		Field Visit	Additional field checks	V	W	W
	TABS - Submittals	Submittal Process	TAB contractors qualifications & certification	RA	RA	A
		Submittal Process	Pre-TAB engineering report	RA	RA	A
		Submittal Process	*Discussion on TAB procedure	RA	RA	A
		Submittal Process	*Pre-requisite checklist	RA	RA	A
		Submittal Process	*Design review report	RA	RA	A
		Submittal Process	*Preliminary TAB test report	RA	RA	A
		Submittal Process	Certified TAB test report (Season 1)	RA	RA	A
		Submittal Process	Certified TAB test report (Season 2 (coil data))	RA	RA	A
	TABS - Pre-Test Checklist		**1) Variable Air Volume Series Boxes**			
			a) General			
		Field Visit	Louvers installed	V	W	—
		Field Visit	Manual dampers open and locked	V	W	—
		Field Visit	Automatic dampers set properly	V	W	—
		Field Visit	Housing construction leakage	V	W	—
		Field Visit	Access doors per plans & specs.	V	W	—
		Field Visit	Condensate drain piping & pan	V	W	—
		Field Visit	Free from dirt & debris	V	W	—
		Field Visit	Nameplate data clearly visible	V	W	—
			b) Filters			
		Field Visit	Type / size / number correct	V	W	—
		Field Visit	Clean	V	W	—
		Field Visit	Blank-off plates installed	V	W	—
		Field Visit	Frame leakage at a minimum	V	W	—
			c) Coils (Hydronic – Water / Steam)			
		Field Visit	Size & rows	V	W	—
		Field Visit	Fin spacing & condition	V	W	—
		Field Visit	Obstructions and/or debris	V	W	—
		Field Visit	Correct air flow direction	V	W	—
		Field Visit	Correct piping connections / flow	V	W	—

MECHANICAL ENGINEERING ROLES and RESPONSIBILITIES

System	Sub-Systems	Phase	Elements	ME QC / DOR (Ktr)	FEAD (SIOH)	FEC (PCAS)
		Field Visit	Valves open & set	V	W	—
		Field Visit	Vents / traps installed correctly	V	W	—
		Field Visit	Provisions for TAB measurements	V	W	—
			d) Coils (Electric)			
		Field Visit	Size & construction	V	W	—
		Field Visit	Airflow direction	V	W	—
		Field Visit	Duct connections	V	W	—
		Field Visit	Safety switches	V	W	—
		Field Visit	Obstructions	V	W	—
		Field Visit	Free from debris	V	W	—
		Field Visit	Contractors & disconnect switches	V	W	—
		Field Visit	Electrical service & connections	V	W	—
		Field Visit	Nameplate data clearly visible	V	W	—
			e) Fans			
		Field Visit	Rotation	V	W	—
		Field Visit	Wheel clearance & balance	V	W	—
		Field Visit	Bearing & motor lubrication	V	W	—
		Field Visit	Drive alignment	V	W	—
		Field Visit	Belt tension	V	W	—
		Field Visit	Drive set screws tight	V	W	—
		Field Visit	Belt guards in place	V	W	—
		Field Visit	Flex duct connector alignment	V	W	—
		Field Visit	Proper unit / duct alignment	V	W	—
		Field Visit	Starters & disconnect switches	V	W	—
		Field Visit	Electrical service & connections	V	W	—
		Field Visit	Nameplate data clearly visible	V	W	—
			f) Vibration isolation			
		Field Visit	Springs & compression	V	W	—
		Field Visit	Base level & free	V	W	—
			2) DUCT SYSTEMS			
			a) General			
		Field Visit	Manual damper positioned & locked	V	W	—
		Field Visit	Damper adjustments accessible	V	W	—
		Field Visit	Access doors closed & tight	V	W	—
		Field Visit	Fire dampers open & accessible	V	W	—
		Field Visit	Terminal units open & set	V	W	—
		Field Visit	Registers/diffusers wide open & set	V	W	—
		Field Visit	Turning vanes in square elbows	V	W	—
		Field Visit	Provisions made for TAB tests	V	W	—
		Field Visit	System installed per plans & specs.	V	W	—
		Field Visit	All ductwork sealed as required	V	W	—
			b) Architectural			
		Field Visit	Windows installed & closed	V	W	—
		Field Visit	Doors closed as required	V	W	—
		Field Visit	Ceiling plenums installed/sealed	V	W	—
		Field Visit	Access doors closed & tight	V	W	—
		Field Visit	Air shafts/openings as required	V	W	—
			3) PUMPS			
			a) Motors			
		Field Visit	Rotation	V	W	—

MECHANICAL ENGINEERING ROLES and RESPONSIBILITIES

System	Sub-Systems	Phase	Elements	ME QC / DOR (Ktr)	FEAD (SIOH)	FEC (PCAS)
System Acceptance (continued)		Field Visit	Lubrication	V	W	—
		Field Visit	Alignment	V	W	—
		Field Visit	Set screws tight	V	W	—
		Field Visit	Guards in place	V	W	—
		Field Visit	Tank level and controls	V	W	—
		Field Visit	Starters & disconnects	V	W	—
		Field Visit	Electrical service & connections	V	W	—
			b) Piping			
		Field Visit	Correct flow	V	W	—
		Field Visit	Correct connections	V	W	—
		Field Visit	Leakage	V	W	—
		Field Visit	Valves positioned & set	V	W	—
		Field Visit	Strainers clean	V	W	—
		Field Visit	Air Vented	V	W	—
		Field Visit	Flexible connectors installed	V	W	—
		Field Visit	Provisions made for TAB tests	V	W	—
		Field Visit	System water clean	V	W	—
			c) Bases			
		Field Visit	Vibration isolation	V	W	—
		Field Visit	Grouting (if required)	V	W	—
		Field Visit	Leveling	V	W	—
			4) HYDRONIC EQUIPMENT			
			a) Boilers			
		Field Visit	Operating controls & devices	V	W	—
		Field Visit	Safety controls & devices	V	W	—
		Field Visit	Lubrication of fans & pumps	V	W	—
		Field Visit	Draft controls & devices	V	W	—
		Field Visit	Piping controls & devices	V	W	—
		Field Visit	Valves set & open	V	W	—
		Field Visit	Water make-up provisions	V	W	—
		Field Visit	Blowdown provisions	V	W	—
		Field Visit	Electrical connections	V	W	—
		Field Visit	Nameplate data clearly visible	V	W	—
			b) Heat Exchangers			
		Field Visit	Correct flow & connections	V	W	—
		Field Visit	Valves open or set	V	W	—
		Field Visit	Air vents or steam traps	V	W	—
		Field Visit	Leakage	V	W	—
		Field Visit	Provisions made for TAB tests	V	W	—
		Field Visit	Nameplate data clearly visible	V	W	—
			c) Cooling Towers/Evaporative Condensers			
		Field Visit	Correct flow & connections	V	W	—
		Field Visit	Valves open or set	V	W	—
		Field Visit	Leakage	V	W	—
		Field Visit	Provisions made for TAB tests	V	W	—
		Field Visit	Sump water level	V	W	—
		Field Visit	Spray nozzles	V	W	—
		Field Visit	Fan/Pump rotation	V	W	—
		Field Visit	Motor/Fan lubrication	V	W	—
		Field Visit	Drives & alignment	V	W	—

KEY = A - Approve, R - Review, W - Witness, RA - Receipt Acknowledge, S - Surveilance Review, V- Verification and Testing, C - Copy, QA - Quality Assurance

MECHANICAL ENGINEERING ROLES and RESPONSIBILITIES

System	Sub-Systems	Phase	Elements	ME QC / DOR (Ktr)	FEAD (SIOH)	FEC (PCAS)
System Acceptance (continued)		Field Visit	Guards in place	V	W	—
		Field Visit	Starters & disconnects	V	W	—
		Field Visit	Electrical connections	V	W	—
		Field Visit	Nameplate data clearly visible	V	W	—
			5) REFRIGERANT EQUIPMENT			
		Field Visit	Crankcase heaters energized	V	W	—
		Field Visit	Operating controls & devices	V	W	—
		Field Visit	Safety controls & devices	V	W	—
		Field Visit	Valves open	V	W	—
		Field Visit	Piping connections & flow	V	W	—
		Field Visit	Flexible connectors	V	W	—
		Field Visit	Oil level & lubrication	V	W	—
		Field Visit	Alignment & drives	V	W	—
		Field Visit	Guards in place	V	W	—
		Field Visit	Vibration isolation	V	W	—
		Field Visit	Starters/Contactors/Disconnects	V	W	—
		Field Visit	Electrical connections	V	W	—
		Field Visit	Nameplate data clearly visible	V	W	—
			6) HYDRONIC PIPING SYSTEM			
		Field Visit	Leak tested	V	W	—
		Field Visit	Fluid levels & make-up	V	W	—
		Field Visit	Relief or safety valves	V	W	—
		Field Visit	Expansion tanks & air vents	V	W	—
		Field Visit	Steam traps & connections	V	W	—
		Field Visit	Strainers clean	V	W	—
		Field Visit	Valves open & set	V	W	—
		Field Visit	Provisions made for TAB tests	V	W	—
		Field Visit	Systems installed per plans & specs.	V	W	—
			7) CONTROLS & CONTROL SYSTEMS			
		Field Visit	Data centers	V	W	—
		Field Visit	Outdoor/return Air/reset	V	W	—
		Field Visit	Economizer set & tested	V	W	—
		Field Visit	AHU Static pressure set	V	W	—
		Field Visit	Room controls calibrated	V	W	—
		Field Visit	VAV box regulators set to design	V	W	—
		Field Visit	VAV box P.E. switches set	V	W	—
		Field Visit	Proper end-of-line static pressure	V	W	—
		Field Visit	VAV box reheats tested	V	W	—
			8) OTHER CHECKS			
		Submittal Process	Appropriate contractors notified of TABS	A	RA	S
		Submittal Process	Preliminary data complete	A	RA	S
		Submittal Process	Test report forms prepared	S	RA	A

KEY = A - Approve, R - Review, W - Witness, RA - Receipt Acknowledge, S - Surveilance Review, V- Verification and Testing, C - Copy, QA - Quality Assurance

MECHANICAL ENGINEERING ROLES and RESPONSIBILITIES

System	Sub-Systems	Phase	Elements	ME QC / DOR (Ktr)	FEAD (SIOH)	FEC (PCAS)
	TABS - Testing	Field Visit	TAB field work	V	W	
		Submittal Process	Preliminary procedures	RA	C	A
		Field Visit	TAB air distrbution systems	V	W	—
		Field Visit	TAB water distribution systems	V	W	—
		Field Visit	Sound measurement work	V	W	—
		Field Visit	TAB work on performance tests without seasonal limitations	V	W	—
		Field Visit	TAB work on performance tests with seasonal limitations	V	W	—
		Field Visit	Marking settings	V	W	—
		Field Visit	Marking of test ports	V	W	—
	TABS - Acceptance Testing	Field Visit	Quality assurance - Contracting officer TAB field checks	V	W	W
		Field Visit	Additional field checks	V	W	W
	ACATS - Submittals	Submittal Process	Controls contractor qualifications	RA	RA	A
		Submittal Process	Manufacturers field report	RA	RA	A
		Submittal Process	Performance verification test plan (PVT)	RA	RA	A
		Submittal Process	Pre-PVT checklist	RA	RA	A
		Submittal Process	Final certified PVT report (with all mods incorporated in as-builts)	RA	RA	A
	ACATS - Pre-PVT Checklist	Field Visit	Prior to conducting the PVT, thoroughly inspect the installed work with the Contractor's QC representative and the mechanical contractor using the following checklist. Submit the checklist with items checked off once verified. Provide a detailed explana	V	W	—
		Field Visit	a. Verify all required mechanical installation work is successfully completed, and all HVAC equipment is working correctly (or will be by the time the PVT is conducted).	V	W	—
		Field Visit	b. Verify HVAC motors operate below full-load amperage ratings.	V	W	—
		Field Visit	c. Verify all required control system components, wiring, and accessories are installed.	V	W	—
		Field Visit	d. Verify the installed control system architecture matches approved drawings.	V	W	—
		Field Visit	e. Verify all control circuits operate at the proper voltage and are free from grounds or faults.	V	W	—
		Field Visit	f. Verify all required surge protection is installed and functions correctly.	V	W	—
		Field Visit	g. Verify the A/C Power Table specified in "CONTROLS SYSTEM OPERATORS MANUALS" is accurate.	V	W	—

MECHANICAL ENGINEERING ROLES and RESPONSIBILITIES

System	Sub-Systems	Phase	Elements	ME QC / DOR (Ktr)	FEAD (SIOH)	FEC (PCAS)
System Acceptance (continued)		Field Visit	h. Verify all DDC network communications function properly, including uploading and downloading programming changes.	V	W	—
		Field Visit	i. Using the BACnet protocol analyzer (if provided or required in this specification), verify communications are error free.	V	W	—
		Field Visit	j. Verify each digital controller's programming is backed up.	V	W	—
		Field Visit	k. Verify all wiring, components, and panels are properly labeled.	V	W	—
		Field Visit	l. Verify all required points are programmed into devices.	V	W	—
		Field Visit	m. Verify all TAB work affecting controls is complete.	V	W	—
		Field Visit	n. Verify all valve and actuator zero and span adjustments are set properly.	V	W	—
		Field Visit	o. Verify all sensor readings are accurate and calibrated.	V	W	—
		Field Visit	p. Verify each control valve and actuator goes to normal position upon loss of power.	V	W	—
		Field Visit	q. Verify all control loops are tuned for smooth and stable operation. View trend data where applicable.	V	W	—
		Field Visit	r. Verify each controller works properly in stand-alone mode.	V	W	—
		Field Visit	s. Verify all safety controls and devices function properly, including interfaces with building fire alarm systems.	V	W	—
		Field Visit	t. Verify all electrical interlocks work properly.	V	W	—
		Field Visit	u. Verify all workstations, notebooks and maintenance personnel interface tools are delivered, all system and database software is installed, and graphic pages are created for each workstation and notebook. Notify the Government when phone lines or netw	V	W	—
		Field Visit	v. Verify the as-built (shop) control drawings are completed.	V	W	—
	ACATS - Testing	Field Visit	Field testing of components	V	W	—
		Field Visit	Field testing of programming	V	W	—
		Field Visit	Pre-performance verification testing	V	W	—
	ACATS - Acceptance Testing	Field Visit	Performance verification testing	V	W	W
		Field Visit	Performance verification re-resting	V	W	W

ROOFING ROLES and RESPONSIBILITIES

System	Sub-Systems	Phase	Elements	Roof QC / DOR (Ktr)	FEAD (SIOH)	FEC (PCAS)
Roofing	**Low Sloped Roofs**	Design Guidance	Post Award Kick Off Meeting		S	A
		Design Guidance	Verify Roof Design Assurance	A	R	S
		Submittal Process	Review Shop Drawings	A	S	S
		Submittal Process	Review Manufacturer's Product Data Sheets	A	S	S
		Submittal Process	Review Design Data (to include wind and fire resistance)	A	S	S
		Submittal Process	Review Test Reports	A	S	S
		Submittal Process	Review Certificates	A	S	S
		Submittal Process	Review Sample Roof Warranty	A	S	C
		Field Visit	Conduct Pre Roofing Conference	V	S	S
		Field Visit	Review Delivery, Storage, and Handling	A	S	S
		Field Visit	Verify Conditions for roof application	A	S	S
		Field Visit	Verify Preparation	A	S	S
		Field Visit	Verify Application	A	S	S
		Field Visit	Verify Protection of Applied Roofing	A	S	S
		Field Visit	Verify Field Quality Control	A	S	S
		Field Visit	Verify Operation Maintenance and Support Information (Roof Warranty and Information Card)	A	S	S
	Steep Sloped Roofs	Design Guidance	Post Award Kick Off Meeting		S	A
		Design Guidance	Verify Roof Design Assurance	A	R	S
		Submittal Process	Review Shop Drawings	A	S	S
		Submittal Process	Review Manufacturer's Product Data Sheets	A	S	S
		Submittal Process	Review Design Data (to include wind and fire resistance)	A	S	S
		Submittal Process	Review Test Reports	A	S	S
		Submittal Process	Review Certificates	A	S	S
		Submittal Process	Review Sample Roof Warranty	A	S	C
		Field Visit	Conduct Pre Roofing Conference	V	S	S
		Field Visit	Review Delivery, Storage, and Handling	A	S	S
		Field Visit	Verify Conditions for roof application	A	S	S
		Field Visit	Verify Preparation	A	S	S
		Field Visit	Verify Application	A	S	S
		Field Visit	Verify Protection of Applied Roofing	A	S	S
		Field Visit	Verify Field Quality Control	A	S	S
		Field Visit	Verify Operation Maintenance and Support Information (Roof Warranty and Information Card)	A	S	S

KEY = A - Approve, R - Review, W - Witness, RA - Receipt Acknowledge, S - Surveilance Review, V- Verification and Testing, C - Copy, QA - Quality Assurance

UNDERWATER STRUCTURES ROLES and RESPONSIBILITIES

System	Sub-Systems	Phase	Elements	UW QC / DOR (Ktr)	FEAD (SIOH)	FEC/NFESC (PCAS)
Waterfront Structure H10 (Uniformat II) - Substructure H1010	**Pile Foundations (H101001) Sheet Piles (H101001) Caissons (H101001) Cofferdams (H101001) Wraps and Encasements (H101001) Sheet Pile Bulheads (H101003) Gravity Walls (H101003) Block Walls (H101003) Seawalls (H101006) Boat Ramps (H101007) Cut-Off Walls (H101008) Wave Attenuation Walls (H101009) Fender Piles (H104001) Dolphins (H104004)**	Submittal Process	Shop Drawings	A	C	S
		Submittal Process	Manufacturer's Data Sheets	A	C	S
		Submittal Process	Pile driving records	A	C	S
		Submittal Process	Concrete testing: petrographic, chemical, service-life modeling	A	C	S
		Submittal Process	As-built drawings, 3D AUTOCAD format	A	C	S
		Field Visit	Validate in-water/underwater structure complies with RFP requirements, e.g., number, location, size, etc.	A	—	W
		Field Visit	Inspect in-water prestressed/precast concrete piles or sheetpiles for alignment, spalls, cracks, damages, defects, lifting hoops cut/area patched, exposed steel ties, penetrations, etc.	A	—	W
		Field Visit	Inspect in-water cast-in-place concrete drilled caissons for alignment, spalls, cracks, damages, defects, concrete quality (hardness), honeycombing, etc.	A	—	W
		Field Visit	Inspect in-water steel piles and/or p/c p/s concrete sheetpiles for alignment, damage/buckling, coating damage, penetrations, gaps, etc.	A	—	W
		Field Visit	Inspect underwater concrete placement for defects such as honeycombing, concrete quality (hardness)	A	—	W
		Field Visit	Inspect underwater slope protection for conformance with RFP requirements such as rock/boulder size, placement gap limits, angle, location (e.g., toe of slope protection), consistency, etc.	A	—	W
		Field Visit	Inspect underwater Cathodic Protection anodes and connections	A	—	W
		Field Visit	Inspect for underwater debris, existing or by construction.	A	—	W
		Field Visit	Validate in-water/underwater structure complies with RFP requirements, e.g., number, location, size, etc.	A	—	W
		Field Visit	Validate in-water/underwater structure complies with RFP requirements, e.g., number, location, size, etc.	A	—	W
		Field Visit	Validate in-water/underwater structure complies with RFP requirements, e.g., number, location, size, etc.	A	—	W

UNDERWATER STRUCTURES ROLES and RESPONSIBILITIES

System	Sub-Systems	Phase	Elements	UW QC / DOR (Ktr)	FEAD (SIOH)	FEC/NFESC (PCAS)
Underwater Cables	**All**	Submittal Process	Shop Drawings	A	C	S
		Submittal Process	Manufacturer's Data Sheets	A	C	S
		Field Visit	Validate in-water/underwater cable complies with RFP requirements, e.g., number, location, size, etc.	A	—	W
		Field Visit	Inspect underwater cable for defects/damages, kinks, missing anchors, coating damage, etc.	A	—	W
		Field Visit	Inspect for underwater debris, existing or by construction.	A	—	W
Underwater Utility Pipes and Conduits	**All**	Submittal Process	Shop Drawings	A	C	S
		Submittal Process	Manufacturer's Data Sheets	A	C	S
		Field Visit	Validate in-water/underwater component complies with RFP requirements, e.g., number, location, size, etc.	A	—	W
		Field Visit	Inspect underwater component for defects/damages, cracks, missing anchors, coating damage, etc.	A	—	W
		Field Visit	Inspect for underwater debris, existing or by construction.	A	—	W

DEFINITIONS

Approve	(A)	Professional or quality control endorsement of the submittal or installed system meets the contract requirements
Review	(R)	To confirm accuracy of the submittal and that it meets contract requirements
Witness	(W)	Observe demonstration of system performance for acceptance
Receipt **A**cknowledge	(RA)	Confirm receipt of submittal with no review necessary
Surveillance Review	(S)	A quality assurance review based on risk, complexity, and workload
Performance **V**erification and Acceptance Testing	(V)	A demonstration of satisfactory construction and system performance
Receive **C**opy of Correspondence	(C)	Receive a copy of the transmittal sheet and/or correspondence letter
Quality **A**ssurance Inspection	(QA)	Witnessing satisfactory performance without testing all devices or visual inspection of various parts of the system

SECTION 01 50 00.05 20

TEMPORARY FACILITIES AND CONTROLS FOR DESIGN-BUILD
06/10

PART 1 GENERAL

1.1 REFERENCES

The publications listed below form a part of this specification to the extent referenced. The publications are referred to within the text by the basic designation only.

AMERICAN WATER WORKS ASSOCIATION (AWWA)

AWWA C511	(2007) Standard for Reduced-Pressure Principle Backflow Prevention Assembly

FOUNDATION FOR CROSS-CONNECTION CONTROL AND HYDRAULIC RESEARCH (FCCCHR)

FCCCHR List	(continuously updated) List of Approved Backflow Prevention Assemblies
FCCCHR Manual	(1988e9) Manual of Cross-Connection Control

NATIONAL FIRE PROTECTION ASSOCIATION (NFPA)

NFPA 241	(2009) Standard for Safeguarding Construction,Alteration, and Demolition Operations
NFPA 70	(2008; AMD 1 2008) National Electrical Code - 2008 Edition

U.S. FEDERAL HIGHWAY ADMINISTRATION (FHWA)

FHWA SA-89-006	(1988) Manual on Uniform Traffic Control Devices for Streets and Highways

U.S. NATIONAL ARCHIVES AND RECORDS ADMINISTRATION (NARA)

40 CFR 247	Comprehensive Procurement Guideline for Products Containing Recovered Materials

1.2 SUBMITTALS

The use of a "G" following a submittal indicates that a Government approval action is required. Submit the following in accordance with Section 01 33 10.05 20 DESIGN SUBMITTAL PROCEDURES and Section 01 33 00.05 20 CONSTRUCTION SUBMITTAL PROCEDURES.

SD-01 Preconstruction Submittals

Traffic control plan; G

SD-06 Test Reports

Backflow Preventer Tests; G

SD-07 Certificates

Backflow Tester Certification; G

Backflow Preventers Certificate of Full Approval

1.3 EPA LISTED ITEMS USED IN CONDUCT OF THE WORK BUT NOT INCORPORATED IN THE WORK

There are many products listed in 40 CFR 247 which have been designated or proposed by EPA to include recycled or recovered materials that may be used by the Contractor in performing the work but will not be incorporated into the work. These products include office products, temporary traffic control products, and pallets. These non-construction products contain the highest practicable percentage of recycled or recovered materials and can be recycled when no longer needed.

1.4 BACKFLOW PREVENTERS CERTIFICATE

Certificate of Full Approval from FCCCHR List, University of Southern California, attesting that the design, size and make of each backflow preventer has satisfactorily passed the complete sequence of performance testing and evaluation for the respective level of approval. Certificate of Provisional Approval will not be acceptable.

1.4.1 Backflow Prevention Training Certificate

The Contractor shall submit a certificate recognized by the State or local authority that states the Contractor has completed at least 10 hours of training in backflow preventer installations. The certificate must be current.

1.5 TEMPORARY UTILITIES

1.5.1 Contractor Utilities

The Contractor shall provide his own utilities.

1.5.2 Utilities at Special Locations

Reasonable amounts of utilities will be made available to the Contractor at the prevailing Government rates. These rates may be obtained upon application to the Commanding Officer, by way of the Contracting Officer. The Contractor will be responsible for making connections, providing transformers and meters, and making disconnections; and for providing backflow preventer devices on connections to domestic water lines. Neither potable water nor sanitary facilities will be available at the main Contractor laydown area at Marine Corps Air Station (MCAS), Cherry Point, NC.

1.6 BACKFLOW TESTER CERTIFICATION

Prior to testing, submit to the Contracting Officer certification issued by the State or local regulatory agency attesting that the backflow tester has successfully completed a certification course sponsored by the regulatory agency. Tester shall not be affiliated with any company participating in

any other phase of this Contract.

1.7 WEATHER PROTECTION

Take necessary precautions to ensure that roof openings and other critical openings in the building are monitored carefully. Take immediate actions required to seal off such openings when rain or other detrimental weather is imminent, and at the end of each workday.

1.7.1 Building and Site Storm Protection

When a warning of gale force winds is issued, take precautions to minimize danger to persons, and protect the work and nearby Government property. Precautions shall include, but are not limited to, closing openings; removing loose materials, tools and equipment from exposed locations; and removing or securing scaffolding and other temporary work. Close openings in the work when storms of lesser intensity pose a threat to the work or any nearby Government property.

1.7.1.1 Hurricane Condition of Readiness

Unless directed otherwise, comply with:

a. Condition FOUR (Sustained winds of 58 mph or greater expected within 72 hours): Normal daily jobsite cleanup and good housekeeping practices. Collect and store in piles or containers all scrap lumber, waste material, and rubbish for removal and disposal at the close of each work day. Maintain the construction site including storage areas, free of accumulation of debris. Stack form lumber in neat piles less than 4 feet high. Remove all debris, trash, or objects that could become missile hazards. Review requirements pertaining to "Condition THREE" and continue action as necessary to attain "Condition FOUR" readiness. Contact Contracting Officer for Condition of Readiness (COR) updates and completion of required actions.

b. Condition THREE (Sustained winds of 58 mph or greater expected within 48 hours): Maintain "Condition FOUR" requirements and commence securing operations necessary for "Condition TWO" readiness. Cease all routine activities which might interfere with securing operations. Commence securing and stow all gear and portable equipment. Make preparations for securing buildings. Reinforce or remove formwork and scaffolding. Secure machinery, tools, equipment, materials, or remove from the jobsite. Expend every effort to clear all missile hazards and loose equipment from general base areas. Contact Contracting Officer for weather and COR updates and completion of required actions.

c. Condition TWO (Sustained winds of 58 mph or greater expected within 24 hours): Secure the jobsite, and leave Government premises.

d. Condition ONE (Sustained winds of 58 mph or greater expected within 12 hours): Contractor access to the jobsite and Government premises is prohibited.

1.8 STATION OPERATION AFFECT ON CONTRACTOR OPERATIONS

1.8.1 Interruption of Vehicular Traffic

If during the performance of work, it becomes necessary to modify vehicular traffic patterns at any locations, notify the Contracting Officer at least 15 calendar days prior to the proposed modification date, and provide a Traffic Control Plan detailing the proposed controls to traffic movement for approval. The plan shall be in accordance with State and local regulations and the FHWA SA-89-006, Part VI. Make all notifications and obtain any permits required for modification to traffic movements outside Station's jurisdiction. Provide cones, signs, barricades, lights, or other traffic control devices and personnel required to control traffic. Do not use foil-backed material for temporary pavement marking because of its potential to conduct electricity during accidents involving downed power lines.

1.9 STORAGE AREAS

The Contract Clause entitled "FAR 52.236-10, Operations and Storage Areas" and the following apply:

1.10 TEMPORARY SANITARY FACILITIES

Provide adequate sanitary conveniences of a type approved for the use of persons employed on the work, properly secluded from public observation, and maintained in such a manner as required and approved by the Contracting Officer. Maintain these conveniences at all times without nuisance. Upon completion of the work, remove the conveniences from the premises, leaving the premises clean and free from nuisance. Dispose of sewage through connection to a municipal, district, or station sanitary sewage system. Where such systems are not available, use chemical toilets or comparably effective units, and periodically empty wastes into a municipal, district, or station sanitary sewage system, or remove waste to a commercial facility. Include provisions for pest control and elimination of odors.

1.11 TEMPORARY BUILDINGS

Temporary facilities (including trailers) shall be in like new condition and shall be maintained throughout the project. Locate these facilities where directed and within the indicated operations area. Failure to maintain storage trailers or buildings to these standards shall result in the removal of non-complying units at the Contractor's expense. A sign not smaller than 24 by 24 inches shall be conspicuously placed on the trailer depicting the company name, business phone number, and emergency phone number. Trailers shall be anchored to resist high winds and must meet applicable state of local standards for anchoring mobile trailers.

1.11.1 Maintenance of Temporary Facilities

Suitably paint and maintain the temporary facilities. Failure to do so will be sufficient reason to require their removal.

1.11.2 Quality Control Manager Records and Field Office

Provide on the jobsite an office with approximately 100 square feet of useful floor area for the exclusive use of the QC Manager. Provide a

weathertight structure with adequate heating and cooling, toilet facilities, lighting, ventilation, a 4 by 8 foot plan table, a standard size office desk and chair, computer station, and working communications facilities. Provide either a 1,500 watt radiant heater and a window-mounted air conditioner rated at 9,000 Btus minimum or a window-mounted heat pump of the same minimum heating and cooling ratings. Provide a door with a cylinder lock and windows with locking hardware. Make utility connections. Locate as directed. File quality control records in the office and make available at all times to the Government. After completion of the work, remove the entire structure from the site.

PART 2 PRODUCTS

2.1 BACKFLOW PREVENTERS

Reduced pressure principle type conforming to the applicable requirements AWWA C511. Provide backflow preventers complete with bronze gate valve and strainer. The particular make, model/design, and size of backflow preventers to be installed shall be included in the latest edition of the List of Approved Backflow Prevention Assemblies issued by the FCCCHR List and shall be accompanied by a Certificate of Full Approval from FCCCHR List.

2.2 PROJECT SIGN

Prior to initiating any work on site, provide one project identification sign at the location coordinated with the Contracting Officer. Construct the sign in accordance with project sign detail attached at the end of this section. Maintain sign throughout the life of the project. Upon completion of the project, remove the sign from the site. Provide color rendering of the project. Reproduce the rendering on the signboard or enclose a copy of the rendering under a water-proof, transparent cover, and caulk for weather protection. Provide rendering in accordance with Section 01 33 10.05 20 DESIGN SUBMITTAL PROCEDURES.

2.2.1 Project Identification Signboard (Navy)

A project identification signboard shall be provided in accordance with attached Plates. The signboard shall be provided at a conspicuous location on the job site where directed by the Contracting Officer.

a. The field of the sign shall consist of a minimum of 4 by 8 foot sheet of exterior plywood.

b. The entire signboard and supports shall be painted. The lettering and sign work shall be performed by a skilled sign painter using paint known in the trade as bulletin colors. The colors, lettering sizes, and lettering styles shall be as indicated.

c. NAVFAC logo shall be a sticker/decal with either transparent or white background or paint the logo by stencil onto the sign. The weather resistant sticker/decal film shall be rated for a minimum of 2-year exterior vertical exposure. NAVFAC Logo is available at:
https://portal.navfac.navy.mil/portal/page?_pageid=181,3465071&_dad=portal&_schema=PORTAL

d. Sign paint colors

(1) Blue = To match dark blue color in the NAVFAC logo.

(2) White = To match Brilliant White color in the NAVFAC logo.

e. Final signboard artwork (rendering) may be either mounted under plexiglas as indicated in attached Plates, or at the Contractor's option may be electrostatically printed on self-adhering, weather resistant, glossy vinyl film and mounted to signboard. Provide film that is capable of full color reproduction of the building rendering and is rated for a minimum of 2 years exterior vertical exposure.

PART 3 EXECUTION

3.1 TEMPORARY PHYSICAL CONTROLS

3.1.1 Access Controls

3.1.1.1 Temporary Barricades

Contractor shall provide for barricading around all work areas to prevent public access.

3.1.1.2 Fencing

a. Provide fencing along the construction site at all open excavations and tunnels to control access by unauthorized people. Fencing must be installed to be able to restrain a force of at least 250 pounds against it.

b. In addition, prior to the start of work, enclose the construction site with a temporary safety fence. The safety fence shall be bright orange, shall be made of high density polyethylene grid or approved equal or plastic fence from recovered materials containing 60-100 percent recovered content level plastic, a minimum of 42 inches high, supported and tightly secured to steel posts located on minimum 10 foot centers. Remove the fence from the work site upon completion of the contract.

3.1.1.3 Signs

Place warning signs at the construction area perimeter designating the presence of construction hazards requiring unauthorized persons to keep out. Signs must be placed on all sides of the project, with at least one sign every 300 feet. All points of entry shall have signs designating the construction site as a hard hat area.

3.1.1.4 Traffic Work

All work around/involving roadways, to include roadway excavations and utility crossings, will be conducted in accordance with Manual of Traffic Control Devices. Contractors shall provide and ensure appropriate road closure and detour signs are established as necessary for motor traffic management. All road closures shall be coordinated with the Contracting Officer in advance. Self-illuminated (lighted) barricades shall be provided during hours of darkness. Brightly-colored (orange) vests are required for all personnel working in roadways. Road closures shall require a road closure plan showing the location of signage.

3.2 TEMPORARY WIRING

Provide temporary wiring in accordance with NFPA 241 and NFPA 70, Assured Equipment Grounding Conductor Program. Program shall include frequent inspection of all equipment and apparatus.

3.3 REDUCED PRESSURE BACKFLOW PREVENTERS

Provide an approved reduced pressure backflow prevention assembly at each location where the Contractor taps into the Government potable water supply.

A certified tester(s) shall perform testing of backflow preventer(s) for proper installation and operation and provide subsequent tagging. Backflow preventer tests shall be performed using test equipment, procedures, and certification forms conforming to those outlined in the latest edition of the Manual of Cross-Connection Control published by the FCCCHR Manual. Test and tag each reduced pressure backflow preventer upon initial installation (prior to continued water use) and quarterly thereafter. Tag shall contain the following information: make, model, serial number, dates of tests, results, maintenance performed, and signature of tester. Record test results on certification forms conforming to requirements cited earlier in this paragraph.

-- End of Section --

THIS PAGE HAS BEEN INTENTIONALLY LEFT BLANK

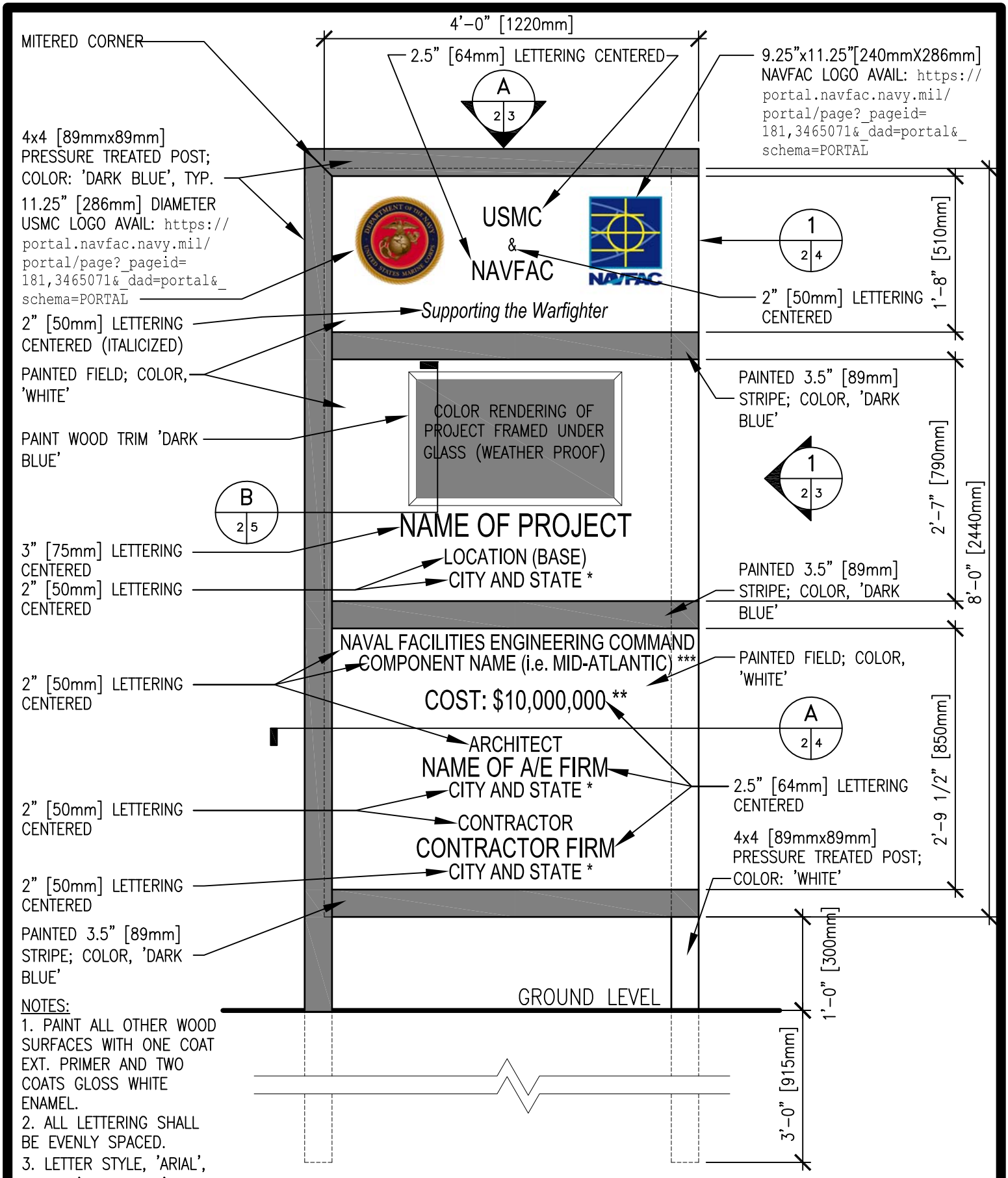

NOTES:
1. PAINT ALL OTHER WOOD SURFACES WITH ONE COAT EXT. PRIMER AND TWO COATS GLOSS WHITE ENAMEL.
2. ALL LETTERING SHALL BE EVENLY SPACED.
3. LETTER STYLE, 'ARIAL', COLOR 'DARK BLUE'. TYPICAL FOR ALL LETTERING.

*–ABBREVIATE STATE
**–CONFIRM USE WITH CONTRACTING OFFICER
***–VERIFY NAME WITH CONTRACTING OFFICER

PROJECT IDENTIFICATION SIGNBOARD FOR MARINE CORPS PROJECTS

SCALE: 3/4" = 1'-0"

PLATE 2MC

REV DATE: 2008 03 18 rem

NOTE: POSTS AND BRACES SHALL BE PRESSURE TREATED. ALL FASTENINGS SHALL BE ZINC COATED.

INCLUDE OPTIONAL BRACING IN UNSTABLE SOIL OR HIGH WIND ENVIRONMENTS.

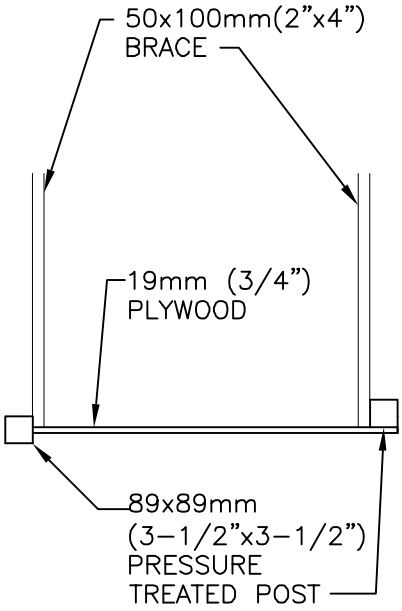

TOP VIEW

SCALE: 3"=1'–0"

A
1, 2 | 3

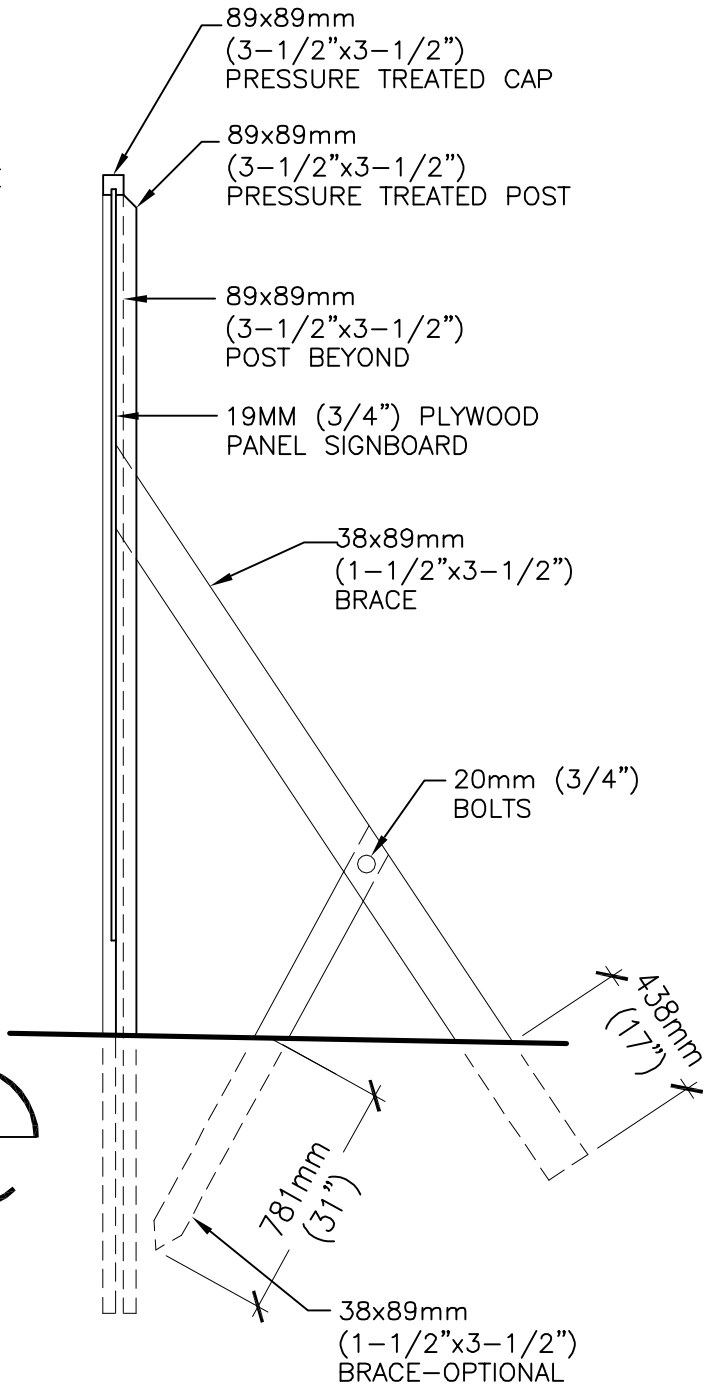

SIDE VIEW

1
1, 2 | 3

PROJECT IDENTIFICATION SIGNBOARD SUPPORT DETAILS

SCALE: NONE

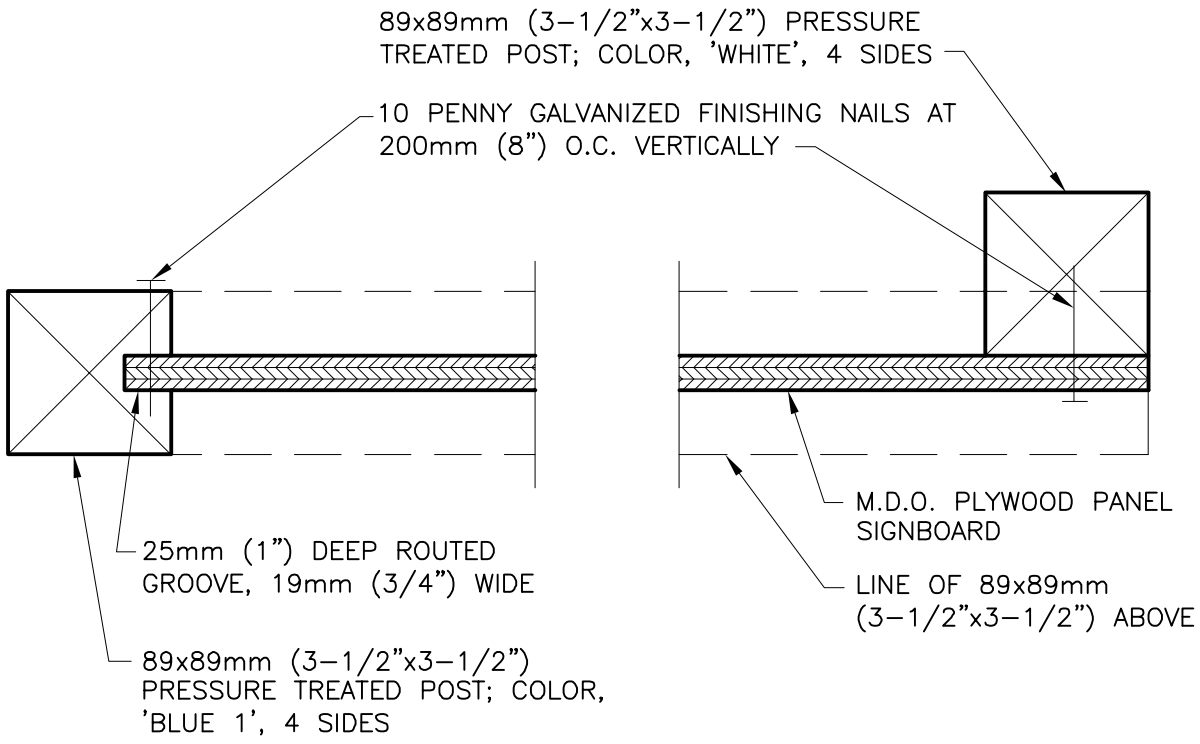

PLAN SECTION

SCALE: NONE

A
1, 2 | 4

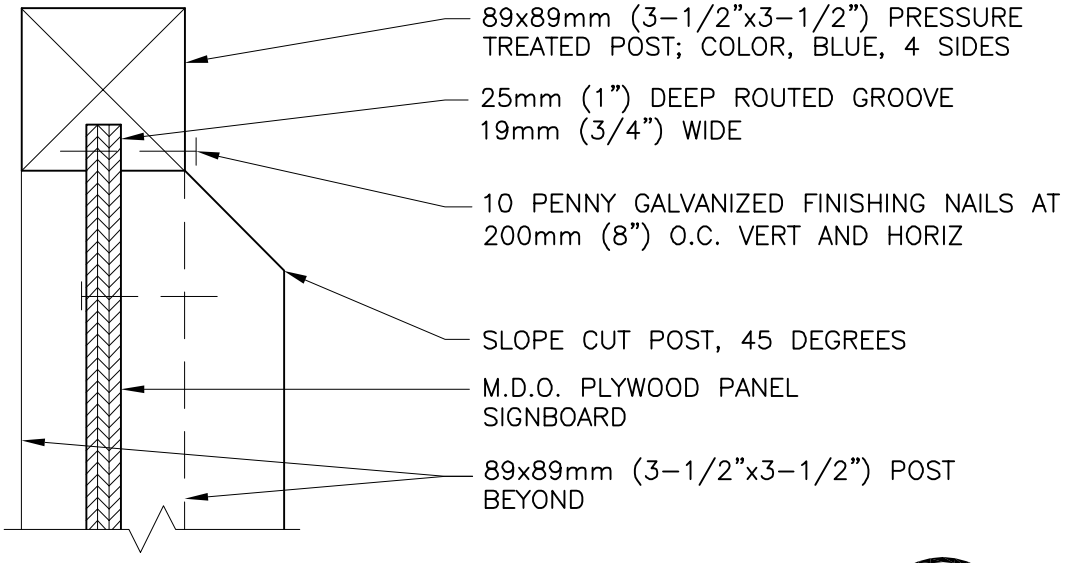

DETAIL @ END

SCALE: NONE

1
1, 2 | 4

PROJECT IDENTIFICATION SIGNBOARD SECTIONS

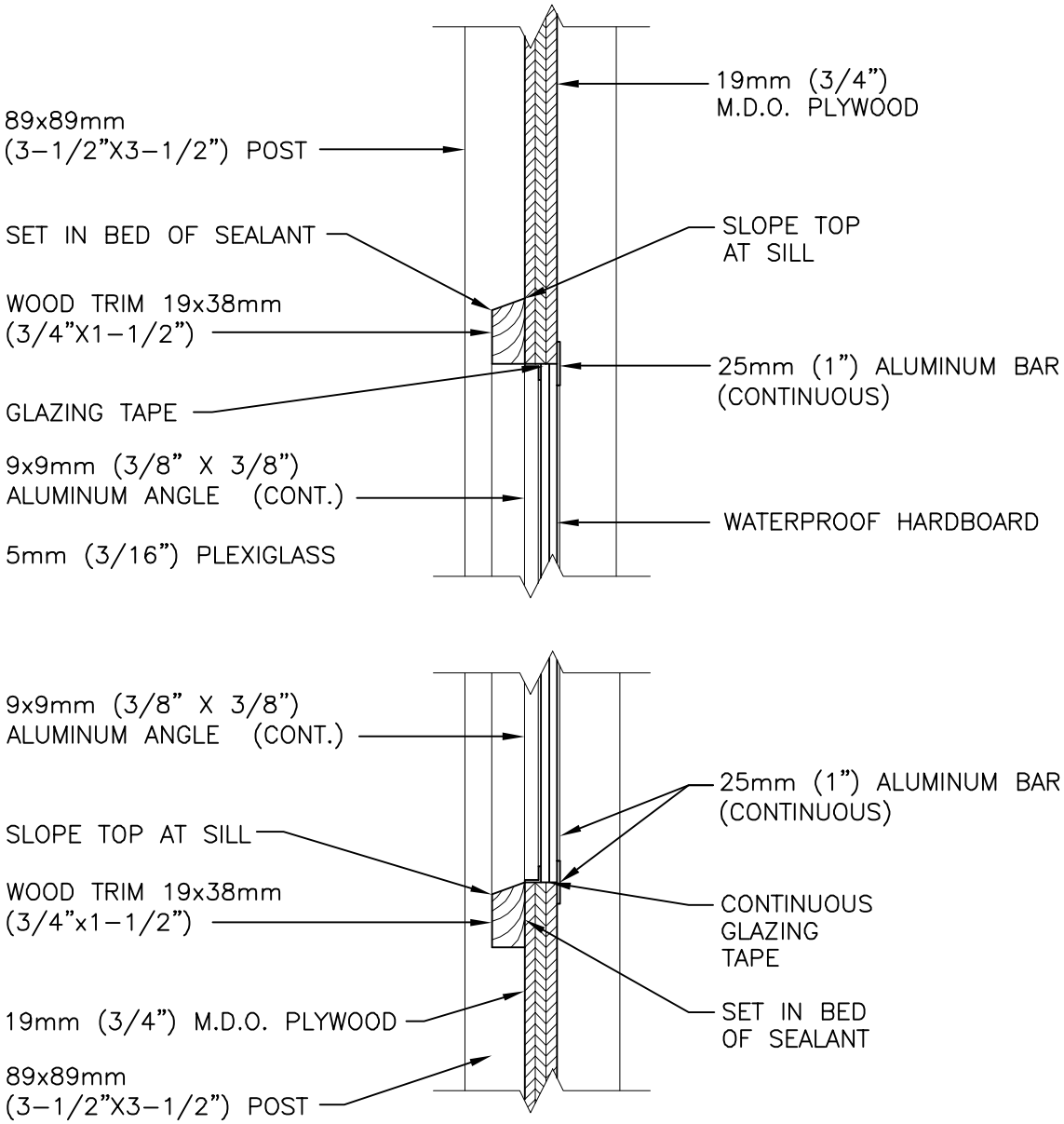

SECTION

SCALE: NONE

B
2 | 5

PROJECT IDENTIFICATION SIGNBOARD RENDERING DETAIL

PLATE 5 OF 5

SECTION 01 57 13.00 22

EROSION AND SEDIMENT CONTROL
03/09

PART 1 GENERAL

1.1 REFERENCES

The publications listed below form a part of this specification to the extent referenced. The publications are referred to in the text by the basic designation only.

ASTM INTERNATIONAL (ASTM)

ASTM D 3787	(2007) Bursting Strength of Textiles - Constant-Rate-of-Traverse (CRT), Ball Burst Test
ASTM D 4533	(2004; R 2009) Trapezoid Tearing Strength of Geotextiles
ASTM D 4632	(2008) Grab Breaking Load and Elongation of Geotextiles

NORTH CAROLINA SEDIMENT CONTROL COMMISSION (NCSCC)

NCSCC ESCM	(2006; R 2009) Erosion and Sediment Control Planning and Design Manual

1.2 DESCRIPTION OF WORK

The work includes the provision of temporary and permanent erosion control measures to prevent the pollution of air, water, and land within the project limits and in areas outside the project limits where work is accomplished in conjunction with the project.

1.3 SUBMITTALS

Submit the following in accordance with Section 01 33 00 SUBMITTAL PROCEDURES:

SD-01 Preconstruction Submittals

Construction Sequence Schedule; G

SD-03 Product Data

Sediment Fence

Dust Suppressors

Erosion Control Matting

Filter Fabric

1.4 CONSTRUCTION SEQUENCE SCHEDULE

Submit a Contractor furnished construction work sequence schedule, a minimum of 30 days prior to start of construction. The work schedule shall coordinate the timing of land disturbing activities with the provision of erosion control measures to reduce on site erosion and off site sedimentation. Installation of temporary erosion control features shall be coordinated with the construction of permanent erosion control features to assure effective and continuous control of erosion and pollution.

1.5 STATE APPROVED PLAN

The erosion control plan indicated has been approved by the State. No additional State review and approval of the erosion control plan is required, unless the Contractor desires to modify the erosion control plan indicated. Should the Contractor desire to modify the State approved plan, a resubmittal to the State, including the State's approval is required prior to the start of construction. The contractor shall be responsible for any additional costs and time incurred as a result of the resubmittal of the previously approved erosion control plan. The contractor shall anticipate a minimum 45 day review period by the State. Provide and maintain erosion control measures in accordance with NCSCC ESCM, and as specified herein.

PART 2 PRODUCTS

2.1 SEDIMENT FENCE

2.1.1 State Standard Sediment Fence

NCSCC ESCM Standard 6.62, sediment fence (maximum height of 18 inches).

2.2 SILT FENCE DROP INLET PROTECTION

2.2.1 State Standard Drop Inlet Protection

NCSCC ESCM Standard 6.51, using silt fencing.

2.3 CONSTRUCTION ENTRANCE

2.3.1 State Standard Construction Entrance

2.3.1.1 Aggregate

NCSCC ESCM, Standard 6.06.

2.3.1.2 Filter Fabric

A woven or nonwoven polypropylene, nylon, or polyester containing stabilizers and/or inhibitors to make the fabric resistant to deterioration from ultraviolet, and with the following properties:

a. Minimum grab tensile strength (TF 25 #1/ASTM D 4632) 180 pounds

b. Minimum Puncture (TF 25 #4/ASTM D 3787) 75 psi in the weakest direction

c. Apparent Opening Size 40-80 (U.S. Sieve Size)

d. Minimum Trapezoidal tear strength (TF 25 #2/ASTM D 4533) 50 pounds

2.4 DUST SUPPRESSORS

Calcium chloride, or other standard manufacturer's spray on adhesives designed for dust suppression.

2.5 TEMPORARY SEEDING

2.5.1 State Standard Temporary Seeding

Provide seed, lime, and fertilizer in accordance with NCSCC ESCM, Standard 6.10. Provide hay or straw mulch.

2.6 EROSION CONTROL MATTING

Jute, excelsior, or paper matting that has not been bleached or dyed. Provide matting in minimum 4 feet widths. Staples for anchoring the matting shall be minimum 11 gage wire, formed into a "U" shape with a minimum throat width of one inch and minimum length of 6 inches after forming.

2.6.1 Jute Matting

A uniform open plain weave of single jute yarn providing an average weight of 0.9 pounds per square yard of matting. Yarn shall be of a loosely twisted construction and shall not vary in thickness by more than one-half its normal diameter. Matting shall have openings between strands length wise of 0.45 to 0.75 inch, and between strands crosswise of 0.67 to 1.13 inch.

2.6.2 Excelsior Matting

A machine produced mat of wood excelsior with a minimum of 80 percent of wood fibers 6 inches in length or longer. The matting shall have an average weight of 0.75 to 0.85 pounds per square yard with an even fiber distribution producing a consistent mat thickness, and shall have on one side a woven fabric. The woven fabric shall be twisted paper cord, cotton cord, or an extruded plastic mesh with a minimum mesh size of one by one inch and a maximum mesh size of 1 1/2 by 3 inch.

2.6.3 Paper Matting

Shall be a knitted polypropylene yarn with uniform openings with biodegradable paper strips continuously interwoven. The matting shall weigh a minimum of 0.09 pounds per square yard with maximum openings of 3/4 inch and minimum openings of 1/2 inch.

2.6.4 Straw Matting

A machine produced straw mat with a minimum thickness of 1/2 inch +/- 1/8 inch. The straw shall be evenly distributed throughout the mat to provide a minimum average dry weight of .70 pounds per square yard. The topside of the mat shall be covered with a 3/8 inch biodegradable plastic mesh, with the mesh attached to the straw by a knitting process using biodegradable thread.

PART 3 EXECUTION

3.1 CONSTRUCTION SEQUENCE SCHEDULE

Stabilize areas for construction access immediately with gravel. Install principal sediment basins and traps before any major site grading takes place. Provide additional sediment traps, and sediment fences as grading progresses. Provide drop inlet protection around existing drainage structures, and inlet and outlet protection at the ends of new drainage systems. Stabilize graded and disturbed areas immediately after grading. Permanent stabilization shall be provided immediately on areas that have been final graded. Temporary seeding and mulching shall be provided on disturbed areas as specified in the paragraph entitled "Temporary Seeding." Installation of temporary erosion control features shall be coordinated with the construction of permanent erosion control features to assure effective and continuous control of erosion and sediment deposition. **Remove temporary erosion control measures at the end of construction and provide permanent seeding.**

3.2 SEDIMENT FENCES

Install posts at the spacing indicated, and at an angle between 2 degrees and 20 degrees towards the potential silt load area. Sediment fence height shall be approximately 18 inches. Do not attach filter fabric to existing trees. Secure filter fabric to the post and wire fabric using staples, tie wire, or hog rings. Imbed the filter fabric into the ground as indicated. Splice filter fabric at support pole using a 6 inch overlap and securely seal.

3.3 DROP INLET PROTECTION

Provide stakes evenly spaced around the perimeter of the drop inlet , a maximum of 3 feet apart. Stakes shall be driven immediately adjacent to the drainage structure, a minimum of 18 inches into the ground. The fabric shall be securely fastened to the outside of the stakes, with the bottom of the fabric placed into a trench and backfilled.

3.4 CURB INLET PROTECTION

Provide wire mesh over the curb inlet opening so at least 12 inches of wire mesh extends across the inlet cover and at least 12 inches of wire mesh extends across the gutter from the inlet opening, as indicated. Place stone on wire mesh against curb inlet.

3.5 CONSTRUCTION ENTRANCE

Provide as indicated, a minimum of 6 inches thick, at points of vehicular ingress and egress on the construction site. Construction entrances shall be cleared and grubbed, and then excavated a minimum of 3 inches prior to placement of the filter fabric and aggregate. The aggregate shall be placed in a manner that will prevent damage and movement of the fabric. Place fabric in one piece, where possible. Overlap fabric joints a minimum of 12 inches.

3.6 DUST SUPPRESSORS

Immediately dampen the surface before calcium chloride application. Apply dust suppressors on unsurfaced base, subbase and other unsurfaced travel ways. Apply calcium chloride at the rate of 1.0 to 1.25 pounds per square

yard of surface for pellets for the initial application. For subsequent applications of calcium chloride, application rates may be approximately 75 percent of initial application rates. Do not apply when raining or the moisture conditions exceed that required for proper application. Apply other dust suppressors in accordance with manufacturers instructions. Protect treated surfaces from traffic for a minimum of 2 hours after treatment. Repeat application of dust suppressors as required to control dust emissions.

3.7 TEMPORARY SEEDING

3.7.1 Time Restrictions

Within 48 hours after attaining the grading increment specified herein, provide seed, fertilizer, mulch and water on graded areas when any of the following conditions occur:

a. Grading operations stop for an anticipated duration of 30 days or more.

b. When it is impossible or impractical to bring an area to finish grade so that permanent seeding operations can be performed without serious disturbance from additional grading.

c. Grading operations for a specific area are completed and the seeding seasons specified for permanent seeding in Section 32 92 19 SEEDING is more than 30 days away.

d. When an immediate cover is required to minimize erosion, or when erosion has occurred.

e. Provide on erosion control devices constructed using soil materials.

3.7.2 Seeding Requirements

3.7.2.1 State Standard Seeding Requirements

Provide seed, lime, and fertilizer in accordance with NCSCC ESCM, Standard 6.10. Provide hay or straw mulch in an air dried condition, and secure mulch in place.

3.7.2.2 Permanent Seeding

Temporary seeding shall be removed, and permanent seeding shall be provided during the specified planting season as specified in Section 32 92 19 SEEDING.

3.8 EROSION CONTROL MATTING

Place matting in the direction of the flow of water. The up channel mat ting end shall be toed in a narrow trench a minimum of 5 inches deep. Where one roll of matting ends and a second roll begins, the end of the upper roll shall be brought over the buried end of the second roll, to provide a 6 inch overlap. Where matting widths are laid side by side, the overlap between matting shall be 4 inches. Provide check slots every 50 feet longitudinally in the matting. Construct check slots by providing a narrow trench 5 inches deep and folding the matting down in to the trench, across the bottom of the trench, and then back up the trench to the

existing ground Backfill and compact the trench using the excavated material from the trench. Staple matting ends, junctions, and check slots at 10 inches on center. Staple matting outer edges and overlaps and the center of each matting strip at 3 feet on center. Install excelsior matting with the woven fabric on top.

3.9 MAINTENANCE AND INSPECTION

Inspect erosion control devices after each rainfall and daily during pro longed rainfall. Remove sediment deposits after each rainfall or when sediment reaches approximately one-half the barrier height. Immediately repair damaged erosion control devices and damaged areas around and underneath the devices. Maintain erosion control devices to assure continued performance of their intended function. Modify the erosion control plan as required to control problem areas noticed after each inspection. Modifications shall be approved by the Contracting Officer.

3.10 CLEAN UP

At the completion of the job, or when directed or approved by the Contracting Officer, temporary erosion control devices shall be removed. Erosion control devices and areas immediately adjacent to the device shall be filled (where applicable), shaped to drain and to blend into the surrounding contours, and provided with permanent seeding. Erosion control devices may remain in place after job completion when approved by the Contracting Officer.

-- End of Section --

SECTION 01 57 19.00 20

TEMPORARY ENVIRONMENTAL CONTROLS
06/10

PART 1 GENERAL

1.1 REFERENCES

The publications listed below form a part of this specification to the extent referenced. The publications are referred to within the text by the basic designation only.

U.S. ENVIRONMENTAL PROTECTION AGENCY (EPA)

EPA 530/F-93/004	(1993; Rev O; Updates I, II, IIA, IIB, and III) Test Methods for Evaluating Solid Waste (Vol IA, IB, IC, and II) (SW-846)
EPA 833-R-060-04	(2000) Developing Your Storm Water Pollution Prevention Plan, a Guide for Construction Sites

U.S. NATIONAL ARCHIVES AND RECORDS ADMINISTRATION (NARA)

29 CFR 1910.120	Hazardous Waste Operations and Emergency Response
40 CFR 112	Oil Pollution Prevention
40 CFR 241	Guidelines for Disposal of Solid Waste
40 CFR 243	Guidelines for the Storage and Collection of Residential, Commercial, and Institutional Solid Waste
40 CFR 258	Subtitle D Landfill Requirements
40 CFR 260	Hazardous Waste Management System: General
40 CFR 261	Identification and Listing of Hazardous Waste
40 CFR 262	Standards Applicable to Generators of Hazardous Waste
40 CFR 263	Standards Applicable to Transporters of Hazardous Waste
40 CFR 264	Standards for Owners and Operators of Hazardous Waste Treatment, Storage, and Disposal Facilities
40 CFR 265	Interim Status Standards for Owners and Operators of Hazardous Waste Treatment, Storage, and Disposal Facilities
40 CFR 266	Standards for the Management of Specific

	Hazardous Wastes and Specific Types of Hazardous Waste Management Facilities
40 CFR 268	Land Disposal Restrictions
40 CFR 270	EPA Administered Permit Programs: The Hazardous Waste Permit Program
40 CFR 271	Requirements for Authorization of State Hazardous Waste Programs
40 CFR 272	Approved State Hazardous Waste Management Programs
40 CFR 273	Standards For Universal Waste Management
40 CFR 279	Standards for the Management of Used Oil
40 CFR 280	Technical Standards and Corrective Action Requirements for Owners and Operators of Underground Storage Tanks (UST)
40 CFR 300	National Oil and Hazardous Substances Pollution Contingency Plan
40 CFR 355	Emergency Planning and Notification
40 CFR 372-SUBPART D	Specific Toxic Chemical Listings
40 CFR 51	Requirements For Preparation, Adoption, And Submittal Of Implementation Plans
40 CFR 52	Approval And Promulgation Of Implementation Plans
40 CFR 60	Standards of Performance for New Stationary Sources
40 CFR 61	National Emission Standards for Hazardous Air Pollutants
40 CFR 63	National Emission Standards For Hazardous Air Pollutants For Source Categories
40 CFR 761	Polychlorinated Biphenyls (PCBs) Manufacturing, Processing, Distribution in Commerce, and Use Prohibitions
40 CFR 82	Protection of Stratospheric Ozone
49 CFR 171	General Information, Regulations, and Definitions
49 CFR 172	Hazardous Materials Table, Special Provisions, Hazardous Materials Communications, Emergency Response Information, and Training Requirements
49 CFR 173	Shippers - General Requirements for

Shipments and Packagings

49 CFR 178 Specifications for Packagings

1.2 DEFINITIONS

1.2.1 Sediment

Soil and other debris that have eroded and have been transported by runoff water or wind.

1.2.2 Solid Waste

Garbage, refuse, debris, sludge, or other discharged material, including solid, liquid, semisolid, or contained gaseous materials resulting from domestic, industrial, commercial, mining, or agricultural operations. Types of solid waste typically generated at construction sites may include:

a. Green waste: The vegetative matter from landscaping, land clearing and grubbing, including, but not limited to, grass, bushes, scrubs, small trees and saplings, tree stumps and plant roots. Marketable trees, grasses and plants that are indicated to remain, be re-located, or be re-used are not included.

b. Surplus soil: Existing soil that is in excess of what is required for this work, including aggregates intended, but not used, for on-site mixing of concrete, mortars and paving. Contaminated soil meeting the definition of hazardous material or hazardous waste is not included.

c. Debris: Non-hazardous solid material generated during the construction, demolition, or renovation of a structure which exceeds 2.5 inch particle size that is: a manufactured object; plant or animal matter; or natural geologic material (e.g. cobbles and boulders), broken or removed concrete, masonry, and rock asphalt paving; ceramics; roofing paper and shingles. Inert materials may not be reinforced with or contain ferrous wire, rods, accessories and weldments. A mixture of debris and other material such as soil or sludge is also subject to regulation as debris if the mixture is comprised primarily of debris by volume, based on visual inspection.

d. Wood: Dimension and non-dimension lumber, plywood, chipboard, hardboard. Treated and/or painted wood that meets the definition of lead contaminated or lead based contaminated paint is not included.

e. Scrap metal: Scrap and excess ferrous and non-ferrous metals such as reinforcing steel, structural shapes, pipe and wire that are recovered or collected and disposed of as scrap. Scrap metal meeting the definition of hazardous material or hazardous waste is not included.

f. Paint cans: Metal cans that are empty of paints, solvents, thinners and adhesives. If permitted by the paint can label, a thin dry film may remain in the can.

g. Recyclables: Materials, equipment and assemblies such as doors, windows, door and window frames, plumbing fixtures, glazing and mirrors that are recovered and sold as recyclable. Metal meeting the definition of lead contaminated or lead based paint contaminated may not be included as recyclable if sold to a scrap metal company. Paint cans may not be included as recyclable if sold to a scrap metal company.

h. Hazardous Waste: By definition, to be a hazardous waste a material must first meet the definition of a solid waste. Hazardous waste and hazardous debris are special cases of solid waste. They have additional regulatory controls and must be handled separately. They are thus defined separately in this document.

Material not regulated as solid waste are: nuclear source or byproduct materials regulated under the Federal Atomic Energy Act of 1954 as amended; suspended or dissolved materials in domestic sewage effluent or irrigation return flows, or other regulated point source discharges; regulated air emissions; and fluids or wastes associated with natural gas or crude oil exploration or production.

1.2.3 Hazardous Debris

As defined in Solid Waste paragraph, debris that contains listed hazardous waste (either on the debris surface, or in its interstices, such as pore structure) per 40 CFR 261; or debris that exhibits a characteristic of hazardous waste per 40 CFR 261.

1.2.4 Chemical Wastes

This includes salts, acids, alkalizes, herbicides, pesticides, and organic chemicals.

1.2.5 Garbage

Refuse and scraps resulting from preparation, cooking, dispensing, and consumption of food.

1.2.6 Hazardous Waste

Any discarded material, liquid, solid, or gas, which meets the definition of hazardous material or is designated hazardous waste by the Environmental Protection Agency or State Hazardous Control Authority as defined in 40 CFR 260, 40 CFR 261, 40 CFR 262, 40 CFR 263, 40 CFR 264, 40 CFR 265, 40 CFR 266, 40 CFR 268, 40 CFR 270, 40 CFR 271, 40 CFR 272, 40 CFR 273, 40 CFR 279, and 40 CFR 280.

1.2.7 Hazardous Materials

Hazardous materials as defined in 49 CFR 171 and listed in 49 CFR 172.

Hazardous material is any material that:

a. Is regulated as a hazardous material per 49 CFR 173, or

b. Requires a Material Safety Data Sheet (MSDS) per 29 CFR 1910.120, or

c. During end use, treatment, handling, packaging, storage, transpiration, or disposal meets or has components that meet or have potential to meet the definition of a hazardous waste as defined by 40 CFR 261 Subparts A, B, C, or D.

Designation of a material by this definition, when separately regulated or controlled by other instructions or directives, does not eliminate the need for adherence to that hazard-specific guidance which takes precedence over this instruction for "control" purposes. Such material include ammunition,

weapons, explosive actuated devices, propellants, pyrotechnics, chemical and biological warfare materials, medical and pharmaceutical supplies, medical waste and infectious materials, bulk fuels, radioactive materials, and other materials such as asbestos, mercury, and polychlorinated biphenyls (PCBs). Nonetheless, the exposure may occur incident to manufacture, storage, use and demilitarization of these items.

1.2.8 Waste Hazardous Material (WHM)

Any waste material which because of its quantity, concentration, or physical, chemical, or infectious characteristics may pose a substantial hazard to human health or the environment and which has been so designated. Used oil not containing any hazardous waste, as defined above, falls under this definition.

1.2.9 Oily Waste

Those materials which are, or were, mixed with used oil and have become separated from that used oil. Oily wastes also means materials, including wastewaters, centrifuge solids, filter residues or sludges, bottom sediments, tank bottoms, and sorbents which have come into contact with and have been contaminated by, used oil and may be appropriately tested and discarded in a manner which is in compliance with other State and local requirements.

This definition includes materials such as oily rags, "kitty litter" sorbent clay and organic sorbent material. These materials may be land filled provided that:

a. It is not prohibited in other State regulations or local ordinances

b. The amount generated is "de minimus" (a small amount)

c. It is the result of minor leaks or spills resulting from normal process operations

d. All free-flowing oil has been removed to the practical extent possible

Large quantities of this material, generated as a result of a major spill or in lieu of proper maintenance of the processing equipment, are a solid waste. As a solid waste, a hazardous waste determination must be performed prior to disposal. As this can be an expensive process, it is recommended that this type of waste be minimized through good housekeeping practices and employee education.

1.2.10 Regulated Waste

Those solid waste that have specific additional Federal, state, or local controls for handling, storage, or disposal.

1.2.11 Class I Ozone Depleting Substance (ODS)

Class I ODS is defined in Section 602(a) of The Clean Air Act and includes the following chemicals:

chlorofluorocarbon-11 (CFC-11)
chlorofluorocarbon-12 (CFC-12)
chlorofluorocarbon-13 (CFC-13)
chlorofluorocarbon-111 (CFC-111)

chlorofluorocarbon-112 (CFC-112)
chlorofluorocarbon-113 (CFC-113)
chlorofluorocarbon-114 (CFC-114)
chlorofluorocarbon-115 (CFC-115)
chlorofluorocarbon-211 (CFC-211)
chlorofluorocarbon-212 (CFC-212)
chlorofluorocarbon-213 (CFC-213)
chlorofluorocarbon-214 (CFC-214)
chlorofluorocarbon-215 (CFC-215)
chlorofluorocarbon-216 (CFC-216)
chlorofluorocarbon-217 (CFC-217)
chlorofluorocarbon-500 (CFC-500)
chlorofluorocarbon-502 (CFC-502)
chlorofluorocarbon-503 (CFC-503)
halon-1211
halon-1301
halon-2402
carbon tetrachloride
methyl bromide
methyl chloroform

1.2.11.1 Universal Waste

The universal waste regulations streamline collection requirements for certain hazardous wastes in the following categories: batteries, pesticides, mercury-containing equipment (e.g., thermostats) and lamps (e.g., fluorescent bulbs). The rule is designed to reduce hazardous waste in the municipal solid waste (MSW) stream by making it easier for universal waste handlers to collect these items and send them for recycling or proper disposal. These regulations can be found at 40 CFR 273.

1.3 SUBMITTALS

Government approval is required for submittals with a "G" designation; submittals not having a "G" designation are for Contractor Quality Control approval. The following shall be submitted in accordance with Section 01 33 00.05 20 CONSTRUCTION SUBMITTAL PROCEDURES and Section 01 33 10.05 20 DESIGN SUBMITTAL PROCEDURES:

SD-01 Preconstruction Submittals

Preconstruction Survey; G

Solid Waste Management Plan and Permit; G

Regulatory Notifications; G

Environmental Management Plan; G

Storm Water Pollution Prevention Plan; G

Air Emissions Source Specification Data; G

Dirt and Dust Control Plan

Contractor Hazardous Material Inventory Log; G

SD-06 Test Reports

Laboratory Analysis

Erosion and Sediment Control Inspection Reports

Storm Water Inspection Reports for General Permit

Contractor 40 CFR employee training records

Solid Waste Management Report; G

SD-11 Closeout Submittals

Some of the records listed below are also required as part of other submittals. For the "Records" submittal, maintain on-site a separate three-ring Environmental Records binder and submit at the completion of the project. Make separate parts to the binder corresponding to each of the applicable sub items listed below.

Storm Water Pollution Prevention Plan compliance notebook; G

Waste Determination Documentation

Disposal Documentation for Hazardous and Regulated Waste

Contractor 40 CFR Employee Training Records

Solid Waste Management Permit

Solid Waste Management Report

Contractor Hazardous Material Inventory Log; G

Hazardous Waste/Debris Management

Regulatory Notifications

1.4 ENVIRONMENTAL PROTECTION REQUIREMENTS

Provide and maintain, during the life of the contract, environmental protection as defined. Plan for and provide environmental protective measures to control pollution that develops during normal construction practice. Plan for and provide environmental protective measures required to correct conditions that develop during the construction of permanent or temporary environmental features associated with the project. Comply with Federal, State, and local regulations pertaining to the environment, including water, air, solid waste, hazardous waste and substances, oily substances, and noise pollution.

The Contractor may be required to promptly conduct tests and procedures for the purpose of assessing whether construction operations are in compliance with Applicable Environmental Laws. Analytical work shall be done by qualified laboratories; and where required by law, the laboratories shall be certified.

1.4.1 Environmental Compliance Assessment Training and Tracking System (ECATTS)

The QC Manager is responsible for environmental compliance on projects unless an Environmental Manager is named. The QC Manager (and alternative

QC Manager) or Environmental Manager shall complete ECATTS training prior to starting respective portions of on-site work under this contract. If personnel changes occur for any of these positions after starting work, replacement personnel shall complete ECATTS training within 14 days of assignment to the project.

Submit an ECATTS certificate of completion for personnel who have completed the required "Environmental Compliance Assessment Training and Tracking System (ECATTS)" training. This training is web-based and can be accessed from any computer with Internet access using the following instructions.

Register for NAVFAC Environmental Compliance Training and Tracking System, by logging on to http://navfac.ecatts.com/. Obtain the password for registration from the Contracting Officer.

This training has been structured to allow contractor personnel to receive credit under this contract and also to carry forward credit to future contracts. Contractors shall ensure that the QC Manager (and alternate QC Manager) or Environmental Manager review their training plans for new modules or updated training requirements prior to beginning work. Some training modules are tailored for specific State regulatory requirements; therefore, Contractors working in multiple states will be requires to re-take modules tailored to the state where the contract work is being performed.

ECATTS is available for use by all contractor and subcontractor personnel associated with this project. These other personnel are encouraged (but not required) to take the training and may do so at their discretion.

1.4.2 Conformance with the Environmental Management System

The Contractor shall perform work under this contract consistent with the policy and objectives identified in the installation's Environmental Management System (EMS). The Contractor shall perform work in a manner that conforms to objectives and targets, environmental programs and operational controls identified by the EMS. The Contractor will provide monitoring and measurement information as necessary to address environmental performance relative to environmental, engery, and transportation management goals. In the event an EMS nonconformance or environmental noncompliance associated with the contracted services, tasks, or actions occurs, the Contractor shall take corrective and/or preventative actions. In addition, the Contractor shall ensure that its employees are aware of their roles and responsibilities under the EMS and how these EMS roles and responsibilites affect work performed under the contract.

The Contractor is responsible for ensuring that their employees receive applicable environmental and occupational health and safety training, and keep up to date on regulatory required specific training for the type of work to be conducted onsite. All on-site Contractor personnel, and their subcontractor personnel, performing tasks that have the potential to cause a significant environmental impact shall be competent on the basis of appropriate education, training or experience. Upon contract award, the Contracting Officer's Representative will notify the installation's EMS coordinator to arrange EMS training. Refer to Section 01 57 19.01 20, Supplemental Temporary Environmental Controls for additional site specific EMS requirements related to construction. The installation's EMS coordinator shall identify training needs associated with environmental aspects and the EMS, and arrange training or take other action to meet these needs. The Contractor shall provide training documentation to the

Contracting Officer. The EMS coordinator shall retain associated records.

1.5 QUALITY ASSURANCE

1.5.1 Preconstruction Survey

Perform a Preconstruction Survey of the project site with the Contracting Officer, and take photographs showing existing environmental conditions in and adjacent to the site. Submit a report for the record.

1.5.2 Regulatory Notifications

The Contractor is responsible for all regulatory notification requirements in accordance with Federal, State and local regulations. In cases where the Navy must also provide public notification (such as stormwater permitting), the Contractor must coordinate with the Contracting Officer. The Contractor shall submit copies of all regulatory notifications to the Contracting Officer prior to commencement of work activities. Typically, regulatory notifications must be provided for the following (this listing is not all inclusive): demolition, renovation, NPDES defined site work, remediation of controlled substances (asbestos, hazardous waste, lead paint).

1.5.3 Environmental Brief

Attend an environmental brief to be included in the preconstruction meeting. Provide the following information: types, quantities, and use of hazardous materials that will be brought onto the activity; types and quantities of wastes/wastewater that may be generated during the contract. Discuss the results of the Preconstruction Survey at this time.

Prior to initiating any work on site, meet with the Contracting Officer and activity environmental staff to discuss the proposed Environmental Management Plan. Develop a mutual understanding relative to the details of environmental protection, including measures for protecting natural resources, required reports, required permits, permit requirements, and other measures to be taken.

1.5.4 Environmental Manager

Appoint in writing an Environmental Manager for the project site. The Environmental Manager will be directly responsible for coordinating contractor compliance with Federal, State, local, and station requirements. The Environmental Manager will ensure compliance with Hazardous Waste Program requirements (including hazardous waste handling, storage, manifesting, and disposal); implement the Environmental Management Plan; ensure that all environmental permits are obtained, maintained, and closed out; ensure compliance with Storm Water Program Management requirements; ensure compliance with Hazardous Materials (storage, handling, and reporting) requirements; and coordinate any remediation of regulated substances (lead, asbestos, PCB transformers). This can be a collateral position; however the person in this position must be trained to adequately accomplish the following duties: ensure waste segregation and storage compatibility requirements are met; inspect and manage Satellite Accumulation areas; ensure only authorized personnel add wastes to containers; ensure all Contractor personnel are trained in 40 CFR requirements in accordance with their position requirements; coordinate removal of waste containers; and maintain the Environmental Records binder and required documentation, including environmental permits compliance and

close-out.

1.5.5 Contractor 40 CFR Employee Training Records

Prepare and maintain employee training records throughout the term of the contract meeting applicable 40 CFR requirements. The Contractor will ensure every employee completes a program of classroom instruction or on-the-job training that teaches them to perform their duties in a way that ensures compliance with Federal, State and local regulatory requirements for RCRA Large Quantity Generator. The Contractor will provide a Position Description for each employee, by subcontractor, based on the Davis-Bacon Wage Rate designation or other equivalent method, evaluating the employee's association with hazardous and regulated wastes. This Position Description will include training requirements as defined in 40 CFR 265 for a Large Quantity Generator facility. Submit these training records to the Contracting Officer at the conclusion of the project, unless otherwise directed.

PART 2 PRODUCTS

Not Used.

PART 3 EXECUTION

3.1 ENVIRONMENTAL MANAGEMENT PLAN

Prior to initiating any work on site, the Contractor will meet with the Contracting Officer to discuss the proposed Environmental Protection Plan and develop a mutual understanding relative to the details of environmental protection, including measures for protecting natural resources, required reports, and other measures to be taken. The Contractor's Environmental Plan shall incorporate construction related objectives and targets from the installation's Environmental Management System. The Environmental Management Plan will be submitted in the following format and shall include the elements specified below.

a. Description of the Environmental Management Plan

(1) General overview and purpose

(a) A brief description of each specific plan required by environmental permit or elsewhere in this contract.

(b) The duties and level of authority assigned to the person(s) on the job site that oversee environmental compliance.

(c) A copy of any standard or project specific operating procedures that will be used to effectively manage and protect the environment on the project site.

(d) Communication and training procedures that will be used to convey environmental management requirements to contractor employees and subcontractors.

(e) Emergency contact information contact information (office phone number, cell phone number, and e-mail address).

(2) General site information

(3) A letter signed by an officer of the firm appointing the Environmental Manager and stating that he/she is responsible for managing and implementing the Environmental Program as described in this contract. Include in this letter the Environmental Manager's authority to direct the removal and replacement of non-conforming work.

b. Management of Natural Resources

(1) Land resources

(2) Tree protection

(3) Replacement of damaged landscape features

(4) Temporary construction

(5) Stream crossings

(6) Fish and wildlife resources

(7) Wetland areas

c. Protection of Historical and Archaeological Resources

(1) Objectives

(2) Methods

d. Storm Water Management and Control

(1) Ground cover

(2) Erodible soils

(3) Temporary measures

(a) Mechanical retardation and control of runoff

(b) Vegetation and mulch

(4) Effective selection, implementation and maintenance of Best Management Practices (BMPs).

e. Protection of the Environment from Waste Derived from Contractor Operations

(1) Control and disposal of solid and sanitary waste. If Section 01 74 19.05 20 is included in the contract, submit the plan required by that section as part of the Environmental Management Plan.

(2) Control and disposal of hazardous waste (Hazardous Waste Management Section)

This item will consist of the management procedures for all hazardous waste to be generated. The elements of those procedures will coincide with the Activity Hazardous Waste Management Plan. A copy of the Activity Hazardous Waste Management Plan will be provided by the Contracting Officer. As a minimum, include the

following:

(a) Procedures to be employed to ensure a written waste determination is made for appropriate wastes which are to be generated;

(b) Sampling/analysis plan;

(c) Methods of hazardous waste accumulation/storage (i.e., in tanks and/or containers);

(d) Management procedures for storage, labeling, transportation, and disposal of waste (treatment of waste is not allowed unless specifically noted);

(e) Management procedures and regulatory documentation ensuring disposal of hazardous waste complies with Land Disposal Restrictions (40 CFR 268);

(f) Management procedures for recyclable hazardous materials such as lead-acid batteries, used oil, and the like;

(g) Used oil management procedures in accordance with 40 CFR 279;

(h) Pollution prevention\hazardous waste minimization procedures;

(i) Plans for the disposal of hazardous waste by permitted facilities;

(j) Procedures to be employed to ensure all required employee training records are maintained.

f. Prevention of Releases to the Environment

(1) Procedures to prevent releases to the environment

(2) Notifications in the event of a release to the environment

g. Regulatory Notification and Permits

(1) List what notifications and permit applications must be made. Demonstrate that those permits have been obtained by including copies of all applicable, environmental permits.

3.1.1 Environmental Protection Plan Review

Within thirty days after the Contract award date, submit the proposed Environmental Management Plan for further discussion, review, and approval. Commencement of work will not begin until the environmental management plan has been approved.

3.1.2 Licenses and Permits

Obtain licenses and permits pursuant to the "Permits and Responsibilities" FAR Clause 52.236-7.

Only an air emissions permit will be obtained by the Contracting Officer.

Where required by the State regulatory authority, the inspections and

certifications will be provided through the services of a Professional Engineer (PE), registered in the State where the work is being performed. As a part of the quality control plan, which is required to be submitted for approval by the quality control section, provide a sub item containing the name, appropriate professional registration or licence number, address, and telephone number of the professionals or other qualified persons who will be performing the inspections and certifications for each permit.

3.2 PROTECTION OF NATURAL RESOURCES

Preserve the natural resources within the project boundaries and outside the limits of permanent work. Restore to an equivalent or improved condition upon completion of work. Confine construction activities to within the limits of the work indicated or specified. If the work is near streams, lakes, or other waterways, conform to the national permitting requirements of the Clean Water Act.

Do not disturb fish and wildlife. Do not alter water flows or otherwise significantly disturb the native habitat adjacent to the project and critical to the survival of fish and wildlife, except as indicated or specified.

Except in areas to be cleared, do not remove, cut, deface, injure, or destroy trees or shrubs without the Contracting Officer's permission. Do not fasten or attach ropes, cables, or guys to existing nearby trees for anchorages unless authorized by the Contracting Officer. Where such use of attached ropes, cables, or guys is authorized, the Contractor will be responsible for any resultant damage.

Protect existing trees which are to remain and which may be injured, bruised, defaced, or otherwise damaged by construction operations. Remove displaced rocks from uncleared areas. By approved excavation, remove trees with 30 percent or more of their root systems destroyed. Remove trees and other landscape features scarred or damaged by equipment operations, and replace with equivalent, undamaged trees and landscape features. Obtain Contracting Officer's approval before replacement.

The Contracting Officer's approval is required before any equipment will be permitted to ford live streams. In areas where frequent crossings are required, install temporary culverts or bridges. Obtain Contracting Officer's approval prior to installation. Remove temporary culverts or bridges upon completion of work, and repair the area to its original condition unless otherwise required by the Contracting Officer.

3.2.1 Erosion and Sediment Control Measures

3.2.1.1 Burnoff

Burnoff of the ground cover is not permitted.

3.2.1.2 Protection of Erodible Soils

Immediately finish the earthwork brought to a final grade, as indicated or specified. Immediately protect the side slopes and back slopes upon completion of rough grading. Plan and conduct earthwork to minimize the duration of exposure of unprotected soils.

3.2.1.3 Temporary Protection of Erodible Soils

Immediately finish the earthwork brought to a final grade, as indicated or specified. Immediately protect the side slopes and back slopes upon completion of rough grading. Plan and conduct earthwork to minimize the duration of exposure of unprotected soils. The Contractor is responsible for fully executing the plans and procedures approved in the Contractor's Erosion Control plan. Provide temporary protection of disturbed soils in accordance with North Carolina Sediment Control Commission (NCSCC), Erosion and Sediment Control Planning and Design Manual.

3.2.2 Erosion and Sediment Control Inspection Reports

Submit "Erosion and Sediment Control Inspection Reports" (E&S) (form provided at the pre-construction conference) and Storm Water Inspection Reports for General Permit NCG010000 - Land Disturbing Activities (form provided at http://h20.enr.state.nc.us/su/PDF_Files/SW_General_Permits/NCG01_Inspect_log.pdf) to the Contracting Officer once every 7 calendar days and within 24 hours of a storm event that produces 0.5 inch or more of rain.

Note erosion control inspection reports may be compiled as part of a stormwater pollution prevention plan inspection reports if applicable.

3.2.2.1 Storm Water Pollution Prevention Plan

In conjunction with the Contracting Officer, the Contractor shall apply for and obtain coverage under the North Carolina General Pollution Discharge and Elimination System General Permit for discharges of stormwater from Construction Activities, when 10,000 square feet or more, of land area is disturbed by construction or related construction support operations, including clearing, grubbing, grading, excavation, soil or gravel lay down areas, and demolition that exposes soil.

In North Carolina, the NPDES General Permit is issued with the Erosion and Sediment Control Permit; no separate application is necessary. Coverage under this permit required the D-B Contractor to prepare a financial responsibility/ownership form and forward to MCAS Cherry Point for concurrence prior to submittal. In addition, the Contractor shall provide the permit fee to the North Carolina Department of Environmental and Natural Resources (NCDENR) before any land disturbing activities begin. The Contractor shall file for permit coverage on behalf of the Contracting Officer and himself and file a Notice of Termination once construction is complete and the site is stabilized with a final sustainable cover.

Under the terms and conditions of the permit, the Contractor may be required to install, inspect, maintain best management practices (BMPs), and submit stormwater BMP inspection reports and stormwater pollution prevention plan inspection reports. The Contractor shall ensure construction operations and management are constantly in compliance with the terms and conditions of the general permit for storm water discharges from construction activities.

a. The SWPPP shall:

(1) Identify potential sources of pollution which may be reasonably expected to affect the quality of storm water discharge from the site.

(2) Describe and ensure implementation of practices which will be used to reduce the pollutants in storm water discharge from the site.

(3) Ensure compliance with terms of the EPA or State general permit for storm water discharge.

(4) Select applicable best management practices from EPA 833-R-060-04.

(5) Include a completed copy of the Registration Statement, BMP Inspection Report Template and Notice of Termination except for the effective date.

3.2.2.2 Storm Water Pollution Prevention Plan Compliance Notebook

The contractor shall create and maintain a three binder of documents that demonstrate compliance with the Stormwater Construction Activity permit. The binder shall include a copy of the permit Registration Statement, proof of permit fee payment, SWPPP and SWPPP update amendments, inspection reports, copies of correspondence with the North Carolina Department of Environmental and Natural Resources (NCDENR) and a copy of the permit Notice of Termination. At the completion of the project the folder shall become the property of the Government. The compliance notebook shall be provided to Contracting Officer. An advance copy of the Registration Statement shall be provided to the Contracting Officer immediately after the form is presented to the permitting agency.

3.2.3 Stormwater Drainage and Construction Dewatering

There will be no discharge of excavation ground water to the sanitary sewer, storm drains, or to the river without prior specific authorization of the Environmental Division in writing. Discharge of hazardous substances will not be permitted under any circumstances.

Construction site runoff will be prevented from entering any storm drain or the river directly by the use of straw bales or other method suitable to the Environmental Division. Contractor will provide erosion protection of the surrounding soils.

Construction Dewatering shall not be discharged to the sanitary sewer. If the construction dewatering is noted or suspected of being contaminated, it may only be released to the storm drain system if the discharge is specifically permitted. Authorization for any contaminated groundwater release shall be obtained in advance from the base Environmental Officer. Discharge of hazardous substances will not be permitted under any circumstances.

3.2.4 Wetlands

Do not enter, disturb, destroy, or allow discharge of contaminants into any wetlands except as authorized herein. The protection of wetlands is the Contractor's responsibility. Authorization to enter specific wetlands identified will not relieve the Contractor from any obligation to protect other wetlands within, adjacent to, or in the vicinity of the construction site and associated boundaries. Contractor shall ensure wetland boundaries are clearly marked prior to any clearing and grubbing operations. The wetland delineation will be conducted on site by the design engineer with assistance as needed from the Army Corps of Engineers and the base Environmental Management Division.

3.2.5 Air Emissions Permit Application - Government Prepared

This contract may include the design and/or construction of regulated air emission sources that require an air quality permit for construction and operation in accordance with North Carolina Department of Environment and Natural Resources (NCDENR) Division of Air Quality (NCDAQ) permitting procedures. The government will prepare a permit application package for all applicable emission sources in the contract, however the contractor is required to coordinate submission of all Air Emissions Source Specification Data necessary for the preparation of the application package a minimum of 180 calendar days prior to any construction or installation of any emission source point associated with this project. Marine Corps Base, Camp Lejeune and Marine Corps Air Station, New River, have been issued one Clean Air Act Title V Construction and Operation Permit issued by NCDAQ. The facility is considered a major source for both criteria pollutants and federally listed Hazardous Air Pollutant (HAP). The facility is also subject to North Carolina Toxic Air Pollutant (TAP) regulations to include requirements for facility wide air dispersion modeling and facility fence line emission limits for certain pollutants. Typical emission sources requiring a permit include:

a. Boilers (Greater than 400,000 Btu/hr)

(1) Boilers less than 10 MMBtu/hr are considered insignificant per NC regulations (15A NCAC 2Q.0503), but may still require analysis & permitting.

b. Storage Tanks

c. Fuel Dispensing

d. Emergency Generators

e. Non-Emergency Generators

f. Engine Testing Stations or Stands (where engine is removed from mobile vehicle/craft for testing)

g. Fire Training Pits

h. Woodworking/Grinding

i. Abrasive Blasting

j. Paint Stripping

k. Parts Cleaners/Ovens

l. Surface Coating (Paint Booths)

m. Epoxy Curing Benches

n. Remediation Systems

o. Welding/Soldering

p. Refrigerant Recovery/Recycling

3.2.5.1 Regulations Applicability

The permit application will require an evaluation of the applicability of the following regulations:

a. New Source Review (NSR) / Prevention of Significant Deterioration (PSD)(40 CFR 51, 40 CFR 52)

b. New Source Performance Standards (NSPS) (40 CFR 60)

(1) Possible source categories include but are not limited to boilers & internal combustion engines/generators

c. National Emission Standards for Hazardous Air Pollutants (NESHAP) (40 CFR 61,40 CFR 63)

(1) Possible source categories include but are not limited to Reciprocating Internal Combustion Engines (RICE)

d. North Carolina Air Toxics Program (15A NCAC 2D.1100, 2Q.0700)

(1) Many new air emission sources may require air dispersion modeling to receive a permit and/or demonstrate compliance. A draft rule is in the North Carolina regulatory process that would remove the exemption of combustion sources (e.g. boilers, generators) from the air toxics program effective for sources permitted after March 1, 2009 also requiring modeling for these types of sources. Once passed this will impose additional permitting requirements on the facility. As of May 2009 this rule had not been passed or finalized. Projects including combustion sources should be coordinated on a case-by-case basis with the NAVFAC IPT and the installation Environmental Management Division.

3.2.5.2 Type Of Permit Required

Based on preliminary review, it is not anticipated that new emission sources will require New Source Review (NSR) permitting; however, potential air emission rates for new emission sources may exceed Prevention of Significant Deterioration (PSD) thresholds, therefore PSD avoidance permit conditions and/or operating limits (e.g. fuel usage or operating hour limits).

3.2.5.3 Permit Application Package

The permit application package will include the following:

a. Clear, concise, & explanatory supporting documentation & narrative

b. Required permit application forms (Title V)

c. Air emissions calculations

d. Equipment drawings and specifications

e. Facility diagrams and/or maps

3.2.5.4 Time Allowance For Permit

The contractor should allow for approximately six months from the time of

permit application submission to permit issuance. Construction of an air emission source cannot begin without a permit or a waiver, and operation of the source cannot begin without a permit.

3.3 HISTORICAL AND ARCHAEOLOGICAL RESOURCES

Carefully protect in-place and report immediately to the Contracting Officer historical and archaeological items or human skeletal remains discovered in the course of work. Upon discovery, notify the Contracting Officer. Stop work in the immediate area of the discovery until directed by the Contracting Officer to resume work. The Government retains ownership and control over historical and archaeological resources.

3.4 SOLID WASTE MANAGEMENT PLAN and PERMIT

Provide to the contracting officer written notification of the quantity of solid waste/debris that is anticipated to be generated by construction. Include in the report the locations where various types of waste will be disposed or recycled. Include letters of acceptance or as applicable, submit one copy of a State and local Solid Waste Management Permit or license showing such agency's approval of the disposal plan before transporting wastes off Government property.

3.4.1 Solid Waste Management Report

Monthly, submit a solid waste disposal report to the Contracting Officer. For each waste, the report will state the classification (using the definitions provided in this section), amount, location, and name of the business receiving the solid waste.

The Contractor will include copies of the waste handling facilities' weight tickets, receipts, bills of sale, and other sales documentation. In lieu of sales documentation, the Contractor may submit a statement indicating the disposal location for the solid waste which is signed by an officer of the Contractor firm authorized to legally obligate or bind the firm. The sales documentation or Contractor certification will include the receiver's tax identification number and business, EPA or State registration number, along with the receiver's delivery and business addresses and telephone numbers. For each solid waste retained by the Contractor for his own use, the Contractor will submit on the solid waste disposal report the information previously described in this paragraph. Prices paid or received will not be reported to the Contracting Officer unless required by other provisions or specifications of this Contract or public law.

3.4.2 Control and Management of Solid Wastes

Pick up solid wastes, and place in covered containers which are regularly emptied. Do not prepare or cook food on the project site. Prevent contamination of the site or other areas when handling and disposing of wastes. At project completion, leave the areas clean. Recycling is encouraged and can be coordinated with the Contracting Officer and the activity recycling coordinator. Remove all solid waste (including non-hazardous debris) from Government property and dispose off-site at an approved landfill. Solid waste disposal off-site must comply with most stringent local, State, and Federal requirements including 40 CFR 241, 40 CFR 243, and 40 CFR 258.

Manage spent hazardous material used in construction, including but not limited to, aerosol cans, waste paint, cleaning solvents, contaminated

brushes, and used rags, as per environmental law.

3.5 WASTE DETERMINATION DOCUMENTATION

Complete a Waste Determination form (provided at the pre-construction conference) for all contractor derived wastes to be generated. Base the waste determination upon either a constituent listing from the manufacturer used in conjunction with consideration of the process by which the waste was generated, EPA approved analytical data, or laboratory analysis (Material Safety Data Sheets (MSDS) by themselves are not adequate). Attach all support documentation to the Waste Determination form. As a minimum, a Waste Determination form must be provided for the following wastes (this listing is not all inclusive): oil and latex based painting and caulking products, solvents, adhesives, aerosols, petroleum products, and all containers of the original materials.

3.6 CONTRACTOR HAZARDOUS MATERIAL INVENTORY LOG

Submit the "Contractor Hazardous Material Inventory Log"(found at: http://www.wbdg.org/ccb/NAVGRAPH/graphtoc.pdf), which provides information required by (EPCRA Sections 312 and 313) along with corresponding Material Safety Data Sheets (MSDS) to the Contracting Officer at the start and at the end of construction (30 days from final acceptance), and update no later than January 31 of each calendar year during the life of the contract. Documentation for any spills/releases, environmental reports or off-site transfers may be requested by the Contracting Officer.

3.6.1 Disposal Documentation for Hazardous and Regulated Waste

Manifest, pack, ship and dispose of hazardous or toxic waste and universal waste that is generated as a result of construction in accordance with the generating facilities generator status under the Recourse Conservation and Recovery Act. Contact the Contracting Officer for the facility RCRA identification number that is to be used on each manifest.

Submit a copy of the applicable EPA and or State permit(s), manifest(s), or license(s) for transportation, treatment, storage, and disposal of hazardous and regulated waste by permitted facilities. Hazardous or toxic waste manifest must be reviewed, signed, and approved by the Navy before the Contractor may ship waste. To obtain specific disposal instructions the Contractor must coordinate with the Activity environmental office. Refer to Section 01 57 19.01 20 for the Activity Point of Contact information.

3.7 POLLUTION PREVENTION/HAZARDOUS WASTE MINIMIZATION

Minimize the use of hazardous materials and the generation of hazardous waste. Include procedures for pollution prevention/ hazardous waste minimization in the Hazardous Waste Management Section of the Environmental Management Plan. Consult with the activity Environmental Office for suggestions and to obtain a copy of the installation's pollution prevention/hazardous waste minimization plan for reference material when preparing this part of the plan. If no written plan exists, obtain information by contacting the Contracting Officer. Describe the types of the hazardous materials expected to be used in the construction when requesting information.

3.8 WHM/HW MATERIALS PROHIBITION

No waste hazardous material or hazardous waste shall be disposed of on government property. No hazardous material shall be brought onto government property that does not directly relate to requirements for the performance of this contract. The government is not responsible for disposal of Contractor's waste material brought on the job site and not required in the performance of this contract. The intent of this provision is to dispose of that waste identified as waste hazardous material/hazardous waste as defined herein that was generated as part of this contract and existed within the boundary of the Contract limits and not brought in from offsite by the Contractor. Incidental materials used to support the contract including, but not limited to aerosol cans, waste paint, cleaning solvents, contaminated brushes, rags, clothing, etc. are the responsibility of the Contractor. The list is illustrative rather than inclusive. The Contractor is not authorized to discharge any materials to sanitary sewer, storm drain, or to the river or conduct waste treatment or disposal on government property without written approval of the Contracting Officer.

3.9 HAZARDOUS MATERIAL MANAGEMENT

No hazardous material shall be brought onto government property that does not directly relate to requirements for the performance of this contract.

Include hazardous material control procedures in the Safety Plan. Address procedures and proper handling of hazardous materials, including the appropriate transportation requirements. Submit a MSDS and estimated quantities to be used for each hazardous material to the Contracting Officer prior to bringing the material on base. Typical materials requiring MSDS and quantity reporting include, but are not limited to, oil and latex based painting and caulking products, solvents, adhesives, aerosol, and petroleum products. At the end of the project, provide the Contracting Officer with the maximum quantity of each material that was present at the site at any one time, the dates the material was present, the amount of each material that was used during the project, and how the material was used. Ensure that hazardous materials are utilized in a manner that will minimize the amount of hazardous waste that is generated. Ensure that all containers of hazardous materials have NFPA labels or their equivalent. Keep copies of the MSDS for hazardous materials on site at all times and provide them to the Contracting Officer at the end of the project. Certify that all hazardous materials removed from the site are hazardous materials and do not meet the definition of hazardous waste per 40 CFR 261.

3.10 PETROLEUM PRODUCTS AND REFUELING

Conduct the fueling and lubricating of equipment and motor vehicles in a manner that protects against spills and evaporation. Manage all used oil generated on site in accordance with 40 CFR 279. Determine if any used oil generated while on-site exhibits a characteristic of hazardous waste. Used oil containing 1000 parts per million of solvents will be considered a hazardous waste and disposed of at Contractor's expense. Used oil mixed with a hazardous waste will also be considered a hazardous waste.

3.10.1 Oily and Hazardous Substances

Prevent oil or hazardous substances from entering the ground, drainage areas, or navigable waters. In accordance with 40 CFR 112, surround all

temporary fuel oil or petroleum storage tanks with a temporary berm or containment of sufficient size and strength to contain the contents of the tanks, plus 10 percent freeboard for precipitation. The berm will be impervious to oil for 72 hours and be constructed so that any discharge will not permeate, drain, infiltrate, or otherwise escape before cleanup occurs.

3.10.2 Inadvertent Discovery of Petroleum Contaminated Soil or Hazardous Wastes

If petroleum contaminated soil or suspected hazardous waste is found during construction that was not identified in the contract documents, the contractor shall immediately notify the contracting officer. The contractor shall not disturb this material until authorized by the contracting officer.

3.11 FUEL TANKS

Petroleum products and lubricants required to sustain up to 30 days of construction activity may be kept on site. Storage and refilling practices shall comply with 40 CFR 112. Secondary containment shall be provided and be no less than 110 percent of the tank volume plus five inches of free-board. If a secondary berm is used for containment then the berm shall be impervious to oil for 72 hours and be constructed so that any discharge will not permeate, drain, infiltrate, or otherwise escape before cleanup occurs. Drips pans are required and the tanks must be covered during inclement weather.

3.12 RELEASES/SPILLS OF OIL AND HAZARDOUS SUBSTANCES

Exercise due diligence to prevent, contain, and respond to spills of hazardous material, hazardous substances, hazardous waste, sewage, regulated gas, petroleum, lubrication oil, and other substances regulated by environmental law. Maintain spill cleanup equipment and materials at the work site. In the event of a spill, take prompt, effective action to stop, contain, curtail, or otherwise limit the amount, duration, and severity of the spill/release. In the event of any releases of oil and hazardous substances, chemicals, or gases; immediately (within 15 minutes) notify the Base or Activity Fire Department, the activity's Command Duty Officer, and the Contracting Officer. If the contractor's response is inadequate, the Navy may respond. If this should occur, the contractor will be required to reimburse the government for spill response assistance and analysis.

The Contractor is responsible for verbal and written notifications as required by the federal 40 CFR 355, State, local regulations and Navy Instructions. Spill response will be in accordance with 40 CFR 300 and applicable State and local regulations. Contain and clean up these spills without cost to the Government. If Government assistance is requested or required, the Contractor will reimburse the Government for such assistance. Provide copies of the written notification and documentation that a verbal notification was made within 20 days.

Maintain spill cleanup equipment and materials at the work site. Clean up all hazardous and non-hazardous (WHM) waste spills. The Contractor shall reimburse the government for all material, equipment, and clothing generated during any spill cleanup. The Contractor shall reimburse the government for all costs incurred including sample analysis materials, equipment, and labor if the government must initiate its own spill cleanup

procedures, for Contractor responsible spills, when:

a. The Contractor has not begun spill cleanup procedure within one hour of spill discovery/occurrence, or

b. If, in the government's judgment, the Contractor's spill cleanup is not adequately abating life threatening situation and/or is a threat to any body of water or environmentally sensitive areas.

3.13 CONTROL AND MANAGEMENT OF HAZARDOUS WASTES

3.13.1 Facility Hazardous Waste Generator Status

MCAS Cherry Point is designated as a Large Quantity Generator. All work conducted within the boundaries of this activity must meet the regulatory requirements of this generator designation. The Contractor will comply with all provisions of Federal, State and local regulatory requirements applicable to this generator status regarding training and storage, handling, and disposal of all construction derived wastes.

3.13.2 Hazardous Waste/Debris Management

Identify all construction activities which will generate hazardous waste/debris. Provide a documented waste determination for all resultant waste streams. Hazardous waste/debris will be identified, labeled, handled, stored, and disposed of in accordance with all Federal, State, and local regulations including 40 CFR 261, 40 CFR 262, 40 CFR 263, 40 CFR 264, 40 CFR 265, 40 CFR 266, and 40 CFR 268.

Hazardous waste will also be managed in accordance with the approved Hazardous Waste Management Section of the Environmental Protection Plan. Store hazardous wastes in approved containers in accordance with 49 CFR 173 and 49 CFR 178. Hazardous waste generated within the confines of Government facilities will be identified as being generated by the Government.

Prior to removal of any hazardous waste from Government property, all hazardous waste manifests must be signed by activity personnel from the Station Environmental Office. No hazardous waste will be brought onto Government property. Provide to the Contracting Officer a copy of waste determination documentation for any solid waste streams that have any potential to be hazardous waste or contain any chemical constituents listed in 40 CFR 372-SUBPART D. For hazardous wastes spills, verbally notify the Contracting Officer immediately.

3.13.2.1 Regulated Waste Storage/Satellite Accumulation/90 Day Storage Areas

If the work requires the temporary storage/collection of regulated or hazardous wastes, the Contractor will request the establishment of a Regulated Waste Storage Area, a Satellite Accumulation Area, or a 90 Day Storage Area at the point of generation. The Contractor must submit a request in writing to the Contracting Officer providing the following information:

Contract Number _____ Contractor _____

Haz/Waste or Regulated Waste POC _____ Phone Number _____

Type of Waste _____ Source of Waste _____

Emergency POC _____ Phone Number _____

Location of the Site: _____
(Attach Site Plan to the Request)

Attach a waste determination form. Allow ten working days for processing this request. The designated area where waste is being stored shall be barricaded and a sign identifying as follows:

"DANGER - UNAUTHORIZED PERSONNEL KEEP OUT"

3.13.2.2 Sampling and Analysis of HW

a. Waste Sampling

Sample waste in accordance with EPA 530/F-93/004. Each sampled drum or container will be clearly marked with the Contractor's identification number and cross referenced to the chemical analysis performed.

b. Laboratory Analysis

Follow the analytical procedure and methods in accordance with the 40 CFR 261. The Contractor will provide all analytical results and reports performed to the Contracting Officer.

c. Analysis Type

Identify waste hazardous material/hazardous waste by analyzing for the following properties as a minimum: ignitability, corrosiveness, total chlorides, BTU value, PCBs, TCLP for heavy metals, and cyanide.

3.13.2.3 Asbestos Certification

Items, components, or materials disturbed by or included in work under this contract may involve asbestos. Other materials in the general area around where work will be performed may contain asbestos. All thermal insulation, in all work areas, should be considered to be asbestos unless positively identified by conspicuous tags or previous laboratory analysis certifying them as asbestos free.

Inadvertent discovery of non-disclosed asbestos that will result in an abatement action requires a change in scope before proceeding. Upon discovery of asbestos containing material not identified in the contract documents, the Contractor shall immediately stop all work that would generate further damage to the material, evacuate the asbestos exposed area, and notify the Contracting Officer for resolution of the situation prior to resuming normal work activities in the affected area. The Contractor will not remove or perform work on any asbestos containing materials without the prior approval of the Contracting Officer. The Contractor will not engage in any activity, which would remove or damage such materials or cause the generation of fibers from such materials.

Asbestos containing waste shall be managed and disposed of in accordance with applicable environmental law. Asbestos containing waste shall be manifested and the manifest provided to the Contracting Officer.

3.13.2.4 Hazardous Waste Disposal

No hazardous, toxic, or universal waste shall be disposed or hazardous material abandoned on government property. And unless otherwise other wise noted in this contract, the government is not responsible for disposal of Contractor generated waste material. The disposal of incidental materials used to accomplish the work including, but not limited to aerosol cans, waste paint, cleaning solvents, contaminated brushes, rags, clothing, etc. are the responsibility of the Contractor. The list is illustrative rather than inclusive.

The Contractor is not authorized to discharge any materials to sanitary sewer, storm drain, or water way or conduct waste treatment or disposal on government property without written approval of the Contracting Officer.

Control of stored waste, packaging, sampling, analysis, and disposal will be determined by the details in the contract. The requirements for jobs in the following paragraphs will be used as the guidelines for disposal of any hazardous waste generated.

a. Responsibilities for Contractor's Disposal

Contractor responsibilities include any generation of WHM/HW requiring Contractor disposal of solid waste or liquid.

(1) The Contractor agrees to provide all service necessary for the final treatment/disposal of the hazardous material/waste in accordance with all local, State and Federal laws and regulations, and the terms and conditions of the contract within sixty (60) days after the materials have been generated. These services will include all necessary personnel, labor, transportation, packaging, detailed analysis (if required for disposal, and/or transportation, including manifesting or completing waste profile sheets, equipment, and the compilation of all documentation is required).

(2) Contain all waste in accordance with 40 CFR 260, 40 CFR 261, 40 CFR 262, 40 CFR 263, 40 CFR 264, 40 CFR 265, 40 CFR 266, 40 CFR 268, 40 CFR 270, 40 CFR 272, 40 CFR 273, 40 CFR 279, 40 CFR 280, and 40 CFR 761.

(3) Obtaining a representative sample of the material generated for each job done to provide waste stream determination.

(4) Analyzing for each sample taken and providing analytical results to the Contracting Officer. Provide two copies of the results.

(5) Determine the DOT proper shipping names for all waste (each container requiring disposal) and will demonstrate how this determination is developed and supported by the sampling and analysis requirements contained herein to the Contracting Officer.

Contractor Disposal Turn-In Requirements

For any waste hazardous materials or hazardous waste generated which requires the Contractor to dispose of, the following conditions must be complied with in order to be acceptable for disposal:

a. Drums compatible with waste contents and drums meet DOT requirements

for 49 CFR 173 for transportation of materials.

b. Drums banded to wooden pallets. No more than three (3) 55 gallon drums to a pallet, or two (2) 85 gallon over packs.

c. Band using 1-1/4 inch minimum band on upper third of drum.

d. Recovery materials label (provided by Code 106.321) located in middle of drum, filled out to indicate actual volume of material, name of material manufacturer, other vendor information as available.

e. Always have three (3) to five (5) inches of empty space above volume of material. This space is called 'outage'.

3.13.3 Class I ODS Prohibition

Class I ODS as defined and identified herein will not be used in the performance of this contract, nor be provided as part of the equipment. This prohibition will be considered to prevail over any other provision, specification, drawing, or referenced documents. Regulations related to the protection of stratosphere ozone may be found in 40 CFR 82.

Heating and air conditioning technicians must be certified through an EPA-approved program. Copies of certifications shall be maintained at the employees' place of business and be carried as a wallet card by the technician, as provided by environmental law. Accidental venting of a refrigerant is a release and shall be reported to the Contracting Officer.

3.13.3.1 Universal Waste/e-Waste Management

Universal waste including but not limited to some mercury containing building products such florescent lamps, mercury vapor lamps, high pressure sodium lamps, CRTs, batteries, aerosol paint containers, electrical equipment containing PCBs, and consumed electronic devices, shall be managed in accordance with applicable environmental law and installation instructions.

3.14 DUST CONTROL

Keep dust down at all times, including during nonworking periods. Sprinkle or treat, with dust suppressants, the soil at the site, haul roads, and other areas disturbed by operations. Dry power brooming will not be permitted. Instead, use vacuuming, wet mopping, wet sweeping, or wet power brooming. Air blowing will be permitted only for cleaning nonparticulate debris such as steel reinforcing bars. Only wet cutting will be permitted for cutting concrete blocks, concrete, and bituminous concrete. Do not unnecessarily shake bags of cement, concrete mortar, or plaster.

3.14.1 Dirt and Dust Control Plan

Submit truck and material haul routes along with a plan for controlling dirt, debris, and dust on base roadways. As a minimum, identify in the plan the subcontractor and equipment for cleaning along the haul route and measures to reduce dirt, dust, and debris from roadways.

3.15 NOISE

Make the maximum use of low-noise emission products, as certified by the EPA. Blasting or use of explosives will not be permitted without written

permission from the Contracting Officer, and then only during the designated times. Confine pile-driving operations to the period between 8 a.m. and 4 p.m., Monday through Friday, exclusive of holidays, unless otherwise specified.

3.16 MERCURY MATERIALS

Mercury is prohibited in the construction of this facility, unless specified otherwise, and with the exception of mercury vapor lamps and fluorescent lamps. Dumping of mercury-containing materials and devices such as mercury vapor lamps, fluorescent lamps, and mercury switches, in rubbish containers is prohibited. Remove without breaking, pack to prevent breakage, and transport out of the activity in an unbroken condition for disposal as directed. Immediately report to the Environmental Office and the Contracting Officer instances of breakage or mercury spillage. Clean mercury spill area to the satisfaction of the Contracting Officer.

Cleanup of a mercury spill shall not be recycled and shall be managed as a hazardous waste for disposal.

-- End of Section --

SECTION 01 57 19.01 20

SUPPLEMENTAL TEMPORARY ENVIRONMENTAL CONTROLS
06/10

PART 1 GENERAL

1.1 REGIONAL REQUIREMENTS

1.1.1 Mid-Atlantic

1.1.1.1 North Carolina

b. MCAS Cherry Point

(1) Removal of Waste from MCAS Cherry Point

Remove and dispose of rubbish and debris from Government property.

(a.) Provide 24-hour advance written notice to the Contracting Office of Contractor's intention to dispose of off base.

(b.) Disposal at sites or landfills not holding a valid state of North Carolina permit is specifically prohibited. The prohibition also applies to sites where a permit my have been applied for but not yet obtained.

(c.) Off-base disposal of construction debris outside the parameters of this paragraph at site without State permits and/or not in accordance with regulatory requirements will require the Contractor at his own expense to remove, transport and relocate the debris to a State approved site. The Contractor will also be required to pay any fines, penalties, or fees related to the illegal disposal of construction debris.

PART 2 PRODUCTS

Not Used.

PART 3 EXECUTION

Not Used.

-- End of Section --

THIS PAGE HAS BEEN INTENTIONALLY LEFT BLANK

SECTION 01 62 35

RECYCLED / RECOVERED MATERIALS

06/10

PART 1 GENERAL

1.1 REFERENCES

The publications listed below form a part of this specification to the extent referenced. The publications are referred to within the text by the basic designation only.

U.S. NATIONAL ARCHIVES AND RECORDS ADMINISTRATION (NARA)

40 CFR 247	Comprehensive Procurement Guideline for Products Containing Recovered Materials

1.2 OBJECTIVES

Government procurement policy is to acquire, in a cost effective manner, items containing the highest percentage of recycled and recovered materials practicable consistent with maintaining a satisfactory level of competition without adversely affecting performance requirements or exposing suppliers' employees to undue hazards from the recovered materials. The Environmental Protection Agency (EPA) has designated certain items which must contain a specified percent range of recovered or recycled materials. EPA designated products specified in this contract comply with the stated policy and with the EPA guidelines. The Contractor shall make all reasonable efforts to use recycled and recovered materials in providing the EPA designated products and in otherwise utilizing recycled and recovered materials in the execution of the work.

1.3 EPA DESIGNATED ITEMS INCORPORATED IN THE WORK

Various sections of the specifications contain requirements for materials that have been designated by EPA as being products which are or can be made with recovered or recycled materials. These items, when incorporated into the work under this contract, shall contain at least the specified percentage of recycled or recovered materials unless adequate justification (non-availability) for non-use is provided. When a designated item is specified as an option to a non-designated item, the designated item requirements apply only if the designated item is used in the work.

1.4 EPA PROPOSED ITEMS INCORPORATED IN THE WORK

Products other than those designated by EPA are still being researched and are being considered for future Comprehensive Procurement Guideline (CPG) designation. It is recommended that these items, when incorporated in the work under this contract, contain the highest practicable percentage of recycled or recovered materials, provided specified requirements are also met.

1.5 EPA LISTED ITEMS USED IN CONDUCT OF THE WORK BUT NOT INCORPORATED IN THE WORK

There are many products listed in 40 CFR 247 which have been designated or

proposed by EPA to include recycled or recovered materials that may be used by the Contractor in performing the work but will not be incorporated into the work. These products include office products, temporary traffic control products, and pallets. It is recommended that these non-construction products, when used in the conduct of the work, contain the highest practicable percentage of recycled or recovered materials and that these products be recycled when no longer needed.

PART 2 PRODUCTS

Not Used.

PART 3 EXECUTION

Not Used.

-- End of Section --

SECTION 01 74 19.05 20

CONSTRUCTION AND DEMOLITION WASTE MANAGEMENT FOR DESIGN-BUILD
11/07

PART 1 GENERAL

1.1 GOVERNMENT POLICY

Government policy is to apply sound environmental principles in the design, construction and use of facilities. As part of the implementation of that policy the Contractor shall: (1) practice efficient waste management when sizing, cutting, and installing products and materials and (2) use all reasonable means to divert construction and demolition waste from landfills and incinerators and to facilitate their recycling or reuse.

1.2 PLAN

A waste management plan shall be submitted within 15 days after notice to proceed and prior to initiating any site preparation work. The plan shall include the following:

a. Name of individuals on the Contractor's staff responsible for waste prevention and management.

b. Actions that will be taken to reduce solid waste generation.

c. Description of the specific approaches to be used in recycling/reuse of the various materials generated, including the areas and equipment to be used for processing, sorting, and temporary storage of wastes.

d. Characterization, including estimated types and quantities, of the waste to be generated.

e. Name of landfill and/or incinerator to be used and the estimated costs for use, assuming that there would be no salvage or recycling on the project.

f. Identification of local and regional reuse programs, including non-profit organizations such as schools, local housing agencies, and organizations that accept used materials such as materials exchange networks and Habitat for Humanity.

g. List of specific waste materials that will be salvaged for resale, salvaged and reused, or recycled. Recycling facilities that will be used shall be identified.

h. Identification of materials that cannot be recycled/reused with an explanation or justification.

i. Anticipated net cost savings determined by subtracting Contractor program management costs and the cost of disposal from the revenue generated by sale of the materials and the incineration and/or landfill cost avoidance.

1.3 RECORDS

Records shall be maintained to document the quantity of waste generated; the quantity of waste diverted through sale, reuse, or recycling; and the quantity of waste disposed by landfill or incineration. The records shall be made available to the Contracting Officer during construction, and a copy of the records shall be delivered to the Contracting Officer upon completion of the construction.

1.4 DISPOSAL

Except as otherwise specified in other sections of the specifications, disposal shall be in accordance with the following:

1.4.1 Reuse.

First consideration shall be given to salvage for reuse since little or no re-processing is necessary for this method, and less pollution is created when items are reused in their original form. Sale or donation of waste suitable for reuse shall be considered. Salvaged materials, other than those specified in other sections to be salvaged and reinstalled, shall not be used in this project.

1.4.2 Recycle.

Waste materials not suitable for reuse, but having value as being recyclable, shall be made available for recycling whenever economically feasible.

1.4.3 Waste.

Materials with no practical use or economic benefit shall be disposed at a landfill or incinerator.

PART 2 PRODUCTS

Not used.

PART 3 EXECUTION

Not used.

-- End of Section --

SECTION 01 78 24.05 20

FACILITY OPERATION AND MAINTENANCE SUPPORT INFORMATION
11/07

PART 1 GENERAL

1.1 GENERAL REQUIREMENTS

This section provides the requirements for operation and maintenance support information (OMSI). OMSI contains detailed as-built information describing the efficient, economical and safe operation and maintenance, and repair of the facility. OMSI is provided as hard copy, manuals, .pdf files, and computerized maintenance management system (CMMS) data. The OMSI is to be factual, concise, comprehensive and written to be easily used by maintenance personnel. Descriptive matter and theory must include technical details that are essential for a comprehensive understanding of the operation, maintenance and repair of the system. The OMSI preparer shall ensure that OMSI reflect changes to systems and equipment, made during construction. The words "system", "systems", and "equipment", when used in this document refer to as-built systems and equipment.

1.1.1 Organization of OMSI

Prepare the OMSI in three parts. PART I - Facility Information, PART II - Primary Systems Information, and PART III - Product Data. Cross-referencing within or between OMSI Parts must be specific.

1.1.2 Sources of Data

The sources of data needed to prepare the OMSI include but are not limited to, the design plans and specifications, field visits, approved construction submittals and manufacturer's catalog data for materials, methods, and systems used in this contract.

1.1.3 OMSI Units of Measure

Provide OMSI utilizing the units of measure required by the RFP, Refer to UFGS Section 01 33 10.05 20 DESIGN SUBMITTAL PROCEDURES. Metric OMSI shall be in SI (System International) metric units exclusively.

1.1.4 Schedule of Operation and Maintenance Data Packages

Refer to UFGS Section 01 78 23 OPERATION AND MAINTENANCE DATA, located at the website location: http://www.wbdg.org/ccb for descriptions of SD-10, Operation and Maintenance Data packages, when referenced in Part 5, PRESCRIPTIVE SPECIFICATIONS, or in other UFGS sections. Submit Operation and Maintenance Manuals in accordance with this section, Section 01 78 24.05 20 FACILITY OPERATION AND MAINTENANCE SUPPORT INFORMATION. When using UFGS Sections that reference Section 01 78 23 OPERATION AND MAINTENANCE DATA, change reference to Section 01 78 24.05 20 FACILITY OPERATION AND MAINTENANCE SUPPORT INFORMATION.

1.2 SUBMITTALS

The use of a "G" following a submittal indicates that a Government approval action is required. Submit the following in accordance with Section 01 33 10.05 20 DESIGN SUBMITTAL PROCEDURES and Section 01 33 00.05 20

CONSTRUCTION SUBMITTAL PROCEDURES.

SD-06 Test Reports

Validation Site Visit and Presentation; G

SD-11 Closeout Submittals

OMSI, Preliminary Submittal; G

OMSI, 100% - Prefinal Submittal; G

OMSI, Final Submittal; G

1.3 SUBMITTAL FORMAT

1.3.1 Hard Copies

Bind the OMSI in durable, hard cover, three-ring, water and grease resistant binders, which hold 8.5" X 11" sheets. Binders shall have clear pockets located on the front and on the spine that hold printed sheets. Parts I, II, and III are separate binders with white, blue, and red spine inserts (respectively). Use high quality paper and dividers of heavy-duty paper with plastic reinforced holes and integrated tabs. Tabs must be of varying size and color to distinguish organization. Use plain tabs to show the UNIFORMAT II number and title in Part III, Product Data. Provide a Master Table of Contents for each OMSI binder. Identify each binder on both the cover insert sheet and the spine insert sheet with the following information:

1. OMSI Part I, II or III with appropriate titles
2. Building Number
3. Project Title
4. Activity and Location
5. Construction Contract Number
6. Prepared For: (Contracting Agency)
7. Prepared By
8. Volume Number - Each binder is a single volume. Number each volume consecutively.

1.3.2 Electronic Format (PDF)

Provide the OMSI on Compact Disk using Adobe Acrobat 7.0 or similar software capable of producing PDF (Portable Document Format) files. The PDF file is duplicate of the hard copy format. The PDF files shall be indexed by part (Facility Information, Primary Systems Information, and Product Data) and each entry identified in the table of contents.

1.3.3 Computerized Maintenance Management System (CMMS) Data

Provide data in format that can be imported into Single Platform Maximo CMMS.

1.4 SUBMITTAL REQUIREMENTS

1.4.1 Preliminary Submittal

Submit the Preliminary submittal when construction is 50% complete. Provide two hard copies to the Contracting Officer. Present the submittal

in sufficient detail to evaluate the data collection and arrangement process. One of these copies, reviewed by the Contracting Officer, with review comments, will be returned to the Contractor for preparation of the 100% submittal. Include in the submittal, as a minimum, all available Part I, Facility Information; all systems of Part II, Primary Systems Information (at least one system shall be essentially complete and the remaining systems shall be at least 50% complete); and at least two divisions of Part III, Product Data.

1.4.2 100% - Prefinal Submittal

Provide two hard copies to the Contracting Officer. The 100% - Prefinal submittal is due 30 days prior to Beneficial Occupancy Date (BOD). This submittal shall be a complete, working document that can be used to operate and maintain the facility.

1.4.3 Final Submittal

Provide two hard copies and two sets of electronically formatted information to the Contracting Officer 30 days prior to the Beneficial Occupancy Date (BOD). The final submittal is due 90 days after BOD. Include the final submittal in the Construction Schedule.

PART 2 PRODUCTS

2.1 DESCRIPTION OF WORK

2.1.1 OMSI Part I - Facility Information

a. General Facility and System Description - Describe the function of the facility. Detail the overall dimensions of the facility, number of floors, foundation type, expected number of occupants, and facility Category Code. List and generally describe all the facility systems listed in Part II, Primary Systems Information and any special building features (for example, HVAC Controls, Sprinkler Systems, cranes, elevators, and generators). Include photographs marked up and labeled to show key operating components and the overall facility appearance. Include a copy of the final "Completion Certification" which certifies completion and compliance of construction by the Contractor. This documentation will be provided by the Construction Quality Control Manager.

b. Basis of Design - Include the Basis of Design that shows the basic design scope of work, assumptions and the original intentions of the design A/E. Include a copy of the final "Design Quality Control Report Certification" which verifies conformance of the project design to the Request for Proposal. The Commissioning Authority or the Designer of Record will provide this documentation.

c. Safety Hazards - List all residual hazards identified in the Requirements Hazard Analysis as prepared by the design A/E. Provide recommended safeguards for each identified hazard.

d. Floor Plans - Provide uncluttered, legible 11" x 17" floor plans. Include only room numbers, type or function of spaces, and overall facility dimensions on the floor plans. Do not include construction instructions, references, frame numbers, etc.

e. Utility Connection and Cutoff Plans - Provide utility site plans and floor plans that indicate the main interior and exterior connection and

cutoff points for all utilities. Include enough information to enable someone unfamiliar with the facility to locate the connection and cutoff points. Indicate the room number, panel number, circuit breaker, valve number, etc., of each connection and cutoff point, and what that connection and cutoff point controls. These plans are in addition to Floor plans.

f. Equipment Warranty Tags and Guarantor's Local Representative - Provide with each warranty the name, address, and telephone number of the guarantor's representative nearest to the location where the equipment and appliances are installed. The guarantor's representative, upon request of the station representative, shall honor the warranty during the warranty period, and shall provide the services prescribed by the terms of the warranty. At the time of installation, tag each item of warranted equipment with a durable, oil- and water-resistant tag approved by the Contracting Officer. Attach tag with copper wire and spray with a clear silicone waterproof coating. Leave the date of acceptance and QC's signature blank until project is accepted for beneficial occupancy. Tag shall show the following information:

EQUIPMENT/PRODUCT WARRANTY TAG

Type of Equipment/Product _____
Warranty Period _____ From _____ To _____
Contract No. _____
Inspector's Signature _____ Date Accepted _____

Contractor:
Name: _____
Address: _____
Telephone: _____

Warranty Contact: _____
Name: _____
Address: _____
Telephone: _____

STATION PERSONNEL TO PERFORM ONLY OPERATIONAL MAINTENANCE

g. Extended Warranty Information - List and include copies of all warranties for products, equipment, components, and subcomponents whose duration exceeds one year. Cross-reference the list to the warranty copies included in Part III, Product Data. For each warranty listed indicate the applicable specification section, duration, start date, end date, and the point of contact for warranty fulfillment. Also, list or reference all specific operation and maintenance procedures that must be performed to keep the warranty valid.

h. Equipment and Warranty Tags Listing - Provide a table that lists the major equipment shown on the design equipment schedules and written warranties for equipment/products provided. Show the item descriptions, warranty information, locations, model numbers; and the names, addresses, and telephone numbers of the manufacturers, suppliers, contractor and subcontractors.

i. HVAC Filters - Provide a table that lists the quantity, type, size, and location of each HVAC filter.

j. Floor Coverings, Wall Surfaces, Ceiling Surfaces - Provide a table that lists by room number (including hallways and common spaces), the type, and

area of finish. The table will include a facility summary of the total area for each type of space and floor, wall, or ceiling finish.

k. Windows - Provide a table that lists by room number (including hallways and common spaces), the type of window, window size, number of each size and type, and special features. The table will include a facility summary of the total number for each type and size of window.

l. Light Fixtures - Provide a table that lists by room number (including hallways and common spaces), type of light fixture, number of light fixtures, type of bulbs or tubes, and number of bulbs or tubes. The table will include a facility summary of the total number of fixtures of each type and number of bulbs or tubes of each type.

m. Plumbing Fixtures - Provide a table that lists by room number, the number and type of plumbing and bathroom plumbing fixtures (for example, sinks, toilets, urinals, showers and drinking fountains).

n. Roofing - Provide the total area of each type of roof surface and system. Provide the name of the roofing product and system; manufacturer's, supplier's, and installer's names, addresses, and phone numbers. For each type of roof, provide a recommended inspection, maintenance and repair schedule that details checkpoints, frequencies, and prohibited practices. List roof structural load limits.

2.1.2 Part II - Primary Systems Information

OMSI Part II, Primary Systems Information requires using a systems approach. This approach requires that consideration be given to the entire system (that is, the interfaces of equipment, connections and material flow within the system). Use Notes, Cautions and Warnings throughout the Part II, Primary Systems Information to emphasize important and critical instructions and procedures.

OMSI Part II, Primary Systems Information are required for the primary systems listed below;

1. Domestic water pressure boosting system

2. Plumbing systems, including temperature actuated thermostatic water mixing valve

3. HVAC systems, including chillers, boilers, heat pumps, air handling equipment, exhaust fans, fan coil units, VAV boxes, heart recovery wheels, hot and chilled water hydronic systems, control valves, and backflow preventers.

4. Direct Digital Controls/Space Temperature Controls

5. Steam condensate Pumps, Steam PRV valves.

6. Electrical systems, including transformers, diesel electric generator sets, automatic transfer switches, primary switchgear, secondary switchgear, high voltage switches, variable frequency drives, and frequency converters

7. Fire protection systems, and fire alarm and detection systems

8. Site mechanical utilities, including cathodic protection

9. Site electrical utilities, including substations, transformers, and pad mounted switchgear

10. Wastewater pumping stations.

For each system, address;

a. Operation

(1) System Description - Provide a detailed discussion of the system composition and operation. Include technical details that are essential for an understanding of the system.

(2) Start-Up and Shutdown Procedures - Provide step by step instructions to bring systems from static to operational configurations and from operating to shutdown status.

(3) Normal and Emergency Operating Instructions - Provide a discussion of the normal and emergency operation and control of the system. Address operating norms (for example, temperatures, pressures, and flow rates) expected at each zone or phase of the system. Supplement the discussion with control and wiring diagrams and data. Include shutdown instruction for fires, explosions, spill, or other contingencies.

(4) System Flow Diagrams - Provide a flow diagram indicating system liquid, air or gas flow during normal operations. Integrate all system components into the diagram. A compilation of non-integrated, flow diagrams for the individual system components are not acceptable.

(5) Diagrammatic Plans - Provide floor plans indicating the location of equipment and configuration of the system installation. Include the configuration of associated piping or wiring. Subordinate structural features to utility features.

(6) Field Test Reports - Provide Field Test Reports (SD-06) that apply to equipment associated with the system.

(7) Operator Servicing Requirements - Provide instructions for services to be performed by the operator such as lubrication, adjustments, and inspection.

(8) Valve List - Provide a list of all valves associated with the system. Show valve type, identification number, function, location and normal operating position.

b. Preventive Maintenance- Preventive Maintenance Procedures, and Schedules - Provide Task Card for each individual maintenance task identified on the PM plan and Schedule. Include detailed PM procedures, safety instructions and precautions including lock out/tag out precautions, required skill level, number of personnel needed, frequency, special tools needed, parts needed, and estimated time required to complete the task. Include lubrication schedules indicating types, grades and capacities.

c. Troubleshooting Guides and Diagnostic Techniques - Provide step-by-step procedures for isolating the cause of system malfunctions.

The procedures shall clearly state indications or symptoms of trouble; the sequential instructions, including checks and tests to be performed and conditions to be sought, to determine the cause; and remedial measures to bring the equipment and system to operating condition. Identify special test equipment required to perform the procedures. Start the troubleshooting guide at the system level and proceed to a level where detailed manufacturer's troubleshooting procedures for equipment and components can be referenced. Provide clear references to repair procedures included in Part III, Product Data.

2.1.3 PART III - Construction Submittals

This portion of the OMSI manual provides a record of the as-built products, materials, and equipment used in Part 4, PERFORMANCE TECHNICAL SPECIFICATIONS, and Part 5, PRESCRIPTIVE SPECIFICATIONS, of the Request for Proposal (RFP). This submittal includes a complete copy of the approved construction submittal used in the facility construction. Include, as a minimum, O&M Data, Materials, Equipment, Data Sheets, Test Reports, Warranties, Certificates, and Shop Drawings.

PART 3 EXECUTION

3.1 VALIDATION and PRESENTATION

Provide a validation presentation of the OMSI Prefinal submittal to the users and field verify the OMSI's completeness and accuracy. Perform the validation site visit at the 100% - Prefinal OMSI submittal stage. Contact the Contracting Officer for the exact date.

The Commissioning Authority (CA) shall attend and provide a certifying statement that validation site visit and presentation is complete.

-- End of Section --

THIS PAGE HAS BEEN INTENTIONALLY LEFT BLANK

SECTION 01 78 30.00 22

DIGITAL DATA DELIVERABLES (GIS)

06/10

PART 1 GENERAL

1.1 OBJECTIVE

The primary objective of this section is to provide detailed specifications for Geographic Information System (GIS), Global Positioning System (GPS), and for CAD Computer-aided design (CAD) deliverables as part of this contracted effort. This will ensure that all data collected and/or updated will be useable in MCAS Cherry Point's Installation Geospatial Information and Services (IGI&S) repository. Any maps, drawings, figures, sketches, geospatial data, spreadsheets, or text files prepared for this contract shall be provided in both hard copy and digital form. The hard copy deliverables are defined in another paragraph of this section. Please see paragraph "EXAMPLES OF GEOSPATIAL DATA CONTENT AND STRUCTURE BY PROJECT TYPE" for recommended data content and structure based on specific project types.

1.1.1 Point of Contact for MCAS Cherry Point

The Point of Contact (POC) for assistance in preparation of GIS deliverables is:

MCAS Cherry Point Facilities Systems Service Office
GIS Section
chpt.facssoomb@usmc.mil

1.2 SUBMITTALS

Government approval is required for submittals with a "G" designation; submittals not having a "G" designation are for Contractor Quality Control approval. Submit the following in accordance with Section 01 33 00.05 20 CONSTRUCTION SUBMITTAL PROCEDURES:

SD-11 Closeout Submittals

GIS data deliverables; G

1.3 SPECIFIC TASKS

Provide geospatial data and documents for all features added, demolished or modified as a part of this project.

1.3.1 Geospatial Data Content and Structure

1.3.1.1 GIS Data Sets

Provide the content or specific data being collected/updated as deliverables (submittals).

a. New GIS Feature class: When developing/delivering a new feature class, the Contractor shall develop the initial structure consistent with the most current version of the GEOFidelis Data Model. This model is based

on the Spatial Data Standards for Facilities, Infrastructure and Environment (SDSFIE), also known as the National Committee for Information Technology Standards 353. The SDSFIE shall be followed for geospatial database table structure, nomenclature, attributes, domains and symbology. The Contractor shall then consult with the Contracting Officer concerning modifications or additions to the SDSFIE required by the specific business use to which the data will be applied. Failure for non-compliance of the specifications outlined in this document will result in non-acceptance of data deliverables.

Copies of the GEOFidelis Data Model may be obtained from the GEOFidelis web portal via the Contracting Officer.

Copies of the SDSFIE may be obtained from the Solutions and Technology for the Advancement and Refinement of SDSFIE (STARS) Team Internet homepage at http://www.sdsfie.org/ or by contacting:

Marc Beckel
Deputy Program Manager, SDSFIE
Northrop Grumman IT, TASC
Marc.beckel@ngc.com

b. Updating Existing GIS Feature Classes: When delivering updates to existing feature classes, the Contractor shall first obtain a copy of the subject data in a file geodatabase or personal geodatabase from the IGI&S Office via the Contracting Officer. The geodatabase shall be used as a template for all subsequent data collection processes. As MCAS Cherry Point has modified the SDSFIE structure for many feature classes to accommodate operational needs, the SDSFIE structure may not reflect the actual structure used in the geodatabase. If further modifications to structure are required as a result of this project, the Contractor will consult with the Contracting Officer for direction and final approval. Additionally, all utilities data shall be created within the specifications of spatial connectivity rules which indicate that vertex, edge and endpoints be snapped to features within the utility system. Also, all attribute domain configuration(s) shall consist of the accurate case and spelling for each domain.

-AND / OR (IF CADD IS BEING USED)-

1.3.1.2 CADD Drawings/Data

The Contractor shall develop all CADD data in conformance with the latest version of the following standards and policies:

U. S. National CAD Standards (NCS)

CAD/BIM Technology Center's AEC CADD Standards
(https://cadbim.usace.army.mil/default.aspx)

NAVFACINST 4250.1, Electronic Bid Solicitation

1.3.2 Geospatial Data Collection

1.3.2.1 Mapping grade Global Positioning System (GPS) data collection

Mapping grade Global Positioning System (GPS) data collection (sub-foot, sub-meter, and sub-5 meter) shall be provided and shall be completed in accordance with the "Statewide Global Positioning System (GPS) Data

Collection and Documentation Standards, Version 3" (or higher version if available at the time of this project) as prepared by the Statewide Mapping Advisory Committee and adopted by the North Carolina Geographic Coordinating Council in May 2006. Copies of these standards can be found on the Internet at: http://www.cgia.state.nc.us/gicc. Default horizontal accuracy for mapping grade GPS data collection efforts shall meet a sub-meter threshold unless otherwise specified to be survey grade, sub-foot or sub-5 meter. Only base stations included in the North Carolina Geodetic Survey Base Station Network shall be used for mapping grade GPS data collection. Spatial accuracy requirements are as follows:

- Sub foot: 95% of all points are within + 12 inches

-OR-

- Sub meter: 95% of points are within + 1 Meter

-OR-

- Sub 5 meter: 95% of points are within + 5 Meters

-AND / OR-

1.3.2.2 Survey grade GPS data collection

Survey grade GPS data collection shall be performed when specified. As survey processes are highly regulated by federal, state, and/or local technical and licensing requirements, they are in general beyond the scope of this document. However, survey grade GPS data collection shall at a minimum use the Geoid2003 CONUS epoch (or a more current epoch if available at the time of this project) and spatial accuracy requirements for survey grade are 95 % of GPS points are within + 1 centimeter. Every effort shall be made to capture feature locations without using offsets unless obstructions are present. Any offsets used shall be annotated in the "user flag" field.

NOTE: None of the GPS collection information is to be included in the table structure of the delivery, unless it is specifically part of the SDSFIE or established MCAS Cherry Point feature format.

1.3.2.3 Submittal Details

Submit GIS data deliverables for review and approval by the MCAS Cherry Point Public Works GIS section.

a. Text, Spreadsheet, and Database Files: The Marine Corps standard computing software is Microsoft Office 2003. Final Reports and other text documents shall be provided in Microsoft Word 2003 format AND Adobe Portable Document Format (PDF). Spreadsheet files shall be provided in Microsoft Excel format. Databases shall be provided in Microsoft Access format, unless specified otherwise, as approved by the Government. Prior to database development, the contractor shall provide the Government with a Technical Approach Document for approval, which describes the contractor's technical approach to designing and developing the database. All text, spreadsheet, and database files shall be delivered on a compact disk read-only memory (CD-ROM) or Digital Versatile Disc read-only memory (DVD-ROM) or other government approved media such as external hard drives.

b. Maps, Drawings, and Sketches (Digital Geospatial Data):

(1) Geospatial Data Software Format: Geographic data must be provided in a form that does not require translation, preprocessing, or post processing before being loaded to the MCAS Cherry Point enterprise geodatabase. The Contractor shall coordinate any deviations from this specification in writing with the Contracting Officer (who will coordinate with the Installation GI&S Manager as needed). Digital geographic maps and the related data sets shall be delivered in the following software format:

(a) GIS: File geodatabase (preferred) or a personal geodatabase format (Access database file) using ArcGIS 9.3 (or higher, if a higher version is approved by the government at the time of this project). The geodatabase must be importable to a SQL Server 2005 multi-user geodatabase using ArcSDE 9.3. The delivered data layer(s) shall be provided with x,y domain precision of 1000.

-AND / OR (IF CAD IS BEING INCLUDED)-

(b) CADD: All CADD data shall be provided in AutoCAD 2008 (or later version as approved by the Government), and shall be in the same projection and use the same coordinate system, datum, and units as stated below in the paragraph titled Geospatial Data Projection. Drawing files shall be full files, uncompressed, unzipped, and georeferenced.

(NOTE: ArcGIS and ArcSDE are Geographic Information System software produced by the Environmental Systems Research Institute (ESRI) of Redlands, California. AutoCAD is software produced by Autodesk, Inc. These software are used by MCAS Cherry Point's Geographic Information System.)

c. Geospatial Data Projection: Geographic data (regardless of format) shall be provided in Feet and projected into the NAD 1983 State Plane North Carolina FIPS 3200 Feet coordinate system. The maps and data shall use Lambert Conformal Conic Projection, the GRS 1980 spheroid and the North American Datum 1983. This projection requirement applies to all CADD drawings such as as-designed and as-built project plans, as well as GIS data layer deliverables. Each data set shall have a projection file if appropriate based on format. Map or drawing scales will be determined by the Contracting Officer, if applicable. Mapping accuracy for the agreed scales will conform to the American Society for Photogrammetry and Remote Sensing (ASPRS) "Accuracy Standards for Large-Scale Maps", "Interim Accuracy Standards for Large-Scale Maps", and "Geospatial Positioning Accuracy Standards". Copies of these standards can be obtained on the Internet at http://www.asprs.org , and/or at http://www.fgdc.gov or by contacting:

American Society for Photogrammetry and Remote Sensing
5410 Grosvenor Lane, Suite 210
Bethesda, MD 20814-2160

d. Media for Geospatial Data Deliverables: Geographic data shall be delivered on a separate compact disk read-only memory (CD-ROM) -or-, digital versatile disk read-only memory (DVD-ROM), or other digital media such as external hard drives if approved by the government. This media shall contain only the value-added data sets. Do not include the Contractor's working files or original MCAS Cherry Point data sets that

may have been used by the Contractor to develop the deliverables. "READ ME" files may be included on the geographic data media if such files provide explanation of the delivered data sets. However, these "READ ME" files should not be delivered in lieu of standard metadata.

e. Geographic Data Documentation (METADATA): For each digital file delivered containing geographic information (regardless of format), the Contractor shall provide documentation consistent with the Federal Geographic Data Committee (FGDC) Content Standards for Digital Geospatial Metadata (CSDGM). Both 'Mandatory' and 'Mandatory-if-Applicable' fields shall be completed for each geographic data set. The documentation shall include, but not be limited to, the following:

(1) Type of data layer (point, line, polygon, etc.),
(2) Field names of all attribute data and a description of each field name
(3) Definition of all codes used in the data fields
(4) Ranges of numeric fields and the meaning of these numeric ranges
(5) The creation date of the data layer and the name of the person who created it
(6) A point of contact shall be provided to answer technical questions.

Metadata generation tools included in the ArcGIS suite of software (or equivalent technology) shall be used in the production of the required metadata in XML format. If neither of these tools is used, the Contractor must insure that the metadata is delivered in a format that can be easily translated to the XML format. Copies of the FGDC metadata standard can be obtained on the Internet at http://www.fgdc.gov or by contacting:

FGDC Secretariat
c/o U.S. Geological Survey
590 National Center
Reston, Virginia 22092
(703) 648-5514

NOTE: The metadata should be formatted from the MCAS Cherry Point database perspective, not the Contractor project perspective. Therefore such items as Point of Contact should be the MCAS Cherry Point POC currently associated with the data and NOT the Contractor's Project Manager. The Contractor shall use language and format consistent with existing MCAS Cherry Point metadata.

f. Geographic Data Review:

(1) The digital geographic maps, GPS related data, and text documents shall be included for review in the draft and final contract submittals.

(2) For the Draft review of digital geospatial data deliverables, the Contractor may be required to provide a technical consultant to meet on-site at MCAS Cherry Point with the Contracting Officer, IGI&S Manager, and functional area subject matter experts to visually review the data deliverables on a Windows 2000/XP compatible system unless otherwise approved by the government.

(3) The data will be analyzed for discrepancies in subject content, correct format in accordance with these specifications, and compatibility with MCAS Cherry Point's IGI&S repository.

(4) The Contractor shall incorporate review comments to data and text prior to approval of the final submittal.

g. Ownership: All digital files, final hard-copy products, source data acquired for this project, and related materials, including that furnished by the Government, shall become the property of MCAS Cherry Point and will not be issued, distributed, or published by the Contractor.

1.4 EXAMPLES OF GEOSPATIAL DATA CONTENT AND STRUCTURE BY PROJECT TYPE

1.4.1 Infrastructure

Attribute data requirements for Infrastructure: The following attributes shall be collected for each infrastructure data class: Collect GPS data for all features listed with Sub-Foot accuracy.

1.4.1.1 Structures: CPT.structure_existing_area

GPS Structure and collect the following attributes:

a. Subtype ID: Structure, Canopy/Pavilion, Shed, Towers, Carport, etc (see domain table)
b. Building ID: Facility Number
c. Structure Status: Existing Structure, Portable, Etc.
d. Number of Levels
e. Structure Use 2: Populate "Residential" if structure is a residential unit
f. Material: Brick, Vinyl, etc.
g. Drawing Number
h. Drawing Type
i. Contract N
j. Date Acquired: Year
k. Source: Survey Grade GPS, Located in Field, Sub-Meter Grade GPS, Georeferenced Drawing, AutoCAD Drawing

1.4.1.2 Floor Outline: (Polyline) CPT.building.floor_outline (Polyline)

All new and renovated buildings will be required to have a "clean floor plan" for each floor level that will be delivered in GIS and AutoCAD format. Each level will represent one feature and provide the following: walls, doors, windows, closet, crawlspace, head facility, stairwells, etc.

Create feature and update the following attributes:

a. Building ID: Facility number
b. Floor Name
c. Subtype ID: Attic, Main Floor, Second Floor, Basement (Domain)
d. Drawing Number
e. Drawing Type
f. Contract Number
g. Data Source: Sub-Meter GPS, Survey Grade GPS, Georeferenced Drawing, AutoCAD Drawing

NOTE: Renovated floor plans will include total floor plan for each level. Each floor level shall be presented as one feature.

1.4.1.3 Slabs: CPT.slab_area

GPS and collect the following attributes:

a. Structure ID: (Facility Number, if applicable)
b. Feature Description: Include type of utility when applicable i.e., Generator, Pad Transformer, etc.
c. Structure Material
d. Structure Condition
e. Built Date
f. Drawing Number
g. Drawing Type
h. Contract Number
i. Data Source: Sub-Meter GPS, Survey Grade GPS,
j. Georeferenced Drawing, AutoCAD Drawing

1.4.2 Transportation

Attribute data requirements for Transportation: The following attributes shall be collected for each infrastructure data class: Collect GPS data for all features listed with Sub-Meter accuracy.

1.4.2.1 Road Centerline: CPT.road_centerline

GPS and collect the following attributes:

a. Category: Main, Secondary, Tertiary, etc.
b. Number of Lanes
c. Road Name
d. Paved: Paved/Unpaved
e. Date Acquired: Year
f. Surface Type: Asphalt, Gravel, Dirt, Etc.
g. Paved or Unpaved
h. Drawing Number
i. Drawing Type
j. Contract Number
k. Data Source: Sub-Meter GPS, Survey Grade GPS, Georeferenced Drawing, etc.
l. Use: Abandoned, Active, Unknown, etc.
m. Ramp: Yes/No

1.4.2.2 Road Area: CPT.road_area

GPS and collect the following attributes:

a. Category: Main, Secondary, Tertiary, etc.
b. Road Segment
c. Paved
d. Center Marks: Yes/No
e. Divided: Yes/No
f. Number of Lanes
g. Installation Date
h. Surface Type: Bitumen, Cement, etc.
i. Drawing Number
j. Drawing Type
k. Contract Number
l. Data Source: Sub-Meter GPS, Survey Grade GPS, Georeferenced Drawing, AutoCAD Drawing
m. Road_Name

n. Ramp: Yes/No

1.4.2.3 Curb line: CPT.curb_line

GPS and collect the following attributes:

a. Date Built
b. Curb Material
c. Description
d. Drawing Number
e. Drawing Type
f. Contract Number
g. Data Source: Sub-Meter GPS, Survey Grade GPS, Georeferenced Drawing, AutoCAD Drawing

1.4.2.4 Driveways: CPT.vehicle_driveway_area

GPS and collect the following attributes:

a. Driveway ID: Building that is associated with this feature
b. Paved or Unpaved: Yes/No
c. Surface Material
d. Installation Date
e. Lighting: Yes/No
f. Drawing Number
g. Drawing Type
h. Contract Number
i. Data Source: Sub-Meter GPS, Survey Grade GPS, Georeferenced Drawing, AutoCAD Drawing

1.4.2.5 Parking Lots: CPT.vehicle_parking_area

GPS and collect the following attributes:

a. Parking ID: Building that is associated with this feature
b. Paved or Unpaved: Yes/No
c. Total Spaces
d. Lighting: Yes/No
e. Installation Date
f. Drawing Number
g. Drawing Type
h. Contract Number
i. Data Source: Sub-Meter GPS, Survey Grade GPS, Georeferenced Drawing, AutoCAD Drawing
j. Feature_Description: Description of parking area
k. Surface_Type: Materials used to construct parking area.
l. Vehicle_Day: Average # of vehicles per day
m. Park_use: primary use of parking area: Hospital, Hunting, Office, Recreation, etc.
n. Feature Name: Name of parking area
o. Striping: Parking areas are striped or not.
p. Vehicle_Type: Type of vehicle in parking area: GOV, POV, Other, unknown, etc.

1.4.2.6 Bridge: CPT.road_bridge_area

GPS and collect the following attributes:

a. Bridge ID: Facility Number

b. Number of Lanes
c. Bridge Material Type
d. Bridge Type
e. Capacity:
f. Installation Date
g. Drawing Number
h. Drawing Type
i. Contract Number
j. Data Source: Sub-Meter GPS, Survey Grade GPS, Georeferenced Drawing, AutoCAD Drawing
k. Feature Name: common name for the bridge
l. Bridge_Status: Operational status of bridge

1.4.2.7 Pedestrian Sidewalks: CPT.pedestrian_sidewalk_area

GPS and collect the following attributes:

a. Material
b. Use: Residential, General Pedestrian, etc.
c. Installation Date
d. Status
e. Drawing Number
f. Drawing Type
g. Contract Number
h. Data Source: Sub-Meter GPS, Survey Grade GPS, Georeferenced Drawing, AutoCAD Drawing

1.4.3 Improvement

Attribute data requirements for Improvement: The following attributes shall be collected for each infrastructure data class: Collect GPS data for all features listed with Sub-Meter accuracy.

1.4.3.1 Fence: CPT.fence_line

GPS and collect the following attributes:

a. Subtype ID: Fence, Gate, Wall
b. Material: Chain Link, Wood, etc.
c. Containment Type: AST, Parking lot, Pumping Station, Pond, Well, etc.
d. Feature Height
e. Units of Measure
f. Drawing Number
g. Drawing Type
h. Contract Number
i. Data Source: Sub-Meter GPS, Survey Grade GPS, Georeferenced Drawing, AutoCAD Drawing
j. Length: Length of Fence, Gate, Wall

1.4.3.2 Gates: CPT.gate_line

GPS and collect the following attributes:

a. Subtype ID: Fence, Gate, Wall
b. Material: Chain Link, Wood, etc.
c. Containment Type: AST, Parking Lot, Pumping Station, Pond, Well, etc.
d. Feature Height
e. Units of Measure
f. Drawing Number

g. Drawing Type
h. Contract Number
i. Data Source: Sub-Meter GPS, Survey Grade GPS, Georeferenced Drawing, AutoCAD Drawing
j. Length: Length of Fence, Gate, Wall

1.4.3.3 Walls: CPT.wall_line

GPS and collect the following attributes:

a. Subtype ID: Fence, Gate, Wall
b. Material: Chain Link, Wood, etc
c. Containment Type: AST, Parking Lot, Pumping Station, Pond, Well, etc.
d. Feature Height
e. Units of Measure
f. Drawing Number
g. Drawing Type
h. Contract Number
i. Data Source: Sub-Meter GPS, Survey Grade GPS, Georeferenced Drawing, AutoCAD Drawing
j. Length: Length of fence, gate, wall

1.4.3.4 Recreation Trails: CPT.recreation_trail_centerline

GPS and collect the following attributes:

a. Subtype: Multi-Purpose, Riding, etc.
b. Trail Description: Paved, Unpaved, Dirt, etc.
c. Paved: Yes/No
d. Date Acquired: Year
e. Drawing Number
f. Drawing Type
g. Contract Number
h. Data Source: Sub-Meter GPS, Survey Grade GPS, Georeferenced Drawing, AutoCAD Drawing
i. Trail_id: Trail Identifier
j. Trail_Name: Name of Rec. Trail

1.4.3.5 Playground: CPT.playground_area

GPS and collect the following attributes:

a. Playground ID: Facility Number
b. Feature Description:
c. Drawing Number
d. Drawing Type
e. Contract Number
f. Data Source: Sub-Meter GPS, Survey Grade GPS, Georeferenced Drawing, AutoCAD Drawing

1.4.3.6 Swimming Pool: CPT.swimming_pool_area

GPS and collect the following attributes:

a. Swimming Pool ID: Facility Number
b. Feature Description: Recreation/Training
c. Drawing Number
d. Drawing Type
e. Contract Number

f. Data Source: Sub-Meter GPS, Survey Grade GPS, Georeferenced Drawing, AutoCAD Drawing

1.4.3.7 Athletic Court: CPT.athletic_court_area

GPS and collect the following attributes:

a. Court ID: Facility Number
b. Court Type: Tennis Court, Basketball Court, Baseball Field, Football Field, etc.
c. Court Name
d. Date Acquired
e. Drawing Type
f. Drawing Number
g. Contract Number
h. Data Source: Sub-Meter GPS, Survey Grade GPS, Georeferenced Drawing, AutoCAD Drawing
i. Court Desc: Misc. Info About Court

1.4.3.8 Athletic Field: CPT.athletic_field_area

GPS Structures and collect the following attributes:

a. Field ID: Facility Number
b. Field Description: Softball Field, Obstacle Training, PT Field, etc.
c. Date Acquired: Year
d. Field Type
e. Drawing Type
f. Contract Number
g. Drawing Number
h. Data Source: Sub-Meter GPS, Survey Grade GPS, Georeferenced Drawing, AutoCAD Drawing
i. Field Name

1.4.4 Environmental Storage Tanks

Attribute data requirements for Environmental Storage Tanks: The following attributes shall be collected for each infrastructure data class: Collect GPS data for all features listed with Sub-Meter accuracy.

1.4.4.1 Underground Storage Tanks: CPT.underground_storage_tank_point

GPS and collect the following attributes:

a. ENVUST-ID for Under Ground Storage Tank
b. Hazsite_ID
c. EH_Tank: Fuel Type
d. Facility Number
e. X Coordinates
f. Y Coordinates
g. Installation Date: Year
h. Drawing Number
i. Drawing Type
j. Contract Number
k. Data Source: Sub-Meter GPS, Survey Grade GPS, Georeferenced etc.
l. Product_D: Chemicals, Coal, Gas, Oil, Unknown, Other, etc.
m. Narrative
n. Serial Number
o. Tank_Sys_D: Subsystem the tank belongs: Fuel, Gas, Water, Wastewater,

etc.
p. Status: Abandoned, Closed, Inuse, etc.
q. Regulated: Yes/No
r. Volume
s. Volume_U_D: Unit of Measure for Volume

1.4.4.2 Aboveground Storage Tanks: CPT.aboveground_storage_tank_site

GPS and collect the following attributes:

a. ENVAST_ID for Above Ground Storage Tank
b. Hazsite_ID
c. EH_Tank: Fuel Type
d. Facility Number
e. X Coordinates
f. Y Coordinates
g. Installation Date: Year
h. Drawing Number
i. Drawing Type
j. Contract Number
k. Data Source: Sub-Meter GPS, Survey Grade GPS, Georeferenced etc.
l. Product_D: Chemicals, Coal, Gas, Oil, Unknown, other, etc.
m. Narrative
n. Serial Number
o. Tank_Sys_D: Subsystem the tank belongs: Fuel, Gas, water, wastewater, etc.
p. Status: Abandoned, Closed, In Use, etc.
q. Regulated: Yes/No
r. Volume
s. Volume_U_D: Unit of Measure for Volume

1.4.5 Other Features

Other Infrastructure Features:

All newly constructed features require GIS deliverables. If a particular utility is being installed and has been omitted from this specification, the feature shall be deliverable under these guidelines. At a minimum the following will be required;

a. Subtype Id
b. Facility ID
c. Installation Date
d. Type/Description
e. Material
f. Drawing Number
g. Contract Number
h. Data Source: Survey Grade GPS, Sub-Meter GPS, Georeferenced Drawing, AutoCAD Drawing

1.4.6 Utilities

Locate and Collect GPS data for each feature listed with survey grade accuracy.

1.4.6.1 Demolished Electrical Lines: CPT.demolished_cable_line

Existing attribute information will be copied into the demolished feature class: Please add the following attribute data once updated.

a. Date
b. Drawing Number
c. Drawing Type
d. Contract Number
e. Data Source: Existing GIS Data, Survey Grade GPS, Sub-Meter GPS, Georeferenced Drawing, AutoCAD Drawing

1.4.6.2 Electrical Lines: CPT.electrical_cable_line

Locate all Electrical Line data and collect the following attributes:

a. Subtype Identifier: Primary OH, Primary UG, Secondary OH, Secondary UG, Service OH, Service UG
b. Disposition: Permanent, Buried, Abandoned etc.
c. Subtype: Overhead/Underground
d. Date Acquired: Year
e. Conduit Size
f. Number of Phases
g. Insulation Material
h. Voltage
i. Size of Units
j. Substation ID
k. Circuit ID: RG1, RG2, AS1, ASL, FC1, FC2, MAL, etc.
l. Contract Number
m. Drawing Number
n. Secondary Voltage: i.e., 12470\7200, 480\277, 120\240, etc.
o. Data Source: Survey Grade GPS, Located in Field, Sub-Meter GPS, Georeferenced Drawing, AutoCAD, Drawing

1.4.6.3 Electrical Meter: CPT.electrical_meter_point

Locate, GPS and collect the following attributes:

a. Meter ID
b. Voltage
c. KW Rate
d. Number of Phases
e. Model Number
f. Date Acquired
g. Facility ID
h. Substation ID
i. Circuit ID: RG1, RG2, AS1, ASL, FC1, FC2, MAL, etc.
j. X Coordinates
k. Y Coordinates
l. Contract Number
m. Drawing Number
n. Data Source: Survey Grade GPS, Located in Field, Sub-Meter GPS, Georeferenced Drawing, AutoCAD Drawing

1.4.6.4 Electrical Transformer: CPT.elect_transformr_bank_point

Locate, GPS and collect the following attributes:

a. Subtype: Pole Mount, Pad Mount
b. Transformer Id
c. Date Installed
d. Primary Voltage
e. Secondary Voltage

f. Number of Transformers
g. Total KVA
h. Substation ID
i. Circuit ID: RG1, RG2, AS1, ASL, FC1, FC2, MAL, etc.
j. KVA Information
k. X Coordinates
l. Y Coordinates
m. Contract Number
n. Drawing Number
o. Data Source: Survey Grade GPS, Located in Field, Sub-Meter GPS, Georeferenced Drawing, AutoCAD Drawing

1.4.6.5 Electrical Poles: CPT.exterior_lighting_point

Locate, GPS and collect the following attributes:

a. Pole No
b. Date Acquired: Year
c. Condition
d. Type: pole, riser, down guy, etc.
e. Material
f. Pole Height
g. Units of Measure
h. Circuit ID (previously Feeder ID): RG1, RG2, AS1, ASL, FC1, FC2, MAL, etc.
i. X Coordinates
j. Y Coordinates
k. Contract Number
l. Drawing Number
m. Data Source: Survey Grade GPS, Located in Field, Sub-Meter GPS, Georeferenced Drawing, AutoCAD Drawing

1.4.6.6 Exterior Lighting: CPT.utility_pole_tower_point

Locate, GPS and collect the following attributes:

a. Light Type
b. X Coordinates
c. Y Coordinates
d. Sensor: Yes/No
e. Watts
f. Voltage
g. Circuit ID: RG1, RG2, AS1, ASL, FC1, FC2, MAL, etc.
h. Contract Number
i. Drawing Type
j. Drawing Number
k. Date Acquired: Year
l. Data Source: Survey Grade GPS, Located in Field, Sub-Meter GPS, Georeferenced Drawing, AutoCAD Drawing

1.4.6.7 Electrical Switch: CPT.electrical_switch_point

Locate, GPS and collect the following attributes:

a. Subtype ID: Circuit Breaker, Fuse Cutout, GOABS, Reclosures; Switch, Vacuum, Disconnect, Other
b. Switch ID: if applicable
c. Disposition
d. Installation Type: Pad Mounted, Pole Mounted, Cubicle, etc.

e. Switch Status: Open, Closed
f. Voltage
g. Circuit ID: RG1, RG2, AS1, ASL, FC1, FC2, MAL,etc.
h. X Coordinates
i. Y Coordinates
j. Contract Number
k. Drawing Number
l. Data Source: Survey Grade GPS, Located in Field, Sub-Meter GPS, Georeferenced Drawing, AutoCAD Drawing

1.4.6.8 Electrical Regulator: CPT.electrical_regulator_point

Locate, GPS and collect the following attributes:

a. Electrical Regulator ID: Facility Number
b. Disposition
c. Regulator Type
d. Regulator Use
e. Primary Volts
f. Secondary Volts
g. Number of Taps
h. KV Rate
i. Fuse Type
j. Manufacturer
k. Model Number
l. Circuit ID: RG1, RG2, AS1, ASL, FC1, FC2, MAL, etc.
m. X Coordinates
n. Y Coordinates
o. Contract Number
p. Drawing Number
q. Data Source: Survey Grade GPS, Located in Field, Sub-Meter GPS, Georeferenced Drawing, AutoCAD Drawing

1.4.6.9 Electrical Manholes: CPT.electrical_junction_point

Locate, GPS and collect the following attributes:

a. Subtype ID: Manhole, Junction Box, etc.
b. Manhole Number
c. Type: Handhole, Junction_Box, Manhole, Unknown, Other, etc.
d. Number of Cables
e. Rim Elevation
f. Units of Elevation
g. Diameter
h. Diameter Units
i. X Coordinates
j. Y Coordinates
k. Sub Station ID
l. Contract Number
m. Drawing Number
n. Data Source: Survey Grade GPS, Located in Field, Sub-Meter GPS, Georeferenced Drawing, AutoCAD Drawing

1.4.6.10 Electrical Generators: CPT.electrical_generator_point

Locate, GPS and collect the following attributes:

a. Generator ID
b. Disposition

c. Type
d. KVA
e. KW Rate
f. Voltage
g. Fuel Type
h. Manufacturer
i. Model
j. Serial Number
k. Circuit ID: RG1, RG2, AS1, ASL, FC1, FC2, MAL, etc.
l. X Coordinates
m. Y Coordinates
n. Facility ID
o. Contract Number
p. Drawing Number
q. Data Source: Survey Grade GPS, Sub-Meter GPS, Georeferenced Drawing, AutoCAD Drawing

1.4.7 STEAM DISTRIBUTION

Collect GPS data - survey grade

1.4.7.1 Boiler: CPT.heat_cool_boiler_site - If Required

Locate, GPS and collect the following attributes:

a. Date Acquired: Year
b. Disposition
c. Type
d. Capacity Heat
e. Capacity Units
f. Building ID: Facility Number where Boiler Resides
g. X Coordinates
h. Y Coordinates
i. Contract Number
j. Drawing Number
k. Data Source: Survey Grade GPS, Sub-Meter GPS, Georeferenced Drawing, AutoCAD Drawing

1.4.7.2 Fitting: CPT.heat_cool_fitting_point

Georeference fitting data and collect the following attributes:

a. Subtype ID: Anchor, Cap, Elbow, Expansion Joint, Tank
b. Date Acquired: Year
c. Fitting Type
d. Material
e. Size
f. Units
g. Line Diameter
h. Diameter in Units
i. Installation Date
j. X Coordinates
k. Y Coordinates
l. Contract Number
m. Drawing Number
n. Data Source: Survey Grade GPS, Located in Field, Sub-Meter GPS, Georeferenced Drawing, AutoCAD Drawing

1.4.7.3 Valves: CPT.heat_cool_valve_point

Locate, GPS and collect the following attributes:

a. Date Acquired
b. Valve Type
c. Valve Group/Class
d. Size
e. Size Units
f. Elevation
g. Elevation Units
h. Project ID
i. X Coordinates
j. Y Coordinates
k. Contract Number
l. Drawing Number
m. Data Source: Survey Grade GPS, Located in Field, Sub-Meter GPS, Georeferenced Drawing, AutoCAD Drawing

1.4.7.4 Manholes: CPT.heat_cool_junction_point

Locate, GPS and collect the following attributes:

a. Sub Type ID: Steam Pit, Valve Pit, Cooling Pit
b. Number of Valves
c. Number of Pipes
d. Width
e. Length
f. Diameter
g. Units for Measurements
h. Rim Elevations
i. Ground Elevation
j. Contract Number
k. Drawing Number
l. X Coordinates
m. Y Coordinates
n. Data Source: Survey Grade GPS, Sub-Meter GPS, Georeferenced Drawing, AutoCAD Drawing

1.4.7.5 Steam Line: CPT.heat_cool_line

Locate, GPS and collect the following attributes:

a. Subtype ID: Condensate, Steam
b. Date Acquired: Year
c. Disposition
d. Use Underground, Overhead, Abandoned
e. Material
f. Size
g. Length
h. Size Units
i. Ground Elevation
j. Invert Elevation
k. Units for Elevation
l. Taped: Yes/No
m. Building ID: If service line indicate Building
n. Insulation Material
o. Size of Insulation
p. Size Units

q. Contract Number
r. Drawing Number
s. Data Source: Survey Grade GPS, Located in Field, Sub-Meter GPS, Georeferenced Drawing, AutoCAD Drawing

1.4.7.6 Demolished Steam Line: CPT.demolished_heat_cool_line

Existing attribute information will be copied into the demolished feature class: Please add the following attribute data once updated.

a. Date
b. Drawing Number
c. Drawing Type
d. Contract Number
e. Data Source: Existing GIS Data, Survey Grade GPS, Sub-Meter GPS, Georeferenced Drawing, AutoCAD Drawing

1.4.8 STORM SEWER

Collect GPS data - survey grade.

1.4.8.1 Storm Sewer Lines: CPT.storm_sewer_line

Locate, GPS and collect the following attributes:

a. Date Acquired: Year
b. Use
c. Type
d. Material
e. Size
f. Diameters Units
g. Elevation
h. Elevation Units
i. Contract Number
j. Drawing Type
k. Drawing Number
l. Data Source: Survey Grade GPS, Located in Field, Sub-Meter GPS, Georeferenced Drawing, AutoCAD Drawing

1.4.8.2 Storm Sewer Drainage Line: CPT.storm_sewer_open drainage_line

Locate, GPS and collect the following attributes:

a. Date Acquired: Year
b. Type: Subtype Grass Swales, Armored Channels, Dirt, Other
c. Disposition
d. Contract Number
e. Drawing Type
f. Drawing Number
g. Date Source: Survey Grade GPS, Located in Field, Sub-Meter GPS, Georeferenced Drawing, AutoCAD Drawing

1.4.8.3 Manhole: CPT.storm_sewer_junction_point

Locate, GPS and collect the following attributes:

a. Subtype
b. Number of Pipes in
c. Number of Pipes out

d. X Coordinate
e. Y Coordinates
f. Contract Number
g. Drawing Type
h. Drawing Number
i. Date Source: Survey Grade GPS, Located in Field, Sub-Meter GPS, Georeferenced Drawing, AutoCAD Drawing

1.4.8.4 Inlet: CPT.storm_sewer_inlet_point

Locate, GPS and collect the following attributes: Contract shall verify SWPPP GPS inlet and add to this feature.

a. Subtype: Domain subtype to be "type" such as Catch Basin, Yard, Curb & Gutter
b. Date Acquired: Year
c. X Coordinates
d. Y Coordinates
e. Contract Number
f. Drawing Type
g. Drawing Number
h. Date Source: Survey Grade GPS, Located in Field, Sub-Meter GPS, Georeferenced Drawing, AutoCAD Drawing

1.4.8.5 Outfall: CPT.storm_outfall_point

Locate, GPS and collect the following attributes:

a. Subtype Domain: Industrial or Non-Industrial
b. Date Acquired: Year
c. Basin ID: Contractor shall utilize existing data and coordinate Basin_ID with data manager.
d. User_Flag: Data in current data has discharge location in the Narrative field, this data will be use to populate the User_ID field.
e. X Coordinates
f. Y Coordinates
g. Contract Number
h. Drawing Type
i. Drawing Number
j. Date Source: Survey Grade GPS, Located in Field, Sub-Meter GPS, Georeferenced Drawing, AutoCAD Drawing

1.4.8.6 Ponds, Basins, & Treatment Measures: CPT.storm_sewer_reservoir_areas

Locate, GPS and collect the following attributes:

a. Date Acquired: Year
b. Project ID:
c. Permit ID: SW8 XXXXXX
d. Size:
e. Facility ID:
f. Installation ID:
g. Drawing Type:
h. Drawing Number:
i. Outfall Location:
j. Date Source: Survey Grade GPS, Located in
k. Field, Sub-Meter GPS, Georeferenced Drawing, AutoCAD Drawing

1.4.9 Wastewater Collection

Collect GPS data - survey grade.

1.4.9.1 Wastewater Lines: CPT.wastewater_line

Locate, GPS and collect the following attributes:

a. Pipe ID: By Manhole Number
b. Date Acquired: Year
c. Use: Main Line, Force Main, Building/Facility Service, Abandoned/Inactive Pipe, etc.
d. Material
e. Size of Diameter
f. Units
g. Invert Elevation 1
h. Invert Elevation 2
i. Elevation Units
j. Slope
k. Slope Units: Percent
l. Building ID: If building/facility service line indicate Building number that the line services
m. Contract Number
n. Drawing Number
o. Data Source: Survey Grade GPS, Located in Field
p. Sub-meter GPS, Georeferenced Drawing, AutoCAD Drawing
q. Subtype: Abandoned, Main, overflow, Unknown, other, etc.

1.4.9.2 Demolished Lines: CPT.demolished_wastewater_line

Existing attribute information will be copied into the demolished feature class: Please add the following attribute data once updated.

a. Date
b. Drawing Number
c. Drawing Type
d. Contract Number
e. Data Source: Existing GIS Data, Survey Grade GPS, Sub-Meter GPS, Georeferenced Drawing, AutoCAD Drawing

1.4.9.3 Fitting: CPT.wastewater_fitting_point

Georeference Fitting data and collect the following attributes:

a. Subtype ID: Bend, Cap, Cleanout, Reducer, Tee, Wye, etc
b. Date Acquired: Year
c. Type
d. Material
e. Size of Diameter
f. Units
g. User Flag: Named Area
h. Contract Number
i. Drawing Number
j. X Coordinates
k. Y Coordinates
l. Data Source: Survey Grade GPS, Located in Field, Sub-Meter GPS, Georeferenced Drawing, AutoCAD Drawing

1.4.9.4 Valves: CPT.wastewater_valve_point

Locate, GPS and collect the following attributes:

a. Valves ID: Manhole Number associate with valve
b. Date Acquired: Year
c. Valve Style/Group: Gate, Check etc.
d. Valve Use
e. Size in Diameter
f. Units of Diameter
g. Valve Elevation
h. Units of Elevation
i. X Coordinates
j. Y Coordinates
k. Manhole ID
l. Contract Number
m. Drawing Number
n. Data Source: Survey Grade GPS, Located in Field, Sub-Meter GPS, Georeferenced Drawing, AutoCAD Drawing

1.4.9.5 Manholes: CPT.wastewater_junction_point

Locate, GPS and collect the following attributes:

a. Subtype ID: Manhole
b. Manhole ID: Each section of the base has a unique numbering system for manholes; please see Public Work, GIS office for details.
c. Use: Distribution Box, Junction Box, Manhole, Valve Box
d. Type
e. Material
f. Number of Pipes in manhole
g. Rim Elevation
h. Invert Elevation
i. Elevations Units
j. Manhole Diameter
k. Diameter Units
l. X Coordinates
m. Y Coordinates
n. Date Acquired: Year
o. Contract Number
p. Drawing Number
q. Data Source: Survey Grade GPS, Located in Field, Sub-Meter GPS, Georeferenced Drawing, AutoCAD Drawing

1.4.9.6 Vent: CPT.wastewater_vent_point

Locate, GPS and collect the following attributes:

a. Date Acquired: Year
b. Valve Style/Type: Pressure Relief, Regulating, etc.
c. Use: Control Valve, Flush Valve, etc.
d. Size in Diameters
e. Units in Diameters
f. X Coordinates
g. Y Coordinates
h. Subtype ID: Air Gap, Air Control, Air Release, Etc.
i. Containment Type
j. Contract Number
k. Drawing Number

l. Data Source: Survey Grade GPS, Located in Field, Sub-Meter GPS, Georeferenced Drawing, AutoCAD Drawing

1.4.9.7 Pump Stations: CPT.wastewater_pump_point

Locate, GPS and collect the following attributes:

a. Pump Station ID: Facility Number
b. Date Acquired: Year
c. Use: Air, Chemicals, Sanitation Sewage, etc.
d. Type: Submersible Turbine, Vertical Lift Centrifugal, etc.
e. Cooling Method
f. Rated Outflow Volume
g. Flow Unit Measure Code
h. X Coordinates
i. Y Coordinates
j. Number of Pumps
k. Contract Number
l. Drawing Number
m. Data Source: Survey Grade GPS, Located in Field, Sub-Meter GPS, Georeferenced Drawing, AutoCAD Drawing

1.4.9.8 Septic Tank: CPT.wastewater_septic_tank_point

Locate, GPS and collect the following attributes:

a. Date Acquired: Year
b. Disposition
c. Tank capacity
d. Contract Number
e. Drawing Number
f. Data Source: Survey Grade GPS, Located in Field, Sub-Meter GPS, Georeferenced Drawing, autoCAD Drawing

1.4.10 Oil Water Separators

Attribute data requirements for Oil Water Separators: The following attributes shall be collected for each infrastructure data class: Collect GPS data for all features listed with Sub-Meter accuracy.

1.4.10.1 Oil Water Separators: CPT.wstewat_oil_wat_separatr_point

Locate, GPS and collect the following attributes:

a. Oil Water Separator ID: Facility Number
b. Date Acquired: Year
c. Type
d. Separator Process
e. Separator Volume
f. Volume Units of Measure
g. Grit Chamber: Yes/No
h. Flow Capacity
i. Flow Units
j. X Coordinates
k. Y Coordinates
l. Contract Number
m. Drawing Number
n. Data Source: Survey Grade GPS, Located in Field, Sub-Meter GPS, Georeferenced Drawing, AutoCAD Drawing

1.4.10.2 Grease Trap: CPT.wastewater_grease_trap_point

Locate, GPS and collect the following attributes:

a. Trap Identification: Nearest Facility use Number
b. Type of Trap
c. Material
d. Capacity
e. Capacity Units
f. Manhole: Yes/No
g. Total Number of Laterals
h. Flow Rate
i. Flow Units
j. Building ID: Facility Number On Associated Building
k. X Coordinates
l. Y Coordinates
m. Contract Number
n. Drawing Number
o. Data Source: Survey Grade GPS, Located in Field, Sub-Meter GPS, Georeferenced Drawing AutoCAD Drawing

1.4.11 Water Distribution

Collect GPS data - survey grade

1.4.11.1 Water Lines: CPT.water_line

Locate, GPS and collect the following attributes:

a. Date Acquired: Year
b. Use of Line: Abandoned/Inactive Pipe, Fire Protection, Main Line, Raw Water Line, Building/Facility Service, Sprinkler Head
c. Disposition: Permanent, AIP, etc.
d. Material
e. Size
f. Size Units
g. Pipe Length
h. Unit for Length Dimension:
i. Taped: Yes/No
j. Source: Treatment Plant Facility Number or Water Tank Facility Number
k. All Invert Elevation information
l. Units of Measures
m. Contract Number
n. Drawing Type
o. Drawing Number
p. Data Source: Survey Grade GPS, Located in Field, Sub-Meter GPS, Georeferenced Drawing, AutoCAD Drawing
q. Subtype: abandoned, fire, main, sprinkler, unknown, other

1.4.11.2 Demolished Line: CPT.demolished_water_line

Existing attribute information will be copied into the demolished feature class: Please add the following attribute data once updated.

a. Date
b. Drawing Number
c. Drawing Type
d. Contract Number

e. Data Source: Existing GIS Data, Survey Grade GPS, Sub-Meter GPS, Georeferenced Drawing, AutoCAD Drawing

1.4.11.3 Water Meter: CPT.water_meter_point

Locate, GPS and collect the following attributes:

a. Meter ID
b. Date Acquired: Year
c. Type
d. Installation Type: Installed on a Service Line, Yes/No
e. Building ID: Facility Number - If attached to Building
f. X Coordinates
g. Y Coordinates
h. Contract Number
i. Drawing Type
j. Drawing Number
k. Data Source: Survey Grade GPS, Located in Field, Sub-Meter GPS, Georeferenced Drawing, AutoCAD Drawing

1.4.11.4 Water Tank: CPT.water_tank_point

Locate, GPS and collect the following attributes:

a. Tank ID: Facility Number
b. Date Acquired: Year
c. Disposition: Permanent, Abandoned In Place
d. Tank Use: Potable, Raw Water
e. Tank Status: Elevated, Ground
f. Tank Width
g. Tank Length
h. Tank Diameter
i. Ground Elevation
j. Units of Measure
k. Tank Volume
l. Unit of measure in Gallons
m. Top Elevation
n. Overflow Elevation
o. Pressure High
p. Pressure Low
q. Source: Water Plant Facility Number
r. X Coordinates
s. Y Coordinates
t. Contract Number
u. Drawing Type
v. Drawing Number
w. Data Source: Survey Grade GPS, Located in Field, Sub-Meter GPS, Georeferenced Drawing, AutoCAD Drawing

1.4.11.5 Water Valve: CPT.water_valve_point

Locate, GPS and collect the following attributes:

a. Date Acquired: Year
b. Disposition: AIP, In Use, etc.
c. Use: Valve
d. Valve Status: Gate, Air Release, Hydrant, Ball
e. Size
f. Size Units

g. Valve Elevation
h. Ground Elevation
i. Size Unit
j. Manhole ID
k. X Coordinates
l. Y Coordinates
m. Contract Number
n. Drawing Type
o. Drawing Number
p. Data Source: Survey Grade GPS, Located in Field, Sub-Meter GPS, Georeferenced, etc.
q. Subtype: backflow, check, gate, tap, unknown, etc.

1.4.11.6 Water Fitting: CPT.water_fitting_point

Georeference and collect the following attributes:

a. Date Acquired: Year
b. Disposition
c. Type: Tee, Cap, Bend etc.)
d. Material
e. Size
f. Size Units
g. Contract Number
h. Drawing Type
i. Drawing Number
j. Data Source: Survey Grade GPS, Located in Field, Sub-Meter GPS, Georeferenced Drawing, AutoCAD Drawing

1.4.11.7 Water Well: CPT.potable_water_well_point

Locate, GPS and collect the following attributes:

a. Well ID: Facility Number
b. Use: Potable
c. Well Status
d. Station ID: Building Number
e. Date Acquired: Year
f. Disposition
g. X Coordinates
h. Y Coordinates
i. Tank ID: Water Tank Facility Number
j. Contract Number
k. Drawing Type
l. Drawing Number
m. Data Source: Survey Grade GPS, Located in Field, Sub-Meter GPS, Georeferenced Drawing, AutoCAD Drawing

1.4.11.8 Water Manhole: CPT.water_junction_point

Locate, GPS and collect the following attributes:

a. Subtype
b. Use
c. Type
d. Material
e. Number Valves
f. Number Pipes
g. Installation Date

h. Size Diameter
i. Unit Diameter
j. X Coordinates
k. Y Coordinates
l. Contract Number
m. Drawing Type
n. Drawing Number
o. Data Source: Survey Grade GPS, Located in Field, Sub-Meter GPS, Georeferenced Drawing, AutoCAD Drawing

1.4.11.9 Fire Hydrant: CPT.water_fire_connection_point

Locate, GPS and collect the following attributes:

a. Hydrant ID: TBD by Fire Department
b. Date Acquired: Year
c. Disposition
d. Valve Connector Type
e. Valve Size:
f. Inlet Diameter
g. Units of measure
h. Water Source: Tank, Plant etc.
i. X Coordinates
j. Y Coordinates
k. Contract Number
l. Drawing Type
m. Drawing Number
n. Data Source: Survey Grade GPS, Located in Field, Sub-Meter GPS, Georeferenced Drawing, AutoCAD Drawing, etc.
o. Subtype: Faucet, Hydrant, Sprinkler, Unknown, Other, etc.

1.4.11.10 NON Potable Water Well: CPT.non-potable_water_well_point

Locate, GPS and collect the following attributes:

a. Well ID: Facility Number
b. Use:
c. Well Status
d. Station ID: Building Number
e. Date Acquired: Year
f. Disposition
g. X Coordinates
h. Y Coordinates
i. Tank ID: Water Tank Facility Number
j. Contract Number
k. Drawing Type
l. Drawing Number
m. Data Source: Survey Grade GPS, Located in Field, Sub-Meter GPS, Georeferenced Drawing, AutoCAD Drawing

1.4.11.11 Other Utility Features

All newly constructed features require GIS deliverables.

a. Facility ID
b. Installation Date
c. Type/Description
d. Material
e. Size

f. Drawing Number
g. Contract Number
h. Data Source: Survey Grade GPS, Sub-Meter GPS, Georeferenced Drawing, AutoCAD Drawing

PART 2 PRODUCTS

Not Used.

PART 3 EXECUTION

Not Used.

-- End of Section --

THIS PAGE HAS BEEN INTENTIONALLY LEFT BLANK

PART 3

PROJECT PROGRAM

THIS PAGE HAS BEEN INTENTIONALLY LEFT BLANK

PART THREE - PROJECT PROGRAM

Project Program

Bachelor Enlisted Quarters
P-136
FY2011
Category Code 721.24

MCAS Cherry Point
Havelock, NC

THIS PAGE HAS BEEN INTENTIONALLY LEFT BLANK

TABLE OF CONTENTS

COVER PAGE.....

TABLE OF CONTENTS.....

1. PROJECT DESCRIPTION.....

2. PROJECT OBJECTIVES.....
2.1. Mission Statement.....
2.2. Facility Function.....
2.3. Project Specific Priorities.....
2.4. Appropriate Design.....
2.5. Workflow Process.....
2.6. Special Design Challenges.....
2.7 Adaptability and Flexibility.....

3. SITE ANALYSIS.....
3.1 Existing Site Conditions.....
3.2 Site Development Requirements.....

4. BUILDING REQUIREMENTS.....
4.1 Space Tabulation.....
4.2 Space Relationships.....
4.3 Exterior Character.....

5. ROOM REQUIREMENTS.....

6. ENGINEERING SYSTEMS REQUIREMENTS.....
A10 Foundations.....
B10 Superstructure.....
B20 Exterior Closure.....
B30 Roofing.....
C10 Interior Construction.....
C20 Stairs.....
C30 Interior Finishes.....
D10 Conveying Systems.....
D20 Plumbing.....
D30 HVAC.....
D40 Fire Protection Systems.....
D50 Electrical Power and Lighting.....
E20 Furnishings.....
G10 Site Preparations.....
G20 Site Improvements.....
G30 Site Mechanical Utilities.....
G40 Site Electrical Utilities.....

Part 3 contains the project description, functional and performance requirements, scope items, and expected quality levels that exceed Part 4. Part 4 identifies design criteria, verification requirements, and performance and quality requirements of products. See "Order of Precedence" paragraph in Part 2 for relationships between all parts of this RFP.

THIS PAGE HAS BEEN INTENTIONALLY LEFT BLANK

THIS PAGE HAS BEEN INTENTIONALLY LEFT BLANK

1.0 PROJECT DESCRIPTION

This project is to construct two separate buildings for use as permanent-party military Bachelor Enlisted Quarters (BEQ) housing. Each building shall provide 114 Double-Occupancy Units while also providing two single-occupancy Handicap-Accessible Units located on the ground floor, along with the required support spaces as outlined in this Project Program. Individual BEQ buildings may be combined as described in chapter 4.2 “Space Relationships” of this RFP.

These BEQ buildings will be constructed at the MCAS Cherry Point, North Carolina location. The buildings and site design will conform to the surrounding architectural environment and comply with the Base Exterior Architectural Plan (BEAP) for MCAS Cherry Point. All bachelor housing complexes shall be designed and constructed to meet the requirements listed in the latest UFC 4-721-10 (DESIGN: NAVY AND MARINE CORPS BACHELOR HOUSING) as well as the 2006 International Building Code, the 2006 National Fire Protection Association Life Safety Code, and the Architectural Barriers Act Accessibility Standards (ABAAS). Contractor shall at a minimum review and comply with all applicable sections of the UFC in general, and CHAPTER 6 – MARINE CORPS 2+0 ROOM in particular, unless otherwise noted in the Request for Proposal (RFP).

In addition to the Double-Occupancy Units and two single-occupancy Handicap-Accessible Units (located on the first floor), each building shall include an Entrance Vestibule, Entrance Lobby, Interior Corridors, Barracks Manager’s Office / Duty Office Check-In, Duty Bunk Room with Duty Head, Multi-Purpose Room, Linen Storage Room, Laundry Room, one Female and one Male Public Head for visitors, Janitor Closets, Vending / Recycling Space, Elevators, Enclosed Stairs, and facility support spaces including Elevator Machine Room, Mechanical Room, Electrical Room, Telecommunications Room, and Fire Protection / Pump Room; to provide a complete and functional BEQ.

Each BEQ Double-Occupancy Unit shall include a double-occupancy living/sleeping area with a shared bathroom, including a toilet, two medicine cabinets, a vanity cabinet with countertop and lavatory, and shower compartment; and a service area including base and wall cabinets, countertops, sink, refrigerator, and microwave oven; and two lockable individual closets. Refer to Section 2 and Chapter 5, Room Requirements of this project program for additional details related to Handicap “Lite”-Accessible Units. Refer to attached room module layout sketch in part 6 “Attachments” of this RFP for room module layout.

The number of stories of the Bachelor Enlisted Quarters is not prescribed. However, each Bachelor Enlisted Quarters cannot exceed four stories.

All building materials, building systems, and construction methods shall follow the requirements established in the Engineering Systems Requirements (ESR) of the Project Program and the Performance Technical Specifications (PTS) of this RFP.

The BEQ buildings shall be constructed on reinforced concrete foundations with reinforced concrete slabs. Concrete foundations may require concrete piles, based on the result of the contractor’s geotechnical investigation. Exterior wall construction shall be Concrete Masonry Units (CMU), with the option of cast-in-place concrete walls, with masonry brick veneer. Interior wall construction shall be CMU. Construct a standing-seam metal roof system to match the adjacent buildings. Windows will be operable, allow for escape in an emergency, and windows and entrances will meet or exceed Antiterrorism Force Protection (ATFP) blast criteria. Pre-Engineered buildings with CMU and brick veneer exterior walls are prohibited. Interior Finishes shall be earth tones, non-institutional with a high-end residential appearance.

Electrical requirements include: area lighting, lighting along sidewalks, fire alarms, information systems including emergency mass-notification, energy-saving Electronic Monitoring and Control Systems (EMCS), telephone, Local Area Network (LAN), voice and data communication, and cable television (CATV). Provide conduit for Closed-Circuit Television system and wireless hardware.

Mechanical systems include plumbing, fire protection systems, fire pump with generator backup and Heating, Ventilating, and Air-Conditioning (HVAC).

Supporting facilities work includes site and building utility connections such as water, steam, sanitary and storm sewers, electrical, telephone, Local Area Network (LAN), and Cable Television (CATV).

Site improvements shall include equipment washdown and drying areas, lit full-size basketball and volleyball courts, lit full-size horseshoe pits, picnic shelter with gas or charcoal barbeque grills (if natural gas is available, use gas), fitness trail, pedestrian sidewalks, screened garbage disposal area, vehicle / fire access drives, paved Privately-Owned Vehicle (POV) parking with a solar photovoltaic (PV) electric system over the parking stalls as a bid option, photovoltaic-covered walkways as a bid option, earthwork, landscaping, and storm water management systems. Provide molded concrete paver pattern at building entrance and 600 square feet adjacent to the Multi-Purpose Room. Provide concrete benches, shade canopies, building signage, and road signage.

The Equipment Washdown Area shall be located adjacent to a building entry point. The area shall be concrete, eight feet in diameter, with a centrally-supported standpipe consisting of six shower heads with cut-off valves suitable for simultaneous operation of all six shower heads. Provide a properly-sized supply standpipe with a freeze-proof design and easily-accessible shut-off valve(s). The concrete area will be sloped to a central drain. All equipment will be suitable for outside service.

The Equipment Drying Area shall be an enclosed drying area on concrete hardstand adjacent to the Equipment Washdown Area. The drying area shall be totally-enclosed on all four sides and across the top with chain link fence fabric. Fence fabric shall be adequately-supported by fence posts and support members to withstand a hanging equipment load of up to 150 pounds per square foot from the top of the structure. The drying area shall be divided into three separate sections with one pedestrian gate per section. Each gate shall have a lockable hasp. Each of the three sections shall be 90” wide x 252” long x 118” high. The concrete hardstand will be adequately-sloped to prevent ponding water.

Existing training / physical fitness course will be relocated. Removal of existing steam manholes, existing steam lines, and existing foundations is required.

--End of Section--

2.0 PROJECT OBJECTIVES

2.1 Mission Statement

The Marine Corps mission for bachelor housing is to provide adequate barracks space and living amenities for all Marine and assigned Navy bachelor enlisted personnel. The goal is to achieve consistency throughout the Marine Corps with facilities that promote professional development, support unit cohesion, and improve the quality of life for all enlisted personnel.

2.2 Facility Function

The purpose of the new construction is to provide housing for permanent-party enlisted personnel. The intended grade mix is E1- E3. Each Double-Occupancy Unit shall support two occupants and function for living, sleeping, bathing, personal storage, and minimal food preparation. In addition to the units, the buildings shall provide laundry services for the residents, and community and recreational spaces in support of current quality-of-life requirements. These buildings shall assist in satisfying the housing deficiencies at Marine Corps Air Station (MCAS) Cherry Point, North Carolina. The Bachelor Enlisted Quarters shall provide a more residential living environment for single Marines. Below are elements which shall be provided for the optimal function of the facility:

- High-quality interior and exteriors throughout
- Sense of community through campus or community layout
- Residential-feel for each building
- Direct connection between a Community Building and the Main Building. Buildings may share the Multi-Purpose Room.
- High-quality common activity areas and building entries
- Attractive durable finishes
- Compatibility with the environment and sustainable design and construction
- Daylighting and lighting controls for flexibility
- Design each project site as a comprehensive complex, complete with high-quality usable outdoor spaces suitable for living and recreational purposes

2.3 Project Specific Priorities

The following items are of primary importance to both the government and the building users.

2.3.1 Sustainable Design

Integrate sustainable strategies and features into the design to minimize the energy consumption of the facilities; conserve resources; minimize adverse effects to the environment; and improve occupant productivity, health, and comfort, in order to reduce the total cost of ownership of the project using a whole-building, life-cycle approach. In accordance with Engineering and Construction Bulletin 2008-01 and other directives such as Unified Facilities Criteria 4-030-01 Sustainable Development, and Executive Order 13514, the facility and all site features shall be designed and constructed using USGBC LEED-NC. The design and construction shall incorporate sustainable design strategies and features to the fullest-extent possible, consistent with mission, budget, and client requirements.

Site stormwater management shall use Low-Impact Development principles and practices to the greatest-extent possible and shall rely on dry features for stormwater detention (infiltration basins, swales, and rain gardens). No wet ponds are allowed in this design.

The minimum sustainable design rating level for the project is to achieve LEED-NC Version 2.2 Silver rating, to consider Gold rating as an option, and to avoid the Platinum rating. The constructed facility shall be certified by the USGBC as having met the USGBC LEED-NC requirements for the required rating level. Provide a roof-mounted solar hot water system for each building. Provide air barriers and air barrier performance testing. Provide Light-Emitting Diode (LED) exterior and interior lighting.

Ensure sustainable strategies and features in the design phase are incorporated in the construction phase. Information and resources on sustainable design principles and guidelines are explained in the "Whole Building Design Guide" that can be found at www.wbdg.org.

2.3.2 Energy Conservation

Energy conservation shall be in accordance with UFC 3-400-01, Design Energy Conservation. The project shall be designed to have requirements better than ASHRAE 90.1-2007 and have energy consumption levels of at least 30% less than ASHRAE 90.1-2007 as required by UFC 3-400-01. It is preferred that the BEQs have energy consumption levels of at least 40% less than ASHRAE 90.1 2007. The Designer of Record (DOR) shall perform and submit an energy analysis in accordance with Appendix G of ASHRAE Standard 90.1 showing the calculated baseline building performance and the proposed building performance on an energy consumption basis to document compliance with the Act. For the ASHRAE analysis, energy for receptacle and process loads should not be included in the calculations for compliance. Laboratory hoods and kitchen hoods shall be considered non-process loads and are to be included in the 30% reduction requirements. If the 30% reduction level is not life-cycle cost-effective based on the analysis, the Designer of Record (DOR) shall use an iterative procedure to find the lowest level of energy consumption that is life-cycle cost-effective. To determine if a feature is “life-cycle cost-effective”, a Life-Cycle Cost Analysis (LCCA) shall be performed in accordance with 10 CFR 436 Subpart A. Any of four methods are acceptable to determine life-cycle cost (LCC): (Lower LCC, Positive net savings, Savings to Investment Ratio (SIR) greater than 1, or an adjusted rate of return greater than the discount rate).

The new BEQ facilities shall include all necessary energy conservation measures that will lead to the required energy consumption levels of 30% (or greater) below ASHRAE 90.1-2007. All relevant energy conservation measures shall be optimized as a group to ensure that overall energy consumption is reduced to the lowest level consistent with the LCCA. The energy conservation measures that are relevant shall be determined. All of the relevant measures and all calculations shall be captured in the Energy Compliance Analysis (see Section 2-4 in UFC 3-400-01).

The Contractor shall submit their proposed methodologies for meeting the energy saving requirements. Submission shall include a list of proposed methodologies showing the proposed percentage of energy savings for each feature leading to the cumulative total of 31.5% or greater for each facility. Some of the required energy measures for the facilities as identified in ESR Section D30 are:

- Provide a separate and dedicated outdoor air system with total enthalpy heat wheel for energy recovery. System shall be designed to provide 100% designed capacity in the event of a failure of the heat wheel.
- Provide heat energy recovery from chiller to domestic hot water system
- Provide building air tightness by reducing the air infiltration through the envelope to 0.25 CFM per floor square foot at 0.3 inches water gauge pressure. See D309090 for Building Air Tightness Requirements.
- Provide high-efficiency motors
- Provide Energy Star-labeled equipment
- Provide high-efficiency chillers and boilers
- Provide radiant barriers in the exterior wall system
- Provide radiant barriers on mechanical systems and equipment

The Contractor shall provide facilities that meet or are better than the Department of Energy's requirements for the Energy Star label for commercial buildings. Provide for a minimum target overall rating of 90. After one year of operation, the Contractor and his design agent shall accumulate the required energy usage data and submit applications and obtain the Energy Star label for each facility. The Contractor shall apply the label to each facility and register the facility as an Energy Star-labeled facility. Refer to Part 6, for a copy of the "2010 Licensed Professional's Guide to the Energy Star Label for Commercial Buildings". All equipment provided shall have the Energy Star label. The Contractor's design agent shall obtain an Energy Star-labeled design for each facility.

For facilities where natural gas and steam / pumped condensate utilities are available, and for sites which will facilitate geothermal HVAC, the Contractor shall perform life-cycle cost analyses to determine which utility has the lowest life-cycle cost. The utility with the lowest life-cycle cost shall be utilized in the project. Life-cycle cost shall include first cost, maintenance cost, energy cost, and replacement cost in accordance with the requirements of UFC 3-400-01 over a time period of forty years. The Contractor shall determine the approximate life-cycle costs for the analyses (building and site natural gas system back to the existing main).

2.3.3 Building Commissioning

Provide Enhanced Commissioning to meet the requirements of USGBC LEED Rating System Version 2.2, Unified Facilities Guide Specifications (UFGS) section 01 45 00.05 20, Design and Construction Quality Control, and 01 33 29, LEED Documentation. At a minimum, commission the following systems: HVAC systems and controls, daylighting and lighting controls, and if provided, refrigeration systems and controls, renewable energy systems, domestic hot water systems, and thermal comfort controls. See the following "Engineering System Requirements" sections in Chapter 6 of the Project Program to determine any additional systems to be commissioned.

The designated Commissioning Authority (CA) shall meet the qualifications of USGBC LEED Rating System Version 2.2 and Unified Facilities Guide Specifications (UFGS) section 01 45 00.05 20, Design and Construction Quality Control. The CA shall report results, recommendations, and findings directly to the Government.

2.3.4 Accessibility Requirements

In addition to the Architectural Barriers Act Accessibility Standards (ABAAS), provide barrier-free design in accordance with the requirements of the DEPSECDEF Memorandum "Access for People with Disabilities" dated October 31, 2008. The memorandum updates the Department of Defense standards for making facilities accessible to people with disabilities. The U.S. Access Board issued an update of the accessibility guidelines, which the DEPSECDEF Memorandum implements with unique military requirements specified in the memorandum attachment. The Architectural Barriers Act Accessibility Standards (ABAAS) and the DEPSECDEF Memorandum are located at http://www.access-board.gov/ada%2Daba/aba-standards-dod.cfm.

2.3.5 Antiterrorism Criteria

This facility shall have an occupancy designated as Billeting in accordance with UFC 4-010-01 DOD, MINIMUM ANTITERRORISM STANDARDS FOR BUILDINGS. UFC 4-010-01 is a multidiscipline UFC. Therefore all architectural / engineering disciplines must meet the Unified Facility Criteria requirements.

Civil Engineers: This Standard shall affect location of the building on the site, access roads, parking, landscaping, fences, gates, and security barriers.

Architects: This Standard shall affect the building envelope, especially the doors, windows, and detailing of building components.

Structural Engineers: All BEQ structures three stories or more in height shall be designed and constructed to resist progressive-collapse in strict accordance with UFC 4-010-01 and UFC 4-023-03. Use Occupancy Category II design requirement.

Mechanical Engineers: This Standard shall affect the locations of chillers, compressors, air distribution, louvers, and mechanical supports.

Electrical Engineers: This Standard shall affect the locations of substations, transformers, outside generators, equipment support, distribution, and mass notification.

The proposed site is located within a controlled perimeter.

Facility minimum standoff distance is 25 meters (82 feet) from parking and roadways.

Facility conventional construction standoff distance is 45 meters (148 feet) from controlled perimeter.

Develop the site to provide the standoff requirements listed in UFC 4-010-01.

2.3.6 Elevators in Multi-Story Buildings

Design and construct elevators for these facilities in accordance with all applicable criteria in 1.0 Project Description above, applicable industry standards cited in Engineering System Requirements and Performance Technical Specifications D10, and the following criteria, available from the internet at the site indicated:

- ITG 01-01 Interim Technical Guidance (ITG) “Elevator Design” at the following internet site: http://www.wbdg.org/ccb/NAVFAC/INTCRIT/fy01_01.pdf
- Unified Facilities Guide Specifications 14 24 00: Hydraulic Elevators
- Unified Facilities Guide Specifications 14 21 23: Electric Traction Passenger Elevators

2.4 Appropriate Design

It is important that the architecture of the buildings reflect the function of the facility as a Bachelor Enlisted Quarters (BEQ). The architecture shall be inviting to potential residents. The building form shall project a positive and professional appearance with identifiable main entrances into the buildings from the parking areas. Exterior materials such as brick, standing-seam metal roofing, and exterior metal finishes selected for these facilities shall compliment the surrounding buildings. The standing-seam metal roofing color shall be “Slate Gray”.

Comply with UFC 4-721-10 (NAVY AND MARINE CORPS BACHELOR HOUSING), Base Exterior Architectural Plan (BEAP) for Marine Corps Air Station Cherry Point, and Cherry Point architectural standards, for planning and design requirements for this project.

2.5 Workflow Process

2.5.1 Hours of Operation

Since the buildings will provide housing for permanent party enlisted personnel, hours of operation will be 24 hours a day, 7 days a week.

2.5.2 Staffing / Occupancy per BEQ

Type of Occupancy	No. of Persons	Description of Activity
Administration	3	Office Administration
Custodial	2	
Maintenance - Indoor	1	
Maintenance - Outdoor	2	
Residents	230	E1-E3 enlisted personnel

2.6 Special Design Challenges

As each building's construction nears completion, the Design-Build Contractor shall be prepared to coordinate with the activities of Government personnel and other contractors in order to facilitate occupancy and installation of equipment and systems under separate contract. The Government and other contractors will make every effort to coordinate work with the Design-Build Contractor. However, cooperation by the Design-Build Contractor is expected.

Provide steep-pitched roofs, having a minimum slope of 5:12. Integrate mechanical systems into above-ceiling and attic areas throughout, and provide open-grate steel mezzanines at all major air-handling units accessible by stairs for ease of maintenance. Provide gabled louvers in the roof design in order to permit outdoor intake to attic-mounted air handlers. Provide in-line exhaust fans that exhaust to the exterior via wall and gable-mounted louvers. Use of rooftop-mounted mechanical equipment and interior roof drains are strictly forbidden for use under this contract. All roofs shall drain to building perimeters and stormwater shall be collected and conveyed in eave-mounted gutters and downspouts. Provide standing-seam metal roofing having a Solar Reflectance Index (SRI) equal to, or greater than, 29.

Provide extended and enhanced warranties.

In addition to the acoustical requirements listed in 5.0 Room Requirements, comply with the following:

Exterior sound transmission control: Consistent with local land-use standards, Bachelor Enlisted Quarters located in noise-critical areas, such as proximity to highways, county roads, city streets, railroads, rapid transit lines, airports, or industrial areas shall be designed to prevent the intrusion of exterior noises beyond prescribed levels. Proper design shall include, but shall not be limited to, orientation of the Bachelor Enlisted Quarters structure, setbacks, shielding, and sound insulation of the building itself.

Allowable interior noise levels: Interior noise levels attributable to exterior sources shall not exceed 45 decibels in any habitable room. The noise metric shall be either the day-night average sound level (Ldn) or the community noise equivalent level (CNEL), consistent with the noise element of the local general plan.

Note: Ldn is the preferred metric for implementing these standards. Worst-case noise levels, either existing or future, shall be used as the basis for determining compliance with this section. Future noise levels shall be predicted for a period of at least ten years from the time of building permit application.

Airport noise sources: Bachelor Enlisted Quarters structures to be located where the annual Ldn or CNEL (as defined in Title 21, Subchapter 6, California Code of Regulations) exceeds sixty decibels shall require an acoustical analysis showing that the proposed design will achieve the prescribed allowable interior level. For public-use airports or heliports, the Ldn or CNEL shall be determined from the airport land-use plan prepared by the county wherein the airport is located. For military bases, the Ldn shall be determined from the facility Air Installation Compatible Use Zone (AICUZ) plan. For all other airports or heliports, or public-use airports or heliports for which a land-use plan has not been developed, the Ldn or CNEL shall be determined from the noise element of the general plan of the local jurisdiction. When aircraft noise is not the only significant source, noise levels from all sources shall be added to determine the composite site noise level.

Other noise sources: Bachelor Enlisted Quarters structures to be located where the Ldn or CNEL exceeds sixty decibels shall require an acoustical analysis showing that the proposed design will limit exterior noise to the prescribed allowable interior level. The noise element of the local general plan shall be used to the greatest extent possible to identify sites with noise levels potentially greater than sixty decibels.

Compliance: Evidence of compliance shall consist of submittal of an acoustical analysis report, prepared under the supervision of a person experienced in the field of acoustical engineering, with the application for a building permit. The report shall show topographical relationships of noise sources and Bachelor Enlisted Quarters sites, identification of noise sources and their characteristics, predicted noise spectra and levels at the exterior of the proposed Bachelor Enlisted Quarters structure considering present and future land usage, basis for the prediction (measured or obtained from published data), noise attenuation measures to be applied, and an analysis of the noise insulation effectiveness of the proposed construction showing that the prescribed interior noise level requirements are met. If interior allowable noise levels are met by requiring that windows be unopenable or closed, the design for the structure must also specify a ventilation system or air-conditioning system to provide a habitable interior environment. The ventilation system must not compromise the dwelling unit noise reduction.

Field testing: When inspection indicates that the construction is not in accordance with the approved design, or that the noise reduction is compromised due to sound leaks or flanking paths, field testing may be required. A test report showing compliance or noncompliance with prescribed interior allowable levels shall be submitted to the building official. Measurements of outdoor sound levels shall generally follow the guidelines in ASTM E 1014. Field measurements of the A-weighted airborne sound insulation of buildings from exterior sources shall generally follow the guidelines in ASTM E 966. For the purpose of this standard, sound level differences measured in unoccupied units shall be normalized to a receiving room reverberation time of one-half second. Sound level differences measured in occupied units shall not be normalized to a standard reverberation time.

2.7 Adaptability and Flexibility

To the greatest practical extent, provide the following:

- The buildings shall be organized to allow for future adaptability for the facility to serve as housing for other military ranks or temporary government civilian personnel. The facilities should be situated on the site to allow for future expansion with the addition of Double-Occupancy Units.
- Design the facility to maximize above-ceiling access and identification of above-ceiling systems for ease of service and maintenance, while maintaining secure ceilings in the BEQ sleeping rooms.
- Provide building materials and colors that are sustainable and include the full range of manufacturers' color offerings. Special attention shall be given to the Multi-Purpose Room in BEQs.
- Utilize technology as specified under this RFP, and prepare spaces to adapt to future technology. Particular attention shall be directed to convenient placement of pull boxes and vertical chase access for servicing, and future alteration of electrical and communication / data systems.

--End of Section--

3.0 SITE ANALYSIS

3.0.1 SITE ANALYSIS – VICINITY MAP

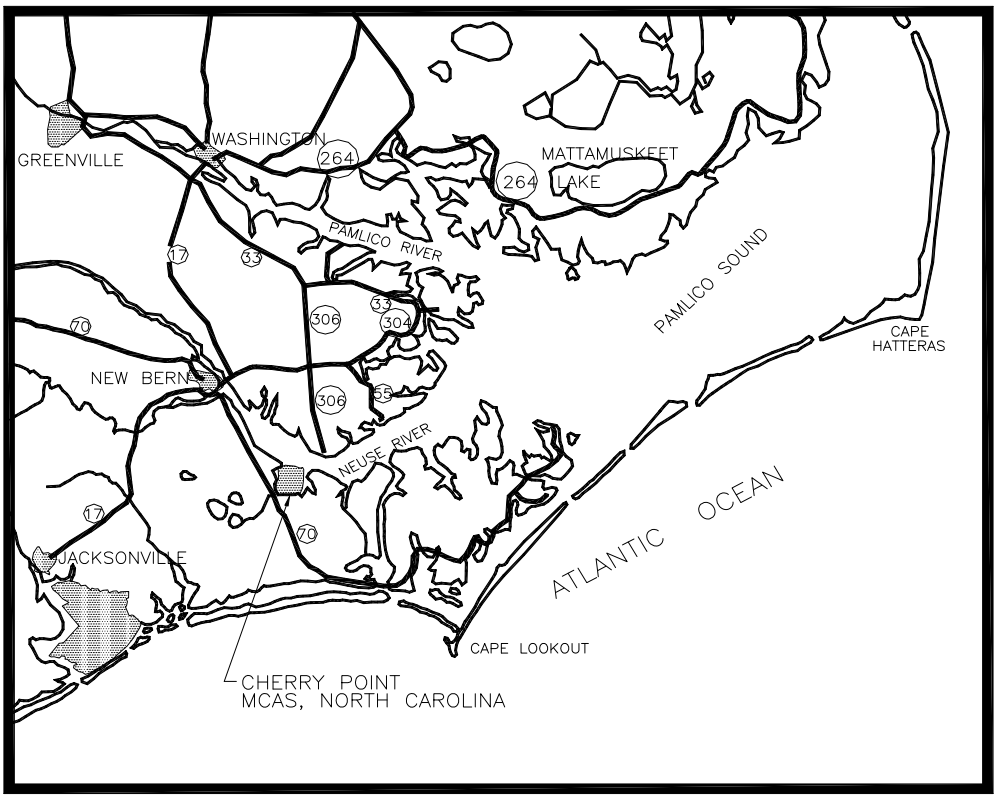

3.0.2 SITE ANALYSIS – SITE LOCATION MAP

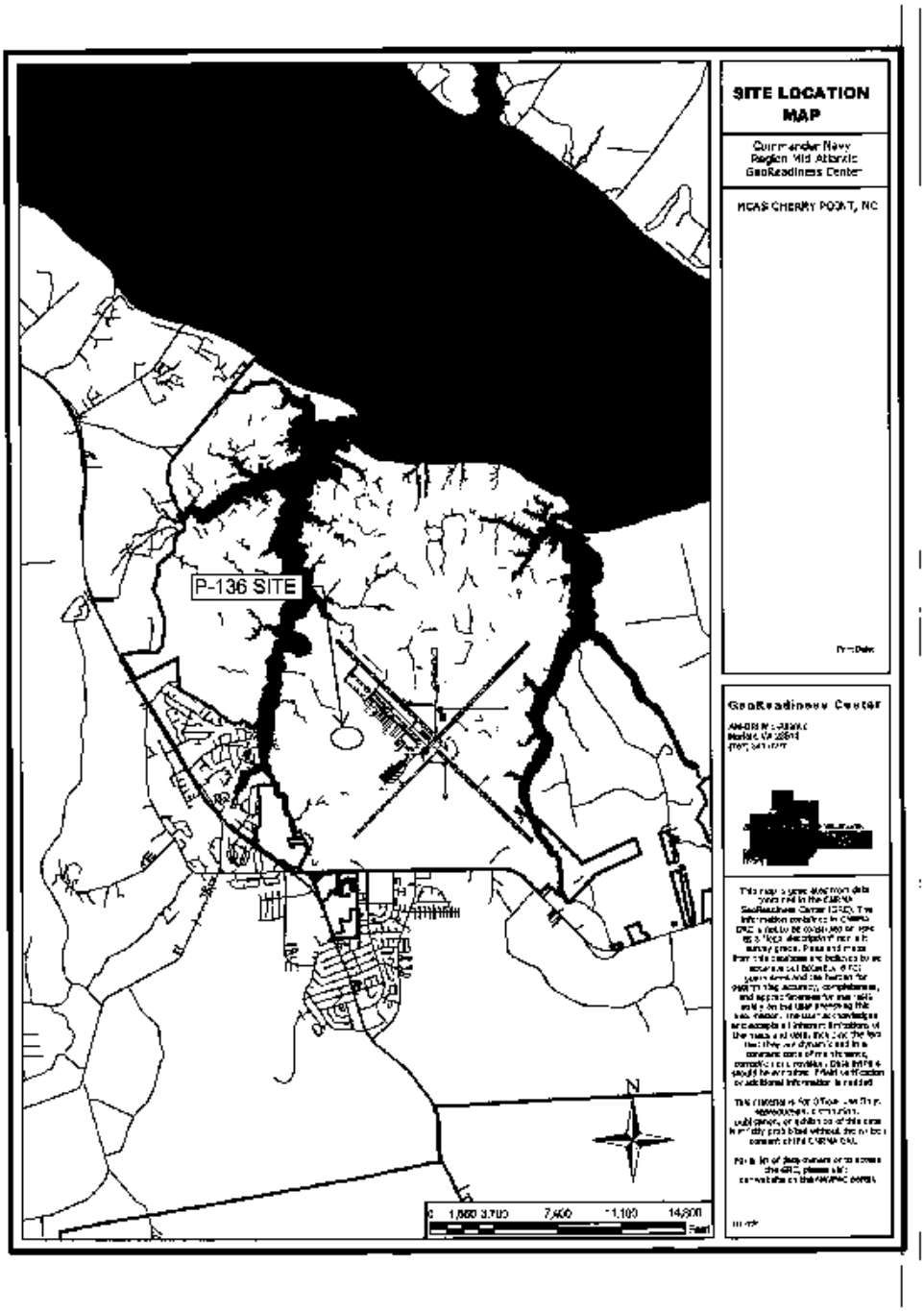

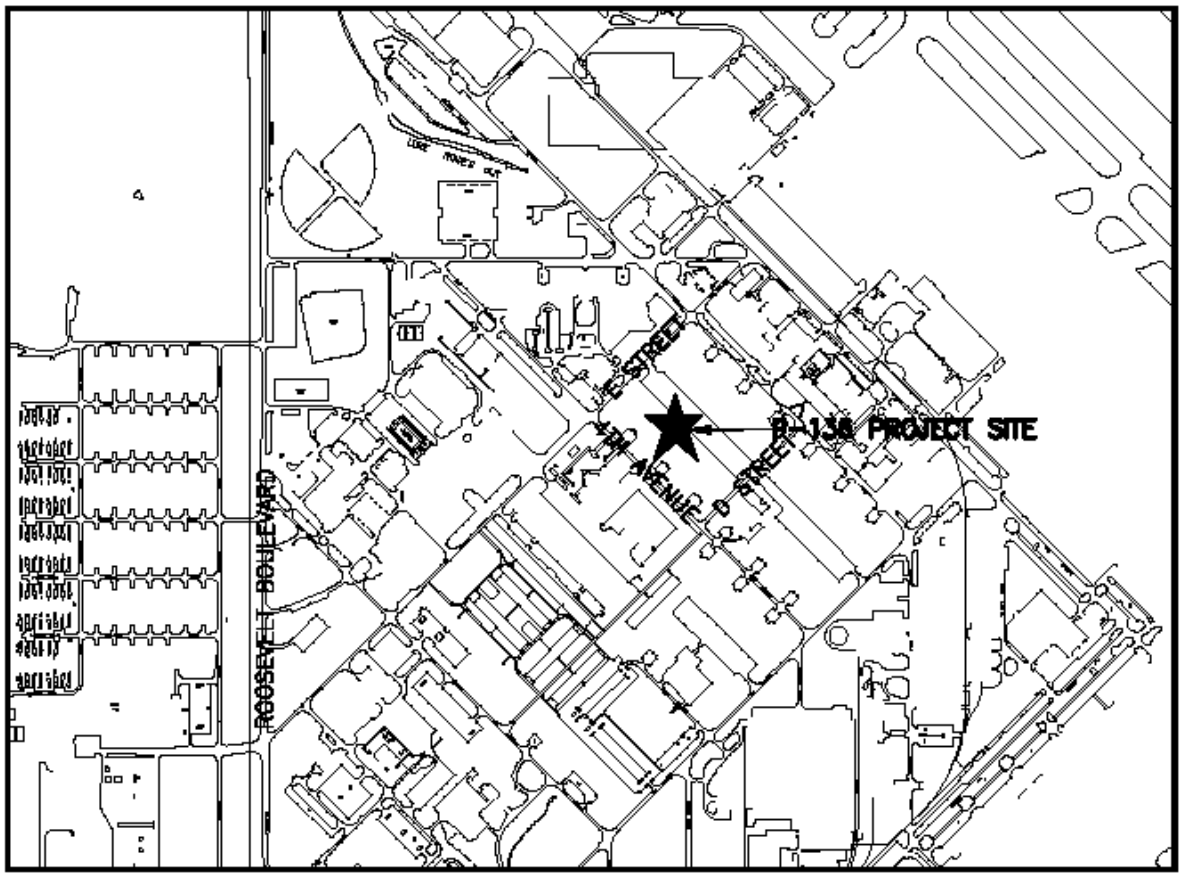

LOCATION MAP

NOT TO SCALE

3.1 Existing Site Conditions

General Project Information

The proposed P-136, Bachelors Enlisted Quarters (BEQ), project is located at MCAS Cherry Point, North Carolina and will consist of constructing two BEQs buildings, associated parking, utilities, Low Impact Development (LID) features, Stormwater Management and other site improvements.

The site of the BEQ project is located on the western portion of a tract of land bounded by 4th Avenue on the westerly side, E Street on the northerly side, 5th Avenue on the easterly side and D Street on the southerly side. The proposed improvements will be limited to the western half of the site (half way from 4th Avenue to 5th Avenue). Currently, the site, which is mainly flat with almost no vertical relief, is vacant

and covered with maintained grass with a few large trees scattered about. A training /fitness course, which will need to be relocated to another site, is located on the northwest portion of the project site.

Site Utilities

Existing utilities located on or near the project site include:

Two steam lines: One steam line (abandoned) passes through the project area in a NW/SE direction approximately 104 feet east of and parallel to 4th Avenue and the other passes through the project area in SW/NE direction approximately 123 feet south of and parallel to E Street.

Sanitary sewer lines: There is an existing 8-inch sanitary sewer line located near the eastern edge of the project area and in the existing paved parking lot. This sanitary line has a terminal manhole located on the southerly end and drains in a northwesterly direction to a manhole located near E Street where it combines with another sanitary line. From the manhole, the flow drains in a southwesterly direction in a 12-inch pipe that is located south of and parallel to E Street where it is conveyed across 4th Avenue.

There is a 10-inch water main located on the east side of 4th Street that passes through the entire frontage of the project area paralleling 4th Street. There are several 3 and 4 inch diameter water service lines stubbed out from the water main into the project area. In addition, there is an 8-inch water main located on the west side of 5th Street that passes through the entire frontage of the property paralleling 5th Street.

Both open ditch and piped storm drainage systems are located within the project area. There are drainage ditches located adjacent to both 4th Avenue and E Street with culverts located at driveway crossings. A 30" storm drain line located approximately 103 feet south of and parallel to E Street passes through the northern portion of the project area. The pipe serves as an outfall for the storm pipes that drain the parking area on the east side of the site and daylights briefly at the ditch along 4th Avenue. The pipe increases to 36" and flows across 4th Avenue. The southern end of the 4th Avenue ditch picks up flow from the far side of D Street in an 18" pipe. The drainage system in the parking area also picks up flows from the existing facilities on the south side of D Street.

Geotechnical Information

Geotechnical reports prepared for other projects are included in Part 6.

The soils information provided in this RFP reflects the soil conditions encountered only at the locations and time performed and is for reference only to provide a basis for bidding. The analysis and recommendations shall not be used for bid preparation or in the design or construction of the new facilities. The Contractor shall employ a Geotechnical Engineer to interpret the provided information in relation to the Contractor's design concept for bidding, perform additional soils investigation at the site as required for design and construction of the new facilities, and prepare a report discussing the analysis and recommendations for foundation and pavement design. The design shall be in accordance with requirements provided in other sections of Parts 3 and 4 of this RFP, as well as UFC 3-220-01N, *Geotechnical Engineering and* UFC 1 300 9N*, Design Procedures.*

Topographic Surveys

A topographic survey of the project site has been performed and is included in Part 6, Attachments.

The topographic survey has been provided to show the location of existing facilities, areas of new work required by this RFP and the character of the sites. The contractor is responsible for verifying the topographic survey and providing any additional topographic information that is required to prepare the detailed design of this project. The existence, size, and/or location of utilities are not guaranteed by the surveys provided. The Contractor shall verify the location of all utilities prior to construction. Electronic files of the topographic survey will be provided to the Contractor **only after award of the contract**.

3.2 Site Development Requirements

3.2.1 Building Footprint

This project shall include two (2) BEQ buildings of 126,460 combined total gross square feet to accommodate living space for Marine Corps bachelor enlisted personnel. The buildings shall be laid out in a way to consolidate and minimize utilities and maximize the best use of the site. Exterior concrete sidewalks, exterior equipment wash-down, and drying areas (see UFC 4-721-10 and ESR G20 Site Improvements, G204090 Other Site Improvements, Equipment Wash-down Area and Equipment Drying Area for details) and parking areas shall be constructed. Also, this area shall feature recreational facilities: lighted basketball and volleyball courts and a picnic shelter with barbeque grills.

Outside patio area(s) shall be provided for the two BEQ facilities (see ESR Part 3, G203006).

3.2.2 Vehicular Access & Circulation

See UFC 3-200-10N, *Civil Engineering* and UFC 4-721-10, *Navy and Marine Corps Bachelor Housing,* and ESR D4090 Other Fire Protection Systems for requirements and guidance.

Design access streets, driveways, and parking areas to accommodate service vehicles and fire protection equipment.

3.2.3 Parking

Provide parking in accordance with UFC 3-200-10N, *Civil Engineering* and UFC 4-721-10, *Navy and Marine Corps Bachelor Housing*.

On street parking may not be used to meet the minimum parking space requirements. Parking space layout shall not require vehicles to back onto any adjacent streets or entrance driveways. All parking shall be at 90 degrees with two-way driveway access. See Chapter 6 paragraph G2020 for specific requirements.

Provide privately owned vehicle (POV) parking spaces for 70% of the resident capacity. Provide motorcycle parking for 5% of the resident capacity. Provide bicycle parking for 5% of the resident capacity. Provide visitor parking for 2% of the resident capacity. Also provide parking as required for staff members. Provide handicap accessible parking within the main parking area with access to the main entrance.

3.2.4 Pedestrian Access & Circulation

Provide new concrete sidewalks and connect to any existing sidewalks to provide a complete exterior circulation system for access to the new BEQ buildings, recreation areas, and parking lot(s). Provide walkways and sidewalks in accordance with UFC 4-721-10, *Navy and Marine Corps Bachelor Housing*. Concrete benches and shade canopies shall be provided along walkways as appropriate.

Sidewalks will be included along the entire frontage of “E” Street and along 4th Avenue. The existing “D” Street roadway improvements will be removed and replaced with a pedestrian corridor similar to the sidewalk area on the southwest side of 4th Avenue directly across from “D” Street. The mall sidewalk will be designed to accommodate use of emergency vehicles.

As needed, include pedestrian crosswalk markings and signs for all road crossings. Crosswalk markings shall follow the standard MCAS Cherry Point ladder design. AutoCAD files of the Crosswalk markings will be provided to the Contractor if requested after award of the contract.

3.2.5 Anti-Terrorist & Force Protection (ATFP) Requirements

This project will construct billeting facilities and as such must be designed in accordance with UFC 4-010-01, *DOD Minimum Antiterrorism Standards for Building*, latest edition. The area available for development on the sites is limited by the ATFP standoff requirements. All parking, roadways, trash containers, and parking facility vehicular access shall be provided outside of the 82-foot building standoff distance for conventional construction.

3.2.6 Recreation Facilities

Provide two (2) lighted full-sized basketball courts, two (2) lighted volleyball courts, two (2) horseshoe pits, and two (2) passive recreation/picnic shelters in accordance with ESR Section G204007. Match existing nearby shelters with barbeque grills, picnic table, trash receptacle per base BEAP and potable water service with hose bibs. Provide sidewalk access to the new courts and the picnic shelter.

Approval of the final location of the courts and picnic shelters must be obtained from the Base Installation Development Division and the Contracting Officer prior to beginning work. The basketball and volleyball courts shall meet size, marking and all other requirements of the National Federation of State High School Associations (NFHS) Court and Field Diagram Guide and as stipulated elsewhere in the RFP.

Horseshoe courts shall meet all applicable requirements and specifications of the National Horseshoe Pitching Association (NHPA).

3.2.7 Site Clearing/Demolition

Clearing/Demolition work may include scattered trees in the area of the new buildings, parking lot, access drives, and other site improvements. The base intends to utilize the remaining portion of the existing parking facility that is outside of the construction limits of the proposed facilities. The contractor will be responsible for protecting any portion of the existing parking that is to remain. The contractor will be responsible for providing new entrances if the existing entrances cannot continue to provide safe access to the parking area. The existing fencing can be relocated to provide continued security for the parking area.

The Contractor will be responsible for disassembling, transporting, and reassembling the existing training /fitness course at its new location – it is intended to replicate the existing facility at the new site using the existing components. Prior to disassembling the existing training/fitness course, the Contractor shall make any measurements, take any photographs and prepare sketches they deem necessary to aid in accurately reassembling the fitness/training course at the new location.

3.2.8 Fencing

Relocate the existing fence securing the parking area just east of the project area.

3.2.9 Dumpster Pad

Provide a dumpster pad for each BEQ along with screening walls on three sides; screen wall design shall be compatible with the design of the buildings. No gates are required. Locate pads for easy accessibility, in an area that provides minimum disruption of through traffic flows while also meeting ATFP standards (82-foot standoff distance). Provide dumpster pads in an aesthetic location, outside of high visibility. Each pad shall be sized for three dumpsters in accordance with the requirements of ESR Part 3 Section G204090.

3.2.10 Landscaping

Provide Landscaping to include trees, shrubs, groundcovers, and sod all disturbed areas. Plantings shall be low maintenance and of indigenous species (excluding pine trees).

3.2.11 Site Utilities

Drawings of the existing utilities surrounding the project site are included in Part 6, Attachments.

Water

Provide domestic water service connections from the existing water mains located near 4th Avenue to each BEQ building. Individually meter all electric, water and steam to each building. Meters do not need to be viewable but must tie into the EMCS and ITRON suite software via fiber.

Fire protection shall be provided by a minimum 6-inch diameter water line to each BEQ building, isolated by a post indicator valve (PIV). New fire hydrants serving each building shall be in accordance with UFC 3-600-01, *Fire Protection Engineering for Facilities*.

Sanitary Sewer

Provide a minimum 8-inch diameter sanitary sewer main with 4-inch service connections to each new building.

Electrical

See Section ESR G40, “SITE ELECTRICAL UTILITIES”.

Telecommunications

See Section G403001 “TELECOMMUNICATIONS SYSTEMS”.

Cable TV

See Section G403002, “CABLE TV SYSTEM (CATV)”.

Steam

The project shall utilize steam heat. The steam line running across the construction site parallel to 4th Avenue is inactive and will need to be replaced. The active point of connection is at MH-19 at the north end and MH-155 at the south end. The project shall include new steam lines (steam and condensate) between MH-19 and MH-155. The contractor should additionally run new individual steam lines to each BEQ with individual cutoff valves located in each manhole.

Individually meter all electric, water and steam to each building. Meters do not need to be viewable but must tie into the EMCS and ITRON suite software via fiber.

Active steam vaults (and steam lines) must be protected and are not traffic rated. Active vault tops must remain open for proper venting. Active vaults are equipped with a pump out line (to the nearby ditch) that must be protected or replaced. Active vaults may be integrated into parking lot islands.

See Section ESR D30-1003, STEAM SUPPLY SYSTEMS

3.2.12 Stormwater Management

This project is located within the 20 Coastal Counties. The project site is located in the Neuse River Basin. The receiving waters surrounding the project are classified as SC;SW,NSW by the North Carolina Department of Environmental and Natural Resources. The strategies that will most likely affect this project site would be the regulations that enforce the preservation of and impacts to water quality.

Localized flooding is a problem in this vicinity due to the existing undersized storm drainage system. Ensure that the grading and associated stormwater runoff do not adversely affect surrounding sites. Provide positive drainage away from the buildings and all roadways and parking areas. Provide for adequate stormwater collection features to prevent flooding during higher intensity design storms.

The use of Low Impact Development (LID) is required for the project to achieve no net increase in storm water volume resulting from the 95th percentile local area design storm. The following LID features shall be considered: bioretention, dry wells, filter/buffer strips, grassed swales, bioretention swales, wet swales, rain barrels, cisterns, infiltration trenches, rain gardens, permeable pavement/pavers, and tree box filters. Comply with the Low-Impact Development Interim Guidance document. See Part 6 for LID Guidance document.

The Designer of Record (DOR) shall refer to the UFC Interim Guidance as the first source for design criteria. The DOR shall evaluate the drainage conditions and submit calculations to the government for civil and environmental review. If LID is not implemented on a project in compliance with the no net increase in storm water volume policy, the DOR must provide a LID Waiver Form which includes a written narrative explaining why LID cannot be incorporated into the project design. The NAVFAC MIDLANT Commanding Officer shall be the final approval authority for a LID waiver request.

The use of Low Impact Development (LID) stormwater management strategies are required to be used to comply with Federal Energy Policy Act requirements and Department of Navy Low Impact Development (LID) Policy for Stormwater Management, Dated 16 November, 2007 (See Part 6 Attachments). LID information is available in UFC 3-210-10, Low Impact Development and from the Low Impact Development Center, Inc, whose website can be found at www.lowimpactdevelopment.org/index.html .

The project shall be developed to also comply with North Carolina Department of Environmental and Natural Resources (NCDENR), division of Water Quality criteria and policies UFC 3-200-10N, *Civil Engineering*.

For existing pipe sizes and drainage features, see the topographic survey located in Part 6, Attachments.

No wetlands have been identified within the project site development area; however, no construction activities shall impact wetlands.

The use of retention ponds is strongly discouraged in BASH zones. Retention ponds will not be permitted without written approval of the owner.

The stormwater management design must also comply with EISA Section 438 and the EPA Technical Guidance on Implementing Stormwater Runoff Requirements for Federal Projects under Section 438 of the Energy Independence and Security Act.

Site development must conform to the North Carolina Department of Environmental and Natural Resources (NCDENR) Division of Water Quality criteria, UFC 3-200-10N, Civil Engineering, and with COMNAVREG MIDLANT INSTRUCTIONS FOR POST CONSTRUCTION STORMWATER RUNOFF MANAGEMENT INSTRUCTION, EROSION AND SEDIMENT CONTROL INSTRUCTIONS (see Part 6, Attachments).

The stormwater management design shall meet the requirements of LEED SS Credits 6.1 and 6.2.

3.2.13 Construction Access/Lay-down Areas

The Contracting Officer will determine these locations at his discretion.

3.2.14 Permits

It is the Contractor's responsibility to ensure that all permits necessary for construction have been secured prior to beginning construction. The Contractor is responsible for all permit application fees. Permits and approvals required from the State of North Carolina's Department of Environmental and Natural Resources (NCDENR) include, but are not limited to:

Erosion and Sediment Control:

The contractor is responsible for preparing an Erosion and Sedimentation Control Plan in accordance with Chapter 4 of Title 15A of the North Carolina Administrative Code (T15A.04). The North Carolina Erosion Sediment Control Planning and Design Manual should be used when determining control measures. Additionally, the checklist for Erosion and Sediment Control Plans provided in the NC manual shall be included in the permitting package. These publications can be ordered or accessed at http://www.dlr.enr.state.nc.us.

The plan will be sent to EAD for review along with the permit fee. If changes are needed, EAD will work with the Contractor via the Contracting Officer to get the plans and specifications finalized to the satisfaction of the Government. Five (5) copies of the finalized plan shall be provided. EAD will send the plan to the State for review. The Letter of Approval from NCDENR will be accompanied by a "Certificate of Plan Approval" and a NPDES Construction Permit. The Certificate of Plan Approval shall be posted at the site construction entrance. The NPDES Construction Permit requires that erosion control devices and storm water outfalls be inspected weekly (every 7 calendar days) and within 24 hrs of a 0.5 inch rain event. It shall be the responsibility of the contractor to conduct these inspections and maintain records until the area has stabilized, evident by 95% vegetative growth for areas provided seeding. To facilitate rainfall monitoring a rain gauge is required on site. Once stabilization has been accomplished, inspection records shall be forwarded to EAD, and all temporary erosion and sedimentation control devices removed. The contractor is responsible for maintaining compliance with all permits and plans, and any changes must be approved by the state prior to execution. A copy of the Erosion and Sedimentation Control Plan, Letter of Approval, and NPDES Construction permit shall be maintained by the contractor at the onsite office.
A completed Financial Responsibility/Ownership Application must be submitted, as well as plans and specifications, to MCAS Cherry Point Environmental Affairs Department (EAD),
to obtain Financial Responsibility/Ownership signatures and notarization.

NCDENR does not approve the use of straw bales for retarding or filtering sediment. Rye grass is not in the approved seeding specifications or acceptable for nurse cover for permanent grass cover.

Water Distribution System:

The successful contractor is responsible for:

Preparing a permit application for modifications to the water distribution and submitting the required documentation to MCAS Cherry Point Environmental Affairs Department (EAD) for submittal to NCDENR Public Water Supply Section (PWSS). North Carolina "Rules Governing Public Water Systems" Administrative Code Title 15A: 18C.0308 provides the requirement for plan and spec submittal. A North Carolina licensed engineer shall submit 4 copies of sealed drawings, including specifications, to EAD for submittal to the State for approval. If changes or modifications are necessary, the design engineer shall

communicate directly with the State for resolution. A copy of all State approved modifications are to be forwarded to EAD.

An Application for Approval must be submitted as well as an Engineers Report and Water System Management Plan. The Water System Management Plan (WSMP) is prepared and submitted by EAD to cover projects aboard the Air Station. The WSMP was updated August 23, 2005 and has been appointed WSMP No. 05-01426. The contractor shall be responsible for preparing the Engineers Report in accordance with Title 15A: 18C.0307 and the Application for Approval. A copy of the Application for Approval fee schedule and related information can be accessed via the Public Water Supply Section website www.deh.enr.state.nc.us/pws/index.htm. These documents, including plans and specifications and fee (paid by the Contractor) are required to be forwarded to EAD for signature and package submittal to the State.

Before construction can proceed, MCAS Cherry Point must receive an "Authorization to Construct" and letter indicating the approval of plans and specs. The authorization is good for 24 months, if the project continues longer than 24 months an extension is required. Both the "Authorization to Construct" and the letter indicating approval of plans and specifications shall be posted at the site construction entrance.

Newly-installed water supply systems, to include distribution lines, shall be disinfected and tested for chlorine residual in accordance with AWWA C651. Bacteriological testing is required after disinfection incorporating test method 312 for Total Coli form and test method 316 for Fecal / E. coli.

"Final Approval" must be granted before placing the system into service.

To receive final approval, an Applicant Certification and Engineers Certification are required for submittal. Applicant Certification will be provided by EAD. Engineers Certification shall be provided by the contractor and shall be forwarded to EAD along with system analytical results. EAD will forward the Engineer Certification, Applicant Certification, and analytical bacteriological reports of the system, requesting "Final Approval". The state may require a site visit of the system before granting Final Approval.

Sanitary Sewer:

The successful contractor is responsible for:

Preparing a permit application for Gravity Sewers and submitting to EAD for review. If changes are needed, EAD will work with the Contractor, via the Contracting Officer to get the plans and specifications finalized to the satisfaction of the Government. Upon EAD review of the permit application, EAD will submit the application, and the application fee, paid by the Contractor, to NCDENR Division of Water Quality. The Contractor is responsible for obtaining final permit approval. Coordinate all permit preparation and approval with Glenn Hartzog, EAD at (252) 466-4789.

The permit shall be obtained prior to beginning any sewer construction.

Applications can be found at: http://h2o.enr.state.nc.us/wastewater.html.

Stormwater Management Permit:

A Stormwater Management Permit Application is required for this project. The contractor shall provide the following for a State Stormwater Management Application:

- A stormwater narrative which describes pre-demolition, construction, and measures that will be taken during demolition to prevent contamination of stormwater. Narrative must indicate inspection schedule, storage, and handling of any material, management, and disposal of debris, and general description of the project. The narrative must detail proposed stormwater Best Management

Practices.
- A stormwater management permit application and any supplementary forms must be completed.
- Calculations (land disturbance, impervious area, and project size) must be provided for pre-demolition conditions, construction, and conditions during demolition.
- A set of drawings depicting the project must be provided. Drawings must have wetlands delineated (or a note that none exist), pipe sizes, and existing drainage systems.

The contractor shall submit three sets of the documents listed above to the Environmental Affairs Department. EAD will submit package to the Division of Water Quality after review. The North Carolina Department of Environment and Natural Resources has 90 days (30 days for the express permitting process) to issue a stormwater management permit following the receipt of all required information. Obtain agreement from MCAS Cherry Point for the specific stormwater management methodology prior to design/construction.
The BMP manual can be found at http://h2o.enr.state.nc.us/su/bmp_forms.htm.

Air Emission Permits:

The contractor shall follow North Carolina Division of Air Quality (NCDAQ) permitting procedures and complete a permit application package for the project. Combustion fired equipment shall meet the North Carolina and federal regulatory requirements under the Clean Air Act regarding Title V and New Source Review permit program as well as requirements under New Source Performance Standards and National Emissions Standards for Hazardous Pollutants (NESHAP). The permit application package should include required permit application forms, air emissions calculations, equipment drawings and specifications, facility diagrams and permit application fees, Based on preliminary review, it is not anticipated that these emission sources will require New Source Review (NSW) permitting; however, potential air emissions rates for these emission sources may exceed Prevention of Significant Deterioration (PSD) thresholds. PSD avoidance conditions, therefore, may be necessary. The contractor shall evaluate the following regulations and requirements and determine the applicability of these air emission sources and this permit application:

(1) New Source Review (NSW)

(2) New Source Performance Standards (NSPS)

(3) Prevention of Significant Deterioration (PSD)

(4) North Carolina Toxics Program and Air Dispersion Modeling

(5) National Emission Standards for Hazardous Air Pollutants (NESHAP)

The contractor shall submit a draft permit application to the installation through the Contracting Officer for review and approval. Submit Air Quality Permit applications for each source to the Contracting Officer for inclusion into the existing Base Title V Air Quality Permit. Upon receipt of comments, the contractor shall provide an updated and final permit application package to the Contracting Officer for signature and submission to NCDAQ. The permit application shall include computer air dispersion modeling for the air emissions as required. The contractor shall allow 6 to 12 months lead time from the time the application is submitted to the time it is issued and construction of the emission sources can begin (other construction can begin prior to permit issuance). The contractor shall be responsible for the permit application fees to NCDAQ.

3.2.15 Geospatial Information System (GIS) Deliverables

Provide geospatial data and documentation for this project in accordance with the specifications outlined in Part 5, Prescriptive Specs, of this RFP. The contractor shall submit GIS data deliverables for review and approval by the MCAS Cherry Point FACSSO GIS Manager.

3.3 Site Photos

EXISTING PARKING LOT FROM “E” STREET

EXISTING PARKING LOT FROM “D” STREET

MC TRAINING AREA TO BE RELOCATED

NORTHWEST EDGE OF SITE

SITE FROM EAST CORNER

SITE FROM SOUTH CORNER

SITE FROM WEST CORNER

SOUTHEAST EDGE OF SITE

SOUTHWEST EDGE OF SITE – 4TH STREET

TRAINING AREA FROM E STREET

--End of Section—

THIS PAGE HAS BEEN INTENTIONALLY LEFT BLANK

4.0 BUILDING REQUIREMENTS

4.1 Space Tabulation

TOTAL BEQ BUILDING GROSS AREA	**119,866 Total Square Feet (59,933 Square Feet per BEQ)**	**Proposals that do not equal or exceed the set limit of gross area will not be considered for award. Gross area calculations are to be based on Department of the Navy's policy for MARINE CORPS BARRACKS CONSTRUCTION STANDARD - BEQ CORRIDOR SQUARE FOOTAGE CALCULATION (see attachment in part 6 of this RFP) and UFC 4-721-10 NAVY AND MARINE CORPS BACHELOR HOUSING. Refer to the latest edition of UFC 4-721-10 for areas which are considered "half-scope items." These areas shall be calculated as 50% towards the gross building area; all other areas shall be calculated at 100% towards gross building area.**

Space Name	# of spaces	Unit SF (Net)	Total SF (Net)	Remarks
The number of spaces for each room below pertains to both Bachelor Enlisted Quarters. Areas provided below are subject to change based on input from users during the post-award Concept Design Workshop.				
PUBLIC SPACE				
Entrance Vestibule	2	A/R	A/R	1 per building.
Entrance Lobby	2	A/R	A/R	1 per building.
Multi-Purpose Room	2	2,875	5,750	1 per building. Square footage listed is the maximum allowable, 6.25 minimum to 12.5 maximum square feet per resident. See Section 4.4 "Space Allocation".
Laundry Room	2	920	1,840	1 per building. 400 square feet per 100 residents.
Vending / Recycling Space	2	A/R	A/R	1 per building.
Male Public Head	2	A/R	A/R	1 per building.
Female Public Head	2	A/R	A/R	1 per building.
CIRCULATION				
Interior Corridor	A/R	A/R	A/R	Interior Corridors shall be calculated as "Half Scope Items" per the MARINE CORPS BARRACKS CONSTRUCTION STANDARD - BEQ CORRIDOR SQUARE FOOTAGE CALCULATION. See notes.
Elevators	4	A/R	A/R	2 per building. Elevators and Shafts are to be calculated as "Half Scope Items" per UFC 4-721-10 NAVY AND MARINE CORPS BACHELOR HOUSING.

Mechanical, Electrical, and Plumbing chases	A/R	A/R	A/R	Count as half area per floor that they serve, per UFC 4-721-10 NAVY AND MARINE CORPS BACHELOR HOUSING. Refer to Chapter 5 “Room Requirements” for number of elevators required.
Stairs (enclosed)	6	A/R	A/R	3 per building. Stairs and Stairwells are to be calculated as "Half Scope Items" per UFC 4-721-10 NAVY AND MARINE CORPS BACHELOR HOUSING.
SUPPORT				
Electrical Room	A/R	A/R	A/R	Mechanical, electrical, telecommunications, and fire protection spaces shall not exceed 5% to 7% maximum of the total building area.
Mechanical Room	A/R	A/R	A/R	Mechanical, electrical, telecommunications, and fire protection spaces shall not exceed 5% to 7% maximum of the total building area.
Auxiliary Mechanical Room	A/R	A/R	A/R	Mechanical, electrical, telecommunications, and fire protection spaces shall not exceed 5% to 7% maximum of the total building area.
Steam Room	A/R	A/R	A/R	Mechanical, electrical, telecommunications, and fire protection spaces shall not exceed 5% to 7% maximum of the total building area.
Elevator Machine Room	2	A/R	A/R	1 per building.
Telecommunications Room	A/R	A/R	A/R	Mechanical, electrical, telecommunications, and fire protection spaces shall not exceed 5% to 7% maximum of the total building area.
Fire Protection / Pump Room	A/R	A/R	A/R	Mechanical, electrical, telecommunications, and fire protection spaces shall not exceed 5% to 7% maximum of the total building area.
Janitor Closets	6	15	90	1 per second, third, and fourth floor of each building.
Janitor Room	2	A/R	A/R	1 per building.
Small Storage Rooms	6	A/R	A/R	1 per second, third, and fourth floor of each building.
ADMINISTRATIVE				
Barracks Manager’s Office	2	A/R	A/R	1 per building.
Duty Bunk Room	2	A/R	A/R	1 per building.
Duty Head	2	A/R	A/R	1 per building.
Linen Storage Room	2	A/R	A/R	1 per building.
PRIVATE				
Double-Occupancy Units	228	408.6	93,160.8	114 per building. Unit area includes plumbing and mechanical chase areas.
Handicap-“Lite” Accessible	4	408.6	1,634.4	2 per building. Unit area includes plumbing and mechanical chase areas.
Note/ Legend:				
A/R = As Required				
The Design Build Contractor shall submit proposals in English Units.				

Per Policy, MARINE CORPS BARRACKS CONSTRUCTION STANDARD – BEQ CORRIDOR SQUARE FOOTAGE CALCULATION, issued on September 11, 2009 by the Department of the Navy (see attachments, part 6 of this RFP), internal corridors within the Marine Corps Bachelor Enlisted Quarters are "Half Scope" items. This amends the UFC 4-721-10 NAVY AND MARINE CORPS BACHELOR HOUSING and directs the designer to calculate the Interior Corridors as "half scope" (i.e., half square footage) when determining the total allowable Gross Building Area (GBA).
All excess square footage which is not reserved to meet programming and space requirements shall be assigned to the Multi-Purpose Room.

4.2 Space Relationships

Provide handicap-accessible main entrance centrally-located to the building and convenient to parking and approaching occupants from off-site.

The main entrance and staff operations shall be located central to the facility. For multiple BEQ buildings, entrances, staff operations, and public spaces may be combined and connected to each BEQ if site conditions permit. Public spaces which have areas allocated per resident shall reflect the areas of total occupants of the combined buildings.

Staff operations shall include a Barrack Manager's Office / Duty Office Check-In Area, Duty Bunk Room, and Linen Storage Room. The Barrack Manager's Office shall be adjacent to an open check-in counter with a preferred location within the Multi-Purpose Room. The check-in counter shall have direct visual access to the following areas to monitor user activities: Entrance Vestibule, Multi-Purpose Room, and Laundry Room.

Public Spaces (Multi-Purpose Room, Laundry Room, and the Vending / Recycling Space) shall be located on the first floor. These rooms shall also be located within close proximity of vertical circulation and building main entrance. An outdoor patio area with barbeque grills shall be located adjacent to Multi-Purpose Room and near outside recreational activities area.

Each BEQ shall be designed around enclosed Interior Corridors. Corridors shall extend away from, but within close walking proximity to the public areas. When corridors are longer than eighty feet in length, provide visual breaks to avoid "tunnel" effects such as, but not limited to, variation in corridor widths, change in corridor direction, recessed room entry, or corridor path angle. Other interior enhancements such as change of color / material at floors, walls, use of soffits, and recessed downlights are also encouraged.

Locate mechanical, electrical, and communication support spaces as necessary to support the systems throughout the building. The main Mechanical Room which houses large equipment shall be located on the ground floor, second floor, or as a detached structure with immediate access outside. Locate the Electrical Room and Telecommunications Room on the Ground Floor. Provide direct outside access to the Electrical Room. Additional smaller Mechanical Rooms for air handling equipment and smaller Telecommunications Rooms may be located on other floors as required. If mechanical equipment is located in the attic space and will require maintenance or repair, access shall be provided by a full stair meeting all OSHA and applicable code requirements.

4.3 Exterior Character

The design shall be in conformance with the most current edition of MCAS Cherry Point Base Exterior Architecture Plan (BEAP). The exterior building materials and colors shall be similar to those of surrounding buildings.

In addition to the BEAP requirements, adhere to the following design principles to achieve the intent for the exterior appearance:

- Attention to human scale
- Variation of roof lines
- Enhanced covered entrances and roof structure
- Broken-up and articulated elevations and massing
- Use of architectural details consistent with the BEAP, such as, but not limited to, brick or precast concrete jack arches over exterior window and door openings, precast concrete window sills, brick quoins, and cornice trim(s) at exterior eaves, windows, and doors
- Ensure bedrooms have an unobstructed view of the surrounding landscaped / activity areas
- Sunscreens on windows where appropriate

The following features are prohibited:

- Long, unbroken wall planes without planar relief
- Long, unbroken roof lines and massive, unarticulated roofs
- Flat roofs and false mansard-type roofs
- Visible roof-mounted or unscreened equipment
- Mechanical equipment enclosures such as meter closets which appear “tacked-on” to the building
- Windows and doors without trim or recess, and window and door openings flush with building facade

Exterior lighting generally increases personal safety, enhances appearance, and provides a sense of orientation and security. Provide appropriate lighting for the functional aspects of the project that are compatible with the installation and architectural design of the planned facilities.

4.4 Space Allocation

Square footage provided for individual rooms in 4.1 “Space Tabulation” are the minimum required. Below is a list of desired additional square footage allocation. The objective is to provide additional areas to spaces which will improve the quality of life while not exceeding the gross building area listed in 4.1 “Space Tabulation”. The additional areas / half scope clarifications were achieved via NAVFAC Engineering Construction Bulletins ECB 2010-01 and ECB 2010-04.

The list below is organized from the greatest importance to the least importance. The list is subject to change upon review at the Concept Design Workshop.

- Increase minimum corridor width from 5’-0” clear to 6’-0” clear
- Increase Multi-Purpose Room area from the minimum area per occupant to the maximum per occupant as described in NAVFAC Engineering Construction Bulletin 2010-04
- Increase Laundry Room from area allocated in UFC to area allocation per 100 occupants as described in NAVFAC Engineering Construction Bulletin 2010-04
- Increase area in sleeping room Heads to accommodate private toilet room while increasing the number of lavatory sinks from one to two. Refer to Part 6 “Attachments” for required room module layout.
- Any area remaining shall be allocated towards a covered roof portico at the entrance or covered patio at the Multi-Purpose Room patio area.

--End of Section--

THIS PAGE HAS BEEN INTENTIONALLY LEFT BLANK

5.0 ROOM REQUIREMENTS

ENTRANCE VESTIBULE

Space Characteristics

Function / Adjacencies: Main entrance to building. Identifies the main entrance into the building for resident check-in and guest. Centrally-located on the First Floor.

Special Dimensions: Ideal Plan Dimensions: As required. Minimum ceiling height: 9'-0".

Acoustics: Not applicable.

Access: Entrance Vestibule is accessed from the exterior leading into the Multi-Purpose Room / check-in counter area.

Number of Occupants: Not applicable.

Other / Special Requirements: All First Floor public spaces and entry / egress doors associated thereto shall be handicap-accessible and all related design elements / components (e.g. door width, door hardware, pull-force required to open door, access clearance) shall meet Architectural Barriers Act Accessibility Standards (ABAAS). Coordinate specific details and requirements with user.

UniFormat Section	Description	Qty	Size	Specific Requirements
B202002	Aluminum-Framed Storefronts	As required	As required	From exterior to Entrance Vestibule.
B202004	Insulating Glass Units	As required	As required	Low-Emissivity (Low-E) glazing or spectral glazing.
B203008	Exterior Door Hardware	As required	As required	Provide hold open / closure device for entry door.
C101001	Concrete Masonry Units	As required	As required	Provide Duraplex additive, or equal, to plaster veneer on interior face of Concrete Masonry Unit walls.
C101006	Aluminum-Framed Interior Storefronts and Doors	As required	As required	From Entrance Vestibule Into Lobby/ Interior Corridor.
C101007	Glass	As required	As required	From Entrance Vestibule into Lobby/ Interior Corridor.
C102007	Interior Door Hardware	As required	As required	
C103014	Recessed Aluminum Frame Mat	As required	Full coverage in Entrance Vestibule	Recessed into floor slab, aluminum frame with carpet inserts. See Leadership in Energy and Environmental Design (LEED), Environmental Quality (EQ) Credit 5 for mat requirements.
C302002	Floor Finishes	As required	As required	Cementitious terrazzo floor finish.
C302007	Wall Base Finishes	Linear feet	4" high	Terrazzo.
C303002	Moisture-Resistant Gypsum Board	As required	As required	
C303003	Veneer Plaster Ceiling Finish System	As required	As required	
C304001	Interior Painting	As required	As required	Paint ceilings and walls.
D3040	Air Distribution, Heating, and Cooling	As required	As required	Variable Air Volume (VAV)-Series Fan-Powered Units: Provide with reheat, provide a minimum of four air changes per hour.

D30	Heating, Ventilating, and Air Conditioning (HVAC)	As required	As required	Heating, Ventilating, and Air Conditioning (HVAC) System: Recover energy from exhaust air with total enthalpy heat wheel.
D3040	Exhaust Systems	As required	As required	Exhaust And Make-Up Air: Provide exhaust for outside air ventilation.
D3040	Air Distribution, Heating, and Cooling	As required	As required	Outside Air And Exhaust: Provide carbon dioxide demand-controlled ventilation per American Society of Heating, Refrigerating, and Air Conditioning Engineers (ASHRAE) 62.1.
D4010	Remote Annunciator Panel	As required	As required	Visual notification as required. No speaker. Fire alarm remote annunciator and Line of Communications (LOC).
D5010	Electrical	As required	As required	See D50.
D5010	Lighting	As required	As required	Accent downlights.
E201002	Window Treatment	As required	As required	Manually-operated, 3% light-filtering solar shades.

ENTRANCE LOBBY

Space Characteristics

Function / Adjacencies: Provides an open space at the building entrance for resident check-in. Adjacent to Barracks Manager's Office. Centrally-located on the First Floor.

Special Dimensions: Ideal Plan Dimensions: As required. Minimum ceiling height: 9'-0".

Acoustics: Not applicable.

Access: Access from Entrance Vestibule leading to Duty Office Check-In Area for resident check-in. Located within the Multi-Purpose Room and with visual access to the Laundry Room.

Number of Occupants: Not applicable.

Other / Special Requirements: Incorporate wall texture / architectural design element / color in Entrance Lobby to create visually-pleasing and stimulating environment. All First Floor public spaces and entry / egress doors associated thereto shall be handicap-accessible and all related design elements / components (e.g. door width, door hardware, pull-force required to open door, access clearance) shall meet Architectural Barriers Act Accessibility Standards (ABAAS). Coordinate specific details and requirements with user.

UniFormat Section	Description	Qty	Size	Specific Requirements
B202001	Aluminum Windows	As required	As required	
B202004	Insulating Glass Units	As required	As required	Low-Emissivity (Low-E) glazing or spectral glazing.
C101001	Concrete Masonry Units	As required	As required	Provide Duraplex additive, or equal, to plaster veneer on interior face of Concrete Masonry Unit walls.
C101006	Aluminum-Framed Interior Storefront and Doors	As required	As required	From Entrance Vestibule to Lobby.
C101007	Glass	As required	As required	
C102007	Interior Door Hardware	As required	As required	
C301002	Cement Plaster	As required	As required	To be applied to all exposed Concrete Masonry Unit (CMU) and concrete wall surfaces.
C302002	Floor Finishes	As required	1-0" x 1'-0"	Flooring System: Terrazzo floor finish.
C302002	Wall Base Finishes	As required	4" high	Terrazzo.
C303001	Acoustical Ceiling Panels	As required	See specific requirements	2'-0" x 2'-0" with tegular edge.
C303005	Exposed Suspended Acoustical Ceiling Grid	As required	See specific requirements	9/16" grid.
C304001	Interior Paint	As required	As required	Paint finishes to concrete or Concrete Masonry Unit (CMU) wall surfaces. Include one painted accent wall.
D30	Heating, Ventilating, and Air Conditioning (HVAC)	As required	As required	Heating, Ventilating, and Air Conditioning (HVAC) System: Recover energy from exhaust air with total enthalpy heat wheel.
D3040	Exhaust Systems	As required	As required	Exhaust And Make-Up Air: Provide exhaust for outside air ventilation.

D3040	Air Distribution, Heating, and Cooling	As required	As required	Outside Air And Exhaust: Provide carbon dioxide demand-controlled ventilation per American Society of Heating, Refrigerating, and Air Conditioning Engineers (ASHRAE) 62.1.
D50	Electrical	As required	As required	See D50.
D50	Lighting	As required	As required	Down-lighting and direct / indirect fluorescents.

MULTI-PURPOSE ROOM

Space Characteristics

Function / Adjacencies: Provides a space to accommodate various concurrent activities for residents such as:

- Internet cafeteria area
- Video gaming stations
- Audio-visual theater area
- Small kitchenette area for microwave, double sink and full-size refrigerator
- Superior-quality furniture design

Special Dimensions: Space shall meet Architectural Barriers Act Accessibility Standards (ABAAS). Refer to Part 3, Chapter 4.4 “Space Allocation” of this RFP for additional square footage allocation into the Multi-Purpose Room. Minimum ceiling height: 12’-0” or greater.

Acoustics: Provide appropriate acoustical separation from adjacent spaces.

Access: Accessed directly from Entrance Lobby. Direct access to exterior and to Laundry Room. Coordinate all room entry details and requirements with user. Room shall also be located near Male and Female Public Heads and Vending / Recycling Space. Direct access to / from exterior shall also be provided to adjacent exterior patio area with gas grilles.

Number of Occupants: Gathering space for small and large parties.

Other / Special Requirements: A large bank of interior windows shall provide visual access between Multi-Purpose Room and Laundry Room; additional interior windows for visual access between Barracks Manager’s Office and Multi-Purpose Room. Coordinate interior views with user. Exterior windows shall have solar shades and black-out drapery. Accent walls shall be incorporated with floor pattern and carpet tile. Break up room into several activity areas.

Construct a small Closet with lockable door adjacent to the built-in cabinets within the Multi-Purpose Room.

Provide dimmable downlights and zoned lighting.

All First Floor public spaces and entry / egress doors associated thereto shall be handicap-accessible and all related design elements / components (e.g. door width, door hardware, pull-force required to open door, access clearance) shall meet Architectural Barriers Act Accessibility Standards (ABAAS). Coordinate specific details and requirements with user. Doors from Interior Corridor may be eliminated.

UniFormat Section	Description	Qty	Size	Specific Requirements
B202001	Aluminum Windows	As required	As required	Anti-Terrorism / Force Protection (ATFP). Provide solid surfacing sills.
B202004	Insulating Glass Units	As required	As required	Low-Emissivity (Low-E) glazing or spectral glazing.
B203001	Steel Doors and Frames	As required	As required	Thermally-insulated for doors leading to the exterior. Doors shall be solid surfacing. Steel doors and frames shall be factory-primed, field-painted.
B203008	Exterior Door Hardware	As required	As required	
C101001	Concrete Masonry Units	As required	As required	Provide Duraplex additive, or equal, to plaster veneer on interior face of Concrete Masonry Unit walls.
C101005	Aluminum Windows	As required	As required	Fixed windows interior.
C101007	Glass	As required	As required	
C102001	Standard Steel Doors and Frames	As required	As required	Provide vision panel in upper half.
C102007	Interior Door Hardware	As required	As required	
C103003	Markerboard and Tackboards	1 each	4’-0” x 8’-0”	

C103009	Casework	As required	See specific requirements	Lockable wall and base cabinets. Area for minor food preparation with countertop microwave oven. Minimum of 10'-0" linear feet.
C103008	Counters	As required	See specific requirements	Provide 4"-high solid-surfacing back and side splash along countertop perimeter. Minimum of 10'-0" linear feet.
C103090	Other Interior Specialties	2 each	As required	Ceiling-Mounted Fan: Fan speed operated by separate wall switches. Ceiling fan light kits are prohibited. Ceiling fan shall have a neutral painted finish. Ceiling fan shall be securely-mounted per manufacturer's installation instructions.
C103090	Other Interior Specialties	2 each	As required	Articulating wall mounts for televisions (televisions shall be Furniture, Fixtures, and Equipment (FF&E)). Coordinate height and location with power and Cable Television (CATV). Height shall be determined.
C302002	Floor Finishes	As required	As required	Cementitious Terrazzo floor finish. Incorporate two accent colors.
C302005	Carpet Tile	As required	As required	Provide a mix of floor finishes for this space. Determine in the Concept Design Workshop (CDW).
C301002	Cement Plaster	As required	As required	To be applied to all exposed Concrete Masonry Unit (CMU) and concrete wall surfaces.
C302002	Wall Base Finishes	As required	4" high	Terrazzo.
C303001	Acoustical Ceiling Panels	As required	See specific requirements	2'-0" x 2'-0" with a reveal edge.
C303002	Gypsum Wallboard Ceiling Finishes	As required	As required	
C304001	Interior Painting	As required	As required	Provide painted accent walls.
D201004	Sinks	1 each	See specific requirements	Countertop Kitchen Sink: Provide single-bowl stainless-steel under-mount sink in countertop. Minimum depth of 10" with goose neck faucet.
D30	Heating, Ventilating, and Air Conditioning (HVAC)	As required	As required	Heating, Ventilating, and Air Conditioning (HVAC) Systems: Provide pre-conditioned outside air, return, exhaust, and Variable Air Volume (VAV) supply for each Module.
D304001	Air Distribution, Heating, and Cooling	As required	As required	Variable Air Volume (VAV)-Series Fan-Powered Units: Provide with reheat, provide a minimum of four air changes per hour.
D309090	Heating, Ventilating, and Air Conditioning (HVAC)	As required	As required	Heating, Ventilating, and Air Conditioning (HVAC) System: Recover energy from exhaust air with total enthalpy heat wheel.
D3040	Exhaust Systems	As required	As required	Provide exhaust for outside air ventilation.
D3030	Cooling Generating Systems	As required	As required	Direct Expansion Systems: Provide separate heat-pump system with an independent thermostatic control and supplemental hot water heating coil.
D3040	Air Distribution, Heating, and Cooling	As required	As required	Outside Air And Exhaust: Provide carbon dioxide demand-controlled ventilation per American Society of Heating, Refrigerating, and Air Conditioning Engineers (ASHRAE) 62.1.
D502002	Lighting Equipment	As required	As required	Dimmable Lighting System with separate zones for functional requirements. See D50.

D503001	Telecommunications Systems	See specific requirements	As required	Provide combination data / phone outlets. Each outlet shall have one 8-pin Registered Jack (RJ) and one 8-pin Registered Jack (RJ)-45. Provide combination outlets, as required to support room function, and a minimum of one per perimeter wall.
D503006	Television Systems	See specific requirements	As required	Provide a total of two Cable Television (CATV) outlets located on opposing walls. Height To Be Determined (TBD).
E201002	Window Treatments	As required	As required	Manually-operated light-filtering solar shades with 3% openness.

LAUNDRY ROOM

Space Characteristics

Function / Adjacencies: Provides the building occupants with complete laundry services. Located on the First Floor adjacent to the Multi-Purpose Room.

Special Dimensions: Sized to accommodate a minimum of one washer and two dryers for every twelve residents (see special requirements). Commercial-grade top-loading washer and front-loading dryers should be planned for (units provided and installed under the Furniture, Fixtures, and Equipment (FF&E) Package). Laundry Room shall meet Architectural Barriers Act Accessibility Standards (ABAAS). Minimum ceiling height: 9'-0".

Acoustics: Provide appropriate acoustical separation from adjacent spaces.

Access: Laundry Room shall be located on the First Floor adjacent to the Multi-Purpose Room. Interior physical and visual access from the Multi-Purpose Room and Duty Office Check-In Area. Direct access to / from exterior may also be provided. Coordinate all interior and exterior room entry details and requirements with user.

Number of Occupants: Varies.

Other / Special Requirements: A large bank of interior windows shall provide visual access between Laundry Room and Multi-Purpose Room. Provide three wash sinks remote to each other and located near washing machines, provide 1.5 linear feet of folding tables per washer, clothes hanging area with hanging rods, and four feet of full-height hanging area for drip-dry clothing. Set aside a 3'-0" x 6'-0" space for laundry vending machines (verify size and quantity of vending with user).

All First Floor public spaces and entry / egress doors associated thereto shall be handicap-accessible and all related design elements / components (e.g. door width, door hardware, pull-force required to open door, access clearance) shall meet Architectural Barriers Act Accessibility Standards (ABAAS). Coordinate specific details and requirements with user. Provide skylights or windows for natural lighting.

Heating, Ventilating, and Air Conditioning (HVAC): A plenum shall supply outdoor air directly to the dryers with no mixing of Laundry Room conditioned air.

UniFormat Section	Description	Qty	Size	Specific Requirements
B202001	Exterior Windows	As required	As required	Anti-Terrorism / Force Protection (ATFP). Provide solid surfacing sills.
B202004	Insulating Glass Units	As required	As required	Low-Emissivity (Low-E) glazing or spectral glazing.
B203001	Steel Doors and Frames	As required	3'-0" x 7'-0"	Thermally-insulated for doors leading to the exterior. Doors shall be solid surfacing. Steel doors and frames shall be factory-primed, field-painted.
B203008	Exterior Door Hardware	As required	As required	
C101001	Concrete Masonry Units	As required	As required	Provide Duraplex additive, or equal, to plaster veneer on interior face of Concrete Masonry Unit walls.
C101005	Aluminum Windows	As required	As required	Fixed windows.
C101007	Laminated Glass	As required	As required	
C102001	Interior Doors	1	3'-0" x 7'-0"	Factory-primed, field-painted solid core wood doors with stained finish and steel frames.
C103003	Marker Boards and Tack Boards	1 each	4'-0" x 6'-0"	
C103004	Identifying Devices	As required	As required	
C103008	Counters	As required	2'-0" Deep	Fixed solid surfacing counters for folding laundry.

C102007	Interior Door Hardware	As required	As required	
C301002	Cement Plaster	As required	As required	To be applied to all exposed Concrete Masonry Unit (CMU) and concrete wall surfaces.
C101005	Interior Windows	As required	As required	View to Multi-Purpose Room and Duty Office Check-In Area. Steel frame.
C303002	Gypsum Wallboard Ceiling Finishes	As required	As required	
C302001	Flooring System	As required	As required	Quartz epoxy coating: Seamless, impervious, skid-resistant finish epoxy flooring.
C303005	Exposed Suspended Acoustical Ceiling Grid	As required	As required	
C302007	Wall Base Finishes	As required	4” high	Epoxy base.
C304001	Interior Painting	As required	As required	Paint finishes to Concrete Masonry Unit (CMU) wall and paint ceilings.
D201004	Sinks	3 each	As required	Laundry sinks.
D202005	Specialties	As required	As required	Coordinate details of washing machine connections / dryer venting for washers and dryers with users.
D203003	Floor Drains	As required	As required	
D30	Heating, Ventilating, and Air Conditioning (HVAC)	As required	As required	Heating, Ventilating, and Air Conditioning (HVAC) Systems: Provide pre-conditioned outside air, return, exhaust, and Variable Air Volume (VAV) supply.
D304001	Air Distribution, Heating, and Cooling	As required	As required	Variable Air Volume (VAV)-Series Fan-Powered Units: Provide with reheat, provide a minimum of four air changes per hour.
D30	Heating, Ventilating, and Air Conditioning (HVAC)	As required	As required	Outside Air For Dryers: Provide variable speed control for make-up air to dryers. Provide control of air to dryer fan motor. Dryers located in air plenum.
D309090	Heating, Ventilating, and Air Conditioning (HVAC)	As required	As required	Heating, Ventilating, and Air Conditioning (HVAC) System: Recover energy from exhaust air with total enthalpy heat wheel.
D3040	Exhaust Systems	As required	As required	Provide exhaust for outside air ventilation.
D3040	Air Distribution, Heating, and Cooling	As required	As required	Outside Air And Exhaust: Provide carbon dioxide demand-controlled ventilation per American Society of Heating, Refrigerating, and Air Conditioning Engineers (ASHRAE) 62.1.
D304007	Exhaust	As required	As required	Exhaust For Dryers: Provide exhaust for each dryer to outside, provide make-up air.
E201002	Window Treatments	1 each	As required	Manually-operated, light-filtering solar shades.

VENDING / RECYCLING SPACE

Space Characteristics

Function / Adjacencies: Provides a space for vending and recycling needs of the facility.

Special Dimensions: Ideal Plan Dimensions: Size to support a minimum of three vending machines. Contractor shall coordinate actual number and size details with user. Minimum ceiling height: 9'-0".

Acoustics: Not applicable.

Access: Vending / Recycling Space may be accessed from the Multi-Purpose Room, Laundry Room, Interior Corridor, or near the Multi-Purpose Room. Vending shall be in alcove for acoustical reasons.

Number of Occupants: Not applicable.

Other / Special Requirements: All First Floor public spaces shall be handicap-accessible and all related design elements / components shall meet Architectural Barriers Act Accessibility Standards (ABAAS). Coordinate specific details and requirements with user.

UniFormat Section	Description	Qty	Size	Specific Requirements
C101001	Concrete Masonry Units	As required	As required	Provide Duraplex additive, or equal, to plaster veneer on interior face of Concrete Masonry Unit walls.
C301002	Cement Plaster	As required	As required	To be applied to all exposed Concrete Masonry Unit (CMU) and concrete wall surfaces.
C302007	Floor Finishes	As required	As required	Cementitious terrazzo floor finish.
C302007	Wall Base Finishes	As required	4" high	Terrazzo.
C303002	Impact-Resistant Gypsum Board	As required	As required	
C303002	Gypsum Wallboard Ceiling Finishes	As required	As required	
C304001	Interior Painting	As required	As required	Paint finishes to Concrete Masonry Unit (CMU) wall and paint ceilings.
D30	Heating, Ventilating, and Air Conditioning (HVAC)	As required	As required	Heating, Ventilating, and Air Conditioning (HVAC) Systems: Provide pre-conditioned outside air, return, exhaust, and Variable Air Volume (VAV) supply for each Module.
D304001	Air Distribution, Heating, and Cooling	As required	As required	Variable Air Volume (VAV)-Series Fan-Powered Units: Provide with reheat, provide a minimum of four air changes per hour.
D309090	Heating, Ventilating, and Air Conditioning (HVAC)	As required	As required	Heating, Ventilating, and Air Conditioning (HVAC) System: Recover energy from exhaust air with total enthalpy heat wheel.
D3040	Exhaust Systems	As required	As required	Provide exhaust for outside air ventilation.
D3040	Air Distribution, Heating, and Cooling	As required	As required	Outside Air And Exhaust: Provide carbon dioxide demand-controlled ventilation per American Society of Heating, Refrigerating, and Air Conditioning Engineers (ASHRAE) 62.1.
D50	Electrical	As required	As required	Separate circuit for each vending machine.

MALE PUBLIC HEAD

Space Characteristics

Function / Adjacencies: Provides space for public access to Heads. Adjacent to Entrance Lobby / Interior Corridor near the Multi-Purpose Room.

Special Dimensions: Ideal Plan Dimensions: Space shall meet Architectural Barriers Act Accessibility Standards (ABAAS). Minimum ceiling height: 9'-0".

Acoustics: Not applicable.

Access: Access shall be conveniently-located adjacent to the Multi-Purpose Room and the Entrance Lobby.

Number of Occupants: 1.

Other / Special Requirements: Not applicable.

UniFormat Section	Description	Qty	Size	Specific Requirements
C101001	Concrete Masonry Units	As required	As required	Provide Duraplex additive, or equal, to plaster veneer on interior face of Concrete Masonry Unit walls.
C101001	Metal Support Assemblies	As required	As required	Suspended and furred ceilings.
C102001	Doors and Frames	1 each	3'-0" x 7'-0"	Factory-primed, field-painted solid core wood doors with stained finish and steel frames.
C102007	Interior Door Hardware	As required	As required	Sound isolation shall have a Sound Transmission Class (STC) rating of at least 41.
C103002	Toilet and Bath Accessories	As required	See specific requirements	Double toilet tissue dispenser, wall mirror shall be full-width of counter top, combination unit paper towel dispenser / disposal, soap dispenser, grab bars. Coat hook on the door.
C301002	Cement Plaster	As required	As required	To be applied to all exposed Concrete Masonry Unit (CMU) and concrete wall surfaces.
C301004	Tile and Terrazzo Wall Finishes	As required	10" x 10" Minimum	Porcelain Tile Wall Wainscot: Height 4'-0" Above Finished Floor (AFF) with coordinating accent border.
C302001	Tile Floor Finishes	As required	10" x 10" Minimum	Provide porcelain tile finish floors and wall base in Head area. Epoxy grout shall be used.
C103008	Counters		Square feet	½" solid surfacing material with a solid wood substrate. Provide 4"-high solid surfacing back and side splash behind Head countertop.
C303002	Moisture-Resistant Gypsum Board	As required	As required	
C304001	Interior Painting	As required	As required	Painted gypsum board ceilings.
D201001	Water Closets	1 each	As required	Flush-valve type water Closets.
D201002	Urinal	1 each	As required	Dual-flush-valve type water Closets.
D201003	Lavatories	1 each	As required	½" solid surfacing countertop lavatories in Heads shall have under-mounted solid surfacing sinks integral to the countertop.

D304007	Exhaust Systems	As required	As required	Fan separately-switched from light fixture. All exhaust from Heads shall be centralized and energy reclaimed through heat wheel. Exhaust and ventilation shall meet North Carolina Mechanical Code and American Society of Heating, Refrigerating, and Air Conditioning Engineers (ASHRAE) 62.
D30	Heating, Ventilating, and Air Conditioning (HVAC)	As required	As required	Heating, Ventilating, and Air Conditioning (HVAC) Systems: Provide pre-conditioned outside air, return, exhaust, and Variable Air Volume (VAV) supply for each Module.
D304001	Air Distribution, Heating, and Cooling	As required	As required	Variable Air Volume (VAV)-Series Fan-Powered Units: Provide with reheat, provide a minimum of four air changes per hour.
D309090	Heating, Ventilating, and Air Conditioning (HVAC)	As required	As required	Heating, Ventilating, and Air Conditioning (HVAC) System: Recover energy from exhaust air with total enthalpy heat wheel.
D3040	Exhaust Systems	As required	As required	Provide exhaust for outside air ventilation.
D3040	Air Distribution, Heating, and Cooling	As required	As required	Outside Air And Exhaust: Provide carbon dioxide demand-controlled ventilation per American Society of Heating, Refrigerating, and Air Conditioning Engineers (ASHRAE) 62.1.
D50	Electrical	As required	As required	120-volt circuit for electric flush valves and faucets. See D50.

FEMALE PUBLIC HEAD

Space Characteristics

Function / Adjacencies: Provides space for public access to Heads. Adjacent to Entrance Lobby / Interior Corridor near Multi-Purpose Room.

Special Dimensions: Ideal Plan Dimensions: Space shall meet Architectural Barriers Act Accessibility Standards (ABAAS). Minimum ceiling height: 9'-0".

Acoustics: Not applicable.

Access: Access shall be conveniently-located adjacent to the Multi-Purpose Room and Entrance Lobby.

Number of Occupants: 1.

Other / Special Requirements: Not applicable.

UniFormat Section	Description	Qty	Size	Specific Requirements
C101001	Concrete Masonry Units	As required	As required	Provide Duraplex additive, or equal, to plaster veneer on interior face of Concrete Masonry Unit walls.
C102001	Interior Doors and Standard Steel Frames	1 each	3'-0" x 7'-0"	Factory-primed, field-painted solid core wood doors with stained finish and steel frames.
C102007	Interior Door Hardware	As required	As required	Sound isolation shall have a Sound Transmission Class (STC) rating of at least 41.
C103002	Toilet and Bath Accessories	As required	See specific requirements	Double toilet tissue dispenser, wall mirror shall be full-width of counter top, combination unit paper towel dispenser / disposal, soap dispenser, grab bars. Coat hook on the door.
C301002	Cement Plaster	As required	As required	To be applied to all exposed Concrete Masonry Unit (CMU) and concrete wall surfaces.
C103008	Counters	As required	Square feet	½" solid surfacing material with a solid wood substrate. Provide 4"-high solid surfacing back and side splash behind Head countertop.
C301004	Tile and Terrazzo Wall Finishes	As required	10" x 10" Minimum	Porcelain Tile Wall Wainscot: Height 4'-0" Above Finished Floor (AFF) with coordinating accent border.
C302001	Tile Floor Finishes	As required	10" x 10" Minimum	Provide porcelain tile finish floors and wall base in Head area. Epoxy grout shall be used.
C303002	Moisture-Resistant Gypsum Board	As required	As required	
C304001	Interior Painting	As required	As required	Painted gypsum board ceilings.
D201001	Water Closets	1 each	As required	Dual-flush-valve type water Closets.
D201003	Lavatories	1 each	As required	½" solid surfacing countertop lavatories in Heads shall have under-mounted solid surfacing sinks integral to the countertop.
D304007	Exhaust Systems	As required	As required	Fan separately-switched from light fixture. All exhaust from Heads shall be centralized and energy reclaimed through heat wheel. Exhaust and ventilation shall meet North Carolina Mechanical Code and American Society of Heating, Refrigerating, and Air Conditioning Engineers (ASHRAE) 62.
D30	Heating, Ventilating, and Air Conditioning (HVAC)	As required	As required	Heating, Ventilating, and Air Conditioning (HVAC) Systems: Provide pre-conditioned outside air, return, exhaust, and Variable Air Volume (VAV) supply for each Module.

D3040	Air Distribution, Heating, and Cooling	As required	As required	Variable Air Volume (VAV)-Series Fan-Powered Units: Provide with reheat, provide a minimum of four air changes per hour.
D309090	Heating, Ventilating, and Air Conditioning (HVAC)	As required	As required	Heating, Ventilating, and Air Conditioning (HVAC) System: Recover energy from exhaust air with total enthalpy heat wheel.
D3040	Exhaust Systems	As required	As required	Provide exhaust for outside air ventilation.
D3040	Air Distribution, Heating, and Cooling	As required	As required	Outside Air And Exhaust: Provide carbon dioxide demand-controlled ventilation per American Society of Heating, Refrigerating, and Air Conditioning Engineers (ASHRAE) 62.1.
D50	Electrical	As required	As required	120-volt circuit for electric flush valves and faucets. See D50.

INTERIOR CORRIDOR

Space Characteristics

Function / Adjacencies: Provides circulation space throughout the facility.

Special Dimensions: Minimum Interior Corridor width to meet National Fire Protection Association (NFPA) 101 but not less than 6'-0". Add Gypsum Wall Board (GWB) dropped ceiling at a minimum of 8'-0" Above Finished Floor (AFF) to add interest and Acoustical Ceiling Panels (ACP) ceilings shall be minimum of 8'-8" above finished floor.

Acoustics: Not applicable.

Access: Interior Corridors provide access to elevator and stairs.

Number of Occupants: Not applicable.

Other / Special Requirements: Interior Style: User desires odd-numbered rooms on one side of the Interior Corridor and even-numbered rooms on the other side. Provide lighting, switches, and convenience outlets per code, regulation, and requirements. Coordinate with user. Provide visual interest and eliminate tunnel effect by the use of color / material changes in walls and floors, soffits, recessed downlights, and recessed wall surface planes.

UniFormat Section	Description	Qty	Size	Specific Requirements
B203001	Steel Doors and Frames	As required	3'-0" x 7'-0"	Steel Doors And Frames: Thermally-insulated for doors leading to the exterior. Doors and frames shall be factory-primed and field-painted.
B203008	Exterior Door Hardware	As required	As required	Fully weather stripped.
C101001	Concrete Masonry Units	As required	As required	Provide Duraplex additive, or equal, to plaster veneer on interior face of Concrete Masonry Unit walls.
C102001	Standard Steel Doors and Frames	As required	As required	
C301002	Cement Plaster	As required	As required	To be applied to all exposed Concrete Masonry Unit (CMU) and concrete wall surfaces.
C102007	Interior Door Hardware	As required	As required	
C101001	Interior Partitions	As required	As required	Full-height ground-face Concrete Masonry Unit (CMU) (two colors one above 40" one below) accent areas in Interior Corridor. Provide recessed area along Interior Corridor to create opportunities for painted accent walls.
C103004	Identifying Devices	As required	As required	
C302002	Floor Finishes	As required	As required	Cementitious terrazzo floor finish. Incorporate two accent colors.
C302002	Wall Base Finishes	As required	4" high	Terrazzo.
C303001	Acoustical Ceiling Panels	As required	See specific requirements	2'-0" x 2'-0" with a reveal edge.
C303002	Gypsum Wallboard Ceiling Finishes	As required	As required	Soffits shall be incorporated at room Module entrance doors to break up Interior Corridor from tunnel effect.
C303005	Exposed Suspended Acoustical Ceiling Grid	As required	As required	
C304001	Interior Painting	As required	As required	Provide painted accent walls, minimum of two colors.

D30	Heating, Ventilating, and Air Conditioning (HVAC)	As required	As required	Heating, Ventilating, and Air Conditioning (HVAC) Systems: Provide pre-conditioned outside air, return, exhaust, and Variable Air Volume (VAV) supply.
D3040	Air Distribution, Heating, and Cooling	As required	As required	Variable Air Volume (VAV)-Series Fan-Powered Units: Provide with reheat, provide a minimum of four air changes per hour.
D309090	Heating, Ventilating, and Air Conditioning (HVAC)	As required	As required	Heating, Ventilating, and Air Conditioning (HVAC) System: Recover energy from exhaust air with total enthalpy heat wheel.
D3040	Exhaust Systems	As required	As required	Provide exhaust for outside air ventilation.
D3040	Air Distribution, Heating, and Cooling	As required	As required	Outside Air And Exhaust: Provide carbon dioxide demand-controlled ventilation per American Society of Heating, Refrigerating, and Air Conditioning Engineers (ASHRAE) 62.1.
D5010	Electrical	As required	As required	See D50.

ELEVATORS

Space Characteristics

Function / Adjacencies: Provide vertical circulation between floors for movement of passengers and building furniture and equipment. Located adjacent to Lobby.

Special Dimensions: Large accessible passenger elevator(s) with freight class loading of "A", in accordance with American Society of Mechanical Engineers (ASME) A17.1, capable of moving both passenger and furniture and building equipment. Speed and rated load capacity of the elevator(s) shall be based on designer's survey of the facility user needs. The elevator shall meet accessibility requirements per Architectural Barriers Act Accessibility Standards (ABAAS). Elevator cab shall be sized so that an emergency medical stretcher may be positioned in full horizontal position with doors closed. Minimum ceiling height: 8'-0".

Acoustics: Not applicable.

Access: Elevators shall be accessed from the Interior Corridor and centrally-located in the building.

Number of Occupants: Not applicable.

Other / Special Requirements: Meet "ITG NAVFAC Elevator Design Guide (2001)". Provide one elevator for three floors or less, and two elevators for four or five floors. Use hydraulic elevator systems for floor service not to exceed 44'-0". Use traction elevator systems for floor service above 44'-0".

UniFormat Section	Description	Qty	Size	Specific Requirements
C102007	Door Hardware	As required	As required	
C102090	Elevator Doors	As required	As required	
C301090	Plastic Laminate Wall Finishes	As required	As required	As recommended by elevator manufacturer.
C302004	Resilient Floor Finishes	As required	As required	Resilient Flooring System: Rubber floor finish. Provide Architectural Barriers Act Accessibility Standards (ABAAS)-compliant transition from terrazzo flooring area.
C303090	Other Ceiling and Ceiling Finishes	As required	As required	As recommended by elevator manufacturer.
D101002	Passenger Elevator	1 each	As required	Elevator requires Naval Facilities Engineering Command (NAVFAC) approval.
D203004	Plumbing	As required	As required	Drainage: Provide oil / water separator to serve the Elevator Machinery Room and elevator shaft floor drains / sumps. Provide a sump pump.
D30	Heating, Ventilating, and Air Conditioning (HVAC)	As required	As required	Provide Heating, Ventilating, and Air Conditioning (HVAC) of elevator shaft and Elevator Equipment Room.
D30	Heating, Ventilating, and Air Conditioning (HVAC)	As required	As required	Elevator: Provide ventilation. Outside air make-up and exhaust for shaft and Elevator Equipment Room.
D50	Electrical	As required	As required	See D50.

ENCLOSED STAIRWAY

Space Characteristics

Function / Adjacencies: Provides vertical circulation between floors.

Special Dimensions: Ideal Plan Dimensions: Meet all applicable codes, regulations, and requirements including National Fire Protection Association (NFPA) 101. Minimum ceiling height: As required.

Acoustics: Not applicable.

Access: Accessed from the Interior Corridor with exits directly to the exterior. Provide stairway access to mechanical equipment if located in attic and roof access for fire personnel at each stair.

Number of Occupants: Not applicable.

Other / Special Requirements: Not applicable.

UniFormat Section	Description	Qty	Size	Specific Requirements
B203001	Steel Doors and Frames	As required	3'-0" x 7'-0"	Steel Doors And Frames: Thermally-insulated for doors leading to the exterior. Doors and frames shall be factory-primed and field-painted.
B203008	Exterior Door Hardware	As required	As required	Fully weatherstripped.
C101001	Concrete Masonry Units	As required	As required	Provide Duraplex additive, or equal, to plaster veneer on interior face of Concrete Masonry Unit walls.
C101001	Metal Support Assemblies	As required	As required	Suspended and furred ceiling.
C102001	Standard Steel Doors and Frames	As required	3'-0" x 7'-0"	Steel Doors And Frames: Doors and frames shall be factory-primed and field-painted.
C102007	Interior Door Hardware	As required	As required	
C103004	Identifying Devices	As required	As required	Two identifying devices per door, one indicating stair and the other indicating floor level.
C201090	Stair Handrails, Guardrails, and Accessories	As required	As required	
C201001	Steel Stairs	As required	3'-0" x 7'-0"	
C302004	Floor Finishes	As required	As required	Rubber treads and risers.
C302007	Wall Base Finishes	As required	4" high	Rubber continuous.
C301002	Cement Plaster	As required	As required	To be applied to all exposed Concrete Masonry Unit (CMU) and concrete wall surfaces.
C303002	Impact-Resistant Gypsum Board	As required	As required	
C303003	Veneer Plaster Ceiling Finish System	As required	As required	
C304001	Interior Painting	As required	As required	
D30	Heating, Ventilating, and Air Conditioning (HVAC)	As required	As required	Heating, Ventilating, and Air Conditioning (HVAC) Systems: Provide pre-conditioned outside air, return, exhaust, and Variable Air Volume (VAV) supply for each Module.

D304001	Air Distribution, Heating, and Cooling	As required	As required	Variable Air Volume (VAV)-Series Fan-Powered Units: Provide with reheat, provide a minimum of four air changes per hour.
D309090	Heating, Ventilating, and Air Conditioning (HVAC)	As required	As required	Heating, Ventilating, and Air Conditioning (HVAC) System: Recover energy from exhaust air with total enthalpy heat wheel.
D304007	Exhaust Systems	As required	As required	Provide exhaust for outside air ventilation.
D3040	Air Distribution, Heating, and Cooling	As required	As required	Outside Air And Exhaust: Provide carbon dioxide demand-controlled ventilation per American Society of Heating, Refrigerating, and Air Conditioning Engineers (ASHRAE) 62.1.
D50	Electrical	As required	As required	See D50.

ELECTRICAL ROOM

Space Characteristics

Function / Adjacencies: Provides the necessary space to support the electrical needs of the facility.

Special Dimensions: Ideal Plan Dimensions: As required. Minimum ceiling height: 9'-0".

Acoustics: Not applicable.

Access: Provide direct access from exterior.

Number of Occupants: Not applicable.

Other / Special Requirements: Electrical Room shall be located on the First Floor. Provide other electrical spaces as necessary.

UniFormat Section	Description	Qty	Size	Specific Requirements
B203001	Steel Doors and Frames	As required	3'-0" x 7'-0"	Use exterior door and frame for access into Electrical Room at First Floor level. Provide solid doors fully-weatherstripped and thermally-insulated as required.
B203008	Exterior Door Hardware	As required	As required	Match Base standard hardware for access.
C101001	Concrete Masonry Units	As required	As required	
C102001	Standard Steel Doors and Frames	As required	As required	Use interior door if design permits access to Electrical Room located on second floor or above. Provide solid doors.
C102007	Interior Door Hardware	As required	As required	Use interior door hardware if Electrical Room is accessed through an interior door.
C103004	Identifying Devices	As required	As required	
C302007	Wall Base Finishes	Linear feet	4" high	Rubber.
C302010	Hardened and Sealed Cure Concrete Floors	As required	As required	
D203003	Floor Drains	As required	As required	Provide with trap primers.
D304007	Exhaust and Make-Up Air	As required	As required	Provide exhaust or supply air and make-up as required in Section D30.
D302004	Auxiliary Heating	As required	As required	Provide heating for Electrical Room.

MECHANICAL ROOM

Space Characteristics

Function / Adjacencies: Provides the necessary space to support the mechanical needs of the facility.

Special Dimensions: Ideal Plan Dimensions: As required. Minimum ceiling height: 9'-0".

Acoustics: Provide sound and vibration isolation from all occupied spaces.

Access: Mechanical spaces accessed from exterior.

Number of Occupants: Not applicable.

Other / Special Requirements: Mechanical Room shall be located on the First Floor. Provide other mechanical spaces as necessary.

UniFormat Section	Description	Qty	Size	Specific Requirements
B203001	Steel Doors and Frames	As required	6'-0" x 7'-0"	Use double exterior door and frame for access into Mechanical Room at First Floor level. Provide solid doors fully-weatherstripped and thermally-insulated as required.
B203008	Exterior Door Hardware	As required	As required	Match Base standard hardware for access.
C101001	Concrete Masonry Units	As required	As required	
C102001	Standard Steel Doors and Frames	As required	As required	Use interior door if design permits. Access to Mechanical Room located on second floor or above. Sound isolation shall have a Sound Transmission Class (STC) rating of at least 41.
C102007	Interior Door Hardware	As required	As required	Use interior door hardware if Mechanical Room is accessed through an interior door. Sound isolation shall have a Sound Transmission Class (STC) rating of at least 41.
C103004	Identifying Devices	As required	As required	
C302007	Wall Base Finishes	Linear feet	4" high	Rubber.
C302010	Hardened and Sealed Cured Concrete Floors	As required	As required	
C304001	Interior Painting	As required	As required	
D203003	Floor Drains	As required	As required	Provide with trap primers.
D304007	Exhaust and Make-Up Air	As required	As required	Provide exhaust or supply air and make-up as required in Section D30.
D305002	Auxiliary Heating	As required	As required	Provide heating for Mechanical Room.

AUXILIARY MECHANICAL ROOM

Space Characteristics

Function / Adjacencies: Provides the necessary space to support the mechanical needs of the facility.

Special Dimensions: Ideal Plan Dimensions: As required. Minimum ceiling height: 9'-0".

Acoustics: Provide sound and vibration isolation from all occupied spaces.

Access: Provide access from interior stairway through double-wide doors.

Number of Occupants: Not applicable.

Other / Special Requirements: Room shall be located in attic space above Multi-Purpose Room. Provide other mechanical spaces as necessary.

UniFormat Section	Description	Qty	Size	Specific Requirements
C101001	Metal Support Assemblies	As required	As required	
C102001	Standard Steel Doors and Frames	As required	As required	Sound isolation shall have a Sound Transmission Class (STC) rating of at least 41.
C102007	Interior Door Hardware	As required	As required	Sound isolation shall have a Sound Transmission Class (STC) rating of at least 41.
C103004	Identifying Devices	As required	As required	
C302007	Wall Base Finishes	Linear feet	4" high	Rubber.
C302010	Hardened and Sealed Cured Concrete Floors	As required	As required	
C304001	Interior Painting	As required	As required	
D203003	Floor Drains	As required	As required	Provide with trap primers.
D304007	Exhaust and Make-Up Air	As required	As required	Provide exhaust or supply air and make-up as required in Section D30.
D305002	Auxiliary Heating	As required	As required	Provide heating for Auxiliary Mechanical Room.

STEAM ROOM

Space Characteristics

Function / Adjacencies: Provides the necessary space to support the mechanical needs of the facility.

Special Dimensions: Ideal Plan Dimensions: As required. Minimum ceiling height: 9'-0".

Acoustics: Provide sound and vibration isolation from all occupied spaces.

Access: Mechanical spaces accessed from exterior.

Number of Occupants: Not applicable.

Other / Special Requirements: Room shall be located on the First Floor. Provide other mechanical spaces as necessary.

UniFormat Section	Description	Qty	Size	Specific Requirements
B203001	Steel Doors and Frames	As required	6'-0" x 7'-0"	Use double exterior door and frame for access into Steam Room at First Floor level. Provide solid doors fully-weatherstripped and thermally-insulated as required.
B203008	Exterior Door Hardware	As required	As required	Match Base standard hardware for access.
C101001	Concrete Masonry Units	As required	As required	
C102001	Standard Steel Doors and Frames	As required	As required	Use interior door if design permits access to Steam Room located on second floor or above. Sound isolation shall have a Sound Transmission Class (STC) rating of at least 41.
C102007	Interior Door Hardware	As required	As required	Use interior door hardware if Steam Room is accessed through an interior door. Sound isolation shall have a Sound Transmission Class (STC) rating of at least 41.
C103004	Identifying Devices	As required	As required	
C302007	Wall Base Finishes	Linear feet	4" high	Rubber.
C302010	Hardened and Sealed Cured Concrete Floors	As required	As required	
C304001	Interior Painting	As required	As required	
D203003	Floor Drains	As required	As required	Provide with trap primers.
D304007	Exhaust and Make-Up Air	As required	As required	Provide exhaust or supply air and make-up as required in Section D30.
D305002	Auxiliary Heating	As required	As required	Provide heating for Steam Room.

ELEVATOR MACHINE ROOM

Space Characteristics

Function / Adjacencies: Provides support space for elevator needs. Adjacent to Elevator on First Floor.

Special Dimensions: Ideal Plan Dimensions: As required. Minimum ceiling height: 9'-0".

Acoustics: Not applicable.

Access: Accessed from the exterior or from the Interior Corridor. Locate on the First Floor.

Number of Occupants: Not applicable.

Other / Special Requirements: Meet "ITG NAVFAC Elevator Design Guide (2001)". Traction elevators shall have a separate dedicated machine room.

UniFormat Section	Description	Qty	Size	Specific Requirements
B203001	Steel Doors and Frames	As required	3'-0" x 7'-0"	Use exterior door and frame if design permits access to the Elevator Machine Room from the exterior. Provide solid doors fully-weatherstripped and thermally-insulated as required.
B203008	Exterior Door Hardware	As required	As required	Use exterior door hardware if Elevator Machine Room is accessed through exterior door. Match Base standard hardware for access.
C101001	Concrete Masonry Units	As required	As required	
C102001	Standard Steel Doors and Frames	As required	As required	Use interior door if design permits access to the Elevator Machine Room from the interior. Provide solid doors.
C102007	Interior Door Hardware	As required	As required	Use interior door hardware if Elevator Machine Room is accessed through an interior door.
C103004	Identifying Devices	As required	As required	
C302007	Wall Base Finishes	Linear feet	4" high	Rubber.
C302010	Hardened and Sealed Cure Concrete Floors	As required	As required	
D304007	Exhaust Systems and Make-up Air	As required	As required	Provide pre-conditioned make-up air and exhaust for Elevator Machine Room.
D30	Heating, Ventilating, and Air Conditioning (HVAC)	As required	As required	Provide Heating, Ventilating, and Air Conditioning (HVAC) to elevator shaft and Elevator Machine Room. Provide air conditioning and ventilation to Elevator Machine Room. See American Society of Mechanical Engineers (ASME) A 17.1 (Rule 101.5).

TELECOMMUNICATIONS ROOM

Space Characteristics

Function / Adjacencies: Provides the necessary space to support the communications needs of the facility.

Special Dimensions: Ideal Plan Dimensions: Per Telecommunications Industry Association / Electronic Industries Alliance (TIA / EIA) standards. Minimum ceiling height: 9'-0".

Acoustics: Not applicable.

Access: Provide direct access from Interior Corridor.

Number of Occupants: Not applicable.

Other / Special Requirements: Telecommunications Room shall be located on the First Floor. Provide other telecommunication spaces as necessary.

UniFormat Section	Description	Qty	Size	Specific Requirements
C101001	Concrete Masonry Units	As required	As required	
C102001	Interior Doors	As required	6'-0" x 7'-0"	Wood doors and frames: If required, use interior doors and frames for Telecommunications Rooms accessed from the interior. Frames shall be factory-primed and field-painted.
C102007	Interior Door Hardware	As required	As required	Match Base standard hardware for access. Cipher Lock. Sound isolation shall have a Sound Transmission Class (STC) rating of at least 41.
C103004	Identifying Devices	As required	As required	Provide signage if accessed from interior. Coordinate room signage with the user.
C302007	Wall Base Finishes	As required	4" high	Wall Base Finishes: Rubber.
C302010	Flooring	As required	As required	Hardened and sealed cured concrete floors.
D303002	Heating, Ventilating, and Air Conditioning (HVAC)	As required	As required	Provide ductless heat pump.
D503001	Telecommunications Systems	As required	As required	Provide telecommunications equipment and distribution for "official" and "unofficial" voice / data systems. Install fire-rated ¾" plywood on side and rear wall.

FIRE PROTECTION / PUMP ROOM

Space Characteristics

Function / Adjacencies: Provides necessary space to support the fire protection needs of the facility.

Special Dimensions: Ideal Plan Dimensions: As required. Minimum ceiling height: 9'-0".

Acoustics: Not applicable.

Access: Provide direct access from exterior.

Number of Occupants: Not applicable.

Other / Special Requirements: Fire Protection / Pump Room shall be located on the First Floor. Provide other fire protection spaces as necessary.

UniFormat Section	Description	Qty	Size	Specific Requirements
B203001	Steel Doors and Frames	As required	3'-0" x 7'-0"	Provide solid doors fully-weatherstripped and thermally-insulated as required.
B203008	Exterior Door Hardware	As required	As required	Match Base standard hardware for access.
C101001	Concrete Masonry Units	As required	As required	
C103004	Identifying Devices	As required	As required	
C302007	Wall Base Finishes	As required	4" high	Wall Base Finishes: Rubber.
C302010	Hardened and Sealed Cure Concrete Floors	As required	As required	Hardened and sealed cured concrete floors.
D203003	Floor Drains	As required	As required	Provide with trap primers.
D304007	Exhaust and Make-Up Air	As required	As required	Provide exhaust or supply air and make-up as required in Section D30.
D305002	Heating	As required	As required	Provide heating for Fire Protection / Pump Room.
D501001	Electrical	As required	As required	See D50.

JANITOR CLOSET

Space Characteristics

Function / Adjacencies: Provides space for the cleaning and maintenance needs of the facility. Small room. Coordinate details and requirements with user.

Special Dimensions: Minimum ceiling height: 9'-0".

Acoustics: Not applicable.

Access: Accessed from the Interior Corridor, locate centrally on the Second, Third, and Fourth Floors of the building.

Number of Occupants: Not applicable.

Other / Special Requirements: Provide a janitor's sink and faucet. Finish floor, base, and wall around sink shall be water-resistant. Provide a motion-activated light sensor in each space.

UniFormat Section	Description	Qty	Size	Specific Requirements
C101001	Concrete Masonry Units	As required	As required	
C102001	Standard Steel Doors and Frames	As required	3'-0" x 7'-0"	Provide solid doors.
C102007	Interior Door Hardware	As required	As required	Match Base standard hardware for access. Sound isolation shall have a Sound Transmission Class (STC) rating of at least 41.
C103002	Toilet and Bath Accessories	As required	As required	Mop rack with hooks.
C103004	Identifying Devices	As required	As required	
C103006	Shelving	As required	As required	Floor-to-ceiling metal shelving with heavy-duty steel shelving supports installed on one wall.
C302010	Hardeners and Sealers	As required	As required	Hardened and sealed cured concrete floors.
C303002	Impact-Resistant Gypsum Board	As required	As required	
C302007	Wall Base Finishes	As required	4" high	Wall Base Finishes: Rubber.
C304001	Interior Painting	As required	As required	
C303005	Ceiling Suspension System	As required	As required	
D30	Heating, Ventilating, and Air Conditioning (HVAC)	As required	As required	Heating, Ventilating, and Air Conditioning (HVAC) Systems: Provide pre-conditioned outside air, return, exhaust, and Variable Air Volume (VAV) supply for each Module.
D3040	Air Distribution, Heating, and Cooling	As required	As required	Variable Air Volume (VAV)-Series Fan-Powered Units: Provide with reheat, provide a minimum of four air changes per hour.
D309090	Heating, Ventilating, and Air Conditioning (HVAC)	As required	As required	Heating, Ventilating, and Air Conditioning (HVAC) System: Recover energy from exhaust air with total enthalpy heat wheel.
D304007	Exhaust Systems	As required	As required	Provide exhaust for outside air ventilation.

D3040	Air Distribution, Heating, and Cooling	As required	As required	Outside Air And Exhaust: Provide carbon dioxide demand-controlled ventilation per American Society of Heating, Refrigerating, and Air Conditioning Engineers (ASHRAE) 62.1.
D201004	Sinks	As required	As required	Floor mop sinks.
D203003	Floor Drains	As required	As required	

JANITOR ROOM

Space Characteristics

Function / Adjacencies: Provides space for the cleaning and maintenance needs of the facility. May require a large room on the First Floor for material and equipment storage. Coordinate details and requirements with user.

Special Dimensions: Ideal Plan Dimensions: As required. Minimum ceiling height: 9'-0".

Acoustics: Not applicable.

Access: Accessed from the Interior Corridor. Locate centrally on the First Floor of the building.

Number of Occupants: Not applicable.

Other / Special Requirements: Provide a janitor sink and faucet. Finish floor, base, and wall around sink shall be water-resistant. Provide motion-activated light sensor.

UniFormat Section	Description	Qty	Size	Specific Requirements
C101001	Concrete Masonry Units	As required	As required	
C102001	Standard Steel Doors and Frames	As required	3'-0" x 7'-0"	Provide solid doors. Sound isolation shall have a Sound Transmission Class (STC) rating of at least 41.
C102007	Interior Door Hardware	As required	As required	Match Base standard hardware for access. Sound isolation shall have a Sound Transmission Class (STC) rating of at least 41.
C103002	Toilet and Bath Accessories	As required	As required	Mop rack with hooks.
C103004	Identifying Devices	As required	As required	
C103006	Shelving	As required	As required	Floor-to-ceiling metal shelving with heavy-duty steel shelving supports installed on one wall.
C302010	Hardeners and Sealers	As required	As required	Hardened and sealed cured concrete floors.
C303002	Impact-Resistant Gypsum Board	As required	As required	
C302007	Wall Base Finishes	As required	4" high	Wall Base Finishes: Rubber.
C303005	Ceiling Suspension System	As required	As required	
C304001	Interior Painting	As required	As required	
D201004	Sinks	As required	As required	Floor mop sinks.
D203003	Floor Drains	As required	As required	
D30	Heating, Ventilating, and Air Conditioning (HVAC)	As required	As required	Heating, Ventilating, and Air Conditioning (HVAC) Systems: Provide pre-conditioned outside air, return, exhaust, and Variable Air Volume (VAV) supply.
D304001	Air Distribution, Heating, and Cooling	As required	As required	Variable Air Volume (VAV)-Series Fan-Powered Units: Provide with reheat, provide a minimum of four air changes per hour.

D309090	Heating, Ventilating, and Air Conditioning (HVAC)	As required	As required	Heating, Ventilating, and Air Conditioning (HVAC) System: Recover energy from exhaust air with total enthalpy heat wheel.
D304007	Exhaust Systems	As required	As required	Provide exhaust for outside air ventilation.
D3040	Air Distribution, Heating, and Cooling	As required	As required	Outside Air And Exhaust: Provide carbon dioxide demand-controlled ventilation per American Society of Heating, Refrigerating, and Air Conditioning Engineers (ASHRAE) 62.1.

SMALL STORAGE ROOM

Space Characteristics

Function / Adjacencies: This space serves as a storage room for the upper floors of the facility. Coordinate details and requirements with user.

Special Dimensions: Ideal Plan Dimensions: As required. Minimum ceiling height: 9'-0".

Acoustics: Not applicable.

Access: Accessed from the Interior Corridor, locate centrally on the Second, Third, and Fourth Floors of the building.

Number of Occupants: Not applicable.

Other / Special Requirements: Not applicable.

UniFormat Section	Description	Qty	Size	Specific Requirements
C101001	Concrete Masonry Units	As required	As required	Provide Duraplex additive, or equal, to plaster veneer on interior face of Concrete Masonry Unit walls.
C102001	Standard Steel Doors and Frames	As required	3'-0" x 7'-0"	Factory-primed, field-painted solid core wood doors with stained finish and steel frames.
C102007	Interior Door Hardware	As required	As required	Match Base standard hardware for access.
C103004	Identifying Devices	As required	As required	
C103006	Shelving	As required	As required	Floor-to-ceiling metal shelving with heavy-duty steel shelving supports around all walls.
C302007	Wall Base Finishes	As required	4" high	Wall Base Finishes: Rubber.
C302010	Hardened and Sealed Cure Concrete Floors	As required	As required	
C303002	Regular Gypsum Board	As required	As required	
C304001	Interior Painting	As required	As required	
D30	Heating, Ventilating, and Air Conditioning (HVAC)	As required	As required	Heating, Ventilating, and Air Conditioning (HVAC) Systems: Provide pre-conditioned outside air, return, exhaust, and Variable Air Volume (VAV) supply for each room. Provide six air changes per hour.
D304001	Air Distribution, Heating, and Cooling	As required	As required	Variable Air Volume (VAV)-Series Fan-Powered Units: Provide with reheat, provide a minimum of six air changes per hour.
D309090	Heating, Ventilating, and Air Conditioning (HVAC)	As required	As required	Heating, Ventilating, and Air Conditioning (HVAC) System: Recover energy from exhaust air with total enthalpy heat wheel.
D304007	Exhaust Systems	As required	As required	Provide exhaust for outside air ventilation.
D3040	Air Distribution, Heating, and Cooling	As required	As required	Outside Air And Exhaust: Provide carbon dioxide demand-controlled ventilation per American Society of Heating, Refrigerating, and Air Conditioning Engineers (ASHRAE) 62.1.

BARRACKS MANAGER'S OFFICE / DUTY OFFICE CHECK-IN AREA

Space Characteristics

Function / Adjacencies:

Barracks Manager's Office: Provides staff with a secure office from which to manage the building and monitor the adjacent Duty Office Check-In Area.

Duty Office Check-In Area: A built-in desk and check-in duty counter open to the Interior Corridor. Office shall meet Architectural Barriers Act Accessibility Standards (ABAAS).

Special Dimensions:

Barracks Manager's Office: Sized to accommodate a desk with filing, desk chair, and markerboard.

Duty Office Check-In Area: Provide a built-in check-in desk and counter as required. Provide elevation options for a quality commercial design with architecturally-significant scale and design elements. Elements shall be included, but not limited to: decorative accent lighting, accent ceiling soffits, Architectural Barriers Act Accessibility Standards (ABAAS) section of desk, solid surfacing counter, and command identification boards. Minimum ceiling height: 9'-0".

Acoustics: Not applicable.

Access: Both areas shall be accessed directly from Entrance Lobby / Interior Corridor and in view of the front entry doors. Provide visible access to the Multi-Purpose Room, Laundry Room, and Entrance Vestibule.

Number of Occupants: Regularly-manned by one person.

Other / Special Requirements: Provide lighting, switches, and convenience outlets per code, regulation, and requirements. Coordinate with user. Navy / Marine Corps Intranet (NMCI) and telephone connections. Duty Office Check-In Area shall be a focal point of interest with dropped-down ceiling / recessed lighting and upgraded finishes.

UniFormat Section	Description	Qty	Size	Specific Requirements
B202001	Exterior Windows	As required	As required	
B202004	Insulating Glass Units	As required	As required	Low-Emissivity (Low-E) glazing or spectral glazing.
C101001	Concrete Masonry Units	As required	As required	Provide Duraplex additive, or equal, to plaster veneer on interior face of Concrete Masonry Unit walls. Ground-face Concrete Masonry Unit (CMU) as accent in Duty Office Check-In.
C101005	Aluminum Windows	As required	As required	Fixed windows.
C101007	Glass	As required	As required	
C102001	Interior Doors	As required	As required	Factory-primed, field-painted solid core wood doors with stained finish and steel frames.
C102007	Interior Door Hardware	As required	As required	Provide multi-functional locking device to include card swiping and key override. For entry door, provide hold-open / closure device and peephole.
C103003	Marker Boards and Tack Boards	1 each	5'-0" x 3'-0"	Markerboard.
C103004	Identifying Devices	As required	As required	Locate on Interior Corridor side entry door.
C103008	Counters	As required	As required	Solid Surfacing Material: Provide solid-surfacing countertop and desk surface. Counter design should include an accessible height surface as well as a standing height transaction counter.

C103010	Casework	As required	As required	Built-In Desk / Check-In: Built-in desk with chair space underneath and pencil drawer with file storage to either side. Provide tackable surface on inside of standing height area. Exterior face of casework shall be solid surfacing or equivalent durable material.
C301002	Cement Plaster	As required	As required	To be applied to all exposed Concrete Masonry Unit (CMU) and concrete wall surfaces.
C302002	Floor Finishes	As required	As required	Cementitious terrazzo floor finish. Incorporate two accent colors in the Duty Office Check-In Area.
C302002	Wall Base Finishes	As required	4” high	Terrazzo.
C303001	Acoustical Ceiling Panels	As required	See specific requirements	2’-0” x 2’-0” tegular edge.
C303002	Gypsum Wallboard Ceiling Finishes	As required	As required	Variation in ceiling height above reception desk. Incorporate accent lighting.
C303005	Ceiling Suspension System	As required	As required	
C304001	Interior Painting	As required	As required	Accent color in this area to add interest.
D30	Heating, Ventilating, and Air Conditioning (HVAC)	As required	As required	Heating, Ventilating, and Air Conditioning (HVAC) Systems: Provide pre-conditioned outside air, return, exhaust, and Variable Air Volume (VAV) supply for each Module.
D304001	Air Distribution, Heating, and Cooling	As required	As required	Variable Air Volume (VAV)-Series Fan-Powered Units: Provide with reheat, provide a minimum of four air changes per hour.
D309090	Heating, Ventilating, and Air Conditioning (HVAC)	As required	As required	Heating, Ventilating, and Air Conditioning (HVAC) System: Recover energy from exhaust air with total enthalpy heat wheel.
D304007	Exhaust Systems	As required	As required	Provide exhaust for outside air ventilation.
D3040	Air Distribution, Heating, and Cooling	As required	As required	Outside Air And Exhaust: Provide carbon dioxide demand-controlled ventilation per American Society of Heating, Refrigerating, and Air Conditioning Engineers (ASHRAE) 62.1.
D503001	Telecommunications Systems	See specific requirements	As required	Provide telecommunication outlets. Each outlet shall have two 8-pin RJ-45 Registered Jacks. Provide two outlets on each opposing side wall.
D50	Electrical	As required	As required	See D50. Incorporate power in Duty Office Check-In as needed.

DUTY BUNK ROOM

Space Characteristics

Function / Adjacencies: Provides duty staff with a bunk room to support 24-hour operations. Adjacent to Barracks Manager's Office.

Special Dimensions: Ideal Plan Dimensions: Room sized for a single bunk, nightstand, and wardrobe unit. Space shall meet Architectural Barriers Act Accessibility Standards (ABAAS). Minimum ceiling height: 9'-0".

Acoustics: Perimeter room walls shall have a Sound Transmission Class (STC) rating of at least 55. Floors and ceiling assemblies shall have an STC rating of at least 55 and an Impact Isolation Class (IIC) of 60. Entry room door shall have a minimum STC rating of 41.

Access: Access directly from Barracks Manager's Office.

Number of Occupants: 1.

Other / Special Requirements: Provide lighting, switches, and convenience outlets per code, regulation, and requirements. Coordinate with user.

UniFormat Section	Description	Qty	Size	Specific Requirements
B202001	Exterior Windows	As required	As required	
B202004	Insulating Glass Units	As required	As required	Low-Emissivity (Low-E) glazing or spectral glazing.
C101001	Concrete Masonry Units	As required	As required	Provide Duraplex additive, or equal, to plaster veneer on interior face of Concrete Masonry Unit walls.
C102001	Standard Doors and Frames	As required	As required	Factory-primed, field-painted solid core wood doors with stained finish and steel frames.
C102007	Interior Door Hardware	As required	As required	Provide multi-functional locking device to include card swiping and key override. Provide hold open / closure device and peephole.
C103003	Marker Boards and Tack Boards	1 each	5'-0" x 3'-0"	
C302002	Floor Finishes	As required	As required	Cementitious terrazzo floor finish.
C302002	Wall Base Finishes	As required	4" high	Terrazzo.
C301002	Cement Plaster	As required	As required	To be applied to all exposed Concrete Masonry Unit (CMU) and concrete wall surfaces.
C303002	Regular Gypsum Board	As required	As required	
C303005	Ceiling Suspension System	As required	As required	
C304001	Interior Painting	As required	As required	
D30	Heating, Ventilating, and Air Conditioning (HVAC)	As required	As required	Heating, Ventilating, and Air Conditioning (HVAC) Systems: Provide pre-conditioned outside air, return, exhaust, and Variable Air Volume (VAV) supply.
D304001	Air Distribution, Heating, and Cooling	As required	As required	Variable Air Volume (VAV)-Series Fan-Powered Units: Provide with reheat, provide a minimum of four air changes per hour.
D309090	Heating, Ventilating, and Air Conditioning (HVAC)	As required	As required	Heating, Ventilating, and Air Conditioning (HVAC) System: Recover energy from exhaust air with total enthalpy heat wheel.

D304007	Exhaust Systems	As required	As required	Provide exhaust for outside air ventilation.
D3040	Air Distribution, Heating, and Cooling	As required	As required	Outside Air And Exhaust: Provide carbon dioxide demand-controlled ventilation per American Society of Heating, Refrigerating, and Air Conditioning Engineers (ASHRAE) 62.1.
D503006	Television Systems	1 each	As required	Cable Television: Provide one Cable Television (CATV) outlet. Mounting height shall be determined. Provide articulating wall mount for television. Television shall be Furniture, Fixtures, and Equipment (FF&E).
E201002	Window Treatments	As required	As required	Manually-operated, light-filtering solar shades with 3% openness.

DUTY HEAD

Space Characteristics

Function / Adjacencies: Provides a private toilet and sink for duty staff.

Special Dimensions: Ideal Plan Dimensions: Space shall meet Architectural Barriers Act Accessibility Standards (ABAAS). Minimum ceiling height: 9'-0".

Acoustics: Not applicable.

Access: Accessed directly from Barracks Manager's Office and Duty Bunk Room.

Number of Occupants: 1.

Other / Special Requirements: Not applicable.

UniFormat Section	Description	Qty	Size	Specific Requirements
C101001	Concrete Masonry Units	As required	As required	Provide Duraplex additive, or equal, to plaster veneer on interior face of Concrete Masonry Unit walls.
C102001	Standard Steel Doors and Frames	1 each	3'-0" x 7'-0"	Provide interior solid door. Sound isolation shall have a Sound Transmission Class (STC) rating of at least 41.
C102007	Interior Door Hardware	As required	As required	Sound isolation shall have a Sound Transmission Class (STC) rating of at least 41.
C103002	Toilet and Bath Accessories	As required	See specific requirements	Toilet tissue dispenser and framed wall mirror same length as counter. Coat hook on the door.
C103008	Counters	As required	Square feet	½" solid surfacing material with a solid wood substrate. Provide 4"-high solid-surfacing back and side splash behind Head countertop.
C301004	Tile and Terrazzo Wall Finishes	As required	10" x 10" Minimum	Porcelain Tile Wall Wainscot: Height 4'-0" Above Finished Floor (AFF) with coordinating accent border.
C302001	Tile Floor Finishes	As required	10" x 10" Minimum	Porcelain Tile: Provide porcelain tile finish floors and wall base. Epoxy grout shall be used.
C301002	Cement Plaster	As required	As required	To be applied to all exposed Concrete Masonry Unit (CMU) and concrete wall surfaces.
C303002	Moisture-Resistant Gypsum Board	As required	As required	
C304001	Interior Painting	As required	As required	Painted gypsum board ceiling.
D201001	Water Closet	1 each	As required	Dual-flush-valve type water Closets.
D201003	Lavatories	1 each	As required	½" solid surfacing countertop lavatories in Heads shall have under-mounted solid-surfacing sinks integral to the countertop.
D304007	Exhaust Systems	As required	As required	Fan separately-switched from light fixture. All exhaust from Heads, Heads, and Heads shall be centralized and energy reclaimed through heat wheel. Exhaust and ventilation shall meet North Carolina Mechanical Code and American Society of Heating, Refrigerating, and Air Conditioning Engineers (ASHRAE) 62.
D30	Heating, Ventilating, and Air Conditioning (HVAC)	As required	As required	Heating, Ventilating, and Air Conditioning (HVAC) Systems: Provide pre-conditioned outside air, return, exhaust, and Variable Air Volume (VAV) supply for each Module.

D304001	Air Distribution, Heating, and Cooling	As required	As required	Variable Air Volume (VAV)-Series Fan-Powered Units: Provide with reheat, provide a minimum of four air changes per hour.
D309090	Heating, Ventilating, and Air Conditioning (HVAC)	As required	As required	Heating, Ventilating, and Air Conditioning (HVAC) System: Recover energy from exhaust air with total enthalpy heat wheel.
D304007	Exhaust Systems	As required	As required	Provide exhaust for outside air ventilation.
D3040	Air Distribution, Heating, and Cooling	As required	As required	Outside Air And Exhaust: Provide carbon dioxide demand-controlled ventilation per American Society of Heating, Refrigerating, and Air Conditioning Engineers (ASHRAE) 62.1.

LINEN STORAGE ROOM

Space Characteristics

Function / Adjacencies: Provide storage for linens.

Special Dimensions: Ideal Plan Dimensions: As required. Minimum ceiling height: 9'-0".

Acoustics: Not applicable.

Access: Access directly from Barracks Manager's Office. Locate near the Duty Office Check-In Area.

Number of Occupants: Not applicable.

Other / Special Requirements: Shelving for linens.

UniFormat Section	Description	Qty	Size	Specific Requirements
C101001	Concrete Masonry Units	As required	As required	Provide Duraplex additive, or equal, to plaster veneer on interior face of Concrete Masonry Unit walls.
C102001	Standard Doors and Frames	1 each	3'-0" x 7'-0"	Factory-primed, field-painted solid core wood doors with stained finish and steel frames.
C102007	Interior Door Hardware	As required	As required	
C103004	Identifying Devices	1 each	As required	
C103006	Shelving	As required	As required	Floor-to-ceiling metal shelving with heavy-duty steel shelving supports on three walls.
C302002	Floor Finishes	As required	As required	Cementitious terrazzo floor finish.
C302002	Wall Base Finishes	As required	4" high	Terrazzo.
C303002	Regular Gypsum Board	As required	As required	
C304001	Interior Painting	As required	As required	
D30	Heating, Ventilating, and Air Conditioning (HVAC)	As required	As required	Heating, Ventilating, and Air Conditioning (HVAC) Systems: Provide pre-conditioned outside air, return, exhaust, and Variable Air Volume (VAV) supply for each Module.
D304001	Air Distribution, Heating, and Cooling	As required	As required	Variable Air Volume (VAV)-Series Fan-Powered Units: Provide with reheat, provide a minimum of four air changes per hour.
D309090	Heating, Ventilating, and Air Conditioning (HVAC)	As required	As required	Heating, Ventilating, and Air Conditioning (HVAC) System: Recover energy from exhaust air with total enthalpy heat wheel.
D304007	Exhaust Systems	As required	As required	Provide exhaust for outside air ventilation.
D3040	Air Distribution, Heating, and Cooling	As required	As required	Outside Air And Exhaust: Provide carbon dioxide demand-controlled ventilation per American Society of Heating, Refrigerating, and Air Conditioning Engineers (ASHRAE) 62.1.

DOUBLE-OCCUPANCY UNIT

Space Characteristics

Function / Adjacencies: This space serves as the primary living and sleeping area for residents. Standard Double-Occupancy Unit must accommodate two extra-long twin beds, two desks with overhead storage with task light, two desk chairs, and at least one dresser with a minimum of two drawers and at least one night stand. All furniture provided shall be based on Base property whole-room concept specifications.

Special Dimensions: Refer to Part 3, Chapter 4.4 “Space Allocation”, and Part 6 “Attachments” of this RFP for required room layout.

Acoustics: Perimeter room walls shall have a Sound Transmission Class (STC) rating of at least 55. Floors and ceiling assemblies shall have a Sound Transmission Class (STC) rating of at least 55 and an IIC (Impact Isolation Class) of 60.

Access: Access to individual rooms shall be from the Interior Corridor. Closet Access: In order to optimize storage space within personal Closets, doors accessing each Closet shall swing out into the Service Area, not into the Closets.

Number of Occupants: Two per room.

Ceiling Heights: Minimum 8’-0” at Service Area and Heads. Ceiling height in Closets shall be a minimum 10’-0”. Bedrooms shall be to underside of above floor construction.

Other / Special Requirements: Provide continuous ventilation in Closets to resist mold and mildew growth. Provide Light-Emitting Diode light fixtures, with residential-feel and maximum-controllability. Provide two-door, Energy Star-rated 10.3 cubic foot refrigerator.

UniFormat Section	Description	Qty	Size	Specific Requirements
B202001	Exterior Windows	As required	As required	Anti-Terrorism / Force Protection (Anti-Terrorism / Force Protection (ATFP)). Provide solid surfacing sills. Provide two windows on both sides of a center vertical structural support for each Sleeping Room.
B202004	Insulating Glass Units	As required	As required	Low-Emissivity (Low-E) glazing or spectral glazing.
C101001	Concrete Masonry Units	As required	As required	Provide Duraplex additive, or equal, to plaster veneer on interior face of Concrete Masonry Unit walls.
C102001	Standard Doors and Frames	1 each	3’-0” x 7’-0”	Solid-core factory-primed and painted wood door with peephole for interior door accessing main Interior Corridor. Sound isolation shall have a Sound Transmission Class (STC) rating of at least 41. Provide steel frame.
C102001	Wood Doors	As required	2’-8” x 7’-0”	Provide solid-core wood doors in metal frames at Closets and Head. To maximize storage space, Closets doors shall swing out into unit Service Area, not into Closets. Provide door width as required in accordance with Architectural Barriers Act Accessibility Standards (ABAAS).
C102007	Interior Door Hardware	As required	As required	Provide master key unlocking and battery-operated Access Control System (ACS) (magnetic swipe reader) for room entry. In addition to standard door hardware, provide Closets with non-removable pin hinges, locking hardware, and hasp lock. For Handicap “Lite”-Accessible Units, provide Architectural Barriers Act Accessibility Standards (ABAAS)-compliant hardware (e.g. lever door handles). For entry door, provide hold-open / closure device and multi-functional locking device to include card swiping and key override.
C103002	Toilet and Bath Accessories	See specific requirements	See specific requirements	Toilet tissue dispenser, framed mirror, two recessed mirror-less medicine cabinets, two towel bars, shower rod, solid surfacing shelf corner unit with two shelves, two solid surfacing shower soap holders, four robe hooks, full-length mirror on Head door. Mirror over sink shall be a minimum of 30” x 36”. Provide Architectural Barriers Act Accessibility Standards (ABAAS)-compliant accessories set at required heights / locations at Handicap “Lite”-accessible rooms.

C103004	Identifying Devices	1 each	As required	Located on Interior Corridor side of room entry door. Provide a horizontal wall-mounted 8.5" x 11" frame with sign inserts that are tamper-resistant. Occupant identification inserts shall be removable with a suction cup. Provide room numbers on doors.
C103006	Shelving	See specific requirements	See specific requirements	1" minimum thick high-pressure laminate-covered plywood shelves with heavy-duty steel shelving supports. Provide shelf with heavy duty hanging rods for full length and short garments on one wall. Closet shelving shall extend from floor to ceiling on adjacent wall (minimum of six shelves). Provide additional shelf above Closets door for bulk storage.
C103008	Counters	As required	See specific requirements	½" solid surfacing material with a solid wood substrate. Provide 4"-high solid-surfacing back and side splash behind Head countertop and Service Area sink. For handicap-accessible rooms, make counter height typical of other rooms. Coordinate specific requirements with user.
C103009	Cabinets	As required	As required	Wall And Base Cabinets: Provide base cabinet (laminate over plywood construction) under Head counter at sinks for storage. Provide full-height cabinet between sinks with four doors, adjustable shelves above counter, and four drawers below. Provide base and wall cabinets (laminate over plywood construction) in Service Area. Design the base cabinet in the Service Area per attachment in Part 6 of this RFP. Overhead wall-mounted cabinets shall be full-width of the Service Area. Contractor shall coordinate actual design / equipment / layout details with user. For handicap-accessible rooms, coordinate specific requirements with user.
C103090	Other Interior Specialties Ceiling-Mounted Fan	As required	As required	Operated by wall switch. Ceiling fan light kits are prohibited. Ceiling fan shall have a neutral painted finish. Ceiling fan shall be securely-mounted per manufacturer's installation instructions. For handicap-accessible rooms, provide Architectural Barriers Act Accessibility Standards (ABAAS)-compliant details / layout (e.g. mounting height and location of control switch). Coordinate specific requirements with user.
C103090	Other Interior Specialties	1 each	As required	Full-length mirror on Head door.
C301002	Cement Plaster	As required	As required	To be applied to all exposed Concrete Masonry Unit (CMU) and concrete wall surfaces.
C301004	Tile and Terrazzo Wall Finishes	As required	8" x 8" Minimum	Provide full-height porcelain tile with coordinating border accent in Heads.
C302001	Epoxy Grout	As required	As required	To be used on all tiled surfaces.
C302001	Tile Floor Finishes	As required	8" x 8" Minimum	Provide porcelain tile finish floors and wall base in Head area.
C302004	Resilient Floor Finishes	As required	4" x 3'-0" planks	Solid Vinyl Plank Flooring System: Wood-look finish in Sleeping Room, Service Area corridor, and Closets.
C302007	Wall Base Finishes	As required	4" high	Provide rubber wall base on all walls with the exception of Head walls. Bathroom walls shall receive porcelain tile base.
C303002	Gypsum Wallboard and Cementitious Backer Unit Ceiling Finishes	As required	As required	Gypsum board ceilings above Service Area, Closets, and Head. Ceiling in Head shall be water-resistant gypsum board. Provide cementitious backer unit in shower.
C303003	Veneer Plaster Ceiling Finish System	As required	As required	

C304001	Interior Painting	See specific requirements	As required	Include one painted accent wall per room.
D30	Heating, Ventilating, and Air Conditioning (HVAC)	As required	As required	Provide pre-conditioned outside air, return, exhaust, and Variable Air Volume (VAV) supply for each Module.
D304001	Air Distribution, Heating, and Cooling	As required	As required	Variable Air Volume (VAV)-Series Fan-Powered Units: Provide with reheat, provide a minimum of four air changes per hour.
D309090	Heating, Ventilating, and Air Conditioning (HVAC)	As required	As required	Recover energy from exhaust air with total enthalpy heat wheel.
D304007	Exhaust Systems	As required	As required	Provide exhaust for Head for outside air ventilation.
D3040	Air Distribution, Heating, and Cooling	As required	As required	Outside Air And Exhaust: Provide carbon dioxide demand-controlled ventilation per American Society of Heating, Refrigerating, and Air Conditioning Engineers (ASHRAE) 62.1.
D201001	Water Closets	1 each	As required	Flush Valve Type Water Closets: For handicap-accessible rooms, provide Architectural Barriers Act Accessibility Standards (ABAAS)-compliant details/layout (e.g. grab bars). Coordinate specific requirements with user.
D201003	Lavatories	1 each	As required	½" solid surfacing countertop lavatories in Heads shall be under-mounted solid-surfacing sinks integral to the countertop. Provide gooseneck faucet at lavatory. Coordinate specific requirements with user.
D201004	Sinks	1 each	See specific requirements	Countertop Kitchen Sinks: Single-compartment, stainless steel, under-mount unit (14" wide x minimum 8" deep). Provide gooseneck style faucet at sink.
D201005	Showers / Tubs	1 each	As required	Supply Fittings: Shower head shall be immobile and positioned to spray away from shower opening. For Handicap "Lite"-accessible rooms, use regular shower head, provide grab bars. Coordinate specific requirements with user.
D201005	Showers / Tubs	1 each	3'-0" x 3'-0"	Solid Surfacing Shower Floor Receptor: Minimum thickness ½ inch throughout and ¾-inch in a 12-inch diameter area at drain. Coordinate specific requirements with user.
D201005	Showers / Tubs	As required	As required	Solid Surfacing Shower Surround: Provide a ¼" minimum thickness solid surfacing surround extending from top of shower floor receptor to ceiling. Provide cementitious backer unit behind shower surround.
D203003	Floor Drains	1 each	As required	Shower floor.
D502001	Lighting and Branch Wiring	See specific requirements	As required	Provide Dedicated Circuits And Connections For The Following Special Outlets: In the Sleeping Room, provide four 20-ampere quadraplex receptacles on two dedicated 20-ampere circuits. In the Service Area, provide three receptacles: one dedicated 20-ampere appliance circuit and Ground-Fault Circuit Interrupter (GFCI) receptacle above the counter for the microwave oven, one dedicated 20-ampere appliance circuit and receptacle for the refrigerator, and one dedicated 20-ampere circuit and Ground-Fault Circuit Interrupter (GFCI) receptacle at countertop height. Provide a 20-ampere Ground-Fault Circuit Interrupter (GFCI) receptacle on a dedicated 20-ampere circuit in the Head. Coordinate specific requirements with user.

D502002	Lighting Equipment	As required	As required	Provide general lighting throughout the individual room plan to achieve average maintained illumination of 30 foot-candles. Lighting shall coordinate with the Structural Interior Design (SID) package and shall be installed to limit “strobe effect” caused by ceiling fan. Provide valance lighting over Head lavatory. Valance lighting may be integral to the two medicine cabinets. Provide lighting in each Closet and Head with motion-activated switch. Provide one dimmable switch on each side of the Sleeping Room.
D503001	Telecommunications Systems	See specific requirements	As required	Provide telecommunication outlets. Each outlet shall have two 8-pin RJ-45 Registered Jacks with conduit. Provide two outlets on each opposing side wall.
D503006	Television Systems	See specific requirements	As required	Provide one Cable Television (CATV) outlet on each opposing side wall.
E201002	Window Treatments	As required	As required	Manually-operated, light-filtering solar shades with 3% openness.
E202090	Other Movable Furnishings	2 each	As required	Provide wall-mounted iron organizer inside each Closet to store ironing board and iron.

HANDICAP "LITE"-ACCESSIBLE UNIT

Space Characteristics

Function / Adjacencies: This space serves as the primary living and sleeping area for residents. This unit serves as a single-occupancy handicap-accessible room, and shall be located on the First Floor.

Special Dimensions: Refer to Part 3, Chapter 4.4 "Space Allocation", and Part 6 "Attachments" of this RFP for required room layout.

Acoustics: Perimeter room walls shall have a Sound Transmission Class (STC) rating of at least 55. Floor and ceiling assemblies shall have a Sound Transmission Class (STC) rating of 55 and an IIC (Impact Isolation Class) of 60.

Access: Access to unit directly from the First Floor Interior Corridor. Provide access clearances, lever door handles, grab bars in Heads, and other amenities and provisions in compliance with Architectural Barriers Act Accessibility Standards (ABAAS).

Number of Occupants: 1.

Ceiling Heights: Minimum 8'-0" at Service Area and Heads. Ceiling height in Closets shall be a minimum 10'-0". Bedrooms shall be to underside of above floor construction.

Other / Special Requirements: Provide two units on the First Floor of each Bachelor Enlisted Quarters (BEQ)), location requirements as described in Section 4.2; furniture shall be the same as the standard Double-Occupancy Unit. Wheelchair turnaround areas are not required in the Sleeping Room and Head since wheelchair-bound occupants will not be housed in this Bachelor Enlisted Quarters (BEQ). Provide Light-Emitting Diode light fixtures, with residential-feel and maximum-controllability. Provide two-door, Energy Star-rated 10.3 cubic foot refrigerator.

UniFormat Section	Description	Qty	Size	Specific Requirements
B202001	Exterior Windows	As required	As required	Anti-Terrorism / Force Protection (Anti-Terrorism / Force Protection (ATFP)). Provide solid surfacing sills. Provide two windows on both sides of a center vertical structural support for each Sleeping Room.
B202004	Insulating Glass Units	As required	As required	Low-Emissivity (Low-E) glazing or spectral glazing.
C101001	Concrete Masonry Units	As required	As required	Provide Duraplex additive, or equal, to plaster veneer on interior face of Concrete Masonry Unit walls.
C102001	Standard Doors and Frames	1 each	3'-0" x 7'-0"	Solid-core factory-primed and painted wood door with peephole for interior door accessing main Interior Corridor. Sound isolation shall have a Sound Transmission Class (STC) rating of at least 41. Provide steel frame.
C102001	Wood Doors	As required	As required	Provide solid-core wood doors in metal frames at Closets and Head. To maximize storage space, Closets doors shall swing out into unit Service Area, not into Closets. Provide door width as required in accordance with Architectural Barriers Act Accessibility Standards (ABAAS).
C102007	Interior Door Hardware	As required	As required	Provide master key unlocking and battery-operated Access Control System (ACS) (magnetic swipe reader) for room entry. In addition to standard door hardware, provide Closets with non-removable pin hinges, locking hardware, and hasp lock. For "Handicap Lite" accessible rooms, provide Architectural Barriers Act Accessibility Standards (ABAAS)-compliant hardware (e.g. lever door handles). For entry door, provide hold-open / closure device and multi-functional locking device to include card swiping and key override.
C103002	Toilet and Bath Accessories	See specific requirements	As required	Toilet tissue dispenser, two framed recessed medicine cabinets, two towel bars, shower rod, two solid-surfacing shower soap holders, two solid-surfacing shower shelves, four robe hooks, and full-length mirror. For handicap-accessible rooms, provide Architectural Barriers Act Accessibility Standards (ABAAS)-compliant accessories set at required heights / locations.

C103004	Identifying Devices	1 each	As required	Located on Interior Corridor side of room entry door. Provide a horizontal wall-mounted 8.5" x 11" frame with sign inserts that are tamper-resistant. Occupant identification inserts shall be removable with a suction cup. Provide room numbers on doors.
C103006	Shelving	See specific requirements	See specific requirements	1" minimum thick high-pressure laminate-covered plywood shelves with heavy-duty steel shelving supports. Provide shelf with heavy duty hanging rods for full-length and short garments on one wall. Closet shelving shall extend from floor to ceiling on adjacent wall (minimum six shelves). Provide additional shelf above Closets door for bulk storage.
C103008	Counters	As required	See specific requirements	½" solid surfacing material with a solid wood substrate. Provide 4"-high solid-surfacing back and side splash behind Head countertop. Provide full-height solid-surfacing back and side splash up to underside of wall-mounted cabinets behind Service Area sink. For handicap-accessible rooms, provide Architectural Barriers Act Accessibility Standards (ABAAS)-compliant details / layout. Coordinate specific requirements with user.
C103009	Cabinets	As required	As required	Wall And Base Cabinets: Provide base cabinet (laminate over plywood construction) under Head counter at sinks for storage. Provide full-height cabinet between sinks with doors, four adjustable shelves above counter and four drawers below storage. Provide base and wall cabinets (laminate over plywood construction) in Service Area. Design of the base cabinet in the Service Area should leave space for a refrigerator and microwave, per Bachelor Enlisted Quarters (BEQ) room template in Part 6. Overhead wall-mounted cabinets shall be full-width of the service alcove and include mirror behind alcove sink. Contractor shall coordinate actual design / equipment / layout details with user. For handicap-accessible rooms, coordinate specific requirements with user.
C103090	Other Interior Specialties Ceiling-Mounted Fan	1 each	As required	Operated by wall switch. Ceiling fan light kits are prohibited. Ceiling fan shall have a neutral painted finish. Ceiling fan shall be securely-mounted per manufacturer's installation instructions. For handicap-accessible rooms, provide Architectural Barriers Act Accessibility Standards (ABAAS)-compliant details / layout (e.g. mounting height and location of control switch). Coordinate specific requirements with user.
C301002	Cement Plaster	As required	As required	To be applied to all exposed Concrete Masonry Unit (CMU) and concrete wall surfaces.
C301003	Gypsum Wallboard Finishes	As required	As required	Impact-resistant gypsum wallboard used for metal stud partition construction at chase locations.
C301004	Tile and Terrazzo Wall Finishes	As required	8" x 8" Minimum	Provide full-height porcelain tile with coordinating border accent in Heads.
C302001	Tile Floor Finishes	As required	10" x 10" Minimum	Provide porcelain tile finish floors and wall base in Head area. Epoxy grout shall be used.
C302004	Resilient Floor Finishes	As required	6" x 3'-0" planks	Solid Vinyl Plank Flooring System: Wood-look finish in Sleeping Room, Service Area corridor, and Closets.
C302007	Wall Base Finishes	As required	4" high	Provide rubber wall base on all walls with the exception of Head walls. Bathroom walls receive porcelain tile base.
C303002	Gypsum Wallboard and Cementitious Backer Unit Ceiling Finishes	As required	As required	Gypsum board ceilings above Service Area, Closets, and Head. Ceiling in Head shall be water-resistant gypsum board. Cementitious backer unit in shower.

C303003	Veneer Plaster Ceiling Finish System	As required	As required	
C304001	Interior Painting	See specific requirements	As required	Include one painted accent wall per room.
D30	Heating, Ventilating, and Air Conditioning (HVAC)	As required	As required	Provide pre-conditioned outside air, return, exhaust, and Variable Air Volume (VAV) supply for each Module.
D304001	Air Distribution, Heating, and Cooling	As required	As required	Variable Air Volume (VAV)-Series Fan-Powered Units: Provide with reheat, provide a minimum of four air changes per hour.
D309090	Heating, Ventilating, and Air Conditioning (HVAC)	As required	As required	Recover energy from exhaust air with total enthalpy heat wheel.
D304007	Exhaust Systems	As required	As required	Provide exhaust for Head for outside air ventilation.
D3040	Air Distribution, Heating, and Cooling	As required	As required	Outside Air And Exhaust: Provide carbon dioxide demand-controlled ventilation per American Society of Heating, Refrigerating, and Air Conditioning Engineers (ASHRAE) 62.1.
D201001	Water Closets	1 each	As required	Flush Valve Type Water Closets: For handicap-accessible rooms, provide Architectural Barriers Act Accessibility Standards (ABAAS)-compliant details/layout (e.g. grab bars). Coordinate specific requirements with user.
D201003	Lavatories	1 each	As required	½" solid surfacing countertop lavatories in Heads shall be under-mounted solid-surfacing sinks integral to the countertop. Provide gooseneck faucet at lavatory. For handicap-accessible rooms, provide Architectural Barriers Act Accessibility Standards (ABAAS)-compliant details / layout. Coordinate specific requirements with user.
D201004	Sinks	1 each	As required	Countertop Kitchen Sinks: Single-compartment, stainless steel, under-mount unit (14" wide x minimum 8" deep). Provide gooseneck style faucet at sink.
D201005	Showers / Tubs	1 each	As required	Supply Fittings: Shower head shall be immobile and positioned to spray away from shower opening. For handicap-accessible rooms, use regular shower head and provide grab bars. Coordinate specific requirements with user.
D201005	Showers / Tubs	1 each	3'-0" x 3'-0"	Solid Surfacing Shower Floor Receptor: Solid Surfacing Shower Floor Receptor: Minimum thickness ½ inch throughout and ¾-inch in a 12-inch diameter area at drain. For Handicap "Lite"-Accessible Units, provide regular shower stall with no fold-down seat details / layout. Coordinate specific requirements with user.
D201005	Showers / Tubs	As required	As required	Solid Surfacing Shower Surround: Provide a ¼" minimum thickness solid surfacing surround extending from top of shower floor receptor to ceiling. Provide cementitious backer unit behind shower surround.
D203003	Floor Drains	1 each	As required	Shower floor.

D502001	Lighting and Branch Wiring	See specific requirements	As required	Provide Dedicated Circuits And Connections For The Following Special Outlets: In the Sleeping Room, provide four 20-ampere quadraplex receptacles on two dedicated 20-ampere circuits. In the Service Area, provide three receptacles; one dedicated 20-ampere appliance circuit / Ground-Fault Circuit Interrupter (GFCI) receptacle above the counter for the microwave oven, one dedicated 20-ampere appliance circuit / receptacle for the refrigerator, and one dedicated 20-ampere circuit / Ground-Fault Circuit Interrupter (GFCI) receptacle at countertop height. Provide a 20-ampere Ground-Fault Circuit Interrupter (GFCI) receptacle on a dedicated 20-ampere circuit in the Head. For handicap-accessible rooms, provide Architectural Barriers Act Accessibility Standards (ABAAS)-compliant details / layout (e.g. mounting height and location of switches and convenience outlets). Coordinate specific requirements with user.
D502002	Lighting Equipment	As required	As required	Provide general lighting throughout the individual room plan to achieve average maintained illumination of 30 foot-candles. Lighting shall coordinate with the Structural Interior Design (SID) package and shall be installed to limit “strobe effect” caused by ceiling fan. Provide valance lighting over Head lavatory. Valance lighting may be integral to the two medicine cabinets. Provide lighting in each Closet and Head with motion-activated switch. Provide one dimmable switch on each side of the Sleeping Room.
D503001	Telecommunications Systems	See specific requirements	As required	Provide telecommunication outlets. Each outlet shall have two 8-pin RJ-45 Registered Jacks with conduit. Provide two outlets on each opposing side wall.
D503006	Television Systems	See specific requirements	As required	Provide one Cable Television (CATV) outlet on each opposing side wall.
E201002	Window Treatments	1 each	As required	Manually-operated, light-filtering solar shades with 3% openness.
E202090	Other Movable Furnishings	2 each	As required	Provide wall-mounted iron organizer inside each Closet to store ironing board and iron.

6. ENGINEERING SYSTEMS REQUIREMENTS

A10 FOUNDATIONS

SYSTEM DESCRIPTION

Provide the building foundation system in accordance with UFC 3-301-01, *Structural Engineering*. Foundation shall be designed to suit subsurface conditions, and shall be capable of transmitting all building loads to the ground. See Section B10, *Superstructure*, for additional loading criteria.

GENERAL

GOVERNMENT-PROVIDED GEOTECHNICAL INFORMATION

Subsurface soil information, including a geotechnical report is included in other portions of this RFP.

Any included subsurface information is only for the Contractor's information and is not guaranteed to fully represent all subsurface conditions. The Government shall not be responsible for any interpretation or conclusion by the Contractor drawn from the data or information.

Any geotechnical report accompanying the subsurface information is provided only to better convey data (boring logs, testing, etc.) or to document observed site conditions. The assumptions, analysis, and recommendations of any accompanying report were developed for preliminary planning purposes only and may not reflect present project requirements. The Contractor is required to retain a Geotechnical Engineer experienced and licensed in the geographic region of the project to interpret the Government provided information as related to his design concept and develop geotechnical requirements to support design and construction.

Minor variations in subsurface conditions between borings should be anticipated. The Contractor shall bear all costs associated with the site preparation, ground improvement and foundations except as allowed by Contract Clause FAR 52.236-2, "Differing Site Conditions". The Contractor's Geotechnical Engineer shall perform additional subsurface investigation/testing as required to adequately determine all applicable geotechnical factors including the type and capacity of the project foundations. The Contractor's Geotechnical Engineer shall consider the provided information and any additional information obtained and shall prepare a report as described in other portions of this RFP. The minimum requirements for the subsurface investigation and report are as required by UFC 1-300-09N with associated references.

As a minimum, the successful bidder's Geotechnical Engineer shall perform additional borings, and subsequent laboratory classification of soils encountered, on the building site to support the selected building system designs.

Observed site conditions which may present a challenge during design/construction include - The soils that will be exposed after completion of stripping will be soft and at or near the groundwater elevation. The Contractor will anticipate these marginal subgrade support conditions and incorporate measures into his design and construction procedures to obtain required soil support while maintaining progress for completion on schedule. Engage a registered Professional Engineer to provide inspection of excavations and soil/groundwater conditions throughout construction. The Engineer shall be responsible for performing pre-construction and periodic site visits throughout construction to assess site conditions. The Engineer shall be available to meet with the Contracting Officer throughout the contract duration. The Contractor shall bear all costs of the Engineer.

SEISMIC DESIGN

Seismic Site Classification shall be determined in accordance with UFC 3-301-01, *Structural Engineering*, and the 2008 USGS Ground Acceleration Maps.

A1010 STANDARD FOUNDATIONS

As determined by the Designer of Record to be applicable, provide a Standard foundation. "Standard Foundations" are shallow or deep foundations as specifically addressed in IBC Chapter 18. Do not use masonry unit footings, steel grillage footings, timber footings, or wood foundations.

Based on existing Government-provided subsurface information, or on preliminary subsurface investigation, it is anticipated that the foundation for the building will utilize pre-stressed concrete piles.

The load capacity of piles, as determined by pile driving formulae, shall be verified by static load tests or by dynamic pile analysis methods. Provide separate unit prices for dynamic analysis, compression pile load tests, and tension pile load tests to establish the credit to the Government for load tests that are not performed.

A1020 SPECIAL FOUNDATIONS

As determined by the Designer of Record to be applicable, provide a Special foundation. "Special Foundations" are any foundation types that are not specifically "Standard Foundations", or a combination of Standard Foundations and a site improvement/ground modification system. Examples of site improvement/ground modification systems include surcharging, stone columns, rammed aggregate piers, impact densification, compaction grouting, vibro-flotation, etc. As "Special Foundation" techniques or systems typically require the use of specialty contractors, a Professional Engineer shall establish installation and acceptance criteria and supervise the installation. The Designer of Record shall submit justification for use, including acceptable evidence of previous successful installation in similar conditions, methods and equipment used in their installation, proposed testing and inspection to be used, supporting test data, calculations and any other information related to the structural properties and load capacity of such system. The allowable stresses for piles/piers shall not exceed those limitations specified in UFC 1-200-01.

A1030 SLAB ON GRADE

As determined by the Designer of Record to be applicable, provide a standard concrete slab on grade. Where slab on grade is below the existing adjacent exterior grade, provide water/dampproofing and a perimeter drainage system to remove ground water from the area immediately adjacent to the buildings. Provide perimeter insulation at slabs areas adjacent to conditioned interior spaces

A1040 STRUCTURALLY-SUPPORTED SLAB

As determined by the Designer of Record to be applicable, provide a structurally supported slab. Provide for support of all utilities that may be adversely affected by soil consolidation or expansive soils. Provide stainless steel supports sized adequately to support the in-service utility. Where the structurally supported slab is below the existing adjacent exterior grade, provide water/dampproofing and a perimeter drainage system to remove ground water from the area immediately adjacent to the buildings. Provide perimeter insulation at slabs areas adjacent to conditioned interior spaces.

A1050 FOUNDATION WALLS

Foundation walls include exterior walls below the ground floor level of the building, including walls that are below grade for elevator pits and other pits. Provide foundation walls constructed of reinforced cast-in-place concrete. Provide elastomeric sheet waterproofing and insulation of foundation walls. Provide continuous elastomeric sheet waterproofing and protection board beneath foundation and elevator pit slabs, and integrate into wall waterproofing. Provide water stops at concrete cold joints.

Provide waterproofing system manufacturer's minimum 10-year written warranty against leaks or failure of waterproofing systems. Provide waterproofing manufacturer's recommended field quality control, testing, and inspection of waterproofing surfaces prior to pouring concrete slabs and backfilling of foundation walls.

--End of Section--

6. ENGINEERING SYSTEMS REQUIREMENTS

B10 SUPERSTRUCTURE

SYSTEM DESCRIPTION

Provide building framing systems in accordance with UFC 3-301-01, *Structural Engineering*. In addition, design the structures in accordance with the following loading criteria:

Importance Factors:

Use Occupancy Categories as indicated in Table 2-2 of UFC 3-301-01 for determining Importance Factors for seismic, snow, and wind design.

Wind Exposure:

Wind design shall be based on Exposure C.

B1010 FLOOR CONSTRUCTION

The floor construction shall include non-composite concrete slabs on steel form deck, composite concrete slabs on composite steel deck, cast-in-place concrete slabs on removable forms, or precast concrete slabs. The floor shall be supported by cast-in place concrete walls or concrete masonry walls. Steel columns, beams, and joists, and concrete columns and beams may be used as required. See System B20, *Exterior Enclosure*, for exterior walls.

B1020 ROOF CONSTRUCTION

The roof construction shall include steel roof deck on steel joists, steel roof deck on steel beams, or steel roof deck on light-gage metal framing. The roof shall be supported by cast-in place concrete walls or concrete masonry walls. Steel columns and beams, and concrete columns and beams may be used as required. See System B20, *Exterior Enclosure*, for exterior walls.

--End of Section--

6. ENGINEERING SYSTEMS REQUIREMENTS

B20 EXTERIOR ENCLOSURE

SYSTEM DESCRIPTION

This system consists of the exterior shell of the facility, which includes all vertical and horizontal exterior enclosure such as exterior walls, exterior windows, and exterior doors. This system excludes roofing (See System B30, *Roofing*). Load-bearing exterior walls will be included here, and not in System B10, *Superstructure*. Structural frame elements at exterior such as columns, beams, and spandrels are included in Superstructure, with only the applied exterior finishes (e.g., paint, stucco) being included here. Finishes to the inside face of walls which are not an integral part of the wall construction will be included in System C30, *Interior finishes*.

GENERAL SYSTEMS REQUIREMENTS

B2010 EXTERIOR WALLS

The primary exterior material of the buildings shall be brick masonry to match existing adjacent structures on the base.

A cast-in-place or precast concrete water table shall match existing adjacent structures.

Brick masonry details shall be consistent with the existing adjacent buildings.

The backup wall system for brick veneer construction shall be cast-in-place concrete or concrete masonry.

Pre-engineered buildings with concrete masonry unit and brick veneer exterior walls are prohibited.

B201001 EXTERIOR CLOSURE

Provide brick veneer exterior wall closure.

Exterior Insulation Finishing System is not permitted.

B201002 EXTERIOR WALL BACKUP CONSTRUCTION

Provide Exterior Wall Construction System (backup systems for wall veneer) including cast-in-place concrete or unit masonry wall systems with insulation, control joints, expansion joints, and vapor control.

Exterior bearing walls consisting of metal studs as the primary floor or roof-supporting structural element are not permitted.

B201003 INSULATION AND VAPOR RETARDER

Provide insulation and vapor barriers.

Provide a continuous air barrier to control air leakage into, or out of, conditioned spaces. The building envelope shall include all elements of the facility that are exposed to the outside environment or outside environmental conditions such as roof, walls, floors, and compartmentalized unconditioned portions of the facility such as negatively-pressurized spaces. Permanently seal penetrations through the air barrier, joints in the air barrier, adjoining construction, and transitions to different air barrier materials. Confirm air barrier compliance with air barrier performance tests in RFP Part 4.

B201005 EXTERIOR LOUVERS & SCREENS

Provide exterior louvers and screens, where required, that match the finish of the windows and detailed to integrate with the architecture of the building, as appropriate to the design of the building.

B201007 EXTERIOR SOFFITS

Provide exterior perforated, prefinished aluminum soffit system.

B201009 EXTERIOR PAINTING AND COATINGS

Provide field-applied exterior coatings for all items that are not prefinished, and to prefinished items when required to provide a color other than a standard prefinished color.

B201010 EXTERIOR JOINT SEALANTS

Provide exterior application of joint sealants to seal joints and prepare for finish material installation.

B201011 SUN CONTROL DEVICES (EXTERIOR)

Sun control devices shall be detailed to integrate with the architectural wall system.

B201012 SCREEN WALL

Provide screen walls where they are required to screen mechanical units, electrical substations, loading docks, and trash receptacles. Screen walls shall be compatible with the building architecture.

B2020 EXTERIOR WINDOWS

As much as practical, windows shall be provided in each area of the building that is regularly-occupied, to enhance the environment, without compromising visual acuity and comfort. Natural daylighting is preferred. Exterior windows shall be prefinished aluminum. Thermally-broken windows shall meet Antiterrorism requirements and be designed to resist impact / breakage by hurricane windborne debris per the 2006 International Building Code.

If approved by the Designer of Record, the sample window may be installed in an opening in a framed wall, and the mock-up may be left during construction as a cut-away of the installation. For masonry walls, the sample window shall be installed in the masonry sample panel, including flashing, sealants, and head, jamb, and sill construction.

B202001 WINDOWS

Windows shall be aluminum, and operable. Operable windows shall be provided with an integral heavy-duty insect screen.

Provide a mockup of one combination window unit for the project to be used for a field mockup test of compliance with AAMA 502 Method A and Method B.

B202002 STOREFRONTS

Storefronts shall be thermally-broken aluminum.

B202004 EXTERIOR GLAZING

Glazing color shall be clear. Provide exterior glazing of high visible light transmittance but sufficient shading coefficient to coordinate with envelope and energy efficiency goals related to obtaining US Green Building Council Leadership in Energy and Environmental Design certification. All inboard lites of insulating glass units shall be clear.

Exterior glazing shall typically be laminated, insulating glass at all openings except where specified herein otherwise. Where inboard lite of insulating glass units is designed to meet hurricane windborne debris resistance, outboard lite shall meet large missile test of ASTM E1996-2009. Provide low-emissivity glass coating at all insulating glass units by applying a thin metallic, “hard coat” high-transmittance coating to the number three surface.

B2030 EXTERIOR DOORS

Provide solid door assemblies other than at the main entrance. Exterior doors and frames shall be non-corroding prefinished galvanized steel.

Doors shall be Maximum Duty Doors - ANSI / SDI A250.8, Level 4, physical performance Level A, Model 2. Exterior doors shall meet Antiterrorism requirements and be designed to resist impact / breakage by hurricane windborne debris per the 2006 International Building Code.

Glazing shall match the window glazing. The Sound Transmission Class (STC) rating for door and frame assemblies shall be 39 (minimum) when tested in accordance with ASTM E90.

B203001 SOLID DOORS

Provide solid steel door assemblies, other than at main storefront entrances, including prefinished galvanized heavy-duty, non-corroding, insulated doors with frames and hardware. Also provide louvers and accessories and wall opening elements such as lintels, sills, and flashings.

B203002 GLAZED DOORS

Provide Exterior Glazed Doors and Entrances System, including factory-finished aluminum-framed door assemblies with insulated glazing, frames, and hardware compatible with other buildings on the base and wall opening elements such as lintels, sills, through-wall flashings, and joint sealers.

B203008 EXTERIOR DOOR HARDWARE

Provide the services of a certified door hardware consultant to prepare the door hardware schedule.

Provide hardware keying compatible with the existing Base-wide keying system. Replacement interchangeable cores shall be compatible with the Best Lock system. Coordinate all lock, panic hardware, closer, and keying requirements with the Base locksmith.

Doors designated by user shall have a locking system which authenticates and provides physical access by utilizing magnetic swipe encoder from Common Access Cards (CAC). The Access Control System (ACS) shall be Federal Information Processing System (FIPS)-201 compliant. The ACS shall include, but not be limited to, CAC magnetic readers, electronic security locks, programming cable, software, mounting hardware, set of mechanical keys, and a workstation with security access management system software. The door access shall be lithium battery-powered. Special battery packs are prohibited. Locksets shall be ANSI / BHMA A156.2, Series 4000, Grade 1, cylindrical, tamper-resistant, UL-listed with 1-inch throw deadbolt, 3/4-inch throw latch bolt, auxiliary dead-locking latch, and 2-3/4 inch backset. There shall also be a physical key override.

--End of Section--

6. ENGINEERING SYSTEMS REQUIREMENTS

B30 ROOFING

B30 GENERAL SYSTEM DESCRIPTION

Roof systems shall be an Energy Star Qualified Product, watertight, and compatible with facility function, construction, and service conditions. Provide complete roof system design and construction services for the entire new facility roof system, including all ancillary and incidental work necessary for a complete, new, watertight roof system installation.

Submittal Requirements: Components of a minimum roof submittal shall include the roof plan, method of drainage, standard details, and details unique to the project, wind-load calculations, and requirements.

Built-in gutter systems where drainage passes through an interior space or is concealed in the exterior cavity wall shall be prohibited.

Refer to UFC 3-110-03, *Roofing*, and UFC 3-100-10N, *Architecture*, for additional roofing requirements.

B3010 ROOF COVERINGS

B301001 STEEP-SLOPE ROOFING SYSTEMS

Steep-slope roofing systems are preferred over low-slope roofing systems, where practical. Steep-slope roofing systems that are acceptable include metal.

The roof system shall be designed and attached to resist wind uplift pressures calculated in accordance with ASCE 7. Uplift resistance shall be validated by applicable Factory Mutual (FM), Underwriters Laboratories (UL), or ASTM uplift resistance test procedures. Steel panels shall be zinc-coated steel conforming to ASTM A-653, aluminum-zinc alloy-coated steel conforming to ASTM A-792 AZ 55 coating, or aluminum-coated steel.

Metal Roof Warranty: Furnish the metal roof panel manufacturer's 20-year no dollar limit roof system materials and installation workmanship warranty, including flashing, components, trim, and accessories necessary for a watertight roof system construction. If within the warranty period, the metal roof system, as installed for its intended use in the normal climatic and environmental conditions of the facility, becomes non-watertight, shows evidence of moisture intrusion within the assembly, displaces, corrodes, perforates, separates at the seams, or shows evidence of excessive weathering due to defective materials or installation workmanship, the repair or replacement of the defective and damaged materials of the metal roof system and correction of defective workmanship is the responsibility of the metal roof panel manufacturer. All costs associated with the repair or replacement work are the responsibility of the metal roof panel manufacturer. If the manufacturer or their approved applicator fails to perform the repairs within 72 hours of notification, emergency temporary repairs performed by others do not void the warranty. Damage to the roofing system caused by winds having a velocity of 128 mph (3-second gust) or less will be covered by the warranty.

SSSMRS Warranty Certificate: At the completion of the project the Contractor shall furnish signed copies of the 20-year Warranty for Structural Standing-Seam Metal Roof (SSSMR) System (a sample copy of which is attached to the PTS section), the 20-year Manufacturer's Material Warranties, and the manufacturer's 20-year system weather-tightness warranty.

Specular Gloss of Finished roof surfaces shall have a specular gloss value of 30 (plus-or-minus) at 60 degrees when measured in accordance with ASTM D 523.

B301004 FLASHINGS AND TRIM

Flashing and sheet metal work shall include splash pans and sheet metal roofing. Flashings shall be pre-finished aluminum. Finish shall be baked-on factory-applied color coating of polyvinylidene fluoride (PVF2) or other equivalent fluorocarbon coating with a minimum thickness of 0.8 to 1.3 mils.

B301005 GUTTERS AND DOWNSPOUTS

Provide gutters and downspouts compatible with roofing material and finish. Concealed (interior) gutters and downspouts are prohibited. Refer to D20 “Plumbing” for the rainwater management system.

B301090 OTHER ROOFING

Provide lightning protection, without penetrating the roof membrane or flashing components, in accordance with details approved by the roofing manufacturer.

--End of Section--

6. ENGINEERING SYSTEMS REQUIREMENTS

C10 INTERIOR CONSTRUCTION

SYSTEM DESCRIPTION

Interior construction includes interior partitions, interior doors, casework, interior windows, and fittings.

Provide durable construction appropriate to the building's use as a Marine Corps barracks. Acoustic properties of materials, as well as durability, shall be considered during material selection.

GENERAL SYSTEMS REQUIREMENTS

The Project is subject to abuse and requires that "Impact-Resistant" systems be provided. See "Room Requirements" for specific requirements on "Partitions", "Interior Doors", and "Fittings".

ACOUSTICAL REQUIREMENTS

Interior construction shall achieve the following acoustical isolation in terms of Sound Transmission Class (STC)-rated wall and floor-ceiling construction:

a. Walls between sleeping rooms and between sleeping rooms and corridors, and exterior walls of sleeping rooms shall have a minimum Sound Transmission Class (STC) of 55.
b. Walls within sleeping rooms (room to room) minimum Sound Transmission Class (STC) of 50.
c. Floor and ceiling assemblies shall have a minimum Sound Transmission Class (STC) of 55 and shall have an Impact Isolation Class (IIC) of at least 60.
d. Do not compromise the acoustical integrity of wall, floor, or ceiling assemblies with telephone, cable television, convenience outlets, and mechanical ducts.
e. Field-test assemblies in accordance with ASTM E 336.
f. Doors between sleeping rooms and interior corridors shall have a minimum Sound Transmission Class (STC) of 41.

C1010 PARTITIONS

All interior partitions shall be concrete masonry units (CMU) or cast in place concrete. Provide Duraplex additive, or equal, to plaster veneer on interior face of Concrete Masonry Unit walls.

Concrete mixture shall provide an average compressive strength of 3000 PSI (20,680 kPa) and meet or exceed ACI 301.

C101001 FIXED PARTITIONS

Provide fixed interior partitions.

C101004 INTERIOR GUARDRAILS AND SCREENS

Provide balustrades where required by code.

C101005 INTERIOR WINDOWS

Provide interior windows of aluminum or hollow metal, fixed.

C101007 INTERIOR GLAZING

Interior glazing shall be clear glass, tempered or laminated at non-rated windows, and fire-rated or wire glass at fire-rated assemblies.

C1020 INTERIOR DOORS

C102001 STANDARD INTERIOR DOORS

All interior doors shall be flush.

All interior doors shall be stain grade wood, except where hollow metal doors are required to meet fire rating.

All interior door frames shall be hollow metal.

Flush wood doors shall be WDMA I.S.1A-04, custom grade, extra heavy-duty. Flush wood doors shall be WDMA I.S.-97 SCLC-5 5-ply structural composite lumber core.

Doors adjacent to paneling or millwork shall comply with corresponding AWI millwork grade.

Provide door and frame assembly with Sound Transmission Coefficient (STC) of 41, for bedroom entry doors. Veneer for flush doors shall be quarter sawn white birch in veneer match, stain color as determined by user.

Doors shall have Factory Finish of AWI Quality Standards Section 1500, specification for catalyzed polyurethane or acrylated ultra-violet-curable epoxy.

C102002 GLAZED INTERIOR DOORS

Provide vision glazing in doors where it is required by the Room Requirements portion of this RFP, or it is deemed advantageous to be able to see through the door, either for safety of pedestrian traffic, or other functional reason. Door glass shall be tempered or laminated, and where required, fire-rated at rated door assemblies.

C102003 FIRE DOORS

Provide interior fire doors, with rating as required to meet all applicable codes.

C102007 INTERIOR DOOR HARDWARE

Provide the services of a certified door hardware consultant to prepare the door hardware schedule.

Provide hardware keying compatible with the existing Base-wide keying system. Replacement interchangeable cores shall be compatible with the Best Lock system. Coordinate all lock, panic hardware, closer, and keying requirements with the Base locksmith.

Doors designated by user shall have a locking system which authenticates and provides physical access by utilizing magnetic swipe encoder from Common Access Cards (CAC). The Access Control System (ACS) shall be Federal Information Processing System (FIPS)-201 compliant. The ACS shall include, but not be limited to, CAC magnetic readers, electronic security locks, programming cable, software, mounting hardware, set of mechanical keys, and a workstation with security access management system software. The door access shall be lithium battery-powered. Special battery packs are prohibited. Locksets shall be ANSI / BHMA A156.2, Series 4000, Grade 1, cylindrical, tamper-resistant, UL-listed with 1-inch throw deadbolt, 3/4-inch throw latch bolt, auxiliary dead-locking latch, and 2-3/4 inch backset. There shall also be a physical key override.

Door hardware finish shall be stainless steel. Use non-removable pin hinges on outward-opening closet doors. Provide “1880 Slide Bolt Padlock Latch” manufactured by Architectural Builders Hardware Manufacturing, Inc., or “HFT 7412 Single Handle Mortise Slide Bolt” manufactured by B.A. Hoft, Inc., for all sleeping room closet doors.

Provide at least one hand-held programmer per building. Refer to PTS Section C10, Interior Construction, C102007 Door Hardware, for details.

C1030 SPECIALTIES

C103002 TOILET AND BATH ACCESSORIES

Provide toilet and bath accessories. Semi-recessed towel and receptacle units shall be used in public toilets.

Provide toilet and bath accessories as indicated in Chapter 5 "Room Requirements" portion of this RFP.

C103003 MARKER BOARDS AND TACK BOARDS

Provide marker boards and tack boards as indicated in Chapter 5 "Room Requirements" portion of this RFP. Marker boards and tack boards are funded as part of the construction contract.

C103004 IDENTIFYING DEVICES

All necessary interior signage shall be incorporated as part of the architectural drawings. Interior signage is not collateral equipment. Interior signage shall demonstrate complete coordination with the facility design, SID, and FF&E submittals. Provide interior directional signage as required for facility way finding. Provide an identifying device at each interior door. All identifying devices shall be wall mounted, landscape oriented 8-1/2” x 11” frame with top slot for occupant or room identification.
Signs must meet ADA requirements.

C103005 LOCKERS

Provide lockers. Lockers shall be high density polyethylene/solid plastic. Lockers are funded as part of the construction contract.

C103006 SHELVING

Provide melamine covered plywood with heavy duty steel shelving supports. Provide metal shelving with heavy duty steel shelving supports as indicated in part 3, chapter 5 “Room Requirements.” Built-in fixed shelving is funded as part of the construction contract.

C103007 FIRE EXTINGUISHER CABINETS

Provide fire extinguishers and cabinets in accordance with NFPA 10. Cabinet shall be semi-recessed and surface-mounted in mechanical / electrical spaces. Cabinets shall be coordinated with interior finishes.

C103008 COUNTERS

Provide solid acrylic within a Grade-3 Level with a full range of color selection, countertops, and backsplashes.

C103009 CABINETS

Provide cabinetry and millwork items with associated accessories. Cabinets shall be Architectural Woodworking Institute (AWI) Custom Grade and have concealed hinges with adjustable shelves. Cabinets shall be constructed using plywood or solid wood. Use of particleboard or medium-density fiberboard (MDF) is prohibited. All exposed surfaces will be hardwood veneer with exposed edges of solid hardwood. Provide specific cabinetry as shown on the Room Requirements Sheets.

C103010 CASEWORK

Provide specific casework as shown on the Room Requirements Sheets.

C103012 FIRESTOPPING PENETRATIONS

Provide all sleeves, caulking, and flashing for fire stopping penetrations.

C103013 SPRAYED FIRE-RESISTIVE MATERIALS

Provide sprayed fire-resistive materials to the building’s framework to prevent structural failure.

C103014 ENTRANCE FLOOR GRILLES AND MATS

Provide recessed-pan floor mats at main building entrances.

--End of Section--

6. ENGINEERING SYSTEMS REQUIREMENTS

C20 STAIRS

SYSTEM DESCRIPTION

Stairs, including stair construction and stair finishes, shall be provided as required by the building code to provide egress from the building from above-grade level floors. Stairs shall be in accordance with UFC 1-200-01, *General Building Requirements*.

GENERAL SYSTEMS REQUIREMENTS

C2010 STAIR CONSTRUCTION

C201001 INTERIOR AND EXTERIOR STAIRS

Interior stairs shall be constructed of steel with concrete-filled pans or cast-in-place concrete.

Exterior stairs shall be constructed of cast-in-place reinforced concrete.

Concrete is an acceptable finish for exterior stairs. Exterior concrete stairs shall have cast aluminum treads with abrasive surface.

Steel stairs shall be primed and painted.

C201090 HANDRAILS, GUARDRAILS, AND ACCESSORIES

Handrails and guardrails shall be painted steel. Handrails and guardrails shall present a smooth, unbroken surface throughout the length of the stair.

Handrails and guardrails shall be finished to withstand extreme wear conditions.

--End of Section--

6. ENGINEERING SYSTEMS REQUIREMENTS

C30 INTERIOR FINISHES

SYSTEM DESCRIPTION

Interior finishes include wall finishes, floor finishes, wall base finishes, and ceiling finishes.

Provide aesthetically pleasing, functional, durable finishes appropriate to the buildings function. Acoustic properties of materials, as well as durability and ease of maintenance, shall be considered during material selection. Maximize the use of sustainable materials.

Color selections require the use of wall and floor finish material accents to enhance the color and appearance of the interior design. Provide finish plans indicating accent wall locations and floor patterns.

GENERAL SYSTEMS REQUIREMENTS

See "Room Requirements" for specific requirements on "Interior Finishes."

All wall finishes shall include of a field color and a minimum of one accent color. All floor patterns shall include a field color and a minimum of two accent colors.

Surface colors, textures, and patterns with the finishes should be coordinated with Sections E20 “Furnishings” and C10 “Interior Construction.”

Adherence to the following design criteria is critical:
UFC 3-120-10 (15 JUN 2006) DESIGN: GENERAL INTERIOR DESIGN REQUIREMENTS

C30 SSPC QP 1 CERTIFICATION

The Project requires industrial coatings on interior factory finished metal surfaces. All contractors and subcontractors that perform surface preparation or coating application shall be certified by the Society for Protective Coatings (formerly Steel Structures Painting Council - SSPC) to the requirements of SSPC QP 1 prior to contract award, and shall remain certified while accomplishing any surface preparation or coating application.

C3010 WALL FINISHES

See Room Requirements for finishes.

Wall finishes provided in UFC 4-721-10 and 4-722-01 are considered minimum only and are superseded by finishes specified in Room Requirements. All primer and paint systems shall be the manufacturer’s highest premium quality professional grade. All materials shall be moisture and mildew resistant and easily cleaned. Do not use lead or lead-based paint.

In addition, the following upgrades are desirable:

a. Solid surfacing wall finishes shall extend from top of shower pan to ceiling and shall surround the shower enclosure. Seams at corners only. Epoxy seams to match Solid surfacing material.
b. Concrete or a masonry unit or as indicated in the Room Requirements portion of this RFP.

c. Polished ground split face block, in corridors and entrance lobby as accent walls or as wainscot (min 40") see "Room Requirements".
d. Concrete block walls shall be one-coat of latex block-filler followed by one-coat of alkyd wall primer/sealer and one finish coat alkyd semi-gloss enamel paint, for a smooth finish.
e. Gypsum board shall receive latex primer and two coats of flat finish, lead-free paint.
f. Porcelain Tile. Min 6"x6" size, mid-grade tiles with a wide range of accent colors available. Provide designer decorative accent strips or coordinating accessory tile shapes as an integral part of the porcelain wall tile system.
g. Provide full and adequate protection systems for interior finishes. Commercial, premium grade, 1 ¼" radius corner, heavy, vinyl corner guards shall be used on all outside corners, as appropriate. Provide floor-mounted doorstops for all interior doors that do not have automatic closure mechanisms with travel limit adjustment.
h. Telecomm closets shall receive paint and floor-to-ceiling, ¾" plywood that is fire -rated, B-sanded face grade on side and back walls.

C3020 FLOOR FINISHES

Floor finishes shall be as indicated in the "Room Requirements" portion of this RFP.

Provide floor finish materials to meet the following requirements:

Carpet Requirements

Carpet Tile	24" x 24"
Surface Color	Multi-colored
Surface Texture	Textured Loop/or cut/Loop
Yarn Weight	24 oz minimum
Density	6600 oz./cubic yard min.
Dye Method	Solution Dyed
Backing	Industry Standard
Fiber	Branded nylon

Concrete Floor Requirements

Finished concrete surfaces to be smooth enough to meet the minimum requirements of this RFP or the floor finish manufacturer's smoothness requirements, whichever is the most restrictive. Exposed concrete floors that are not required to have an applied floor finish, shall receive a minimum of 3 coats of the manufacturer's approved sealer.

Resilient Floor Finishes

Provide resilient floor finishes as identified in the Project Program, Room Requirements or as directed below. Include manufacturer's full line of color, texture, and pattern selections, including multi-colored materials.

Provide resilient solid vinyl plank flooring (class III), in areas as indicated for floors with high durability, low maintenance, with Architectural Barriers Act Accessibility Standard (ABAAS) compliant slip-resistance requirements. Solid vinyl flooring shall be planks 4" x 36" (wood grain look) with protective urethane finish for ease of maintenance with a manufacturer's 25 year minimum warranty is required. The product shall require no wax maintenance.

Provide resilient rubber tile in areas as indicated Flooring products to be high durability, and low maintenance, with Architectural Barriers Act Accessibility Standard (ABAAS) compliant slip-resistance requirements. Rubber tile shall be 100% synthetic rubber with through color and slip resistant formulation and surface texture. Include all manufacturer's standard surface textures and patterns. The product shall require no-wax maintenance.

Tile Floor Finishes

Provide epoxy grout for all tile finishes.

Porcelain Tile -Non-slip, thru-color, min 10”x10” porcelain tiles with coordinating tile base shall be used as indicated in the “Room Requirements.” Provide matching porcelain tile cove base and pre-formed corners. Mid-grade tiles with a wide-range of accent colors shall be used.

Terrazzo Floor Finishes

Cementitious Terrazzo Floor and coordinating base shall be used in areas as indicated in Room Requirements. Provide cementitious terrazzo in accordance with the NTMA bonded terrazzo specification and incorporate (2) accent colors, and divider strips in a pattern to create interest.

Base

Wall base shall be as indicated in the “Room Requirements”. Areas with tile floor, base to match floor material minimum 4” height.

Shower Pan

Solid surfacing to match shower enclosure walls. Surface shall be slip resistant.

C3030 CEILING FINISHES

Finished surface of ceiling tiles shall be selected to address acoustical, maintenance, moisture, or impact resistance requirements of the room.

Suspended acoustical panel ceiling system: Ceiling finish shall be 24 inch by 24 inch by 5/8 inch minimum thickness, with a smooth finish panel surface. Grid shall be 9/16”. For projects that require a LEED rating provide environmentally friendly panels with a higher recycled content.

Suspended moisture-resistant gypsum board: Provide an interior latex semi-gloss enamel paint finish in Toilets, Showers, and Locker Rooms.

Exposed structural systems shall be painted according to PTS Section C3040 INTERIOR COATINGS AND SPECIAL FINISHES.

C3040 INTERIOR COATINGS AND SPECIAL FINISHES

Paint all interior exposed surfaces including metal items, such as interior grilles, registers, diffusers, access panels, and panel boxes.

All finish coatings shall be as indicated in the "Room Requirements” portion of this RFP.

--End of Section--

6. ENGINEERING SYSTEMS REQUIREMENTS

D10 CONVEYING

SYSTEM DESCRIPTION

Conveying System shall include elevators.

D1010 ELEVATORS AND LIFTS

Design assembly and arrangement of elevator, accessories, and supporting systems in accordance with ASME/ANSI A17.1 and NAVFAC ITG FY01-1, *Elevator Design Guide*. Provide all materials and equipment, including but not limited to elevator cab and hoist equipment, operating and signal fixtures, doors, door and car frames, car enclosure, controllers, motors, guide rails, brackets, and testing.

D101001 GENERAL CONSTRUCTION ITEMS

Provide a traffic analysis.

Provide minimum of one elevator for BEQs three stories or less, and provide minimum of two elevators for BEQs four or five stories. Area excludes separate elevator equipment room. Refer to support area for square footage.

Requirements for total run distance from the first floor's finish to the highest floor level's finish shall determine the elevator type. Elevator shall be hydraulic type where the distance from the first floor's finish to the highest floor level's finish is less than forty-four feet. Provide traction-type elevator where the distance from the first floor's finish to the highest floor level's finish is at or above forty-four feet. Provide elevators which will allow adequate clearance for a medical emergency stretcher to be positioned in full horizontal position.

D101002 PASSENGER ELEVATORS

Provide a minimum of one hydraulic passenger elevator, located adjacent to the lobby area. Speed and rated load capacity of the elevator(s) shall be based on designer's survey of the facility user needs.

Elevator finishes and fixtures shall be derived from manufacturer's selections, be coordinated with the interior architectural design, and be responsive to the user's needs and function. Coordinate the design of the elevator machine room with applicable codes and the elevator manufacturer's requirements.

--End of Section--

6. ENGINEERING SYSTEMS REQUIREMENTS

D20 PLUMBING

Refer to Part 4 Section D20 for performance requirements of the building elements included in the plumbing system. All design and installation shall be in accordance to the latest edition of MCAS Cherry Point N.C. Mechanical Policies and the MCAS Cherry Point AE Design Guide. The MCAS Cherry Point AE Design Guide can be found on the Whole Building Design Guide web site where the Construction Criteria Base (CCB) is located. The link for the MCAS Cherry Point AE Design Guide is as follows: http://www.wbdg.org/ccb/browse_cat.php?o=30&c=95.

(The July 9, 2007 edition of the MCAS Cherry Point N.C. Mechanical Policies is included as an attachment in the Part 6 of this RFP package.)

SYSTEM DESCRIPTION

The plumbing system for Bachelor Enlisted Quarters consists of all fixtures, potable cold and hot water piping and equipment, piping insulation, water heating equipment, sanitary waste and vent piping systems, and other specialty piping and equipment within 5 foot (1.5 meter) of the building. Refer to Building Requirements, Space Tabulations Section of the Project Program for building occupancy levels. Design and installation shall be in accordance to the latest editions of the International Mechanical Code (IMC), International Plumbing Code (IPC), all applicable UFC, NFPA standards, DOD design publications (including the mechanical policies referenced above).

GENERAL SYSTEM REQUIREMENTS

Provide working space around all equipment. Provide concrete pads 100 mm (4 inch) under all equipment (water heaters, pumps, etc.). Provide all required fittings, connections, and accessories required for a complete and usable system. All equipment shall be installed per the criteria of RFP section D20 and the manufacturer's recommendations. Steam shall be utilized for domestic hot water generation. All sanitary and domestic water piping shall be installed in central chases. Piping shall be routed to permit unobstructed access in the entire chase for maintenance personnel. Piping within the BEQ shall not be routed exposed in occupied spaces. All piping located below the building shall be supported from the building support slab if a supported floor slab is used. Design and installation shall be in accordance with IPC, North Carolina Building and Mechanical Codes, and UFC 3-420-01, *Plumbing Systems*. Where the word "should" is used in the manufacturer's recommendations, substitute the word "shall".

D2010 PLUMBING FIXTURES

Provide quantity and type of plumbing fixtures required for the occupancy, use, and functions described for this facility. Refer to Room Requirements Section for additional specific requirements for spaces with plumbing fixtures. Provide handicapped fixtures in accordance with the referenced criteria in the Project Program.

D201001 WATER CLOSETS

Refer to Room Requirement Section for the number and type of water closets required.

Provide floor mounted dual function flush valve water closets in all public and private restroom spaces. Provide manual flush valve for water closets in the sleeping quarters.

D201002 URINALS

Refer to Room Requirement Section for the number and type of urinals required.

All Urinals shall be low flow (less than or equal to 1 gpf). Waterless urinals are not acceptable.

Provide electronic flush valve urinals with transformer and bypass button in all public restroom spaces.

D201003 LAVATORIES

Refer to Room Requirement Section for the number and type of lavatories required.

Provide countertop lavatories in each restroom space. Provide pop-up drain.

D201004 SINKS

Refer to Room Requirement Section for the number and type of sinks required.

D201005 SHOWERS/TUBS

Refer to Room Requirement Section for the number of showers required.

Provide shower floor receptors (compatible with shower materials listed in Room Requirements section) in each Room Plan bathroom, and provide solid surface surround shower enclosures with hot and cold water connections and fittings. The shower heads shall be stationary to keep from spraying toward the shower entrance opening and causing water damage. Refer to MCAS Cherry point mechanical policies for guidance in plumbing issues.

Provide a gear wash area at the ends of the BEQ wings and near the entrances for the purpose of washing boots and other gear. The gear wash area shall be located outside prior to entering the BEQ, and shall be located on a 2.4 meter (8 foot) diameter depressed slab for drainage. The gear wash area shall not be located at the front entrance to the BEQ. The gear wash area shall provide a shower post in the middle of the 2.4 meter (8 feet) depressed drainage slab. The shower post shall be a manufactured item and have 6 shower heads, each equipped with shutoff valves that are easily accessed by personnel for washing gear. The gear wash area shower post shall be approximately 1.8 meter (6 feet)/ high, and be provided with hot and cold water connections and fittings. Provide a drainage pipe in the center of the depressed drainage slab. All external water piping shall be freeze proof in areas prone to freezing.

D201006 DRINKING FOUNTAINS AND COOLERS

Refer to Room Requirement Section for the number and type of drinking fountains and water coolers required.

D2020 DOMESTIC WATER DISTRIBUTION

Perform a flow test to determine system requirements.

A flow test was performed with the following results:

Date:
Time:
Location:
Static pressure:
Residual pressure:
Flow:

D202001 PIPES AND FITTINGS

Provide Copper tubing and fittings for above ground (type L) and buried piping (type K). No pressure tubing except water service entrance and trap primers shall be permitted under the floor slab. Extruded and groove-type pipe and tube fittings shall not be used.

D202002 VALVES & HYDRANTS

Provide isolation valves at domestic supply to each floor. Provide hose bibbs in mechanical rooms and along the building exterior such that all points along the perimeter can be reached with a 100 foot (30 meter) long hose. Provide freeze proof wall hydrants along the exterior in areas subject to freezing. Provide shutoff valves at water supplies to fixtures and provide ease of maintenance as required in the IPC.

D202003 DOMESTIC WATER EQUIPMENT

Provide backflow preventers of types and at points within domestic water systems as specified by IPC. Locate inside the mechanical room on service entrance lines where not provided exterior to the building.

Provide reduced pressure principle type backflow preventer at the service entrance inside the Mechanical Room. Provide strainers on RPZ back flow preventer.

Provide reduced pressure principle type backflow preventer at all make-up water lines inside the mechanical room.

Provide a storage type steam to hot water generator for the heating of domestic water. The steam heat exchanger shall be double wall. The tank shall be glass lined to meet NSF 61. The generator shall meet ASHRAE 90.1, be energy star rated, and stamped to meet ASME boiler pressure vessel code requirements.

Provide base mounted circulator pump for domestic hot water and recirculation distribution system.

Provide individual pulse width water meter with telemetry signal (one per building). Connect to the base EMCS thru the DDC panel. Meters do not necessarily need to be viewable meters, but meters must tie into the EMCS and ITRON suite software via fiber.

The project shall be evaluated by the designer of record in view of meeting EPACT 2005 and the LEED Gold requirement for the project. A life cycle cost analysis shall be performed and prepared for the following along with the primary steam heating of domestic hot water. These items shall be life cycle cost effective. These items shall be considered separately and together:

1. Consider heat recovery for domestic hot water using heat recovery from the chiller. Heat exchangers shall be rated for domestic use and be the double wall type.

2. Provide a solar hot water system for heating domestic hot water.

3. Provide a shower drain heat reclaim heat exchanger for pre-heating domestic cold water side of shower fixture. For all upper stories (2-4th floors) Essentially this involves wrapping the drain line with approximately 5 foot of copper piping that then runs to the cold water side of the shower .

4. Radiant barriers on heat exchanges, tanks, and mechanical equipment and systems.

Provide base mounted circulator pump for domestic hot water distribution system.

Provide domestic water booster system for domestic water distribution system.

Refer to Part 6 for energy saving betterments including solar domestic hot water pre-heating.

D202004 INSULATION & IDENTIFICATION

Provide rigid insulation (polyisocyanurate or cellular glass) with vapor barrier on all domestic water (hot and cold) equipment, supply, and recirculation piping. Provide identification for all piping and equipment. Insulation R- values shall meet or better ASHRAE 90.1-2007.

D202005 SPECIALTIES

Provide washing machine connector box for clothes washers in the laundry room. Provide ice maker connector boxes for refrigerators in the Room Plan service area. Provide valve box for buried valves on the exterior of the BEQ.

D202090 OTHER DOMESTIC WATER SUPPLY

Provide piping supports in accordance with the IPC. Provide inspections, disinfection, and testing in accordance with the IPC.

D2030 SANITARY WASTE

D203001 WASTE PIPE & FITTINGS

Provide cast iron hubless pipe and fittings with rubber compression gasket joints for below ground installations. Provide PVC piping, fittings, and solvent cement for above ground installations. For sanitary waste piping from steam pits, use steel pipe, schedule 80, for handling high temperature hot rain water.

D203002 VENT PIPE & FITTINGS

Provide cast iron hubless pipe and fittings with rubber compression gasket joints or provide PVC piping, fittings and solvent cement.

D203003 FLOOR DRAINS

Provide floor drains in Mechanical room(s), Fire Pump room, Laundry room, plumbing chase areas, and any other areas required to receive condensate from air handling equipment that is not located in the mechanical room. Provide trap primers or deep seal traps on "P" traps that do not regularly receive water. Refer to the Cherry Point mechanical policy regarding trap primer requirements and locations for trap primers.

D203004 SANITARY & VENT EQUIPMENT

Provide sump pump in the elevator shaft pit Provide high temperature sump pumps (electric) in the steam pits for handling rain water in the steam pit. Discharge the condensate to a safe location as indicated on the Civil Engineering plans.

D2040 RAIN WATER DRAINAGE

See section B30 "Roofing" for rain water drainage systems.

To achieve Low Impact Development (LID) and LEED credit(s), provide a complete rainwater management system. The system shall collect, treat, and store rainwater in underground cisterns of suitable capacity. The system shall distribute rainwater as "gray water" in sufficient capacity to achieve the corresponding water efficiency reduction for LEED credit(s). The system shall be designed and installed in accordance with the most stringent requirements from the applicable government criteria, including the requirements / recommendations of the following:

EPA Manual "EPA / 625 / R-04 / 108 September 2004, Guidelines for Water Reuse":
Web Link: http://www.epa.gov/nrmrl/pubs/625r04108.pdf

NCDENR Technical Guidance Stormwater Treatment Credit for Rainwater Harvesting Systems:
Web Link: http://h20.enr.state.nc.us/su/documents/RainwaterHarvestingApproved.pdf

The Texas Manual on Rainwater Harvesting, latest edition:
Web Link: http://www.twdb.state.tx.us/publications/reports/RainwaterHarvestingManual3rdedition.pdf

North Carolina Rules Regarding Water Reuse:
See North Carolina ADMINISTRATION CODE EFFECTIVE April 1, 2001, pages 31 – 36 of 44. See also ENR - ENVIRONMENTAL MANAGEMENT COMMISSION T15A: 02H.0200.

Provide collection system that incorporates necessary filtration system, treatment, dye, and pumps for each BEQ building.

Piping in rainwater systems at MCAS Cherry Point shall be purple in color.

The gray water piping system shall have its own particular identification color and pipe ID code / name. The gray water system will require a potable water back-up for supplement during dry spells. Provide a "first flush" diverter valve prior to the cistern storage tanks primary sediment filter pumps and bypass to the site storm water system in the case of system fill capacity being met. Provide potable water back-up via air gap and a pressure reducing station with level controls in accordance with the plumbing codes, NC building code, NCDENR requirements, North Carolina Administration Code, and EPA requirements.

Refer to Part 6 for energy saving betterments including rain water systems.

--End of Section--

6. ENGINEERING SYSTEMS REQUIREMENTS

D30 HVAC

Refer to Part 5 Section D30 for performance requirements of the building elements included in the HVAC system. All design and installation shall be in accordance to the latest edition of MCAS Cherry Point N.C. Mechanical Policies and the MCAS Cherry Point AE Design guide, (The July 9, 2007 edition of MCAS Cherry Point N.C. Mechanical Policies is included as an attachment in Part 6 of this RFP package.) The MCAS Cherry Point AE Design Guide is found at the Whole Building Design Guide web site under the Construction Criteria Base (CCB) at the following link: http://www.wbdg.org/ccb/browse_cat.php?o=30&c=95.

Provide HVAC and mechanical systems in accordance with UFCs listed for the facilities as well as UFC 3-400-10N, "DRAFT – Design: General mechanical Requirements"; and UFC 3-410-02N, Design: Heating, Ventilating, Air Conditioning and Dehumidifying Systems. Please refer to section Z10 under the Performance Technical Specifications, specifically paragraph 1.2 – Design guidance.All calculations, basis of design, and other design documents shall show and demonstrate how the design strategies will meet the LEED requirements. All design submissions, including calculations, shall show the LEED intent and how it can be met.
Calculations shallinclude ASHRAE 90.1 and EPACT2005 analyses.
In calculations show the energy savingsand efficiencies for the facilities.
Calculations shall provide HVAC system design on psychrometric charts to verify entering and leaving conditions, and final room conditions.
Pressure drop calculations shall provide for allowances for dampers, grilles, balance dampers, coils, circuit setters, heat exchangers, safety factors, etc.
Provide heat transfer equipment with allowances for fouling factors. Calculations shall include energy analysesthat show the new facilities will provide 30% energy efficiency in compliance with the Energy Performance Act (EPACT 2005.)
All facilities shall surpass ASHRAE 90.1 mandatory energy levels by 30%. All mechanical and HVAC system selections shall be justified by life cycle cost analyses. The designer shall submit the LEED, ASHRAE 90.1, and all EPACT 2005 calculations for approval. The latest edition of ASHRAE 90.1 and the ASHRAE 62 User manual shall be used.
The project shall be evaluated by the designer of record in view of meeting EPACT2005 and the LEED Gold requirement for the project. A life cycle cost analysis shall be performed and prepared for the following. These items shall be life cycle cost effective. In addition to meeting EPACT2005, the 30% energy efficiency requirements, and the LEED Gold requirements, consider the following items:

1. Radiant barriers in the exterior wall system and in the attic/roof system.

2. Radiant barriers on mechanical systems and equipment

3. Heat recovery for domestic hot water using heat recovery from the chiller. Heat exchangers shall be rated for domestic use and be the double wall type.

4. Roof mounted Solar heating system for heating DHW. (NAVFAC WASH HQ favors this feature)

5. Shower drain heat exchanger for pre-heating cold water. (2nd floor and above, No underground)

For use with the life cycle cost analyses, obtain the current utility costs from the Contracting Officer.

Refer to Part 6 for list of energy saving betterments .

SYSTEM DESCRIPTION

Provide complete heating, ventilating and air conditioning (HVAC) systems, including all piping, ductwork, equipment and appurtenances for the BEQ's that attain the following objectives: Occupant comfort, Indoor air quality, Acceptable noise levels, Energy efficiency, Reliable operation, and Ease of maintenance. Design and installation shall be in accordance with IMC and UFC 3-400-10N, *Mechanical Engineering*. System type shall be determined based on energy efficiency and life cycle cost analysis. Refer to Building Requirements, Space Tabulations Section of the Project Program for building occupancy levels.
All facilities shall be designed in conformance with the latest editions of ASHRAE Standard 90.1: Energy Standard for Buildings except Low-Rise Residential Buildings, ASHRAE Standard 62: Ventilation for Acceptable Indoor Air Quality, American Conference of Governmental Industrial Hygienists (ACGIH) Industrial Ventilation manual, International Mechanical Code (IMC), North Carolina Mechanical Code, and the International Plumbing Code (IPC). The designer shall also use the latest editions of the User manuals for ASHRAE 90.1 and ASHRAE 62. In addition, the designer shall comply with 2009 Professional Engineer's Guide for ENERGY STAR® Label (included as an attachment in Part 6 of this RFP package).Provide a minimum target of 90. After one year of operation, the contractor and his design agent shall accumulate the required energy usage data and submit applications and obtain the energy Star for each facility. The contractor shall apply the label to each facility and register the facility as ENERGY STAR ® Label facility. All equipment provided shall have the ENERGY STAR ® Label.
Provide a separate and dedicated outdoor air system for each BEQ with total enthalpy heat wheel for energy recovery. The full efficiency of the heat wheel may be used to meet energy efficiency standards. However, equipment must be sized assuming a 50% efficient heat wheel in order to account for the loss in efficiency of the wheel over time.
Provide heat energy recovery from chiller to domestic hot water system. Heat exchangers shall be rated for domestic use and be the double wall type.
Provide building air tightness by reducing the air infiltration through the envelope to 0.25 CFM per building envelope square foot at 0.3 inches water gauge pressure. See D309090 for Building Air Tightness Requirements.
Provide Radiant barriers in the exterior wall system. Optimize the building envelope and window requirements to exceed ASHRAE 90.1-2007.
Provide highest efficiency motors, chillers, and boilers and optimize the HVAC system.
Provide demand control ventilation.
Maximize the duct seal to reduce duct losses. Increase thermal insulation on mechanical systems and utilize radiant barriers to reduce thermal losses.
Direct expansion multi-zone systems, direct expansion variable air volume systems, and thru the-wall units are not acceptable. Economizer cycles shall not be used.
In view of meeting EPACT 2005, ASHRAE 90.1-2007, UFC 3-400-01 (latest versions shall be utilized), and the LEED requirements for this project, a life-cycle cost analysis shall also be prepared for these three HVAC systems. The Designer of Record shall select an HVAC system based upon fully meeting EPACT 2005 and UFC 3-400-01 requirements and the LEED requirements, and favoring the most life-cycle cost effective system. The life cycle cost shall be based on first cost, yearly maintenance cost, energy costs, operating costs, and system/equipment replacement costs. The three HVAC systems vary in first cost and offer corresponding increases in energy efficiency, and they are as follows:

VAV System Description: All conditioned spaces within the BEQ and the laundry room with the exception of all first floor public spaces (e.g. lounge, offices) the Mechanical room, and Fire Pump room shall be heated and cooled by variable air volume (VAV) units with series fan powered boxes. All VAV units shall be provided with hot water reheat coils, shall operate independently, and shall be controlled by wall mounted adjustable temperature sensors. Locate each control for the Living/Sleeping room VAV box in the Sleeping Room. The hot water piping system for the reheat coils shall be designed as a reverse return system. All VAV units shall be accessible for maintenance. Access to VAV units located above

ceilings shall be through lockable and hinged ceiling access panel(s) of sufficient size to allow removal of mechanical equipment without damage or demolition of ceiling. Cooling for the VAV units shall be provided by a chilled water central station VAV air handling unit(s) located in the mechanical room(s). All cooling coil condensate from the VAV air handling unit(s) shall be routed to a floor drain in the mechanical room. Locate mechanical equipment rooms on each floor and in each wing if necessary. Attic space above Multi-purpose room may be used for mechanical equipment if there is suitable access for maintenance purposes. Do not use roof attic above highest story for HVAC equipment. Provide a manually operated volume damper at each VAV supply air discharge and a lockable access door to each damper location. Return air ducts equipped with filter/grille shall be used. Use of ceiling plenums shall not be used for any part of the VAV system. Outside ventilation air for the facility shall be delivered through the VAV air handling unit(s) and shall comply with the latest edition of ASHRAE 62. Maintain a constant volume of outside air ventilation through the central station VAV air handling unit by using an injection fan and a constant volume terminal with a pressure independent velocity controller in order to keep the ventilation airflow constant as the VAV air handling fan modulates.
Ceiling plenum returns shall not be used. All returns shall be ducted.
VAV units for the Room Plan, Corridors and all upper floor (Offices, Corridors, Multi-purpose room, Public spaces and Lobbies) shall be the series fan powered type. Return air back to the VAV boxes shall be through return filter grilles. Provide each Room Plan closet with a minimum 7 L/s (15 CFM) of conditioned supply air. MCAS Cherry Point engineering does not prefer individual room fan coil units.
VAV units for the Laundry room shall be the series fan powered type. No conditioned air from the laundry room shall be returned or transferred to other spaces. Return air back to the VAV boxes shall be through return filter grilles.•

VRF System Description: Variable refrigerant flow (VRF) cooling and heating systems with multiple packaged outdoorheat recovery units with digital variable speed scroll compressors and multiple split indoor evaporators with simultaneous heating and cooling capability using heat recovery and supplemental hot water coil. Provide primary/secondary pumping for hot water loops with condensing boilers. Provide a separate and dedicated 100% outdoor air conditioning system feeding air to each individual zone/space using direct expansion (DX) cooling, hot water heating, pre-heat and reheat using hot water, and energy recovery from exhaust air using total enthalpy heat wheel. Hot water heating will be provided by indirect gas fired boilers. VRF systems shall meet ASHRAE 15 and 34 standards. Refrigerant systems shall meet ASHRAE 15 and 34 standards, International Mechanical Code, and North Carolina NC Mechanical Code. System design shall ensure the refrigerant volume of a system does not exceed the refrigerant concentration limit per unit volume as defined in ASHRAE 34 and the NC Mechanical Code for the smallest occupied space. In addition, and if used, VRF systems shall be designed and installed in accordance with the detailed requirements included under heading D309090 of this ESR section.

GSHP System Description: • Geothermal well field with condenser water loop serving ground-source heat pumps(GSHP) located throughout the facility. Supplemental heated hot water as required to support condenser water temperatures during the heating season. Utilize a closed circuit cooling tower to supplement the ground source condenser water during the cooling season. Provide a separate and dedicated 100% outdoor air conditioning system feeding neutral air to each individual zone/space using GSHP, hot water heating, pre-heat and reheat using hot water, and energy recovery from exhaust air using total enthalpy heat wheel. Hot water heating will be provided by indirect gas fired condensing boilers. Provide primary/secondary pumping for hot water loop. Ground source heat pumps and associated systems shall meet Unified Facilities Guide Specifications (UFGS) Section 23 81 47 “WATER-LOOP AND GROUNDLOOP HEAT PUMP SYSTEMS” The contractors shall determine the general geothermal well field size and location that best meet the site requirements and shall come up with their own estimates of well field size for the purpose of bidding. The well field shall fit within the site and not impede on adjacent sites or future development planned for those sites. In addition, and if used, the geothermal well field shall be designed and installed in accordance with the detailed requirements included under heading D309090 of this ESR section. As a minimum, the ground source heat pump well depth shall meet North Carolina well requirements and

shall be fully permitted. Each well shall have its own NC State well permit. Each well shall be fully grouted from top to bottom in accordance with North Carolina requirements and the well depth shall comply with North Carolina well requirements. Each well shall have a minimum thermal diameter influence of 20 feet, meaning the well spacing between wells shall be a minimum of 20 feet. Each well shall not exceed one ton of cooling. For the purpose of life cycle cost analysis, assume one ton of cooling per 150 feet deep well. If this system is selected, contractor shall provide in-Situ testing to determine heat transfer characteristics of the soil and potential well output. Contractor shall provide in-Situ testing to determine heat transfer characteristics of the soil and potential well output. Provide a minimum of 4 in-Situ test well-field locations per building and at least one test well per well-field location.

All of the following system requirements shall be met:

Provide heating, ventilating, and air conditioning (HVAC) systems for the BEQs that attain the following objectives: Occupant comfort, Indoor air quality, Acceptable noise levels, Energy efficiency, Reliable operation, and Ease of maintenance. Design and installation shall be in accordance with IMC-latest edition and UFC 3-400-10N, *Mechanical Engineering*. Refer to Building Requirements, Space Tabulations Section of the Project Program for building occupancy levels.

All facilities shall be designed in conformance with the latest editions of ASHRAE Standard 90.1: Energy Standard for Buildings except Low-Rise Residential Buildings, ASHRAE Standard 62: Ventilation for Acceptable Indoor Air Quality, American Conference of Governmental Industrial Hygienists (ACGIH) Industrial Ventilation manual, International Mechanical Code (IMC), North Carolina Mechanical Code, and the International Plumbing Code (IPC). The designer shall also use the latest editions of the User manuals for ASHRAE 90.1 and ASHRAE 62.

Any combination of equipment that attains these goals, and meets the requirements outlined below, will be acceptable.

All equipment shall be accessible for maintenance. Coordinate with Architect to provide access at all locations to facilitate future repairs. Provide door/stairs/ladder access big enough to replace any equipment MCAS Cherry Point engineering would like for the Air Handlers to be located either in a mechanical room on each floor or above the common area. Recommend not locating any large air handlers in upper floor attic spaces which would necessitate fire pumps.

Direct expansion multi-zone systems, direct expansion variable air volume systems, and thru-the-wall units are not acceptable. Economizer cycles shall not be used.

Ventilation Systems: Outside ventilation air for the BEQ shall be provided by an independent and dedicated ventilation system(s), and shall comply with the latest edition of ASHRAE 62. Maintain a constant volume of outside ventilation air to each Room Plan and all other spaces. Each Room Plan shall be provided with a minimum of 19 L/s (40 CFM) of ventilation air. Ventilation air to each space shall exceed room exhaust air by a minimum of 15%. Provide an independent and dedicated ventilation system for the Multi-purpose room. The ventilation system for the Multi-purpose room shall be controlled via CO2 sensor(s). The ventilation systems shall preheat, cool, and reheat to neutral conditions all outside ventilation air prior to entering a space. Locate mechanical equipment rooms throughout the BEQ as necessary. Attic space may be used for mechanical equipment if there is suitable access for maintenance purposes. All cooling coil condensate from the dedicated ventilation system(s) shall be routed to a floor drain.

Air Handling Units for the Room Plans, Offices, Multi-purpose room, Public spaces, Lobbies, and Corridors shall return air back through filter grilles. Provide additional filter in the Air Handling Unit (s). Provide each Room Plan closet with a minimum 7 L/s (15 CFM) of conditioned supply air.

Air Handling Unit(s) for the Laundry room shall return air back to the fan through filter grille(s). No conditioned air from the laundry room fan coil unit(s) shall be returned or transferred to other spaces.

The Telecommunication/Data/NMCI room shall be cooled only via a direct expansion ductless split cooling unit. Provide minimum base ventilation rates as defined by the latest edition of ASHRAE 62. The minimum base ventilation rate for this space shall be provided by an adjacent air system from another space.

Exterior air-cooled Chiller(s) system (one per BEQ building) shall be provided for chilled water to the chilled water coils, and a Steam to hot water convertor system shall be provided for the hot water coils.

A separate steam mechanical room shall be provided for all steam equipment, piping, pressure reducing stations, etc. The steam room shall be isolated from the rest of the facility, including the mechanical room, to prevent steam and condensate from entering the facility in the event of a leak.

Exhaust Systems: Provide continuous exhaust air for the Room Plan bathrooms, Laundry room, Janitor's room, Public Head, and Duty Office Head. The exhaust air for these spaces shall be part of a central exhaust system that shall route all exhaust air through an energy recovery wheel to exchange heat between the outgoing exhaust air and the incoming ventilation air. Continuous exhaust air for the Room Plan bathrooms shall be 17 L/s (35 CFM). Continuous exhaust air for the Public Head, Duty Officer Head, and Janitor's room shall be 24 L/s (50 CFM). Static pressures for these spaces shall be negative as compared to adjacent spaces.

Energy Recovery System: Provide total energy (enthalpy) type energy recovery wheels (heat wheels) in the air handling system for recovering energy between the outgoing exhaust air and the incoming ventilation air. The total enthalpy heat wheel(s) shall be located in the mechanical room or the attic space, and shall be easily accessible for maintenance.

Mold and Mildew: The BEQ shall have no evidence of mold or mildew due to condensate or other moisture on any indoor or interior surfaces after one year of service or facility operation.
The contractor shall provide a one year warranty for no mold or mildew after the facility has been accepted.

GENERAL SYSTEM REQUIREMENTS

Provide working space around all equipment. Working space shall meet OSHA requirements. Working space shall allow space to perform maintenance functions as well as to pull coils, pumps, heat transfer surfaces, valves, valve operators, dampers, pipes, wiring, and conduit. Provide all required fittings, connections, and accessories required for a complete and usable system. All equipment shall be installed per the criteria in PTS Section D30 and the manufacturer's recommendations. Where the word "should" is used in manufacturer's instructions, substitute the word "shall".

Provide air conditioning and heating for spaces as indicated and for the following Design conditions:

Outside-Conditions

Summer	90.0	Degrees F dry bulb	Winter	23.0	Degrees F
	32.2	Degrees C dry bulb		-5	Degrees C

	79.0	Degrees F wet bulb			
	26.1	Degrees C wet bulb			

Inside-Conditions

Summer	75	Degrees F dry bulb	Winter	68	Degrees F
	23.8	Degrees C dry bulb		20	Degrees C
	50	%RH			

Storage Room and Restroom Inside-Conditions

Summer	75	Degrees F dry bulb	Winter	68	Degrees F
	25.6	Degrees C dry bulb		20	Degrees C
	50	%RH			

Heating and Ventilating Inside-Conditions

Summer	10	Degrees F dry bulb above outside ambient	Winter	55	Degrees F
	5.6	Degrees C dry bulb above outside ambient		12.8	Degrees C

	15	Air changes per hour minimum			Note: Ventilation rate shall be 10 degrees above outside ambient or 15 air changes per hour whichever has the higher rate

Provide outside air ventilation rates and systems per the latest edition of ASHRAE Standard 62, *Ventilation for Acceptable Indoor Air Quality,* or the North Carolina Mechanical Code (based on the International Mechanical Code), whichever is more stringent. Precondition (heat, cool, and dehumidify to room conditions) all outside air prior to admission into occupied spaces. Provide supply (positive pressure) ventilation for the mechanical room if it contains fuel-fired equipment, and exhaust ventilation for the electrical room to limit the temperature to no more than 10 degrees F above ambient or 15 air changes per hour, whichever has the higher ventilation rate. Provide supply and exhaust ventilation for the mechanical room if there is no fuel-fired combustion equipment present. Ventilation for the mechanical room shall also be in accordance to ASHRAE 15, Refrigeration Standards for Refrigeration Systems where required.

Provide separate units for the mechanical and electrical rooms with to deliver enough air to pressurize and maintain a temperature of approximately 80° F in the space.

The Mechanical Room and Fire Pump Room shall be heated with hot water unit heater(s) and controlled by a wall mounted thermostat.

The Electrical Room shall be heated by electric unit heater(s) and controlled by a wall-mounted thermostat.

The HVAC system for the BEQ shall provide each zone with the choice of heating or cooling year round unless otherwise indicated. Each zone shall have its own limited range of control, as allowed by the control system central workstation.

Zone the HVAC system as follows:

Each Room Plan shall be a separate zone.

Each Office shall be a separate zone.

The Laundry Room shall be a separate zone.

The Multi-Purpose Room shall be a separate zone.

Corridors shall be separate zones.

The Telecommunication/Data/NMCI room shall be a separate zone.

Public Restrooms shall be separate zones.

The Fire Pump room, Mechanical room, and the Electrical room shall each be a separate zone, heated and ventilated only.

Special Zoning Requirements:

HVAC cooling capacities shall handle all sensible and latent space loads, including but not limited to coffee machines, human occupants, printers, fax machines, personal computers, audio equipment, laptops, and televisions.

Noise levels shall comply with the requirements for Hotels/Motels in the ASHRAE Applications Handbook.

Equipment Requirements:

Material and Equipment Qualifications: All materials and equipment shall have been in satisfactory commercial or industrial use for 2 years prior to the bid opening. The 2-year use shall include applications of equipment and materials under similar circumstances and of similar size. The product shall have been for sale on the commercial market through advertisements, manufacturer's catalogs, or brochures during the 2-year period.

Motors: Single-phase fractional-horsepower alternating-current motors shall be high efficiency types corresponding to the applications listed in NEMA MG 11. Select polyphase motors based on high efficiency characteristics relative to the applications as listed in NEMA MG 10. Additionally, all polyphase squirrel-cage medium induction motors with continuous ratings shall meet or exceed energy efficient ratings per Table 12-10 of NEMA MG 1. Provide controllers for 3-phase motors rated 0.75 kW (1 hp) and above with phase voltage monitors designed to protect motors from phase loss and over/under-voltage. Provide means to prevent automatic restart by a time adjustable restart relay. For packaged equipment, the manufacturer shall provide controllers including the required monitors and timed restart. Provide reduced voltage starters for all motors 25 hp and larger.

Provide a minimum 100 mm (4-inch) high housekeeping pads and vibration isolators under all floor-mounted equipment. Secure all floor mounted mechanical equipment to the concrete housekeeping pads.

All outdoor mechanical equipment shall have painted finishes that pass a salt-spray test conducted per ASTM B117 for duration of at least 3000 hours.

All equipment shall be installed per the manufacturer’s recommendations and meet or exceed the ASHRAE 90.1 requirements, Energy Star or Federal Energy management Program (FEMP) recommended efficiencies. Provide calculations and equipment selections showing how the energy efficiency requirements and LEED strategies will be met.

Pressed type, extruded type, and groove type and tube fittings shall not be used on any HVAC piping system.

D3010 ENERGY SUPPLY

D301003 STEAM SUPPLY SYSTEM (FROM CENTRAL PLANT)

Refer to Section G304005 Underground Steam Systems, and G304005 Reinforced Concrete Manholes and Valve Boxes, *Site Civil / Mechanical Utilities* for relocated steam pits. Coordinate with Civil contractor.

An existing relocated central steam distribution system shall be the source of heating for the BEQ facilities. The existing steam distribution is underground. The existing underground steam and condensate line at the site shall be relocated around the new facilities, see G10 and G30. The

existing system consists of steam and pumped condensate. Provide a new underground steam and pumped condensate system and connect to the existing underground system. Provide extension and connection to the existing underground Base steam and pumped (D3020 HEAT GENERATING SYSTEMS) condensate system. Provide below ground piping system including manholes and supports. Provide a steam manhole or pit for the new facilities. Provide new steam pits. Provide new steam pits to replace the existing steam pits that were removed. See also G10 and G30.

Steam piping and equipment shall be provided in a self-contained “Steam Mechanical Room.” Piping penetrations from this room into the BEQ facility shall be tightly sealed to prevent steam from leaving the steam mechanical room in the event of a steam or condensate pipe rupture. The steam mechanical room or manhole shall not have any water utility system in them.

Provide a steam pressure reducing station that shall reduce the steam pressure to 103 kPa. The pressure reducing station shall have two parallel pressure reducing valves with bypasses and valves. One pressure reducing valve shall be sized for 2/3 capacity and the other sized for 1/3 capacity. Provide globe valve bypasses. Provide a safety valve relief with the relief vent discharging through the wall. Provide a drain line from the relief valve vent pan. Provide low pressure steam to all steam to water heat exchangers for heating water and to the storage type steam-to domestic hot water generator.

All steam heat transfer equipment shall be sized for the superheat effect caused by the pressure reduction of steam (constant enthalpy process) at the pressure reducing valves. The amount of superheat effect shall be included in the design of the heat transfer equipment and shall be shown in the calculations.

Provide steam-driven condensate return units (Pressure powered pump).

Provide steam meter with pulse width reader and telemetry signal compatible with Base reader.

No steam-related mechanical equipment shall be installed in other mechanical rooms. The other mechanical rooms shall be used for air handler units that are provided with hot and chilled water coils.

The Steam Room shall have double doors to the outside.

The heating load for this facility shall be served by a steam to hot water convertor providing 100 % of the facility heating load. The converter shall generate 100% of the hot water for the HVAC system.

D302004 AUXILIARY EQUIPMENT

Provide a storage type steam to domestic hot water generator (steam heated water tanks). The generator shall have a double wall steam exchanger. The generator shall use Base central steam system to generate 100% of the hot water for the HVAC and plumbing systems. See section D20 and D30 for requirements. The storage type hot water generator shall be located in the steam mechanical room.

Provide steam driven condensate return units / pressure powered pump.

D302005 EQUIPMENT THERMAL INSULATION

Provide insulation for steam system equipment, steam to hot water converters, hot water pumps and other associated heating equipment.

D3030 COOLING GENERATING SYSTEMS

D303001 CHILLED WATER SYSTEMS

If selected by the LCCA, Provide exterior high-efficiency air-cooled chillers (one per BEQ building) using a primary/secondary pumping system with variable speed secondary pumping. The cooling load for each facility shall be served by 1 chiller providing 100 % of the load. Provide 100% stand-by pumps for all chillers/ chiller plant. The air-cooled chiller(s) shall be located outside on a 150 mm (6 inch) thick reinforced concrete housekeeping pad. Provide heat tape for freeze protection of chilled water piping and any other associated appurtenances. Refer to the MCAS Cherry Point mechanical policy for the requirements for phase and voltage protection requirements for chillers.

Total chilled water system volume shall be a minimum of 7 gallons per ton of cooling. Provide an insulated Inertia type storage tank within the mechanical room in order to meet this requirement. Provide thermal mass capability in the chilled water system to insure proper control and longevity of chillers by using inertia tanks.

Chiller(s) shall operate in temperatures down to 20 degrees ambient exterior temperatures.

Provide factory corrosion protection coating for air-cooled water chiller coils.

Provide heat recovery for reheat.

Provide insulation on and vapor barrier on all chilled water equipment.

Provide complete field start-up and operational performance testing of chiller equipment.

D303002 DIRECT EXPANSION SYSTEMS

Provide a dedicated air-cooled direct expansion (DX) ductless split system cooling only unit for the NMCI/Data/Telecom space. Provide with a wall mounted adjustable thermostat.

Provide minimum acceptable efficiencies to surpass ASHRAE 90.1 mandatory energy levels by 30%. The designer shall submit the ASHRAE 90.1-2007 calculations.

D3040 DISTRIBUTION SYSTEMS

D304001 AIR DISTRIBUTION, HEATING & COOLING

Provide insulated, galvanized steel, double wall, pre-insulated ductwork constructed, braced, reinforced, installed, supported, and sealed per the IMC and SMACNA standards for any and all exposed supply and return ductwork in finished spaces. All non-exposed HVAC ductwork shall be insulated, galvanized steel, braced, reinforced, installed, supported, and sealed per IMC and SMACNA standards.

If selected by the LCCA, Provide air volume balance dampers in all branch ducts and on the low pressure side of the VAV system after the VAV units. All air volume balance dampers shall be accessible. If air volume balance dampers are located above hard ceilings (i.e., plaster, etc.), provide lockable access panels to allow adjustment of dampers.

Provide aluminum grilles, registers, and diffusers.

If selected by the LCCA, All Series Fan Powered Variable Air Volume (VAV) units shall have ducted returns with aluminum filter return grilles.

D304003 HOT WATER DISTRIBUTION SYSTEMS

For exterior-buried Hot Water Distribution Systems see Section G30.

Provide a variable speed pumping system to serve the HVAC hot water equipment throughout the facility. Provide insulated (rigid insulation) steel or copper hot water supply and return piping to serve the HVAC equipment throughout the facility.

Provide complete start-up and operational testing of all hot water and steam systems.

Provide flushing, cleaning, and start-up of hot water systems. All steel hot water piping shall be painted and shall have a solid separator.

D304006 CHILLED WATER DISTRIBUTION SYSTEMS

For exterior-buried chilled water distribution systems, coordinate with Section G30.

Provide a primary/secondary pumping system with variable frequency drive to serve the HVAC equipment throughout the facility only on secondary chilled water pumps.

Provide insulated (cellular glass rigid insulation) steel or copper chilled water supply and return piping to serve the HVAC equipment throughout the facility. All steel chilled water piping shall be painted and have a solids separator.

Provide Cellular Glass insulation on all above ground chilled water distribution piping.

Provide valves and related chilled water system appurtenances.

Provide air control and chemical treatment equipment for the chilled water system.

Provide thermal mass capability in the chilled water system to insure proper control and longevity of chillers by using inertia tanks. Provide inertia tanks, sized per chiller manufacturer recommendation.

Provide system flushing and start-up for chilled water system. Provide for piping exposed to outdoor ambient temperatures and provide heat tracing to ensure freeze protection down to 10 degrees F.

D304007 EXHAUST SYSTEMS

Provide ductwork constructed, braced, reinforced, installed, supported, and sealed per the IMC and SMACNA standards. Ducts shall have leakage Class “A”. Perform DALT testing on all ducts.

Central Exhaust System: Provide a ducted central exhaust ventilation system(s) and exhaust fan(s) to serve all ventilated zones of the facility. Provide in-line centrifugal exhaust fan(s) for the BEQ central exhaust system. The BEQ central exhaust system shall capture all Room Plan bathroom, Laundry room, and other space exhaust air, and route it through a total energy (enthalpy) type energy recovery wheel (heat wheel) before exiting the BEQ in order to gain heat transfer between the incoming ventilation air and outgoing exhaust air. The central exhaust system ductwork may be routed through a chase adjacent to the Room Plan showers as shown on attached sketches in part three of the project program.

Multi-Purpose Room Exhaust System: Provide an additional inline centrifugal exhaust fan in the multi-purpose room that is interlocked with the Multi-purpose room dedicated ventilation system. The Multi-purpose room exhaust fan shall discharge to the outside all ventilation air and balance system.

Provide a positive pressure in the Multi-purpose room in accordance with ASHRAE recommendations.

Stacked Dryer Exhaust System: Exhaust air from the stacked dryers in Laundry room shall discharge outside. Provide a dryer plenum/chase area as shown on the attached sketches. Dryer exhaust ducts shall route through dryer plenum/chase area to an exterior intake/exhaust louver. Dryer intake air shall be drawn into the dryer plenum/chase area through the exterior intake/exhaust louver and enter the rear of the dryers. This method prevents the need for conditioning dryer makeup air.

D304008 AIR HANDLING UNITS

Provide multiple chilled water central station split system, and air handling unit(s) to serve the BEQ. (1 per floor/wing for easy maintenance). The central station air handling unit(s) shall deliver conditioned air to the units at a constant temperature of 12.8 degrees Celsius (55 degrees Fahrenheit). Provide the central station air handling unit(s) with a hot water coil for pre-heating the outside ventilation air if necessary and provide with 35% filters.

Provide separate and independent constant volume air handling unit(s) to serve the ventilation requirements of the BEQ. The ventilation air handling unit(s) shall be provided with hot and chilled water coils, and shall preheat, dehumidify, and reheat ventilation air to neutral conditions prior to delivery within the BEQ. Neutral conditioned air is defined as air that is 21 degrees Celsius (70 degrees Fahrenheit). All incoming outside ventilation air shall be routed through a total enthalpy heat wheel prior to entering the air handling unit(s) in order to exchange heat between the exhaust air and ventilation air. Provide the ventilation air handling unit(s) with 35% filters.

D304090 OTHER DISTRIBUTION SYSTEMS

Provide base-mounted circulating pumps with variable frequency drives.

Provide chemical treatment systems for the hot and chilled water systems.

D3050 TERMINAL & PACKAGE UNITS

D305002 UNIT HEATERS

Provide hot water unit heater(s) to serve the heating requirements of the Mechanical and Fire Pump rooms.

D305005 ELECTRIC HEATING

Provide electric unit heaters for heating the electrical room space.

D3060 CONTROLS AND INSTRUMENTATION

D306001 HVAC CONTROLS

D306001-1.1 DIRECT DIGITAL CONTROLS (DDC)

Provide a complete Direct Digital Control (DDC) system for the facility. Provide a DDC system which will communicate all control points with the existing base wide Energy Monitoring and Control (EMCS) System.

Connect to EMCS via the Station fiber backbone. All building controllers must be compatible with the front end JCI Metasys equipment. Performance verification shall be conducted from the server located in Bldg 87.

Provide complete direct digital control (DDC) systems which will all control points communicate with the existing DDC/EMCS system. The existing centralized MCAS Cherry Point DDC system was manufactured by Johnson Controls and is the Johnson NAE system. The DDC systems shall be fully-compatible with and shall fully-communicate with the existing Johnson NAE system (the MCAS Cherry Point Public Works Design Branch will be involved in programming their central control system to monitor the facilities via LAN connections). The systems shall utilize electronic equipment controllers. The DDC system serving the facilities shall be designed to fully, automatically restart any and all HVAC systems in the event of power outages. Provide battery back-up on all DDC control panels.

A central DDC terminal located in the Mechanical Room shall monitor all control points within the facilities. Control set points shall be available for resetting in the following three ways: (1) in the Mechanical Rooms of the respective facilities, (2) at the central DDC terminal, and (3) via the centralized MCAS Cherry Point DDC system. The existing Energy Management and Control System (EMCS) at MCAS Cherry Point is an enterprise system that actively receives energy and building condition information from multiple sources and provides load shedding, electric metering, alarming, trending, scheduling, set point adjustment, device communications status of all SBC and TCU for maintenance personnel. This EMCS receives Real Time Pricing utility data and automatically manages to this site's base load profile. Provide a complete fully BACnet Open Protocol compatible Direct Digital Control (DDC) system. The DDC system shall be capable of controlling and monitoring all spaces and all HVAC systems. The manufacturer's control system shall have a successful, proven, in use history of at least 2 years. The DDC control system object configuration and communication shall be totally native BACnet Open protocol with no other programming language protocol, interface, or gateways utilized, except as required by the Project documents. Modify existing DDC systems including associated equipment and accessories. Manufacturer's products, including design, materials, fabrication, assembly, erection, examination, inspection, and testing shall be in accordance with ASME B31.1 and NFPA 70, except as modified herein or indicated otherwise. Provide the DDC systems to maintain stable temperature control and all other conditions as indicated. The end-to-end accuracy of the system, including temperature sensor error, wiring error, A/D conversion, and display, shall be 1 degree F or less. Provide a supervisory building controller (SBC) and license files to allow communication between the DDC system and the station's existing EMCS system. The existing station EMCS system is Johnson Controls and incorporates Metasys Extended Architecture Engine (NAE) System that communicates over the Facility maintenance Ethernet communications network. The existing EMCS Central server is located at MCAS Cherry Point. Provide all necessary hardware, drivers, software, material, and equipment, which shall allow communication between the SBC and DDC upper level controllers. Provide an N2 building bus capable of connecting to an N1 Ethernet TCP/IP Level 1 network. The new DDC system naming nomenclature shall be compatible with the existing Johnson Control system. The new DDC system via the site building controller shall be capable of upload/download from the central server at MCAS Cherry Point. The existing Johnson Control system shall have the capability to load-manage the new DDC system.

Provide sufficient quantity of digital controllers to perform all climate control, energy management, and alarm functions. All material used shall be currently in production. Subject to the preferences of MCAS Cherry Point Public Works, the contractor shall update the existing Johnson Controls server at MCAS Cherry Point to incorporate and integrate the new DDC system. The update requirements include but are not limited to: graphics control package of the new DDC system and programming of all load management functions. The contractor shall fully test and verify all levels of control and communication of all the DDC system controllers from the Johnson Controls EMCS server at MCAS Cherry Point. In the event MCAS Cherry Point Public Works decides to carry out (on their own) any of the requirements of this paragraph, the contractor shall be free from said requirements. The SCIF area ambient conditions shall be monitored continuously for overheat and extreme humidity

conditions. In addition to normal alarm reporting, alarm signals shall be sent to user-designated telephone numbers of pertinent base personnel.

Provide electronic controls for remote, terminal HVAC equipment. The entire DDC system shall be designed in accordance with the EMCS Equipment and Points Nomenclature for MCAS Cherry Point (included in Part 6 Attachments).

In addition, the following requirements shall be met for the facilities: Provide a complete Direct Digital Control (DDC) system for the facility's HVAC systems. The DDC system shall be accessible from the Internet. Provide a front-end web-connected CPU or server. If a CPU is used, mount it in a locked, power-ventilated cabinet adjacent to the building front-end control panel(s). Provide the CPU or server with a battery backup UPS device. Locate UPS devices in a separate locked, power-ventilated cabinet. Locate all front-end DDC equipment in a clean, temperature-controlled, computer friendly environment. All DDC controllers, CPU's, servers, workstations, and interface devices provided shall comply with and communicate using the ASHRAE Standard 135-2004, BACnet Protocol for Building Automation and Control Networks. The DDC system shall use BACnet objects and properties for all physical inputs and outputs, and BACnet read and write services for all network communications and device-to-device algorithms. Coordinate the BACnet network and device addressing with the Government BAS owner to ensure unique addresses. Provide BACnet Product Information Conformance Statements (PICS) for each DDC controller and BACnet device. The controls sub-contractor for this project shall be regularly engaged in the design and installation of BACnet DDC systems (for building HVAC systems) similar to the size and scope of this project, shall have been a representative of the proposed control system manufacturer for a minimum of two years, have a staffed office within a 50-mile radius of the project location, and shall have performed design and installation of DDC systems for a minimum of 5 years. The controls sub-contractor shall ensure that their installing electricians have a copy of, read, and understand the mechanical sheets of the contract's design construction drawings, in addition to the control drawings prepared by the sub-contractor. Provide the DDC programming and graphics using Standard English units of measure, not metric. The control system shall be completely electric/electronic, no pneumatics. Provide DDC programming to modify, alarm, trend, schedule, override, and view device parameters via direct connection. Provide DDC programming remotely via telephone line or LAN connection. Provide DDC programming routines in simple, easy-to follow logic. Provide detailed text comments describing each routine.

In addition, provide each routine screen with its applicable as-built written sequence of operation. Design control drawings shall include the following:

1. Detailed control system scope-of-work and installation notes describing the various components that will be provided (controllers, sensors, valves, dampers, etc.).

2. A diagram of the control system communication architecture, including network and device addressing.

3. Control valve and control damper schedules, including actuators and linkages.

4. DDC point schedule including point description, point type (BI, BO, AI, or AO), alarm requirements, trend requirements, and additional information such as type of sensor, location, etc.

5. A detailed control diagram for each piece of HVAC equipment receiving DDC. Diagrams shall show all related control components in their respective locations, valve and damper normal positions, fluid flow directions, and point types (BI, BO, AI, or AO).

6. A detailed written sequence of operation for each piece of HVAC equipment. Fully describe every operating routine (occupied operation, night setbacks, optimal start, etc.).

Show floor plans in the DDC graphics to scale. Where feasible, use the project's AutoCAD design drawings, purged of extraneous detail. Each piece of HVAC equipment shall be controlled by the DDC. Do not provide hard-wire interlocks between fans or pumps. Provide software interlocks instead. However, freeze protection thermostats, duct smoke detectors, and other safety type devices shall be hard-wire interlocked with their associated piece of HVAC equipment.

Provide each piece of HVAC equipment with a hand-off-auto switch. The hand position shall energize the equipment directly under all conditions except activation of a freeze protection thermostat, duct smoke detector, or other safety type device. Ensure safety conditions also de-energize equipment in the auto position. Where feasible, provide air handlers and terminal units with discharge/supply air temperature sensors.

Operate the building circulating pumps serving hot and chilled water loops whenever the outdoor air temperature is below 35 deg. F. Provide control routines to automatically start back-up pumps (or other HVAC equipment) if the primary device fails. Rotate primary and back-up HVAC equipment monthly with a lead/lag control routine. Start/stop pumps via the DDC, not the chiller controller. Provide reset routines (based on outdoor air temperature or zone demand) for hot and chilled water loop temperature set points. Provide meters monitored by the DDC on the building's incoming propane, water, and electric utilities. Set up trend reports to record data daily and store values in the front-end DDC computer. Provide flow rate meters monitored by the DDC for central hot and chilled water flows and central air handling unit air flows. When not used for direct control, provide wall mounted carbon dioxide and relative humidity sensors in strategic occupied spaces for monitoring purposes.

Provide hot water and chilled water valve actuators that fail open to the coil via a spring return. Provide each actuator with a self-locking male/female quick-connect type plug in the wiring serving each valve operator, for emergency use, to allow manually disconnecting power to the device, sending it to its fail position (without disrupting any other unit control). Locate each plug exposed in plain view. Provide chilled water control valve actuators and linkages that can be easily and fully insulated and vapor sealed at the valve connection.

Provide alarms for the DDC points. Provide point cross-referencing, time delays, and differentials to prevent nuisance alarms. Analyze the alarms after the system is in operation and make additional adjustments to reduce/eliminate nuisance alarms. Trend all possible data points. Where possible, provide trends based on change-of-value for sensor readings, motor statuses, and actuator positions. Once the trend buffer is full, the oldest data will be purged from the list when new data is added. Store the maximum amount of data feasible. Provide trend reports for each DDC point after the system has been in operation and collected its buffer of data points. Analyze the trends for anomalies, inconsistencies, and operating problems such as equipment running when it is not supposed to, valve-hunting, inability to maintain set point, and incorrect start-up or shut-down sequences. The final DDC system Operation & Maintenance manuals shall include as-built drawings of the DDC communication wiring in the building showing the exact installed configuration/routing of the communication wiring daisy chain, including LAN's, switches, routers, and addressing exactly as installed.

Provide at least one registered copy (on mfr's original CD) of the control system software. If a hardware key is required, provide the manufacturer's largest capacity "master" key, allowing full access to the maximum number of controllers. Provide a minimum of six additional "technician level" hardware keys for distribution among the naval base mechanics and their laptop computers. If the control manufacturer uses software keys or registered "seats" instead of hardware keys, provide a minimum of six registered software seats, in lieu of keys. Regardless of the control manufacturer and its software license protection method, the Government shall receive the manufacturer's complete software, at least one full-access capability, and at least six limited-access capabilities.

For the DDC system provided under this contract, include at no additional cost to the Government, all firmware and system software upgrades (including patches and updates) as they become commercially available for a minimum of two years starting from contract acceptance. In the submitted control system O&M manuals, provide an itemized list of the firmware and system software. Include original release dates, version numbers, part numbers and serial numbers, and beginning and ending warranty dates. Provide a statement that firmware and system software upgrades shall be provided without cost during the two-year period. Provide an additional statement that the manufacturer's telephone technical support shall be provided without cost for five years from contract acceptance. The control system manufacturer shall provide toll-free telephone technical support at no additional cost to the Government for a minimum of five years from contract acceptance. Technical support shall be furnished by highly experienced service technicians of the controls manufacturer, and be available during normal weekday working hours. Include the toll-free technical support telephone number in the contract's control submittals. Absence of toll-free post-acceptance telephone technical support shall be sufficient reason for disapproval of a proposed control system manufacturer.

D3070 SYSTEMS TESTING AND BALANCING

Provide complete Testing and Balancing (TAB) of all air and water distribution systems and HVAC equipment. Provide complete Duct analysis leakage testing (DALT) of all air distribution systems.

D307003 HVAC COMMISSIONING

Provide Level 2 commissioning for all HVAC systems. Coordinate with the HVAC commissioning requirements of Section 01 91 00 Commissioning, and Section 01 33 29 LEED Documentation, for commissioning requirements for all HVAC systems. Refer to Part 3 section 2.2.1.1 for Building Commissioning requirements. Systems to be commissioned, if provided, include HVAC systems and controls, refrigeration systems and controls, renewable energy systems, and domestic hot water systems.

D3090 OTHER HVAC SYSTEMS AND EQUIPMENT

D309001 GENERAL CONSTRUCTION ITEMS

Provide seismic restraints and Comply with the Force Protection Criteria, including UFC 4-010-01, DOD Minimum Antiterrorism Standards for Buildings. Provide an antiterrorism/force protection (AT/FP) switch which shall de-energize all the air systems in the facilities. The AT/FP switch shall be a fire alarm Type-2 position toggle switch (labeled HVAC). When the glass is broken and the switch is turned to the "off" position, the air systems shall be turned off. Equipment shall be manually reset. Provide intake louvers and other louvers to be a minimum of 10 feet above the finished floor.

D309090 OTHER SPECIAL MECHANICAL SYSTEMS

Provide total energy (enthalpy) type energy recovery wheels (heat wheels) in the air handling system. Route outgoing exhaust air and incoming ventilation air through the enthalpy heat wheel.

Refer to Part 6 for list of energy saving betterments.

-- End of Section --

6. ENGINEERING SYSTEMS REQUIREMENTS

D40 FIRE PROTECTION

Refer to Part 4 Section D40 for performance requirements of the building elements included in the fire protection systems.

SYSTEM DESCRIPTION

Provide integrated fire alarm/mass notification systems (FA/MNS) and fire suppression systems capable of notifying building occupants and controlling any fire that may start inside each building.

GENERAL SYSTEM REQUIREMENTS

Provide working space around all equipment. Provide concrete pads under all equipment. Provide all required fittings, connections, and accessories required for complete and usable systems. All equipment and components shall be installed per the criteria of PTS section D40 and the manufacturer’s recommendations. Where the word "should" is used in the manufacturer's recommendations, substitute the word "shall". All design and construction shall comply with applicable UFC’s including, but not limited to, 3-600-01, 3-600-10N, and 4-021-01.
All Design Documents, (i.e. Building Code/Life Safety Analysis, plans, specifications, and calculations) developed for Section D40 shall be prepared by, or under the supervision of the design/build contractor's Qualified Fire Protection Engineer, the Fire Protection Designer of Record (FPDOR). Life Safety plans shall include graphic representations of travel distances.
Installation drawings, shop drawings or working plans, calculations, other required pre-construction documentation and as-built drawings shall be prepared, signed and sealed, by a NICET engineering technician and shall hold a current certification as an engineering technician in the field of Fire Protection Engineering Technology with minimum Level III certification in the appropriate subfield.
Provide training for the active systems consisting of two (2) four (4)-hour sessions to accommodate work shifts of the base fire department and allow for rescheduling for unforeseen fire department responses.

D4010 FIRE ALARM AND DETECTION SYSTEMS

Provide integrated and combined analog/addressable voice evacuation fire alarm/mass notification systems capable of notifying building occupants inside and adjacent to each building. Use UFGS 28 31 63.00 20, modified appropriately for inclusion of the mass notification system and incorporating additional requirements found in UFGS 28 31 76. Provide a complete, electrically supervised, addressable intelligent, manual and automatic, annunciated fire alarm and detection system throughout each building. The systems shall be voice evacuation type with line audio input capability to also serve as a mass notification system (MNS) and accept input from the MNS transceiver. These integrated systems shall be capable of notifying building occupants by means of tones, strobes, and prerecorded and live voice announcements. The fire reporting portion of the systems shall be compatible with the existing base fire reporting system and transmit fire alarm, trouble, and supervisory conditions and transmit the unique device data/address. The fire alarm systems shall include manual stations, system smoke detectors, duct smoke detectors, sleeping room detectors with sounder bases, audio/visual alarms, integral DACT and electrical supervision of all sprinkler system alarm and supervisory devices, and electrical supervision of fire pump controllers as required. Also provide a dialer capture module that communicates with the DACT and shall also communicate with, via fiber optic and dual telephone line, the Base's existing Bosch Conettix D6600 Communications Receiver/Gateway without any impairment to existing equipment and programming. The FA/MNS control panels shall be capable of handling a minimum of 500 individually identified sensors within the main control panel. All circuits are to be Class A. Manual pull stations shall be semi-flush mounted. Provide a combination remote fire alarm annunciator/local operating console in a single locking cabinet located immediately inside the Vestibule's exterior doors. All Fire Alarm panels shall be manufactured and supplied by Johnson Controls, Notifier, or Simplex.

The MNS systems shall include clear strobes labeled "ALERT," speaker output/spacing to meet intelligibility requirements and testing in accordance with NFPA 72, and lockable microphones for delivering live voice and eight (8) pre-recorded messages from local operator consoles (LOC) in the Vestibule's as well as the FA/MNS panels to be located in electrical rooms. Provide a minimum 20"x20"x20" unencumbered wall space and dedicated 20-amp power adjacent to the FA/MN control panels for installation and connection of a Madahcom TRX 401 transceiver provided and installed by Marine Corps/SPAWAR representatives. Provide 1½" conduits and pull string from the transceivers to 6 feet above the roof terminating at a UL listed weather head. Systems shall provide a spare power amplifier and automatic switching circuitry that will substitute the redundant amplifier for a failed unit. Amplifier circuits shall be loaded to no more than 50% of rated continuous capacity when producing sound levels as required by NFPA 72 against normal ambient background noise levels for this occupancy. Speakers shall be multiple tap units tapped no higher than the second from the highest tap. The MNS and its speakers shall be independent of any PA system. Do not provide exit textual displays.

Spare parts shall be directly interchangeable with the corresponding components of the installed systems. Spare parts shall be suitably packaged and identified by nameplate, stamping or tagging. Furnish the following:

1. Four keys or tools for resetting manual stations
2. Four keys for locks of control panels or cabinets
3. Two of each type smoke sensors with bases
4. Two of each type control module (if applicable)
5. Two of each type of monitor module (if applicable)
6. Three fuses of each type provided. Spare fuses shall be mounted in fuse-holder located inside each control panel
7. One of each type audio/visual device
8. One of each type visual device

D4020 FIRE SUPPRESSION WATER SUPPLY AND EQUIPMENT

Base design and hydraulic calculations on a static pressure of 51 psig (gauge) with 2068 gpm available at a residual pressure of 44 psig (gauge) at Hydrant number 172, located about 500' SE of the intersection E Street and 4th Avenue. The pressure drop from static to residual pressure readings for future fire flow tests associated with design and/or hydraulic calculations must be equal or exceed 8.6%. When performing additional fire flow tests, assure a minimum system pressure drop of 10% and adjust the supply curve to minimum tank operating level when compared to level at time of test.
The incoming water supply/sprinkler service shall be provided with a reduced pressure principle backflow preventer. The fire sprinkler lateral and the domestic lateral shall each be provided with control valves at their point of separation. Provide a wall-mounted double clapper fire department connection located on the front of each building, accessible by fire apparatus, and coordinated to be within 150' of a fire hydrant.

Provide horizontal split-case or vertical in-line centrifugal, electric driven fire pump(s). The minimum rated pump capacity shall be sized to accommodate the highest fire sprinkler system demand and applicable hose allowance. Fire pump(s) shall be connected to a back up power source as required by FPDOR engineering analysis to comply with applicable criteria. When a single fire pump, with an underground fire water distribution system, is used to serve both buildings, it shall be housed in a separate pump house building, provided with fire sprinklers, and is to have an independent fire alarm system. Pump house exterior shall match BEQ finish. A pump suction control valve is to be provided if required to comply with obtaining permit from State of North Carolina. A jockey pump(s) serving underground piping shall be supplied with a water meter with remote reading compatible with Base remote monitoring system(s).

D4030 STANDPIPE SYSTEMS

Provide Class I standpipe systems for buildings four stories or greater and in accordance with NFPA 14 and applicable criteria. Hose valves shall be located at the floor level (not intermediate landing). Interconnection of risers shall accommodate the highest fire sprinkler demand on each floor.
The building standpipe systems and sprinkler systems shall be fed from the same supply as a combined system.

D4040 SPRINKLER SYSTEMS

Provide wet pipe automatic sprinkler protection to provide complete coverage throughout each building. Provide dry pipe systems for areas subject to freezing and requiring protection based on building design. Flexible sprinkler hose/piping is not permitted.
For non-dwelling light hazard areas, the sprinkler rate of application shall be a minimum of .1 gpm/ft^2 over an area of 3000 ft^2 with hose stream allowance of 250 gpm. For ordinary hazard areas, the sprinkler rate of application shall be a minimum of 15 gpm / ft^2 over an area of 3,000 ft^2 with hose stream allowance of 500 gpm. Inside hose allowance to be per NFPA 13. Apply area of application increases as required by NFPA 13. Area of application reductions for quick response sprinklers are permitted in accordance with NFPA 13. Room design methods are not permitted. Dwelling unit designs in accordance with NFPA 13R are permissible when in conformance with criteria.
In areas with drop/finished ceilings; provide quick-response concealed pendent sprinklers with white cover plates, or white concealed horizontal sidewall sprinklers with white escutcheons, having ordinary temperature rating. Provide a minimum of twelve (12) spare cover plates for each style of concealed sprinkler for each building.

D4090 OTHER FIRE PROTECTION SYSTEMS

Fire Department access roads, as required by UFC 3-600-01, 2-10, shall be a manufactured pre-engineered permeable grass paving system and shall either be Presto's *Geoblock,* Invisible Structure's *Grasspave*^{2,} or a pre-approved equal. The fire department access road grass paving system shall: 1) be designed to accommodate AASHTO H-20 loading, 2) be installed per manufacturer's recommendations, 3) be provided with 8" minimum Botts' dot style reflective boundary markers mounted on a minimum 8" deep concrete base at 20' intervals, 4) be provided with manufacturer recommended transitions to adjoining/adjacent surfaces, 5) be an engineered system with calculations by geotechnical engineer to include CBR analysis, 6) include construction details specific to the project to meet the performance criteria. See section G20 for related requirements.
Access roads shall be parallel to building walls, with the inside edge to be between 25 to 33 feet of the building, cover a minimum of 75% of the linear projected length of building perimeter walls with a minimum of 66% of the calculated total perimeter access roads being along the sleeping room sides of the buildings. The minimum width shall be 20 feet and minimum inside turning radii shall be 30 feet.

Provide roof access to comply with UFC 3-600-01.

--End of Section--

6. ENGINEERING SYSTEMS REQUIREMENTS

D50 ELECTRICAL

SYSTEM DESCRIPTION

Provide an interior electrical system consisting of Service Entrance Wiring and Equipment, Distribution and Lighting Panelboards, Dry Type Transformers, Conduits, Feeder and Branch Circuits, Motor Control Equipment, Lighting and Branch Wiring, Communications, Security and Alarm Systems, Emergency Lighting and Power, Grounding, and Lightning Protection, including accessories and devices as necessary and required for a complete and usable system. This section covers installations out to the building 1.5 meter (5 foot) line.

The interior distribution system shall consist of insulated copper conductors in conduit.

GENERAL SYSTEM REQUIREMENTS

Provide an Electrical System complete in place, tested and approved, as specified throughout this RFP, as needed for a complete, usable and proper installation. All equipment shall be installed per the criteria of Section D50 and the manufacturer's recommendations. Where the word "should" is used in the manufacturer's recommendations, substitute the word "shall".

In addition to the requirements of NFPA 70, all electrical equipment installation inside the facility shall be in accordance with UFC 4-721-10 "Navy and Marine Corps Bachelor Housing".

D5010 ELECTRICAL SERVICE AND DISTRIBUTION

D501001 MAIN TRANSFORMERS

Main transformer(s) are defined in Section G40, *Site Electrical Utilities*.

D501002 SERVICE ENTRANCE EQUIPMENT

All service into the facility shall be underground.

Provide a Main distribution Panel as service entrance equipment if the service is under 1200 amps. Provide switchboard as service entrance equipment if the service is 1200 amps and higher. Provide switchboard with digital metering.

D501003 INTERIOR DISTRIBUTION TRANSFORMERS

Provide dry type transformers to step down secondary voltages for general purpose outlets and other low voltage equipment.

D501004 PANELBOARDS

Provide distribution and branch circuit panelboards with bolt-on type breakers throughout to serve loads as required. Each panelboard shall be directly fed from a dedicated circuit breaker in the Main

Switchboard. Run individual feeders from the Main Switchboard to each panelboard. Do not use series-rated system from circuit breakers/panelboards. Do not use dual section panelboards. When more than 42 circuits are required, provide separate panelboards. Provide a separate panelboard for each laundry room.

Provide arc-fault circuit breakers in panelboards feeding all bedroom circuits.

D501006 MOTOR CONTROL CENTERS

Provide individual motor starters with disconnect switches, variable speed drives, and manual motor starters for motor controls as required by mechanical equipment.

D501090 OTHER SERVICE AND DISTRIBUTION

Provide transient voltage surge suppressors (TVSS) at the service entrance.

D5020 LIGHTING AND BRANCH WIRING

Provide electrical connections for all systems requiring electrical service.

Provide lighting and general purpose receptacles throughout all spaces as required. Refer to Chapter 5 “Room Requirements” and also to UFC 4-721-10 “Navy and Marine Corps Bachelor Housing”.

In each bedroom, provide a minimum of four 20 amp quad receptacles on two dedicated 20 amp circuits. In each Service area, provide a minimum of three circuits consisting of one dedicated 20 amp appliance/convenience circuit, one dedicated 20 amp microwave circuit, and one dedicated 20 amp refrigerator circuit. Coordinate receptacle locations with area architectural elevations and details. At each vanity, provide one dedicated 20 amp circuit. In each Recreation/Lounge area, provide a minimum of four 20 amp receptacles on two dedicated 20 amp circuits. Provide GFCI receptacles in locations where required by the NEC.

In Laundry Area, provide circuits and receptacles as required for residential type washing machines and dryers.

D502001 BRANCH WIRING

All branch wiring shall be insulated copper conductors in conduit.

D502002 LIGHTING EQUIPMENT

Provide a complete lighting system consisting of exit and emergency lighting and area lighting consisting of fluorescent and high intensity discharge lighting including switches and automatic controls, including occupancy sensors, automatic lighting shutoff systems, and dimming systems.

In the Room Modules, provide surface mounted fixtures on the ceiling of the sleeping room which will provide a “residential feel” lighting quality. Lighting design shall provide and average maintained illumination of 30 foot-candles. Light fixtures shall be switched separately from the ceiling fan. Ceiling fan mounted light kits are not allowed. Install lights and fan in such a way as to eliminate a “strobe effect” caused by the ceiling fan. Provide wall mounted dimmer for lighting and wall mounted speed control for ceiling fan. Provide dual technology (infrared and ultrasonic) occupancy sensors which will separately operate all areas of the Room Module, including the sleeping area, bathroom, and service area.

Lighting fixtures in bathrooms shall be corrosion resistant.

All fluorescent ballasts shall be programmed start.

D5030 COMMUNICATIONS AND SECURITY

The Room Requirements Section identifies locations for communications and security systems and equipment, unless noted otherwise in the following sub-elements.

D503001 TELECOMMUNICATIONS SYSTEMS

Provide a complete building entrance facility, backbone distribution system, and horizontal distribution system including, but not necessarily limited to, all wiring, pathway systems, grounding, backboards, connector blocks, protectors for all copper service entrance pairs, patch panels, fiber optic distribution panels, terminators for all fiber optic cables, outlet boxes, telephone jacks, data jacks, and cover plates. Provide combination data/phone (Information) outlets. Each Information outlet shall have four 8-pin 8-conductor RJ45 communication jacks. Provide six Information outlets in the recreation/lounge area of each building. Provide copper cabling for elevator telephone service; please coordinate with Rich Desrosler @ (252) 466-6662.

Designer of Record shall coordinate installation and termination of all interior telecommunication systems with MCAS Cherry Point Base Telephone (Inside Plant). Point of contact for inside plant is Mr. George Cronk @ (252) 466-6661.

D503004 TELEVISION SYSTEMS

Provide a complete CATV system to be owned and maintained by the Government including all interior equipment required to provide high-quality TV signals to all outlets with a return path for interactive television and cable modem access. System shall include, but not necessarily limited to, headend amplifier, amplifiers, splitters, combiners, line taps, cables, outlets, tilt compensators and all other parts, components, and equipment necessary to provide a complete and usable system. Provide a minimum of two TV outlets per bedroom. Coordinate with the customer for final number and arrangement of CATV outlets in recreation/lounge areas. Coordinate system installation with the commercial CATV supplier Time Warner Communications, Tim Engel @ (910) 332-7862.

D503005 SECURITY SYSTEMS

Provide empty conduit for a future IDS and CCTV system for the BEQs. Pull conduits to a secure closet in the Duty Office.

D503090 OTHER COMMUNICATIONS AND ALARM SYSTEMS

Provide Combination Mass Notification and Fire Alarm System as specified in ESR Section D40.

D5090 OTHER ELECTRICAL SERVICES

D509001 GENERAL CONSTRUCTION ITEMS (ELECTRICAL)

Provide General Construction Items (Electrical) including, but not necessarily limited to, all connections, fittings, boxes and associated equipment needed by this and other sections of this RFP as required for a complete and usable system.

Conduits, cable trays and busways that penetrate fire-rated walls, fire-rated partitions, or fire-rated floors shall be firestopped in accordance with Section C10, *Interior Construction*.

D509002 EMERGENCY LIGHTING AND POWER

Provide power and wiring for emergency lights and exit lights throughout the facility.

Provide LED exit signs with battery backup at all exits. Battery backup shall provide 90 minutes of emergency lighting. Connect exit lighting power from local lighting circuits and connect ahead of local switching.

Provide battery powered emergency lighting units at all means of egress. Battery backup shall provide 90 minutes of emergency lighting. Connect emergency lighting power from local lighting circuits and connected ahead of local switching.

D509003 GROUNDING SYSTEMS

Provide a complete grounding system for the facility electrical and telecommunications systems.

D509004 LIGHTNING PROTECTION

Provide a complete lightning protection system including, but not necessarily limited to, strike termination devices (roof mounted air terminals), down conductors, ground rods, interconnecting conductors, surge suppression devices on service entrance equipment, and other connectors and fittings required for a complete and usable system.

Provide a Master Label issued by UL for the system.

Lightning Protection Systems shall not void the roof warranty.

D509005 ELECTRIC HEATING

Provide power wiring and connections as required for all electric heating systems and equipment.

D509006 ENERGY MANAGEMENT CONTROL SYSTEM

Provide power wiring and connections as required for all systems and equipment including HVAC Direct Digital Control systems. Coordinate connection requirements with switchgear and/or pad mounted transformer kWh metering. Provide telecommunications workstation outlet at each DDC panel for centralized energy monitoring.

These connections shall be made to the existing base-wide EMCS which is a JCI Metasys system. Include graphics and database programming.

--End of Section--

6. ENGINEERING SYSTEMS REQUIREMENTS

E20 FURNISHINGS

SYSTEM DESCRIPTION

Furnishings shall include fixed furnishings as part of the Structural Interior Design (SID) and the design and documentation of the movable furnishings, the Furniture, Fixtures, and Equipment (FF&E) Package.

The design and documentation of both shall be funded as part of the construction contract. The purchase and installation of the FF&E Package shall be funded separately as part of Collateral Equipment.

The movable furniture and furnishings (FF&E) for this facility may include, but are not limited to movable furniture systems, freestanding furniture, area/accent rugs, artwork, appliances, flat screen TVs (not connected to data), accessories, shop equipment, specialty equipment (specified by the Activity) and other miscellaneous items to support facility functions.

The estimate FF&E funding requirements is $3,825,671 (which includes the contractor's Handling and Administration Rate, shipping, and local taxes).

Fixed furnishings (items that are fixed to the structure), such as specialty equipment, drying cages, weapon racks, lockers, security cameras, motorized projection screens, blinds/shades are part of the construction contract. The Audio Visual (AV) Equipment will be funded as part of the FF&E Package. The A/V Equipment Package will be identified as a separate line item, and priced separately from the FF&E. Refer to Part 3 Section E10 of this RFP.

GENERAL SYSTEMS REQUIREMENTS

Design and provide fixed and movable furnishings for all areas as developed during Activity programming and as indicated in the Room Requirements (refer to Part 3 Section 5 of this RFP). Design a complete FF&E package and prepare supporting plans and procurement data. FF&E items identified in this RFP are to be used as a guideline to assist in establishing the minimum facility requirements and do not relieve the Contractor's Interior Designer from developing a complete design package that incorporates ALL of the Activities FF&E requirements. Design per specific UFC 4-721-01 BEQ February 2010, and in conjunction with UFC 03-120-10 July 2007, Interior Design.

The contractor shall have an Interior Designer with a minimum of one of the following credentials: National Council for Interior Design Qualification (NCIDQ) certification, or state and/or jurisdiction Interior Design Certification, Registration, or License. This same Interior Designer must prepare both the SID and the FF&E Package, attend, and participate in entirety all kick-off meetings, design meetings, to include, but not limited to, design charrettes, concept design workshops, and review meetings to develop the building design, floor plan, and the FF&E package. When Audio Visual (A/V), shop or specialty equipment is required in the project, the contractor shall obtain services of equipment specialists to specify the A/V, shop, or specialty equipment. The Contractor's Interior Designer and any Specialists shall not have any affiliation with the products specified. The NAVFAC Interior Designer reserves the right to approve/disapprove the qualifications of the Contractor's Interior Designer.

All fixed and movable furnishings selections shall be closely coordinated with Parts 3 and 4 Sections C10, Interior Construction, and C30 and E10 of this RFP. The FF&E package shall be fully integrated with the building systems and finishes.

The Contractor's Interior Designer shall be responsible for designing and providing specifications for procurement of all FF&E, to include delivery and installation, for the facilities built under this contract as directed by the NAVFAC Interior Designer. FF&E specifications shall be based on NAVSUP Blanket Purchase Agreements (BPA's), GSA schedules, and other Federal contracts and complying with priorities found in FAR Part 8.404. A list of current BPA contract holders is located in Part 6 of this RFP.

The FF&E package shall be fully integrated into the design and construction schedule for the building.

INTERIOR DESIGN SUBMITTAL AND MEETING REQUIREMENTS

STRUCTURAL INTERIOR DESIGN (SID)

The SID submittal process shall begin following the award of the RFP. The SID submittal shall include Interior Design programming documents, FF&E Floor Plans, and exterior & interior finish/color and material sample boards. Refer to this RFP Part 4 Section Z10 General Performance Technical Specifications and Part 2 UFGS Section 01 33 10.05 20, Design Submittal Procedures.

Provide the following SID meetings and submittals:

A. Concept Design Workshop (CDW) (10%-15%) or Initial Design Meeting: The Contractor's Interior Designer shall meet with the Activity and IDD for Marine Corps projects to develop the Interior Design SID programming documents, which will include a preliminary Furniture and Equipment Plan and the FF&E Summary List. The Contractor's Interior Designer shall provide in-depth room by room interviews to confirm Activity requirements for the new facility(s). These interviews shall occur at the Activity's current location, if possible, to include building walk-thru(s).These walk thru(s) should be prior to the CDW. Minutes of this meeting shall be submitted to the NAVFAC Interior Designer within 7 days.
B. Design Development (35%-50%) Submittal: The Contractor's Interior Designer shall provide a conceptual Finish Schedule, proposing finish materials to be used in all spaces. The Furniture and Equipment Plan and FF&E Summary List should be further developed and included in this submittal.
C. SID "Over the Shoulder" Review: Prior to the Pre-final (100%) Submittal, the Contractor's Interior Designer shall meet with the NAVFAC Interior Designer for an "over-the-shoulder" review meeting to present a minimum of (2) options for the interior building finishes/colors/materials. Finishes shall display manufacturer's label/specifications and be presented in a "loose" format for preliminary approval prior to the presentation with the Activity. The over-the-shoulder review meeting is to be held at NAVFAC Mid Atlantic.
D. Prefinal (100%) Submittal: The Contractor's Interior Designer shall present a minimum of two (2) NAVFAC-approved interior building finishes/color/material options, to the Activity for approval. Each of these two finish options shall be documented and submitted in a 16" x 20" presentation board format to Activity. In addition, the submittal shall include:

    1. An updated Furniture and Equipment Plan,
    2. Finish Schedule,
    3. Floor Finish Plan,
    4. Finish Legend
    5. Pre Final Finish Selections and Samples in 8½” x 19” binder format, using heavy duty plastic sheet protectors.

The Contractor's Interior Designer shall provide at least two sketches to show a perspective of the major areas of the interior. The sketches should not be elaborate but must show the proposed form and massing, colors to be used and an indication of materials used.

E. Final Submittal: The Contractor's Interior Designer shall incorporate the final approved Furniture and Equipment Plan, Finish Schedule, Floor Finish Plan and Finish Legend into the Contractor's final drawing set. These drawings and all approved finishes shall be submitted in 8-1/2" x 11" binder format, using heavy duty plastic sheet protectors. Four (4) sets of the Final SID Submittal shall be distributed to the NAVFAC Interior Designer, IDD, FEAD/ROICC, and the Activity.

1. An updated Furniture and Equipment Plan,
2. Finish Schedule,
3. Floor Finish Plan,
4. Finish Legend
5. Final Finish Selections and Samples in 8½" x 19" binder format, using heavy duty plastic sheet protectors.

SID CONSTRUCTION SUBMITTALS

No substitutions during the construction phase shall be made to the SID finishes once they have been approved by NAVFAC during the design phase. In the event that revisions may be required due to unforeseen conditions, such as discontinued product, such revisions must be submitted via the NAVFAC Interior Designer for approval before substitutions can be made, with a copy of transmittal to the FEAD/ROICC.

INTERIOR PHOTOGRAPHY SUBMITTAL

Upon completion of the FF&E installation, the contractor shall provide professional photography of the completed interior. The photographer must be in the business of specializing in architectural and interior photography. The submittal shall be a minimum of 6 photos. "Before" and "After" photos are required for all renovation projects. Permission for publishing and using the photos by NAVFAC is required. Images to be submitted on a CD as a JPEG or PDF with a resolution of no less than 300 dpi as well as 8" x 10" matte photographs. The photographs shall be taken prior to occupancy and staged with accessories as needed. Additional lighting may be needed to ensure quality images.

FIXTURES, FURNISHINGS AND EQUIPMENT (FF&E)

The FF&E process shall begin approximately with the 50% design submittal. The submittals shall include fixtures, furnishings, and equipment specifications in accordance with the Activity requirements to produce an optimally functional facility. FF&E are all items that are not fixed to the structure, but are fully integrated with the building systems and finishes. Refer to RFP Part 4, Section Z10, General Performance Technical Specification and Part 2, UFGS Section 01 33 00, February 2010, Design Submittal Procedures.

Develop design as described and in accordance with the Activity requirements. Include in the design all loose furnishings required to produce an optimum functional facility, consistent with quality commercial design. This project also includes the preparation of specific detailed information for each selected item. Each submittal shall demonstrate interaction thoroughly with the Activity requirements and complete coordination with the facility design and the SID. Four (4) submittals will be required; (1) for the IDD, (1) for NAVFAC Interior Designer, (1) for the FEAD/ROICC and (1) for the Activity.

For all projects, including fast track projects, the contractor shall be responsible for sufficiently scheduling all SID/FF&E submittals early enough to obtain the required government approvals, and meet all ordering and installation lead times to complete the project by the contract completion date. These are **minimum** requirements and the Contractor shall be prepared to provide any/all additional meetings and submittals that may be necessary to support the Interior Design effort/FF&E coordination.

Provide the following FF&E meetings and submittals:

A. **FF&E Requirements (Interior Design Orientation) Meeting**: This meeting shall occur upon completion of Design Development (or approximately 50%), at NAVFAC Mid Atlantic Norfolk Office prior to the development of the FF&E package. The NAVFAC Interior Designer will provide the Contractor's Interior Designer a sample format of the FF&E submittal, review the Best Value Determination (BVD) process, and discuss Blanket Purchase Agreement (BPAs), GSA or other mandatory sources to consider. The FF&E Summary List and a preliminary Cost Estimate shall be submitted within 21 days to the NAVFAC Interior Designer to review with IDD/ Base Property for Marine Corps Projects. Minutes of this meeting shall be submitted to the NAVFAC Interior Designer within 7 business days.

B. **FF&E "Over the Shoulder" Review:** Prior to the Preliminary FF&E Submittal the Contractor's Interior Designer shall meet with the NAVFAC Interior Designer for an "over-the-shoulder" review to present preliminary FF&E options. These can be presented in a "loose" format for preliminary approval prior to the Activity presentation. The "over-the-shoulder" review meeting is to be held at NAVFAC Mid Atlantic Norfolk Office.

C. **FF&E Concept Presentation:** The Contractor's Interior Designer shall present the NAVFAC approved preliminary FF&E package to the Activity for approval. This presentation will take place at MCAS Cherry Point. This presentation shall include loose format samples and catalog cuts. Sample boards are not required.

D. **Best Value Analysis (BVA), "Over the Shoulder Review":** Prior to issuing the BVA, the Contractor's Interior Designer shall meet with the NAVFAC Interior Designer for an "over-the-shoulder" review of the solicitation package. BVA Solicitation to include the following:

1. Copy of the BVA cover letter.
2. BVA Solicitation form & Questionnaire
3. Technical Specification to establish minimum acceptable FF&E requirements
4. Room and Typicals
5. Furniture Plans with Legends coded to the furniture plans (PDF format)

E. **BVA Submittal**: - The Contractor's Interior Designer shall submit two (2) copies of each submittal; one (1) copy of the Preliminary BVA package to the NAVFAC Project Manager (for distribution to the NAVFAC Interior Designer) and one (1) copy to Base Property for Marine Corps projects. This submittal shall be in binder format and will include the following:

1. Cover Title Page (project name, project #, submittal date, submittal title)
2. Table of Contents
3. Point of Contact List (includes contact information for recommended Best Value BPA Holder(s), vendors, and sub contractors)
4. Narrative of Interior Designer Objectives
5. Copy of all BVA Solicitation information sent to bidders and documentation that all required sources were contacted.
6. BVA Spreadsheet (comparing all vendor pricing, freight, project management, and qualification info).
7. Solicitation Forms submitted by each bidder (with supporting cut sheets/highlighted pricing sheets/technical specifications, pricing, dealer and manufacturer qualification for each product showing that products meets all requirements).
8. Response from UNICOR

F. **Preliminary FF&E Submittal:** The Preliminary FF&E submittal shall be due at pre-final (100%). It shall be presented to the Activity and NAVFAC Interior Designer. Submit the following in a 3-ring binder (with the exception of the 16x20 color boards) for both Activity and NAVFAC Interior Designer review and approval:

1. Cover Title Page (project name, project #, submittal date, submittal title)
2. Table of Contents
3. Point of Contact List (includes contact info for recommended Best Value BPA Holder(s),vendors and sub contractors)
4. Preliminary FF&E (Cost Summary) to include shipping, freight, handling, professional installation, project management, HAR and any applicable sales tax,
5. Preliminary Procurement Data Sheets for each product indication general appearance as well as proposed finish and fabric selections for all items.
6. Furniture placement plans coded to the FF& list and furnishings specifications
7. Specifications for furniture, furnishings, etc.
8. Catalog cuts and finish samples for all specified items.
9. 16” x 20” inch color boards of furniture/furnishings and finishes specified for Activity presentation to indicate overall design intent.

G. **Final FF&E Submittal:** The Contractor's Interior Designer shall submit the Final FF&E Package within 90 calendar days following the receipt of review comments on the preliminary FF&E submittal. The Contractor’s Interior Designer shall submit three (3) copies of the submittal: (1) each for NAVFAC Project Manager, FEAD/ROICC, and the Activity. Submit the following in a 3 ring in binder:

1. Cover Title Page (project name, project #, submittal date, submittal title)
2. Table of Contents
3. Point of Contact List (includes contact info for recommended Best Value BPA Holder(s), vendors, and subcontractors)
4. Final FF&E (Cost Summary) to include shipping, freight, handling, professional installation, project management, HAR and any applicable sales tax,
5. Final Procurement Data Sheets for each product indication general appearance as well as proposed finish and fabric selections for all items.
6. Final finish selections and memo samples for the FF&E Submitted in an 8” x 10” binder format using heavy duty plastic sheet protectors.
7. Copy of Final Quote on Company Letterhead from the vendor determined to be the Best Value.
8. Best Value Determination Guideline sheets (completed and signed by the Contractor’s Interior Designer).
9. Final Furniture placement plans coded to the FF&E list and specifications.
10. Technical Specifications for all furniture and equipment, etc.
11. CD copy of the final FF&E binder (One additional copy of the CD shall be sent to NAVFAC OICC Contracting Officer at MCAS Cherry Point).

FF&E CONSTRUCTION SUBMITTALS

No substitutions during the construction phase shall be made to the FF&E once they have been approved by NAVFAC during the design phase. In the event that revisions may be required due to unforeseen conditions, such as discontinued product, such revisions must be submitted via the NAVFAC Interior Designer for approval before substitutions can be made, with a copy of transmittal to the FEAD/ROICC.

SD-10 Operation and Maintenance Data
List Operation and Maintenance Manuals for seating, systems furniture and keyboard trays.

E2010 FIXED FURNISHINGS (SID)

Fixed furnishings (SID) are funded as part of the construction project and are not funded as part of FF&E Each submittal must demonstrate complete coordination with the facility design and with the package for movable furnishings.

Develop design as described herein and provide storage shelving, equipment racks, reception (check in) counter, and window treatments. Cross reference C10 Interior Construction, and C30 Interior Finishes, for performance requirements. Each submittal must demonstrate complete coordination with the facility design and with the package for movable furnishings.

E201001 FIXED ARTWORK

As required, provide wall mosaic, painted mural, graphics, and/or logo of activity in appropriate locations.

E201002 WINDOW TREATMENTS

All windows and other glazed openings to the exterior of the building shall be provided with manually operated light control solar shading system and are considered SID and are funded as part of the construction project.

Soft window treatments, such as draperies, are considered FF&E and shall be included in the FF&E package, as required.

E201003 FIXED SEATING AND TABLES

At a minimum, provide fixed locker room benches, fixed tables and chairs, auditorium fixed seating, dining booths and site furniture.

Provide durable, high quality site furniture fixed tables to interface with fixed seating.

E201004 DUTY DESK (CHECK IN COUNTER)

At a minimum, provide an architecturally significant desk design with Check-In Counter. Coordinate data, telephone, and electrical requirements. Elements to be included built not limited to: decorative lighting, ADA section of desk, solid surface counter, Command Identification Boards, etc.

E2020 MOVABLE FURNISHINGS

The design of the FF&E package is funded as part of the construction contract base bid. The purchase and installation coordination of FF&E is **a Planned Modification** to the contract and funded separately as part of Collateral Equipment. The specific process is outlined in PTS E20 in Part 4 of this RFP. If a Collateral Equipment list is provided within this RFP, the costs associated with the purchase and installation of these items are NOT to be included in the base bid. The estimated Collateral Equipment cost is provided for information purposes only. The Contractor only needs to propose the Handling and Administrative Ration (HAR).

Design and provide a FF&E package in accordance with UFC 03-120-10, *Interior Design,* and other portions of this RFP for all areas as developed during Activity programming to provide a fully usable and complete facility. FF&E may also include specialty items specified by the Activity and the Contractor's Interior Designer is responsible for incorporating these into the FF&E package.

The FF&E Package must include shipping, freight, handling, and professional installation, project management, HAR, applicable sales tax A Best Value Determination shall be performed on a minimum of three manufacturers for orders exceeding a total procurement of $3000 from an individual manufacturer. Documentation shall be provided to the Government with the final FF&E package. Specific Documentation is indicated in Part 4 of the RFP. The BVD Statement shall be completed and signed by the contractor's interior designer. A sample BVD form and instructions is provided in Part 6 of this RFP. A sample BVD form and instructions will be provided during the FF&E Procurement Requirements Meeting.

The Contractor, as a planned modification, shall be authorized by the Government Contracting Officer to procure all furniture/furnishings in the approved final FF&E package using predominately negotiated Federal contracts as directed by the Contracting Officer and the NAVFAC Interior Designer. When the modification for turnkey furniture procurement is exercised, the Contractor's proposed Handling and Administrative Rate (HAR) shall not exceed 5% of the total cost of the FF&E, shipping, freight, handling, and installation. The HAR includes all of the prime contractor's effort related to the storage, coordination, handling and administration of subcontractors, and all other associated costs and profit for the procurement of FF&E. No other charges, fees, or markups will be authorized. The contractor shall establish and submit a fixed percentage figure, for the administration effort of this modification (HAR), with the initial project proposal as part of the contractor's Pricing Schedule.

E202001 MOVABLE ARTWORK

Provide movable artwork as required.

E202002 MODULAR PREFABRICATED FURNITURE

Provide Workstation systems product or modular freestanding workstations as required. Provide at a minimum, an articulating keyboard tray with left or right handed mouse extension for each computer location.

E202003 FREESTANDING FURNITURE AND FILES

Provide ergonomic task seating, lounge, gaming furniture, electronic equipment, reception and guest seating, storage, filing, tables, BEQ room module furniture, mattresses, and anti theft products for electronic equipment as required.

E202004 RUGS & ACCESSORIES

Provide area rugs, lamps, soft window treatments (drapery and hardware) bedspreads, interior landscaping, and other decorative items as required.

E202006 INTERIOR LANDSCAPING (MOVABLE)

Not required.

E202090 OTHER MOVABLE FURNISHINGS

Provide waste receptacles, recycling containers, fire extinguishers, literature racks, washers, dryers, microwaves, refrigerators, non-plumbed coffee pots, and other appliances as required.

--End of Section--

G10 SITE PREPARATION

SYSTEM DESCRIPTION

The site preparation system consists of site clearing, demolition, salvage, relocation, earthwork, and hazardous waste remediation necessary to ready the site for other work associated with the project.

GENERAL SYSTEM REQUIREMENTS

Develop the project site and perform all on and off-site work necessary to meet the requirements of the project, antiterrorism criteria, local codes, reference standards, technical specifications and performance criteria. For general earthwork operations, edit UFGS 31 23 00.00 20 *Excavation and Fill* to consider specific project requirements and site conditions.

A topographic survey of the existing site has been performed [in May 2010] [and is included in Part 6]. The topographic survey has been provided to show the location of existing facilities, areas of new work required by this RFP and the character of the sites. Prior to starting work, physically verify the location of all existing utilities and obtain all additional survey data required to provide a quality final design. The existence, size, and/or location of the utilities are not guaranteed by the surveys provided. The Contractor shall verify the location of all utilities prior to construction. Electronic files of the topographic surveys will be provided to the Contractor only after award of the contract.

Subsurface soil information, including a geotechnical report, are included in Part 6, Attachments.

Any included subsurface data and information is only for the Contractor's information and is not guaranteed to fully represent all subsurface conditions. The Government shall not be responsible for any interpretation or conclusion by the Contractor drawn from the data or information.

Any geotechnical report included with site investigation data is provided only to better convey data (boring logs, testing, etc.) or to document observed site conditions. The assumptions, analysis, and recommendations of the accompanying report were developed for preliminary planning purposes only and may not be based upon present project requirements. Requirements stated in Parts 3 and 4 of the RFP take precedence over any content of any included geotechnical report.

The Contractor is required to retain a geotechnical engineer experienced and licensed in the geographic region of the project to interpret the provided data as related to his design concept and develop requirements for bidding. Additional requirements for the geotechnical design of this project are provided elsewhere in this RFP.

Minor variations between borings should be anticipated. The Contractor shall bear all costs associated with the site preparation and actual foundation except as allowed by the Contract Clause FAR 52.236-2, "Differing Site Conditions". The Contractor’s Geotechnical Engineer shall perform additional subsurface investigation as required to adequately determine all applicable geotechnical factors including the type and capacity of the project foundation(s). The Contractor's Geotechnical Engineer shall consider the provided information and any additional information obtained and prepare a report as described in other portions of this RFP.

Personnel under the supervision of a registered Professional Engineer shall provide inspection of excavations and soil/groundwater conditions throughout construction. The Engineer shall be responsible for performing pre-construction and periodic site visits throughout construction to

assess site conditions. The Engineer, with the concurrence of the Contractor and the Contracting Officer, shall update the excavation, sheeting, shoring and dewatering plans as construction progresses to reflect actual site conditions and shall submit the updated plan and a written report (with professional stamp) at least monthly informing the Contractor and Contracting Officer of the status of the plan and an accounting of Contractor adherence to the plan; specifically addressing any present or potential problems. The Engineer shall be available to meet with the Contracting Officer at any time throughout the contract duration. The Contractor shall bear all costs of the Engineer.

Unless otherwise noted, provide new facilities at the locations indicated on the drawings in another part of this RFP.

Minimize the impact of construction activity on operations and neighboring facilities.

Identify and obtain all permits to comply with all federal, state, and local regulatory requirements associated with this work. The contractor shall submit a complete "Permits Record of Decision" (PROD) form with the first design submittal package. A blank PROD form can be obtained at the Download Tab of Part 6 of the NAVFAC Design-Build website at the following link http://www.wbdg.org/ndbm/Download/Down_Additional.html?Section=AdditionalInfo. Contractor shall determine correct permit fees and pay said fees. Copies of all permits, permit applications, and the completed PROD form shall be forwarded to the Government's Civil Reviewer and Environmental Reviewer.

Jurisdictional tidal and non-tidal wetlands have not been identified on the project site.

Coordinate and obtain the Resident Officer in Charge of Construction's (ROICC) approval for proposed haul route(s), work site access point(s), employee parking location(s) and material laydown and storage area(s).

Refer to Site Analysis, the Geotechnical Reports, and Building Requirements Sections for additional information regarding site preparation operations.

G1010 SITE CLEARING

G101001 CLEARING

Preserve trees to the maximum extent possible. Coordinate with Landscape Architect on trees to remain. Clearly indicate the trees to remain on the drawings included in another part of the RFP or provide a clear description.

The project site does not have saleable timber.

Burning of trees to be removed will not be allowed.

G101002 TREE REMOVAL

Coordinate with ESR G101001 and the Landscape Architect.

Remove and dispose of all trees as required for project construction.

G101003 STUMP REMOVAL

Refer to Section G10 in Part 4 of this RFP for performance requirements associated with this work.

G101004 GRUBBING

Refer to Section G10 in Part 4 of this RFP for performance requirements associated with this work.

G101005 SELECTIVE THINNING

Refer to Section G10 in Part 4 of this RFP for performance requirements associated with this work.

G101006 DEBRIS DISPOSAL

All grubbing and clearing residue, demolished material, rubbish, and debris generated by this project shall be hauled off-site and off station by the Contractor.

G1020 SITE DEMOLITION & RELOCATIONS

The items to be reused or relocated include the fitness equipment and the parking lot fence.

G102001 BUILDING MASS DEMOLITION

Not required.

G102002 ABOVEGROUND SITE DEMOLITION

Preserve the following aboveground site elements: All utilities and storm drainage elements serving existing facilities that are to remain unless new utilities and storm drainage facilities are incorporated or replace them.

Demolish the portion of the existing parking area and aprons that conflicts with construction. Demolish the existing gravel parking area

G102002 1.1 ABOVEGROUND STORAGE TANKS

Not used.

G102003 UNDERGROUND SITE DEMOLITION

Preserve the following underground site elements: all existing utilities required for proposed project.

Abandonment of utility systems shall be done in a manner that conforms to applicable codes and regulations, removes their presence from the ground surface and clearly indicates that they have

been abandoned. Utilities shall not be abandoned in place underneath or within 10 feet (3.0 m) of any new facilities. Remove and relocate existing utility piping, conduits, and utility structures under the proposed building.

All conduits to be abandoned shall have wiring removed.

All piping to be abandoned shall be removed. Piping shall be removed under pavements subject to potential vehicle loadings.

Remove existing utility structures to 3 feet (900 mm) below existing or new adjacent grade, whichever is greater. Break up bases to permit drainage. Fill with clean sand.

Contractor shall follow ESR Section F2020 "Hazardous Component Abatement" if insulation of existing steam lines is suspected to contain asbestos. Coordinate with the Environmental Engineer.

G102003 1.1 UNDERGROUND STORAGE TANKS

An underground storage tank report is not provided to support this project.

Prior to starting work, conduct any additional testing that may be needed to provide a final design and comply with all applicable federal, regional, state and local regulations. Refer to UFC 3-800-10N, *Environmental Engineering for Facility Construction*, for additional requirements and criteria.

G102004 BUILDING RELOCATION

Not used.

G102005 UTILITY RELOCATION

Remove and relocate all existing utilities from beneath the project structures. Avoid placing utilities beneath pavement areas unless required for service to the paved area.

Comply with the requirements of the utility provider concerning the utility relocation.

G102006 FENCING RELOCATION

Relocate or reuse existing fence and its appurtenances as indicated on the drawings in another part of this RFP.

G102007 SITE CLEANUP

Not used.

G102090 OTHER SITE DEMOLITION & RELOCATIONS

G1030 SITE EARTHWORK

The Contractor shall determine the methods employed for earthwork operations, including grading, excavation, compaction, etc., that minimizes reduction of the support capacity of the surface soils encountered. If the method used results in deterioration of the soil support capacity the Contractor shall provide a remedy satisfactory to the Contracting Officer at no cost to the Government.

G103001 GRADING

Finish floor elevations for new facilities shall be above the 100 year flood elevation. Provide elevations for mechanical/electrical equipment pads above the 100 year flood elevation. See Section A10 and the Geotechnical Report for information regarding site conditions that may affect the grading operations.

G103002 COMMON EXCAVATION

Refer to Section G10 in Part 4 of this RFP for performance requirements associated with this work.

G103003 ROCK EXCAVATION

Blasting will not be permitted.

G103004 FILL & BORROW

Borrow and select fill shall come from offsite unless directed otherwise by the Base.

G103005 COMPACTION

Refer to Section G10 in Part 4 of this RFP for performance requirements associated with this work.

G103006 SOIL STABILIZATION

The following methods of soil stabilization will not be allowed: geosynthetics, such as geotextiles and geogrids, lime, cement, lime slurry, asphalt, or pressure grouting designed to function as required by site conditions.

G103007 SLOPE STABILIZATION

Provide slope stabilization through appropriate grading and site design for a minimum factor of safety of 1.5 or slope that does not exceed the maximum slope per local code requirements. The following techniques for slope stabilization will be allowed: geogrids, riprap, or concrete

G103008 SOIL TREATMENT

Treat the area around the entire foundation of each building for termite control in accordance with manufacturer's instructions.

G103009 SHORING

Refer to Section G10 in Part 4 of this RFP for performance requirements associated with this work.

G103010 TEMPORARY DEWATERING

Where excavation extends into groundwater levels, dewatering methods shall be employed on a localized basis to facilitate excavation operations. Perform dewatering in accord with all applicable Unified Facilities Criteria, COE safety procedures and applicable Codes, laws and Regulations. Dewatering shall not have a negative result on existing structures, pavement, or utilities. Water generated by dewatering during excavation shall be disposed of in a manner that does not interfere with activity operations and complies with all regulations. Provide a dewatering plan prepared and sealed by a licensed engineer for operations that involve lowering the groundwater more than two feet, lower the groundwater in an area greater than 1,000 square feet or that employs the use of well points. The engineer shall visit the site as required to ensure compliance with the plan, site, and operational conditions are as considered in the plan and update the plan to reflect current conditions whenever there is a change in any relevant factor.

Provide the name and certification of the North Carolina certified well driller being used. Also provide well construction and abandonment reports for submittal to the state. Comply with all North Carolina requirements and regulations.

G103011 TEMPORARY EROSION & SEDIMENT CONTROL

Construct temporary measures including but not limited to filter barriers, silt fence, inlet protection, culvert protection, construction entrance, dust suppressors, temporary seeding, and erosion control matting to reduce on-site erosion and off-site runoff and sedimentation. Refer to Section G10 in Part 4 of this RFP for performance requirements associated with this work.

G103090 OTHER SITE EARTHWORK

Not used.

G1040 HAZARDOUS WASTE REMEDIATION

A contaminated soil/groundwater report is not provided to support this project.

Prior to starting work, conduct any additional testing that may be needed to provide a final design and comply with all applicable federal, regional, state and local regulations. Refer to UFC 3-800-10N, *Environmental Engineering for Facility Construction*, for additional requirements and criteria.

G1040 1.1 EXCAVATION

Perform excavation of contaminated material in accordance with: Section 01 57 19.05 20, *Temporary Environmental Controls for Design-Build*.

All soil excavated within the contamination area may be re-used as backfill in the excavation where it was encountered if the soil is determined suitable for backfill as specified herein, unless it is saturated with petroleum (e.g. when the soil is squeezed, oil drips out). If the excavated soil is not suitable for backfill (cannot be compacted or does not meet the requirements of Section 31 23 00.00 20, "Excavation Fill"), it shall be transported to the ‘Soil Stockpile Area’. At the stockpile area the soil shall be tested and disposed of in accordance with the requirements specified herein. During excavation within the contamination area the contractor shall temporarily stockpile

the excavated soil as close to the excavation as possible, but not so as to impede construction progress. The contractor shall be responsible for determining the location and size of the temporary stockpile within the contamination area. The contractor shall be responsible for determining the exact location of the soil stockpile area on the construction site. Therefore, except for an increase or decrease in tonnage of contaminated material, claim for additional compensation shall not be made regardless of the amount of effort or time required to handle or stockpile soil. The contractor shall take measures specified herein to prevent the contamination of adjacent areas at all stockpile locations and during earthwork operations.

If contaminants are suspected through odors or visual inspections during soil investigations, stop work immediately and contact the Contracting Officer.

G1040 1.2 STOCKPILED SOILS

For stockpiled soils, provide a minimum of one test for TPH, and one test for BTEX and TCLP. Soils that contain 50 ppm or more TPH, 10 ppm or more BTEX or fail the TCLP test are considered contaminated materials.

Contaminated stockpiled materials shall be disposed of in accordance with applicable federal, state and local regulations.

G1040 1.3 CLEAN FILL

Soils from on-site excavations that meet project requirements and testing determines to be clean fill shall be used and compacted in accordance with the requirements for the location used.

G1040 1.4 SPILLS

In the event of a spill or release of hazardous substances, pollutant, contaminant or oil, notify the Contracting Officer immediately. Containment/Control actions shall be taken immediately to minimize the effect of any spill or leak. Clean up shall be performed at the Contractor’s expense in accordance with applicable federal, state and local regulations.

G1040 1.5 DISPOSAL

All waste materials shall become the property of the Contractor and shall be disposed of or recycled off Government property.

--End of Section--

6. ENGINEERING SYSTEMS REQUIREMENTS

G20 SITE IMPROVEMENTS

SYSTEM DESCRIPTION

The site improvements system consists of pavements and pavement related features, landscaping and other exterior site development work related to this project. Pavement design shall be performed by a licensed Professional Engineer familiar with conditions local to the project site.

GENERAL SYSTEMS REQUIREMENTS

Provide site improvements as required to make a useable facility that meets functional and operational requirements, incorporates all applicable anti-terrorism / force protection and physical security requirements, and blends into the existing environment.

Provide site improvements in conformance with applicable requirements of the Uniform Federal Accessibility Standards.

Identify and obtain all permits to comply with all federal, state, and local regulatory requirements associated with this work. The contractor shall complete the "Permits Record of Decision" (PROD) form with the first design submittal package. A blank PROD form can be obtained at the Download Tab of Part 6 of the NAVFAC Design-Build website at the following link: http://www.wbdg.org/ndbm/Download/Down_Additional.html?Section=AdditionalInfo. Contractor shall determine correct permit fees and pay said fees. Forward the copies of all permits, permit applications, and completed PROD form to the Government's Civil / Mechanical reviewer.

Provide improvements as required to conform to all applicable anti-terrorism and physical security requirements.

Minimize the impact of construction activity on operations and neighboring facilities.

Locate new site improvements at locations indicated on the drawings in another part of this RFP. If specific locations are not provided, site the improvements to develop appropriate and positive relationships with other facilities and to conform to existing development patterns.

Refer to Site Analysis and Building Requirements Sections for additional site improvement functional program information.

G2010 ROADWAYS

Provide roadways, as required, to allow for safe, convenient, and logical circulation, while discouraging through traffic. The Designer of Record shall take into consideration the anticipated daily traffic over the life of the project (20 years) as well as the existing soil conditions at the site when designing pavements. Minimum bituminous pavement section is 2" bituminous surface on 8" aggregate base over a compacted subgrade. Minimum PCC pavement section is 6" PCC on 4" aggregate base over a compacted subgrade.

Provide other roadway improvements markings and signage.

G201001 BASES & SUBBASES

The following materials will not be allowed for base or subbase courses: lean concrete, sand, clay, or shell.

G201002 CURBS & GUTTERS

Provide curb and gutter to tie into adjacent facilities.

G201003 PAVED SURFACES

Recycled asphalt pavement material may be used in bituminous concrete pavement as permitted by the SHS.

G201004 MARKING & SIGNAGE

Provide pavement markings including crosswalks to match existing.

Provide signage.

Provide temporary pavement markings and signage throughout construction to meet phasing requirements indicated in the project program. Provide temporary signage in accordance with the MUTCD.

G201005 GUARDRAILS & BARRIERS

Provide wheel stops, and bollards in accordance with the UFC 3-200-10N, *Civil Engineering*.

G201006 RESURFACING

Provide resurfacing of existing pavement by bituminous overlay.

G201090 OTHER ROADWAYS

Roadway(s) to be used exclusively as fire lanes within the project site area shall be provided and constructed of a reinforced grass geogrid system, and shall be incorporated into the sidewalk design where practical with the geogrid system on either side of the sidewalk. Design of fire lanes shall be in accordance with the requirements of ESR Section D4090, and shall take into consideration the static and dynamic support weight of the vehicles per the latest ASHTO H20 loading requirements and by existing soil conditions. Sidewalks that traverse or are located within the fire department access lanes, or otherwise require crossing by a fire department vehicle, shall be designed to support an 80,000 pound vehicle.

G2020 PARKING LOTS

Review the security study and incorporate its requirements into the design. Visitor, staff, and service personnel parking should be convenient, safe, and pleasant to use.

Provide parking for privately owned vehicles (POVs) as described in Section 3.2.3 of the Site Analysis. New parking sections shall be designed as required by soil conditions and as determined by Designer of Record. The specific design of both shall take into consideration the anticipated daily traffic over the life of the project (20 years) as well as the existing soil conditions at the site.

Parking lot(s) shall be of bituminous pavement. As an option, traffic aisles within the parking lots shall be of bituminous pavement, while the actual parking slots themselves may be of pervious concrete. Minimum bituminous pavement section is 2" bituminous surface on 8" aggregate base over a compacted subgrade. Minimum pervious concrete pavement section is 6" PCC on 4" aggregate base over a compacted subgrade. Gravel pavement may not be used.

Provide other parking improvements including dumpster pads of reinforced concrete pavement, parking entrances for two way traffic, motorcycle parking stalls, bicycle stalls, markings, and signage as appropriate. Raised, landscaped islands and buffers shall be included where practical.

Provide handicapped parking in accordance with the Uniform Federal Accessibility Standards.

Accessible parking must be provided to persons with disabilities and placed within the main parking area with access to the main entrance. These spaces must comply with Secretary of Defense Memorandum, 20 Oct. 93, *Access for People with Disabilities,* and NAVFAC Planning and Design Policy Statement, *Barrier Free Design Accessibility Requirements, 26 May 94, revised 1 Jun 97.*

An option shall be considered for providing photovoltaic panels over parking spaces (see ESR G40).

G202001 BASES & SUBBASES

Crushed concrete meeting specified gradation for aggregate base or subbase courses may be used.

G202002 CURBS & GUTTERS

Provide curb and gutter to tie into adjacent facilities. Minimize curb and gutter as much as possible in order to meet LID requirements.

G202003 PAVED SURFACES

Portland cement concrete shall have a minimum design flexural strength of 650 to 700 psi (4.48 to 4.83 MPa) in not more than 28 days.

Recycled asphalt pavement material may be used in bituminous concrete pavement as permitted by the SHS.

G202004 MARKING & SIGNAGE

Provide permanent and temporary markings (pavement, curb, and object), signage (regulatory, warning, and guidance), and other traffic control devices as required to facilitate proper utilization of the parking areas.

Provide pavement markings including crosswalks in accordance with MUTCD.

Provide signage to match existing, in accordance with MUTCD.

Provide temporary pavement markings and signage to meet phasing requirements indicated in the project program. Provide temporary signage in accordance with the MUTCD.

G202005 GUARDRAILS & BARRIERS

Provide wheel stops, and bollards in accordance with the UFC 3-200-10N, *Civil Engineering*.

G202006 RESURFACING

Not Used.

G202007 MISCELLANEOUS STRUCTURES AND EQUIPMENT

Photo Voltaic Panel Array Structures:

The construction of Photovoltaic panel array supports at grade, located in the parking lots, shall include masonry, concrete, or steel vertical elements cantilevered from a concrete footing. All structural elements shall be adequately protected from the weather and shall allow for drainage as required. See *A10 Foundations*, *Engineering System Requirements*, for foundations.

G202090 OTHER PARKING LOTS

Not Used.

G2030 PEDESTRIAN PAVING

Provide a network of Portland cement concrete sidewalks, separated from, but connected to vehicular circulation systems, to allow pedestrian circulation between various elements of the project. As alternative options to PCC, consideration shall be given to both pervious concrete and block pavers around the building and patio areas, and wherever else appropriate. Provide exterior lighting along sidewalks as appropriate between the BEQs, the parking lots, and the various recreational facilities.

G203001 BASES & SUBBASES

Not Used.

G203002 CURBS & GUTTERS

Not Used.

G203003 PAVED SURFACES

Not Used.

G203004 GUARDRAILS & BARRIERS

Not Used.

G203005 RESURFACING

Not Used.

G203006 OTHER WALKS, STEPS & TERRACES

Provide 1200 total sq ft of patio area for the two BEQs. This can be as one combined patio for both BEQs, or divided equally between the two at 600 sq ft per BEQ. Patio(s) shall be adjacent to the BEQ lounge area(s) and shall be of molded or stamped concrete or brick pavers and shall include stone/rock gardens. Provide two built-in gas grills with adjoining stainless steel countertops. Provide a drinking fountain of a high-quality frost-proof design with a frost-proof hose bib at the base. Provide concrete picnic tables and benches, trash receptacles and a recyclables collection bin. All items shall be commercial grade and heavy duty.

G2040 SITE DEVELOPMENT

G204001 FENCING & GATES

Not Used.

G204002 RETAINING AND FREESTANDING WALLS

Freestanding Screen Walls:

Wall Construction System (back-up systems for anchored wall veneer) shall be cast-in-place concrete or concrete masonry unit (CMU). The exterior material shall be anchored brick masonry veneer, and shall match the existing adjacent structures on the base. The anchored veneer need only be installed on surfaces visible to circulation areas.

G204003 EXTERIOR FURNISHINGS

All site furnishings shall conform to the Base Exterior Architectural Plan (BEAP) and the Installation and Appearance Plan. Provide picnic tables and one barbecue grill

G204004 SECURITY STRUCTURES

Provide a passive barrier system including bollards, posts, guardrails, ditches, and cable reinforced fence. Each bollard shall withstand a 10,000 pound (4536 kg), vehicle at impact speed of 40 mph (65 kph), with a maximum bollard deflection or vehicle penetration of 20 feet (6 m). The cable reinforced fence shall be designed for a 4000 lb (1814 kg) vehicle traveling at 40 mph (64 kph) with a maximum penetration of 40 feet (12.2 meters).

Provide earthen berms landscaped with small trees as ATFP barriers (see Part 3 Site Analysis, Section 3.2.5) in addition to setback requirements between buildings and parking/roads. Bioretention basins may be used in place of earthen berms if applicable. Design should complement the exterior features of the buildings.

G204005 SIGNAGE

Provide signage in accordance with the Activity's BEAP and the Installation and Appearance Guide.

G204006 FOUNTAINS & POOLS

Not Used.

G204007 PLAYING FIELDS & RECREATIONAL FACILITIES

Provide two exterior basketball courts, two volleyball courts, two horseshoe pits, and two recreation/ picnic shelters, one of each for each BEQ per Section 3.2.6 of the Site Analysis. Each recreation/ picnic shelter shall be provided with two charcoal barbeque grills, four concrete picnic tables with benches, trash receptacles, and charcoal ash containers. Also provide at each shelter a drinking fountain of a high-quality frost-proof design with a frost-proof hose bib at the base. Provide sidewalk access to the new courts and recreation/picnic shelters.

Basketball courts shall be lighted, and surfaces shall be of integral colored concrete. Provide all necessary equipment for a complete and usable court. Wood backboards are prohibited. Rims shall be durable, double ring and double braced with steel nets. Provide at each basketball court a drinking fountain of a high-quality frost-proof design.

Volleyball courts shall be lighted and of non-compacting play sand, 10” deep, and bordered with containment edging material. Provide all necessary equipment for a complete and usable court.

Horseshoe pits shall be lighted. Stakes and durable backstops shall be provided along with all necessary equipment for a complete and usable pitching facility.

Two concrete benches shall be provided at each basketball and volleyball court, and one for each horseshoe pit. Provide one trash receptacle for each facility, each receptacle being permanently installed on a concrete pad.

G204008 TERRACE AND PERIMETER WALLS

Not Used.

G204009 FLAGPOLES

Not Used.

G204090 OTHER SITE IMPROVEMENTS

Dumpsters:

Provide two pads to hold three dumpsters each (one pad for each BEQ) on the project site, along with screening walls on three sides of each pad. The pads shall be composed of 6-inch thick reinforced Portland cement (broom finished) concrete, reinforced with wire for rebar. Pad shall be large enough to accommodate the front wheels of the carrying truck, and shall be 4000 psi air-trained concrete with a grade of at least 1/8-inch per foot for drainage. Each pad shall measure 38 feet wide and 9 feet deep. Screening walls shall be seven feet tall and of masonry block with brick veneer compatible with the design of the surrounding BEQ facilities. No gates are required.

Pads shall be located for easy accessibility in an area that provides minimum disruption of through traffic flow and is outside of high visibility, while also meeting ATFP standards (82-foot standoff distance).

Recreation Shelter / Picnic Table Canopy:

The recreation shelter/picnic table canopy shall be constructed of steel, concrete, or masonry cantilever and/or frame elements with anchored brick veneer to match the existing adjacent structures on the base. The roof shall be of metal deck over steel shapes and/or joists, or plywood over timber framing and/or timber trusses. Exposed cold rolled light gage steel members shall not be allowed. All structural elements shall be adequately protected from the weather and shall allow for drainage as required. See *A10 Foundations*, *Engineering System Requirements*, for foundations.

Covered Walkway Structure Supporting Photo Voltaic Panel Arrays:

The covered walkway structure supporting photo voltaic panel arrays shall be constructed of steel, concrete, or masonry cantilever and/or frame elements with anchored brick veneer to match the existing adjacent structures on the base. The roof shall be of metal deck over steel shapes and/or joists, or metal deck over light gage metal trusses. All structural elements shall be adequately protected from the weather and shall allow for drainage as required. See *A10 Foundations*, *Engineering System Requirements*, for foundations.

Equipment Wash-down Area:

See Part 3 Chapter 1 for description of wash-down area.

Equipment Drying Area:

See Part 3 Chapter 1 for description of drying area.

G205000 LANDSCAPING

Provide complete landscaping consisting of lawn, groundcover, trees, shrubs, perennials and ornamental grasses as required to provide a quality, cost-effective, functional and visually appealing landscape program that will enhance the development, while complying with all applicable anti-terrorism, force protection and physical security requirements.

Guarantee all landscaping for a period of one year after final acceptance of the project.

Provide complete landscaping maintenance, including routine mowing, watering as needed, mulching, and restaking throughout the guarantee period.

Provide evergreen or broadleaf evergreen shrubs or small evergreen trees for screening of mechanical equipment/walls, dumpster enclosures on three sides, and other obstructions that do not present an aesthetic view from the street.

As part of the requirements within part four of this RFP, the following landscaping shall also be provided:

A. Shade trees shall be 3” in caliper and 12’ to 14’ in height. Flowering trees shall be 1 3/4” to 2” in caliper and 8’ to 10’ in height. Evergreen trees shall be 2 1/2”” in caliper and 6’ to 8’ in height. Shrubs and grasses shall be a minimum of three gallons and ground cover shall be a minimum of 1 quart.

B. All planting beds excluding bioretention filters shall receive 3” of shredded hardwood mulch over weed control fabric.

C. All planting beds shall be encompassed with painted steel edging 3/16” thick by 5” height to separate beds from turf. Exception for edging is where beds abut concrete walks and bioretention filters.

D. For all parking lots provide one shade tree for every 10 parking spaces. All parking lot trees shall be no more than two species. Minimum median width shall be 9 feet.

E. All sites that adjoin streets shall be planted with street trees the entire frontage of the property. Trees shall be shade or flowering, equally spaced in a straight row and a minimum of ten feet from the curb. Shade trees shall be planted 35' to 40' on center and flowering trees shall be planted 15' to 20' on center. All street trees shall be one species. When possible match existing trees along the street.

F. Provide small trees, shrubs, and ground cover plantings at all building entrances.

G. Provide trees, shrubs, and ground cover in and around all bioretention filters. Provide 4 inches of triple shredded mulch in all bioretention filters. Trees and shrubs shall be planted at the rate of 5 trees and 15 shrubs per 1000 square feet of bioretention filter. If filter fabric is used it shall only be used along the sides of the bioretention. The entire bioretention shall be surrounded by a 6 feet wide sod strip. The soil filter mix shall be: 50% sharp sand, 30% topsoil, 15% double shredded hardwood mulch and 5% peat moss thoroughly blended before spreading. Provide a berm around all bioretention filter overflow outlets composed of soil filter mix, topped with 3" to 5' diameter stone such that the stone layer prevents floating mulch from reaching the overflow outlet but allows storm water to pass. Plant the berm with shrubs at 3 feet on center. The contractor shall guarantee that the bioretention filters are not infiltrated by any site sediment during construction. Bioretention filters shall be installed after all upstream tributary areas to the bioretention filter have been fully stabilized with turf or landscaping.

H. All proposed parking lots that can be seen from surrounding roadways or recreational areas shall be screened with an evergreen or broadleaf evergreen shrub. Shrub size at installation shall be a minimum height of 30" by 24"in width, planted 3 feet on center.

I. The proposed tree mixture for the site shall be approximately 60% shade trees, 20% flowering trees and 20% evergreen trees.

Provide small trees on all ATFP earth berms.

Guarantee all landscaping for a period of one year after final acceptance of the project. Provide landscape features using mostly native species that will not require a permanent irrigation system after the establishment period. Incorporate landscape features into the LID practices of bioretention cells to support infiltration on the site where possible to reduce downstream storm water measures.

G205001 FINE GRADING AND SOIL PREPARATION

Provide fine grading as required to ensure drainage away from buildings and prepare the soil for seeding.

Provide 4" of topsoil for all grass areas and other pervious areas disturbed by Contractor operations.

G205002 EROSION CONTROL MEASURES

Prevent erosion from occurring by providing erosion control measures as required by city, state, and federal requirements.

G205003 TOPSOIL AND PLANTING BEDS

See G205000 Plantings.

G205004 SODDING

Provide centipede sod for all unpaved and unplanted areas up to the limit of construction.

G205005 PLANTINGS

Preserve existing trees to the greatest extent possible.

--End of Section--

6. ENGINEERING SYSTEMS REQUIREMENTS

G30 SITE CIVIL / MECHANICAL UTILITIES

SYSTEM DESCRIPTION

The site civil/mechanical utility systems include water supply systems, sanitary sewer systems, storm drainage systems, heating distribution systems, cooling distribution systems, fuel distribution systems and associated appurtenances which are more than 5 feet (1.5 meters) outside the building.

The site mechanical utility system consists of all piping and appurtenances for steam and condensate, steam manholes, chilled water, hot water, liquid fuel, natural gas, and propane including all accessories and devices as necessary and required for a complete and usable system up to 5 feet (1.5 meters) outside buildings.

GENERAL SYSTEM REQUIREMENTS

Develop the site to provide water, fire protection, sanitary sewer, storm drainage, heating, cooling and fuel distribution services that meet the requirements of each applicable regulatory agency that governs and issues permits for the construction and operation of these systems. Provide each system complete and ready for operation.

Physically verify the location of existing above and below ground utilities prior to starting work.

Identify and obtain all permits to comply with all federal, state, and local regulatory requirements associated with this work. The contractor shall complete the "Permits Record of Decision" (PROD) form with the first design submittal package. A blank PROD form can be obtained at the Download Tab of Part 6 of the NAVFAC Design-Build website at the following link: http://www.wbdg.org/ndbm/Download/Down_Additional.html?Section=AdditionalInfo. Contractor shall determine correct permit fees and pay said fees. Forward the copies of all permits, permit applications, and completed PROD form to the Government's Civil / Mechanical reviewer.

Minimize the impact of construction activity on facility operations and neighboring facilities.

Utility connection points are indicated on the drawings in another part of this RFP. Obtain final approvals from the Government's Civil/Mechanical Reviewer and the Contracting Officer for all utility connection points associated with this work.

Coordinate with the local utility providers and pay any fees or charges required to connect to their utility.

Refer to Site Analysis and Building Requirements Sections for additional site civil/mechanical utilities information.

Provide all required fittings, connections, and accessories required for a complete and usable system. All equipment shall be installed per the criteria of PTS Section G30 and the manufacturer's recommendations. Where the word "should" is used in the manufacturer's recommendations, substitute the word "shall".

After installation of the equipment and systems, provide individual training courses for two Government personnel for each of the items listed below, covering items contained in the Operations and Maintenance manuals. Provide one copy of the Operations and Maintenance manuals for each two course attendees. Provide one DVD disc of the training courses to be used as refresher courses and to train additional personnel. Training shall be conducted by the same factory trained engineer that supervised the installation of the system. Training shall include classroom discussion as well as hands on maintenance, replacement of typical components and repair type maintenance training for parts typically replaced or repaired in the field. Submit training plan 30 calendar days prior to training sessions. Training plan shall include scheduling, content, outline, and training material handouts. Provide training for Cathodic Protection System.

G3010 WATER SUPPLY

The new water system is an extension of the existing water system. The existing water system serving the project site is owned by the federal government. Provide the new water system and connections to the existing water system in accordance with UFC 3-200-10N, *Civil Engineering*; the utility provider's requirements; and the state waterworks' regulations; whichever is more stringent.

Notify the utility provider of the additional demand generated by the proposed facility. Provide a copy of all correspondence with the utility provider, to the Government's Civil/Mechanical Reviewer.

Provide connection from each BEQ to the existing water distribution system at the optimum point practical. Contractor shall confirm sufficient capacity in the existing system to handle the additional flow down-line from the connection point. Final approval from the Government's Civil/ Mechanical Reviewer and the Contracting Officer must be obtained for the specific water connection point.

The new water system shall be designed so water consumption for each facility is monitored from one meter. The meter shall be easily accessible, but not obvious.

G301001 WELL SYSTEMS

Not Used.

G301002 POTABLE WATER DISTRIBUTION

Connect the new potable water distribution system to the distribution system at a suitable point of connection.

If required, provide exterior corrosion protection on metallic pipe lines.

A water meter shall be provided on the service line for each BEQ facility. Provide a Smart Meter and remote reading in accordance with the MCB Camp LeJeune Advanced Metering Guide Specifications.

Provide meter box.

Fire hydrant color shall in accordance with UFC 3-500-01, *Fire Protection Engineering for Facilities*.

Backflow preventers are required on all service entrance lines. If not specified in ESR D20 and D40, provide backflow preventers in a belowground vault outside the building.

G301003 POTABLE WATER STORAGE

Not Used.

G301004 FIRE PROTECTION WATER DISTRIBUTION

Provide connection for fire protection to the existing water distribution system. Water supply for fire protection shall be sized to provide adequate fire suppression as required by the building population and fire protection requirements. Pumps for Fire protection may be required. See Fire Protection ESR D40 and UFC 3600 10N.

Water pipes used for fire protection shall be UL listed. Provide adequate thrust restraint either by restrained joints or by concrete thrust blocks. Provide a post indicator valve on the service line.

A water meter on each proposed service line is required. Provide type of meter and remote reading as required by the utility provider.

Backflow prevention is required for each building. If the building has a dedicated mechanical room, the backflow preventers shall be placed in an accessible location in this room.

Fire hydrants shall be installed and spaced in accordance with UFC 3-600-01, *Fire Protection Engineering for Facilities*.

G301005 FIRE PROTECTION WATER STORAGE

Not Used.

G301006 NON-POTABLE WATER DISTRIBUTION

Not used.

G301007 PUMPING STATIONS

Not Used.

G301008 PACKAGED WATER TREATMENT PLANTS

Not Used.

G301090 OTHER WATER SUPPLY

Not used.

G3020 SANITARY SEWER

The new sanitary sewer system is an extension of the existing sanitary sewer collection system. The existing sanitary sewer collection system serving the project site is owned by the federal government. Provide the new sanitary sewer system and connections to the existing sanitary sewer collection system in accordance with UFC 3-200-10N, Civil Engineering; the utility provider's requirements; and the state sewerage regulations; whichever is more stringent. A drawing showing the existing sanitary sewer system in the project vicinity is included in Part 6, Attachments.

Notify the utility provider of the additional wastewater flow generated by the proposed facility. Provide a copy of all correspondence with the utility provider to the Government Civil Reviewer.

Provide connection from each BEQ to the existing sanitary sewer system at the optimum point(s) practical. Contractor shall confirm sufficient capacity in the existing system to handle the additional flow down-line from the connection point. Final approval from the Government's Civil/ Mechanical Reviewer and the Contracting Officer must be obtained for the specific sanitary connection point.

G302001 SANITARY SEWER PIPING

Provide sanitary sewer piping, fittings, and accessories as required for project completion.

Provide exterior corrosion protection on metallic pipe lines.

G302002 SANITARY SEWER MANHOLES & CLEANOUTS

Provide precast concrete manholes only.

G302003 LIFT STATIONS AND PUMPING STATIONS

Not Used.

G302004 PACKAGED SANITARY SEWER TREATMENT PLANTS

Not Used.

G302005 SEPTIC TANKS

Not used.

G302006 DRAIN FIELDS

Not used.

G302090 OTHER SANITARY SEWER

Not used.

G3030 STORM SEWER

The new storm sewer system is an extension of the existing storm sewer system. The existing storm sewer system serving the project site is owned, by the federal government. Provide the new storm sewer system and connections to the existing storm sewer system in accordance with UFC 3-200-10N, *Civil Engineering*; the utility provider's requirements; and the state stormwater management laws and regulations; whichever is more stringent.

Provide connection to the existing storm sewer collection system at a suitable point of connection. Confirm that the existing outfall has adequate capacity to receive the additional stormwater flow generated by the project. A drawing showing the existing general stormwater drainage pattern in the project area is included in Part 6, Attachments.

Vehicle wash areas are not to be provided.

G303001 STORM SEWER PIPING

The following materials for storm sewer piping will not be allowed: ductile iron, corrugated steel, and corrugated aluminum.

As required in other sections of this RFP, for subsurface rain leader collection, provide PVC, corrugated HDPE or reinforced concrete storm drain pipe with a minimum pipe size of 6".

For all other drainage systems, provide reinforced concrete storm sewer piping with a minimum storm sewer pipe size of 15".

G303002 STORM SEWER STRUCTURES

Provide precast or cast-in-place concrete structures. Provide light duty frames and grates/covers for structures located outside of proposed or future paved areas. Provide H-20 load rated frames and grates/covers for all structures located within proposed or future roadways or paved areas.

G303003 LIFT STATIONS

Not used.

G303004 CULVERTS

The following materials for culvert piping will not be allowed: PVC ductile iron corrugated steel corrugated aluminum HDPE.

G303005 HEADWALLS

Headwalls may be used as required.

G303006 EROSION & SEDIMENT CONTROL MEASURES

Provide permanent and temporary Erosion and Sediment Control measures and a State of North Carolina approved plan for all areas being developed with this project in accordance with the state of North Carolina requirements. See Part 3, Project Program, UFC 3-200-10N, *Civil Engineering* and Part 4 (PTS) paragraph G10-1.10 for specific requirements.

G303007 STORMWATER MANAGEMENT

A stormwater management facility will be required for this project to include stormwater quality and quantity. Storm water management is required for all new impervious areas being developed with this project. Provide permanent and temporary elements required and obtain permits from NCDENR. See Part 3, Project Program, UFC 3-200-10N, Civil Engineering and Part 4, paragraph G303007 for specific requirements.

The use of Low Impact Development (LID) is required for the project to achieve no net increase in storm water volume resulting from the 95th percentile local design storm. The following LID features shall be considered: bioretention facilities, filter/buffer strips, grassed swales, bioretention swales, wet swales, cisterns, infiltration trenches, rain gardens, permeable pavement/pavers, rainwater harvesting, rain barrels and tree box filters. Strong consideration shall be given to the capture of rainwater for flushing toilets and washing vehicles. In such case, a connection to the storm water system shall be provided to receive overflow from the rainwater cistern storage tank(s) when fill capacity is exceeded. See ESR D209004.

If State LID criteria is not available, refer to Low-Impact Development Design Strategies, An

Integrated Design Approach http://www.epa.gov/owow/nps/lidnatl.pdf published by U.S. Environmental Protection Agency, Washington, D.C. and UFC 3-210-10 Low Impact Development. Additional resources may be found at http://www.epa.gov/owow/nps/lid/ , and at www.lowimpactdevelopment.org/index.html .

The Designer of Record (DOR) shall evaluate the drainage conditions and submit stormwater management calculations demonstrating compliance with LID, LEED and NCDENR requirements.

G303090 OTHER STORM SEWER

Not Used.

G3040 HEATING DISTRIBUTION

Heat distribution systems shall be provided in accordance to the North Carolina Mechanical building codes, UFCs, Cherry Point mechanical policy, Cherry Point AE Design Guide, and mechanical engineering UFC draft, UFC 3-400-10N. Systems shall be provided for expansion, system pressure, and resulting stress. A system safety factor shall be provided.

G304003 UNDERGROUND HOT WATER SYSTEMS

Provide direct buried, pre-engineered, factory pre-fabricated, pre-insulated piping systems with steel or copper carrier pipe with polyurethane insulation and a PVC jacket. Piping shall have expansion loops. Provide warning and identification tape for underground piping. Provide manufacturer certification that the system meets system application, specifications, and manufacturer recommendations.

G304004 UNDERGROUND STEAM SYSTEMS

Provide direct buried, pre-engineered, factory pre-fabricated, pre-insulated, drainable/dryable steam and condensate piping systems. The steam and condensate system shall connect to the existing underground steam and condensate piping systems. Provide all required modifications at existing steam pits to connect the new system. Provide new steam pits to replace the existing steam pits that were removed. Provide drip tee offsets for steam trap stations on both underground steam and condensate lines. At drip tee offsets, provide a fiberglass protective steam trap covers with stainless trim with hinged door at drip tee offsets with steam traps. Provide warning and identification tape for underground piping. Provide expansion loops. Refer to section G10 for relocation of utilities including steam and condensate.

Systems shall consist of a steel service pipe with polyurethane insulation and
a high-density polyethylene (HDPE) jacket. Provide factory fabricated fittings and components. Field insulation of fittings will not be allowed.

G304005 REINFORCED CONCRETE MANHOLES & VALVE BOXES

Provide concrete manholes for steam and condensate system piping and valves and for making connections to system, for chilled water system valves, hot water valves, and for expansion joints,

G304090 OTHER HEATING DISTRIBUTION

Provide insulated steel steam and condensate piping systems including valves, supports, and anchors in steam pits. Insulation and aluminum jacket shall be rated for outdoors. Insulation shall be calcium silicate. Steam pits shall have sump pumps for controlling the rain water in the pits. The

sump pumps shall be electric and capable of handling high temperature hot water and be capable of withstanding immersion in high temperature hot water. The sump pumps shall pump to open ditches or to storm drainage structures using steel pipe.

G3050 COOLING DISTRIBUTION

G305001 OVERHEAD COOLING SYSTEMS

Provide cellular glass insulated piping system including supports.

Provide concrete support poles.

G305002 UNDERGROUND COOLING SYSTEMS

Provide direct buried, pre-engineered, factory pre-fabricated, pre-insulated piping systems. Piping systems shall consist of a copper carrier pipe with polyurethane insulation and a PVC jacket, piping shall have expansion loops. Provide warning and identification tape for underground piping. Provide manufacturer certification that the system meets system application, specifications, and manufacturer recommendations.

-- End of Section --

6. ENGINEERING SYSTEMS REQUIREMENTS

G40 SITE ELECTRICAL UTILITIES

SYSTEM DESCRIPTION

The site electrical utility system consists of all power and telecommunications and fiber optic cabling from the existing distribution system point of connection including all connections, accessories and devices as necessary and required for a complete and usable system. This section covers installations up to within 1.5 meters (5 foot) of new (or existing) building location.

GENERAL SYSTEM REQUIREMENTS

Provide an Electrical System complete in place, tested and approved, as specified throughout this RFP, as needed for a complete, usable and proper installation. All equipment shall be installed per the criteria of RFP Section G40, the manufacturer's recommendations, and UFC 3-501-01. Where the word "should" is used in the manufacturer's recommendations, substitute the word "shall".

G4010 ELECTRICAL DISTRIBUTION

Replace feeders A-1 and A-2 in sectionalizing Station "A" and all associated equipment, including but not limited to, 1200A vacuum circuit breakers, Schweitzer relays, current transformers, and conductors (3P2/0N2). (Reference drawings E-2, E-6 and UFGS 26 11 13.00 20 in Part 6 Attachments).

Connect to the existing 12.47kV, three phase, four wire, 60 Hertz electrical power system. The connection point shall be underground at Manhole MH18. Provide a SF-6 15kV Padmount Switch and extend primary to the site underground in ductbank to Padmount Transformers. Locate the transformers for the BEQs in the same area between the buildings and feed them from the new 15kV switch. (See drawing E-1 in Part 6 Attachments).

Verify and coordinate feeder replacements and connection point with MCAS Cherry Point Public Works Electrical Distribution department. Point of contact is Mr. Ralph Merrill @ (252) 466-4725 (office).

The available fault current at the point of connection shall be assumed to be an infinite bus.

G401002 TRANSFORMERS

Provide a separate Padmount Transformer for each BEQ building.

Provide the following features:

1. Three-Phase
2. Dead-Front Design
3. Radial feed loadbreak oil-rotating (LBOR) switch
4. Six bushing wells for loop switching capabilities
5. Three surge arresters
6. Liquid insulated with less-flammable fluid

G401004 OVERHEAD ELECTRIC CONDUCTORS

Provide a three phase overhead pole line as indicated in Section G4010 “Electrical Distribution.”

G401005 TOWERS, POLES, CROSSARMS AND INSULATORS

Poles for overhead power distribution shall be wood.

G401006 UNDERGROUND ELECTRIC CONDUCTORS

Provide a medium voltage and a 600 volt secondary underground electrical power distribution system to meet the connection requirements as indicated in paragraph G4010 “Electrical Distribution”.

G401007 DUCTBANKS, MANHOLES, HANDHOLES AND RACEWAYS

Provide a system of concrete encased ductbanks, handholes and manholes for all underground power wiring.

G401008 GROUNDING SYSTEMS

Provide a complete grounding system for the electrical power distribution system.

G401009 METERING

Provide a separate Kilowatt Demand Meter for each Pad Mounted Transformer.

In addition to the above requirements, provide advanced meter capabilities to measure usage and link with bi-directional communication system to allow interaction with and monitoring of electricity usage. Meters will eventually be part of the Department of Navy Advanced Metering Infrastructure (AMI). The AMI system will establish two way communication w/electric meters & retrieve short time interval (15min) data every hour. It will process data at both local Data Acquisition System and Corporate Meter Data Management levels. The AMI program will become the foundation and key enabler of the Navy’s Smart Grid implementation.

Meter shall meet the following minimum functionalities:

1. All new meters shall meet the specifications established in the NAVAC Advanced Metering Infrastructure.
2. Install N2 Enhanced Data Stream Meters or equal in each building. Local display capability is not required; however, the meters must be fully compatible with the existing energy management control system (EMCS).
3. New meters shall be installed within electrical panels where possible and linked to the building’s N2 network and ultimately to the Station N1 EMCS network via the existing Station dedicated fiber network.
4. Add building floor plan to EMCS graphics including meter location(s) and make interaction similar to existing meters on EMCS.
5. Provide control schematics with applicable diagrams required showing meter interfacing with Station EMCS and required servers/SQL database network interfacing.
6. Incorporate new meter(s) utilizing the network/node mapping layout and add to Station mapping similar to existing interactive system.
7. Provide all necessary trenching, conduit, wiring, terminations, mapping, programming, and graphics necessary to connect the new meter to the existing Station EMCS. Any new control

panels required shall be keyed the same as existing EMCS panels. Use of a wireless frequency band for installation of any equipment under this contract shall be a last resort and must have Station approval and MCAS Cherry Point frequency manager approval.

8. Upgrade existing EMCS graphics as required to incorporate new buildings and meters with displayed information identical to existing buildings and meters.
9. Update Metasys meter pages to account for new buildings.
10. Provide individual meter trending capability.
11. For final acceptance, perform Performance, Verification, and Testing at Bldg 87 on all meters and on all associated Itron and Metasys software pages.
12. Demonstrate system functionality and show completion of all newly developed programming/graphics.
13. Meters shall be calibrated as necessary to insure overall uniformity of readouts.

Contractors shall verify that the meters installed on any building site is compatible with the base-wide metering system with respect to the types of meters selected and the method used to program the meters for initial use. Software and meter programming tools will be necessary to set up the meters. New software tools different from the meter programming methods currently used by base personnel will require separate approval for use. Where RF Mesh technology is used as the communication method, all electric meters shall be purchased with “repeater” functionality.
Contact Bill Anderson, NAVFAC ESC, at bill.anderson1@navy.mil for additional info.

G4020 SITE LIGHTING

Provide site lighting for exterior including underground distribution, handholes, grounding, poles, fixtures and controls as required for a complete and usable system.

G402001 EXTERIOR LIGHTING FIXTURES AND CONTROLS

Provide LED type lighting fixtures, complete with lamps, mounted on each facility.

Provide an automatic lighting control system for exterior lighting fixtures utilizing lighting contactors, time switches, and photocell switches such that lighting will automatically turn “ON” at dusk and turn “OFF” at dawn.

Provide exterior LED lighting for parking areas, recreational areas, and picnic shelters.

LED luminaries’ shall meet all the requirements of DOE "Energy Star Criteria" and shall have an Energy Star label.

G402004 LIGHTING POLES

Provide direct set concrete poles for site lighting.

G402005 UNDERGROUND ELECTRIC CONDUCTORS

Provide a complete underground distribution system for all site lighting systems.

G402006 DUCTBANKS, MANHOLES AND HANDHOLES

Provide a direct buried conduit underground system including conduits and handholes to meet the connection requirements indicated in paragraph G4020 “Site Lighting”.

G402007 GROUNDING SYSTEMS

Provide a complete grounding system for all site lighting systems.

G4030 SITE COMMUNICATION AND SECURITY

Provide a site communication and security system including, but not necessarily limited to, Voice and Data Telecommunications Systems, and Cable Television (CATV) Systems including all conduit and wiring, underground structures, termination equipment, poles and structures, and grounding systems as required for a complete and usable system.

G403001 TELECOMMUNICATIONS SYSTEMS

The connection point for the site telecommunications systems shall be underground at Manhole A1802 and extended to the project site underground in a system of manholes and ductbank to the telecommunications equipment room.

Provide a 100 pair copper and a 24 strand single mode fiber optic cable between the connection point and each building entrance facility.

Provide 3 empty 103 mm (4 inch) conduits, 1 for copper, 1 for fiber, and 1 spare. Provide 2-3 cell fabric innerducts for fiber conduit.

All telecommunications installation shall be coordinated with MCAS Cherry Point Base Telephone. (TISD) Point-of-contact is Mr. George Cronk @ (252) 466-6661 (office).

G403002 CABLE TV SYSTEMS (CATV)

Extend CATV service from CATV connection point to Manhole A1802 in 103mm (4 inch) conduit, with pullstrings for installation of cable television (CATV) wiring. Coordinate connection point with CATV service provider Time Warner Communications, Tim Engel @ (910) 332-7862. Time Warner will provide appropriate cabling from connection point into the communications equipment room.

G403003 CABLES AND WIRING

Cables and wiring for site telecommunications and security systems shall be as indicated in their respective categories.

G403004 DUCTBANKS, MANHOLES AND HANDHOLES

Provide a system of concrete encased ductbanks and manholes for site telecommunications.

G403008 OTHER COMMUNICATION AND ALARM

Refer to Section D503090 OTHER COMMUNICATIONS AND ALARM SYSTEMS for Mass Notification System (MNS) requirements.

G403009 GROUNDING SYSTEMS

Provide a complete grounding system for all site communications and security systems.

-- End of Section --

THIS PAGE HAS BEEN INTENTIONALLY LEFT BLANK

PART 4

PERFORMANCE TECHNICAL SPECIFICATIONS (PTS)

THIS PAGE HAS BEEN INTENTIONALLY LEFT BLANK

SECTION A10

FOUNDATIONS
1/10

A10 GENERAL

A10 1.1 DESIGN GUIDANCE

Provide the design and installation in accordance with the following references. This Performance Technical Specification (PTS) adds clarification to the fundamental requirements contained in the following Government Standards. The general requirements of this PTS section are located in PTS Section Z10, *General Performance Technical Specification*.

A10 1.1.1 Government Standards

Unified Facilities Criteria (UFC)

UFC 3-100-10N, *Architecture*

UFC 3-220-01N, *Geotechnical Engineering Procedures for Foundation Design of Buildings and Structures*

UFC 3-301-01, *Structural Engineering*

Unified Facilities Guide Specifications (UFGS)

UFGS Section 31 23 00.00 20 *Excavation and Fill*

A10 1.1.2 Non Government Standards

International Building Code (IBC)

A10 1.2 GENERAL REQUIREMENTS

A10 1.2.1 Earthwork

The Designer of Record shall prepare the following UFGS Specification as part of the project specification and shall include the prepared specification section in the design submittal for the project:

Section 31 23 00.00 20 *Excavation and Fill*

A10 1.2.2 Geotechnical Report

A10 1.2.2.1 Subsurface Soils Information

Any provided subsurface soil information is included for the contractor’s information only, and is not guaranteed to fully represent all subsurface conditions. The data included in this RFP is to assist in proposal preparation. Contractor shall perform, at his expense, such subsurface exploration, investigation, testing, and analysis as his Designer of Record deems necessary for the design and construction of the foundation system.

A10 1.2.2.2 Contractor-provided Geotechnical Engineer

The Contractor is required to retain a Geotechnical Engineer experienced and licensed in the geographic region of the project to interpret any provided data as related to his design concept and develop requirements for bidding. Requirements stated in Parts 3 and 4 of the RFP take precedence over any content of any included geotechnical report. Additional requirements for the geotechnical design of this project are provided elsewhere in this RFP.

All work by the Contractor-provided Geotechnical Engineer at the project location shall be coordinated with the Contracting Officer and shall not interfere with normal base operations. When providing the Foundation Work Design submittal, provide the Contractor's Geotechnical Report (an Adobe Acrobat PDF version on CD and two printed copies) for review and record keeping purposes. The report shall become the property of the Government. Provide the Geotechnical reports generated during construction, such as pile load tests or PDA results, pile driving results and analysis, to the Contracting Officer (an Adobe Acrobat PDF version and two printed copies) for record keeping purposes.

A10 1.2.2.3 Contractor-Provided Geotechnical Report

Submit a written Geotechnical report based upon Government-provided subsurface investigation data, and all additional field and laboratory testing, accomplished at the discretion of the Contractor's Geotechnical Engineer. The Geotechnical Report shall include the following:

a. The project site description, vicinity map, and site map indicating the location of borings and any other sampling locations. Provide notes explaining any abbreviations or symbols used

b. Results of all applicable field and laboratory testing, whether Government or Contractor-provided. Address existing subsurface conditions, selection and his design of the foundation and floor slab, all underground construction including utility installation and all other site-specific requirements (such as soil stabilization and slope stability).

c. Engineering analysis, discussion, and recommendations addressing:

1. Settlement analysis. Settlement shall be limited as required in EM 1110-1-1004, *Settlement Analysis*
2. Bearing Capacity Analysis.
3. Foundation selection and construction considerations (shallow, deep, special); dimensions, and installation procedures.
4. Site preparation (earthwork procedures and equipment), compaction requirements, building slab preparation (as applicable), soil sensitivity to weather and equipment, groundwater influence on construction, mitigation of expansive soils or liquefaction potential, slope stability dewatering requirements, and other necessary instructions.
5. Sheeting and shoring considerations, as applicable
6. Pavement design calculations with parameters defined, actual or assumed, and recommended thicknesses and materials, whether for design or for proposed modifications to the RFP provided pavement design

7. Haul routes and stockpile locations for earthwork, as applicable.
8. Calculations to support conclusions and recommendations.
9. Recommendations shall be presented on a structure-by-structure Basis.

The Geotechnical Report shall be signed by the Contractor-provided Geotechnical Engineer.

The submitted report shall be accompanied by a cover letter identifying any report recommendations of the report proposed to be adopted into the design which are interpreted by the Contractor as a change condition to the Geotechnical or Pavement related requirements of the RFP.

A10 1.2.2.4 Geotechnical Site Data required in Design Drawings

The Contractor's final design drawings shall include the Government-provided subsurface data presented in the RFP as noted below, as well as all additional borings and laboratory test data results performed by the Contractor. The data provided shall include:

a. Logs of Borings and related summary of laboratory test results and groundwater observations. Provide 24-hour groundwater observations for at least 20% of the borings, minimum one boring. Provide notes explaining any abbreviations or symbols used and describing any special site preparation requirements.

b. The locations of all borings shall be indicated on the drawings. The applicable design drawings shall be revised to reference the Contractor’s Geotechnical Report as being a basis for design.

A10 1.2.3 Pile Driver Analyzer (PDA)

If deemed necessary by the Designer-of-Record's geotechnical engineer, the dynamic wave equation method of analysis, pile driver analyzer, shall be used to validate pile and pile hammer compatibility, establish pile driving criteria, establish terminal penetration resistance, or verify as-driven capacity of the pile. The PDA or static load test(s) shall be required for piles with required allowable design capacity equal to or greater than 40 tons.

A10 1.3 PERFORMANCE VERIFICATION AND ACCEPTANCE TESTING

Verification of satisfactory construction and system performance of the foundations shall be via Performance Verification Testing, and by field inspection, as detailed in this section of the RFP and in UFGS Section 01 45 00.05 20. Provide special tests and special inspections in accordance with UFGS Section 01 45 00.05 20, *Design and Construction Quality Control*.

A10 1.3.1 Earthwork

Perform quality assurance for earthwork in accordance with IBC Chapter 17 and UFGS Section 31 23 00.00 20. A competent person, as defined by COE EM 385-1-1, under supervision of registered Professional Engineer is required to provide inspection of excavations and soil/groundwater conditions throughout construction. The Engineer shall be responsible for performing periodic site visits throughout construction to assess site conditions. The Engineer, with the concurrence of the contractor and the Contracting Officer, shall update the excavation, sheeting, shoring, and dewatering plans as construction progresses to reflect actual site conditions and shall submit the updated plan and a written report (with professional stamp) at least monthly informing the Contractor and the Contracting Officer of the status of the plan and an accounting of Contractor adherence to the plan; specifically addressing any present or potential problems. The Engineer shall be available to meet with the Contracting Officer at any time throughout the contract duration.

A10 1.3.2 Piles

If piles are required, perform quality assurance for pile construction in accordance with UFC 1-200-01, *General Building Requirements*. Pile installation procedures and installed piles shall be inspected and found to be in compliance with these specifications prior to acceptance of the work.

Install test piles as directed by the Contractor's Geotechnical Engineer. Pile load tests, if required, shall be performed in accordance with UFC 1-200-01. Test pile installation procedures shall be as directed by the Contractor's Geotechnical Engineer. Results of the pile test program and final pile installation criteria shall be submitted to the Contracting Officer prior to installation of the production piles. If deemed necessary by the Designer-of-Record's Geotechnical Engineer, the dynamic wave equation method of analysis, pile driver analyzer, shall be used to validate pile and pile hammer compatibility, establish pile driving criteria, establish terminal penetration resistance, or verify as-driven capacity of the pile. The PDA or static pile load test (ASTM D 1143) shall be required for piles with an allowable design capacity equal to or greater than 40 tons. When required, perform PDA on all indicator or test piles. Perform CAPWAP analysis on at least one test (indicator) pile to determine capacity with a minimum three day set-up and develop pile installation criteria.

A10 1.4 DESIGN SUBMITTALS

Design submittals shall be in accordance with Z10, *General Performance Technical Specifications*, UFGS section 01 33 10.05 20, *Design Submittal Procedures*, UFC 1-300-09N, *Design Procedures* and UFC 3-220-01N, *Geotechnical Engineering Procedures for Foundation Design of Buildings and Structures,* IBC 2006*, International Building Code*.

UFGS sections listed below or in the body of the PTS text are to be used by the Designer of Record (DOR) as a part of the design submittal. The DOR shall edit these referenced UFGS sections and submit them as a part of the design submittal specification. Edit the specification sections in accordance with the limitations stated in PTS section Z10, *General Performance Technical Specifications*.

UFGS Section 31 23 00.00 20 *Excavation and Fill*

A10 1.5 CONSTRUCTION SUBMITTALS

Submit construction submittals in accordance with PTS Section Z10, *General Performance Technical Specifications*. In addition to the Z10 requirements, the Designer of Record (DOR) shall approve the following submittals as a minimum:

All structural elements necessary for construction

Contractor-provided geotechnical report

Controlled fill or backfill material tests

Test pile and production pile installation records

Pile load testing reports

As-Built drawings - Include a statement on the drawings indicating the method used to verify the allowable design capacity of the piles (load tests or PDA).

A1010 STANDARD FOUNDATIONS

A1010 1.1 SHEETING AND SHORING

Provide sheeting and shoring as required. Sheeting and shoring plans shall be signed by the Contractor's Geotechnical Engineer.

A1010 1.2 TERMITE CONTROL

A1010 1.2.1 Termite Control Barrier System

Formulate and apply termiticide in accordance with the manufacturer's label directions. The termiticide label shall bear evidence of registration by the U.S. Environmental Protection Agency or appropriate requirements of the host country.

Apply termiticide to the soil that will be covered by or lie immediately adjacent to the building(s) and structure(s), providing a protective barrier against subterranean termites.

Maintain the Pest Management Maintenance Record, DD Form 1532-1 and submit the Pest Management Report, DD Form 1532 as required.

Applicator(s) shall be licensed or certified by the Federal government or the state or the host country, as applicable.

A1010 1.2.2 Warranty

Furnish a 3 year written warranty against infestations or re-infestation by subterranean termites of the buildings or building additions constructed under this contract. Perform annual inspections of the building(s) or building addition(s). If live subterranean termite infestation or subterranean termite damage is discovered during the warranty period, and building conditions have not been altered in the interim, the Contractor shall:

a. Perform treatment as necessary for elimination of subterranean termite infestation;
b. Repair damage caused by termite infestation;
c. Reinspect the building approximately 180 calendar days after the repair.

A1010 1.2.3 Visual Inspection Guide

To maintain resistance to termites, complete the system and do not disturb, penetrate or damage during the remaining contract time period. Provide Manufacturer's Guidance for performing a visual assessment of the installed system to ensure the system provides the designed termite physical barrier.

A1010 1.3 WALL FOUNDATIONS

Provide foundation walls as required in accordance with the requirements of this section and other portions of this RFP.

A1010 1.4 COLUMN FOUNDATIONS AND PILE CAPS

Provide column foundations or pile caps and grade beams as required in accordance with the requirements of this section and other portions of this RFP.

A1010 1.5 PILE FOUNDATIONS

Where piles are required, design, install, and test piles (including sheet piles, as applicable) in accordance with UFC 1-200-01, except as noted otherwise. Verification of pile capacity is required. A static load test in accordance with the standard ASTM procedure is required to verify each capacity over 40 tons. Verification of capacities below 40 tons shall be based on the test pile driving data. Alternate procedures may be used only with the Contracting Officer's permission. Provide piles in accordance with the requirements of the Contractor's Geotechnical Engineer, and the following paragraphs.

A1010 1.5.1 DRIVING EQUIPMENT

Install piles (including sheet piles, as applicable) to the required tip elevation and capacity with the appropriate equipment as recommended by the Contractor's Geotechnical Engineer. Pile hammer shall be of sufficient weight and energy to suitably install piles without damage.

Drive production piles with the same hammer, cap block, and cushion materials, and using the same operating conditions as test piles, including pre-augering and spudding.

Pile driving equipment shall match the equipment assumptions on which the pile driving formulae used to determine blow counts are based.

A1010 1.5.2 INSTALLATION TOLERANCES

Locate the center of pile butts not more than four horizontal inches from the location indicated at cutoff elevation. Manipulation of the piles is not permitted. In addition to the stated tolerances, the clear distance between the heads of piles and the edges of pile caps shall be a minimum of five inches.

Locate top of sheet piles at cutoff elevation within 1/2 inch horizontally and 2 inches vertical of the location indicated. Manipulation of the piles is not permitted.

A variation of not more than 2 percent from the vertical for plumb piles, or not more than 4 percent from the required angle for batter piles will be permitted.

A1010 1.5.3 MISLOCATED AND DAMAGED PILES

Remove and replace with new piles those piles that are damaged, mislocated, or installed out of alignment tolerance or provide additional piles, installed as directed by the Contractor's Geotechnical Engineer and approved by the Contracting Officer, at no additional cost to the Government.

A1010 1.5.4 PILE SPACING

For cast-in-place concrete or augercast piles, provide adequate distance, as determined by the Contractor's Geotechnical/Structural Engineer, between freshly placed concrete and other pile installation operations to avoid damage to concrete.

A1010 1.5.5 COATED PILES

Handle treated or coated piles so as to protect the treatment or the coating. Repair damage or defects to treatment or coating.

A1010 1.6 CAISSONS

If required, provide caissons as required in accordance with the requirements of this section and other portions of this RFP.

A1020 SPECIAL FOUNDATIONS

A1020 1.1 USE OF SPECIAL FOUNDATIONS

The use of special foundations must be approved by the Contracting Officer and supported by provision of all design rationale, data, calculations, and any other relevant information. Include proposed installation contractor with the installer’s proposed quality control measures.

A1020 1.2 RAFT FOUNDATIONS

If required, provide a raft foundation as required to achieve the requirements of this section and other portions of this RFP and as required by the Contractor’s Geotechnical Engineer.

A1020 1.3 PRESSURE-INJECTED GROUTING

If required, pressure-inject grout as required in accordance with the requirements of this section and other portions of this RFP.

A1030 UNDERPINNING

If required, underpin existing construction as required in accordance with the requirements of this section and other portions of this RFP.

A1040 DEWATERING

Dewater site for foundation construction as required by soil conditions and local subsurface and surface water, including rainfall, and considering any potential adverse impact on adjacent facilities, including settlement. Dewatering requirements and methods shall be established by the Contractor’s Geotechnical Engineer, based on his subsurface exploration and investigation.

A1050 SLAB ON GRADE

A1050 1.1 STANDARD SLAB ON GRADE

If allowed by site conditions and recommended by the Contractor-provided Geotechnical Engineer, provide standard concrete slab on grade to meet the required loading requirement in accordance with the requirements of this section and other portions of this RFP.

Floor slab on grade shall be designed and constructed in accordance with EM 1110-1-1904, Settlement Analysis and so that any settlement of the floor slab shall not result in harmful distortion of the floor, nor vertical misalignment of the floor with other building components (such as doorways and trenches), building utilities or with pile-supported building elements. If these above conditions cannot be met, provide a pile supported slab.

A1050 1.2 TRENCH DRAINS

Trench drains shall be constructed of reinforced concrete with water proof joints and seals to prevent ground water infiltration.

A1050 1.3 PITS AND BASES

Pits and bases shall be constructed of reinforced concrete with water proof joints and seals to prevent ground water infiltration.

A1050 1.4 BLOCK OR BOARD PERIMETER INSULATION

Provide only thermal insulating materials recommended by manufacturer for perimeter insulation. Provide one of the board, or block, thermal insulations listed below conforming to the following standards:

a. Cellular Glass: ASTM C 552
b. Extruded Preformed Cellular Polystyrene: ASTM C 578

The thickness of insulation and thermal resistance value shall be sufficient to meet the applicable building code and energy budget for the facility.

A1060 PERIMETER FOUNDATION DRAINAGE

Perimeter drainage system shall be provided to remove water away from the foundation of the facility and to be deposited in the storm sewerage system of the site. Pipe for the foundation drainage system shall be of the type specified, shall be perforated, and shall be of a size sufficient to remove water from the foundation successfully. Provide one, or a combination of more than one, of the following types of pipe:

a. Corrugated Polyethylene (PE) Drainage Pipe: ASTM F 405, heavy duty, for pipe 3 to 6 inches in diameter inclusive; ASTM F 667 for pipe 8 to 24 inches in diameter. Fittings shall be manufacturer's standard type and shall conform to the indicated specification.
b. Acrylonitrile-Butadiene-Styrene (ABS) Pipe: ASTM D 2751, with a maximum SDR of 35.
c. Polyvinyl Chloride (PVC) Pipe: ASTM F 758, Type PS 46, ASTM D 3034, or ASTM F 949 with a minimum pipe stiffness of 46 psi.

Installation shall include wrapping the pipe with filter fabric sock and careful bedding of the pipe with appropriate fill material to ensure that the pipe does not become filled with the bedding material.

-- End of Section --

SECTION B10

SUPERSTRUCTURE
1/10

B10 GENERAL

B10 1.1 DESIGN GUIDANCE

Provide the design and installation in accordance with the following references. This Performance Technical Specification (PTS) adds clarification to the fundamental requirements contained in the following Government Standards. The general requirements of this PTS section are located in PTS Section Z10, *General Performance Technical Specification*.

B10 1.1.1 Government Standards

Unified Facilities Criteria (UFC)

UFC 3-100-10N, *Architecture*

UFC 3-301-01, *Structural Engineering*

B10 1.2 PERFORMANCE VERIFICATION AND ACCEPTANCE TESTING

Verification of satisfactory construction and system performance shall be via Performance Verification Testing, as detailed in this section of the RFP. Provide special tests and special inspections in accordance with UFGS Section 01 45 00.05 20, *Design and Construction Quality Control*.

B10 1.3 DESIGN SUBMITTALS

Design submittals shall be in accordance with Z10, General Performance Technical Specifications, UFGS section 01 33 10.05 20, *Design Submittal Procedures*, UFC 1-300-09N, *Design Procedures*, UFC 3-100-10N, *Architecture*, and UFC 3-301-01, *Structural Engineering*.

B10 1.4 CONSTRUCTION SUBMITTALS

Submit construction submittals in accordance with PTS Section Z10, *General Performance Technical Specifications*. In addition to the Z10 requirements, the Designer of Record (DOR) shall approve the following submittals as a minimum:

All structural elements necessary for construction of the superstructure

B1010 FLOOR CONSTRUCTION

B101001 STRUCTURAL FRAME

Structural frame elements may include columns, girders, beams, trusses, joists, moment frames, shear walls, and bracing. See Section B20, *Exterior Enclosure*, for additional requirements for exterior walls used as load-bearing walls or shear walls.

B101002 STRUCTURAL INTERIOR WALLS

Provide structural interior walls as required in accordance with the requirements of this section and other portions of this RFP. See Section C10, *Interior Construction*, for additional requirements.

B101003 FLOOR DECKS AND SLABS

If required, provide floor decks as required in accordance with the requirements of this section and other portions of this RFP.

B101005 BALCONY CONSTRUCTION

Design and construct exterior balconies to drain and with the top of the balcony high-point below the interior floor elevation as required for flashing.

B101006 RAMPS

Provide ramps as required in accordance with the requirements of this section and other portions of this RFP.

B101007 FLOOR RACEWAY SYSTEMS

See Section D50, Electrical, for floor raceway systems.

B1020 ROOF CONSTRUCTION

B102001 STRUCTURAL FRAME

Structural frame elements may include columns, girders, beams, trusses, joists, moment frames, shear walls, and bracing. See Section B20, *Exterior Enclosure*, for additional requirements for exterior walls used as load-bearing walls or shear walls.

B102002 STRUCTURAL INTERIOR WALLS

Provide structural interior walls as required in accordance with the requirements of this section and other portions of this RFP. See Section C10, *Interior Construction*, for additional requirements.

B102003 ROOF DECKS AND SLABS

Provide roof deck as required in accordance with the requirements of this section and other portions of this RFP.

B102004 CANOPIES

Provide canopies as required in accordance with the requirements of this section and other portions of this RFP.

-- End of Section --

SECTION B20

EXTERIOR ENCLOSURE
1/10

B20 GENERAL

B20 1.1 DESIGN GUIDANCE

Provide the design and installation in accordance with the following references. This Performance Technical Specification (PTS) adds clarification to the fundamental requirements contained in the following Government Standards. The general requirements of this PTS section are located in PTS Section Z10, *General Performance Technical Specification*.

Industry standards, codes, and Government standards referenced in the section text that are not found in the Unified Master Reference List (UMRL) in the Construction Criteria Base (CCB) at the Whole Building Design Guide Website , are listed below for basic designation identification. Comply with the required and advisory portions of the current edition of the referenced standard at the time of contract award.

B20 1.1.1 Industry Standards and Codes

NATIONAL LUMBER GRADES AUTHORITY (NLGA)

B20 1.1.2 Government Standards

Military Handbook 1013/1A, Design Guidance for Physical Security of Facilities

UNIFIED FACILITIES CRITERIA (UFC)

UFC 3-100-10N, *Architecture*

UNIFIED FACILITIES GUIDE SPECIFICATIONS (UFGS)

UFGS 08 34 16.10, *Steel Sliding Hangar Door*

UFGS 08 34 16.20, *Vertical Lift Fabric Door*

B20 1.2 PERFORMANCE VERIFICATION AND ACCEPTANCE TESTING

Verification of satisfactory exterior enclosure system performance shall be via Performance Verification Testing, and by field inspection as detailed in this section of the RFP. Provide special tests and special inspections in accordance with UFGS Section 01 45 00.05 20, *Design and Construction Quality Control*. The Contractor shall pay the cost of all testing.

B20 1.2.1 Required Brick Masonry Testing and Field Samples

a. Where field testing is required, masonry strength shall be determined in accordance with ACI 530.1.

b. Field Samples: Masonry Panel Requirements - At the job site submit for approval by the Designer of Record, a sample masonry panel minimum 8 feet (2.4 meters) long by 4 feet (1.2 meters) high showing the workmanship, coursing, bond, weep holes, flashing, thickness, anchors, joint reinforcing, wall ties, rigid-board insulation, intersection of walls, bond beams, expansion and control joints, and tooling of joints, range of color, texture of masonry, and mortar color; or cold-formed steel framing, insulation, fiberglass-faced gypsum sheathing, air barrier, vapor barrier, sealant, masonry ties and anchors, and tooling of joints, the range of color and texture of brick veneer, and the color of mortar. The sample panel shall be protected from damage and shall remain at the site until masonry work is complete and approved, at which time the panel shall be removed from the site. If there are windows or curtain walls in the project which interface with the masonry, a cut-away sample window or curtain wall mock-up shall be installed in the masonry field panel, with all accessories, finishes, and trim (see B20 1.2.4 and 1.2.5). Masonry work shall match the approved sample.

B20 1.2.2 Required Records for Concrete Wall Panels

a. Cast-in-place - Submit to DOR mandatory batch ticket information as ASTM C 94 for each load of ready-mixed concrete.
b. Submit to DOR commercial testing results in accordance with PCI MNL-117 and as required in paragraph entitled "Sampling and Testing for Precast"

B20 1.2.3 Precast Concrete Wall Panel Surface Finish Sample

Submit to DOR a concrete wall panel sample 12 inches (300 mm) by 12 inches (300 mm) by approximately 1 1/2 inches (38 mm) in thickness, to illustrate quality, color, and texture of both exposed-to-view surface finish and finish of panel surfaces that will be concealed by other construction. Obtain initial approval of color and texture from DOR prior to submission of sample panels.

B20 1.2.3.1 Manufacturing Plant Sampling and Testing for Precast

Plant Quality Control - PCI MNL-117 for PCI enrolled plants. Where panels are manufactured by specialists in plants not currently enrolled in the PCI "Quality Control Program," provide a product quality control system in accordance with PCI MNL-117 and perform concrete and aggregate quality control testing using an approved, independent commercial testing laboratory. Submit test results to the Contracting Officer.

a. Aggregate Tests: ASTM C 33. Perform one test for each aggregate size, including determination of the specific gravity.
b. Strength Tests: ASTM C 172. Provide ASTM C 39 and ASTM C 31/C 31M compression tests. Perform ASTM C 143 slump tests. Mold six cylinders each day or for every 20 cubic yards (15 cubic meters) of concrete placed, whichever is greater. Perform strength tests using two cylinders at 7 days and two at 28 days. Cure four cylinders in the same manner as the panels and place at the point where the poorest curing conditions are offered. Moist-cure two cylinders and test at 28 days.

c. Changes in Proportions: If, the compressive strength falls below that specified, adjust the mix proportions and water content and make necessary changes in the temperature, moisture, and curing procedures to secure the specified strength. Notify the Contracting Officer of all changes.
d. Strength Test Results: Evaluate compression test results at 28 days in accordance with ACI 214 using a coefficient of variation of 20 percent. Evaluate the strength of concrete by averaging the test results (two specimens) of standard cylinders tested at 28 days. Not more than 20 percent of the individual tests shall have an average compressive strength less than the specified ultimate compressive strength.

B20 1.2.3.2 Acceptable Appearance

Refer to *Architectural Precast Concrete* by the Prestressed Concrete Institute, in the "Acceptability of Appearance" paragraph for reasons to reject precast panels. Panels in place may be rejected for any one of the product defects or installation deficiencies remaining after repairs and cleaning have been accomplished. "Visible" means visible to a person with normal eyesight when viewed from a distance of 20 feet (6 meters) in broad daylight.

B20 1.2.4 Window Sample Mock-Up

a. Provide mock up of one (1) typical combination window unit to be used within the project and conduct a field mock-up test in strict compliance with AAMA 502 method A and method B. Each opening will be tested to achieve performance of ASCE 7-02 calculated requirements (PSF or Kg/m2) for water resistance, which shall not exceed .667 % of the products capable water based on AAMA 101/I.S. 2. Allowable rates of air leakage for field testing shall be 1.5 times applicable AAMA 101/I.S.2 rate for the Product Type and Performance Class.
b. Opening is to be tested under "Quality Control" testing by a designated independent testing agency.

1) Schedule mock up installation sufficiently in advance of need to allow adequate time for cure of sealants, testing, and reconstruction, if needed, without delaying the project.

2) Build mock up in building envelope wall in location selected by Owner and Architect.

3) Modify mock up construction and perform additional tests as required to achieve specified minimum acceptable results. If corrections are not adequate, construct new mock up, at written direction of Owner and Architect. Co-ordinate construction of mock up with other involved trades.

4) Approved mock ups may become part of completed Work if undisturbed at time of Substantial Completion.

5) Flood test Mockup window subsill and obtain approval of DOR prior to installing window unit.

B20 1.2.5 Curtain Wall Systems Field Sample and Testing

a. At the job site submit for approval by the Designer of Record, a sample curtain wall installation which may be a cut-away portion of a curtain wall, if appropriate, to show the construction, the workmanship, tie-in to building, infiltration and moisture barriers, wrap, flashing, head, window unit installation where required, sill, lintel if required, interior and exterior trim, anchors and reinforcing, and sealants.

b. Provide mock up of (1) designated Curtain Wall System unit to be used in conducting a field mock-up test in strict compliance with AAMA 503 method A and method B. Each opening will be tested to achieve performance of ASCE 7-05 calculated requirements (PSF or Kg/m2) for water resistance, which shall not exceed the derived water expectation of 0 infiltration at the calculated Design Pressure. Allowable rates of air leakage for field testing shall be .30 CFM/Ft2 of wall area test specimen. Performance test at 6.24 PSF (30.3 Kg/m2) allows .30 cfm/ft2. Opening is to be tested under "Quality Control" testing by a designated independent testing agency.

   1) Schedule mock up installation sufficiently in advance of need to allow adequate time for cure of sealants, testing, and reconstruction, if needed, without delaying the project.

   2) Build mock up in building envelope wall in location selected by DOR.

   3) Modify mock up construction and perform additional tests as required to achieve specified minimum acceptable results. If corrections are not adequate, construct new mock up, at written direction of DOR. Co-ordinate construction of mock up with other involved trades.

   4) Approved mock ups may become part of completed Work if undisturbed at time of Substantial Completion.

The sample curtain wall shall be protected from damage and shall remain at the site until curtain wall construction work is complete and approved, at which time the panel shall be removed from the site. On projects where the curtain wall interfaces with masonry walls, a cut-away sample curtain wall shall be installed with the masonry sample panel. Curtain wall installations shall match the approved sample.

Water Penetration: No water penetration shall occur when the wall is tested in accordance with ASTM E 331 at a differential static test pressure of 20 percent of the inward acting design wind pressure as specified, but not less than 15 psf (80 Kg/m2). Make provision in the wall construction for adequate drainage to the outside of water leakage or condensation that occurs within the outer face of the wall. Leave drainage and weep openings in members and wall open during test.

B20 1.3 DESIGN SUBMITTALS

Design submittals shall be in accordance with Z10, *General Performance Technical Specifications*, UFGS section 01 33 10.05 20, *Design Submittal Procedures*, UFC 1-300-09N, *Design Procedures*, UFC 3-100-10N, *Architecture* and UFC 3-301-01, *Structural Engineering*.

In addition, UFGS sections listed below or in the body of the PTS text are to be used by the Designer of Record (DOR) as a part of the design submittal. If the UFGS products or systems are applicable to the project, the DOR shall edit these referenced UFGS sections and submit them as a part of the design submittal specification. Edit the specification sections in accordance with the limitations stated in PTS section Z10, *General Performance Technical Specifications*.

UFGS 08 34 16.10, *Steel Sliding Hangar Door*

UFGS 08 34 16.20, *Vertical Lift Fabric Door*

B20 1.4 CONSTRUCTION SUBMITTALS

Submit construction submittals in accordance with PTS Section Z10, *General Performance Technical Specifications*. In addition to the Z10 requirements, the Designer of Record (DOR) shall approve the following submittals as a minimum;

Shop drawings for reinforcing steel in masonry walls, doors, door hardware, windows, storefront, curtainwall, glazing, paint, and visible exterior materials

All structural elements necessary for construction

B20 1.4.1 Manufacturer's Verification Inspection Documentation for Galvanized Steel

Manufacturer's verification inspection documentation shall be submitted for all galvanized steel in accordance with ASTM A123, ASTM A-153, and ASTM A-653.

B20 1.4.2 Field Inspection of Field-erected Concrete Panels

a. Perform field inspection of panel welded connections. Furnish the services of AWS-certified welding inspector for erection inspections. Welding inspector shall visually inspect all welds and identify all defective welds.
b. The DOR shall be notified in writing of defective welds, bolts, nuts, and washers within 7 working days of the date of inspection. All defective connections or welds shall be removed and re-welded or repaired as required by the DOR.

B2010 EXTERIOR WALLS

Exterior wall construction shall consist of exterior skin system of non-structural outside face elements with rain-screen back-up wall systems including; flashing (embedded, exposed, and thru-wall), vapor barriers, air barriers, and insulation systems with interior skin system materials to provide a protective finish on the inside face of exterior walls. Provide all components necessary to direct water that would leak through faulty caulk joints to the outside of wall. Provide flashing, window subsill, caulking, and water barriers around wall openings to direct any water that gets behind the outside surface of the exterior door, window, or louver to the exterior of the wall.

All work shall be designed to comply with UFC 3-100-10N, *Architecture*, and UFC 3-301-01, *Structural Engineering*, and the following requirements:

a. Vapor Transmission Analysis - Perform a job specific vapor transmission analysis in accordance with UFC 3-100-10N, Architecture. The conclusion of the analysis shall indicate the appropriate locations of needed vapor retarders, air barriers, and anticipated dew-point locations in the exterior enclosure during different critical times of the year.
b. Maximum Air Infiltration - The maximum allowable air leakage for any material used as part of the air barrier system for the opaque enclosure shall be 0.004 cfm / sf at 1.57 psf (0.02 L/s/MÂ² [liters/second per square meter] at 75 Pa pressure), as tested according to ASTM E 2178 test protocol.
c. Wind Loads - Provide wind load calculations for exterior cladding in accordance with UFC 1-200-01 and UFC 3-301-01 with comparative analysis of the cladding system to be provided.
d. Water Penetration - No water penetration shall occur at a pressure of 8 psf (39 Kg/m2) of fixed area when tested in accordance with ASTM E 331.
e. Insulating Value – The complete wall system shall have a minimum insulating value as required by the building code and as required to meet ASHRAE Standard 90.1 as modified by the Energy Policy Act of 2005.

B201001 EXTERIOR CLOSURE

B201001 1.1 MASONRY VENEER EXTERIOR WALL CLOSURE COMPONENTS

B201001 1.1.1 General Requirements

a. Masonry veneer shall include load bearing and non-load bearing exterior walls of the structure, and shall include colored mortar, special shapes such as sills, headers, trim units and copings of brick masonry, precast concrete, concrete masonry units, or other approved material. The veneer shall be tied to the backup wall system with a system that allows the veneer to move independently of the backup wall system, while being structurally supported. The masonry veneer shall allow for expansion and contraction of the veneer without cracking the exterior material.
b. Use running bond, tooled concave joints and full head joint weeps at 24 inches (610 mm) o.k. in the course immediately above the base flashing. Where rowlocks are permitted, slope rowlocks and project not less than 1/2 inch (13 mm) beyond the face of the wall to form a wash and drip. Where required, provide colored mortar conforming to ASTM C270. Provide special shapes where required.
c. Locate expansion/control joints and seal with proper backing material and ASTM C 920 polyurethane sealant, or preformed foam or rubberized expansion joint closure. Conform to UFC 3-100-10N and BIA Technotes 18, 18A. Joint shall match color of the brick, unless DOR directs otherwise.
d. Conform to ACI 530.1 for masonry veneer installation, including cold weather construction. Antifreeze admixtures are not to be used.
e. Clean the masonry in accordance with manufacturer's instructions and BIA Technote 20.
f. Utilize BIA Technical Notes to design, detail, and construct brick masonry walls. This PTS section amends the BIA documents and takes precedence over similar BIA requirements. Substitute directive language in the place of BIA suggestive language as required in PTS Section Z10, *General Performance Technical Specifications*. The results of these wording substitutions change this document to required procedures.

B201001 1.1.2 Face Brick

a. Brick Masonry Appearance - Do not change source or supply of materials after brick manufacturing work has started. Blend all brick to produce a uniform appearance when installed. An observable "banding" or "layering" of colors or textures caused by improperly mixed brick is unacceptable.
b. Brick Type - Brick shall be ASTM C216, Grade SW, type FBX. ASTM C67 test rating shall be "Not effloresced".

B201001 1.1.3 Split Faced or Ground Faced Masonry

ASTM C 90: If required, provide split faced or ground faced units, or split-ribbed units or scored-faced units.

B201001 1.1.4 Cast Stone Trim Units

a. Cast stone shall be the product of a manufacturer regularly engaged in the manufacture of architectural cast stone (precast concrete building unit) products. Cast Stone shall meet or exceed the requirements of ASTM C 1364.
b. Trim units of cast stone shall include sills, fascia, header units, copings, and other trim units as required by the approved design.

B201001 1.1.5 Wall Cavity

Comply with UFC 3-100-10N and BIA Technical Notes 21A, 21B, 21C, 28B.

B201001 1.1.6 Through-Wall Flashing Components

a. Through-wall flashing with weep holes shall be incorporated in cavity wall construction as required by UFC 3-100-10N and BIA Technotes. Install flashing according to BIA Technotes 7, 7A, 7B, 21A, 21B, 21C, 28B, and SMACNA figures 4-1A and 4-1B. Extend metal drip edge flashing beyond the wall plane using a 1/4 inch (6 mm) preformed 45 degree angle turn down.
b. Flashing material shall be as required by UFC 3-100-10N and the following: Flashing shall be 7 ounce copper flashing with a 3 ounce bituminous coating on each side or a fiberglass fabric bonded on each side of the copper sheet. Sixteen (16) ounce uncoated copper, 28 gauge Type 302 or 304 stainless steel is also acceptable. 'Flexible membrane flashing, plastic or PVC-based membrane flashing is prohibited. Lap and seal turndown solid metal drip edge flashing to through- wall flashing. Refer to "Flashing" in this section to find requirements for non-through-wall flashing.

B201001 1.1.7 Reinforcing in Veneer Layer

Reinforcing in the veneer layer shall be galvanized in accordance with ASTM A 123, ASTM A153, or ASTM A653, Z275 (G90) coating, and be of sufficient size to eliminate damage to the veneer layer from wind and other live and dead loads imposed on the veneer layer.

B201001 1.2 METAL WALL PANEL EXTERIOR CLOSURE

B201001 1.2.1 General Wall Panel Requirements

a. Factory Color Finish – Panels shall have factory applied, baked coating to the exterior and interior of metal wall panels and metal accessories. Exterior finish topcoat shall be of 70 percent polyvinylidene fluoride (PVDF) resin with not less than 0.8 mils dry film thickness (DFT). Exterior primer shall be standard with panel manufacturer with not less than 0.8 mils dry film thickness (DFT). Panels shall have factory applied 70 percent PVDF clear coating of 0.8 mils DFT over the color topcoat and edge coating for projects within 300 feet (91 meters) of a water shoreline or industrial environment. Field-apply 70 percent PVDF clear coat to unfinished panel edges or field cut panels. Interior finish exposed to sun or rain shall be the same coating and DFT as the exterior coating. Interior finish shall be protected from sun or rain exposure.

b. Wall system and attachments shall resist wind loads as determined by ASCE 7, with a factor of safety appropriate for the material holding the anchor. Maximum deflection due to wind on aluminum wall panels shall be 1/60. Maximum deflection due to wind on steel wall panels and girts behind aluminum or steel wall panels shall be limited to 1/120 of their respective spans, except that when interior finishes are used the maximum allowable deflection shall be limited to 1/180 of their respective spans. The structural performance test methods and requirements of the wall system and attachments shall be in accordance with ASTM E 1592.

c. Conformations - Non-insulated steel or aluminum wall panels shall have configurations for overlapping adjacent sheets or interlocking ribs for securing adjacent sheets and shall be fastened to framework using exposed or concealed fasteners, as specified. Length of sheets shall be sufficient to cover the entire height of any unbroken wall surface when the length of run is 30 feet (9 meters) or less. Design provisions shall be made for expansion and contraction. Where required, provide series 305 stainless steel fasteners factory finished to match panels.

d. Shape - Standard V-beam or boxed beam type having 5 to 8 inch (125 mm to 200 mm) pitch for steel panels or 4 to 8 inch (100 mm to 200 mm) pitch for aluminum panels, and 1.5 inch (38 mm) overall depth, exclusive of coating. Other shapes may be considered if approved by the DOR.

B201001 1.2.2 Steel Wall Panels

a. Material and Coating - Form sheets from steel conforming to ASTM A 653/A 653M, Structural Grade 40, galvanized coating conforming to ASTM A 924/A 924M, Class G-90; aluminum-coated steel conforming to SAE AMS 5036; or steel-coated with aluminum-zinc alloy conforming to ASTM A 792/A 792M, except that coating chemical composition shall be approximately 55 percent aluminum, 1.6 percent silicon, and 43.4 percent zinc with minimum coating weight of 0.5 ounce per square foot.

b. Gage - Minimum 22 U.S. Standard Gage for wall panels, but in no case lighter than required to meet maximum deflection requirements specified.

B201001 1.2.3 Aluminum Wall Panels

a. Material and Coating - Form sheets of Alloy 3004 or Alclad 3004 conforming to ASTM B 209 having proper temper to suit respective forming operations.
b. Thickness - Minimum 0.032 inch (0.81 mm) nominal, but in no case thinner than that required to meet maximum deflection requirements specified.

B201001 1.2.4 Insulated Aluminum or Steel Wall Panels

Insulated wall panels shall be steel or aluminum factory-fabricated units with insulating core between metal face sheets securely fastened together and uniformly separated with rigid spacers. Panels shall have a factory color finish. Insulation shall be compatible with adjoining materials and capable of retaining its R-value for the life of the metal facing sheets; and unaffected by extremes of temperature and humidity. The assembly shall have a flame spread rating not higher than 25, and smoke developed rating not higher than 50 when tested in accordance with ASTM E 84. Panels shall be not less than 8 inches (200 mm) wide and shall be in one piece for unbroken wall heights.

Wall panels shall have edge configurations with interlocking ribs for securing adjacent panels. System shall utilize factory fabricated corners and trim pieces at intersections with other materials. Wall panels shall be fastened to framework using concealed fasteners. Installation shall be in accordance with DOR-approved shop drawings and manufacturer's recommendations.

a. Insulated Steel Panels - Zinc-coated steel conforming to ASTM A-653; or Aluminum-zinc alloy coated steel conforming to ASTM A-792, AZ 55 coating. Uncoated wall panels shall be 0.024 inch (0.61 mm) thick minimum.
b. Insulated Aluminum Panels - Alloy conforming to ASTM B209, temper as required for the forming operation, minimum 0.032 inch (0.81 mm) thick.

B201001 1.3 STUCCO EXTERIOR WALL CLOSURE

B201001 1.3.1 Portland cement Plaster

ASTM C150, gray Portland cement Type II with 1/2 inch (13 mm) maximum chopped alkali resistant fiberglass strands, minimum 1.5 percent by weight to cement; 1 1/2 pounds (.68 kg) per sack of cement. Lime shall conform to ASTM C206, Type S. System shall utilize stainless steel or zinc corner beads, J-beads and other accessories.

a. Unless specifically deleted, the system shall utilize an acrylic admixture or coating to give additional moisture suppression to control fungus growth.
b. Sand for Portland Cement Stucco ASTM C 144, except gradation of sand shall conform to the following requirements.

c. Sand Gradation for Basecoats:

Percentage Retained by weight (plus or minus 2 percent) on each sieve

Sieve Size	Min.	Max.
No. 4	0	0
No. 8	0	10
No. 16	10	40
No. 30	30	65
No. 50	70	90
No. 100	95	100

d. Sand for Finish Coats: Natural color and graded within the limits shown above for basecoats, except that the sand shall pass the No. 8 sieve, and for smooth finish the sand shall pass the No. 30 sieve.

e. Mix scratch coat in proportion of one part by volume Portland cement, 3/4 to 1 1/2 parts by volume hydrated lime and 2 1/2 to 4 parts sand (volume of sand per sum of cement and lime). Mix brown coat in proportion of one part by volume Portland cement, 3/4 to 1 1/2 parts by volume hydrated lime and 3 to 5 parts sand (volume of sand per sum of cement and lime). Mix proportions can vary depending on climate and application variations, with the approval of the DOR.

f. Portland Cement Stucco Finish Coat 3 to 5 parts sand (volume of sand per sum of cement and lime).

g. Portland cement plaster application shall be in accordance with ASTM C 926. Furring and lath application shall be in accordance with ASTM C 1063.

h. Bonding Agents: ASTM C 932. Provide for exterior applications to masonry or concrete substrates.

B201001 1.4 EXTERIOR INSULATION AND FINISH SYSTEM (EIFS)

EIMA TM 101 and 01 EIMA TM 101.86: Designate in the project program that EIFS shall be used as the non-primary or the primary exterior finish material for the project. The exterior insulation and finish system (EIFS) shall be a job-fabricated exterior wall covering consisting of sheathing, moisture drainable insulation board system, reinforcing fabric, base coat, finish coat, adhesive, primer, accessories, flashing, sealant, and mechanical fasteners. The system components shall be compatible with each other and with the substrate as recommended or approved by, and the products of, a single manufacturer regularly engaged in furnishing Exterior Insulation and Finish Systems. All materials shall be installed by an applicator trained and approved by the system manufacturer in accordance with DOR-approved shop drawings and manufacturer’s recommendations. EIFS shall be Class PB or Class PM. Class PB EIFS shall not be used in first floor, high traffic areas, or in areas where pedestrians congregate without at least one layer of 20 ounce (567 grams) reinforcing fabric mesh. Use 1/8 inch (4 mm) minimum thickness for PB finish system. Color of the EIFS finish shall be consistent, with no variation noticeable to the DOR. Seal all joints in EIFS in accordance with ASTM C 1481 and as recommended by the manufacturer. Furnish manufacturer's standard warranty for the EIFS. Warranty shall run directly to Government and cover a period of not less than 5 years from date Government accepted the work.

B201001 1.4.1 EIFS System Components

a. Glass Mat Gypsum Sheathing Board - Conform to ASTM C 1177/C 1177M. Nail Pull Resistance: No less than 120 lb (54.4 Kg) when tested in accordance with ASTM C 473.

b. Mechanical Fasteners - Corrosion resistant and as approved by EIFS manufacturer. Select fastener type and pattern based on applicable wind loads and substrate into which fastener will be attached, to provide the necessary pull-out, tensile, and shear strengths.
c. Thermal Insulation - Drainable type. No portion of any layer of insulation shall be less than 3/4 in (19 mm) thick. The maximum thickness of all layers shall not exceed 4 in (101 mm). Insulation Board shall be certified as aged, in block form, prior to cutting and shipping, a minimum of 6 weeks by air-drying, or equivalent. Insulating material shall conform to ASTM C 578 Type I or IV, as recommended by the EIFS manufacturer and treated to be compatible with other EIFS components.
d. Reinforcing Fabric - Reinforcing fabric mesh shall be alkali-resistant, balanced, open weave, glass fiber fabric made from twisted multi-end strands specifically treated for compatibility with the other system materials, and comply with EIMA TM 105.01 and as recommended by EIFS manufacturer.

B201001 1.5 CONCRETE EXTERIOR WALL CLOSURE

B201001 1.5.1 Precast Concrete Wall Panels:

ACI 211.1 and ACI 301: PCI MNL-116 or PCI MNL-117. Concrete shall have a minimum 28-day compressive strength of 4000 psi. Air content of plastic concrete shall be between 4 and 6 percent air by volume. Provide a dosage of air entraining agent, which will produce 19 plus or minus 3 percent air in a 1 to 4 by weight standard sand mortar in accordance ASTM C 185. Provide aggregate in accordance with ASTM C 33. Design for watertight joints, or weeping joints having back-up water penetration protection in precast elements. Cracking potential of precast concrete elements shall be minimized by implementing expansion and control joints in the precast assembly.

Joints shall include properly-sized and placed backing material and fully loaded and tooled sealant joint of no less than 1/4 inch sealant material thickness.

a. Exposed Aggregates - In addition to the above aggregate, facing mixture aggregate, and aggregate for homogeneous panels with exposed aggregate finish, shall be crushed stone.
b. Cement - ASTM C 150.
c. Admixtures - ASTM C 260 for air-entraining admixtures. Other admixtures: ASTM C 494. Certify that admixtures are free of chlorides.
d. Reinforcement - ACI 301.
e. Inserts - ASTM A 47, Grade 32510 or 35018, or may be medium strength cast steel conforming to ASTM A 27/A 27M, Grade U-60-30. Where exposed to moisture, provide inserts hot-dip galvanized after fabrication in accordance with ASTM A-153.
f. Embedded Plates - ASTM A 36/A 36.
g. Flashing Reglets - Fabricate of sheet metal, open-type with continuous groove 1 1/8 inches (28 mm) deep minimum by 3/16 inch (5 mm) wide at opening and sloped upward at 45 degrees. Top surface shall have toothed lip section to anchor upturned edge of metal snap-lock counter flashing when inserted. Sheet metal shall be stainless steel, 0.011 inch (0.28 mm) minimum thickness, ASTM A-167, Type 302 or Type 304, Number 2D finish, soft temper.

h. Clip Angles - ASTM A-36 steel, galvanized after fabrication in accordance with ASTM A-153.

i. Ferrous Casting Clamps - ASTM A 47, Grade 32510 or Grade 35018 malleable iron or cast steel, or ASTM A 27/A 27M, Grade U-60-30, cast steel casting, hot-dip galvanized in accordance with ASTM A 153/A 153M.

j. Threaded Fasteners – Provide galvanized machine bolts, washers and, when required, nuts.

1) Bolts: ASTM A-449, 3/4 inch (19 mm) diameter machine bolts with hexagon head.

2) Washers: ANSI B18.21.1, medium or heavy lock-spring washers.

3) Nuts: ASTM A-563, Grade C, heavy, hexagon-type nuts.

4) Square Nuts: ASTM A-563, Grade A, plain.

B201001 1.6 CONCRETE WALL PANEL RESTORATION

Materials, physical and chemical properties, and composition of new concrete shall match that of existing concrete to be repaired, unless samples and testing determine that existing mixtures and materials are faulty or non-performing.

B201001 1.6.1 Existing Concrete Testing

Representative samples of existing concrete shall be taken from areas of the structure to be repaired at indicated locations. The samples shall be taken in accordance with ASTM C 42 and ASTM C 823, and tested in accordance with ASTM C 39, ASTM C 42, ASTM C 295, ASTM C 457, ASTM C 856, ASTM C 1218, ASTM C 642, ASTM C 114, and ASTM C 1084. Aggregates in the existing concrete shall be evaluated in accordance with ASTM C 136 and ASTM C 295. The air content of the existing concrete shall be determined in accordance with ASTM C 457 and ASTM C 642.

B201001 1.6.2 Admixtures

Air entraining admixtures shall conform to ASTM C 260, water-reducing or -retarding admixtures shall conform to ASTM C 494, and pigments for integrally colored concrete shall conform to ASTM C 979 and ASTM C 1017. Admixtures shall not contain added chlorides.

B201001 1.6.3 Aggregates

Aggregates shall conform to ASTM C 33.

B201001 1.6.4 Cement

Cement composition shall match that of cement used in existing concrete to be repaired as determined by samples and testing and shall conform to the basic requirements of ASTM C 150 Type I or II. Cement shall have non-shrink (shrinkage compensating) properties and shall conform to ASTM C 1107 Class B or C, expansive cement type.

B201001 1.6.5 Pozzolan

Pozzolan shall conform to ASTM C 618, Class F, including limit on available alkalis, "Table 2 - Supplementary Optional Chemical Requirements," and uniformity requirements, "Table 4 - Supplementary Optional Physical Requirements."

B201001 1.6.6 Epoxy Anchor Adhesives

An epoxy-resin grout shall be used to bond steel anchors to concrete, and shall be a 100-percent solids, moisture-insensitive, low-creep, structural adhesive. The epoxy shall conform to ASTM C 881, type IV; grade and class selected to conform to the manufacturer's recommendations for the application. The epoxy adhesive shall be conditioned, proportioned, mixed, and applied in accordance with the manufacturer's recommendations, except as otherwise specified herein.

a. Epoxy-resin grout - Shall be a two-component material, 100-percent solid by weight, formulated to meet the requirements of ASTM C 881 Type I or II. Type I material shall be used when materials or atmospheric temperatures are 70 degrees F (21 degrees C) or above. Type II material shall be used when materials or atmospheric temperatures are below 70 degrees F (21 degrees C). Epoxy-resin grout shall have the ability to structurally rebond cracks, delaminations, and hollow plane conditions in concrete; shall be insensitive to the presence of water; and shall have the capability to penetrate cracks down to 5 mils in width. Materials shall have been used in similar conditions for a period of at least five years.
b. Epoxy Injection Ports - Injection ports for epoxy-resin grout shall be designed for the intended use as detailed in this section and shall be made according to the recommendation of the epoxy manufacturer.

B201001 1.7 WOOD SIDING SYSTEM

B201001 1.7.1 Horizontal Wood Siding

Horizontal Wood Siding: DOC PS 20, exterior, lap type, 6 inches wide, maximum practicable lengths, 7/16 inch (11 mm) thick, smooth face. All surfaces of wood siding and trim shall be shop coated with an alkyd primer.

a. Species and Grades

Utilize species and grades listed:

1) Grade 1 Common spruce-pine-fir; NELMA, NLGA, WCLIB, or WWPA.

2) Grade Prime or D finish, pressure-preservative-treated hem-fir; NLGA, WCLIB, or WWPA.

3) Grade D Select (Quality) eastern white pine, eastern hemlock-balsam fir-tamarack, eastern spruce, or white woods; NELMA, NLGA, WCLIB, or WWPA.

4) Grade D Select northern white cedar; NELMA or NLGA.

5) Grade B & B, pressure-preservative-treated southern pine; SPIB.

B201001 1.8 VINYL SIDING SYSTEM

Integrally colored, vinyl siding complying with ASTM D 3679. Horizontal or vertical pattern with exposure and shape shall be compatible with overall design concept. Install in accordance with manufacturer's recommendations.

B201001 1.8.1 Texture, Thickness, Finish and Color

Vinyl siding shall have wood grain texture. Minimum Nominal Thickness: 0.044 inch (1.1 mm). Minimum Profile Depth (Butt Thickness): 5/8 inch (16 mm) or 3/4 inch (19 mm). Nailing Hem shall be double-thickness. Nailing process and fasteners shall be approved by the manufacturer.

B201001 1.8.2 Accessories

Provide integrally colored, premanufactured accessories to match siding. Use accessories at terminations with other materials.

B201001 1.9 MANUFACTURED FACED PANELS SYSTEMS EXTERIOR WALL SIDING

B201001 1.9.1 Glass Fiber Reinforced Cementitious Panels System

Siding made from fiber-cement board that does not contain asbestos fibers; complies with ASTM C 1186, Type A, Grade II; is classified as noncombustible when tested according to ASTM E 136; and has a flame-spread index of 25 or less when tested according to ASTM E 84. Install in accordance with manufacturers recommendations. Panel system shall be a horizontal siding pattern in plain or beaded-edge style, unless vertical sheet panels are allowed by the RFP Part 3. Texture: Rough sawn or smooth, factory primed.

B201001 1.10 OTHER EXTERIOR WALL CLOSURE

B201001 1.10.1 Glass Block

a. Glass block units shall be made of clear colorless glass. Units to have polyvinyl butyral edge coating. Units to have 75 percent light transmission allowance. System shall utilize ventilators and accessories recommended by glass block manufacturer. Glass block specified is manufactured by Pittsburgh Corning Corporation. The manufacturer's name and catalog identification are provided to describe physical characteristics and functional requirements of the product desired. Other manufacturers' products that are considered to be the functional equivalent will be acceptable.
b. Exterior Glass Block Units shall be DECORA, VUE, or ARGUS pattern. Units designated as "reflective glass block" shall have a highly reflective oxide surface coating of a gray color.

B201001 1.10.2 Concrete Unit Masonry

Masonry walls shall comply with ACI 530.1. Load-bearing units: ASTM C90, Non-load bearing- units: ASTM C129 Type I or II. Provide ground face units, split-faced units, ground-faced units, or split-ribbed units for exposed exterior walls. Provide water repellent admixture to masonry units where the exterior face of the units will not receive a waterproof coating such as paint. Mortar shall conform to ASTM C 270, Type S. Test mortar in accordance with ASTM C 780. Provide water repellent admixture and color additive in mortar for masonry walls that will not receive a waterproof coating such as paint. Do not use admixtures containing chlorides. Provide air entrainment, not to exceed 12 percent, in mortar.

a. Adjustable Anchors for Structural Members - Use adjustable anchors to anchor masonry structural steel columns or beams. Weld the fixed portion of the anchors (steel anchor rods) to the structural steel member. Provide adjustable anchors 3/16 inch (5 mm) diameter steel wire, triangular-shaped. Anchors attached to steel shall be 5/16 inch (8 mm) diameter steel bars placed to provide 1/16 inch (1.6 mm) play between flexible anchors and structural steel members.
b. Deformed Bars - ASTM A 615/A 615M, ASTM A 616/A 616M, ASTM A 617/A 617M, or ASTM A 706/A 706M.

B201002 EXTERIOR WALL BACKUP CONSTRUCTION

B201002 1.1 CONCRETE UNIT MASONRY

Provide concrete unit masonry as described in B201001 1.10.2

Dampproofing – Dampproof the cavity-facing wythe of the backup masonry using asphaltic primer according to ASTM D 41, if dampproofing is not provided by a sprayed on foam or other DOR-approved membrane insulation system. Coordinate dampproofing materials and methods to provide vapor transmission control for the lifetime of the structure. Repair any dampproofing damaged by other construction operations.

B201002 1.2 LOAD-BEARING METAL FRAMING SYSTEM

Exterior Studs:

Maximum Deflection Criteria / Exterior Finish

L/360 / Cement Plaster, Wood Veneer, Synthetic Plaster, Metal Panels
L/600 / Brick Veneer, Stone Panels

Wall deflections shall be computed on the basis that studs withstand all lateral forces independent of any composite action from sheathing materials. Studs abutting windows or louvers shall also be designed not to exceed 1/4-inch maximum deflection and as required in UFC 4-010-01.

a. Studs - ASTM A 1003/ASTM A 1003M, Structural Grade 50, Type H minimum; provide Z180 (G60) galvanized coating in accordance with ASTM A 653/ASTM A 653M. Do not expose studs to direct moisture contact. Studs shall be stamped with manufacturer's name, initials, or logo, an ICBO number, material thickness and yield strength. Size and gage shall be as required to meet the loading requirements specified.

b. Bracing - Provide horizontal bracing in accordance with design calculations and AISI SG-673, consisting of, as a minimum, runner channel cut to fit between and welded to the studs or hot- or cold-rolled steel channels inserted through cutouts in the web of each stud and secured to studs with welded clip angles. Provide bracing, as a minimum, at 5 feet (1.52 meters) o.c. for wind load only, and 3"-4"(1.0 meters) o.c. for axial loads.

c. Sheathing - Provide sheathing to withstand structural loads imposed on the wall structure. Cover sheathing with either a 15 pound asphalt-impregnated building paper, or air barrier as required by the wall moisture analysis. Sheathing shall be one of the following:

1) Plywood: C-D Grade, Exposure 1, with an Identification Index of not less than 24/0.

2) Structural-Use and OSB Panels: Sheathing grade with durability equivalent to Exposure 1, Span Rating of 24/0 or greater.

3) Gypsum: ASTM C 79/C 79M and ASTM C 1177/C 1177M, 1/2 inch (13 mm) thick fire retardant (Type X) 5/8 inch (15 mm) thick; 4 feet (1.2 meters) wide with square edge for supports 16 inches (400 mm) o.c. with or without corner bracing of framing. Gypsum sheathing shall be faced with materials capable of resisting six months of weathering exposure without degradation of the covering or the gypsum. Seal all joints as recommended by the manufacturer.

B201002 1.3 WOOD FRAMING SYSTEM

All materials shall be kiln-dried lumber complying with DOC PS 20. Installation shall be in accordance with AF & PA T11. System shall use preservative pressure treated lumber at sill plates and other members in contact with concrete and masonry surfaces.

a. Species and Grades - Provide species and grades listed:

1) Grade 2 Common spruce-pine-fir; NELMA, NLGA, WCLIB, or WWPA.
2) Grade 2 Common, hem-fir; Douglas-fir; NLGA, WCLIB, or WWPA.
3) Grade 2 Common, southern pine; SPIB.

b. Sheathing - Sheathing shall withstand structural loads imposed on the wall structure. Cover sheathing with either a 15 pound asphalt-impregnated building paper, or air barrier as required by the wall moisture analysis. Sheathing shall be one of the following:

1) Plywood: C-D Grade, Exposure 1, with an Identification Index of not less than 24/0.

2) Structural-Use and OSB Panels: Sheathing grade with durability equivalent to Exposure 1, Span Rating of 24/0 or greater.

3) Gypsum: ASTM D 3273 for mold resistance, ASTM C 1177, fire retardant (Type X) 5/8 inch (15 mm) thick; 4 feet (1.2 meters) wide with square edge for supports 16 inches (400 mm) o.c. with or without corner bracing of framing. Gypsum sheathing shall be faced with material capable of resisting six months of weathering exposure without degradation or the covering or the gypsum. Seal all joints as recommended by the manufacturer.

B201002 1.4 CAST-IN-PLACE CONCRETE SYSTEM

a. Unless otherwise noted herein, all concrete design and construction must be in accordance with UFC 1-200-01.

b. Concrete construction must be in accordance with ACI 301.
c. Refer to Performance Verification Testing for Cast-in-place field quality control.
d. Concrete construction tolerances must be in accordance with ACI 117.
e. Design for watertight joints, or weeping joints having back-up water penetration protection in precast elements. Cracking potential of precast concrete elements shall be minimized by implementing expansion and control joints in the precast assembly.
f. Joints shall include properly sized and placed backing material and fully loaded and tooled sealant joint of no less than 1/4 inch sealant material thickness.

B201003 INSULATION & VAPOR RETARDER

Insulation, Vapor Retarders, and Air Barrier Systems in or on Exterior Enclosure shall include: insulation, liquid, sheet or continuous film materials installed separately in or on wall assemblies to provide resistance to heat loss/gain, and vapor penetration.

B201003 1.1 VAPOR RETARDER

Comply with ASTM C755. Incorporate in the exterior wall system where required by vapor transmission calculations or dew point analysis indicates the need or in conditions of high moisture exposure.

B201003 1.1.1 Bituminous Dampproofing

Bituminous Dampproofing shall be ASTM D449, Type I or Type II bituminous dampproofing on the exterior surface of the interior Wythe of masonry in a cavity wall (back-up wall for masonry veneer).

B201003 1.1.2 Building Paper

FS UU-B-790, Type I, Grade D, Style 1. Where required, provide over sheathing on wood or metal framed wall construction to eliminate water penetration.

B201003 1.1.3 Polyethylene sheeting

Sheeting shall meet ASTM 4397, minimum 6-mils thickness. Provide typically on the interior face of insulated, wood, or metal stud wall construction, unless a moisture vapor analysis indicates otherwise. (Poly sheeting on the interior surface of the studs is not recommended for cold, mixed-humid, mixed-dry, hot-humid or hot-dry climates.)

B201003 1.2 AIR BARRIER

Provide continuous air barrier. Seal all holes and seams in the air barrier. If the air barrier is combined with water drainage barrier on portions of the building, seal the seam between the two systems.

Residential construction air barriers shall consist of sheeting complying with ASTM E 1677, Type 1, not less than 3 mils thick with a permeance of not less than 10 perms (575 ng/Pa x s x sq. m.). Building wrap shall have a flame spread index of less than 25 in accordance with ASTM E 84. Provide building wrap over sheathing of wood or metal framed construction to reduce air penetration and airborne vapor penetration. Provide building wrap tape as recommended by the manufacturer for sealing all joints in the building wrap. Installation shall be in accordance with manufacturer's instructions. Air barrier installation at windows shall be in accordance with ASTM E 2112.

Provide minimum 40 mil DFT elastomeric spray or 36 mils elastomeric sheet barrier when air barriers are used as water barriers.

B201003 1.3 INSULATION SYSTEMS

Vertical and horizontal polystyrene insulation conforming to ASTM C578 or rigid polyisocyanurate board wall insulating products conforming to ASTM C591 or mineral-fiber blanket insulation conforming to ASTM C 665 shall be provided. Wall insulating product shall have a minimum R-value to meet the code and the energy design of the facility. Seal the joints in rigid insulation within cavity/veneer walls for additional moisture and air infiltration protection.

B201004 PARAPETS

Avoid parapets when possible, but when necessary, provide parapets with the same materials as the exterior wall construction, including framing members, anchors, flashings, cants, and accessories. Parapets shall be designed to withstand the lateral loads prevailing at the project site and be provided with through-wall flashing below the parapet cap, at structural members, at penetrations, and at the roof level. Provide flashing and scuppers in accordance with SMACNA.

B201005 EXTERIOR LOUVERS & SCREENS

If required, provide louvers, which are not an integral part of the mechanical equipment, exterior closures, grilles and screens, storm shutters, and other materials used for a variety of purposes including screening of equipment or as louvers for exterior doors.

Louvers, screens, grilles in shall be selected in a color and design that is compatible with the fabric of the exterior architectural character as described below. For frame construction, install in accordance with ASTM E 2112.

B201005 1.1 WALL LOUVERS

Wall louvers shall be drainable blade type louver with blade slopes of 45 degrees minimum, but provide wind driven rain rated louvers for wall louvered rooms without a floor drain within the room. Louvers shall be made to withstand a wind load of not less than 30 psf (146 Kg/m2), .08 inch (2 mm) thick 6063-T5 or T52 extruded aluminum in a factory-finished color in accordance with AAMA 2605 with a minimum coating thickness of 1.2 mil to match the building facade. Wall louvers shall bear the AMCA certified ratings program seal for air performance and water penetration in accordance with AMCA 500 , 500L (wind driven rain), and AMCA 511. Provide sill flashing with sloped drain pan at base of louver to collect moisture that migrates down the interior face of the louver. This sill flashing shall drain water to the outside of the building. Louvers shall have bird screens.

B201005 1.2 SCREENED EQUIPMENT ENCLOSURE

Design and fabricate support frames to withstand wind loads. Anchor frames securely in place. Provide secondary horizontal steel or aluminum framing for attachment of screen materials. Screen material shall be factory finished coating in accordance with AAMA 2605 with a minimum coating thickness of 1.2 mils. Form metal panels from galvanized steel sheet per ASTM A-653 or aluminum sheet per ASTM B 209.

B201005 1.3 STORM SHUTTERS

B201005 1.3.1 Roll Shutters

Roll shutters shall have factory finished 0.050 inch (1.27 mm), 6063-T5/T6 aluminum slats with continuous over-head housing, frame, and tracks. Roll shutter shall be capable of being locked in a closed position by a non-key device.

B201005 1.3.2 Accordion Shutters

Accordion shutters shall have factory-finished aluminum alloy 6063-T5/T6 slats and tracks. Accordion shutter shall have stainless steel wheel carriers, nylon wheels, and guides with stainless steel fasteners and be capable of being locked in a closed position by a non-key device.

B201005 1.3.3 Hinged Louvered Shutters

Hinged louvered shutters shall have factory finished 0.50 inch (13 mm), 6063-T5/T6 aluminum louvered blades, and frames with stainless steel hinges, holders, and fasteners. Allow minimum space between horizontal louver blades. Provide storm bar where required due to the lateral loads imposed on the shutter.

B201005 1.3.4 Removable Shutters

Removable shutters shall have formed factory finished 0.050 inch (1.27 mm), 3003-H16 aluminum panels and continuous 6063-T5/T6 header and base frame with stainless steel fasteners or spring tempered stainless steel clips.

B201005 1.3.5 Exterior Door Louvers

If allowed by UFC 4-010-01, louvers for exterior doors shall be inverted "Y" type with minimum of 30 percent net-free opening. Weld or tenon louver blades to continuous channel frame and weld assembly to door to form watertight assembly. Form louvers of hot-dip galvanized steel of same gage as door facings. Louvers shall have steel-framed insect screens secured to room side and readily removable. Louvers shall have aluminum wire cloth, 18 by 18, or 18 by 16 inch mesh, for insect screens. Net-free louver area shall be before screening.

B201006 BALCONY WALLS & HANDRAILS

B201006 1.1 PRECAST CONCRETE BALCONY WALLS

Precast concrete balcony walls shall be in accordance with section B201001 EXTERIOR CLOSURE paragraph titled, "Precast Concrete Wall Panels."

B201006 1.2 UNIT MASONRY BALCONY WALLS

B201006 1.2.1 Clay Masonry Units

Clay masonry balcony walls shall be in accordance with section B201001 EXTERIOR CLOSURE, paragraph titled, "Face Brick."

B201006 1.2.2 Concrete Masonry Units

Concrete masonry balcony walls shall be in accordance with section B201001 EXTERIOR CLOSURE, paragraph titled, "Unit Masonry."

B201006 1.3 METAL FRAMED ASSEMBLY BALCONY WALLS

Metal framed assembly balcony walls shall be in accordance with section B201001 EXTERIOR CLOSURE, paragraph titled, "Load Bearing Metal Framing System."

B201006 1.4 WOOD FRAMED ASSEMBLY BALCONY

Wood framed assembly balcony walls shall be in accordance with section B201001 EXTERIOR CLOSURE, paragraph titled, "Wood Framing System."

B201006 1.5 HANDRAILS

Design handrails and anchorage connections to resist loads in accordance with IBC. Provide materials in accordance with NAAMM PR, with the same size handrail and vertical post. Provide series 300 stainless steel pipe collars. Factory coat all metal railings, except ornamental metals such as brass, bronze, and nickel-silver, with a high performance coating in accordance with AAMA 2605 with a minimum coating thickness of 1.2 mils unless otherwise noted.

B201006 1.5.1 Steel Handrails

Steel handrails, including inserts in concrete, steel pipe conforming to ASTM A-53 or structural tubing conforming to ASTM A-500, Grade A or B of equivalent strength shall be provided. Steel railings shall be of 1 1/2 inches (38 mm) nominal size. Railings shall be hot-dip galvanized, shop primed shop painted for exterior applications.

B201006 1.5.2 Aluminum Handrails

Aluminum railing shall be of 1-1/2 inch (38 mm) nominal schedule 40 pipe conforming to ASTM B 429 or 1-3/4 inch (44 mm) square aluminum semi-hollow tube with rounded corners conforming to ASTM B 221. Railings shall be coated with a high performance coating or anodized in accordance with AAMA 611, Class I. All fasteners shall be Series 300 stainless steel.

B201006 1.5.3 Wood Handrails

Wood handrails shall be of pre-finished natural hardwood in oak, walnut, or ash. Wood shall be coated with hard acrylic finish to withstand indentations.

B201007 EXTERIOR SOFFITS

Exterior soffit system assemblies shall include trim and necessary accessories including high performance coatings, if required. Installation shall be crisp, fit, and trim with tight joinery to back-up framing. Soffits shall be designed to be field assembled by lapping side edges of adjacent panels and mechanically attaching through panels to galvanized, non-load bearing framing conforming to ASTM A-653 (G60) and ASTM C 645, using concealed fasteners. Provide trim accessories of the same material and finish as the soffit material where soffit abuts other materials.

Use adequate backing material to assure snug joints and even face planes. Where soffits ventilate an attic space, or an otherwise unventilated space, provide a soffit/ridge/louver/ventilator ventilation system with air quantities complying with the IBC. For spaces intentionally not vented, provide sealed soffits to maintain the integrity of the air barrier and insulating envelope.

B201007 1.1 METAL SOFFIT PANELS

Metal soffit panels shall be factory-formed and factory-finished. Use factory-applied sealant in side laps.

B201007 1.2 VINYL SOFFIT SYSTEM

If required, provide integrally colored vinyl soffit complying with ASTM D 4477.

B201007 1.3 EXTERIOR GYPSUM BOARD SYSTEM

Exterior gypsum wall board soffit system shall be tapered edge 5/8 inch (16 mm) thick, 48 inch (1.2 meter) wide exterior gypsum board panels conforming to ASTM C 931 and ASTM C 840, mechanically attached to galvanized non-load bearing framing conforming to ASTM A 653, G60 and ASTM C 754. Tape and finish gypsum board joints in accordance with ASTM C840. Soffit design shall assure that the gypsum soffit material does not have direct water contact.

B201008 WALL FLASHING

Flashing shall be aluminum or stainless steel or copper. Aluminum shall conform to ASTM B 209/B 209M, 0.040 inches (1.27 mm) thick and shall be coated to match the item flashed. Stainless steel shall conform to ASTM A-167, type 302 or 304, 2D finish, fully annealed, dead soft temper. Thickness shall be a minimum of 0.018 inches (0.4572 mm). Copper shall conform to ASTM B 370, cold rolled temper. Thickness of copper shall be 20 ounces per square foot (6.125 Kg/m2).

B201009 EXTERIOR PAINTING AND SPECIAL COATINGS

B201009 1.1 GENERAL REQUIREMENTS

Painting practices shall comply with applicable federal, state, and local laws enacted to insure compliance with Federal Clean Air Standards. Apply coating materials in accordance with SSPC PA 1. SSPC PA 1 methods are applicable to all substrates.

All paint shall be in accordance with the Master Painter Institute (MPI) standards for the exterior architectural surface being finished. The current MPI, "Approved Product List" which lists paint by brand, label, product name and product code as of the date of contract award, will be used to determine compliance with the submittal requirements of this specification. The Contractor may choose to use a more current MPI "Approved Product List"; however, only one list may be used for the entire contract. All coats on a particular substrate, or a paint system, must be from a single manufacturer. No variation from the MPI Approved Products List is acceptable.

MPI paint systems identified in the RFP take precedence over other MPI systems listed in the MPI literature. If the RFP does not identify a paint system applicable to all painting of the facility, utilize MPI tested systems listed in the MPI *Architectural Painting, Exterior System* manual to identify appropriate paint coatings. Utilize the "Detailed Performance Premium Grade" systems and comply with all limitations stated in the MPI "Approved Products List" for each system.

Remove dirt, splinters, loose particles, grease, oil, and other foreign matter and substances deleterious to coating performance as specified for each substrate before application of paint or surface treatments. For existing buildings, use MPI *Maintenance Repainting Manual* to determine the coatings that need to be removed. Remove deteriorated or loose coatings before repainting begins. Oil and grease shall be removed prior to mechanical cleaning. Cleaning shall be programmed so that dust and other contaminants will not fall on wet, newly painted surfaces. Exposed ferrous metals such as nail heads on or in contact with surfaces to be painted with water-thinned paints, shall be spot-primed with a suitable corrosion-inhibitive primer capable of preventing flash rusting and compatible with the coating specified for the adjacent areas.

B201009 1.1.1 MPI Gloss Levels

Gloss levels shall comply with the MPI system of determining gloss as defined in the Evaluation sections of the MPI Manuals. Utilize the performance characteristics of the paint gloss and sheen to categorize paint rather than manufacturers' description of the product.

The MPI gloss Levels are indicated by the notation G1, G2, G3, G4, G5, G6, or G7. Use G2 "Velvet-like" flat for vertical surfaces and undersides of balconies and soffits. Use G3 "Eggshell-like" in high "traffic areas for ceilings and walls, when a surface can be touched and a slightly more durable finish is desired, and for dark accent colors. Use G5 Semigloss for ceilings, walls, doors and trim for high durability and cleanability. Use G6 Gloss only in special situations such as for exterior wood and metal, piping identification, or special effects. The MPI gloss and sheen standard values are per ASTM D523, method D and are as follows:

Gloss Level Number	Gloss @ 60 Degrees	Sheen @ 85 Degrees
Gloss Level 1(G1)-Matte or Flat	Max 5 units	Max 10 units
Gloss Level 2(G2)-"Velvet-like" Flat	Max 10 units	10-35 units
Gloss Level 3(G3)-"Eggshell-like"	Max 10-25 units	10-35 units
Gloss Level 4(G4)-"Satin-like	Max 20-35 units	Min 35 units
Gloss Level 5(G5)-Semi-Gloss	35-70 units	
Gloss Level 6(G6)-Gloss	70-85 units	
Gloss Level 7(G7)-High Gloss	More than 85 units	

B201009 1.1.2 MPI System Designations and Table Abbreviations

The MPI coating system number description is found in either the *MPI Architectural Painting Specification Manual* or the *Maintenance Repainting Manua l*and defined as an exterior system

a. EXT - MPI short-term designation for an exterior coating system on a new surface.

b. REX - the MPI short term designation for an exterior coating system used in repainting projects or over existing coating systems.
c. DSD - the MPI short-term designation for Degree of Surface Degradation as defined in the Assessment sections in the *MPI Maintenance Repainting Manual*. Degree of Surface Degradation designates the MPI Standard for description and appearance of existing condition of surfaces to be painted. This DSD classification is used to determine the proper surface preparation necessary for painting.
d. DFT – The short-term designation for dry film thickness. DFT is the minimum acceptable depth or thickness of a coating or system in the dry state. The maximum acceptable DFT is not more than 50% greater than the minimum acceptable DFT (example: DFT = 2 mils, maximum DFT = 3 mils). The DFT indicated in the paint systems below relate to new coatings - MPI INT. MPI RIN will be less than the indicated DFT.
e. Paint Systems Abbreviations: BF – block filler; C – clear coat; SP – spot primer; P – primer coat; I – intermediate coat; T – topcoat.

B201009 1.1.3 Surface Preparation

Comply with the "Exterior Surface Preparation" section of the *MPI Architectural Painting Specification Manual* or the Exterior Surface Preparation" section of the *MPI Maintenance Repainting Manual*. All suggestive language such as "may" or "should" are deleted from the standard and "must" or "shall" inserted in its place. Suggestive language such as "recommended" or "advisable" is deleted from the standard and "require" or "required" inserted in its place. The results of these wording substitutions change this document to required procedures. For surface preparation, determine a MPI DSD Assessment of each surface and comply with the MPI Surface Preparation Requirements relating to the assessments.

B201009 1.2 EXTERIOR CONCRETE FINISHES

New and Existing, previously painted concrete, vertical surfaces, undersides of balconies and soffits, but excluding tops of slabs:

a. Latex, System DFT: 3.5 mils

1) MPI EXT 3.1K/ REX 3.1L-G2 (Flat)/; P: MPI 3, I: MPI 10, T: MPI 10

2) MPI EXT 3.1K/ REX 3.1L-G3/G4 (Low sheen); P: MPI 3, I: MPI 15, T: MPI 15

New and Existing, previously painted concrete floors, patios, and walkways with low contact and traffic. Not for high abuse, wheel traffic, or high humid area applications:

a. Latex, System DFT: 3.5 mils

1) MPI EXT/ REX 3.2A-G2/G3 (Low gloss); P: MPI 60, I: MPI 60, T: MPI 60

B201009 1.3 EXTERIOR CONCRETE MASONRY FINISHES

New and Existing, previously painted concrete masonry:

a. Latex, System DFT: 11 mils

1) MPI EXT/REX 4.2A-G2 (Flat); BF: MPI 4, P: MPI 10, I: MPI 10, T: MPI 10

2) MPI EXT 4.2A-G3/G4 (Low sheen) / REX 4.2-G5; BF: MPI 4, P: MPI 15, I: MPI 15, T: MPI 15

B201009 1.4 EXTERIOR METAL FINISHES

B201009 1.4.1 New Steel that has been hand or power tool cleaned to SSPC SP 2 or SP 3:

a. Alkyd, System DFT: 5.25 mils

1) MPI EXT 5.1Q-G5 (Semigloss)/REX 5.1D-G5; P: MPI 23, I: MPI 94, T: MPI 94

B201009 1.4.2 New Steel that has been blast cleaned to SSPC SP 6:

a. Alkyd, System DFT: 5.25 mils

1) MPI EXT/ REX 5.1D-G5 (Semigloss); P: MPI 79, I: MPI 94, T: MPI 94

B201009 1.4.3 New and existing steel that has been blast cleaned to SSPC SP 10:

a. Waterborne Light Industrial, System DFT: 8.5 mils

1) MPI EXT 5.1R-G5 (Semigloss); P: MPI 101, I: MPI 108, T: MPI 163

B201009 1.4.4 New Galvanized surfaces:

a. Epoxy P/Waterborne Light Industrial, System DFT: 4.5 mils

1) MPI EXT 5.3K-G5 (Semigloss); C: MPI 25, P: MPI 101, I: MPI 161, T: MPI 161

B201009 1.4.5 Galvanized surfaces with slight coating deterioration, with little or no rusting:

a. Epoxy P/Waterborne Light Industrial Coating, System DFT: 4.5 mils

1) MPI EXT 5.3K-G5 (Semigloss); C: MPI 25, P: MPI 101, I: N/A, T: MPI 163

B201009 1.4.6 Galvanized surfaces with severely deteriorated coating or rusting:

a. Epoxy P/Waterborne Light Industrial Coating, System DFT: 8.5 mils

1) MPI EXT 5.3K-G5 (Semigloss); C: MPI 25, P: MPI 101, I: MPI 163, T: MPI 163

B201009 1.5 EXTERIOR WOOD FINISHES

B201009 1.5.1 New and existing uncoated, dressed lumber or plywood, including backprime, top, bottom, and edges of doors not specified otherwise:

a. Alkyd, System DFT: 5 mils

1) MPI EXT 6.3B-G5 (Semigloss); P: MPI 7, I: MPI 94, T: MPI 94

b. Latex, System DFT: 5 mils (Not for human or abrasive contact areas)

1) MPI EXT 6.3A-G5 (Semigloss); P: MPI 7, I: MPI 11, T: MPI 11

B201009 1.5.2 Existing dressed lumber or plywood, including top, bottom, and edges of doors previously coated with an alkyd / oil based finish:

a. Alkyd, System DFT: 5 mils

1) MPI REX 6.3B-G5 (Semigloss); P: MPI 5, I: MPI 94, T: MPI 94

b. Latex, System DFT: 5 mils (Not for human or abrasive contact areas)

1) MPI REX 6.3A-G5 (Semigloss); P: MPI 5, I: MPI 11, T: MPI 11

B201009 1.5.3 Existing dressed lumber or plywood, including top, bottom, and edges of doors previously coated with a latex / waterborne finish:

a. Latex, System DFT: 4.5 mils

1) MPI REX 6.3L-G5 (Semigloss); P: MPI 6, I: MPI 11, T: MPI 11

B201009 1.5.4 New and existing dressed lumber or plywood, including stairs and decks:

a. Latex, System DFT: 4.5 mils (not for use in high traffic areas)

1) MPI REX 6.5A-G5/G6 (Low Gloss); P: MPI 5, I: MPI 60, T: MPI 60

B201009 1.6 EXTERIOR STUCCO FINISHES

B201009 1.6.1 New and existing stucco or plaster:

a. Latex, System DFT: 4.5 mils

1) MPI EXT/REX 9.1J-G3/G4 (Low sheen); P: MPI 3, I: MPI 15, T: MPI 15

2) MPI EXT/REX 9.1J-G5 (Semigloss); P: MPI 3, I: MPI 11, T: MPI 11

B201010 EXTERIOR JOINT SEALANT

Sealant joint design, priming, tooling, masking, cleaning and application shall be in accordance with the general requirements of *"Sealants: A Professional's Guide"* from the Sealant, Waterproofing & Restoration Institute (SWRI). All sealant shall conform to ASTM C 920.

Joints shall include proper backing material for sealant support during application, control of sealant depth, and to act as a bond breaker. Use filler boards, backer rods and bond breaker tapes. Provide priming unless specifically not recommended by the sealant manufacturer. Applied sealant shall be tooled. Tooling shall not compact sealant too less than the minimum sealant thickness required. Mask adjacent surfaces to control sealant boundaries during sealant application.

B201011 SUN CONTROL DEVICES (EXTERIOR)

Sun control devices shall be manufactured devices to provide sun control on exterior windows and storefronts. Sun control devices shall be designed and installed to withstand the wind loads prevailing at the project site.

B201011 1.1 EXTERIOR SUN SCREENS

Exterior sun screens shall be of aluminum with 6063-T5/T6 aluminum demountable frame attachment. Screen material shall be formed factory finished metal from aluminum sheet per ASTM B 209. Screen material shall be factory finished coating in accordance with AAMA 2605 with a minimum coating thickness of 1.2 mils. Sunscreen shall be awning, fin, or other type appropriate to the installation.

B201012 SCREEN WALL

Screen walls include attached or unattached walls adjacent to the main building. Screen walls shall conform to the applicable portions of Section B201001 EXTERIOR CLOSURE.

B201090 OTHER EXTERIOR WALLS

B2020 EXTERIOR WINDOWS

Standard windows shall be in compliance with ANSI/AAMA/WDMA 101, SWI SWS, UFC 4-010-01, and the design criteria of ASCE 7 for glazed windows to meet the Building Code.

If required, provide windows that meet the requirements of AAMA/WDMA 101/I.S.2. Residential construction shall utilize windows that comply with AAMA LC-25 designation unless the wind pressure on the building exceeds 38 psf (185 Kg/m2). Commercial (non-residential) construction shall utilize windows that comply with AAMA designation HC-40 (60 psf - 293 Kg/m2) for windows that do not have to meet anti-terrorism requirements, and HC-60 (90 psf - 439 Kg/m2) for commercial windows that are required to meet anti-terrorism requirements, unless the wind pressure or blast pressure on the building exceeds the design pressure for these minimum windows. Determine the wind pressure on the building by converting the ASCE-7 basic wind speed to wind pressure and find the corresponding structural test pressure in the AAMA specific requirements or optional performance tables. If the residential window wind pressure exceeds of 38 psf (185 Kg/m2) or the commercial (non-residential) window wind pressure exceeds 60 psf (293 Kg/m2) or exceeds 90 psf (439 Kg/m2), utilize a higher AAMA designated window complying with the calculated wind pressure. Anti- Terrorism window systems (including connections) shall meet the testing requirements of UFC 4-010-01 when tested in accordance with ASTM F1642.

Comply with ASTM E 2112 and with flashing and weather-resistive barrier manufacturers' recommendations to install windows in framed wall construction. Comply with window flashing details from BIA for masonry back-up and veneer walls. Engineer and install window cleaning access and anchorage to the exterior wall for facilities over three stories tall without interior window cleaning access from pivoting or tilting sash.

Provide anchors in accordance with OSHA standard 29 CFR Section 1910.66.

Windows shall be provided with sills on the exterior and stools on the interior of the opening. Sills shall be special shape or cut unit masonry or precast concrete in masonry exterior construction and extruded aluminum or aluminum-wrapped wood framing or formed metal in other construction. Positively slope sills away from windows. Window stools shall be slate or solid polymer for commercial construction and painted wood for residential construction.

B202001 WINDOWS

Exterior windows shall consist of fixed and operable sash used singly and in multiples. Provide operable sash in spaces occupied by people as a minimum. Include operating hardware; non-corroding framed metal screens for operable sash, integrated blinds set between glass panels, and security grilles. Provide jamb support for larger windows where recommended by manufacturer. Metal windows with insulating glass shall have thermally broken frames and sash.

Provide glazing in exterior windows in accordance with section B202004 EXTERIOR GLAZING.

B202001 1.1 STANDARD WINDOW SYSTEMS

B202001 1.1.1 Steel Windows

Conform to SWI SWS. Solid hot-rolled steel shape welded frames and mullions. Provide chemically cleaned and primed galvanized frames with polysteel powder coat finish. Provide glazing beads, steel frame screens with aluminum mesh at operable sashes, hardware and locks, and tinted glazing. Aluminum screens shall comply with ANSI/SMA 1004.

B202001 1.1.2 Aluminum Windows

Conform to ANSI/AAMA/WDMA 101. Factory-finish aluminum windows and provide with aluminum frame screens with aluminum mesh at operable sash, hardware and locks, and tinted glazing. Aluminum screens shall comply with ANSI/SMA 1004.

Exposed aluminum surfaces shall be factory finished with an AA 45 anodic coating or an AAMA organic coating. Provide a minimum of architectural Class II anodized coating or a baked enamel finish conforming to AAMA 2604 for residential construction. Provide a minimum of architectural Class I anodized coating or a high-performance organic coating conforming to AAMA 2605 for non-residential (commercial) construction. AAMA coatings shall have a total dry film thickness of 1.2 mils.

B202001 1.1.3 Security Windows

Security windows delay forced entry into the building through the windows. In addition to meeting the requirements of AAMA 101, windows designated "resistance to forced entry" shall conform to the requirements of AAMA 1302.

B202001 1.1.4 Plastic Windows, Factory Finish

Provide integral colored or co-extruded color PVC, welded and reinforced corners, reinforcing members, fasteners, hardware, weatherstripping, welded sill, and anchors conforming to ANSI/AAMA/WDMA 101 or ASTM D 4099. The exterior grade polyvinyl chloride extrusion shall comply with AAMA 303 and ASTM 4726.

B202001 1.1.5 Wood Windows

Wood windows shall consist of complete units including sash, glass, frame, weatherstripping, insect screen, and hardware. Window units shall meet the requirements of AAMA 101, except maximum air infiltration shall not exceed 0.30 CFM per linear foot of sash crack when tested under uniform static air pressure difference of 1.57 psf (7.66 Kg/m2). Glass and glazing materials shall conform to section B202004, EXTERIOR GLAZING. Insect screen shall meet ASTM D 3656, Class 2, 18 by 14 mesh, and color charcoal. Aluminum screen frames shall meet SMA 1004.

a. Finish

1) Vinyl (PVC) Cladding: Preservative treat all basic wood frame and sash members in accordance with WDMA I.S.4, except do not use pentachlorophenol. Clad all exterior surfaces with rigid polyvinyl sheathing, complying with ASTM D 1784, class 14344-C, not less than 35 mils average thickness.

2) Aluminum Cladding: Preservative treat all basic wood frame and sash members in accordance with WDMA I.S.4, except do not use pentachlorophenol. Clad all exterior surfaces with roll formed aluminum with joints sealed during assembly. Aluminum clad frames and sash shall meet performance requirements of AAMA 101. Aluminum finish shall be an organic coating of an AAMA 2604 coating for residential construction and AAMA 2605 for non-residential (commercial) construction with a minimum dry film thickness of 1.2 mils.

B202002 STOREFRONTS

Provide one-story storefront system fabricated from formed and extruded aluminum and glass components for exterior use.

B202002 1.1 ALUMINUM-FRAMED STOREFRONTS

B202002 1.1.1 Performance Requirements

a. Structural Requirements, as measured in accordance with ANSI/ASTM E330: Wind loads for exterior assemblies shall meet or exceed 25 psf (122 Kg/m2) acting inward and 25 psf (122 Kg/m2) acting outward. Design system to withstand this as a minimum and comply with design pressure established within the required ASCE 7-05 Wind Speed Calculations determined by the overall average opening within the project.

b. Deflection: Maximum calculated deflection of any framing member in direction normal to plane of wall when subjected to specified design pressures for spans up to and including 13’-6" shall be limited to 1/175 of its clear span and for spans greater than 13’-6" deflection shall be limited to 1/240 + 1/4" of its clear span, except that maximum deflection of members supporting plaster surfaces shall not exceed 1/360 of its span.

c. Air Infiltration - Air leakage through fixed light areas of storefront shall not exceed 0.06 cfm per square foot of surface area when tested in accordance with ASTM E283 at differential static pressure of 6.24 psf (33.84 Kg/m2).

d. Water Penetration - When tested in accordance with ASTM E 331, there shall be no water penetration at a pressure of 15 psf (73 Kg/m2) of fixed area.

e. Water infiltration - No uncontrolled leakage when tested in accordance with ASTM E331 at test pressure of 10 psf (48 Kg/m2) for system standard and capable of performing within the Design Pressure requirements derived from the ASCE 7-05 requirements.

B202002 1.1.2 Doors And Frames

Provide doors complete with frames, framing members, subframes, transoms, adjoining sidelights, adjoining window wall, trim, and accessories, as required for a complete installation. Anchors shall be stainless steel. Weatherstripping shall be Continuous wool pile, silicone treated, or type recommended by door manufacturer. See B203008, EXTERIOR DOOR HARDWARE for hardware requirements.

B202002 1.1.3 Aluminum Alloy for Doors and Frames

ASTM B 221, Alloy 6063-T6 for extrusions; ASTM B 209, alloy and temper best suited for aluminum sheets and strips.

B202002 1.1.4 Fabrication

a. Aluminum Frames: Provide removable glass stops and glazing beads for frames accommodating fixed glass. Use countersunk stainless steel Phillips screws for exposed fastenings, and space not more than 12 inches (300 mm) o.c. Mill joints in frame members to a hairline fit, reinforce, and secure mechanically.
b. Aluminum Doors: Doors shall be medium or wide stile. Doors shall be not less than 1-3/4 inches (44 mm) thick. Minimum wall thickness, 0.125 inch (3.175 mm), except beads and trim, 0.050 inch (1.27 mm). Bevel single-acting doors at lock, hinge, and meeting stile edges. Double-acting doors shall have rounded edges at hinge stile, lock stile, and meeting stile edges.
c. Finishes: Provide exposed aluminum surfaces with factory finish of anodic coating conforming to AA45, Architectural Class I or an organic coating conforming to AAMA 2605 with a total dry film thickness of not less than 1.2 mils.

B202003 CURTAIN WALLS

B202003 1.1 GLAZED CURTAIN WALL SYSTEM REQUIREMENTS

Provide system complete with framing, mullions, trim, panels, windows, glass, glazing, sealants, insulation, fasteners, anchors, accessories, concealed auxiliary members, and attachment devices for securing the wall to the structure as specified.

Fully coordinate system accessories directly incorporated and adjacent to related work and insure materials compatibility, deflection limitations, thermal movements, and clearances and tolerances as specified. Design and test in accordance with *AAMA Curtain Wall Manual*.

B202003 1.1.1 Source

Curtain wall system components shall be furnished by one manufacturer or fabricator; however, all components need not be products of the same manufacturer.

B202003 1.1.2 Cleaning Provisions

For curtain wall systems over two stories in height reinforce curtain wall members and provide support for cleaning rigs. The support for cleaning rigs may be provided by other elements of the facility.

B202003 1.1.3 Warranty

a. System Warranty – Manufacturer of the curtain wall system shall be warrant that the design, construction, and materials installed in the system shall be free of manufacturer's defects for the life of the installation. The manufacturer shall provide a similar warranty for the individual components of the system that are provided by other, outside manufacturers. Execute the warranty for the system directly to the Government.
b. Additional Glass Warranty – Insulating glass units shall be guaranteed not to develop material obstruction of vision as a result of dust or film formation on the inner glass surface caused by failure of the seal, other than through glass breakage, within a period of 5 years from date of acceptance of work by the Government. Units failing to comply with the terms of this guarantee shall be replaced with new units without additional cost to the Government. The Contractor shall require the manufacturer to execute their warranties in writing directly to the Government.

B202003 1.1.4 Design

a. Structural Requirements, as measured in accordance with ANSI/ASTM E330:

1) Wind loads for exterior assemblies: Provide systems capable of performing at a minimum C acting inward and 25 psf (122 Kg/m2) acting outward. Design system to withstand this as a minimum and comply with design pressure established within the required ASCE 7-05 Wind Speed Calculations determined by the overall average opening within the project.

2) Deflection: Maximum calculated deflection of any framing member in direction normal to plane of wall when subjected to specified design pressures for spans up to and including 13'-6" shall be limited to 1/175 of its clear span and for spans greater than 13'-6" deflection shall be limited to 1/240 + 1/4" of its clear span, except that maximum deflection of members supporting plaster surfaces shall not exceed 1/360 of its span.

3) Water Penetration/Water infiltration - No uncontrolled leakage when tested in accordance with ASTM E331 at test pressure of 10 psf (48.6 Kg/m2) for system standard and capable of performing within the Design Pressure requirements derived from the ASCE 7-05 requirements.

4) Air Infiltration - Air leakage through fixed light areas of storefront shall not exceed 0.06 cfm per square foot of surface area when tested in accordance with ASTM E283 at differential static pressure of 26.24 psf (30.32 Kg/m2).

b. Delamination: Adhesively bonded metal-faced or glass faced panels shall show no evidence of delamination, warpage or other deterioration or damage when subjected to the six "Accelerated Aging Cycles" specified in ASTM D 1037.
c. Thermal Conductance: The thermal transmittance of opaque panels shall not exceed the specified U-value, when tested in accordance with ASTM C 236. The average calculated thermal transmittance of the complete wall assembly including panels, windows, and all other components shall not exceed a U-value necessary to meet the energy budget of the facility. Determine U-values of components in accordance with ASTM C 236.
d. Window Tests: Windows shall meet the requirements specified herein. Windows shall meet the same requirements for deflection and structural adequacy as specified for framing members when tested in accordance with ASTM E 330 except permanent deformation shall not exceed 0.4 percent; there shall be no glass breakage, and no permanent damage to fasteners, anchors, hardware, or operating devices. Windows shall have no water penetration when tested in accordance with ASTM E 331.
e. Fire Resistance Tests: Insulation provided in the curtain wall system or field applied in conjunction with the curtain wall system shall have a flame spread rating not exceeding 75 and a smoke developed rating not exceeding 150 when tested in accordance with ASTM E 84, except as specified otherwise herein.

1) Insulation: Insulation contained entirely within panel assemblies which meet the flame spread and smoke developed ratings of 75 and 150 respectively. Insulation isolated from the building interior by masonry walls, masonry cavity walls, or encased in masonry cores is not required to comply with the flame spread and smoke developed ratings specified.

2) Curtain Wall Systems: Material for firestopping the opening between the edge of the floor slab and back of the curtain wall system, shall have not less than the flame spread and smoke developed ratings specified for insulation which is neither isolated from the building interior nor encased in masonry cores.

3) Curtain Wall Panels: Panels for fire resistive curtain walls shall have the required fire resistive rating when tested in accordance with ASTM E 119.

4) Firestopping Materials and Devices: Firestopping material and attachment devices shall be an effective barrier against the spread of fire, smoke, and gases for the required period of when exposed to the conditions of the standard ASTM E 119 time-temperature curve for a period equivalent to the fire rating of the floor system and shall also be rated noncombustible when tested in accordance with ASTM E 136.

B202003 1.1.5 Tolerances

Design and erect wall system to accommodate tolerances in building frame and other contiguous work. Provide with the following tolerances:

a. Maximum variation from plane or location shown on DOR-approved shop drawings: 1/8 inch (3 mm) per 12 feet (3.7 meters) of length up to not more than 1/2 inch (13 mm) in any total length.
b. Maximum offset from true alignment between two identical members abutting end to end in line: 1/16 inch (1.6 mm).

B202003 1.1.6 Structural Requirements

Deflection and Structural Tests: No curtain wall framing member shall deflect, in a direction normal to the plane of the wall, more than 1/175 of its clear span or 3/4 inch (20 mm), whichever is less, when tested in accordance with ASTM E 330, except that when a plastered or gypsum board surface will be affected the deflection shall not exceed 1/360 of the span. No framing member shall have a permanent deformation in excess of 0.2 percent of its clear span when tested in accordance with ASTM E 330 for a minimum test period of 10 seconds at 1.5 times the design wind pressures specified.

B202003 1.1.7 Thermal Movement

Fabricate, assemble, and erect system with adequate allowances for expansion and contraction of components and fastenings to prevent buckling damage, joint seal failure, glass breakage, and undue stress on fastenings or other detrimental effects.

B202003 1.1.8 Curtain Wall Components

The curtain wall and the components listed below shall be designed to meet the performance requirements below.

a. Framing Members in Curtain Wall Main Frames and Sash or Ventilator Members: extrusion strength shall meet or exceed the physical properties required for minimum ultimate tensile yield strength of 16,000 psi (110 MPa) when tested under AA ASDI, ASTM E34, and ASTM B221.
b. Joint and Glazing Sealants: Perform tests as required by ASTM C 920.
c. Preformed Compression Gaskets and Seals: ASTM C 864.
d. Preformed Lock-strip Gaskets: ASTM C 542 modified as follows: Heat age specimens seven days at 158 degrees F (70 degrees C), in zipped or locked position under full design compression. Unzip, cool for one hour, re-zip, and test lip seal pressure, which shall be minimum 2.5 pounds per linear inch on any extruded or corner specimen.
e. Spandrel Glass: Fallout resistance test, ASTM C 1048.
f. Porcelain Enamel: Acid resistance, color retention, and spall resistance tests, PEI 1001.
g. Anodized Finishes: Aluminum used for framing shall have a color anodized NAAMM MFM finish designation AA-MIO-C22-A34 and AA-MIO-C22-A44, meeting the requirements of AAMA 611.
h. Glass and Glazing:

   1) Conform to paragraph B202004, GLAZING.

   2) Insulating Glass shall meet ASTM E 546 or ASTM E 576 at minus 20 degrees F (minus 29 degrees C), no frost, or dew point.

i. Firestopping Material - Mineral fiber manufactured from asbestos-free materials, and conforming to ASTM C 612 or ASTM C 665, meeting fire resistance requirements specified.
j. Screens - ASTM D 3656, Class 2, 18 by 14 mesh, color charcoal.
k. Panels - Unless otherwise indicated, design for installation from outside the building. Provide vapor retarder on interior face of insulation. Seal edges of panels with cores of absorptive material to prevent entrance of water and allow venting of the core space to outside air.

1) Metal Facing Panels, Single Thickness - Metal facing panels shall be single thickness. Panel facing shall be flat sheet or textured type, made of porcelain enamel, aluminum, bronze, stainless steel and, with backside stiffeners or edge flanges spaced as required to meet flatness specified.

2) Adhesively Bonded Panels - Adhesively bonded panels shall be sandwich type, metal faced both sides, and bonded to form stable and composite unit. Nonexposed face shall be galvanized steel. Exposed face shall be porcelain enamel, aluminum, bronze, or stainless steel, with continuous laminated backing or internal stiffening ribs or breaks spaced as required to meet flatness specified.

3) Nonmetallic Panels

a) Panels shall be glass-faced on the side that will be exposed to view. Glass shall be spandrel glass with ceramic coating on its non-weathering surface and smooth finish on the exposed surface; backing shall be adhesively bonded to non-weathering surface.

b) Adhesively-bonded insulated panels shall be nonmetallic faced, sandwich type, tempered hardboard on exposed face and on non-exposed face. Apply coating of epoxy or polyester followed by application of inert aggregate to exposed face in the factory. Inert aggregate shall be natural stone chips.

l. Metal Windows – Conform to ANSI/AAMA/WDMA 101. Provide inside glazing with removable metal glazing beads except for windows with structural glazing. Factory-finish aluminum windows and provide with aluminum frame screens with aluminum mesh at operable sash, hardware and locks, and tinted glazing. Aluminum screens shall comply with ANSISMA 1004.

Exposed aluminum surfaces shall be factory finished with an AA 45 anodic coating or an AAMA organic coating. Provide a minimum of architectural Class II anodized coating or a baked enamel finish conforming to AAMA 2604 for residential construction. Provide a minimum of architectural Class I anodized coating or a high-performance organic coating conforming to AAMA 2605 for non-residential (commercial) construction. AAMA coatings shall have a total dry film thickness of 1.23 mils.

m. Metal Accessories - Provide gravel stops and fascias, flashings, metal sills, metal stools, louvers, venetian blind pockets, and closures. Fabricate accessories of sizes and shapes indicated from similar materials and finish as specified for the wall system.

B202004 EXTERIOR GLAZING

Provide setting and sealing materials, stops, and gaskets as recommended by the glass or acrylic sheet manufacturer.

Provide warranty for insulating glass units for a period of 10 years against development of material obstruction to vision (such as dust or film formation on the inner glass surfaces) caused by failure of the hermetic seal, other than through glass breakage. The Contractor shall require the glazing warranty for curtain wall glazing to be written directly to the Government.

Provide warranty for polycarbonate sheet glazing for a period of 5-years against breakage, coating delamination, and yellowing.

Glazing thickness indicated in the following paragraphs is the minimum acceptable thickness. Provide thicker glazing if required by the manufacturer for the given application.

B202004 1.1 GLASS

B202004 1.1.1 Clear Glass

Type I, Class 1 (clear), Quality q4 (A).

B202004 1.1.2 Heat-Absorbing Glass

ASTM 1036, Type I, Class 2 (heat absorbing and light reducing), Quality q3 (select), 1/4 inch (6 mm) thick, with a light transmittance of approximately 45 percent and total solar transmittance of not more than 50 percent for 1/4 inch (6 mm) thickness. Use warm color tint for warm color frames and cool color tints for white and gray frames.

B202004 1.1.3 Wire Glass

B202004 1.1.3 Wire Glass

Type II, Class 1, Form 1, Quality q8 Mesh m1 or Form 2, Quality q7, Finish f1, Mesh m1, 1/4 inch (6 mm) thick. Conform to NFPA 80. Glass for fire-rated windows shall be UL listed and shall be rated when tested in accordance with ASTM E 163.

B202004 1.1.4 Laminated Glass

ASTM 1172; fabricated from two pieces of Type I, Class 1, Quality q3 glass laminated together with a clear 0.030 inch (0.75 mm) thick polyvinyl butyral interlayer. The total thickness shall be nominally 1/4 inch (6 mm). Laminated glass used for anti-terrorism window assemblies must be a minimum of 1/4 inch (6 mm) thickness.

B202004 1.1.5 Insulating Glass Units

Insulating glass units shall have 1/2 inch (13 mm) airspace. Provide low emissivity coating. The inner light shall be one of the following:

a. Typically ASTM C 1036, Type I, Class 1, Quality q4, minimum 1/4 inch (6 mm) thick;
b. ASTM C 1048, Grade B (fully tempered), Style I (uncoated), Type I, Class 1 (transparent), Quality q4, minimum 1/4 inch (6 mm) thick when required by 16 CFR 1201 or possible glazing impact is anticipated;
c. ASTM C 1172, laminated glass as specified above, when required by antiterrorism requirements.

The outer light shall be one of the following:

a. Typically ASTM C 1036, Type I, Class 2 (tinted heat absorbing or reflective), Quality q4, minimum 1/4 inch (6 mm) thick;

b. ASTM C 1048, Grade B (fully tempered), Style I (uncoated), Type I, Class 2 (tinted heat absorbing or reflective), Quality q4, minimum 1/4 inch (6 mm) thick when required by 16 CFR 1201 or possible glazing impact is anticipated.

B202004 1.1.6 Tempered Glass

ASTM C 1048, Kind FT (fully tempered), Condition A (uncoated), Type I, Class 1 (transparent) or 2 (tinted heat absorbing, Quality q3, 1/4 inch (6 mm) thick.

B202004 1.1.7 Bullet-Resisting Glass

ASTM 1172 and UL 752, fabricated from Type I, Class 1, Quality q3 glass with polyvinyl butyral plastic interlayers between the layers of glass and listed by UL ABPMED as bullet resisting, with a power rating of Medium—Small Arms, High—Small Arms, Super—Small Arms, High—Rifle, or as required by the building program in accordance with UL 752.

B202004 1.1.8 Patterned Glass

ASTM 1036, Type II, Class 1 (translucent), Form 3 (patterned), Quality q7 (decorative), Finish f1 (patterned one side), Pattern p2 (geometric) 7/32 inch (5.55 mm) thick.

B202004 1.1.9 Spandrel Glass

ASTM C 1048, Kind HS or FT, Condition B (ceramic coated), Type I, Quality q5, 1/4 inch (6 mm) thick.

B202004 1.1.10 Spandrel Glass with Adhered Backing

ASTM C 1048, Kind HS or FT, Condition B (ceramic coated), Type I, Quality q5, 1/4 inch (6 mm) thick and shall pass the fallout resistance test specified in ASTM C 1048.

B202004 1.2 PLASTIC GLAZING

All plastic glazing exposed to the interior or exterior environment shall have an applied hardcoat.

B202004 1.2.1 Bullet-Resistant Plastic Sheet

Provide cast acrylic sheet or mar-resistant polycarbonate sheet laminated with a special interlayer, and listed in UL 752 as bullet resisting, Class I, II, III, clear, or in color.

B202004 1.2.2 Acrylic Sheet Glazing

ASTM D 4802, Type I, regular, Type II, heat resistant, in various thicknesses, clear or colored.

B202004 1.2.3 Polycarbonate Sheet Glazing

ASTM D 3595, ANSI Z97.1, Mar-resistant, Clear and smooth both sides when used for vision glazing; Translucent, textured both sides when used for obscure glazing, tint to match frame, ultraviolet stabilized, thickness to be specified in mm and inches, and listed in UL ABPMED as burglar resisting. Mar-resistant sheet shall have a change in haze of between 5 and 8 percent under silica carbide test, 56.44 ounces (1600 grams), ASTM D 673.

B202004 1.3 FRAGMENT RETENTION FILM FOR GLAZING

Existing windows that will not be replaced in the project shall have fragment retention film if they require antiterrorism protection. The film shall be polyester, polyethylene terephthalate, or a composite. Fragment retention film shall be optically clear and free of waves, distortions, impurities, and adhesive lines. The film may be a single layer or laminated. Lamination of the film shall only occur at the factory of the fragment retention film manufacturer. The film shall include an abrasion resistant coating on the surface that does not receive the film adhesive. Fragment retention film shall be a minimum thickness of 0.004 inch (0.1016 mm), or 0.007 inch (0.1778 mm), or 0.010 inch (0.254 mm). The film shall be supplied with an optically clear weatherable pressure sensitive adhesive. The adhesive shall contain ultraviolet inhibitors to protect the film for its required life and shall limit ultraviolet transmission to not more than 8 percent of the radiation between 300 and 380 nanometers. The adhesive shall not be water activated. A water-soluble detackifier or release liner may be incorporated over the adhesive to facilitate film application. The adhesive shall be 90 percent cured within 30 days of installation. Adhesives on film thicknesses of 0.010 inch (0.254 mm) and greater shall be a minimum of 0.0008 inch (0.02032 mm) thick.

B202090 OTHER EXTERIOR WINDOWS

B202090 1.1 OPERABLE TRAY PASS WINDOWS

Frames and glass channels shall be of heavy type 6063-TS aluminum extrusions with reinforcing as required. Include bullet-resistant glazing and heavy-duty operable pass tray. Unit shall have a minimum of architectural Class I anodized coating or a high-performance organic coating conforming to AAMA 2605. AAMA coatings shall have a total dry film thickness of 1.2 mils.

B2030 EXTERIOR DOORS

Exterior doors shall be heavy duty insulated steel doors and frames for service access. Door frames shall be welded. Corner knockdown door frames are not permitted.

Use heavy-duty overhead holder and closer to protect doors from wind damage. Provide kickplates on the inside face of all exterior doors.

Protect all exterior doors and related construction with low-infiltration weatherstripping and sealants. Provide threshold with offset to stop water penetration while maintaining accessibility compliance.

Conform to the design criteria of ASCE 7.

See section B203008, EXTERIOR DOOR HARDWARE, for door hardware requirements. For all installations, provide a recessed key box (Knox Box) approximately 7 inches x 7 inches (175 mm x 175 mm) with 4-3/4 inches (120 mm) solid steel door at primary exterior entry for storage of keys and access cards accessible by the fire department.

B203001 SOLID DOORS

B203001 1.1 STEEL DOORS

Hardware preparation shall be in accordance with ANSI A250.6. Doors shall be hung in accordance with ANSI A115.16.

B203001 1.1.1 Steel Doors

Steel doors shall be ANSI A250.8, Level 4, exterior, main entry doors, with a physical performance level of, Model 1 or 2.

Doors may be specified to be insulated. Door selection shall be specified in the project program according to the following:

a. Standard Duty Doors - Level 1, physical performance Level C, Model [1] [2]
b. Heavy Duty Doors - physical performance Level B, Model [1] [2]
c. Extra Heavy Duty Doors – ANSI A250.8, Level 3, physical performance Level A, Model [1] [2] [3]
d. Maximum Duty Doors – ANSI A250.8, Level 4, physical performance Level A, Model [1] [2]

B203001 1.1.2 Residential Insulated Steel Entry Door Systems

Insulated steel doors and frames shall be provided for residential construction with a core of polyurethane foam and an R factor of 10.0 or more (based on a k value of 0.16). Face sheets, edges, and frames of galvanized steel not lighter than 23 gage thick (0.7 mm) for paneled door faces, or 16 gage thick (1.5 mm) for solid doors, with vinyl door bottom flashing. Frames shall be a minimum 16 gage thick (1.5 mm) respectively; with magnetic weatherstripping; nonremovable-pin hinges; thermal-break aluminum threshold. Doors and frames shall receive phosphate treatment, rust-inhibitive primer, and baked acrylic enamel finish. Doors shall have been tested in accordance with ANSI A250.4 and shall have met the requirements for Level C. Prepare doors to receive specified hardware. Doors shall be 1-3/4 inch (44.5 mm) thick.

B203001 1.1.3 Insulation Cores

Insulated cores shall be of type specified, and provide an apparent U-factor of .48 in accordance with SDI 113 and shall conform to:

a. Rigid Polyurethane Foam: ASTM C591, Type 1 or 2, foamed-in-place or in board form, with oxygen index of not less than 22 percent when tested in accordance with ASTM D2863; or
b. Rigid Polystyrene Foam Board: ASTM C578, Type I or II; or
c. Mineral board: ASTM C612, Type I.

B203001 1.1.4 Accessories

a. Louvers shall comply with SDI 111-C, shall be stationary, sight-proof type. Use lightproof louvers if function of room requires darkness. Louver frames shall be 20-gage steel with louver blades minimum 24 gage.
b. Astragals: For pairs of exterior steel doors that will not have aluminum astragals or removable mullions, provide overlapping steel astragals with the doors.
c. Moldings: Provide moldings around glass of exterior doors and louvers. Provide non-removable moldings on outside of exterior doors. Secure inside moldings to stationary moldings, or provide snap-on moldings. Muntins shall interlock at intersections and shall be fitted and welded to stationary moldings.

B203001 1.1.5 Standard Steel Frames

ANSI A 250.8: Form frames with welded corners for installation in exterior walls. Form stops and beads of 20 gage steel. Frames shall be set in accordance with ASTM A250.11.

B203001 1.1.6 Anchors

Anchor all frames with a minimum of three jamb anchors and base steel anchors per frame, zinc-coated or painted with rust-inhibitive paint, not lighter than 18-gage. Mortar infill frames in masonry walls, and infill with gypsum board compound at each jamb anchor in metal frame walls. Only use surface exposed bolted anchors in concrete walls.

B203001 1.1.7 Finishes

a. Exterior Doors, Factory-Primed, and Field Painted Finish - Doors and frames shall be factory primed with a rust inhibitive coating as specified in ANSI A250.8. Factory-prime the doors on all six sides of each door. Manufacturer's primer and field painting shall be compatible with finish system in the paragraph "EXTERIOR PAINTING AND SPECIAL COATINGS".
b. Exterior Doors Galvanized Finish - Shall be Commercial Quality, Coating Class A, zinc coating in accordance with ASTM A-591 when facility is located further than 300 feet (91 meters) from the ocean. When facility is located within 300 feet (91 meters) of the ocean, provide G60 galvanized coating in accordance with ASTM A-924 and ASTM A-653.

B203001 1.2 WOOD DOORS

Solid wood or particleboard core with solid wood edge bands and reinforced at all hardware attachments to door with sound grade hardwood. Exterior wood doors are only allowed in residential construction where facility design, overhangs, and porches eliminate direct rain/moisture contact from wind-driven rain.

B203001 1.2.1 Stile and Rail Doors

Stile and rail doors shall be premium or custom grade Ponderosa pine stile and rail doors conforming to WDMA I.S.6A-01, heavy duty.

B203001 1.2.2 Flush Doors

Flush doors shall conform to WDMA I.S.1-A.

Exterior Flush Doors - Solid wood core, Type I conforming to WDMA I.S. 1-A.

B203001 1.2.3 Wood Door Louvers

Door louvers shall be of the manufacturer's standard design and shall transmit a minimum of 35 percent free air. Louver shall be a galvanized coated louvers with insect screens and comply with SDI 111-C, shall be stationary, sight-proof type. Use lightproof louvers if function of room requires darkness.

B203001 1.2.4 Door Light Openings

Where glazed openings are required, use the manufacturer's standard wood moldings. Moldings for doors to receive a natural finish shall be of the same species and color of the face veneer.

B203001 1.2.5 Fabrication

a. Marking - Each door shall bear a stamp, brand, or other identifying mark indicating quality and construction of the door.
b. Adhesives and Bonds - WDMA I.S. 1-A. Use Type I bond for exterior doors. Adhesive for doors to receive a natural finish shall be non-staining.

B203002 GLAZED DOORS

B203002 1.1 ALUMINUM GLAZED DOORS

See B202002 STOREFRONTS, paragraph titled, "Doors and Frames."

B203004 OVERHEAD AND ROLL-UP DOORS

Large exterior overhead and roll-up doors system shall consist of manual or automatic exterior doors and door assemblies. Do not use any roll-up doors on exterior walls of conditioned spaces.

B203004 1.1 ROLLING SERVICE DOORS AND GRILLES

Coiling overhead doors shall have minimum 22 gage thermal insulated slats. Electric operators shall have 3-button switches conforming to NEMA MG 1, NEMA ICS 1, and NEMA ICS 2, and auxiliary hand chain operation, weather-stripping and wind-locks. Doors shall be capable of withstanding the design wind loading of ASCE 7 and still operate normally. Finish of the door shall be hot-dipped galvanized with a painted finish.

B203004 1.2 SECTIONAL OVERHEAD DOORS

Sectional overhead doors shall conform to NAGDM 102, Residential or Commercial or Industrial door standards. Metal doors shall be horizontal sections hinged together which operate in a system of tracks to completely close the door opening in the closed position and make the full width and height of the door opening available for use in the open position. Doors shall be of the standard lift type designed to slide up and back into a horizontal overhead position and requiring a maximum of 16 inches (400 mm) of headroom for 2 inch (50 mm) tracks and 21 inches (525 mm) of headroom for 3 inch (75 mm) tracks, unless a low headroom type is required due to limited headroom, or a high lift type or vertical lift type is required to allow additional working clearance in the area immediately inside the door. If doors are electrically operated, pushbuttons shall be full-guarded to prevent accidental operation, and include limit switches to automatically stop doors at the fully open and closed positions. Limit switch positions shall be readily adjustable.

Doors shall be capable of withstanding the design wind loading of ASCE 7. Doors shall remain operable and undamaged after conclusion of tests conducted in accordance with ASTM E 330 using the design wind load. Form door sections of hot-dipped galvanized steel not lighter than 16-gage with flush surface without ribs or grooves. Sections shall be not less than 2 inches (50 mm) in thickness. Insulate door sections with fibrous glass or plastic foam to provide a "U" factor of 0.14 or less when tested in accordance with ASTM C 236. Cover interior of door sections with steel sheets of not lighter than 24-gage to completely enclose the insulating material. Provide galvanized steel tracks not lighter than 14-gage for 2 inch (50 mm) tracks and not lighter than 12 gage for 3 inch (75 mm) track. Provide a positive locking device and cylinder lock with two keys on manually operated doors.

B203005 HANGAR DOORS

DOR utilize UFGS Specification Section 08 34 16.10, *Steel Sliding Hangar Doors*, or Specification Section 08 34 16.20, *Vertical Lift Fabric Doors*, for the project specification submittal for the project. Refer to the Project Program for which type of hanger door is used on this project.

B203008 EXTERIOR DOOR HARDWARE

Provide the services of an Architectural Hardware Consultant (AHC), Certified Door Consultant (CDC), or an Electrified Hardware Consultant (EHC) to assist the Designer of Record in preparation of the door hardware schedule and product selection. The hardware consultant shall sign and seal the door hardware construction submittal. Provide, as far as possible, door hardware of one manufacturer’s make. All hardware shall be clearly and permanently marked by the manufacturer where it will be visible after installation.

B203008 1.1 HINGES

BHMA A156.1, size to match door size, but in no case less than 4-1/2 x 4-1/2 inches (114 mm x 114 mm), with non-removable pin and anti-friction bearing hinges. Use two hinges for doors 60 inches (1500 mm) or less in height and one additional hinge for each additional 30 inches (750 mm), or fraction thereof, in door height.

B203008 1.2 PIVOTS

BHMA A156.4

B203008 1.3 LOCKS AND LATCHES

Commercial (all construction except family housing) buildings locks and latches shall be BHMA A 156.13, Series 1000, Operational Grade 1, Security Grade 2 for exterior building entrances and other high-use doors not requiring exit devices. Use BHMA A-156.2, Series 4000, and Grade 1 for all Commercial buildings locks and latches not using Series 1000 hardware.

For Residential (family housing) projects, use Series 4000, Grade 2 hardware.

B203008 1.3.1 Combination Locks for Sensitive Areas and Vault Doors

If required for exterior use, see C102007 1.1.6 "Combination Locks" for the specification. This installation may require special weather protection.

B203008 1.3.2 Pushbutton Combination Locks

Where required, provide a heavy-duty, mechanical combination lockset with 5 pushbuttons, standard-sized knob, or lever, 3/4 inch (19 mm) deadlocking latch with 2-3/4 inch (70 mm) back-set. Provide deadbolt key override option. Safelock, Simplex, and Venn are acceptable manufacturers. Provide a hardware grade equivalent to Grade 1, series 4000. Include a 5-year parts and labor warranty.

B203008 1.4 CARD KEY SYSTEM

Where required, provide card key type access units. Provide lithium battery powered, magnetic stripe keycard locksets that are ANSI/BHMA A156.13, Series 1000, Grade 1, mortise or ANSI/BHMA A156.2, Series 4000, Grade 1, cylindrical locks, tamper resistant, UL listed with 1 inch (25 mm) throw deadbolt, 3/4-inch (19 mm) throw latch bolt, auxiliary deadlocking latch, and 2-3/4 inch (68.75 mm) backset. The latch bolt and the dead bolt shall be operated simultaneously by rotating inside lever. Locks with mechanical override lock cylinders are not acceptable. Locks shall be operated only by a correctly encoded keycard. Use of a newly issued keycard automatically re-keys the lock and voids the previous keycard. The lock shall re-lock immediately after outside lever is turned and latch retracted. Locks shall have memory that is capable of recording up to 140 entries into each room, identification of the keycard used to access the room, the date and time of entry. Entry information of the lock shall be retrievable by a data key that can be inserted into the lock and then taken to the front desk printer to display information. Other components that are required for this system at the front desk are a personal or laptop computer, printer and encoder to program each key.

For exit device locks with card key access, provide mortise type, narrow stile exit devices with 24 volt DC, solenoid option for card key exterior access at aluminum storefront doors. Provide mortise type exit devices with 24 volt DC, solenoid option with alarm and remote exterior access for card key access at insulated hollow metal doors. The alarmed exit device shall sound when exiting only.

System shall be capable of accepting a minimum of 12 keycard access levels, security auditing, and computer interfacing with existing installations management system. Provide a single point of contact customer service representative accessible by telephone with a 10-digit telephone number without additional dialing hierarchies except that a maximum 4-digit extension is permissible. On-site service shall be provided within 3 hours from request within the first 12 months of occupancy. Provide a 5-year parts and labor warranty.

B203008 1.5 EXIT DEVICES

BHMA A 156.3, Grade 1. Provide on exit doors if it is anticipated that more than 50 people may use a particular door in an emergency exit situation. Touch bars shall be provided in lieu of conventional crossbars and arms. Use manufacturer's integral touch bars in aluminum storefront doors.

B203008 1.6 EXIT LOCKS WITH ALARM

BHMA A 156.5.

B203008 1.7 CYLINDERS AND CORES

If required, provide cylinders and cores for new locks, including locks provided under other sections of this specification. Cylinders and cores shall have seven pin tumblers. Cylinders shall be products of one manufacturer, and cores shall be the products of one manufacturer. Rim cylinders, mortise cylinders, and knobs of bored locksets shall have interchangeable cores, which are removable by special control keys. Stamp each interchangeable core with a key control symbol in a concealed place on the core.

B203008 1.8 KEYING SYSTEM

Keying system shall be a master key system for the facility, unless more than one tenant/tenant command shall reside in a facility, or a grand master keying system, or great, grand master keying system if multiple tenants or buildings are required. The keying system shall be an extension of the existing keying system for additions to existing facilities. The keying system shall allow for construction interchangeable cores when subcontractors require keys during construction. If required, provide a key cabinet.

The Contractor shall coordinate a keying system meeting. The Contractor's Project Manager, Superintendent, Hardware Subcontractor, Electrical Subcontractor (if keying hardware is electric), Designer of Record, Contracting Officer, Public Works Base Hardware Specialist, and the Using Activity shall attend this meeting to establish the keying system for the project. This meeting is intended to identify base limitations, the necessary security, and access control within the facility. The meeting shall produce a marked up copy of the floor plan indicating the doors to receive locks and the doors to be keyed together, and any master keying or grand master keying.

B203008 1.9 KEYS

Furnish one file key, one duplicate key and one working key for each key exchange and for each master and grand master keying system.

B203008 1.10 LOCK TRIM

Lock trim shall be cast, forged, or heavy-wrought construction; and commercial, plain in design.

B203008 1.10.1 Knobs and Roses

Knobs and roses shall meet test requirements of BHMA A-156.2 and BHMA A-156.13.

B203008 1.10.2 Lever Handles

Provide lever handles in lieu of knobs as required by UFAS and ADAAG. Lever handles shall meet the test requirements of BHMA A-156.13 for mortise locks. All lever handles (mortise or cylinder) shall be the freewheeling type.

B203008 1.11 DOOR BOLTS

BHMA A 156.16, Grade 1. Provide two flush bolts for each inactive leaf of a pair of doors.

B203008 1.12 CLOSERS

BHMA A-156.4, Series C02000, Grade 1, with PT 4C, 1-1/2 inch piston, heavy duty forged arm, full size case. Provide closers for all exterior doors, fire-rated doors, corridor doors, stairway doors, and secure area doors, for non-residential (commercial) construction, as a minimum.

B203008 1.13 OVERHEAD HOLDERS

BHMA A 156.8, Grade 1. Provide for exterior doors for non-residential (commercial) construction.

B203008 1.14 DOOR PROTECTION PLATES

Kick plates shall conform to BHMA A-156.6. Provide kick plates on all doors with closers and all doors leading to corridors or circulation spaces. Provide armor plates on all doors to receive cart traffic. Provide mop plates on all doors in rooms with a mopable floor finish that do not have kick plates.

B203008 1.15 DOOR STOPS AND SILENCERS

BHMA A 156.16. Provide silencers, Type L03011, three per single door, and four per double door, for doors in hollow metal frames.

B203008 1.16 THRESHOLDS

BHMA A 156.21. Provide thresholds with offset to stop water infiltration, while maintaining accessibility requirements.

B203008 1.17 WEATHERSTRIPPING

BHMA A 156.22. Air leakage of weatherstripped doors shall not exceed 0.5 CFM of air per square foot of door for residential doors, and 1.25 CFM for non-residential doors (unless a more restrictive infiltration level is specified).

B203008 1.18 RAIN DRIPS

For all exterior doors that open to the outside, where the door swing area is not covered by an overhang, provide top and bottom rain drips complying with ANSI R3Y535 as a minimum. Greater weathersealing may be required by the geographic location of the project.

B203008 1.19 FINISHES

One of the following hardware finish systems shall be provided, and match the interior door hardware:

a. BHMA A156.18. Hardware shall have BHMA 630 finish (satin stainless steel), unless specified otherwise. Provide items not manufactured in stainless steel in BHMA 626 finish (satin chromium plated) over brass or bronze, except surface door closers which shall have aluminum paint finish, and except steel hinges which shall have BHMA 652 finish (satin chromium plated). Hinges for exterior doors shall be stainless steel with BHMA 630 finish or chromium plated brass or bronze with BHMA 626 finish. Exit devices may be provided in BHMA 626 finish in lieu of BHMA 630 finish. Exposed parts of concealed closers shall have a finish to match lock and door trim. Hardware for aluminum doors shall be finished to match the doors.

b. BHMA A156.18. Hardware shall have BHMA 612 finish (satin bronze), unless specified otherwise. Surface door closers shall have bronze paint finish. Steel hinges shall have BHMA 639 finish (satin bronze plated). Exposed parts of concealed closers shall have a finish to match lock and door trim. Hardware for aluminum doors shall be finished to match the doors. Hardware showing on interior of bathrooms, shower rooms, toilet rooms, washrooms, laundry rooms, and kitchens shall have BHMA 629 finish (bright stainless steel) or BHMA 625 finish (bright chromium plated).

B203090 OTHER EXTERIOR SPECIALTY DOORS

Where required, provide special function exterior doors and gates and assemblies required for the proper operation and functioning of the facility. Exterior doors system may include factory-finished or painted doors and frames.

B203090 1.1 AUTOMATIC ENTRANCE DOORS

B203090 1.1.1 Automatic Swinging Entrance Door Controller

Automatic swinging entrance doors shall be glazed aluminum doors and frames as specified in this section. Controller shall be a dual function safety device that utilizes planar K-band microwave motion detectors and active infrared presence sensors at each door to protect individuals in the path of the swinging door. The planar K-band motion detector shall be capable of sensing an individual moving as slow as 2.2 inches (55.8 mm) per foot. The infrared sensors shall employ both diffused presence sensors that see through the plane of the door, and distance measuring sensors. The infrared sensors shall constantly remain in operation. The safety device shall call for reactivation or creep closing function, depending on the location of the sensor. If the sensor is located on the swing side, it will call for reactivation; if it is located on the pull side, it will call for creep closing function. Sensing system shall be fully adjustable with a universal remote control, and meet or exceed the requirements of ANSI A156.10. System shall include aluminum guard rails and signage for additional personnel safety.

B203090 1.1.2 Automatic Sliding Entrance Door Controller

Automatic sliding entrance doors shall be glazed aluminum doors and frames as specified in this section. Controller shall be a dual function safety device that utilizes planar K-band microwave motion detectors and focused active infrared presence sensors at each door to protect individuals in the path of the sliding door. The planar K-band motion detector shall be capable of sensing an individual moving as slow as 2.2 inches (55.8 mm) per foot. The focused active infrared sensors shall overlap their patterns for full coverage of the motion pattern and extend its range all the way to the floor surface. The infrared sensors shall constantly remain in operation even when the door is in the closing cycle. Door and frame shall have a "break-away" feature that allows the door to be pushed open in an emergency exit situation.

-- End of Section --

THIS PAGE HAS BEEN INTENTIONALLY LEFT BLANK

SECTION B30
ROOFING
1/10

B30 GENERAL

B30 1.1 DESIGN GUIDANCE

Provide the design and installation in accordance with the following references. This Performance Technical Specification (PTS) adds clarification to the fundamental requirements contained in the following Government Standards. The general requirements of this PTS section are located in PTS Section Z10, *General Performance Technical Specification*.

Industry standards, codes, and Government standards that are referenced in the section text that are not found in the Unified Master Reference List (UMRL) in the Construction Criteria Base (CCB) at the Whole Building Design Guide Website are listed below for basic designation identification. Comply with the required and advisory portions of the current edition of the standard at the time of contract award.

B30 1.1.1 Government Standards

UNIFIED FACILITIES CRITERIA (UFC)

UFC 3-100-10N, *Architecture*

UFC 3-110-03, *Roofing*

UNIFIED FACILITIES GUIDE SPECIFICATIONS (UFGS)

B30 1.2 PERFORMANCE VERIFICATION AND ACCEPTANCE TESTING

Verification of satisfactory roofing system performance shall be via Performance Verification Testing, and by field inspection as detailed in this section of the RFP.

B30 1.2.1 Pre-Roofing Conference

Prior to beginning roofing work, the Contractor shall hold a Pre-Roofing Conference with the personnel directly responsible for the roofing systems work, as well as the roofing manufacturer's technical representative. At this time the Contractor will address any conflicts between the proposed roofing system, the design documents, and the scheduling of work / workers (trades) to assure a watertight roofing installation. Resolutions will be obtained and documented in writing prior to the start of roofing work. A quality assurance/quality control plan shall also be established at this time, inclusive of the roofing manufacturer’s recommended testing and inspections procedures, and in accordance with industry standard guidelines.

Contractor shall provide the following additional information at the pre-roofing conference: Procedure for the roof manufacturer's technical representative's onsite inspection and acceptance of the roofing substrate, roof insulation, and installation of the roofing in accordance with the roof system warranty, the name of the manufacturer's technical representatives, the frequency of the onsite visits, copies of the roof status reports from the technical representatives to the roof manufacturer, and pertinent structural details to the roofing system.

B30 1.2.2 Roof Design Assurance

If the roofing project is significant (Significant Roof – A single or group of buildings greater than 15,000 sf (1,400 m2)), or where extenuating circumstances of the roof project such as building use, content, safety, or visibility require a roofing consultant, the Contractor shall utilize the services of a Registered Roof Consultant (RRC) certified by the Roof Consultant Institute, or a Registered Professional architect or Engineer who specializes in roofing, to approve the roof design. The roof consultant must be engaged in roofing design and roofing construction as his primary endeavor. The roof consultant shall verify in writing that the design for the project is in accordance with the current edition of NRCA *Roofing and Waterproofing Manual*, UFCs, and RFP, and standard industry practices and building codes.

If a Roof Design Assurance Consultant is needed, consider using a Registered Roof Observer as a QC specialist in UFGS Section 01 45 00.05 20, *Design and Construction Quality Control*.

B30 1.2.3 Low Slope Roof Drain Test

Plug roof drains and fill with water to the edge of the drain sump for 24 hours. Not all drains shall be tested at one time. Measure water at the beginning and end of the 24 hour time period to ensure there is no leakage. Repeat testing until all leaks have been located, corrected, and no leaks found.

B30 1.2.4 Tests for Surface Dryness

Prior to application of roofing materials, perform surface dryness tests in presence of DOR. Asphalt of 350 to 400 degrees F (177 to 204 degrees C) shall not foam upon contact with substrate. After foaming test is performed, test for strippability (adherence).

B30 1.2.5 Quality Control Program

Contractor shall establish a quality control program to assure adherence to NRCA recommended Quality Control Guidelines for the Application of Roofing Systems and other specified application requirements. Compliance with UFGS Section 01 45 00.05 20, *Design and Construction Quality Control*, is required.

B30 1.3 DESIGN SUBMITTALS

Design submittals shall be in accordance with Z10, *General Performance Technical Specifications*, UFGS section 01 33 10.05 20, *Design Submittal Procedures*, UFC 1-300-09N, *Design Procedures* and UFC 3-100-10N, *Architecture*.

B30 1.4 CONSTRUCTION SUBMITTALS

Submit construction submittals in accordance with PTS Section Z10, *General Performance Technical Specifications*. In addition to the Z10 requirements, the Designer of Record (DOR) shall approve the following submittals as a minimum:

Test reports, color samples, certificates of conformance, warranties, close out documentation, and manufacturer's instructions for application and installation on all products used on the roof. Products used on the roof consist of but are not limited to structural deck, insulation, membrane or panels, Standing Seam Metal Roofing (SSMR), flashing, fasteners, nailers, and accessories.

B3010 ROOF COVERINGS

Roof coverings shall comply with the requirements of UFC 3-110-03, *Roofing*, and NRCA, *Roofing and Waterproofing Manual* found at http://www.nrca.net/rp/technical/manual/manual.aspx as the primary NAVFAC roofing criteria. Roof selection shall comply with UFC 3-330-02A, *Design: Commentary on Roof Systems*. Determine wind uplift using wind speed in accordance with ASCE-7.

Submit the INFORMATION CARD (see "Form 1" at the end of this section) Provide a typewritten card, laminated in plastic and framed in a weather-tight frame, or a photoengraved 0.032-inch (0.81 mm) thick aluminum card for the roof. This card shall be a minimum size of 8 1/2 x 11 inches (216 x 280 mm) and contain information listed in the attached Form 1. Install the card where directed. Furnish framed card and a duplicate card to the Designer of Record.

B301001 STEEP SLOPE ROOF SYSTEMS

Slope conversions from low slope to steep slope roofing systems must specifically address temporary waterproofing protection where new framing connections penetrate the existing low slope system.

B301001 1.1 SLATE ROOFING

Slate roofing systems shall be installed in accordance with NRCA Standards.

B301001 1.1.1 Warranty

Contractor shall supply manufacturer's standard warranty against defects in product workmanship and materials, including related metal flashing for a period of 30 years from the date of FINAL acceptance of the work.

B301001 1.1.2 Materials

a. Slate - Slate materials shall meet the grading standards of the National Slate Association. Field punching of slate shall be from the back of the slate.
b. Underlayment Membrane - For standard slate roofs, roofing felts shall be un-perforated asphalt-saturated felts, No. 30 or heavier. When roof slopes are less than 4:12, a double layer of felt shall be applied in mastic or hot asphalt shall be applied. At the roofing perimeter, eaves, rakes, sidewalls, head walls, valleys and all penetrations, install self-adhering membrane (3 foot band minimum) (900 mm band minimum).

c. Fastening - Nails shall be stainless steel or copper ring shank nails. Nails shall be long enough to penetrate the roof sheathing with heads of sufficient diameter to prevent pullover of slate. Slate shall hang on the shaft of the fastener, and drawn to, but not tight against the slate surface. Exposed nails on the top courses shall be sealed. In high wind areas, provide mechanical fastening plus sealant adhesive attachment. Provide screws, wire ties, hook nails, tile locks, and storm clips of brass, copper, or stainless steel as recommended by the manufacturer for the project.
d. Flashing - Flashings for slate roofing shall be 16 oz. (454 g) copper or 24 gage stainless steel, and 16 oz. (454 g) lead-coated copper, and shall be protected to prevent the potential for galvanic action by having contact with dissimilar metals.
e. Snow Guards - Provide snow guards of type compatible with roof system specified, and designed to meet design loads for the project location.

B301001 1.2 ASPHALT SHINGLES

The shingle roofing system shall be installed in accordance with NRCA *Roofing and Waterproofing Manual*(Latest Edition), "Steep Roofing", closed cut valley flashing shall not be allowed and per ASTM D 3462.

B301001 1.2.1 Warranties

The contractor shall furnish to the Government the manufacturer's standard 30-year warranty for the asphalt shingles. The Contractor shall also warrant that the asphalt shingle roofing system, as installed, is free from defects in workmanship. Provide a minimum 10-year fungus resistance warranty in southern climate and areas susceptible to fungus growth on shingles.

B301001 1.2.2 Materials

a. Shingles - Shingles shall meet ASTM D 3018, Type I, and ASTM D 3462, and shall weigh not less than 210 pounds per 100 square feet (95 kg per 9.3 square meters). Shingles shall meet the fire resistance requirements of UL 790 for Class 'A' and resist winds in accordance with ASCE-7 when tested in accordance with UL 997.
b. Shingle Underlayment - Asphalt-saturated felt conforming to ASTM D 226, Type I.
c. Self-Adhering Membrane - Rubberized asphaltic membrane, a minimum of 40 mils thick. Provide at all ridges, valleys, sidewalls and starter strips.
d. Nails - 11 or 12 gauge hot-dipped galvanized steel, corrosion resistant roofing nails, with sharp points and flat heads 3/8 inch to 7/16 inch (9.5 mm to 11 mm) diameter. Shank diameter shall be a minimum of 0.105 inch (2.7 mm) to a maximum of 0.135 inch (3.4 mm). Nails shall be long enough to penetrate through all layers of roofing materials and achieve secure anchorage into a roof deck. A minimum of 4 nails shall be used on a full width shingle, and six nails in high wind areas. Location of nails shall be as shown in manufacturers printed installation instructions. Staples are not permitted as a means of attachment.
e. Asphalt Roof Cement - ASTM D 4586, Type II
f. Asphalt Primer - ASTM D 41

B301001 1.3 ROOF TILES

B301001 1.3.1 Warranty

The contractor shall warrant for 30 years that the tile roofing system, as installed, is free from defects in workmanship.

B301001 1.3.2 Materials

a. Clay Tile - ASTM C 1167, machine-formed natural clay tiles, kiln-fired to vitrification and free from surface imperfections. Provide specially shaped units as required to provide watertight installation and closure. Form fastening holes prior to firing.
b. Concrete Tile - ASTM C 1492, molded or extruded, interlocking concrete roofing tile units, and specially shaped as required to provide a watertight installation and closure. Provide with cast-in anchor lugs, transverse weather checks, and fastening holes.

B301001 1.3.3 Underlayment

Underlayment type shall be determined by slope as follows:

10:12 slope and above shall have a minimum of one layer of number 30 felt, laid in shingle fashion with a minimum of a 2 inch (50 mm) lap.

4:12 to 10:12 slopes shall have a minimum of 2 layers of number 30 felt or one layer of a modified bitumen underlayment for use with standard size tile as long as tile is laid with a minimum of a 3 inch (75 mm) headlap. Underlayment shall be laid shingle fashion with a 19-inch (480 mm) lap.

Tiles shall not be laid on slopes less than 4:12.

a. Felt Underlayment - Asphalt saturated felt conforming to ASTM D 226, Type I.
b. Flexible Hip, Starter, and Ridge Flashing - Provide SBS Modified rubberized asphalt adhesive on a linear, low-density polyethylene membrane with a 60 mil total thickness, or 40-mils-thick self-adhered membrane underlayment in accordance with ASTM D 1970. At the roofing perimeter, eaves, rakes, sidewalls, head walls, valleys and all penetrations, install self-adhering membrane (3 foot (900 mm) band minimum).

B301001 1.3.4 Substrate Panels for Application Over Metal Deck

a. Glass Mesh Mortar Units - ASTM E 84, exterior type panels of Portland cement.
b. Fiberglass-Faced Gypsum Roof Board - ASTM 1177/C 1177M

B301001 1.3.5 Fasteners

a. Nails for Applying Felt Underlayment - Hot dip galvanized steel, 11-gage, of sufficient length to penetrate through substrate panels.

b. Materials for Installation of Tile - Nails shall be round-head, sharp point, 11 or 12 gauge, copper or stainless steel ring shank roofing nails. Nail heads shall be low profile, smooth and flat. Shanks may be smooth, barbed or otherwise deformed for added pull out resistance. Nails should be of sufficient length to penetrate one inch (25 mm) into wood ridge and hip boards, or battens, with heads of sufficient size to prevent pullover of the tile.

1) Wind Locks shall be of 10 gage copper or brass, 12 gage galvanized steel, or 0.084 inch (2.1 mm) stainless steel formed wire clips.

2) Provide hurricane clips with two nail holes in the horizontal leg for anchorage to deck or substrate.

3) Provide dual means of attachment of tile as follows, or as recommended by the tile manufacturer: Mechanical fastening plus hurricane clips, mechanical fastening plus foam setting, mechanical fastening plus sealant adhesive attachment of tile to tile in headlap areas.

B301001 1.3.6 Preservative-Treated Lumber - AWPA C1

B301001 1.3.7 Sheet Metal Flashing and Trim

Fabricate sheet metal flashing and trim of 20 oz. Copper, lead-coated copper or stainless steel to comply with SMACNA *Architectural Sheet Metal Manual*.

B301001 1.3.8 Bird-stop for Concrete Tile

Provide 20 oz.(567 g) copper, lead or stainless steel "L" section with 3-inch (75 mm) wide horizontal leg and vertical leg cut to conform to bottom profile of tile, or provide mortar formed bird-stops with weep holes, molded plastic bird-stops, or prefabricated tiles as recommended by roofing tile manufacturer.

B301001 1.3.9 Mortar

ASTM C 270, Type M mortar mix. Mortar set tile shall not be used in high-wind areas.

B301001 1.3.10 Asphaltic Plastic Cement

ASTM D 4586

B301001 1.3.11 Foam-set Tile

Provide foam plastic adhesive designed to meet the concrete and clay tile roofing industries requirements for adhering roofing tile to specified roof underlayment assemblies. Foam adhesive shall meet ASTM E 84, with a flame spread of less than 75. When tested in accordance with ASTM E 108, the roof covering system shall qualify as a Class 'A' roof covering system.

B301001 1.4 METAL ROOF PANELS (ARCHITECTURAL STANDING SEAM METAL ROOFS ON SUPPORTED SUBSTRATE)

B301001 1.4.1 Manufactured Sheet Metal Roofing

Provide galvanized steel or aluminum-zinc coated steel or aluminum panels formed at the manufacturing plant and conditioned for flatness. Panel thickness shall be determined by the requirements of NRCA, *Roofing and Waterproofing Manual*, but not less than 24 gauge for panels less than 16 inches wide (400 mm), and 22 gauge for panels greater than 16 inches (400 mm) wide. All panels greater than 12 inches (300 mm) wide shall have preformed reinforcing ribs or embossed for stiffening. The minimum gauge for aluminum panels shall be 20-gauge, .032 inch thick (.8 mm thick) or greater. Roofing design shall meet deflection and wind load requirements per building code.

The SSMR system covered under this specification shall include the entire roofing system; the standing seam metal roof panels, fasteners, connectors, roof securement components, and assemblies tested and approved in accordance with ASTM E 1592. In addition, the system shall consist of panel finishes, slip sheet, insulation, vapor retarder, all accessories, components, and trim and all connections with roof panels. This includes roof penetration items such as vents, curbs, skylights; interior or exterior gutters and downspouts; eaves, ridge, hip, valley, rake, gable, wall, or other roof system flashings installed and any other components specified within this contract to provide a weathertight roof system.

a. Provide inverted "L" Standing Seam shape roofing panels.
b. Panel Protection - Treat exposed cut edges with compatible coating comparable to the factory applied coating system for corrosion protection.
c. Sealants - Provide non-curing, non-skinning butyl based sealants and tapes for concealed locations such as within laps and under eaves. Provide polyurethane and curing butyl elastomeric sealants for exposed locations such as along top edge of surface mounted counter flashings.
d. Factory Color Finish - Provide factory applied, baked coating to the exterior and interior of metal wall panels and metal accessories. Provide exterior finish top coat of 70 percent polyvinylidene fluoride resin with not less than 0.8 mils dry film thickness. Provide exterior primer standard with panel manufacturer with not less than 0.8 mil dry film thickness. Interior finish shall consist of 0.5 mil dry film thick backer coat if permanently concealed from view by construction or the same coating and dry film thickness as the exterior coating if the panel interior side will be exposed. Provide factory-applied clear 70 percent PVF, 0.8 mil top coat and edge coating on all factory-cut or unfinished panel edges for projects within 300 feet (91 meters) of the ocean or industrial environments.

e. Warranty - Furnish manufacturer's no dollar limit materials and workmanship warranty for the roofing system. The warranty period shall be not less than 20 years from the date of Government acceptance of the work. The warranty shall be issued directly to the Government. The warranty shall provide that if within the warranty period the metal roofing system becomes non-watertight or shows evidence of corrosion, perforation, peeling paint, rupture or excess weathering due to deterioration of the roofing system resulting from defective materials or workmanship the repair or replacement of the defective materials and correction of the defective workmanship shall be the responsibility of the roofing system manufacturer. Repairs that become necessary because of defective materials and workmanship while roofing is under warranty shall be performed within 7 days after notification, unless additional time is approved by the Contracting Officer. Failure to perform repairs within the specified period of time will constitute grounds for having the repairs performed by others and the cost billed to the manufacturer. The Contractor shall also provide a 2 year contractor installation warranty. Coating shall not show a color change greater than 5 NBS color units per ASTM D2244, and not show chalking in excess of 10 per ASTM D4214.

f. Wind Uplift - Metal roofing systems shall be designed and attached to resist wind uplift pressures calculated in accordance with ASCE 7. Uplift resistance shall be validated by applicable Factory Mutual (FM), Underwriters Laboratories (UL), or ASTM uplift resistance test procedures.

B301001 1.4.2 Metal Roof Design Requirements

The design of the SSMR system shall be provided by the Contractor as a complete system. Roof panels, components, transitions, accessories, and assemblies shall be supplied by the same roofing system manufacturer. Provide to the DOR a design analysis signed by a Registered Professional Engineer employed by the SSSMR manufacturer. The design analysis shall include a list of the design loads, and complete calculations for the roofing system and its components; valley designs, gutter/downspout calculations, screw pullout test results, and shall indicate how expected thermal movements are accommodated.

B301001 1.4.3 Accessories

Provide other sheet metal flashings, trim moldings, closure strips, caps and other preformed metal panel accessories, of the same material, thickness and finish as panels, except accessories that are concealed after installation, and are aluminum or zinc-coated steel may be provided unfinished. Provide molded closure strips of closed-cell or solid-cell synthetic rubber, neoprene, or polyvinyl chloride premolded to match configurations of preformed metal panels. All accessories shall be manufactured or approved by the roof panel manufacturer.

B301001 1.4.4 Fasteners

Provide concealed fasteners for attaching panels to structural supports and to adjoining panels as approved and in accordance with printed manufacturer's recommendations.

B301001 1.4.5 Field Quality Control

Install in accordance with the approved manufacturer's erection instructions, shop drawings, and diagrams. Panels shall be in full and firm contact with attachment clips. Where prefinished panels are cut in the field, or where any of the factory applied coverings or coatings are abraded or damaged in handling or installation, they shall, after necessary repairs have been made with material of the same color as the weather coating, be approved before being installed. Seal openings through panels. Correct defects or errors in the materials. Replace materials which cannot be corrected in an approved manner with nondefective materials. Provide molded closure strips where necessary to provide weathertight construction. Use shims as required to ensure attachment clip line is true. Use a spacing gage at each row of panels to ensure that panel width is not stretched or shortened. Provide 30 pound layer of asphalt-saturated felt placed perpendicular to roof slope, covered by a slip sheet. Overlap side and end laps 75 mm 3 inches, offset seams in building paper with seams in felt.

Apply roofing panels with the standing seams parallel to the slope of the roof. Provide roofing panels in longest practical lengths from ridge to eaves (top to eaves on shed roofs), with no transverse joints except at the junction of ventilators, curbs, and similar openings. Install flashing to assure positive water drainage away from roof penetrations. Locate panel end laps such that fasteners do not engage supports or otherwise restrain the longitudinal thermal movement of panels. Attach panels to the structure with concealed clips incorporated into panel seams. Clip attachment shall allow roof to move independently of the structure, except at fixed points as necessary.

B301001 1.5 STRUCTURAL METAL ROOFING SYSTEM

B301001 1.5.1 Structural Standing Seam Metal Roof (SSSMR) System

The SSSMR system covered under this specification shall include the entire roofing system; the standing seam metal roof panels, fasteners, connectors, roof securement components, and assemblies tested and approved in accordance with ASTM E 1592. In addition, the system shall consist of panel finishes, slip sheet, insulation, vapor retarder, all accessories, components, and trim and all connections with roof panels. This includes roof penetration items such as vents, curbs, skylights; interior or exterior gutters and downspouts; eaves, ridge, hip, valley, rake, gable, wall, or other roof system flashings installed and any other components specified within this contract to provide a weathertight roof system.

B301001 1.5.2 Design Requirements

The design of the SSSMR system shall be provided by the Contractor as a complete system, in accordance with ASCE 7. Framing members and connections not indicated on the drawings shall be designed by the Contractor. Roof panels, components, transitions, accessories, and assemblies shall be supplied by the same roofing system manufacturer. Provide to the DOR a design analysis signed by a Registered Professional Engineer employed by the SSSMR manufacturer. The design analysis shall include a list of the design loads, and complete calculations for the support system (when provided by the Contractor), roofing system, and its components; valley designs, gutter/downspout calculations, screw pullout test results, and shall indicate how expected thermal movements are accommodated.

a. Dead Loads - The dead load shall be the weight of the SSSMR system. Collateral loads such as sprinklers, mechanical and electrical systems, and ceilings shall not be attached to the panels.

b. Concentrated Loads - The panels and anchor clips shall be capable of supporting a 300 pound concentrated load. The concentrated load shall be applied at the panel mid-span and will be resisted by a single standing seam metal roof panel assumed to be acting as a beam. The un-deformed shape of the panel shall be used to determine the section properties.

c. Uniform Loads - The panels and concealed anchor clips shall be capable of supporting the minimum uniform live load specified in the project program.

d. Roof Snow Loads - The design roof snow loads shall be shown on the contract drawings.

e. Wind Loads - The design wind uplift pressure for the roof system shall be shown on the contract drawings. The design uplift force for each connection assembly shall be that pressure given for the area under consideration, multiplied by the tributary load area of the connection assembly. The safety factor listed below shall be applied to the design force and compared against the ultimate capacity. Prying shall be considered when figuring fastener design loads.

   1) Single fastener in each connection: 3.0

   2) Two or more fasteners in each connection: 2.25

f. Framing Members Supporting the SSSMR System - New or revised framing members and their connections shall be designed in accordance with AISC 335, AISI SG-973, or SJI Specs & Tables. Maximum deflection under applied live load, snow, or wind load shall not exceed 1/180 of the span length.

g. Roof Panels Design – Deflections shall be based on panels being continuous across three or more supports. Deflection shall be calculated and measured along the major ribs of the panels.

   1) Steel panels shall be designed in accordance with AISI SG-973.

   2) Aluminum panels shall be designed in accordance with AA ADM. The panel deflection from concentrated loads shall not exceed 1/180 of the span length. The panel deflection under applied live load, snow, or wind load shall not exceed 1/180 times the span length.

B301001 1.5.3 Performance Requirements

a. The SSSMR shall be tested for wind uplift resistance in accordance with ASTM E 1592; SSSMR systems previously tested and approved may be acceptable.

b. SSSMRS Warranty Certificate -- At the completion of the project the Contractor shall furnish signed copies of the 5-year Warranty for Structural Standing Seam Metal Roof (SSSMR) System, a sample copy of which is attached to this section, and the 20-year Manufacturer's Material Warranties, and the manufacturer's 20-year system weather-tightness warranty.

   1) Contractor's Weather-tightness Warranty

   The SSSMR system shall be warranted by the Contractor on a no penal sum basis for a period of five years against

material and workmanship deficiencies; system deterioration caused by exposure to the elements or inadequate resistance to specified service design loads, water leaks, and wind uplift damage. The SSSMR system covered under this warranty shall include the entire roofing system including, but not limited to, the standing seam metal roof panels, fasteners, connectors, roof securement components, and assemblies tested and approved in accordance with ASTM E 1592. In addition, the system shall consist of panel finishes, slip sheet, insulation, vapor retarder, all accessories, components, and trim and all connections with roof panels. This includes roof penetration items such as vents, curbs, and skylights; interior or exterior gutters and downspouts; eaves, ridge, hip, valley, rake, gable, wall, or other roof system flashings installed and any other components specified within this contract to provide a weathertight roof system; and items specified in other sections of these specifications that are part of the SSSMR system. All material and workmanship deficiencies, system deterioration caused by exposure to the elements /or inadequate resistance to specified design loads, water leaks and wind uplift damage shall be repaired as approved by the DOR. See the attached Contractor's required warranty for issue resolution of warrantable defects. This warranty shall warrant and cover the entire cost of repair or replacement, including all material, labor, and related markups. The Contractor shall supplement this warranty with written warranties from the installer and system manufacturer, which shall be submitted along with Contractor's warranty; however, the Contractor shall be ultimately responsible for this warranty.

2) Manufacturer's Material Warranties

The Contractor shall furnish, in writing, the following manufacturer's material warranties which cover all SSSMR system components such as roof panels, anchor clips and fasteners, flashing, accessories, and trim, fabricated from coil material:

a) A manufacturer's 20 year material warranty warranting that the aluminum, zinc-coated steel, aluminum-zinc alloy coated steel or aluminum-coated steel as specified herein will not rupture, structurally fail, fracture, deteriorate, or become perforated under normal design atmospheric conditions and service design loads. Liability under this warranty shall be limited exclusively to the cost of either repairing or replacing nonconforming, ruptured, perforated, or structurally failed coil material.
b) A manufacturer's 20 year exterior material finish warranty on the factory colored finish warranting that the finish, under normal atmospheric conditions at the site, will not crack, peel, or delaminate; chalk in excess of a numerical rating of eight, as determined by ASTM D 4214 test procedures; or change color in excess of five CIE or Hunter Lab color difference (delta E) units in accordance with ASTM D 2244. Liability under this warranty is exclusively limited to refinishing with an air-drying version of the specified finish or replacing the defective coated material.
c) A roofing system manufacturer's 20 year, non-prorated, system weathertightness warranty.

B301001 1.5.4 Roof Panels

Panels shall be steel or aluminum and shall have a factory color or mill finish. Length of sheets shall be sufficient to cover the entire length of any unbroken roof slope for slope lengths that do not exceed 30 feet. When length of run exceeds 30 feet and panel laps are provided, each sheet in the run shall extend over three or more supports. Sheets longer than 100 feet may be furnished if approved by the DOR. Width of sheets shall provide not more than 24 inches of coverage in place. SSSMR system with roofing panels greater than 12 inches in width shall have standing seams rolled during installation by an electrically driven seaming machine.

a. Steel panels

1) Steel panels shall be zinc-coated steel conforming to ASTM A 653/A 653M; aluminum-zinc alloy coated steel conforming to ASTM A 792/A 792M, AZ 55 or 50 coating; or aluminum-coated steel conforming to ASTM A 463, Type 2, coating designation T2 65. Zinc, zinc-aluminum alloy, or aluminum coated panels shall be 0.023 inch (0.584 mm) thick minimum. Panels shall be within 95 percent of reported tested thickness as noted in wind uplift resistance testing required in paragraph "PERFORMANCE REQUIREMENTS".

2) Prior to shipment, if the panels are not specified with a factory color finish, mill finish panels shall be treated with a passivating chemical to inhibit the formation of oxide corrosion products. Panels that have become wet during shipment and have started to oxidize shall be rejected.

b. Aluminum Panels - Alloy conforming to ASTM B 209, temper as required for the forming operation, minimum 0.032 inch thick.

B301001 1.5.5 Concealed Anchor Clips

Concealed anchor clips shall be the same as the tested roofing system.

B301001 1.5.6 Accessories

Flashing, trim, metal closure strips, caps, and similar metal accessories shall be the manufacturer's standard products. Exposed metal accessories shall be finished to match the panels furnished.

B301001 1.5.7 Fasteners

Fasteners for steel roof panels shall be zinc-coated steel, aluminum, corrosion resisting steel, or nylon capped steel, type and size specified below or as otherwise approved for the applicable requirements. Fasteners for aluminum roof panels shall be aluminum or corrosion resisting steel. Fasteners for structural connections shall provide both tensile and shear ultimate strengths of not less than 750 pounds per fastener. Exposed roof fasteners shall be sealed or have sealed washers on the exterior side of the roof to waterproof the fastener penetration. Washer material shall be compatible with the roofing; have a minimum diameter of 3/8 inch for structural connections; and gasketed portion of fasteners or washers shall be neoprene or other equally durable elastomeric material approximately 1/8 inch thick. Exposed fasteners for factory color finished panels shall be factory finished to match the color of the panels.

a. Screws - Screws for attaching anchor devices shall be not less than No. 14
b. Bolts - Bolts shall be not less than 1/4 inch diameter, shouldered or plain shank as required, with locking washers and nuts.
c. Structural Blind Fasteners - Blind screw-type expandable fasteners shall be not less than 1/4 inch diameter. Blind (pop) rivets shall be not less than 9/32 inch minimum diameter.

B301001 1.5.8 Sub-purlins

Cold-formed supporting structural members/sub-purlins shall have a minimum thickness of 0.059 inches and minimum tensile yield strength of 50000 psi. Hot-rolled structural members shall have a minimum thickness of 0.25 inches and minimum tensile yield strength of 36000 psi. Sub-purlins shall be galvanized or shop painted, as required by the project program.

B301001 1.5.9 Factory Color Finish

Panels shall have a factory applied polyvinylidene fluoride finish on the exposed side. The exterior finish shall consist of a baked-on topcoat with an appropriate prime coat. The exterior coating shall be a nominal 2 mil thickness consisting of a topcoat of not less than 0.7 mil dry film thickness and the paint manufacturer's recommended primer of not less than 1.0 mil thickness. The interior color finish shall consist of the same coating and dry film thickness as the exterior. The exterior color finish shall meet the test requirements specified below.

a. Salt Spray test - A sample of the sheets shall withstand a cyclic corrosion test for a minimum of 2016 hours in accordance with ASTM D 5894, including the scribe requirement in the test. Immediately upon removal of the panel from the test, the coating shall receive a rating of not less than 10, no blistering, as determined by ASTM D 714; 10, no rusting, as determined by ASTM D 610; and a rating of 6, over 21/16 to 1/8 inch failure at scribe, as determined by ASTM D 1654.
b. Formability Test - When subjected to testing in accordance with ASTM D 522 Method B, 1/8 inch diameter mandrel, the coating film shall show no evidence of cracking to the naked eye.
c. Humidity Test - When subjected to a humidity cabinet test in accordance with ASTM D 2247 for 1000 hours, a scored panel shall show no signs of blistering, cracking, creepage, or corrosion.
d. Impact Resistance - Factory-painted sheet shall withstand direct and reverse impact in accordance with ASTM D 2794 0.500 inch diameter hemispherical head indenter, equal to 1.5 times the metal thickness in mils, expressed in inch-pounds, with no cracking.
e. Abrasion Resistance Test - When subjected to the falling sand test in accordance with ASTM D 968, Method A, the coating system shall withstand a minimum of 2.83 cubic feet (80 liters) of sand before the appearance of the base metal. The term "appearance of base metal" refers to the metallic coating on steel or the aluminum base metal.

f. Specular Gloss - Where considerations for flight line visibility (or other considerations) mandate, finished roof surfaces shall have a specular gloss value of 10 or less at an angle of 85 degrees or 30 plus or minus the value specified in the project program at 60 degrees when measured in accordance with ASTM D 523.
g. Pollution Resistance - Coating shall show no visual effects when covered spot tested in a 10 percent hydrochloric acid solution for 24 hours in accordance with ASTM D 1308.

B301001 1.5.10 Insulation

Thermal resistance of insulation shall be not less than the R-values shown on the contract drawings. R-values shall be determined at a mean temperature of 75 degrees F in accordance with ASTM C 518.

a. Polyisocyanurate Rigid Board Insulation for Use above a Roof Deck - Polyisocyanurate insulation shall conform to ASTM C 1289, Type II.
b. Blanket Insulation - Blanket insulation shall conform to ASTM C 991.
c. Glass Mat Gypsum Roof Board - Glass mat gypsum roof board for use above the deck or insulation for thermal protection shall have a flame spread - 0, smoke developed - 0, shall be water resistant and have a compressive strength of 500 psi. Glass mat gypsum roof board shall conform to ASTM C 1177/C 1177M.

B301001 1.5.11 Sealant

Sealants shall be elastomeric type containing no oil or asphalt. Exposed sealant shall be colored to match the applicable building color or clear and shall cure to a rubber like consistency. Sealant placed in the roof panel standing seam ribs shall be provided in accordance with the manufacturer's recommendations.

B301001 1.5.12 Vapor Retarder

a. Vapor Retarders as Integral Facing - Alloy conforming to ASTM B 209, temper as required for the forming operation, minimum 0.032 inch thick. Insulation facing shall have a permeability of 0.02 perms or less when tested in accordance with ASTM E 96.
b. Vapor Retarders Separate from Insulation - Vapor retarder material shall be polyethylene sheeting conforming to ASTM D 4397. A single ply of 10 mil polyethylene sheet; or, at the Contractor's option, a double ply of 6 mil polyethylene sheet shall be used. A fully compatible polyethylene tape with equal or better water vapor control characteristics than the vapor retarder material shall be provided. A cloth industrial duct tape in a utility grade shall also be provided to use as needed to protect the vapor retarder from puncturing.
c. Slip Sheet for Use with Vapor Retarder - Slip sheet for use with vapor retarder shall be a 5 lb. per 100 square feet rosin-sized, unsaturated building paper.

B301001 1.5.13 EPDM Rubber Boots

Flashing devices around pipe penetrations shall be flexible, one-piece devices molded from weather-resistant EPDM rubber. Rubber boot material shall be as recommended by the manufacturer. The boots shall have base rings made of aluminum or corrosion resisting steel that conform to the contours of the roof panel to form a weather-tight seal.

B301001 1.5.14 Prefabricated Curbs and Equipment Support

Prefabricated curbs and equipment supports shall be of structural quality, hot-dipped galvanized or galvanized sheet steel, factory primed and prepared for painting with mitered and welded joints. Integral base plates and water diverter crickets shall be provided. Minimum height of curb shall be 8 inches above finish roof. Curbs shall be constructed to match roof slope and to provide a level top surface for mounting of equipment. Curb flange shall be constructed to match configuration of roof panels. Curb size shall be coordinated, prior to curb fabrication, with the mechanical equipment to be supported. Strength requirements for equipment supports shall be coordinated to include all anticipated loads. Flashings shall not be rigidly attached to underline structure.

B301002 LOW SLOPE ROOF SYSTEMS

B301002 1.1 GENERAL REQUIREMENTS

a. Warranty (Except SSSMRS) - Furnish the roofing system manufacturer's materials and workmanship warranty for the roofing system. The warranty period shall not be less than 20 years from the date the Government acceptance of the work. The warranty shall be issued directly to the Government and shall not be limited in dollar value. The system warranty shall include roofing membrane, insulation, flashings, accessories, and attachments.
b. Wind Uplift - The complete roof covering assembly shall be rated in accordance with FM P7825, capable of withstanding an uplift pressure as determined by ASCE-7 and FM I-49, for perimeter and flashing attachment.
c. Fire Safety - The complete roof covering assembly shall meet ASTM E 108, Class 1A or UL 790, Class A; and be listed as Fire-Classified roof deck construction in the UL RMSD, or Class I roof deck construction in FM P7825. All components of the system shall be UL labeled. Complete roof covering assembly shall: 1) Be Class A or B rated in accordance with ASTM E 108 , FM 4470, or UL 790; and: 2) Be listed as part of Fire-Classified roof deck construction in UL RMSD, or Class I roof deck construction in FM P7825c.
d. Traffic Pads - Provide on roof system to protect roof from foot traffic. Provide traffic pads from roof access to and around roof mounted mechanical equipment and underneath removable mechanical equipment access panels. Traffic pads shall be of compatible material to roof.

B301002 1.2 BUILT-UP ASPHALT ROOFING (AGGREGATE SURFACED)

This paragraph covers the requirements for aggregate surfaced bituminous built-up roofing made up of glass felt, asphalt bitumen, and aggregate surfaced or modified bitumen cap sheet.

B301002 1.2.1 Materials

a. Asphalt - ASTM D 312, Type II, III, or IV
b. Felts - Base Sheet (GB) – ASTM D 4601, Type II without perforations

1) Ply Felt (GA) – ASTM D 2178, Type IV or VI

2) Ventilating Base Sheet VB) – ASTM D 4897

3) Flashing Felt (SBS Modified Base Sheet - MB) per ASTM D 6162 (with combined polyester and glass fiber reinforcing), Type II, Grade G (weighing 4.3(90 lbs./100 sf), and a thickness of 130 mils) or Grade S (weighing 58 lbs./100 sf and a thickness of 85

mils), ASTM D 6163 (with glass fiber reinforcing), Type II, Grade G (weighing 90 lbs./100 sf, and a thickness of 130 mils) or S (weighing 58 lbs./100 sf and a thickness of 85 mils), ASTM D 6164 (with polyester reinforcing), Type II, Grade G (weighing 90 lbs./100 sf, and a thickness of 130 mils) or S (weighing 70 lbs./100 sf and a thickness of 115 mils).

4) SBS Bitumen Cap Sheet (RSS) – ASTM D 6162 (with combined polyester and glass fiber reinforcing), Type II, Grade G (weighing 90 lbs./100 sf, and a thickness of 130 mils), ASTM D 6163 (with glass fiber reinforcing), Type II, Grade G (weighing 90 lbs./100 sf, and a thickness of 130 mils), ASTM D 6164 (with polyester reinforcing).

c. Primer - ASTM D 41
d. Asphalt Roof Cement - ASTM D 4586, Type II for vertical surfaces and Type I for horizontal surfaces.
e. Aggregate for Surfacing Built-up Roofing - ASTM D 1863
f. Fasteners - Provide metal fasteners of copper, aluminum, or stainless steel, compatible with materials to be penetrated. Fasteners shall be of sufficient length to achieve appropriate embedment or penetration into the substrate below.
g. Metal Discs - Flat discs or caps of zinc-coated steel not less than 28-gage and not less than 1-3/8 inches (35 mm) in diameter.
h. Traffic Pads - Preformed reprocessed rubber, compatible with the roof membrane, 1/4-inch (6.35 mm) minimum thickness, weighing not less than 1-1/2 pounds per square foot, to protect roof from foot traffic. Provide traffic pads around roof access and around roof mounted equipment and underneath removable mechanical equipment access panels.

B301002 1.2.2 FIELD QUALITY CONTROL

a. Tests for Surface Dryness - see paragraph B301002 1.2 for Performance Verification and Acceptance Testing requirements.

B301002 1.3 ETHYLENE PROPYLENE DIENE MONOMER (EPDM)

B301002 1.3.1 Materials

a. EPDM Sheet - ASTM D 4637.Â Ethylene Propylene Diene Monomer (EPDM), reinforced, 0.06 inch (1.5 mm) thick for fully adhered application. Seams shall be sealed with seam tape versus liquid adhesive, unless previously approved by DOR.
b. Flashing and Flashing Accessories - Flashing, including perimeter flashing, flashing around roof penetrations, and prefabricated pipe seals, shall be 0.06 inch (1.5 mm) minimum thick uncured EPDM sheet or 0.045 inch (1.1 mm) minimum thick cured EPDM.
c. Fasteners - Provide fasteners warranted by the roofing manufacturer for the EPDM sheet installation.
d. Roof Insulation - Provide rigid board insulation beneath the EPDM sheet as part of the warranted roof system, and compatible with the adhesive used in the installation.

B301002 1.4 MODIFIED BITUMINOUS MEMBRANE ROOFING

This paragraph covers the requirements for modified bituminous membrane sheet roofing, SBS modified for hot mopping or cold applied, with a minimum slope of 1/2 inch per foot. Contractor shall provide a complete modified bitumen roofing system, to include insulation, flashings, felts, primers and adhesives as recommended for the installation either on a nailable (plywood or metal deck) or non-nailable (concrete) substrate, from the materials below. Roof system shall be an Energy Star Qualified Product.

B301002 1.4.1 Materials

a. Asphalt - ASTM D 312, Type III or IV.
b. Ply Materials -

1) Ventilating Base Sheet (VB) – ASTM D 4897, Type II

2) Base Sheet (GB) – ASTM D 4601, Type II without perforations

3) SBS Modified Base Sheet (MB) – ASTM D 6162 (with combined polyester and glass fiber reinforcing), Type II, Grade S weighing 58 lbs./100 sf and a thickness of 85 mils), ASTM D 6163 with glass fiber reinforcing), Type II, Grade S (weighing 58 lbs./100 sf and a thickness of 85 mils), ASTM D 6164 (with polyester reinforcing), Type II, Grade S (weighing 70 lbs./100 sf and a thickness of 115 mils).

4) SBS Interply Sheet: ASTM D 6162, ASTM D 6164, ASTM D 6163, Type I or II, Grade S, minimum 80 mils (2.0 mm) thick.

5) SBS Bitumen Cap Sheet (RSS) – ASTM D 6162 (with combined polyester and glass fiber reinforcing), Type II, Grade G (weighing 90 lbs./100 sf, and a thickness of 130 mils), ASTM D 6163 (with glass fiber reinforcing), Type II, Grade G (weighing 90 lbs./100 sf, and a thickness of 130 mils), ASTM D 6164 (with polyester reinforcing), Type II, Grade G (weighing 90 lbs./100 sf, and a thickness of 130 mils). Provide polyester reinforced cap sheet on roofs expected to experience high levels of traffic, on roofs with congested equipment, where equipment is expected to receive regular service or high maintenance, and where other service conditions warrant.

c. Mineral Roofing Granules - Factory applied, requiring no further coating.
d. Primer - ASTM D 41
e. Asphalt Roof Cement - ASTM D 4586, Type II for vertical surfaces, Type I for horizontal surfaces.
f. Fasteners - Provide non-corrosive fasteners meeting the requirements of FM A/S4470.
g. Asphalt Adhesive - ASTM D 4479, Type III.

B301002 1.5 STRUCTURAL STANDING SEAM METAL ROOFING

See B301001 1.5.1 "Structural Standing Seam Metal Roof System" for SSSMR requirements.

B301003 ROOF INSULATION & FILL

The insulation system shall be coordinated with the mechanical design to suit the energy requirements of the facility.

B301003 1.1 MINERAL FIBER BLANKET INSULATION

This paragraph covers the requirements for mineral fiber blanket thermal insulation in attics and above ceilings.

B301003 1.1.1 Products

a. Blanket Insulation - ASTM C 665, Type I, II, or III, as appropriate for the installation, Class A, membrane-faced surface with a flame spread of 25 or less; and a smoke developed rating of 150 or less when tested in accordance with ASTM E 84. Indicate insulation R-values on the design drawings.
b. Blocking – Treated wood, metal, un-faced mineral fiber blankets in accordance with ASTM C665, Type I. Blocking around chimneys and other heat producing devices shall be non-combustible and shall meet the requirements of ASTM E 136.
c. Vapor Retarder - 6 mil (minimum) thick polyethylene sheeting conforming to ASTM D 4397, with a water permeance value of 1 perm or less when tested according with ASTM E 96.

B301003 1.2 ROOF AND DECK INSULATION

This paragraph covers the requirements for insulation materials used below the roofing systems.

B301003 1.2.1 Insulation Types

Roof insulation shall have an R-value determined per ASHRAE Standard 90.1 (latest edition) and be one or an assembly of a maximum of three of the following materials and compatible with attachment methods for the specified insulation and roof system:

a. Expanded Perlite Board – ASTM C 728, minimum thickness of 3/4" boards, and 4' by 4' board size.
b. Polyisocyanurate Board – ASTM C 1289, with a minimum compressive strength of 138 kPa (20 psi), unless overlaid with another board with a comparable or greater compressive strength. Use insulation facer as recommended by the roofing material manufacturer. Board size shall be restricted to 4' by 4' when applied in direct contact with concrete deck.
c. Composite Boards – ASTM C 984 (Polyisocyanurate-perlite) or ASTM C 1050 (Polystyrene-wood fiberboard), Type III, Grade 1, Class A, or ASTM C 1289, Type V, oriented strand board or waferboard on one side and fibrous felt or glass fiber mat membrane or aluminum foil on the other.
d. Wood Fiber (high density) – ASTM C 208

B301003 1.2.2 Tapered Roof Insulation

On portions of the roof where the sloping of structure does not allow the minimum slopes, provide a factory tapered roof insulation system to provide positive drainage of roof system, and to include drainage around curbs, penetrations, and projections through the roof plane. For new construction, provide one layer of the tapered roof insulation assembly factory tapered to a slope not less than 1/2" per foot (13 mm per 300 mm). For re-roofing applications where slopes of 1/2" per foot (13 mm per 300 mm) cannot be achieved, provide a minimum of 1/4" per foot (6.35 mm per 300 mm) slope.

B301003 1.2.3 Protection Board

Provide for use as a thermal barrier (underlayment) or protection board for hot-mopped applications.

B301003 1.2.4 Glass Mat Gypsum Roof Board

ASTM C 1177, with a 0 Flame Spread and 0 Smoke Developed when tested in accordance with ASTM E 84.

B301003 1.2.5 Bitumens

a. Asphalt Primer - ASTM D 41
b. Asphalt - ASTM D 312, Type III or IV
c. Asphalt Roof Cement - ASTM D 4586, Type I for horizontal surfaces, Type II for vertical and sloped surfaces. Roof cement shall be compatible with membrane materials.

B301003 1.2.6 Underlayment

a. Asphalt-Saturated Felt Base Sheet for Single Layer Application - ASTM D 4869, Type II or ASTM D 226, Type II (30 pounds).
b. Polymer-Modified Self-Adhering Bitumen Sheet, 40 mil (1.1 mm) minimum thickness. Provide at roof perimeter, valley, and roof penetration locations as a minimum.

B301003 1.2.7 Seal at Penetrations

Provide pre-manufactured flashing components for use in single-ply roofing applications. Seal laps and penetrations to prevent moisture vapor penetration. Adhesives, sealants, prefabricated components, and spray foam products may be required.

B301003 1.2.8 Fasteners

Fasteners shall be flat, round or hexagonal steel (not less than 1-3/8"(35 mm) diameter) and 28 gage, or plastic plates (not less than 3 inches (75 mm) in diameter).

Fasteners in lightweight cellular concrete decks shall penetrate at least 1 inch (25 mm) but not more than 1-1/2 inches (32 mm) into the deck. Withdrawal resistance from lightweight cellular concrete deck shall be not less than 40 lbs. each or 120 lbs. each in metal deck.

Fasteners in steel decks shall be hardened fasteners or screws conforming to FM A/S4470 and listed in FM P7825 for Class I roof deck construction.

Fasteners shall be place to withstand an uplift pressure required by the project program in the field of the roof and FM LPDS 1-49 for perimeter component and flashing attachment.

Roofing Nails - Provide corrosion resistant ring shank nails of sufficient length to penetrate a minimum of 1 inch (25 mm) into wood nailers or so as to provide appropriate embedment in substrate below. Fasteners shall conform to FM A/S4470, and be placed to withstand an uplift pressure of 90 psf (4.3 kPa) conforming to FM P7825, and FM 1-49 for perimeter fasteners.

B301003 1.2.9 Wood Nailers

Wood nailers shall be pressure-preservative-treated in accordance with AWPA M2 Standards, permanently marked or branded, and installed flush with the top of the adjacent insulation board. Separate treated wood nailers from roofing metals with underlayment.

B301003 1.2.9.1 Fasteners

Provide stainless steel, double hot-dipped galvanized or other corrosion resistant fasteners recommended by the treatment manufacturer for use with treated wood.

B301004 FLASHINGS & TRIM

B301004 1.1 FLASHING AND SHEET METAL

This paragraph covers the requirements for flashing and sheet metal work including scuppers, splash pans, and sheet metal roofing. Flashing and sheet metal shall be provided in accordance with roof manufacturer's printed installation instructions and in compliance with NRCA and SMACNA recommendations.

B301004 1.1.1 Materials

Furnish sheet metal items in minimum 8 to 10 foot (2.44 to 3.05 meter) lengths. Sheet metal items include the following: gutters, including hangers; downspouts; counter-flashings; gravel stops and fascias; cap, valley, stepped, base and eave flashings and related accessories.

a. Copper Sheet and Strip - ASTM B 370, cold-rolled temper.
b. Lead-Coated Copper Sheet - ASTM B 101
c. Lead Sheet - Minimum weight 4 pounds per square foot (.19 kPa).
d. Steel Sheet, Zinc-Coated (Galvanized) - ASTM A 653/ A 653M. Galvanized steel items shall have a baked-on, factory applied finish of polyvinylidene fluoride or an equivalent fluorocarbon coating with a minimum thickness of 0.8 to 1.3 mils.
e. Stainless Steel - ASTM A-167, Type 302 or 304, 2D finish fully-annealed, dead-soft temper.
f. Aluminum Alloy Sheet and Plate - ASTM B 209
g. Pre-Finished Aluminum - Provide trim, gravel stops, and fascias of Pre-finished aluminum. Finish shall be baked-on factory applied color coating of polyvinylidene fluoride (PVF2) or other equivalent fluorocarbon coating with a minimum thickness of 0.8 to 1.3 mils.
h. Aluminum alloy, Extruded Bars, Rods, Shapes, and Tubes - ASTM B 221
i. Solder - ASTM B 32
j. Polyvinyl Chloride Reglet - ASTM D 1784, Type II
k. Asphalt Primer - ASTM D 41
l. Fasteners - Fasteners shall be of the same or compatible metal with the item being fastened. Stainless steel fasteners shall be used to fasten dissimilar materials.

B301004 1.1.2 Field Quality Control

Fabrication and installation of sheet metal items shall be as follows:

a. Install work with watertight and hairline joints, without waves, warps, buckles, fastening stresses, or distortion, allowing for expansion and contraction.
b. Make surfaces to receive sheet metal plumb and true, clean, even, smooth, dry, and free of defects and projections that could affect the application.
c. Provide sheet metal flashing in angles formed where roof decks abut walls, curbs, ventilators, pipes, or other vertical surfaces and wherever indicated and necessary to make the work watertight.
d. Provide prefabricated inside and outside corners at all sheet metal intersection pieces. Minimum leg length shall be 12 inches, and maximum length shall be 18 inches.
e. Sheet metal shall be fabricated to conform to the contours of surfaces to which applied.
f. All sheet metal cap flashings shall have waterproof membrane underlayment installed behind or below the metal components.
g. Provide conforming sheet metal closures at all flashing termination conditions.
h. Provide fastenings and accessories as required to provide a securely attached, watertight construction. Cleats shall be a minimum of one gage heavier than the component to be attached.
i. Where sheet metal components are to be embedded in the roofing system, prime both sides of all metal flanges prior to installation.

B301005 GUTTERS AND DOWNSPOUTS

Provide gutters and downspouts compatible with roofing material and finish. Concealed (interior) gutters and downspouts are prohibited. The primary and secondary drainage systems shall be sized per applicable Plumbing and Building Codes. Finish shall be baked-on factory applied color coating of polyvinylidene fluoride (PVF2) or other equivalent fluorocarbon coating with a minimum thickness of 0.8 to 1.3 mils.

B301006 ROOF OPENINGS AND SUPPORTS

B301006 1.1 GENERAL REQUIREMENTS

Provide flashings for roof openings and supports as recommended by the NRCA and as specified below:

When existing pitch pans cannot be avoided and must be utilized, insure pitch pan is a preformed pan with minimum 4-inch (100 mm) height and 2-inch (50 mm) flange with 2-inch (50 mm) clearance on all sides of the penetration. Fill bottom 1/3 with non-shrink grout. Fill remainder with pourable elastomeric sealer sloped to drain. For round penetrations, provide a metal umbrella cap clamped to the penetration.

Assure all penetration flashings extend minimum 8 inches (200 mm) above the finished roof surface. Use round shapes to construct equipment supports. Equipment supports should be raised on a continuous curb a minimum of 14 inches (350 mm), but not less than as required by the NRCA.

B301006 1.2 ROOF HATCHES

Construct using NRCA approved techniques and details. Provide roof hatch where required by OSHA, or as access to roof when roof mounted equipment is used or other routine roof maintenance is required.

B301006 1.2.1 Construction

Provide insulated roof hatches of 14 gage galvanized steel with 22-gage galvanized steel liner or 18 gage aluminum liner, and have integral curb, flange, and flashings for securing to roof deck. Hinge shall be heavy-duty zinc plated steel with non-removable pins. Latching mechanism shall be zinc-coated steel slam latch with inside and outside levers. Springs shall be greased compression springs in telescopic tubes. Provide interior locking of roof hatch. Provide a safety rail or ladder extension. Size the roof hatch to allow access of routine maintenance equipment, but not less than 2'-6" x 3'-0". Hatch and access ladders shall conform to OSHA and other applicable safety standards.

B301006 1.3 GLAZED ROOF OPENINGS

This paragraph covers the requirements for skylights manufactured from glass-fiber or thermoplastic carbonate.

Skylights and other glazed roof openings shall be used only to supplement interior lighting levels (generally in steep slope or vertical applications), and otherwise, are discouraged from use. Proper detailing is critical, and shall be scrutinized closely to minimize the likelihood of future leaks at these locations.

B301006 1.3.1 Warranty

The contractor shall furnish to the Government the manufacturer's complete warranty for materials, workmanship, and installation. The warranty is for 10 years from the time of project completion. The warranty shall guarantee, but shall not be limited to, the following:

a. Light transmission and color of the panels shall not change after exposure to heat of 300 degrees F (149 degrees C) for 25 minutes.
b. There is no delamination of the panel affecting appearance, performance, weatherability, or structural integrity of the panels or the completed system.
c. There is no fiberbloom on the panel face.
d. Change in light transmission of no more than 6% per ASTM D 1003, and in color (yellowing index) no more than 10 points in comparison to the original specified value over a 10 year period.

B301006 1.3.2 Skylight Panels

Skylight panels shall be constructed of glass-fiber reinforced polyester or extruded cellular thermoplastic polycarbonate materials. Glass-fiber reinforced panels shall conform to ASTM D 3841 and to the requirements of AAMA 1600/I.S.7.

a. Non-Combustible Grid Core - The aluminum I-beams shall be 6063-T6 with provisions for mechanical interlocking of muntin-mullion and perimeter to provide full bonding surface to contact the face material. Panels shall withstand 1200 degrees F (650 degrees C) for a minimum of one hour without collapse or exterior flaming.

b. Adhesive - The laminate adhesive shall meet the following requirements: 1) Tensile strength of 750 psi in accordance with ASTM C 297. 2) Shear strength shall meet or exceed the following per ASTM D 1002: a) 540 psi at 50% relative humidity and 73 degrees F, b) 800 psi under accelerated aging per ASTM D 1037 at room temperature, c) 250 psi under accelerated aging per ASTM D 1037 at 182 degrees F, d) 1400 psi after 500 hour Oxygen Bomb per ASTM D 572, and e) 100 psi at 182 degrees F.
c. Panel Construction - Panels shall consist of fiberglass faces laminated to an aluminum I-beam grid core and shall not deflect more than 1.9 inches (48 mm) at 30 psf (1.44 kPa) in 10 feet (3.048 meters) per ASTM E 72, without a supporting frame.

B301006 1.3.3 Thermoplastic Polycarbonate Panels

The glazing panels shall meet the following requirements:

a. The interior flame spread classification shall be Class I in accordance with ASTM E 84, with a smoke developed rating no greater than 70 in accordance with ASTM D 2843.
b. The exterior and interior faces shall be an approved light transmitting panel with a CC1 fire rating classification in accordance with ASTM D 635.
c. Self-ignition shall be greater than 1058 degrees F (570 degrees C) in accordance with ASTM D 1929.
d. Fire rated roof assembly translucent panels shall be successfully evaluated for fire from exterior exposure per ASTM E 108 to meet Class 'A' rating, and be listed by an independent recognized listing laboratory.

B301006 1.4 GUARDS

Provide rails or guards as required by the OSHA, the International Building Code or other applicable safety standards.

B301090 OTHER ROOFING

B301090 1.1 LIGHTNING PROTECTION

Lightning protection component penetrations and attachments shall be sealed and flashed and anchored in a permanent manner and in a manner to avoid the degradation of the watertight integrity of the roof system. Do not cut or otherwise disturb the roof membrane. Mastic seals in the plane of the roof are unacceptable. Anchor plates set in mastic shall be set on roof surface cleaned of aggregate and loose material prior to mastic application.

B301090 1.2 ROOF DRAINS (EXISTING)

Where existing roof drains are to be reused in roof replacement construction, the contractor shall provide new, compatible flashing materials, a new drain clamping ring and new bolts for anchorage. Reuse of existing clamping ring and bolts is unacceptable.

-- End of Section --

THIS PAGE HAS BEEN INTENTIONALLY LEFT BLANK

SECTION C10

INTERIOR CONSTRUCTION
03/10

C10 GENERAL

C10 1.1 DESIGN GUIDANCE

Provide the design and installation in accordance with the following references. This Performance Technical Specification (PTS) adds clarification to the fundamental requirements contained in the following Government Standards. The general requirements of this PTS section are located in PTS Section Z10, *General Performance Technical Specification*.

Industry standards, codes, and Government standards that are referenced in the section text that are not found in the Unified Master Reference List (UMRL) in the Construction Criteria Base (CCB) at the Whole Building Design Guide Website , are listed below for basic designation identification. Comply with the required and advisory portions of the current edition of the standard at the time of contract award.

C10 1.1.1 Industry Standards and Codes

Sealant, Waterproofing & Restoration Institute

C10 1.1.2 Government Standards

UNIFIED FACILITIES CRITERIA (UFC)

UFC 1-200-01, *General Building Requirements*

UFC 3-100-10N, *Architecture*

UFC 3-120-10, *Interior Design*

C10 1.2 PERFORMANCE VERIFICATION AND ACCEPTANCE TESTING

Verification of satisfactory interior construction assemblies' performance shall be via Performance Verification Testing, as detailed in this section of the RFP. Provide special tests and special inspections in accordance with UFGS Section 01 45 00.05 20, *Design and Construction Quality Control*. The Contractor shall pay the cost of all testing.

C10 1.2.1 Slump and Compressive Strength Tests for Grout

Provide slump between 8 and 11 inches (200 and 275 mm). Provide minimum grout strength of 2000 PSI in 28 days, as tested per ASTM C 1019.

C10 1.2.2 Door Closure Field Test for Demountable Partitions, Retractable Partitions, Operable Panels, and Accordion Partitions

Perform a flashlight test of all joints in partitions and partition to wall, floor, and ceiling. No light from a flashlight shall be visible from the opposite side of the partition. Adjust partition at locations where light is visible, and re-test.

C10 1.2.3 Field Test for Sprayed Fire-Resistive Materials

A qualified testing and inspection agency shall be engaged to prepare testing and adhesion reports to test for bond strength. Bond strength shall be tested per ASTM E 736 and be found to meet the requirements in UL's *Fire Resistance Directory* for coating materials.

C10 1.3 DESIGN SUBMITTALS

Design submittals shall be in accordance with Z10, *General Performance Technical Specifications*, UFGS section 01 33 10.05 20, *Design Submittal Procedures*, UFC 1-300-09N, *Design Procedures*, UFC 3-100-10N, *Architecture*, and UFC 3-301-01, *Structural Engineering*.

C10 1.4 CONSTRUCTION SUBMITTALS

Submit construction submittals in accordance with PTS Section Z10, *General Performance Technical Specifications*. In addition to the Z10 requirements, the Designer of Record (DOR) shall approve the following submittals as a minimum:

Provide doors, door hardware, windows and glazing, cabinets and countertops, casework, and fireproofing/firestopping.

All structural elements necessary for construction

C1010 PARTITIONS

For general use, metal studs and standard grade GWB, CMU with prime filler coat, or CMU/cast-in-place concrete with GWB or skim coat plaster are acceptable unless shown otherwise in the Project Program. Reinforce points where doorknobs can strike a wall and anchorage points for wall mounted equipment.

Provide control joints and installation techniques as recommended by the manufacturer. See PTS Section C30, *Interior Finishes*, for additional information.

Provide painted GWB with access panels at surfaces furred for HVAC, plumbing and other utility services and controls behind wall surfaces.

Acceptable systems where "IMPACT RESISTANCE" (areas subject to physical abuse or wear) is designated in the project program requirements for impact resistance systems include:

a. CMU/cast-in-place concrete with or without plaster or furred impact resistant GWB or surface applied impact resistant textured acrylic architectural coating system.
b. GWB/metal stud system reinforced for impact resistance with a double layer of gypsum board using at least one layer of impact resistant gypsum board to resist denting and puncturing on the impact surface. If wall is subjected to impact on both sides, both sides of the stud require a double layer of gypsum board. Structural, mechanical, and acoustical design requirements effect the metal stud/gypsum support configuration.

C101001 FIXED PARTITIONS

Provide fixed partitions, except where demountable or retractable partitions are specifically required by the "Room Requirements", to include wood or metal studs, GWB, plaster, masonry, and cast-in-place concrete walls. Sound-rated partition assemblies shall have a minimum Sound Transmission Coefficient (STC) as required by the project program. Construct sound-rated bulkheads above partition assemblies for continuity to the deck above.

C101001 1.1 CAST-IN-PLACE INTERIOR CONCRETE WALLS

Accomplish work in accordance with UFC 1-200-01, ACI 117, and 301/301M. Concrete Mix Design shall be suitable for the job conditions.

C101001 1.2 MASONRY PARTITIONS

Accomplish work in accordance with ACI 530.1/ASCE 6/TMS 602 and associated ASTM Standards for concrete masonry wall construction.

C101001 1.2.1 Testing

Masonry strength shall be determined in accordance with ACI 530.1. Where fire-rated assemblies are indicated, provide concrete masonry units that have been tested in conformance with ASTM E 119. Provide certificate of compliance to the Designer of Record (DOR) that the materials and assemblies meet the fire ratings indicated on the drawings.

C101001 1.2.2 Masonry Units Types

C101001 1.2.2.1 Concrete Masonry Units

Units of modular dimensions and air, water or steam cured. Surfaces of units to be plastered or stuccoed shall be sufficiently rough to provide bond and exposed surfaces of units shall be smooth and of uniform texture.

a. Hollow Load-Bearing Units: ASTM C 90, Type I or II, made of lightweight or normal weight aggregate.
b. Hollow Non-Load-Bearing Units: ASTM C 129, Type I or II, made with lightweight or normal weight aggregate.
c. Special Shapes: Provide special shapes as necessary to complete the work.
d. Fire-Rated CMU: Products shall be tested and approved by United Laboratories (UL) according to testing methods described in ASTM E 119, and listed as 2, 3, or 4-hour fire-rated.

C101001 1.2.2.2 Glazed Structural Clay Tile

Provide glazed tile of Grade S, Type I, conforming to ASTM C 126. Tile for fire-rated walls shall have the percent of solid required for that rating.

C101001 1.2.2.3 Pre-Faced Concrete Masonry Units

Provide pre-faced concrete masonry units conforming to ASTM C 744, load-bearing or non-load-bearing, lightweight, Grade N, Type I.

C101001 1.2.2.4 Glass Masonry Units

Provide glass block units made of clear colorless glass with polyvinyl butyl edge coating. Provide all aggregates, horizontal and vertical joint reinforcing, panel anchors, and expansion strip as recommended by the glass block manufacturer.

C101001 1.2.3 Masonry Partition Materials

a. Mortar - Provide ASTM C 270 Type N or S for non-shear-wall interior masonry. For Glass Block use Type S, White Portland cement.
b. Portland Cement - ASTM C 150, Type I, II, or III.
c. Masonry Cement - ASTM C 91, Type N, S, or M.
d. Sand - ASTM C144.
e. Grout - ASTM C 476, Fine aggregate for grouting cells / spaces 3" (75 mm) or less, or coarse aggregate for grouting cells / spaces greater than 3" (75 mm). Provide slump between 8 and 11 inches (200 and 275 mm). Provide minimum grout strength of 2000 PSI in 28 days, as tested per ASTM C 1019.

C101001 1.2.4 Masonry Accessories

a. Horizontal Joint Reinforcement – Fabricate from cold drawn steel wire, ASTM A-82. Wire shall be hot-dipped galvanized after fabrication in accordance with ASTM A 153/ A 153M, Class B-2, 1.5 ounces of zinc per square foot (42.52 g / 0.0929 sq. meter).
b. Anchors and Wall Ties – Provide of stainless steel, ASTM A 167, Type 304, or zinc-coated steel.
c. Reinforcing Bars – ASTM A 615 / A 615M.

C101001 1.3 COLD-FORMED METAL FRAMING

Cold-Formed Metal Framing shall be designed and constructed in accordance with the provisions of UFC 1-200-01 and the International Building Code.

C101001 1.3.1 Studs

Galvanized steel, ASTM A-653, SS Grade 50, G60

C101001 1.3.2 Framing Accessories

Fabricate steel-framing accessories of the same material and finish used for framing members, with minimum yield strength of 33,000 psi (230 Mpa). Accessories include, but are not limited to, the following: bracing, bridging, blocking, web stiffeners, end and foundation clips, gusset plates, stud kickers, knee braces, girts, joist hangers, reinforcing and backer plates.

Provide permanent metal-to-metal contact separation from stud to electrical conduits, plumbing pipes, and other internal wall system components, such as electrical wires.

C101001 1.4 METAL SUPPORT ASSEMBLIES

Provide steel materials for metal support systems with galvanized coating per ASTM A 653, G60; aluminum coating ASTM A 463/ A 463M, T1-25; or a 55% aluminum-zinc coating ASTM A 792.

C101001 1.4.1 Suspended and Furred Ceiling Systems, and Wall Furring

ASTM C 841 (for lath)

ASTM C 645 (for GWB)

C101001 1.4.2 Non-load-Bearing Wall Framing / Furring

Provide ML/SFA MLF (for lath); ASTM C 645, but not thinner than 0.0179 inch (0.4547 mm) thickness. Provide 0.0329 inch (0.8357 mm) minimum thickness for supporting wall hung items such as cabinetwork, equipment, and fixtures and for GWB.

C101001 1.5 ROUGH CARPENTRY

Unless otherwise noted, all rough carpentry shall be concealed from view. All framing and board lumber shall be graded and marked by a recognized association or independent inspection agency. Certification of grade is acceptable in lieu of grade markings. Framing lumber such as studs, plates, caps, bucks, and nailers shall be of the minimum grade for the application in accordance with the grading rules for the local species of framing and board lumber.

C101001 1.5.1 Moisture Content

Air-dry or kiln dry lumber as follows:

a. Framing lumber and boards – 19% maximum
b. Timbers 5" and thicker – 25% maximum

C101001 1.5.2 Fire-retardant Treatment

Comply with AWPA C20 or AWPA C27.

C101001 1.5.3 Preservative Treated Lumber

Preservative treated lumber shall be in accordance with AWPA Standards.

C101001 1.5.4 Structural Lumber

Provide of species and grade as listed in AF and PA 101 that have the following minimum allowable unit stresses: 1050 Fb, 700 Fc with 1,200,000 E (for engineered uses) but not less than required by structural calculations.

C101001 1.5.5 Plywood, Structural

Provide PS-1, PS-2.

a. Plywood (Concealed) - C-D grade, exposure 1 durability classification, span rating of 24/16 or greater.
b. Plywood Shear Walls - Structural I, C-C or C-D grade, and a minimum thickness of 1/2 inch (12.5 mm), but not less than required by structural calculations.

C101002 DEMOUNTABLE PARTITIONS

This paragraph covers unitized/component based demountable walls/partitions and associated work, including tracks and anchoring systems. Requirements and configurations shall be in accordance with the project requirements. Majority of the components and hardware shall be provided by a single manufacturer and on the manufacturer's current GSA pricelist.

C101002 1.1 PERFORMANCE REQUIREMENTS

C101002 1.1.1 Product Construction

Panels and framework shall be unitized/component based (not stick built), and non-progressive. All panel components including frames, glass frames, door frames, base trim, ceiling trim, and tracks shall be cold-formed steel or extruded aluminum and powder coated. Panels shall be a minimum of 2-1/4" thick, and shall have panels available between 6"-48" with 1/16" minimum with nominal widths and filler panels available. Panels shall have no more than a ¼" reveal between adjacent panels or the use of connectors in the same finish of the skin. Panels shall have integrated leveling devices and have a minimum of ½" adjustability at the ceiling and 1" of adjustability at the floor. Walls shall be capable of hanging any manufacturer's systems furniture. Walls must meet seismic requirements when applicable.

C101002 1.1.2 Surface Skin

Wall surfaces to be available including fabric, wood veneer, plastic laminate, painted MDF, glass, Plexiglas, resin, dry erase board, metal, and custom paint, with the option of being be segmented or monolithic. Surfaces shall be interchangeable with the ability to apply a new skin/finish.

C101002 1.1.3 Door Assemblies

Doors shall be a minimum of 1-3/4" thick and available as a hinged or pivot door with the option of being a single or double doors, and with or without glass. All hardware shall be included. Door and Frame assemblies shall be aligned and fitted, and securely anchored to partitions.

C101002 1.1.4 Glazing

Comply with the Federal Safety Standard for Architectural Glazing Materials and shall be factory installed. Options shall include clear, frosted, patterned, custom etched, back painted, and available for use on panels and doors.

C101002 1.1.5 Burning Characteristics and Fire Endurance

The system shall have a Class 'A' (under 25) flame spread rating in conformance with ASTM E 84.

Provide fabric and lining with a flame spread rating of 25 or less, fuel contribution rating of 15 or less, and a smoke generation of 50 or less when tested in accordance with ASTM E 84.

C101002 1.1.6 Field Test

Perform field tests as required in Paragraph C30 1.2 PERFORMANCE VERIFICATION AND FIELD TESTING.

C101002 1.2 WIRE MESH PARTITIONS

Wire mesh partitions shall be complete with all items necessary for a useable and rigid installation. Provide pre-manufactured assemblies with pre-bolted connections. Wire mesh partition doors require a means of locking. Key and cylinder locks are required for partition doors used daily.

C101002 1.2.1 Materials

a. Steel shapes, plates, and bars - ASTM A-36.
b. Cold-formed steel - AISI SG-673.
c. Wire mesh - Provide carbon steel wire with woven diamond mesh and intermediate crimping. Wire shall be 10-gauge mesh for seasonal storage, 6 gage mesh for protection of equipment and tools.

C101003 RETRACTABLE PARTITIONS

This paragraph covers all retractable partitions and associated work, including tracks and anchoring systems. Wall assemblies above retractable partitions shall provide a sound barrier equal to, or greater than, the sound rating of the partition.

C101003 1.1 PERFORMANCE REQUIREMENTS

The retractable partitions below shall meet the following performance requirements.

C101003 1.1.1 Burning Characteristics

The system shall have a Class 'A' (under 25) flame spread rating in conformance with ASTM E 84.

C101003 1.1.2 Fire Endurance

Provide fabric and lining with a flame spread rating of 25 or less, fuel contribution rating of 15 or less, and a smoke generation of 50 or less when tested in accordance with ASTM E 84.

C101003 1.1.3 Acoustical Performance

Sound-rated partition assemblies shall have a minimum Sound Transmission Coefficient (STC) as required by the project program. Construct sound-rated bulkheads above partition assemblies for continuity to the deck above.

C101003 1.1.4 Electrical Requirements

Electrically powered partitions shall be controlled by electrical switches located in the room where the partitions are stored. Electrical outlets shall be tied to the building electrical power system through over-head or end-mount base feeds.

C101003 1.1.5 Door Closure Field Test

Perform field tests as required in Paragraph C30 1.2 PERFORMANCE VERIFICATION AND FIELD TESTING.

C101003 1.2 PARTITION MATERIALS

a. Aluminum Extrusions - ASTM B221, Alloy 3003
b. Steel Sheets - ASTM A 653
c. Fabric Coating - CFFA-W-101-B, Type II

C101003 1.2.1 OPERABLE PANEL PARTITIONS

Operable panel partitions shall be factory finished, supported from an overhead track without floor guides, and complete with hardware, track, and accessories necessary for operation.

a. Suspension System - shall consist of steel or heavy duty extruded aluminum track connected to the structural system by threaded rods, and trolleys designed to support the weight of the partition. Provide steel track of 16 gage minimum, phosphate treated and finished, or zinc or cadmium coated, or provide extruded aluminum track with minimum thickness of 1/8 inch (3.2 mm). Tracks shall have an integral ceiling guard. Trolleys shall have at least two ball bearing nylon or steel tired wheels spaced according to manufacturer's design criteria and four at an end post.

C101003 1.2.2 ACCORDION PARTITIONS

Provide full accordion type partitions, factory finished, supported from overhead track without floor guides, and complete with hardware, track, and accessories necessary for operation.

Suspension System – shall consist of steel or aluminum track and trolleys designed to support the weight of the partition. Provide steel track of 16 gage minimum, phosphate treated and finished, or zinc or cadmium coated, or provide extruded aluminum track with minimum thickness of 1/8 inch (3.2 mm). Tracks shall have an integral ceiling guard. Trolleys shall have at least two ball bearing nylon or steel tired wheels spaced according to manufacturer's design criteria and four at an end post.

C101003 1.2.3 CUBICLE TRACK AND HARDWARE

Provide heavy-duty ceiling surface mounted tracks except in ceiling heights over nine feet, hanger mounted tracks may be used, with stainless steel fasteners. Track bends shall be a minimum of 18 inches radius.

C101003 1.2.3.1 Materials

a. Extruded Aluminum Track - ASTM B 221 and ASTM B 456; alloy 6063-TS, channel shape minimum 1-1/4 inch (32 mm) wide by 1-1/8 inch (29 mm) deep, 0.050 inch (1.27 mm) minimum wall thickness.
b. Carrier Unit - Provide silent type with double canted wheel carrier. Wheels shall have nylon on stainless steel hooks with swivel to support curtain. Provide 2.2 carriers for every foot of track length plus one additional carrier.

C101004 INTERIOR GUARDRAILS & SCREENS

This paragraph covers assemblies to include interior guardrails associated with open sides of floors, but not stairs' handrails. Also included are screens and associated work to include tracks and anchoring systems.

C101004 1.1 MATERIALS

a. Structural Carbon Steel - ASTM A 36/ A 36M
b. Structural Tubing - ASTM A 500
c. Steel Pipe - ASTM A 53, Type E or S, Grade B
d. Aluminum Alloy products - Products shall conform to ASTM B 209 for sheet plate, ASTM B 221 for extrusions, and ASTM B 26/B 26M or ASTM B 108 for castings, as applicable.

C101004 1.2 FABRICATION FINISHES

C101004 1.2.1 Galvanizing

Hot-dip-galvanize steel items to be exposed to water contact. Provide zinc-coated steel in the largest unit possible. Galvanize per ASTM A-123, ASTM A-153, or ASTM A-653, G90, as applicable.

C101004 1.2.2 Non-Ferrous Metal Surfaces

Protect by plating, Class I anodic coatings, or 70% polyvinylidene fluoride organic coatings. See Section C30 for additional coatings/finish information.

C101004 1.3 GUARDRAILS

Design guardrails in accordance with the IBC, except delete the handrail design load reduction for code exceptions for residential, prisons, industrial, high hazard, and storage facilities. Provide materials in accordance with NAAMM PR, and provide the same size rail and post. Provide pipe collars of the same material and finish as the handrail and posts.

C101005 INTERIOR WINDOWS

For fixed interior windows, assemblies include frames, glazing, caulking, and other associated work. For other window types, see PTS Section B20, *Exterior Enclosure*. Glazing for windows specified under this section is located in C101007, "Interior Glazing."

C101005 1.1 ALUMINUM WINDOWS

Each window unit shall be a complete factory assembled unit with or without glass installed. Fabrication of window units shall comply with AAMA 101.

a. Fixed Windows - Type F, LC25 for residential, or HC40 for non-residential (commercial).
b. Sliding Glass Pass Windows - Frames and glass channels shall be of heavy type 6063-TS aluminum extrusions. Provide 1/4-inch (6.35 mm) clear tempered glass.
c. Bullet-Resistant Pass Windows - Conform to UL classification (1 through 8) as required by the installation. Provide fixed, bullet-resistant glazing with pass tray for installations requiring high levels of security.

C101005 1.2 VISION PANELS

a. Wood Windows

Wood windows shall consist of complete units, including sash, glass, frame, and hardware. Window units shall meet the Grade 40 requirements of AAMA 101. Wood members that will receive a transparent finish shall be in one piece, not finger-jointed.

b. Plastic Windows

Provide PVC windows, reinforcing members, welded corners, fasteners, hardware, and anchors conforming to AAMA 101 or ASTM D 4099.

1) Windows shall be fixed or operable, as stated in the project program.

2) Material and Color - Window (PVC) color shall be a consistent color all the way through the material.

c. Hollow Metal Vision Panels – shall meet the requirements of hollow metal frames, paragraph C102001.

C101005 1.3 BULLET RESISTANT WINDOWS

Windows shall meet U.L. Classification, Rating Level 1 through 8, as required for the installation and stated in the project program. Each window shall be a complete factory-assembled unit with glass factory or field installed.

C101005 1.3.1 Glazing

Provide as specified under this section, paragraph entitled "Interior Glazing."

C101005 1.3.2 Setting Materials

Provide types required for the glazing applicable setting method specified in the GANA Glazing Manual. If sealants are employed, use elastomeric sealants, ASTM C 920, Type S or M, Grade NS, Class 12.5, Use NT.

C101005 1.4 FINISHES

Finish exposed aluminum or steel window surfaces as follows:

a. Anodic Coating

Architectural Class I (0.7 mil or thicker), designation AA-M10-C22-A41, clear (natural) or A42, integral color or A44, electrolytically deposited color anodized.

b. Organic Coating

Provide a high-performance coating in accordance with AAMA 2605 with a total dry film thickness not less than 1.2 mils (0.03 mm).

C101006 GLAZED PARTITIONS & STOREFRONTS

This paragraph covers fixed interior glazed partitions, including interior storefronts with doors. Assemblies include frames, glazing, caulking, and other associated work. See Section B20, *Exterior Enclosure*, for aluminum storefront framing components and performance requirements.

C101006 1.1 GLASS

Refer to "Interior Glazing".

C101006 1.2 SETTING AND SEALING MATERIALS

Provide as specified in the *GANA Glazing Manual*, SIGMA TM-3000 and SIGMA TB-3001, and per manufacturers recommendations.

C101007 INTERIOR GLAZING

ASTM C 1036, unless specified otherwise. Provide patterned glass where required to obscure view into bathrooms and dressing rooms.

Provide setting and sealing materials, stops, and gaskets as recommended by the glass or acrylic sheet manufacturer.

Glazing thickness indicated in the following paragraphs is the minimum acceptable thickness. Provide thicker glazing if required by the code or the manufacturer for the given application.

C101007 1.1 GLASS

C101007 1.1.1 Clear Glass

Type I, class I (clear), quality q4 or q5 for patterned glass.

C101007 1.1.2 Wire Glass

Provide glazing of Type II, Class I, Form I, Quality q8 mesh stainless steel, diamond pattern, 1/4 inch (6.35 mm) thick. Glass shall comply with ASTM E 163.

C101007 1.1.3 Patterned Glass

Type II, Class 1 (translucent), Form 3 (patterned), quality q7 (decorative), Finish f2 (patterned two sides), 1/8 inch (3.2 mm).

C101007 1.1.4 Laminated Glass

Fabricate from two pieces of Type I, Class 1, quality q3 glass laminated together with a clear, 0.030 inch (0.75 mm) thick polyvinyl butyral interlayer. Total thickness shall be nominally 1/4 inch (6.35 mm).

C101007 1.1.5 Bullet-Resistant Glass

Provide bullet resistant composite glazing panel listed by UL ABPMED with a power rating corresponding to the installation prescribed, and in accordance with UL 752.

C101007 1.1.6 Tempered Glass

ASTM C 1048, Kind FT (fully tempered), Condition A (uncoated), Type I, Class 1 (clear), quality q3.

C101007 1.2 PLASTIC GLAZING

C101007 1.2.1 Bullet-Resistant Plastic Sheet

Bullet-resistant rating in accordance with UL 752, Class I, clear in color. Only use bullet-resistant plastic sheet on existing interior windows that cannot be removed and replaced.

C101007 1.2.2 Polycarbonate Sheet

ANSI Z97.1, Mar-resistant, Clear and smooth both sides when used for vision glazing; Translucent, textured both sides when used for obscure glazing. Mar-resistant sheet shall have a change in haze of between 5 and 8 percent under silica carbide test, 1600 grams, ASTM D 673.

Provide warranty for polycarbonate sheet glazing for a period of 5-years that includes the following:

a. Warranty Type I, Class A (UV Stabilized) sheets against breakage;
b. Warranty Type III (coated and mar-resistant) sheets against breakage and coating delamination.

c. Warranty Type IV (coated sheet) against breakage and yellowing

C101008 INTERIOR JOINT SEALANT

Sealant joint design and application shall be in accordance with the general requirements of *"Sealants: A Professionals' Guide"* from the Sealant, Waterproofing & Restoration Institute. Refer to manufacturers' recommendations for chemical resistance.

C101008 1.1 JOINT SEALANT TYPES FOR INTERIOR WORK

Sealants shall be paintable, and shall match the color of adjacent surfaces.

a. Vertical Surfaces - ASTM C 920, Type M, Grade NS, Class 25, Use NT.
b. Horizontal Surfaces - ASTM C 920, ASTM D 1190 for traffic surfaces, Type M, Class 25, Use T.
c. Pools and pool decks – for vertical joints, Gun grade: ASTM C 920, Type M, Grade NS, Class 25, NT; for horizontal deck traffic joints pourable: ASTM C 920, Type M, Grade P, Class 25, T
d. Food Service – Use a Vinyl Acetate Homopolymer, or other low VOC, non-toxic sealant approved for use in food preparation areas.
e. Chemical Resistance - Ensure that all sealants are chemically compatible or resistant to adjacent materials, or materials that may come into contact with the sealants in the course of the building life.

C1020 INTERIOR DOORS

Door hardware shall be as specified in "Interior Door Hardware" in this section.

C102001 STANDARD INTERIOR DOORS

This paragraph covers all standard interior wood or hollow metal doors with frames, hardware, locks, and finish.

C102001 1.1 STEEL DOORS

Hardware preparation shall be in accordance with SDI 17, ANSI/DHI A115, and ANSI/SDI 100. Doors shall be hung in accordance with ANSI/SDI 100.

C102001 1.1.1 Standard Steel Doors

ANSI A 250.8, Level 1, (occasional use, low abuse types such as closet doors without locks); Level 2, (low use, moderate abuse types such as office/storeroom doors); Level 3, (moderate use, high abuse types such as BEQ sleeping room doors); Level 4, (high use, high abuse types such as corridors, stairways, assembly spaces, and main entry doors), with a physical performance level of 'A'. Maximum door undercut shall not exceed 3/4 inch (19 mm).

C102001 1.1.2 Sound Insulated Doors and Frames

Provide sound insulated door and frame assemblies into rooms requiring wall assemblies to be sound insulated with a Sound Transmission Class (STC) rating as required. The STC rating for the door and frame assembly shall be not less than the wall assembly STC rating.

C102001 1.1.3 Accessories

a. Shelves for Dutch doors shall comply with SDI 111-B, and be of steel not lighter than 16 gage.
b. Louver shall comply with SDI 111-C, shall be stationary, sight-proof type. Use lightproof louvers if function of room requires darkness. Louver frames shall be 20-gage steel with louver blades minimum 24 gage.

C102001 1.2 STANDARD STEEL FRAMES

ANSI A-250.8: Form frames with welded corners for installation in masonry partitions and knock-down field assembled corners for installation in metal stud and GWB partitions. Frames shall be set in accordance with SDI 105. Form stops and beads with 20 gauge steel.

Provide a minimum of three jamb anchors and base steel anchors per frame, zinc-coated or painted with rust-inhibitive paint, not lighter the 18 gauge. Secure the frames to previously-installed concrete or masonry, with expansion bolts in accordance with SDI 11-F. Provide mortar infill of frames in masonry walls, and gypsum board compound infill at each jamb anchor in metal frame walls.

C102001 1.3 FINISHES

a. Factory-Primed Finish. Doors and frames in non-humid, non-corrosive environments shall be factory primed with a rust inhibitive coating as specified in ANSI A-250.8. Provide factory-prime finish on all six sides of the door.
b. Zinc-Iron Alloy Coating (Galvanealed) and Factory Primed Finish
c. Fabricate interior doors and frames (for installation in such rooms as kitchens, laboratories, battery charging, utility rooms and humid areas such as shower/drying areas, areas with frequent floor mopping, or corrosive chemical atmospheres) from zinc coated steel, alloyed type, complying with ASTM A 653/ A 653M. Factory prime doors and frames as specified in ANSI A-250.8.
d. Manufacturer’s primer shall be compatible with door finish system in C30, Interior Coatings.

C102001 1.4 WOOD DOORS

C102001 1.4.1 Wood Doors and Frames

Install wood doors and frames according to workmanship requirements of the Architectural Woodwork Institute Quality Standard 900-T-4 Custom Grade. Wood door frames may only be used in residential construction.

For non-residential buildings provide extra-heavy doors for stairways, building entrances, corridors, assembly spaces, and other high use interior doors. Provide heavy duty doors for other non-residential locations and for residential buildings.

Wood doors shall be solid wood doors with wood core and solid wood edge bands. Vertical edge bands shall be one piece or laminated two-piece solid lumber to match face veneer species for natural finish wood doors. Reinforce door at all hardware attachments to door with sound grade hardwood. Horizontal edge bands shall be solid wood or structural composite lumber.

a. Stile and Rail Doors - Provide premium or select grade Ponderosa pine, Douglas fir, White Pine, or Yellow Poplar stile and rail doors conforming to WDMA I.S.6A-01. Doors shall be premium grade, heavy duty or as required by the project program.
b. Interior Flush Doors - Flush doors shall conform to WDMA I.S.6A-01. Doors shall be premium grade, heavy duty, or otherwise as required by the project program. Provide WDMA I.S. 1A-04 SCLC-5 structural composite lumber core, or staved lumber core, or PC-5 particleboard core construction. Do not use particleboard cores where it is anticipated that hardware may be screw mounted to the doors. Provide hardwood or softwood veneers cut for the best presentation for natural finishing of doors. Set match veneers of all components of a door opening. Face veneers shall be 1/20" thick before sanding.
c. Closet Doors – Provide flush, paneled, or louvered doors of premium or custom grade, conforming to WDMA I.S.1A-01, premium or custom grade, heavy duty. Doors shall be hinged or sliding.
d. Acoustical Doors and Frames - WDMA I.S 1-A-2004 WDMA I.S.6A-01. Doors shall be premium or custom grade, heavy duty as required by the project program. Provide acoustical doors in solid core, constructed for door, hardware, and frame to provide a Sound Transmission Class (STC) rating of 39 (minimum) when tested in accordance with ASTM E 90.

C102001 1.4.2 Wood Door Accessories

a. Door Louvers - Louver shall comply with SDI 111-C. Louver frames shall be 20-gage steel with louver blades minimum 24 gage.
b. Door Light Openings - Provide glazed openings with the manufacturer's standard wood moldings. Moldings for doors to receive a natural finish shall be of the same species and color of the face veneer.

C102001 1.4.3 Fabrication

a. Marking - Each door shall bear a stamp, brand, or other identifying mark indicating quality and construction of the door.
b. Adhesives and Bonds - WDMA I.S. 1-A. Use Type I (water-proof) adhesive for assembly of interior doors and for the fabrication of stiles, rails, crossbands, and veneers. Adhesive for doors to receive a natural finish shall be non-staining. Type II (water resistant) is allowed for fabrication of core parts.

C102001 1.4.4 Finishes

Unless required otherwise by the project program, typically provide natural finish wood doors. Factory prime and or seal on all six sides of doors.

a. Factory Finish - Provide doors finished at the factory as follows: AWI Quality Standards Section 1500, specification for Conversion varnish, alkyd urea catalyzed polyurethane, or acrylated UV curable epoxy. The coating shall be AWI Quality Standards premium, medium rubbed sheen, with an open or closed grain effect. Poly-wrap the prefinished wood doors at factory for shipping.

b. Field Finish - Prepare doors in accordance with WDMA I.S.1-A-2004. Factory-prime or seal doors. Manufacturer's primer or sealer shall be compatible with door finish system in Section C30, *Interior Finishes*.
c. Plastic Laminate Finish - Factory applied, NEMA LD 3, 0.050 inch (1.27 mm) minimum thickness.

C102002 GLAZED INTERIOR DOORS

This paragraph covers all glazed interior doors with glass, frames, hardware, and locking devices. See paragraph entitled "Interior Glazing" in this section for glazing options.

C102002 1.1 ALUMINUM DOORS, FRAMES AND STOREFRONT

Provide swing-type aluminum doors and frames complete with framing members, transoms, side-lites, and accessories. Fabricate of ASTM B 221, Alloy 6063-TS for extrusions.

C102002 1.2 FABRICATION

C102002 1.2.1 Aluminum Frames

Provide frames with removable glass stops and glazing beads to accommodate fixed glazing. Countersink screws for exposed fastenings. Jointing of framing members shall obtain hairline fit, be reinforced, and mechanically secured.

C102002 1.2.2 Aluminum Doors

Doors shall be not less than 1-3/4 inches (44 mm) thick, with a minimum wall thickness of 0.125 inch (3.2 mm), except beads and trim, 0.050 inch (1.27 mm). Full glazed stile and rail doors shall have medium or wide stiles and rails. Maximum water leakage of the door and frame shall be "no uncontrolled water penetrating systems or appearing on systems' normally exposed interior surfaces from sources other than condensation." Water controlled by flashing and gutters that is drained to exterior and cannot damage adjacent materials or finishes is not considered water leakage.

C102002 1.2.3 Welding and Fastening

Locate welds and fasteners on unexposed surfaces, where possible. Exposed welds shall be dressed smoothly. Exposed fasteners shall have counter-sunk heads. Weld concealed reinforcements for hardware in place. Hardware reinforcements shall be of stainless steel or steel with a hot-dipped galvanized finish, and shall be secured with stainless steel screws.

C102002 1.2.4 Finishes

Provide exposed aluminum surfaces with factory finish of anodic or organic coating. Anodic coatings shall conform to AA 45, with an Architectural Class I finish, 0.7 mil or thicker. Organic coatings shall be a baked enamel finish in accordance with AAMA 2605 with a total dry film thickness not less than 1.2 mils. Exposed fasteners to match the door finish.

C102003 FIRE DOORS

This paragraph covers all interior fire doors, including all necessary frames, hardware, closing devices, and alarms associated with the door.

C102003 1.1 FIRE AND SMOKE DOORS AND FRAMES

Provide in conformance with NFPA 80 an NFPA 105. Fire doors and frames shall bear the label of UL, FM, or WHI attesting to the rating required. Door and frame assemblies shall be tested for conformance per NFPA 252 or UL 10C (for positive pressure). Wood fire doors shall also comply with ASTM E 152.

Provide stainless steel astragals complying with NFPA 80 for fire-rated assemblies and NFPA 105 for smoke control assemblies.

C102004 SLIDING AND FOLDING DOORS

Provide paneled or louvered closet doors of premium or custom grade, conforming to WDMA I.S.6A-01, heavy duty. Doors shall be sliding or bi-folding, as required by the program.

C102005 INTERIOR OVERHEAD DOORS

See the paragraph titled "OVERHEAD AND ROLL-UP DOORS" within PTS Section B20.

C102006 INTERIOR GATES

Any special type gate installed in the interior of a facility, including frames, hardware, hoisting devices, finish, and other associated work.

C102004 CLOSET DOORS

Provide flush doors of premium grade, conforming to WDMA I.S.6A-01, heavy duty. Doors shall be swing-type. See Section C102001 2.1.1 for detailed requirements.

C102007 INTERIOR DOOR HARDWARE

C102007 1.1 DOOR HARDWARE

Provide the services of an Architectural Hardware Consultant (AHC), Certified Door Consultant (CDC), or an Electrified Hardware Consultant (EHC) to assist the Designer of Record in preparation of the door hardware schedule and product selection. The hardware consultant shall sign and seal the door hardware construction submittal. Provide, as far as feasible, locks, hinges, pivots, and closers from one lock, hinge, pivot, or closer manufacturer's make. All door hardware shall be clearly and permanently marked by the manufacturer, on a location to be visible after installation. Modify hardware as necessary to provide features indicated or specified. For necessary hardware items not indicated in these specification sections, provide ANSI/BHMA grade-1 rated hardware.

C102007 1.1.1 Hardware for Fire Doors

All hardware provided shall meet the requirements of NFPA 80 for Fire Doors and NFPA 101 for exit doors. Hardware shall bear the label of Underwriter's Laboratories, Inc., and be listed in UL BMD or labeled and listed by another testing laboratory acceptable to the contracting officer. Comply with NFPA 105 for smoke control assemblies.

C102007 1.1.2 Hinges

BHMA A156.1, Grade 1, 4-1/2 x 4-1/2 inches (108 x 108 mm) with non-removable pin or anti-friction bearing hinges.

C102007 1.1.3 Locks and Latches

For non-residential buildings use Series 1000, Operational Grade 1, Security Grade 2 for stairways, building entrances, corridors, assembly spaces, and other high use interior doors. Use Series 4000, Grade 1 for non-residential locations not using Series 1000 hardware. For residential buildings use Series 4000, Grade 2 for interior doors.

a. Mortise Locks and Latches: BHMA A 156.13, Series 1000, Operation Grade 1, Security Grade 2.
b. Bored Locks and Latches: BHMA A 156.2, Series 4000, Grade 1, or Grade 2.

C102007 1.1.4 Combination Locks

BHMA A 156.2. Heavy-duty, mechanical combination lockset with 5 pushbuttons, standard-sized knob or lever, 3/4-inch (19 mm) deadlocking latch, 2-3/4 inch (70 mm) back-set. Provide deadbolt key override option. Safelock, Simplex, and Venn are acceptable manufacturers. Provide a hardware grade equivalent to Grade 1, series 4000. Provide a 5-year parts and labor warranty.

A door into a sensitive area shall be fitted with a FF-L-2740A X-09 Heavy-duty, combination Electromechanical Deadbolt lock for pedestrian doors, with a drill resistant dial ring mounting plate, 2-3/4 inch (70 mm) back-set, with Automatic Lock Reset, High-Security combination scramble, and resistant to all forms of external manipulation and environmental attack. "KABA-MAS" is the acceptable manufacturer. Three Modes of Operation: 1) The Single Combination Mode allows access by dialing a six-digit combination. 2) The Dual Combination Mode allows access only when two separate codes are entered within 10 seconds of one another. 3) The Supervisory/Subordinate Mode allows access by a subordinate only after a supervisor code has been entered. Audit Feature: Lock shall have a full compliment of auditing features, including non-resettable openings log, and unsuccessful attempts log (audits after 3 unsuccessful attempts) that resets once the proper access code is entered. Lock shall generate its own electrical energy with each turn of the dial, with no batteries or wires required. Lock shall be designed to fit industry standard door mounting pattern.

C102007 1.1.5 Card Key System

Provide card key type access units for specialized entries as required by the program. Provide lithium battery powered, magnetic stripe keycard locksets that are ANSI/BHMA A156.13, Series 1000, Grade 1, mortise or ANSI/BHMA A156.2, Series 4000, Grade 1, cylindrical locks, tamper resistant, UL listed with 1 inch (25 mm) throw deadbolt, 3/4-inch (19 mm) throw latch bolt, auxiliary dead-locking latch, and 2-3/4 inch (68.75 mm) backset. The latch bolt and the dead bolt shall be operated simultaneously by rotating inside lever. Locks with mechanical override lock cylinders are not acceptable. Locks shall be operated only by a correctly encoded keycard. Use of a newly issued keycard automatically re-keys the lock and voids the previous keycard. The lock shall re-lock immediately after outside lever is turned and latch retracted. Locks shall have memory that is capable of recording up to 140 entries into each room, identification of the keycard used to access the room, the date and time of entry. Entry information of the lock shall be retrievable by a data key that can be inserted into the lock and then taken to the front desk printer to display information. Other components that are required for this system at the front desk are a personal or laptop computer, printer and encoder to program each key.

For exit device locks with card key access, provide mortise type, narrow stile exit devices with 24 volt DC, solenoid option for card key exterior access at aluminum storefront doors. Provide mortise type exit devices with 24 volt DC, solenoid option with alarm and remote exterior access for card key access at insulated hollow metal doors. The alarmed exit device shall sound when exiting only.

System shall be capable of accepting a minimum of 12 keycard access levels, security auditing, and computer interfacing with the existing or new management system. Provide a single point of contact customer service representative accessible by telephone with a 10-digit telephone number without additional dialing hierarchies except that a maximum 4-digit extension is permissible. On-site service shall be provided within 3 hours from request within the first 12 months of occupancy. Provide a 5-year parts and labor warranty.

C102007 1.1.6 Exit Devices

BHMA A 156.3, Grade 1. Touch bars shall be provided in lieu of conventional crossbars and arms. Use manufacturer's integral touch bars in aluminum storefront doors.

C102007 1.1.7 Cylinders and Cores

Provide cylinders and cores for new locks, including locks provided under other sections of this specification. Cylinders and cores shall have seven pin tumblers. Cylinders shall be products of one manufacturer, and cores shall be the products of one manufacturer. Rim cylinders, mortise cylinders, and knobs of bored locksets shall have interchangeable cores, which are removable by special control keys. Stamp each interchangeable core with a key control symbol in a concealed place on the core.

C102007 1.1.8 Keying System

Provide a master key system for the facility unless more than one tenant/tenant command shall reside in a facility. Provide a grand master keying system, or great, grand master keying system if multiple tenants or multiple buildings are required. Provide an extension of the existing keying system for existing facility additions. Name the manufacturer of the existing locks, and indicate if they have interchangeable cores. Provide construction interchangeable cores when subcontractors require keys during construction.

The Contractor shall coordinate a keying system meeting. The Contractor's Project Manager, Superintendent, Hardware Subcontractor, Electrical Subcontractor (if keying hardware is electric), Designer of Record, Contracting Officer, Public Works Base Hardware Specialist, and the Using Activity shall attend this meeting to establish the keying system for the project. This meeting is intended to identify base limitations, the necessary security, and access control within the facility. The meeting shall produce a marked up copy of the floor plan indicating the doors to receive locks and the doors to be keyed together, and any master keying or grand master keying

C102007 1.1.9 Keys

Furnish one file key, one duplicate key and one working key for each key exchange and for each master and grand master keying system.

C102007 1.1.10 Key Cabinet and Control System

BHMA A-156.5 Provide key cabinet with 25% more key hooks than required for interior and exterior doors.

C102007 1.1.11 Lock Trim

Provide cast, forged, or heavy-wrought construction, and commercial, plain in design.

a. Knobs and Roses - Knobs and roses shall meet test requirements of BHMA A-156.2 and BHMA A-156.13.
b. Lever Handles - Provide lever handles in lieu of knobs, as required by UFAS and ADAAG. All lever handles shall have the freewheeling feature.

C102007 1.1.12 Door Bolts

BHMA A 156.16. Provide automatic latching flush bolts for double doors with both door leafs active, BHMA A-156.3, Type 25.

C102007 1.1.13 Closers

BHMA A-156.4, Series C02000, Grade 1, with PT 4C, 1-1/2 inch piston, heavy duty forged arm, with full size cover.

C102007 1.1.14 Overhead Holders

BHMA A 156.8, Grade 1.

C102007 1.1.15 Closer Holder-Release Devices

BHMA A 156.15, Grade 1.

C102007 1.1.16 Door Protection Plates

Provide armor, mop, and kick plates conforming to BHMA A-156.6. Provide door kick plates on all doors with closers and doors leading to corridors or circulation spaces. Provide armor plates on all doors that receive cart traffic. Provide mop plates on all doors in rooms that have a mop-able floor finish.

C102007 1.1.17 Door Stops and Silencers

BHMA A-156.16: Type L03011, three per single door and four per double door.

C102007 1.1.18 Thresholds

BHMA A 156.21.

C102007 1.1.19 Door Gasketing

BHMA A 156.22. Use light-proof gasketing for room functions that require darkness and integral sound-proof gasketing on acoustically rated doors.

C102007 1.1.20 Finishes

Provide one of the following hardware finish systems, matching the exterior hardware finish system.

a. BHMA A156.18. Hardware shall have BHMA 630 finish (satin stainless steel), unless specified otherwise. Provide items not manufactured in stainless steel in BHMA 626 finish (satin chromium plated) over brass or bronze, except surface door closers which shall have aluminum paint finish, and except steel hinges which shall have BHMA 652 finish (satin chromium plated). Hinges for exterior doors shall be stainless steel with BHMA 630 finish or chromium plated brass or bronze with BHMA 626 finish. Exit devices may be provided in BHMA 626 finish in lieu of BHMA 630 finish except where BHMA 630 is specified under paragraph entitled "Hardware Sets". Exposed parts of concealed closers shall have a finish to match lock and door trim. Hardware for aluminum doors shall be finished to match the doors.

b. BHMA A156.18. Hardware shall have BHMA 612 finish (satin bronze), unless specified otherwise. Surface door closers shall have bronze paint finish. Steel hinges shall have BHMA 639 finish (satin bronze plated). Exposed parts of concealed closers shall have a finish to match lock and door trim. Hardware for aluminum doors shall be finished to match the doors. Hardware showing on interior of bathrooms, shower rooms, toilet rooms, washrooms, laundry rooms, and kitchens shall have BHMA 629 finish (bright stainless steel) or BHMA 625 finish (bright chromium plated).

C102090 OTHER INTERIOR SPECIALTY DOORS

C102090 1.1 ACCESS DOORS

Provide manufactured access doors and frames of 16-gage steel minimum with concealed pivots or a continuous piano hinge and flush stainless steel cam latch. Finish with manufacturer's standard primer coat finish and paint to match the wall or ceiling unless a stainless steel finish is required in the Project Program. Provide UL Rated access doors in fire rated assemblies. Access panels located in furred wall spaces shall have an inserted material to match adjacent wall surface. Size the access doors large enough to allow convenient hand and tool access and operation of controls and equipment beyond the door. If maintenance of controls or equipment beyond the door requires removal, size the access door to allow removal and reinstallation of new equipment through the access door. Provide access panels capable of receiving finish material inserts in visible wall locations of habitable spaces.

C102091 OTHER INTERIOR PERSONNEL DOORS

Interior personnel doors not described by the assembly categories listed above.

C1030 SPECIALTIES

C103001 COMPARTMENTS, CUBICLES, AND TOILET PARTITIONS

This paragraph covers assemblies for individual compartments, cubicles, toilet partitions, and urinal screens.

C103001 1.1 TOILET PARTITIONS

FS A-A-60003: Provide toilet compartments at multi-fixture toilet rooms of Type I, Style B-Ceiling Hung, C-Overhead Braced, or F-Overhead braced-alcove. Reinforce panels to receive partition-mounted accessories. Steel and Plastic toilet partitions shall have a recovered materials content of 20 to 30 percent.

C103001 1.2 URINAL SCREENS

FS A-A-60003: Type III, Style A, floor supported and wall hung or Style D, wall hung. Wall hung urinal screens shall be secured with continuous flanges to urinal screen and wall.

C103001 1.3 HARDWARE AND FITTINGS

Chrome-plated or stainless steel door latches and coat hooks. Provide one coat hook per compartment door. Latches and hinges for handicapped compartments shall comply with UFAS & ADAAG.

C103001 1.4 FINISHES

Finishes shall comply with FS A-A-60003. Use only one type of partition per building.

a. Metal toilet partitions and urinal screens shall be made of stainless steel.
b. Solid plastic partitions shall be fabricated of polymer resins (polyethylene) formed under high pressure forming a single component section one inch thick. Color shall extend throughout the panel thickness.
c. Phenolic core panels.

d. Laminated plastic partitions are acceptable in low or limited use applications (one or two toilet stalls per toilet room).

C103002 TOILET AND BATH ACCESSORIES

This paragraph covers toilet and bath accessories including, but not limited to, soap dispensers, paper holders, towel receptacles, grab bars, and bathroom mirrors.

C103002 1.1 TOILET AND BATH ACCESSORIES

C103002 1.1.1 Toilet Tissue Dispensers

Provide surface or recessed mounted dispensers fabricated of stainless steel. Provide one horizontally or vertically mounted double-roll dispenser per toilet compartment, unless otherwise indicated.

C103002 1.1.2 Paper Towel Dispensers

Provide one per pair of sinks in toilet rooms without electric hand dryers, and one per room with electric hand dryers, unless otherwise indicated. Provide surface or recessed mounted towel dispenser constructed of a minimum 0.7 mm 0.03 inch Type 304 stainless steel.

C103002 1.1.3 Combination Paper Towel Dispenser / Waste Receptacle

Provide a recessed or semi-recessed type with a capacity of 400 sheets of C-fold, single-fold, or quarter-fold towel and be constructed of 22-gage stainless steel. Provide one per pair of sinks, unless otherwise indicated. Provide the towel compartment door with a tumbler key lock locking mechanism.

C103002 1.1.4 Sanitary Napkin Disposal Units

Units shall be toilet partition or wall mounted of not less than 22 gage stainless steel, with top and bottom hinged access doors. Provide one in each Woman's toilet stall, unless otherwise indicated. Each unit shall have leak-proof receptacle for disposable liners. Provide fifty disposable liners of the type standard with the manufacturer.

C103002 1.1.5 Medicine Cabinets

Provide units with plate or float glass mirrors on doors. Provide doors and frames of 16-gage steel with a continuous piano hinge and flush magnetic latch.

C103002 1.1.6 Towel Bars

Provide stainless steel towel bars with a minimum thickness of 0.015 inch (0.4 mm).

C103002 1.1.7 Grab Bars

Provide stainless steel grab bars per UFAS and ADAAG.

C103002 1.1.8 Robe Hooks

Provide stainless steel two-hook shape with integral wall flange, with a projection not less than 1-5/8 inches (41 mm).

C103002 1.1.9 Mirrors

Provide one manufactured framed electro-copper plated mirror per sink, or one full-size mirror for all sinks, unless otherwise indicated.

C103002 1.1.10 Soap Dispensers

Provide one soap dispenser per two sinks, with mechanical action dispensing valve. Do not mount soap dispenser on mirror. Surface mounted liquid type shall consist of a vertical Type 304 stainless steel tank with holding capacity of 1.2L (40 fluid ounces) with a corrosion-resistant all-purpose valve.

C103002 1.1.11 Electric Hand Dryer

Provide wall mount and electric hand dryer designed to operate at 110/125 volts, 60 cycles, single phase alternating current with a heating element core rating of a maximum 2100 watts. Provide dryer housing of single piece construction and of chrome plated steel. Provide one unit per three sinks, unless otherwise indicated.

C103003 MARKER BOARDS AND TACK BOARDS

This paragraph covers all marker boards, tack boards, and fastening devices.

C103003 1.1 MATERIALS

a. Porcelain Enamel - Marker board writing surface shall be composed of porcelain enamel fused to a nominal 28 gage thick steel sheet, laminated to a 1/4-inch (6.35 mm) thick core material with a steel or foil backing sheet.
b. Cork shall be a continuous resilient sheet made from soft, clean, granulated cork, relatively free from hardback and dust and bonded with a binder suitable for the intended purpose. The cork sheet shall have a tensile strength of not less than 40 PSI (275.8 kPa) when tested in accordance with ASTM F 152.
c. Tack-board Covers - Provide woven fabric or vinyl wall covering over cork tack surface.
d. Aluminum - Aluminum frame extrusions shall be alloy 6063-T5 or 6063-T6, shall conform to ASTM B 221, and be a minimum of 0.06 inches (1.5 mm) thick.
e. Hardwood - Exposed hardwood for frames, cabinets, and cases shall be oak, walnut, or mahogany, with a factory applied stain and lacquer finish.
f. Glass - Provide tempered glass in accordance with ANSI Z97.1 and in conformance with ASTM C 1048.

C103003 1.2 PRESENTATION BOARD

The presentation board shall be a laminate covered wall-hung cabinet with lockable doors. Doors are to be attached to the cabinet with continuous piano hinges, and have a catch or closure to keep doors closed when not in use. The interior of the cabinet shall contain a porcelain enamel marker board writing surface with chalk-tray, a flip chart that can be hung on an interior door panel, and fabric covered tack surface on the interior door panels.

a. Marker Board - Marker board shall be a factory assembled, one-piece unit, and have a 28 gauge nominal steel porcelain enamel writing surface and a chalk-tray with end closure. Frame shall be aluminum, powder-coated steel, oak, walnut, or mahogany.

b. Tack Board - Tack boards shall consist of a minimum 1/4-inch (6.35 mm) thick natural cork laminated to a minimum 1/4-inch (6.35 mm) thick hardboard, shall have an oak or aluminum frame, and be vinyl or fabric covered. Covers shall have a Class 'A' flame spread rating of 0-50, and a smoke developed rating of 0-450 in accordance with ASTM E 84.

C103004 IDENTIFYING DEVICES

This paragraph covers all signs, plaques, and traffic markers.

C103004 1.1 ASSEMBLIES

The signage system assemblies shall consist of three primary elements; a structural rail (with coordinating rail joiners to increase sign height in the field), removable copy inserts, and interlocking end caps or frame, and trim.

C103004 1.1.1 Inserts

The signage rails shall be designed as to accept ABS plastic signage inserts.

C103004 1.1.1.1 Insert Fabrication

The insert is the signage member to which message signage copy in the form of letters, numbers, and symbols shall be applied, and shall be interchangeable with similar sized rails of any other sign of equal or greater width and height. The ends of the rail and insert assembly shall be enclosed by end caps of prefinished 6064T5 extruded aluminum. Inserts shall be fabricated from 0.090 minimum ultra-violet resistant thickness extruded ABS Acrylic sheet core with 20.003 polycarbonate non-glare clear cap bonded to the core during the extrusion texturing process.

C103004 1.1.2 End Caps

End caps shall be injection-molded ABS plastic with integral color. The end caps shall be interchangeable to either end of each sign type, and any other similar sign of equal height. The end caps shall be interlocking mechanically with the inserts, and rail, requiring no tools for assembly. End caps shall utilize straight corners (instead of radius corners). Spring clips shall be steel. Plastic spring clips are not acceptable.

C103004 1.1.3 Trim

Optional accessory top and bottom trim frames of prefinished (color as indicated 6063T5 extruded aluminum shall be provided to the signage types indicated.

C103004 1.1.4 Mounting

Mounting of the modular signage system shall include surface mounting with screw-on applications for interior and exterior walls and on selected doors as indicated, at the locations indicated, and other mounting devices as indicated.

C103004 1.1.5 Graphics Application

a. Tactile Letters and Symbols: Chemically-weld tactile letters and symbols to front surface of signage inserts where indicated and where required by UFAS and ADAAG. Tactile letters and symbols shall be sized as indicated.
b. Braille: Grade-II Braille. Provide Grad II Braille inlaid strip as indicated to match sign color.

C103004 1.2 ALUMINUM ALLOY PRODUCTS

Provide ASTM B 209 for aluminum sheet or plate, ASTM B 221 for aluminum extrusions and ASTM B 26/B 26M or ASTM B 108 for aluminum castings. Provide aluminum extrusions at least 1/8-inch (3.2 mm) thick and aluminum plate or sheet at least 16-gage thick. Provide aluminum castings of solid aluminum cast certified by AA 46 alloy designation B443.0. Where anodic coatings are specified, alloy shall conform to Aluminum Association's alloy designation 514.0 or A514.0.

C103004 1.2.1 Aluminum Finishes

Provide exposed aluminum finishes with either mill finish, factory finished with anodic coating or organic coating. Anodized finishes shall conform to AA 45, Architectural Class I or II, with a coating thickness 0.7 mil or thicker. Organic coatings shall be a baked enamel finish with a dry film thickness not less than 1.2 mils, conforming to AAMA 605.2.

C103004 1.3 STEEL PRODUCTS

Provide ASTM A-36 for structural steel, ASTM A-167 for sheet and plates.

C103004 1.4 CAST METAL

a. Cast Aluminum, ASTM B 108
b. Cast Bronze, ASTM B 62

C103004 1.5 GLASS

ASTM C 1036, Type 1, Class 1, Quality q3

C103004 1.6 FIBER-REINFORCED POLYESTER (FRP)

ASTM D 3841, Type II, Grade 1

C103004 1.7 ACRYLIC SHEET

ASTM D 4802, Type III

C103004 1.8 POLYCARBONATE SHEET

SAE AMS 3611

C103004 1.9 EXTERIOR POST AND PANEL SIGNS

C103004 1.9.1 Posts and Panels

Provide one-piece extruded aluminum posts with not less than 0.125 inch (3.2 mm) wall thickness. Posts shall permit attachment of panel framing system. Provide cap for each post. Panel framing system shall consist of aluminum extrusions and interlocking track components designed to interlock with concealed fasteners. Panels shall be fabricated of rectangular extruded tubular aluminum with

a minimum wall thickness of 0.125 inches. Panels shall be removable and interchangeable. Posts shall be embedded in solid concrete foundation. All exterior signage shall conform to the Base BEAP.

C103004 1.9.2 Illumination

Provide concealed lighting within panel framing members. Provide T-12 slim-line lamps. Ballast shall be integrally mounted with high power factor and rated for use in up to minus 20 degrees F (minus 29 degrees C) ambient starting temperature.

C103005 LOCKERS

C103005 1.1 STEEL CLOTHING LOCKERS

C103005 1.1.1 FS AA-L-00486 (Rev J), enameled steel

Provide ventilated, Single Tier Units (unless multi-tier permitted by Project Program), fully framed. Provide galvanized or galvaneal shelves and bottoms for all lockers, and fully galvanized or galvaneal lockers in locker spaces adjoining shower rooms. Provide full height door stiffeners.

C103006 SHELVING

Assemblies include all types of shelving with brackets and all supporting materials and finish, if required.

C103007 FIRE EXTINGUISHER CABINETS

Cabinet shall be constructed of 16 gauge cold-rolled steel door panel / front, and a 22 gauge cold-rolled steel tub. Cabinet shall be fire-rated if located in a fire rated wall assembly, and have a full-length piano hinge, and baked enamel finish. Provide a stainless steel cabinet door if cabinet is exposed to the environment. Size and locate fire extinguisher cabinets to encase extinguisher as required by NFPA 10 & 101. Cabinet shall be semi-recessed in new construction and surface mounted in new mechanical/electrical spaces.

C103008 COUNTERS

C103008 1.1 LAMINATE COVERED COUNTER TOPS

Fabricate with lumber and a core of exterior grade plywood (A-C Grade) or particleboard (ANSI A208.1, Grade 1-M-2 or better), glued and screwed to form an integral unit. Bond laminated plastic under pressure to exposed surfaces using manufacturer’s recommended glue.

a. Countertops shall be constructed to meet "Custom" quality grade as defined in AWI Quality Standards.
b. Finish shall meet NEMA LD 3, Grade PF 42 for plastic laminate.

C103008 1.2 ACRYLIC COUNTER TOPS

Provide 100% acrylic counter tops for use in non-residential construction.

Solid surfacing material shall consist of 100% pure acrylic polymer,

mineral fillers, and pigments. The material shall be homogenous, not coated or laminated. Superficial damage to a depth of 0.010 inch (.254 mm) shall be repairable by sanding or polishing. Install with factory recommended fasteners/adhesives/sealant. Provide the following performance characteristics:

a. Tensile strength, ASTM D 638: 5800 psi minimum
b. Hardness, ASTM D 2583: Barcol Impressor 55 minimum
c. Flammability, ASTM E 84: Class I/A, flame spread 25 maximum; smoke developed 30 maximum
d. Thermal Expansion, ASTM D 696:.00002 in/in/F maximum
e. Boiling water resistance, NEMA LD 3: No effect
f. High temperature resistance, NEMA LD 3: No effect
g. Liquid absorption, ASTM D 570 (24 hours): 0.10 percent maximum
h. Mold and mildew growth, ASTM G 21: No growth, no effect
i. Bacteria growth, ASTM G 22: No growth, no effect
j. Sanitation, NSF 51: "Food Contact" approval for food area applications
k. Impact resistance, NEMA LD 3 (1/2 lb. ball drop): 1/4 inch material, 36 inch drop, no failure 1/2 inch material, 120 inch drop, no failure

C103009 CABINETS

This paragraph includes casework items that are permanently fixed in-place. Included are all cabinetry and millwork items with their associated accessories and anchoring devices.

C103009 1.1 WALL AND BASE CABINETS

Wall and base cabinets shall be of the same construction and appearance, with solid ends and frame fronts, or with frames all around. Frames shall be not less than 3/4 inch by 1 1/2 inches (19 mm by 38 mm) hardwood. All ends, bottoms, backs, and partitions shall be hardwood plywood. Cabinet doors and drawer fronts shall be a minimum 3/4 inch (19 mm) of either plywood or medium density fiberboard cores with solid edge bands. Construction of cabintes shall be mortise and tenon, dovetail, or dowel and glue joints. Edges of exposed plywood shall be covered with hardwood strips.

C103009 1.1.1 Quality Standards

Wall and base cabinets shall be constructed to meet "Custom" quality grade as defined in AWI Quality Standards, except where this specification exceeds AWI Custom.

C103009 1.1.2 Hardware

Provide cabinet hardware including two self-closing hinges for each door and two side-mounted metal drawer slides for each drawer and pulls for all doors and drawers as follows. All cabinet hardware exposed to view shall be ANSI/BHMA 156.9, Grade 1, and comply with the following requirements:

a. Concealed Euro-Style, back mounted hinges with opening to 165 degrees and a self-closing feature at less than 90 degrees.
b. Drawer slides shall have a static rating capacity of 100 lbs. (444 N).
c. Provide adjustable shelving standards with shelf support hardware for wall cabinets.

d. Provide heavy-duty magnetic latch and door and drawer catch.

C103009 1.1.3 Finish

Provide plastic laminate (NEMA LD3) or transparent finish with sealer and varnish as selected by Designer of Record.

C103010 CASEWORK

This paragraph includes all built-in premanufactured metal cabinetry for specialized functions such as labs, libraries, medical and dental facilities. At a minimum, all casework shall conform to the following chart:

Metals	Thickness and Material
Uprights (all)	
Horizontal foot	4" x 2" tube, 14 gauge (.075") HRPO Steel
Vertical upright	6" x 2" tube, 11 gauge (.118") HRPO Steel
Leveler	Threaded steel with plastic foot and rubber boot
Bridge Channels	
Channel (halves)	14 gauge (.075") CQCR Steel
Utility Rails	
Top and Bottom Channels	18 gauge (.047") CQCR Steel
Covers	18 gauge (.047") CQCR Steel
Dividers	16 gauge (.059") CQCR Steel
End Brackets	22 gauge (.030") CQCR Steel
Top Stretchers	
Channel	14 gauge (.075") CQCR Steel
End Brackets	18 gauge (.047") CQCR Steel
Vertical Utility Chase	
Chase Assembly	
Upper Chase Cover	
Cover	16 gauge (.059") CQCR Steel
Middle Chase Cover	
Cover	16 gauge (.059") CQCR Steel
Lower Chase Cover	
Cover	16 gauge (.059") CQCR Steel
Attachment Bracket	11 gauge (.118") CQCR Steel

Chase Cover	
Panel	18 gauge (.047") CQCR Steel
Bridge Cover Extension	
Panel	18 gauge (.047") CQCR Steel
Chase Cabinet Filler	
Panel	18 gauge (.047") CQCR Steel
Cantilever	
Cantilever	11 gauge (.118") HRPO Steel
End Panel	
Outer Cover	11 gauge (.118") HRPO Steel
Inner Cover	20 gauge (.036") CQCR Steel
Angle Bracket	16 gauge (.059") CQCR Steel
Shelves	
Shelf (all)	16 gauge (.059") CQCR Steel
End Panels (all)	14 gauge (.075") CQCR Steel
Reinforcement Channel (Flat and Seismic Flat Shelves)	16 gauge (.059") CQCR Steel
Seismic Shelf Support Lip	20 gauge (.036") CQCR Steel
Laminate Overhead Storage Cabinets	
Hanger bracket	14 gauge (.075") CQCR Steel
Solid door pull	Steel, aluminum or zinc
Glass door pull	Steel
Glass door track	Aluminum
Reinforcing hat channel for shelf	11 gauge (.118") HRPO Steel
Steel Overhead Storage Cabinets	
Sides, Back and Door	20 gauge (.036") CQCR Steel
Top, Bottom and Shelf	18 gauge (.047") CQCR Steel
Hanger bracket	14 gauge (.075") CQCR Steel
Solid door pull	Steel, aluminum or zinc
Glass door pull	Steel
Glass door track	Aluminum
Reinforcing hat channel for shelf	11 gauge (.118") HRPO Steel

Laminate Storage and Sink Cabinets	
Drawer glides	Steel rails with ball bearings
Door hinges	Steel
Door and Drawer pulls	Steel, aluminum or zinc
Leveler bracket	11 gauge (.118") HRPO Steel
Leveler	Threaded steel with plastic foot and rubber boot
Reinforcing hat channel for shelf	11 gauge (.118") HRPO Steel
Steel Storage and Sink Cabinets	
Sides, Back and Top	20 gauge (.036") CQCR Steel
Base, Bottom and Shelf	18 gauge (.047") CQCR Steel
Door (interior and exterior panels)	20 gauge (.036") CQCR Steel
Drawer glides	Steel rails with ball bearings
Door hinges	Steel
Door and Drawer pulls	Steel, aluminum or zinc
Leveler bracket	11 gauge (.118") HRPO Steel
Leveler	Threaded steel with plastic foot and rubber boot
Reinforcing hat channel for shelf	11 gauge (.118") HRPO Steel
Cord Reel	
Cord Reel	11 gauge (.118") HRPO Steel
Cable Storage Tray	
Tray	24 gauge (.024") CQCR Steel
Phenolic Drying Rack	
Mounting brackets, in-line	14 gauge (.075") CQCR Steel
Mounting brackets, end-of-bench	14 gauge (.075") CQCR Steel
Modular Power Block with GFCI Receptacle	
Housing and back bracket	16 gauge (.059") CQCR Steel
Modular Connector Faceplates	
Faceplate	16 gauge (.059") CQCR Steel
Non-Metals	Thickness and Material

Laminate Worksurfaces	
Work surface core	1.12" X 45 lb/cu ft medium density particle board
Top and bottom laminate (standard)	.012" thick laminate
Front edge banding	3 mm thick rigid plastic
Side and back edge banding	1 mm thick, flat profile rigid plastic
ChemsurfÂ Chemical-Resistant Laminate Worksurfaces	
Work surface core	1.12" X 45 lb/cu ft medium density particle board
ChemsurfÂ® (option)	VGP grade, resin-impregnated kraft paper
Front edge banding	3 mm thick rigid plastic
Side and back edge banding	1 mm thick, flat profile rigid plastic
Phenolic Resin Worksurfaces	
Work surface core	.75" thick, phenolic resin-impregnated kraft paper
Phenolic Drying Rack	
Panel	1.00" thick, phenolic resin-impregnated kraft paper
Pegs	.38" diameter x 5" long polypropylene pegs
Phenolic Drip Trough	
Trough	1.00" thick, phenolic resin-impregnated kraft paper
Drain tube	.50" OD rigid phenolic tube
Drain flexible tube	.50" OD x 3' long flexible clear PVC tubing
Laminate Overhead Storage Cabinets	
Panel core (Top, Bottom, Ends, Back, Door, Shelf)	.75" X 45 lb/cu ft industrial grade particle board
Laminate	.012" thick laminate
Cabinet edge banding	1 mm thick, flat profile rigid plastic
Door edge banding	2 mm thick, flat profile rigid plastic

Glass door	.25" thick tempered safety glass
Steel Overhead Storage Cabinets	
Glass door	.25" thick tempered safety glass
Laminate Storage and Sink Cabinets	
Panel core (Top, Bottom, Base, Ends, Back, Door, and Shelf)	.75" X 45 lb/cu ft industrial grade particle board
Laminate	.012" thick laminate
Cabinet edge banding	1 mm thick, flat profile rigid plastic
Drawer/Door edge banding	2 mm thick, flat profile rigid plastic
Drawer/Door stop	Rubber
Steel Storage and Sink Cabinets	
Drawer/Door stop	Rubber
Power Block	
Housing	Ultramid Nylon
Harness-to-Harness Connector	
Housing	Ultramid Nylon
Duplex Receptacles	
Housing	Ultramid Nylon
Modular Harnesses and Multipurpose Power Infeeds	
Connector housing	Ultramid Nylon
Wire Manager	
Channel	Rigid plastic

C103011 CLOSETS

This paragraph includes all built-in closets with associated work and finishes.

C103012 FIRESTOPPING PENETRATIONS

This paragraph covers fire-stopping assemblies to include sleeves, caulking, and flashing. See PTS Section D40, *Fire Protection*, for additional requirements.

C103012 1.1 FIRESTOPPING

Provide asbestos-free firestopping material capable of maintaining an effective barrier against flame, gases, and temperature. Provide non-combustible firestopping that is non-toxic to human beings during installation or during fire conditions. Devices and equipment for firestopping service shall be UL FRD listed or FM P7825 approved for use with applicable construction, and penetrating items.

C103012 1.1.1 Fire Hazard Classification

Material shall have a flame-spread of 25 or less, a smoke developed rating of 50 or less when tested in accordance with UL 723 or UL listed and accepted.

C103012 1.1.2 Firestopping Rating

Firestopping materials shall be UL FRD listed or FM P7825 approved for "F" and "T" ratings at least equal to the fire-rating of the fire wall in which penetrated openings are to be protected.

C103013 SPRAYED FIRE-RESISTIVE MATERIALS

See PTS Section D40, *Fire Protection*, for additional requirements.

C103013 1.1 SPRAYED FIRE-RESISTIVE MATERIALS

C103013 1.1.1 Quality Assurance

A pre-installation conference shall be held with the manufacturer’s approved installer prior to the application of the sprayed fire-resistive materials. See Paragraph C10 1.2 for field testing requirements for the fire-resistive material. Products provided shall not contain asbestos per 40 CFR 763.

C103013 1.1.2 Warranty

Contractor shall provide manufacturer's standard materials and workmanship warranty stating that the manufacturer agrees to repair or replace materials that fail within 2 years, or as required by the project program, from date of Substantial Completion.

C103013 1.1.3 Material Composition

Provide sprayed fire-resistive material consisting of factory-mixed, dry formulation of gypsum or Portland cement binders and light-weight mineral or synthetic aggregates mixed with water at the Project site, or provide sprayed-fiber fire-resistive material consisting of factory-mixed, dry formulation of inorganic binders, mineral fibers, fillers, and additives conveyed in a dry state by pneumatic equipment and mixed with water at a spray nozzle to form a damp, as-applied product.

C103013 1.1.4 Physical Properties

a. Dry Density: 15 lb/cubic foot (240 kg/cubic meter) for referenced fire-resistance design to attain the ratings indicated, per ASTM E 605.
b. Thickness: Provide minimum average thickness required for fire-resistance design indicated according to the following criteria, but not less than 0.375 inch (9 mm), per ASTM E 605:

1) Where the referenced fire-resistance-design lists a thickness of 1 inch (25 mm) or greater, the minimum allowable individual thickness of sprayed fire-resistive material is the design thickness minus 0.25 inch (6 mm).

2) Where the referenced fire-resistance design lists a thickness of less than 1 inch (25 mm) but more than 0.375 inch (9 mm), the minimum allowable individual thickness of sprayed fire-resistive material is the greater of 0.375 inch (9 mm) or 75 percent of the design thickness.

3) No reduction in design thickness is permitted for those fire-resistance designs whose fire-resistance ratings were established at densities of less than 15 lb/cubic foot (240 kg/cubic meter).

c. Bond Strength: 150 lb/sq. ft. (7.2 kPa) minimum per ASTM E 736.
d. Compressive Strength: 5.21 lb/sq. in. (35.9 kPa) as determined per ASTM E 761. Minimum thickness of sprayed fire-resistive material tested shall be 0.75 inch (19 mm) and minimum dry density shall be as specified, but not less than 15 lb/cubic foot (240 kg/cubic meter).
e. Corrosion Resistance: No evidence of corrosion per ASTM E 937.
f. Deflection: No cracking, spalling, or delaminating per ASTM E 759.
g. Effect of Impact on Bonding: No cracking, spalling, or delaminating per ASTM E 759.
h. Air Erosion: Maximum weight loss of 0.025 g/sq. foot (0.270 g/sq. meter) in 24 hours per ASTM E 859.
i. Fire-Test-Response Characteristics: Provide sprayed fire-resistive materials with the following surface-burning characteristics per ASTM E 84 by United Laboratories: flame-spread index of 10 or less and a smoke developed index of 0.
j. Fungal Resistance: No observed growth on specimens per ASTM G 21.

C103014 ENTRANCE FLOOR GRILLES AND MATS

Provide entrance mats at all entrances to the facility. Provide recessed entrance mats at building entrances with enclosed vestibule and or surface applied entranceway mats or entranceway floor tiles at all other entrances. Entranceway mats and entranceway floor tile require the use of a transition edge where he mat adjoins other floor materials. Mat system shall meet ASTM D-2047 coefficient of friction requirements for dry and wet surfaces. All portions of mat system shall comply with ASTM E 648, Class I for flammability and ASTM E 662 for smoke development of 450. Fasteners shall be non-corrosive screws and anchors for securing frames together to floors. Provide continuous vinyl bottom cushion to quiet clatter at recessed entrance mat systems. Hinges shall be flexible aluminum or thermoplastic hinge retained in aluminum tread port, and allow debris and moisture to flow through recessed mat. Provide ball and socket hinge for easy roll-up of recessed mat inserts for cleaning. Recessed entrance mat systems shall use either an aluminum or thermoplastic framework and shall have replaceable wearing surface inserts. Provide inserts as follows:

a. Carpet Inserts - Carpet insert fiber shall be colorfast, solution dyed, anti-static, anti-microbial, and waterproof. Fiber shall be 100% nylon or polypropylene. Each carpet fiber shall be bonded to rigid ply backing to prevent fraying and supplied in continuous splice-free lengths. Carpet shall be a minimum of 30-oz. / square yd.

b. Vinyl or Rubber Inserts - Vinyl or rubber inserts shall be removable and be made from recycled materials wherever possible. Inserts shall have serrated edges for scraping purposed or flexible abrasive grit tape, bonded to a rigid vinyl tread insert.

C103014 1.1 RECESSED MAT THERMOPLASTIC FRAME PROPERTIES

Thermoplastic frame shall be colorfast and UV-resistant. Tensile strength of frame shall comply with ASTM D 638. Tensile impact of frame shall comply with ASTM D 1822. Flexural strength of frame shall comply with ASTM D 790. Shore D hardness of frame shall comply with ASTM D 2240. Rockwell R hardness of frame shall comply with ASTM D 785. Coefficient of thermal expansion of frame shall comply with ASTM D 696.

C103014 1.2 RECESSED MAT ALUMINUM FRAME REQUIREMENTS

Aluminum frame and rail shall comply with ASTM B 221, alloy 6063-T5. Frame shall have butted corners and be factory coated with zinc chromate or manufacturer's standard protective finish where surfaces are in contact with concrete. Provide standard mill finish, color anodized finish complying with AAMA 606.1, clear anodized finish complying with AAMA 607.1, or bronze complying with ASTM B455, alloy 385.

C103014 1.3 SURFACE MOUNTED/LOOSE-LAY ENTRANCE MATS

Loose-lay mats shall have beveled vinyl or rubber transition edge and shall have surface of carpet or vinyl/rubber surfaces. Edges shall conform to ADA accessibility guideline 4.5.2, for loose-lay surface applications. Mats shall be easily removed yet remain adhered to floor to prevent mat from moving as pressure from walking is applied. Do not use carpet inserts unless directed otherwise.

C103014 1.4 SURFACE APPLIED ENTRANCEWAY FLOOR TILE

Applied entranceway floor tiles shall be in the form of carpet tiles, carpet tiles with vinyl or rubber scrubbing surfaces, or tiles of thermoplastic scrubbing surfaces only. Tiles shall be installed in areas where permanent mat is required but slab is not recessed to receive permanent recess mat. Tiles shall be securely installed without obvious seams, cleanable, dimensionally stable, and with maximum finished tile thickness of 1/2" above finished floor line. Carpet fibers shall 100% nylon or polypropylene, anti-static, anti-microbial, colorfast, solution dyed, mold and mildew resistant, and waterproof with minimum face weight of 30 oz / square yd. Thermoplastic only tiles shall be PVC free and UV-resistant.

C103015 ORNAMENTAL METALWORK

Building components made from ornamental metals. Ornamental stair handrails are included in B1010 EXTERIOR STAIRS and PTS C20, *Stairs*.

C103090 OTHER INTERIOR SPECIALTIES

This paragraph covers other interior specialties not described by other assembly categories listed previously.

C103090 1.1 PROJECTION SCREEN

Motorized projection screen shall be wall, ceiling, or above ceiling mounting, and shall have a 120V motor that is lubricated for life, quick reversal type, has overload protector, integral gears, and preset accessible limit switches. Screen shall be flame retardant, mildew resistant and have black masked borders. Controls shall be wall mounted with wiring concealed within the wall construction. Pull-down projection screens shall be provided in lieu of motorized projection screens as approved by the Activity, as specified in the project program.

C103090 1.2 OTHER INTERIOR SPECIALTIES

Also see PTS Sections C20 and C30 for additional interior specialties not specified here.

-- End of Section --

SECTION C20

STAIRS
4/08

C20 GENERAL

C20 1.1 DESIGN GUIDANCE

Provide the design and installation in accordance with the following references. This Performance Technical Specification (PTS) adds clarification to the fundamental requirements contained in the following Government Standards. The general requirements of this PTS section are located in PTS Section Z10, *General Performance Technical Specification*.

Industry standards, codes, and government standards that are referenced in the section text that are not found in the Unified Master Reference List (UMRL) in the Construction Criteria Base (CCB) at the Whole Building Design Guide Website , are listed below for basic designation identification. Comply with the required and advisory portions of the current edition of the standard at the time of contract award.

C20 1.1.1 Industry Standards and Codes

AISC American Institute of Steel Construction

C20 1.1.2 Government Standards

UNIFIED FACILITIES CRITERIA (UFC)

UFC 03-100-10N, *Architecture*

UNIFIED FACILITIES GUIDE SPECIFICATIONS (UFGS)

C20 1.2 PERFORMANCE VERIFICATION AND ACCEPTANCE TESTING

Verification of satisfactory stair performance shall be via Performance Verification Testing, as detailed in this section of the RFP.

C20 1.2.1 Field Testing for Concrete

Field Quality Control Test Reports to be submitted to DOR shall comply with ACI 301. If concrete is found to be below the strength required in the tests, Contractor shall remove and replace that concrete and all associated building components at his own expense.

C20 1.3 DESIGN SUBMITTALS

Design Submittals shall be in accordance with Z10, *General Performance Technical Specifications*, UFGS section 01 33 10.05 20, *Design Submittal Procedures*, UFC 1-300-09N, *Design Procedures* and UFC 3-100-10N, *Architecture*.

C20 1.4 CONSTRUCTION SUBMITTALS

Submit construction submittals in accordance with PTS Section Z10, *General Performance Technical Specification*. In addition to the Z10 requirements the Designer of Record (DOR) shall approve the following construction submittals as a minimum:

Stairs, handrails

C2010 STAIR CONSTRUCTION

C201001 INTERIOR AND EXTERIOR STAIRS

Provide primed and painted steel stairs with concrete filled pans or cast-in-place concrete stairs for industrial and commercial construction. Design load shall not be less than 100 PSF (4.8 kPa) for live load, and 300 pounds (136 kg) for concentrated loads. Required means of egress stairs shall conform to NFPA 101. Provide steel guard and handrails.

C201001 1.1 STEEL STAIRS

Design shall conform to AISC S335 or AISC S342L.

C201001 1.1.1 Materials

a. Structural Carbon Steel - ASTM A 36/A 36M
b. Structural Tubing - ASTM A 500
c. Steel Pipe - ASTM A 47
d. Gratings - Gray cast iron ASTM A-48, Class 40
e. Metal plank grating, non-slip requirement, FS RR-G-1602 aluminum ASTM B 209, 6061-T6; steel ASTM A-653, G90.
f. Floor Plates, Patterned - ASTM A 786/A 786M, 14 gage.
g. Anchor Bolts - ASTM A 307
h. Galvanized Structural Steel - All steel exposed to the environment or direct water contact shall be galvanized in accordance with ASTM A 123, ASTM A153, and ASTM A653, Z275 (G90) coating. Galvanize all components after fabrication in accordance with ASTM A385. Fabricate all steel components in the largest units practical using bolted connections for field assembly. Repair damage to, or voids in, galvanizing in accordance with ASTM A780 Annex A1 or Annex A3.

C201001 1.2 ALUMINUM ALLOY PRODUCTS

Conform to ASTM B 209 for sheet plate, ASTM B 221 for extrusions and ASTM B 26/B 26M or ASTM B 108 for castings. Aluminum extrusions shall be at least 1/8-inch (3.2 mm) thick and aluminum plate or sheet at least 0.050 inch (1.27 mm) thick.

C201001 1.3 FINISHES

C201001 1.3.1 Galvanizing

Hot-dip galvanizing: ASTM A 123, ASTM A 153/A 153M or ASTM A 653/A 653M, G90, as applicable.

C201001 1.3.2 Aluminum Finishes

Protect by plating, Class I anodic coatings, or 70% polyvinylidene fluoride organic coatings. See PTS Section C30 for additional coatings/finish information.

C201001 1.3.3 Safety Treads

NAAMM BG steel, Type W (welded).

C201001 1.3.4 Other Coatings

See PTS Section C30, *Interior Finishes*, for painted finishes.

C201001 1.4 CONCRETE STAIRS / STEPS

Provide interior or exterior concrete steps and stair with non-slip finish. For interior stairs, provide rubber or other finish treads. For exterior stairs, provide cast-in-place abrasive nosing. Provide steel guard and handrails as necessary. Fire stairs shall comply with NFPA 101.

C201001 1.4.1 Materials

a. Concrete - ACI 211.1, ACI 301/301M, and ACI 318/318M, with a compressive strength of 3,000 psi (20,680 kPa) or greater. Concrete Mix Design shall be suitable for the job conditions.
b. Reinforcements - Bars, fabrics, connectors, and chairs shall be galvanized.
c. Reinforcing Bars - ACI 301/301M
d. Welded Wire Fabric - ASTM A-185 or ASTM A 497
e. Cast Aluminum Safety Nosings – For exterior concrete stairs, provide safety nosings of cast aluminum with abrasive surfaces or with abrasive inserts.

C201001 1.5 WOOD STAIRS

Wood stairs may be used only for residential construction. Provide wood treads of minimum 1-1/4 inches thickness, of clear red or white oak. Risers shall be nominal one-inch finish lumber. Provide natural finish equivalent to one coat of sealer and two coats of varnish on all exposed surfaces.

C201002 FIRE ESCAPE STAIRS

Design fire escapes of the type and arrangement to conform to Fire Escape Stairs, of NFPA 101, Life Safety Code. Escape stairs shall be of steel or aluminum, conforming to the requirements of this specification section.

C201090 STAIR HANDRAILS, GUARDRAILS, AND ACCESSORIES

C201090 1.1 HANDRAILS

Design handrails in accordance with the IBC, except delete the handrail design load reduction code exceptions for residential, prisons, industrial, high hazard, and storage facilities. NAAMM PR, provide the same size rail and post. Provide series 300 stainless steel pipe collars. Factory coat all metal railings (except for ornamental metals such as brass, bronze, stainless steel, and nickel-silver) with a high performance coating in accordance with AAMA 2605, with a minimum coating thickness of 1.2 mils unless otherwise noted.

C201090 1.1.1 Steel Handrails

Provide steel handrails, including inserts in concrete, steel pipe conforming to ASTM A-53 or structural tubing conforming to ASTM A-500, Grade A or B of equivalent strength. Railings shall be hot-dip galvanized and shop painted for exterior applications and primed and shop painted for interior applications. Railing may be unpainted hot-dip galvanized in industrial areas.

C201090 1.1.2 Aluminum Handrails

Provide aluminum pipe railing conforming to ASTM B 429 or square aluminum semi-hollow tube conforming to ASTM B 221. Railings shall be coated with a high performance coating or anodized in accordance with AAMA 611, Class I.

C201090 1.1.3 Ornamental Handrails

Provide ornamental railings. Provide anchorage and fasteners as recommended by the product manufacturer. Railing system shall conform to ASTM E 985, minimum concentrated test load requirement.

C201090 1.1.4 Glass Handrails

Provide glass railings consisting of continuous 1/2-inch (13 mm) beveled tempered glass structural balusters with continuous railing cap and bottom shoe molding. Railing cap and shoe molding shall be 6063-T52 aluminum, type 304 stainless steel, brass, or bronze.

C201090 1.1.5 Wood Handrails

Wood handrails shall only be used for residential construction. Provide wood handrails of pre-finished natural hardwood. Wood shall be coated with hard acrylic finish to withstand indentations.

C201090 1.2 METAL LADDERS

C201090 1.2.1 Metal Ladders

Provide vertical ladders conforming to Section 7 of 29 CFR 1910.27.

C201090 1.2.2 Installation

Offset distance from the rungs to the finished wall surface not less than 7 inches (175 mm). Provide heavy clip angles riveted or bolted to the stringer and drilled for not less than two 1/2-inch (12 mm) diameter expansion bolts as indicated. Provide intermediate clip angles not over 48 inches (1200 mm) on center.

C201090 1.2.3 Ladder Cages

Where the height of the ladder is greater than 20 feet, provide a cage to conform to 29 CFR 1910.27.

a. Cage fabrication – Provide attachments for fastening bands to the side rails of ladders or directly to the structure.

-- End of Section --

SECTION C30

INTERIOR FINISHES
4/08

C30 GENERAL

C30 1.1 DESIGN GUIDANCE

Provide the design and installation in accordance with the following references. This Performance Technical Specification (PTS) adds clarification to the fundamental requirements contained in the following Government Standards. The general requirements of this PTS section are located in PTS Section Z10, *General Performance Technical Specification*.

Industry standards, codes, and Government standards referenced in the section text that are not found in the Unified Master Reference List (UMRL) in the Construction Criteria Base (CCB) at the Whole Building Design Guide Website , are listed below for basic designation identification. Comply with the required and advisory portions of the current edition of the referenced standard at the time of contract award.

C30 1.1.1 Industry Standards And Codes

FLOOR COVERING INSTALLATION CONTRACTOR'S ASSOCIATION (FCICA)

FLOOR COVERING INSTALLATION BOARD (FCIB)

C30 1.1.2 Government Standards

UNIFIED FACILITIES CRITERIA (UFC)

UFC 1-200-01, *General Building Requirements*

UFC 3-100-10, *Architecture*

UFC 3-120-10, *Interior Design*

C30 1.2 QUALITY ASSURANCE

C30 1.2.1 Paint Applicator’s Qualifications

C30 1.2.1.1 SSPC QP 1 Certification

For the application of industrial coatings identified in the Project Program, all contractors and subcontractors that perform surface preparation or coating application shall be certified by the Society for Protective Coatings (formerly Steel Structures Painting Council) (SSPC) to the requirements of SSPC QP 1 prior to contract award, and shall remain certified while accomplishing any surface preparation or coating application. The painting contractors and painting subcontractors must remain so certified for the duration of the project. If a contractor's or subcontractor's certification expires, the firm will not be allowed to perform any work until the certification is reissued. Requests for extension of time for any delay to the completion of the project due to an inactive certification will not be considered and liquidated damages will apply. Notify the Contracting Officer of any change in contractor certification status.

C30 1.3 PERFORMANCE VERIFICATION AND ACCEPTANCE TESTING

Verification of satisfactory interior finish assemblies' performance shall be via Performance Verification Testing, as detailed in this section of the RFP.

C30 1.3.1

Provide sample of textured ceiling application for DOR approval before resuming work. Sample shall be used as a reference for remaining application.

C30 1.3.2

Provide sample of multicolor paint application for DOR approval before resuming work. Sample shall be used as a reference for remaining application.

C30 1.3.3

Provide sample of terrazzo floor application for DOR approval before resuming work. Sample shall be used as a reference for remaining application.

C30 1.4 DESIGN SUBMITTALS

Design Submittals shall be in accordance with Z10, *General Performance Technical Specifications*, UFGS section 01 33 10.05 20, *Design Submittal Procedures*, UFC 1-300-09N, *Design Procedures* and UFC 3-100-10N, *Architecture*.

In addition, UFGS sections listed below or in the body of the PTS text are to be used by the Designer of Record (DOR) as a part of the design submittal. If the UFGS products or systems are applicable to the project, the DOR shall edit these referenced UFGS sections and submit them as a part of the design submittal specification. Edit the specification sections in accordance with the limitations stated in PTS section Z10, General Performance Technical Specifications.

UFGS 09 62 50.10, *Thin Film Flooring Systems for Aircraft Maintenance Facilities*

C30 1.5 CONSTRUCTION SUBMITTALS

Submit construction submittals in accordance with PTS section Z10, *General Performance Technical Specifications*. In addition to the Z10 requirements, the Designer of Record (DOR) shall approve the following construction submittals as a minimum:

Paint, Finish materials, Finish colors

Installation drawings for floors with carpet, tile, stone or terrazzo to include locations and details of seams, color and material transitions, details of divider strips, control joints, and crack control solutions.

Changes shall not be made to the finishes that are submitted and approved by the Government during the design phase. In the event that revisions may be required because of unforeseen conditions such as discontinued product, the revisions must be approved by the DOR and then submitted to the Government Interior Designer for approval before substitutions can be made.

C3010 WALL FINISHES

Interior wall finishes shall be moisture and mildew resistant, easily maintained, and suitable in accordance with industry standards for the architectural surface being finished. For painted wall finishes, refer to C3040 "INTERIOR PAINTING AND SPECIAL COATINGS".

C301001 CONCRETE WALL FINISHES

C301001 1.1 SPECIAL OR ARCHITECTURAL FINISHES ON INTERIOR CONCRETE WALLS

Cast-in-place or pre-cast concrete wall finishes shall include, but are not limited to, abrasive blasted surfaces, colored surfaces, exposed aggregate, grooved surfaces, or tooled surfaces.

C301002 PLASTER WALL FINISHES

Veneer plaster shall be gypsum plaster veneer finish on gypsum base finishes, or cement plaster veneer finish on concrete or masonry. Refer to Section C3040 for paint system and gloss level.

C301002 1.1 GYPSUM PLASTER

Provide gypsum neat plaster or high strength gypsum plaster base coat conforming to ASTM C28. High strength gypsum plaster shall have a compressive strength of not less than 2,500 psi, when tested dry in accordance with ASTM C472.

C301002 1.1.1

High-strength gypsum plaster finish coat shall have a compressive strength of not less that 4,500 psi when tested dry in accordance with ASTM C472.

C301002 1.1.2

Provide gypsum molding plaster for ornamental plaster in accordance with ASTM C59.

C301002 1.1.3

Provide Keene's cement finish coat conforming to ASTM C61.

C301002 1.1.4

Provide acoustical gypsum plaster finish coat conforming to ASTM E1042 Type I or II Class A, noncombustible.

C301002 1.2 CEMENT PLASTER

C301002 1.2.1

Portland cement plaster base coat in accordance with ASTM C150, gray Portland cement. Use Type I when no special characteristics are required, Type II when plaster and stucco will be exposed to moderate sulfate (alkali) action, Type III when early strength is needed as in cold weather, and Type V when high resistance to sulfate is required.

C301002 1.2.2

Portland cement plaster finish coat in accordance with ASTM C150, gray Portland cement Type I when no special characteristics are required, Type II when plaster and stucco will be exposed to moderate sulfate (alkali) action, Type III when early strength is needed as in cold weather.

C301002 1.2.3

Provide factory-mixed finish coat according to the manufacturer's instructions.

C301003 GYPSUM WALLBOARD FINISHES

Conform to specifications, standards and requirements in accordance with Gypsum Association GA 214, GA 216 and GA 224. Provide asbestos free materials only. Provide Type X gypsum board in fire rated assemblies. Provide a foil back gypsum board when a vapor retarder is required.

C301003 1.1 REGULAR GYPSUM BOARD

ASTM C36 and ASTM C1396 1/2 or 5/8 inch (12.7 mm or 15.9 mm) thick in residential construction, and 5/8 inch (15.9 mm) thick in non-residential construction, tapered edges.

C301003 1.2 MOISTURE RESISTANT GYPSUM BOARD

ASTM C630, 1/2 or 5/8 inch (12.7 mm or 15.9 mm) thick in residential construction, and 5/8 inch (15.9 mm) thick in non-residential construction. Use in humid areas or spaces but not as a substrate in tiled areas where wall tile is exposed to direct moisture contact or condensation accumulation.

C301003 1.3 CEMENTITIOUS BACKING UNITS

ANSI A108.11 and ANSI A118.9, 5/8 inch (15.9 mm) thick; use as a substrate for ceramic tile in wet areas that are exposed to direct moisture contact or condensation accumulation for areas including, but not limited to, tubs, shower enclosures, saunas, steam rooms, gang shower rooms, and shower drying rooms. Provide screws specifically designed for use with cement panels.

C301003 1.4 IMPACT RESISTANT GYPSUM BOARD

Reinforced gypsum panel with imbedded fiber mesh or lexan backing, 5/8 inch (15.9 mm) thick, tapered edges, in accordance with Structural Failure Test; ASTM E695 or ASTM D2394 and Indentation Test; ASTM D5420 or ASTM D1037. Provide metal framing of 20-gauge minimum. Provide fasteners that meet manufacturer requirements and specifications. Impact resistant gypsum board shall have a flame spread rating of 25 or less and a smoke developed rating of 50 or less, ASTM E84. Finish with a high strength plaster veneer. Refer to PTS C10 for further requirements on impact resistant wall construction.

C301003 1.5 JOINT TREATMENT

ASTM C475, Joint compound shall be specifically formulated and manufactured for use with and compatible with tape, substrate and fasteners as recommended by the manufacturer. Tape and finish gypsum board in accordance with ASTM C840, GA 214 and GA 216. Provide premanufactured joints at all structural expansion joints, crack control joints, and change of materials as recommended by the manufacturer and in accordance with GA 216.

C301003 1.6 FASTENERS

ASTM C514: Fasteners shall be compatible with each type of gypsum board material as recommended by the gypsum board manufacturer and in accordance with GA 216 and GA 224.

C301003 1.7 ACCESSORIES

ASTM C1047: Fabricate from corrosion protected steel or plastic designed for intended use. Accessories manufactured with paper flanges are not acceptable. Flanges shall be free of dirt, grease, and other materials that may adversely affect bond of joint treatment. Provide prefinished or job decorated materials. For predecorated gypsum board provide prefinished metal or plastic trim to match predecorated gypsum board. Install as recommended by GA 214, GA 216 and GA 224.

C301003 1.8 LEVEL OF FINISH

C301003 1.8.1

Tape and finish gypsum board in accordance with ASTM C840, GA 214 and GA 216. Plenum areas above ceilings shall be finished to GA 214, Level 1. Water resistant gypsum backing board, ASTM C630, to receive ceramic tile shall be finished to GA 214, Level 2. Walls to receive a heavy-grade wall covering or have textured finish before painting shall be finished to GA 214 Level 3. Walls without wall wash lighting to receive paint (MPI Gloss Level 2), light textures, or wall coverings shall be finished to GA 214 Level 4. Unless otherwise specified, all gypsum board walls, partitions shall be finished to GA 214 Level 5. Provide joint, fastener depression, and corner treatment. Do not use fiberglass mesh tape with conventional drying type joint compounds; use setting or hardening type compounds only. Provide treatment for water-resistant gypsum board as recommended by the gypsum board manufacturer.

C301003 1.8.2

Wherever gypsum board is to receive eggshell (MPI Gloss Level 3), semigloss (MPI Gloss Level 5), or gloss (MPI Gloss Level 6) paint finish, finish gypsum wall surface to GA 214 Level 5.

C301003 1.8.3

Where wall wash lighting will accent the flatness of the wall and surface irregularities in gypsum board joints, provide feature edge gypsum board and two coat joint compound fillers. Provide this special joint treatment at up lighting, down lighting and horizontal lighting at the end of a passageway wall.

C301004 TILE AND TERRAZZO WALL FINISHES

C301004 1.1 CERAMIC TILE WALL SYSTEM FINISHES

Provide ceramic tile wall systems as defined in the Tile Council of America (TCA) handbook for ceramic tile installations suitable for the service requirements listed. Install systems in accordance with ANSI A108/A118 series standards. Colored grout with sealer shall be provided. Coordinate with ceramic bath accessories for modularity. Include all trim pieces, caps, stops, and returns to complete installation.

C301004 1.1.1

Ceramic Mosaic Wall Tile shall be a minimum of 1/4 inch (6 mm) thick and installed from floor to ceiling, unless otherwise noted.

C301004 1.1.2

Wall tile shall be glazed, matte glazed or unglazed finish. Refer to project program for tile type, pattern, and surface texture.

C301004 1.1.3

Porcelain wall tile shall be through color, polished or unpolished. Refer to project program for tile type, pattern, and surface texture.

C301004 1.1.4

Provide wall tile color and style selections a minimum of one grade above base grade.

C301004 1.1.5

Provide Designer accent tile, accent strips and accessory ceramic tile shapes as an integral part of the ceramic wall tile system.

C301005 1.5 CORNER GUARDS

C301005 1.5.1

Corner guards shall be 3/32 inch (2.4 mm) thick and shall cover 1 inch (25 mm) each side of corner at right angles. Corner guards shall be clear polycarbonate. Use in executive areas, office areas, and wall-covered areas subject to cart traffic as a minimum.

C301005 1.5.2

Corner guards shall be 3/32 inch thick and shall cover 2-1/2 inches (64 mm) each side of corner at right angles. Corner guards shall be through color polycarbonate or rubber. Use in corridors or other high traffic areas.

If protective wall components from paragraphs C301090 – 1.5 and 1.6 are provided, corner guards shall be from the same lot and color as protective wall components.

C301090 OTHER WALL FINISHES

C301090 1.1 SOLID SURFACING WALL FINISHES

Solid surfacing material shall consist of 100% pure acrylic polymer, mineral fillers, and pigments. The material shall be homogenous, not coated or laminated, meeting ANSI Z124.3 and ANSI Z124.6 requirements. Superficial damage to a depth of 0.010 inch (.254 mm) shall be repairable by sanding or polishing. Provide manufacturer's full range of colors and patterns. Flammability, ASTM E84: Class-I/A, flame spread 25 maximum; smoke developed 30 maximum.

C301090 1.1.1

If used in a shower, solid surfacing wall finishes shall extend from top of shower pan to a minimum of 84 inches (2130 mm) or to underside of ceiling and shall surround the shower enclosure. Wall finish shall extend from top of tub to 84 inches (2130 mm) and shall surround tub shower. If used in a kitchen, solid surfacing wall finish shall extend from top of kitchen countertop to underside of wall cabinet.

C301090 1.1.2

Provide solid surfacing with factory recommended fasteners/adhesives/caulk to complete the installation.

C301090 1.2 PLASTIC LAMINATE WALL FINISHES

NEMA LD 3: Plastic laminate used for wall applications shall be commercial grade, high-pressure laminate with a #60 finish, approved for vertical applications.

C301090 1.2.1

The kitchen wall area between the counter top backsplash and the bottom of the wall cabinet shall be plastic laminate. Laminate wall finish shall include factory recommended fasteners/adhesives/caulk to complete the installation.

C301090 1.5 IMPACT RESISTANT PANEL OR WAINSCOT WALL FINISHES

The wall covering panel system, or wainscot, shall be an impact-resistant acrylic PVC sheet of a minimum 0.060 inch (1.5 mm) thickness in 4 foot by 8 foot (1219 mm by 2438 mm) sheets. The system shall be Class A (ASTM E84), UL listed, and chemical and stain resistant. It shall include all accessories, such as top caps, joint covers, and inside and outside corners, necessary for a complete installation. A full range of colors and textures shall be included. The wall panel system shall have coordinating color and pattern options for all components within the system. The wall panel system shall offer a 21 ounce (595 g) fabric backed vinyl wallcovering laminated to a 0.020 inch (.51 mm) rigid acrylic/PVC backing capped with 1 mil of protective film.

C301090 1.5.1

Impact Resistant Trim Finishes - Impact resistant chair or handrail system shall be a formed rigid PVC product. Chair or handrail shall be a minimum of 3 inches (76 mm) high and be mounted with concealed hardware. Chair or handrail system shall be chemical, stain, and bacteria resistant. Chair rail shall be UL classified, conforming to NFPA Class A fire rating and ASTM D256-90b for impact strength of 30.2 ft-lbs / inch thick.

C302001 TILE FLOOR FINISHES

Provide ceramic tile floor systems as defined in the Tile Council of America (TCA) handbook for ceramic tile installation and materials for the service requirements listed. Provide installation and materials in accordance with ANSI A108/A118 series standards, except do not use organic adhesives. Provide manufacturer's full range of colors and styles. Tile shall be a minimum of one grade above base grade.

Mortar shall be Portland cement, ANSI A108.1A/1B/1C/ A118.1, Latex-Portland cement, ANSI A108.5/A118.4 or Epoxy ANSI A108.6/A118.3.

Grout shall be factory sanded Portland cement, ANSI A108.10/A118.6, Latex-Portland cement, ANSI A108.10/A118.7 or Epoxy ANSI A108.6/A118.3. Provide tile joint grout sealer on white, light colored areas that are routinely exposed to water and liquid cleaning materials, entrance areas, and areas that require a high degree of stain resistance, and as required by the manufacturer. Provide chemical resistant epoxy resin for kitchens and other areas where high resistance to staining and absorption are required, ANSI A118.3.

Slip resistant tile shall have a minimum Coefficient of Friction (wet and dry) of 0.6, ASTM C1028. Tile shall have smooth, non-slip or textured surface and a glazed or unglazed finish. Non-slip or textured surface required for tile in areas where there is excessive water or grease and oils such as kitchens, dining facilities, toilets, and in industrial and maintenance facilities.

C302001 1.1 CERAMIC GLAZED FLOOR TILES

Ceramic glazed floor tiles shall be a minimum of 5/16 inch (8 mm) thick with a minimum of 1/8 inch (3 mm) grout width with cushioned edge. Tile shall have a 0.5 to 3.0 percent water absorption rate, ASTM C373. Do not use in areas where there is excessive water or grease and oils such as kitchens, dining facilities, toilets, showers, shower drying rooms, building entrance areas, and in industrial and maintenance facilities.

C302001 1.2 CERAMIC MOSAIC UNGLAZED FLOOR TILES

Ceramic Mosaic unglazed floor tiles shall be a minimum of 1/4 inch (6 mm) thick with a maximum of 1/16 inch (1.6 mm) grout width with cushioned edge. Tile shall have less than a 0.5 percent water absorption rate, ASTM C373. Use in toilets, showers and shower drying rooms and locker rooms.

C302001 1.3 PORCELAIN FLOOR TILE

Porcelain floor tiles shall be a minimum of 5/16 inch (8 mm) thick with a maximum of 1/4 inch (6 mm) grout width with cushioned edge. Tile shall have a minimum breaking strength of 300 pounds (202 kg), ASTM C648 and a maximum absorption rate of 0.5%, ASTM C373. Use in lobbies, corridors, toilets, kitchens, dining facilities, and other areas with minimal maintenance requirements, high resistance to staining, absorption and high durability requirements. Tile shall be color through, impervious, unglazed or glazed finish with an unpolished, semi-polished, polished, or textured surface.

C302001 1.4 QUARRY FLOOR TILE

Quarry floor tiles shall be a minimum of 1/2 inch (12.7 mm) thick tiles with a maximum of 1/4 inch (6 mm) grout width. Tile shall have a minimum breaking strength of 350 pounds (158 kg), ASTM C648 and a maximum absorption rate of 3%, ASTM C373. Use in lobbies, corridors, kitchens, dining facilities, and other areas with high durability requirements. Use grout release for darker pigmented grout colors. Tile shall have a maximum of 3.0 percent water absorption rate when tested in accordance with ASTM C373. Non-slip, abrasive grain or textured surface required for tile in areas where there is excessive water or grease and oils. Tile shall consist of semi-vitreous, vitreous or clay material with smooth or textured surface and unglazed finish.

C302002 TERRAZZO FLOOR FINISHES

Refer to Project Program for special design requirements.

C302002 1.1 BONDED TERRAZZO

Provide terrazzo, bonded to concrete, consisting of a terrazzo topping over an underbed. Use in all general areas requiring terrazzo. Where structural movement is anticipated which may injure the terrazzo, use the sand cushion (floating) method. Provide cementitious terrazzo in accordance with the NTMA bonded terrazzo specification.

C302002 1.2 RESINOUS TERRAZZO

Resinous terrazzo flooring shall be an epoxy terrazzo system that conforms to the requirements specified in the NTMA resinous epoxy specification.

C302004 RESILIENT FLOOR FINISHES

All resilient flooring shall meet or exceed applicable ADA horizontal requirements. Each type of flooring shall be installed with recommended adhesive in accordance with the manufacturers' written instructions. Installers shall be approved by the manufacturer in writing and shall have a minimum of 3 yrs experience for each type of flooring to be installed. A minimum of 2% total quantity for each type flooring, color and pattern shall be provided and stored within each building for future replacement and patching. Provide manufacturers full line of color and pattern selections, including multi-color patterns. Use the resilient floor finishes as identified in the Project Program or as directed below.

C302004 1.1 RESILIENT SHEET FLOORING SYSTEMS

C302004 1.1.1

Resilient linoleum sheet flooring shall be made with natural raw materials including linseed oil, flour, and rosin or resin binders double calendared onto natural jute backing, ASTM F2034, Type I. Pattern and color shall extend throughout thickness of material. Gage shall be 0.10 inch (2.5 mm). Static load limit shall be 250 psi per ASTM F970. Seal linoleum using manufacturer's recommended sealer for commercial application. The manufacturer's technical representative shall review and approve each typical sample application on-site prior to resuming the installation and shall spot check each 1,196 square yards (1000 square meters) for quality control. Work shall not commence on any portion of work until the manufacturer's technical representative renders approval on site. A manufacturer's five year warranty is required.

C302004 1.1.2

Resilient rubber sheet flooring shall be commercial quality, dimensionally stable, wear resistant, firm and slip resistant with integral color. The rubber sheet flooring shall be a three-layer construction consisting of a rubber wear layer, a cushioned layer, and a polyester backing. All components of the construction shall be thoroughly vulcanized to prevent delamination. The rubber sheet flooring shall conform to ASTM F1860-98 and require no wax maintenance.

C302004 1.1.3

Resilient homogeneous vinyl sheet flooring shall be commercial quality, 0.080 inch (2.0 mm) overall nominal gauge with a minimum wear layer thickness of 0.066 inch (1.6 mm) and a minimum of 6 feet (1.83 m) wide. It shall be non-layered, non-backed and include a protective urethane finish for ease of maintenance and conform to ASTM F1303, Type II Grade 1 Class A. Seams shall be recess scribed and heat welded with patterned or solid color weld rods depending on the contractor’s design intent to camouflage, blend or accent the seam lines. Resilient homogeneous vinyl sheet flooring shall require no wax maintenance.

C302004 1.1.4

Resilient heterogeneous vinyl sheet flooring shall be commercial quality, 0.080 inch (2.0 mm) overall nominal gauge with a minimum wear layer thickness of 0.066 inch (1.6 mm) and a minimum of 6 feet (1.83 m) or 12 feet (3.6 m) wide. It shall include a protective urethane finish for ease of maintenance and conform to ASTM F1303, Type I Grade 1 Class A. Seams shall be recess scribed and heat welded with patterned or solid color weld rods depending on the contractor's design intent to camouflage, blend or accent the seam lines. Resilient heterogeneous vinyl sheet flooring shall require no wax maintenance.

C302004 1.2 RESILIENT TILE FLOORING SYSTEM

C302004 1.2.1

Resilient vinyl composition tile (VCT) shall be commercial grade, asbestos free, with a nominal overall gauge of 1/8 inch (3 mm) and a wear layer thickness of 1/8 inch (3 mm) nominal. The tile shall be manufactured in accordance with Federal Specification SS-T-312B (1), Type IV, Comp. 1, Class 2, through pattern. Tile shall be finished in accordance with manufacturer’s written instructions.

C302004 1.2.2

Resilient static dissipative vinyl composition tile (SDT) shall be of commercial grade, asbestos free, with a nominal overall gauge of 1/8-inch (3 mm) and a wear layer thickness of 1/8-inch (3 mm) nominal; with an antistatic additive. The SDT tile shall conform to ASTM F1066, Class 2 through pattern. The flooring shall be installed with recommended adhesive and accessories; and finished in accordance with the manufacturer's written instructions. Use SDT floors in computer areas or areas with sensitive electronic where the Project Program requires tile.

C302004 1.2.3

Resilient vinyl tile shall be 0.1 inch (2.5 mm) thick, with a vinyl wear layer of 0.035 inches (.9 mm) and shall be planks or square tiles. It shall include a protective urethane finish for ease of maintenance and conform to ASTM E648, Type III, Class 1 and ASTM F1700, Class III. Provide vinyl tile that are easily cleaned with off-the-shelf products. Surface finishes requiring manufacturer supplied or special order cleaning solutions are not acceptable. Vinyl tile flooring shall have a marble, granite, stone, terrazzo, or wood pattern. A manufacturer's 10-year warranty is required.

C302004 1.2.4

Resilient rubber tile shall be 100% synthetic rubber with color through, slip resistance formulation, with a minimum base thickness of 0.125 inch (3.2 mm) and a minimum stud height of 0.024 inch (0.6 mm). Rubber tile shall conform to ASTM F1344, Class I and ASTM E648, Class 1. The product shall require no wax maintenance. A manufacturer's 10-year warranty is required for a raised round or square surface profile. A manufacturer's 5-year warranty is required for other surface textures with slip resistant formulation.

C302004 1.2.5

Resilient athletic rubber tile shall be 100% synthetic heavy rubber or recycled crumb rubber tile, 3/8 inch (9 mm) thick. Rubber tile shall conform to ASTM F1344 for recycled crumb rubber tile. The product shall require no wax maintenance. A manufacturer’s 2-year warranty is required. Use rubber tile flooring in weight and exercise rooms.

C302004 1.2.6

Resilient linoleum tile shall be made with natural raw materials including linseed oil, flour, and rosin or resin binders double calendared onto synthetic jute backing, ASTM F2034, Type I. Pattern and color shall extend throughout thickness of material. Gage shall be 0.10 inch (2.5 mm). Static load limit shall be 250 psi per ASTM F970. Seal linoleum using manufacturer's recommended sealer for commercial application. The manufacturer's technical representative shall review and approve each typical sample application on-site prior to resuming the installation and shall spot check each 1,196 square yards (1000 square meters) for quality control. Work shall not commence on any portion of work until the manufacturer's technical representative renders approval on site. A manufacturer's 5-year warranty is required.

C302005 CARPETING

C302005 1.1 GENERAL

Installer(s) shall be approved by the manufacturer in writing. Carpet manufacturer shall be established and in good standing with the industry. A minimum of 5% total quantity for each color and pattern shall be provided and stored within the building for future replacement patching.

C302005 1.2 CARPET CONSTRUCTION

Provide carpet types based on Table I, "Carpet Construction Type by Facility."

TABLE I - CARPET CONSTRUCTION TYPE BY FACILITY

Facility Type	Tufted Cut Pile	Tufted Loop Pile	Tufted Cut and Loop	Tufted Tip Shear	Tufted Frieze	Woven Loop or Cut & Loop	Carpet Tile
Administrative	-	X	X	X	X	X	X
Open Plan Offices	-	X	X	X	-	X	X
Private Offices	X	X	X	X	X	X	X
Corridors	-	X	X	X	-	X	X
Conference Rooms	X	X	X	X	X	X	X
Child Care Centers	-	X	-	-	-	-	X
Family Housing	X	X	-	-	-	-	-
Bachelor Officer's Quarters	X	X	X	-	-	X	-
Bachelor Enlisted Quarters	-	X	-	-	-	X	X
Lodging Facilities	X	X	X	X	X	X	X
Training/Educational	-	X	X	-	-	X	X
Borders and insets	X	X	X	X	X	X	X

C302005 1.3 CARPET SEVERE WEAR SPECIFICATIONS

Provide carpet that complies with Table II, "Carpet Specifications for Severe Wear Classification."

TABLE II - CARPET SPECIFICATIONS FOR SEVERE WEAR CLASSIFICATION

Carpet Construction	Pile Fiber	Weight oz/SY (kg/m2) min. x.037	Pile Height in. (mm) min.	Gauge min.	Pile Density oz/cu. yd. (kg/m3) min.
Tufted Cut Pile	CF NYLON	32(1.18)	.175(4.45)	1/10	6600 (270)
Tufted Loop Pile	CF NYLON	26(0.82)	.120(3.05)	1/10	6600 (270)
Tufted Cut and Loop	CF NYLON	28(1.04)	.135(3.43)	1/10	7400 (303)
Tufted Tip Shear	CF NYLON	28(1.04)	.135(3.43)	1/10	7400 (303)

Tufted Frieze	CF NYLON	32(1.18)	.175(4.45)	1/10	6600 (270)
Woven Loop	CF NYLON	26(1.04)	.135(3.43)	1/8	7400 (303)
Woven Cut and Loop	CF NYLON	26(1.04)	.135(3.43)	1/8	7400 (303)

C302005 1.4 CARPET PILE FIBER

a. 100% premium branded, solution-dyed, Type 6 or Type 6.6 continuous hollow filament nylon

C302005 1.5 CARPET BACKING REQUIREMENTS

a. Provide manufacturer's standard high performance carpet backing.
b. Moisture resistant carpet backing shall pass the 24 hour British Spill Test.
c. Moisture proof carpet backing shall pass the 10,000 Impacts Test.
d. Provide moisture resistant carpet backing with an attached urethane cushion, minimum 18 lb. density.
e. Provide moisture proof carpet backing with integral high density cushion of thermoplastic, urethane, or PVC.

C302005 1.6 CARPET PERFORMANCE CHARACTERISTICS

a. Flammability: Carpet shall meet the Critical Radiant Flux Classification of not less than 0.45 W/sq. cm. when tested in accordance with ASTM E648. Carpet shall generate less than 450 rating when tested in accordance with ASTM E662
b. Static Control: Carpet shall include a permanent static control system to control static build-up to less than 3.0 KV in accordance with AATCC-134.
c. Dimensional Stability: Carpet shall be permanently dimensionally stable with no delamination of components or any edge raveling or zippering.
d. Colorfastness to Crocking: Not less than 4, wet and dry, per AATCC-165.
e. Colorfastness to Light: Not less than 4 after 40 AFU (AATCC fading units) per AATCC-16.
f. Antimicrobial Activity: Not less than 0.08-inch (2-mm) halo of inhibition for gram-positive bacteria; not less than 0.04-inch (1-mm) halo of inhibition for gram-negative bacteria; no fungal growth, per AATCC-174.
g. Provide carpets with recycled fiber content, and renewable material content in the attached cushion or backing materials certified by an independent testing agency.
h. Written Warranty: Lifetime commercial warranty for texture retention and edge raveling, zippering, delamination is required. Seam preparation and adhesives shall be recommended by the carpet manufacturer in accordance with the warranty.
i. Appearance Retention: Provide carpet with a multi-color pattern for excellent appearance retention and soil hiding characteristics.
j. Indoor Air Quality: Provide carpets that meet the criteria of the CRI "Green Label" Indoor Air Quality Testing Program.

C302005 1.7 CARPET INSTALLATION

Install carpet by one of the following methods in accordance the manufacturer's recommendations and in accordance with the Carpet and Rug Institute, CRI-104, Standard for Installation Specification of Commercial Carpet, compatible with the construction, backing, and pattern characteristics of each carpet provided.

a. Direct Glue Down Carpet Installation
b. Double Glue Down Carpet and Pad Installation
c. Carpet with Attached-Cushion Installation
d. Preapplied releasable "dry" adhesive system installation.
e. Stretch-In Carpet Installation with tack strips and pad
f. Stretch-In Installation with hook-and-loop system.

C302006 MASONRY AND STONE FLOORING

C302006 1.1 UNIT MASONRY FLOORING SYSTEM

Unit masonry flooring system and coordinating base shall be fired red clay brick, or chemical resistant brick unit masonry flooring. Provide unit masonry flooring systems in accordance with the Brick Industry Association recommendations and the Tile Council of America *Handbook for Ceramic Tile Installation*.

C302006 1.2 STONE FLOOR AND BASE FINISHES

C302006 1.2.1

Natural Stone Flooring and coordinating base shall be of marble, granite, or travertine.

C302006 1.2.2

Aggregate Stone Tile and coordinating base shall be a composite of marble or granite.

C302006 1.2.3

Install stone floor and base in accordance with the recommendations of the Marble Institute of America, the Indiana Limestone Institute of America, Inc. the National Building Granite Quarries Association, Inc. in addition to the Tile Council of America *Handbook for Ceramic Tile Installation* as applicable to the type of stone being installed.

C302007 WALL BASE FINISHES

Provide a wall base for transition between floor and wall finish. If no other type of base is required, provide rubber or vinyl straight base at carpet installations, rubber or vinyl cove base at exposed concrete or resilient tile floors, and a base to match the floor material at hard surface tile floors, or as required in the project program.

C302007 1.1 RESILIENT WALL BASE FINISHES

C302007 1.1.1

All rubber wall bases shall be 4 inch (100 mm) high and 1/8 inch (3.2 mm) thick as required unless indicated otherwise. The wall base shall include inside and outside corners and shall conform to ASTM F1861-98, Type TS. Provide wall base in rolls and not 4 foot lengths.

C302007 1.1.2

Flash-coved integral resilient sheet wall bases shall be installed in accordance with the manufacturers' printed instructions to include a cove stick having a minimum radius of 3/4 inch (19 mm) and finished with an approved cap strip.

C302007 1.5 TILE BASE FINISHES

Coordinate tile base with ceramic wall and floor tile for color, material match and modularity. Include all pre-manufactured trim pieces, special shapes, caps, stops, and returns to provide a complete installation. Provide coordinating wall, base and floor tile for curb construction at showers.

C302008 STAIR FINISHES

C302008 1.1 RESILIENT STAIR TREADS, RISERS AND LANDINGS

Refer to C302004 for resilient landing finishes. Provide rubber risers to match treads or one piece tread/risers. Provide treads with raised patterns and visually impaired nosing inserts as required.

C302009 1.1 REFLECTIVE, CHEMICAL AND SLIP RESISTANT FLOOR SYSTEMS

C302009 1.1.1 Thin Film Floor Coating

The Designer of Record shall utilize UFGS Specification Section 09 62 50.10, *Thin Film Flooring System for Aircraft Maintenance Facilities*, for the project specification submittal and for test patch, surface preparation, and installation requirements. Use MPI Product #212 "Thin Film Flooring System for Aircraft Maintenance Facilities" for product specifications.

C302009 1.1.2 Dry Shake Floor Topping

System shall be a nonferrous, non-oxidizing metallic aggregate, dry-shake surface hardener system consisting of specially processed cementitious binder, plasticizer, and water-reducing admixtures, formulated and processed under the stringent quality control of the manufacturer. "Lumpiplate" as manufactured by ChemRex, a subsidiary of Master Builder Technologies and "Diamond Plate" as manufactured by The Euclid Chemical Company comply with this specification. The hardener shall be proportioned and sealed in standard moisture resistant bags. The manufacturer shall guarantee their aggregate to be free of rust, corrosive materials, oil, petroleum, or other water-base materials when delivered. The manufacturer shall replace any material found to contain any such materials, or any other material, which is deemed unsatisfactory. The manufacturer shall provide a full-time technical representative, qualified in designing and adjusting concrete mixes, to assist in the application of the aggregate surface hardener system. A mono molecular surface evaporation retardant film, as recommended by ACI 305R and ACI 308R, shall be provided for use under drying conditions, due to high concrete or ambient temperatures, low humidity, high winds, and so forth. This includes heated interiors during cold weather, to aid in maintaining concrete moisture during the early placement stages of the plastic concrete. Retarder shall be certified by its manufacturer to be compatible with the surface hardener and shall be used in accordance with the manufacturer's recommendations. Curing and sealing materials and procedures shall be as recommended by the manufacturer of the aggregate surface hardener system and ASTM C309 or ASTM C1315. All installation shall be in accordance with manufacturer’s instructions. Coordinate the concrete mix design with the dry shake floor topping manufacturer to optimize bond of floor finish to slab. Spread topping mix with a mechanical spreader.

C302010 HARDENERS AND SEALERS

C302010 1.1 HARDENED AND SEALED CURE CONCRETE FLOORS

Harden and seal concrete floors in accordance with the finished floor manufacture requirements. Utilize other methods of concrete curing if the floor finish manufacturer does not recommend a chemical hardener or sealer. Concrete floors that can utilize a hardener-sealer and will be exposed to traffic shall receive a minimum of two coats of hardener-sealer curing agent for dust protection. These hardener-sealer-cured floors shall be finished with a curing agent that shall penetrate the concrete to permanently seal the floor against moisture and the penetration of contaminants. The curing agent shall be non-toxic, non-flammable, and non-combustible and shall be installed in accordance with the manufacturer’s printed instructions. The finished floor shall be dust-free.

C302010 1.2 COLORED CONCRETE FLOORS

Colored concrete floors shall include a colored pigment either applied as a topical dye; or a concrete topping with integral color pigment; or a dry shake pigment application, as required by the project program. Concrete floor shall be trowel applied in a pattern, or shall include grit for slip resistance.

C302011 1.4 THRESHOLD(S)

Provide interior thresholds of nonferrous materials where flooring materials or floor levels change.

C302011 1.5 RAMPS

Provide ramps of required slip resistance and slope conforming to ATBCB ADA Title III.

C3030 CEILING FINISHES

Refer to C3040 "INTERIOR PAINTING AND SPECIAL COATINGS" for painted ceiling finishes.

C303001 ACOUSTICAL CEILING TILES AND PANELS

C303001 1.1 ACOUSTICAL CEILING PANELS

All acoustical ceiling panels shall be 24 inch by 24 inch (610 mm by 610 mm), with a minimum light reflectance of .75 (except as noted), Class A, flame spread 25 or less and smoke development of 50 or less, ASTM E84. All acoustical ceiling panels shall have minimum 60% recycled content except as noted. Acoustical ceiling panels shall conform to ASTM E1264. Provide square edge except as noted.

C303001 1.1.1

For typical open office areas, conference rooms, executive offices, provide non-asbestos mineral composition acoustical ceiling panels of Type-III with factory-applied standard washable painted finish or Type-IV with factory-applied plastic membrane-faced vinyl, Form 1, 2, or 3. Provide reveal edge in lobbies, conference rooms, and command suites; otherwise, provide square edge in all other locations to receive acoustical panels.

C303001 1.1.2

For typical humid areas such as toilets, kitchens, fitness, and locker rooms, provide non-asbestos mineral or glass composition acoustical ceiling panels bonded with ceramic, moisture-resistant thermo-setting resin, or other moisture-resistant material with factory-applied standard washable painted finish; and recycled content: minimum of 40%.

C303001 1.1.3

For areas with very high humidity, heavy soiling, staining, impact abrasion, or limited security concerns, such as bachelor's quarters, laundry rooms, or maintenance shops, provide Type V, Steel or Type VII, aluminum faces with white baked on enamel finish, and non-asbestos mineral composition absorbent backing.

C303001 1.1.4

For areas requiring a concealed grid system, provide non-asbestos mineral composition acoustical ceiling panels of Type III with factory-applied standard washable painted finish or Type IV with factory-applied plastic membrane-faced vinyl, Form: 1, 2, or 3; Size: 12 inch by 12 inch by 5/8 inch (305 mm by 305 mm by 19 mm), Edge: for concealed grid installation.

C303001 1.1.5

Provide NRC and CAC ratings as follows:

Type of space	Minimum NRC	Minimum CAC
Open Office Areas	.75	40-44
Conference Rooms, Classrooms	.60	35-39
Activity spaces, Lobbies, Corridors	.60	35-39
Executive offices	.60	35-39
Toilets	.50	35-39
Kitchens	.50	35-39
Fitness/Locker Rooms	.50	35-39
All other spaces	.50	35-39

Base the tested NRC value on Mounting Type E-400 of ASTM E795.

C303002 GYPSUM WALLBOARD CEILING FINISHES

Conform to specifications, standards and requirements in accordance with Gypsum Association GA 214, GA 216 and GA 224. Provide asbestos free materials only. Provide featured edge gypsum board on all gypsum surfaces that flatness of joints will be visible, such as uplighted ceilings, window lighted ceilings, and as recommended by the manufacturer. Provide Type X gypsum board in fire rated assemblies.

C303002 1.1 REGULAR GYPSUM BOARD

ASTM C36 and ASTM C1396, 1/2 or 5/8 inch (12.7 mm or 15.9 mm) thick, tapered edge. Provide 5/8 inch (15.9 mm) for all projects except for single family residential, which may utilize 1/2 inch (12.7 mm) if other requirements, such as sound control, are met.

C303002 1.2 MOISTURE RESISTANT GYPSUM BOARD

ASTM C630, 1/2 or 5/8 inch (12.7 mm or 15.9 mm) thick, tapered edges. Use for ceilings in humid areas. Do not use as a substrate in tiled areas where tile will be exposed to direct moisture contact or condensation accumulation. Support moisture resistant gypsum board at 12 inches (305 mm) on center. Provide 1/2 inch (12.7 mm) for single-family residential projects only. Provide 5/8 inch (15.9 mm) for all other projects.

C303002 1.3 CEMENTITIOUS BACKING UNITS

ANSI A108.11 and ANSI A118.9, 1/2 or 5/8 inch (12.7 mm or 15.9 mm) thick; use for adhesive applied ceramic tile in wet areas (tubs, shower enclosures, saunas, steam rooms, gang shower rooms, or for shower areas with a veneer plaster finish. Support cementitious backing units at 12 inches (305 mm) on center. Provide screws specifically designed for use with cement panels.

C303002 1.4 IMPACT-RESISTANT GYPSUM BOARD

ASTM E695 or ASTM D2394, and Indentation Test; ASTM D5420 or ASTM D1037: Reinforced gypsum panel with imbedded fiber mesh or lexan backing, 5/8 inch thick, tapered edges, in accordance with Structural Failure Test. For use whenever gypsum board partitions are allowed for barracks, training facilities, and industrial facilities. Provide metal framing of 20-gauge minimum. Provide fasteners that meet manufacturer requirements and specifications. Impact resistant gypsum board shall have a flame spread rating of 25 or less and a smoke developed rating of 50 or less, ASTM E84. Finish with a high strength veneer plaster.

C303002 1.5 TEXTURED CEILING FINISH SYSTEM

Applied textured ceiling finish shall be plaster based. Refer to paragraph "C301002 - 1.1 GYPSUM PLASTER" for finish requirements.

C303002 1.6 JOINT TREATMENT

ASTM C475, Joint compound shall be specifically formulated and manufactured for use with and compatible with tape, substrate and fasteners as recommended by the manufacturer. Tape and finish gypsum board in accordance with ASTM C840, GA 214 and GA 216. Provide premanufactured joints at all structural expansion joints, crack control joints, and change of materials as recommended by the manufacturer and in accordance with GA 216.

C303002 1.7 FASTENERS

ASTM C514, Fasteners shall be compatible with each type of gypsum board material as recommended by the gypsum board manufacturer and in accordance with GA 216 and GA 224.

C303002 1.8 ACCESSORIES

ASTM C1047, Fabricate from corrosion protected steel or plastic designed for intended use. Accessories manufactured with paper flanges are not acceptable. Flanges shall be free of dirt, grease, and other materials that may adversely affect bond of joint treatment. Provide prefinished or job decorated materials. Install as recommended by GA 214, GA 216 and GA 224.

C303002 1.9 LEVEL OF FINISH

C303002 1.9.1

Tape and finish gypsum board in accordance with ASTM C840, GA 214 and GA 216. Ceilings to receive a heavy-grade wall covering or heavy textured finish before painting shall be finished to GA 214, Level 3. Ceilings without critical lighting to receive flat paints, light textures, or wall coverings shall be finished to GA 214, Level 4. Unless otherwise specified, all gypsum board walls, partitions and ceilings shall be finished to GA 214, Level 5. Provide joint, fastener depression, and corner treatment. Do not use fiberglass mesh tape with conventional drying type joint compounds; use setting or hardening type compounds only. Provide treatment for water-resistant gypsum board as recommended by the gypsum board manufacturer.

C303002 1.9.2

Wherever gypsum board is to receive eggshell, semigloss or gloss paint finish, or where severe, up or down lighting conditions occur, finish gypsum wall surface to GA 214 Level 5. In accordance with GA 214 Level 5, apply a thin skim coat of joint compound to the entire gypsum board surface, after the two-coat joint and fastener treatment is complete and dry.

C303003 PLASTER CEILING FINISHES

C303003 1.1 VENEER PLASTER CEILING FINISHES SYSTEM

Veneer plaster ceilings shall be gypsum plaster veneer finish to gypsum base finishes. Refer to Section C3040 for paint system and gloss level. Provide gypsum neat plaster, gypsum ready-mixed plaster, or high strength gypsum plaster base coat conforming to ASTM C28. High strength gypsum plaster shall have a compressive strength of not less than 2,500 psi, when tested dry in accordance with ASTM C472.

C303004 WOOD CEILINGS

Not Used.

C303005 SUSPENSION SYSTEMS

C303005 1.1 EXPOSED SUSPENDED ACOUSTICAL CEILING GRID

Provide 24 inch by 24 inch (610 mm by 610 mm) aluminum or steel non-corroding intermediate-duty standard grid system for lay-in acoustical panels (ASTM C635). Finish shall be factory applied white baked enamel. Provide manufacturer's hold down clips for fire rated assemblies and wall or edge molding. Hang grid system as recommended by manufacturer but with no less than 0.106 inch (2.7 mm) diameter wires (ASTM A641A, Class 1), or with one by 3/16 inch (4.76 mm) galvanized steel straps conforming to ASTM A653A, (for light commercial zinc coating) or ASTM A366A, (with an electrodeposited zinc coating, Type RS). Use ASTM A580, composition 302 or 304, condition annealed stainless steel, 0.106 inches (2.7 mm) in diameter over high humidity areas such as commercial kitchens and pools. Install suspended grid system with acoustical sealant (ASTM C843, nonstaining and ASTM C636). Recycled content shall be a minimum of 25%.

C303005 1.2 CONCEALED SUSPENDED ACOUSTICAL CEILING GRID

Provide 12 inch by 12 inch (305 mm by 305 mm) aluminum or steel non-corroding intermediate-duty concealed grid system for lay-in acoustical panels (ASTM C635). Finish shall be factory applied white baked enamel. Provide manufacturer's wall or edge molding. Hang grid system as recommended by manufacturer but no less than with 0.106 inch (2.7 mm) diameter wires (ASTM A641A, Class 1), or with one by 3/16 inch galvanized steel straps conforming to ASTM A653A, (for light commercial zinc coating) or ASTM A366A, (with an electrodeposited zinc coating, Type RS). Install suspended grid system with acoustical sealant (ASTM C843, nonstaining) and in accordance with ASTM C636. Recycled content shall be a minimum of 25%.

C303005 1.3 SUSPENDED AND FURRED CEILING SYSTEMS

ASTM C841 (for lath); ASTM C645 (for GWB)

Provide steel materials for metal support systems with galvanized coating per ASTM A653, G60; aluminum coating ASTM A463, T1-25; or a 55% aluminum-zinc coating. Provide suspended ceiling framing in accordance with ASTM C754, except framing members shall be 16 inches unless otherwise noted.

C303006 METAL STRIP CEILINGS

Not Used.

C303090 OTHER CEILING AND CEILING FINISHES

C3040 INTERIOR COATINGS AND SPECIAL FINISHES

The following coatings are applied directly to all surfaces of interior construction.

C304001 GENERAL REQUIREMENTS

All paint shall be suitable in accordance with the Master Painter Institute (MPI) standards for the interior architectural surface being finished. The current MPI, "Approved Product List" as of the date of contract award, will be used to determine compliance with the submittal requirements of this specification. The Contractor may choose to use a more current MPI "Approved Product List"; however, only one list may be used for the entire contract. All coats on a particular substrate, or a paint system, must be from a single manufacturer. No variation from the MPI Approved Products List is acceptable.

MPI paint systems identified in the RFP take precedence over other MPI systems. If the RFP does not identify a paint system applicable to all painting of the facility, utilize the MPI architectural painting, interior system manual to identify appropriate paint systems. Utilize the "premium grade" systems and comply with all limitations stated in the MPI "approved products list" for each system. Products having an MPI EPR 3 rating shall be given preferential consideration over lower EPR ratings. The higher performing systems shall be used unless the lower performing systems can be justified based on life cycle costs to include surface preparation, application, disposal, environmental impact, and recoating cycles based on exposure requirements. Only use paint products that have been tested for the MPI's "detailed performance". Do not use products that have been tested only for "intended use".

C304001 1.1 MPI GLOSS LEVELS

Gloss levels shall comply with the MPI system of determining gloss as defined in the Evaluation sections of the MPI Manuals. Utilize the performance characteristics of the paint gloss and sheen to categorize paint rather than manufactures' description of his product.

The MPI Gloss Levels are indicated by the notation G1, G2, G3, G4, G5, G6, or G7. Use G2 "Velvet-like" Flat for ceilings, residential walls away from human contact and low traffic areas. Use G3 "Eggshell-like" in high traffic areas for ceilings and walls, when human contact with the wall is limited, and for dark accent colors. Use G5 Semigloss for ceilings, walls, doors and trim for high durability and clean ability when a surface is expected to have human contact and is routinely touched. Use G6 Gloss only in special situations such as for piping identification or special effects. The MPI Gloss and Sheen Standard values are measured per ASTM D523, method D and are as follows:

Gloss Level Number	Gloss@ 60 Degrees	Sheen @ 85 Degrees
Gloss Level 1(G1) - Matte or Flat	Max 5 units	Max 10 units
Gloss Level 2(G2) - "Velvet-like" Flat	Max 10 units	10-35 units
Gloss Level 3(G3) - "Eggshell-like"	Max 10-25 units	10-35 units
Gloss Level 4(G4) - "Satin-like"	Max 20-35 units	Min 35 units
Gloss Level 5(G5) - Semi-Gloss	35-70 units	
Gloss Level 6(G6) - Gloss	70-85 units	
Gloss Level 7(G7) - High Gloss	More than 85 units	

C304001 1.2 MPI SYSTEM DESIGNATIONS AND ABBREVIATIONS

The MPI coating system number in each Division is found in either the *MPI Architectural Painting Specification Manual* or the *Maintenance Repainting Manual* and defined as an interior system (INT/RIN).

a. INT designates an interior coating system for new surfaces.
b. RIN designates an interior coating system used in repainting projects or over existing coating systems.
c. DSD - the MPI short-term designation for Degree of Surface Degradation as defined in the Assessment sections in the *MPI Maintenance Repainting Manual*. Degree of Surface Degradation designates the MPI Standard for description and appearance of existing condition of surfaces to be painted. This DSD classification is used to determine the proper surface preparation necessary for painting.
d. DFT - The short-term designation for dry film thickness. DFT is the minimum acceptable depth or thickness of a coating or system in the dry state. The maximum acceptable DFT is not more than 50% greater than the minimum acceptable DFT (example... DFT = 2 mils, maximum DFT = 3 mils). The DFT indicated in the paint systems below relate to new coatings - MPI INT. MPI RIN will be less than the indicated DFT.
e. Paint System Abbreviations: BF - Block Filler; C - Clear coat; P - Primer coat; I - Intermediate coat; T - Topcoat.

C304001 1.3 SURFACE PREPARATION

Comply with the "Interior Surface Preparation" section of the *MPI Architectural Painting Specification Manual* or the "Interior Surface Preparation" section of the *MPI Maintenance Repainting Manual*. All suggestive language such as "may" or "should" are deleted from the standard and "must" or "shall" inserted in its place. Suggestive language such as "recommended" or "advisable" is deleted from the standard and "require" or 'required" inserted in its place. The results of these wording substitutions change this document to required procedures. For surface preparation, determine a MPI DSD Assessment of each surface and comply with the MPI Surface Preparation Requirements relating to the assessments.

C304002 CONCRETE FINISHES

C304002 1.1

New and uncoated existing, and Existing, previously painted, Concrete surfaces:

a. High Performance Architectural Latex, System DFT: 4 mils

1) MPI INT 3.1C-G2/RIN 3.1J-G2 (Flat); P: MPI 3, I: MPI 138, T: MPI 138

2) MPI INT 3.1C-G3/RIN 3.1J-G3 (Eggshell-like); P: MPI 3, I: MPI 139, T: MPI 139

3) MPI INT 3.1C-G5/RIN 3.1J-G5 (Semigloss); P: MPI 3, I: MPI 141, T: MPI 141

b. Institutional Low Odor / Low VOC Latex, System DFT: 4 mils

1) MPI INT 3.1M-G3/RIN 3.1L-G3 (Eggshell-like); P: MPI 3, I: MPI 145, T: MPI 145

2) MPI INT 3.1M-G5/RIN 3.1L-G5 (Semigloss); P: MPI 3, I: MPI 147, T: MPI 147

C304002 1.2

New and uncoated existing and Existing, previously painted Concrete surfaces in toilets, food-preparation, food-serving, restrooms, laundry areas, shower areas, areas requiring a high degree of sanitation, and other high humidity areas unless otherwise specified, (Fill all holes in masonry surface):

a. Waterborne Light Industrial Coating, Not for human or abrasive contact areas, System DFT: 4.8 mils

1) MPI INT 3.1L-G5/RIN 3.1C-G5 (Semigloss); P: MPI 153, I: MPI 153, T: MPI 153

b. Alkyd, System DFT: 4.5 mils

1) MPI INT/RIN 3.1D-G5 (Semigloss); P: MPI 3, I: MPI 47, T: MPI 47

c. Epoxy, System DFT: 4 mils

1) MPI INT 3.1F-G6/RIN 3.1E-G6 (Gloss); P: MPI 77, I: MPI 77, T: MPI 77

C304002 1.3

New and uncoated existing and Existing, previously painted concrete floors:

a. Latex Floor Paint, MPI INT/RIN 3.2A-G2 (Flat); System DFT: 5 mils, P: MPI 60, I: MPI 60, T: MPI 60
b. Epoxy, MPI INT/RIN 3.2M-G6 (Gloss), System DFT: 5 mils, P: MPI 77, I: MPI 77, T: MPI 77

C304003 CONCRETE MASONRY FINISHES

C304003 1.1

New and uncoated Existing Concrete masonry:

a. High Performance Architectural Latex, System DFT: 11 mils

1) MPI INT 4.2D-G2 (Flat); BF: MPI 4, P: N/A, I: MPI 138, T: MPI 138

2) MPI INT 4.2D-G3 (Eggshell-like); BF: MPI 4, P: N/A, I: MPI 139, T: MPI 139

3) MPI INT 4.2D-G5 (Semigloss); BF: MPI 4, P: N/A, I: MPI 141, T: MPI 141

b. Institutional Low Odor / Low VOC Latex, System DFT: 4 mils

1) MPI INT 4.2E-G3 (Eggshell-like); BF: MPI 4, P: N/A, I: MPI 145, T: MPI 145

2) MPI INT 4.2E-G5 (Semigloss); BF: MPI 4, P: N/A, I: MPI 147, T: MPI 147

c. Multi-color, MPI INT 4.2H, BF: MPI 4, P: MPI 125, I: MPI 112, T: MPI 112, C: MPI 121

C304003 1.2

Existing, previously painted Concrete masonry:

a. High Performance Architectural Latex, System DFT: 4.5 mils

1) MPI RIN 4.2K-G2 (Flat); P: MPI 50, I: MPI 138, T: MPI 138

2) MPI RIN 4.2K-G3 (Eggshell-like); P: MPI 50, I: MPI 139, T: MPI 139

3) MPI RIN 4.2K-G5 (Semigloss); P: MPI 50, I: MPI 141, T: MPI 141

b. Institutional Low Odor / Low VOC Latex, System DFT: 4 mils

1) MPI RIN 4.2L-G3 (Eggshell-like); P: MPI 50, I: MPI 145, T: MPI 145

2) MPI RIN 4.2L-G5 (Semigloss); P: MPI 50, I: MPI 147, T: MPI 147

c. Multi-color, MPI INT 4.2E; BF: MPI 4, P: MPI 125, I: MPI 112, T: MPI 112, C: MPI 121

C304003 1.3

New and uncoated Existing Concrete masonry units in toilets, food-preparation, food-serving, restrooms, laundry areas, shower areas, areas requiring a high degree of sanitation, and other high humidity areas unless otherwise specified, (Patch imperfections and fill all masonry surface voids with block filler):

1. Waterborne Light Industrial Coating, Not human or abrasive contact areas, System DFT: 11 mils

   1) MPI INT 4.2K-G5 (Semigloss); BF: MPI 4, P: N/A, I: MPI 153, T: MPI 153

2. Alkyd, System DFT: 12 mils

   1) MPI INT 4.2N-G5 (Semigloss); BF: MPI 4, P: MPI 50, I: MPI 47, T: MPI 47

3. Epoxy, System DFT: 10 mils

   1) MPI INT 4.2G-G6 (Gloss); BF: MPI 116, P: N/A, I: MPI 77, T: MPI 77

C304003 1.4

Existing, previously painted, concrete masonry units in toilets, food-preparation, food-serving, restrooms, laundry areas, shower areas, areas requiring a high degree of sanitation, and other high humidity areas unless otherwise specified (Patch imperfections and fill all masonry surface voids with block filler):

a. Waterborne Light Industrial Coating, Not for human or abrasive contact areas, System DFT: 4.5 mils

   1) MPI RIN 4.2G-G5 (Semigloss); P: MPI 50, I: MPI 153, T: MPI 153

b. Alkyd, System DFT: 4.5 mils

   1) MPI RIN 4.2C-G5 (Semigloss); P: MPI 50, I: MPI 47, T: MPI 47

c. Epoxy, System DFT: 5 mils;

   1) MPI RIN 4.2D-G6 (Gloss); P: MPI 77, I: MPI 77, T: MPI 77

C304004 METAL FINISHES

C304004 1.1

New and Existing, previously painted steel/ferrous surfaces not otherwise specified:

a. High Performance Architectural Latex, System DFT: 5 mils

   1) MPI INT 5.1R-G3 (Eggshell-like); P: MPI 79, I: MPI 139, T: MPI 139

   2) MPI INT5.1R-G5 (Semigloss); P: MPI 79, I: MPI 141, T: MPI 141

2. Alkyd, System DFT: 5.25 mils

   1) MPI INT 5.1E-G3 (Eggshell-like); P: MPI 79, I: MPI 51, T: MPI 51

2) MPI INT 5.1E-G5 (Semigloss); P: MPI 79, I: MPI 47, T: MPI 47

C304004 1.2

New and Existing, previously painted steel/ferrous surfaces in toilet, food preparation, food serving, restrooms, shower areas and areas requiring a high degree of sanitation and other high humidity areas not otherwise specified except floors, hot metal surfaces, and new prefinished equipment:

a. Alkyd, System DFT: 5.25 mils

1) MPI INT 5.1E-G5 (Semigloss); P: MPI 79, I: MPI 47, T: MPI 47

C304004 1.3

New and Existing, previously painted miscellaneous non-ferrous surfaces not otherwise specified:

a. High Performance Architectural Latex, System DFT: 5 mils. MPI INT 5.4F-G5 (Semigloss); P: MPI 95, I: MPI 141, T: MPI 141
b. Alkyd, System DFT: 5 mils. MPI INT 5.4J-G5 (Semigloss); P: MPI 95, I: MPI 47, T: MPI 47

C304004 1.4

New and Existing, previously painted miscellaneous galvanized doors not otherwise specified:

a. Epoxy, System, MPI INT 5.3D-G6 (Gloss); P: MPI 101, I: MPI 77, T: MPI 77
b. Alkyd, System DFT: 5 mils. MPI INT 5.3C-G5 (Semigloss); P: MPI 26, I: MPI 47, T: MPI 47

C304005 INTERIOR WOOD FINISHES

C304005 1.1

New and Existing, uncoated wood and plywood not otherwise specified:

a. High Performance Architectural Latex, System DFT: 4.5 mils

1) MPI INT 6.4S-G4 (Satin-like); P: MPI 39, I: MPI 140, T: MPI 140

2) MPI INT 6.4S-G5 (Semigloss); P: MPI 39, I: MPI 141, T: MPI 141

b. Alkyd, System DFT: 4.5 mils, MPI INT 6.4B-G5 (Semigloss); P: MPI 45, I: MPI 47, T: MPI 47
c. Institutional Low Odor / Low VOC Latex, System DFT: 4 mils

1) MPI INT 6.4T-G4 (Satin-like); P: MPI 39, I: MPI 146, T: MPI 146

2) MPI INT 6.4T-G5 (Semigloss); P: MPI 39, I: MPI 147, T: MPI 147

C304005 1.2

Existing, previously painted wood and plywood not otherwise specified:

a. High Performance Architectural Latex, System DFT: 4.5 mils

1) MPI RIN 6.4B-G4 (Satin-like); P: MPI 46, I: MPI 140, T: MPI 140

2) MPI RIN 6.4B-G5 (Semigloss); P: MPI 46, I: MPI 141, T: MPI 141

b. Alkyd, System DFT: 4.5 mils, MPI RIN 6.4C-G5 (Semigloss); P: MPI 46, I: MPI 47, T: MPI 47
c. Institutional Low Odor / Low VOC Latex, System DFT: 4 mils

1) MPI RIN 6.4D -G4 (Satin-like); P: MPI 39, I: MPI 146, T: MPI 146

2) MPI RIN 6.4D-G5 (Semigloss); P: MPI 39, I: MPI 147, T: MPI 147

C304005 1.3

New and Existing, previously finished or stained wood and plywood, except floors; natural finish or stained:

a. Natural finish, oil-modified urethane, System DFT: 4 mils, MPI INT 6.4J-G4/RIN 6.4L-G4 (Satin-like); P: MPI 57, I: MPI 57, T: MPI 57
b. Stained, oil-modified urethane, System DFT: 4 mils, MPI INT 6.4E-G4/RIN 6.4G-G4 (Satin-like); P: MPI 90, I: MPI 57, T: MPI 57

C304005 1.4

New and Existing, previously-finished or stained wood floors; natural finish or stained:

a. Natural finish, oil-modified urethane, System DFT: 4 mils, MPI INT/RIN 6.5C-G6 (Gloss); P: MPI 56, I: MPI 56, T: MPI 56
b. Stained, oil-modified urethane, System DFT: 4 mils, MPI INT/RIN 6.5B-G6 (Gloss); P: MPI 90, I: MPI 56, T: MPI 56

C304005 1.5

New and Existing, uncoated wood surfaces in toilets, food-preparation, food-serving, restrooms, laundry areas, shower areas, areas requiring a high degree of sanitation, and other high humidity areas not otherwise specified:

a. Waterborne Light Industrial Coating, System DFT: 4.5 mils, MPI INT 6.3P-G5 (Semigloss); P: MPI 45, I: MPI 153, T: MPI 153
b. Alkyd, System DFT: 4.5 mils, MPI INT 6.3B-G5 (Semigloss); P: MPI 45, I: MPI 47, T: MPI 47

C304005 1.6

Existing, previously painted wood surfaces in toilets, food-preparation, food-serving, restrooms, laundry areas, shower areas, areas requiring a high degree of sanitation, and other high humidity areas not otherwise specified:

a. Waterborne Light Industrial Coating, (Not for human or abrasive contact areas) System DFT: 4.5 mils, MPI INT 6.3P-G5 (Semigloss); P: MPI 46, I: MPI 153, T: MPI 153
b. Alkyd, System DFT: 4.5 mils, MPI INT 6.3B-G5 (Semigloss); P: MPI 46, I: MPI 47, T: MPI 47

C304005 1.7

New and existing uncoated wood doors:

a. Alkyd, System DFT: 4.5 mils,

1) MPI INT 6.3B-G5 (Semigloss); P: MPI 45, I: MPI 47, T: MPI 47

C304006 GYPSUM WALL BOARD FINISHES

C304006 1.1

New and Existing, previously painted Gypsum Wallboard not otherwise specified (interior gypsum finish of exterior wall):

a. High Performance Architectural Latex, System DFT: 4 mils

1) MPI INT/RIN 9.2B-G2 (Flat); P: MPI 50, I: MPI 138, T: MPI 138

2) MPI INT/RIN 9.2B-G3 (Eggshell-like); P: MPI 50, I: MPI 139, T: MPI 139

3) MPI INT/RIN 9.2B-G5 (Semigloss); P: MPI 50, I: MPI 141, T: MPI 141

b. Institutional Low Odor / Low VOC Latex, System DFT: 4 mils

1) MPI INT/RIN 9.2M-G3 (Eggshell-like); P: MPI 50, I: MPI 145, T: MPI 145

2) MPI INT/RIN 9.2M-G4 (Satin-like); P: MPI 50, I: MPI 146, T: MPI 146

3) MPI INT/RIN 9.2M-G5 (Semigloss); P: MPI 50, I: MPI 147, T: MPI 147

c. Multi-color, MPI INT9.2G; P: MPI 125, I: MPI 112, T: MPI 112, Clear Coat: MPI 121

C304006 1.2

New and Existing, previously painted Gypsum Wallboard in toilets, food-preparation, food-serving, restrooms, laundry areas, shower areas, areas requiring a high degree of sanitation, and other high humidity areas not otherwise specified:

a. Waterborne Light Industrial Coating, (Not for human or abrasive contact areas) System DFT: 4 mils, MPI INT/RIN 9.2L-G5 (Semigloss); P: MPI 50, I: MPI 153, T: MPI 153
b. Alkyd, Use for metal or trim for a durable, hard finish. System DFT: 4 mils, MPI INT/RIN 9.2C-G5 (Semigloss); P: MPI 50, I: MPI 47, T: MPI 47
c. Epoxy, use for high-humidity areas requiring easy cleaning enamel finishes. System DFT: 4 mils, MPI INT 9.2E-G6 (Gloss) / MPI RIN 9.2D-G6 (Gloss) P: MPI 50, I: MPI 77, T: MPI 77

C304007 SPECIAL COATINGS TO WALLS

C304007 1.1 HIGH PERFORMANCE ARCHITECTURAL COATING (HIPAC)

HIPAC shall be a durable, organic system applied to a continuous (seamless) high-build film and cure to a hard glaze finish. They shall be resistant to continuous heat and humidity, abrasion, staining, chemicals, and biological growth. Coating shall be installed as a complete system, and as recommended by the manufacturer and have a flame spread index of not more than 25 and a smoke developed index of not more than 50 when tested in accordance with ASTM E84.

C304007 1.1.1

Two-component, epoxy-polyamide shall be chemical and corrosion-resistant, adhesive, alkali-resistant, and water-tolerant for metal, wood, concrete, masonry surfaces, and painted surfaces where high gloss or glaze type finish, extreme workability and resistance to abrasion and stains is required. Minimum dry film thickness is 3 mils for each of two coats. Furnish Gloss or Semigloss finish. Maximum volatile organic compounds (VOC) shall be 340 grams/liter.

C304007 1.1.2

Single Component, Moisture-Curing Urethane shall be a flexible, abrasion- and impact-resistant, use for floors, walls, machinery, equipment and other surfaces where good abrasion resistance, color retention, gloss retention, graffiti resistance and good resistance to acids, alkalis, solvents, strong cleaners and sanitizers, fuel and chemicals are necessary. Can also be used on concrete floors, brick and masonry surfaces (properly conditioned), metals (properly primed), and wood (properly prepared and sealed.) Minimum dry film thickness is 3 mils for each of 3 coats. Use Type I, Aliphatic, for exterior use except for oily or resinous exterior wood surfaces. Use Type II, Aromatic, for interior use.

C304007 1.2 IMPACT RESISTANT WALL FINISHES

Provide textured acrylic architectural coating system: a seamless textured acrylic water-based coating system, having a thickness of at least 20 mils, on surfaces scheduled to receive it. System shall be composed of pure acrylic polymers, silica dioxide, ethylene dioxide and pigments. System shall have a Barcoll Hardness Index of 35.0 or greater, a flame spread of 8.5 or less as determined by ASTM E84, smoke contribution of 7.0 or less, and have water vapor permeability of 27.5 English Perms or greater when tested in accordance with ASTM E96. (MPI 42)

Finish may only be installed by factory-qualified applicators in accordance with the manufacturer's printed instructions and recommendations, to fulfill warranty requirements. All coating system components shall be products of the same manufacturer. A minimum of one sample wall application shall be provided. Upon approval of the sample wall by the project manager, the application shall serve as a standard for the remaining work. The manufacturer's certified representative shall provide an on-site training demonstration of the application and care of the finish for the end-user's facility manager or other representative.

-- End of Section --

THIS PAGE HAS BEEN INTENTIONALLY LEFT BLANK

SECTION D10

CONVEYING
12/08

D10 GENERAL

D10 1.1 DESIGN GUIDANCE

Provide the design and installation in accordance with the following references. This Performance Technical Specification (PTS) adds clarification to the fundamental requirements contained in the following Government Standards. The general requirements of this PTS section are located in PTS Section Z10, *General Performance Technical Specification*.

Industry standards, codes, and Government standards referenced in the section text that are **not** found in the Unified Master Reference List (UMRL) in the Construction Criteria Base (CCB) at the Whole Building Design Guide Website , are listed below for basic designation identification. Comply with the required and advisory portions of the current edition of the referenced standard at the time of contract award.

D10 1.1.1 Industry Standards and Codes

Although some the following references are listed in the UMRL, they are repeated here for emphasis.

ASME A17.1, *Safety Code for Elevators and Escalators*

ASME A17.2, *Guide for Inspection of Elevators, Escalators, and Moving Walks*

ASME A18.1, *Safety Standard for Platform Lifts and Stairway Chairlifts*

ASME B20.1, *Safety Standards for Conveyors and Related Equipment*

ASME B30.11, *Safety Standard for Monorails and Underhung Cranes*

ASME B30.16, *Safety Standard for Overhead Hoists*

ASME B30.17, *Safety Standard for Overhead and Gantry Cranes (Top Running Bridge, Single Girder, Underhung Hoists)*

D10 1.1.2 Government Standards

NAVAL FACILITIES ENGINEERING COMMAND (NAVFAC)

ITG NAVFAC Elevator Design Guide (2001) - (This guide can be found at the following web address: http://www.wbdg.org/ccb/NAVFAC/INTCRIT/fy01_01.pdf)

D10 1.2 PERFORMANCE VERIFICATION AND ACCEPTANCE TESTING

Verification of satisfactory Conveying systems performance shall be via Performance Verification Testing, as detailed in this section of the RFP.

D10 1.2.1 Testing and Inspections for Elevators

a. All testing and inspections shall be conducted in the presence of both the Elevator Specialist and a NAVFAC Certified Elevator Inspector. The Elevator Inspector shall complete, sign, and post the results of all tests and inspection results after successful completion of inspection and testing. The Contractor is responsible for all costs involved with reinspection and retesting required for correcting discrepancies discovered during testing and the subsequent retesting required, including all costs and expenses incurred by the Government Furnished Inspector.

b. Testing Materials and Instruments:

Provide testing materials and instruments required for final inspection, including a current equipment calibration certification.

c. Field Tests for Elevators:

In addition to the tests required by ASME A17.1 AND ASME A17.2, perform the following:

1) Endurance Tests - Test each elevator for a period of one hour continuous run, with specified rated load in the car. Restart the one hour test period from beginning, following any shutdown or failure. During the test run, stop car at each floor in both directions of travel for standing period of 10 seconds per floor. The requirements for Rated Speed, Leveling, Temperature Rise, and Motor Amperes testing specified herein shall be met throughout the duration of the Endurance test.

2) Speed Tests - Determine actual speed of each elevator in both directions of travel with rated load and with no load in elevator car. Minimum acceptable elevator speed is the Rated speed specified. Maximum acceptable elevator speed is 110 percent of Rated speed.

3) Leveling Tests - Test elevator car leveling devices for landing accuracy of plus or minus 1/4-inch (6 mm) at each floor with no load in car, symmetrical load in car, and with rated load in car in both directions of travel. Car sill must be level with landing sills.

4) Temperature Rise Tests - Determine temperature rise of elevator hoisting motor, motor-generator, exciter, and booster during full-load test run for one hour minimum. Under these conditions, maximum acceptable temperature rise shall not exceed acceptable temperature rise indicated on manufacturer's data plate. Start test only when equipment is within 9 degrees F (5 degrees C) of ambient temperature.

5) Motor Ampere Tests - Measure and record motor amperage when motor is running and elevator is lifting at rated load and speed. Measure and record the motor amperage at beginning and end of endurance test. Test results must not exceed nameplate amperage when motor is running and elevator is lifting at rated load speed.

6) Balance Load for Electric Elevators Tests - Perform electrical and mechanical balance load tests of car and counterweight.

7) Automatic Shutoff Valve Tests - Test the automatic shutoff

valve twice. Once at beginning of acceptance test and again at conclusion of one-hour Endurance test to ensure consistent performance of shutoff valve, regardless of temperature of equipment and oil.

8) Perform miscellaneous tests called for in this Section.

D10 1.3 DESIGN SUBMITTALS

Design Submittals shall be in accordance with Z10, *General Performance Technical Specifications*, UFGS section 01 33 10.05 20, *Design Submittal Procedures*, UFC 1-300-09N, *Design Procedures*, UFC 3-100-10N, *Architecture* and UFC 3-300-10N, *Structural Engineering*.

D10 1.4 CONSTRUCTION SUBMITTALS

Submit construction submittals in accordance with PTS section Z10, *General Performance Technical Specifications*. In addition to the Z10 requirements, the Designer of Record (DOR) shall approve the following construction submittals as a minimum:

a. Shop Drawings for Vertical Transportation Equipment (VTE)

1) Elevator Construction Submittals:

In addition to the submittal requirements of ASME A17.1, provide the following submittals:

Detail drawings must include dimensioned layouts in plan and elevation showing the arrangement of elevator equipment, accessories, supporting systems, anchorage of equipment, clearances for maintenance and operation; and details on hoistway, doors and frames, operation and signal stations, controllers, motors, guide rails and brackets, and points of interface with normal power, fire alarm system, HVAC or exhaust systems, and interface with emergency power systems. Drawings shall show any revised building electrical system required to make supplied elevator system function as specified. Drawings shall contain complete wiring diagrams showing electrical connections and other details required to demonstrate sequence of operations and functions of system devices. Drawings shall include the appropriate sizing of electrical protective devices, which are frequently different from National Electrical Code standard sizes. Submit one set of wiring diagrams in plastic or glass cover, framed, and mounted in elevator machine room. Deliver other sets to Contracting Officer. Coded diagrams are not acceptable unless adequately identified.

2) Construction Submittals for OMSI:

Submit final submittals for OMSI Manual. After approval by the DOR and sign-offs by the elevator inspector, assimilate construction submittals into the OMSI manuals required under Section 01 78 24.05 20, *Facility Operation and Maintenance Support Information*.

b. Construction Submittals for Weight Handling Equipment (WHE):

1) Submit to DOR drawings showing the general arrangement of the track beam system, including curves and switches, clearances, principal dimensions, details of structural connections, and all component details. Other items to be submitted for review and approval include electrical one-line diagrams, and catalog cuts for all major components. General arrangements shall show clearances between crane structure and building interferences and maximum crane wheel loads. Manufacturer's catalog data will suffice for items of standard manufacturer.

2) Construction Submittals for OMSI:

Submit final submittals for OMSI Manual. After approval by the DOR, assimilate construction submittals into the OMSI manuals required under Section 01 78 24.05 20, *Facility Operation and Maintenance Support Information*.

c. Field Test Reports

D1010 ELEVATORS AND LIFTS

The design and construction of elevators shall comply with the *ITG Elevator Design Guide*.

D1010 1.1 QUALIFICATION OF MANUFACTURER AND INSTALLER

Provide elevator by manufacturer regularly engaged in the manufacture of elevator systems. Manufacturer shall either install elevator system or shall provide letter of endorsement certifying that installer is acceptable to manufacturer. Installer is required to be regularly engaged in installation and maintenance of elevator systems.

Only in the State of Hawaii, use this paragraph: Perform work involving the installation or repair of elevator equipment under the supervision of a person who is licensed in elevator repair in the State of Hawaii or who possesses the equivalent experience. Furnish data to the Contracting Officer for verification that the person exercising direct supervision of the work possesses such experience.

D101001 GENERAL CONSTRUCTION ITEMS

Comply with ASME A17.1 AND ASME A17.2 in their entirety, and additional requirements specified herein. Install in accordance with manufacture’s instructions, ASME A17.1, UFAS AND ADAAG, and NFPA 70. Do not cut or alter Structural Members. Restore damaged or defaced work to original condition. Include recesses, holes, patching, grouting, cutouts, slots, and refinishing to accommodate the installation. Use core drilling to drill new holes in concrete. Finish work to be straight, level, and plumb. During installation, protect machinery and equipment from dirt, water, or mechanical damage. At completion, clean all work, and repair any prefinished items that have been damaged during the performance of the work.

Elevators that are intended to carry personnel other than one (1) operator must be classified as a passenger elevator. Passenger elevators that are intended to carry furniture or equipment, must have an oversized cab. Refer to the Project Program for the type of elevator required.

D101001 1.1 TRAFFIC ANALYSIS

Provide a traffic analysis in accordance with criteria established by a nationally recognized elevator manufacturer's association and conduct interviews with the U ser to determine the following:

a. Passenger or Freight
b. Rated load
c. Rated speed
d. Travel length
e. Number of stops
f. Number of hoistway openings
g. Car platform, car inside, and hoistway door opening dimensions
h. Hoistway Door Types
i. Car Door type
j. For Freight Elevators, identify Class Loading Type - Class A, B, or C, to handle loads as indicated on the project program.

D101001 1.2 ELEVATOR MACHINE ROOM

Provide a machine room for every elevator. Locate the elevator machine and controller in the Elevator Machine Room.

D101002 PASSENGER ELEVATORS

D101002 1.1 HOISTWAY AND CAR EQUIPMENT

D101002 1.1.1 Car and Counterweight Guide Rails and Fastenings

Paint rail shanks with one coat of black enamel. Only T-section type guide rail is acceptable.

D101002 1.1.2 Pit Channel

Provide pit channel for anchorage of main guide rail brackets and also for anchorage of counterweight guide rail brackets and buffer for electric elevators. Each channel shall span distance between guides. On completion of guide rail and buffer installation, both pit channels shall be fully grouted.

D101002 1.1.3 Pit "STOP" Switch

Provide push/pull type pit "STOP".

D101002 1.1.4 Wiring and Traveling Cables

Cables shall be suspended by means of self-tightening webbed devices.

D101002 1.2 CAR AND LANDING DOOR EQUIPMENT

D101002 1.2.1 Infrared Curtain Unit

Provide Infrared Curtain Unit (ICU) with multiple infrared beams that protect to the full height of the door opening. Minimum coverage shall extend from 2 inches (50 mm) off the floor to 70 inches (1778 mm) above floor level.

D101002 1.2.2 Hoistway Entrance Frames

Door frame shall be 14-gage #4 brushed stainless steel, unless directed otherwise by Contracting Officer. Solidly grout uprights of entrance ways to height of 5 feet (1500 mm).

D101002 1.2.3 Car and Hoistway Landing Sills

Car and Hoistway Landing Sill - Provide one piece cast solid white bronze or nickel silver entrance sill. Use same material for hoistway and car entrance sills. Solidly grout under full length of sill.

D101002 1.3 IN-CAR AND LANDING FIXTURES

D101002 1.3.1 Car and Hall Buttons

Provide recessed vandal-resistant push buttons of minimum 3/4-inch (19 mm) size satin-finish stainless steel with illuminating jewel center.

D101002 1.3.2 Position and Direction Indicators

Provide position and direction indicators in car and at each landing.

D101002 1.3.3 Direction Audible Signals

Provide audible signals in car and at each landing.

D101002 1.4 CAR AND CAB EQUIPMENT

D101002 1.4.1 Roller Guides

Provide coil-spring loaded roller guide assemblies in adjustable mountings on each side of car and counterweight frames in accurate alignment at top and bottom of frames.

D101002 1.4.2 Certificate Window

Provide 4 inch (100 mm) high by 6 inch (150 mm) wide certificate window in car operating panel for elevator inspection certificate.

D101002 1.4.3 Cab Ventilation

Provide natural and forced ventilation with two-speed fan.

D101002 1.4.4 Protection Pads and Mounting Hooks

Provide stainless-steel hooks and fire retardant protective pads for one elevator in a set.

D101002 1.4.5 Car Enclosure

Car Shell Return Panels, Entrance Columns, Cove Base, and Transom: Provide 14 gage (1.9 mm) minimum non perforated steel. Apply sound-deadening mastic on all exterior components.

Provide finishes for the elevator cab interior that are appropriate for the type of facility. Finishes shall not exceed the flame spread rates mandated by ASME A17.1.

D101002 1.5 ELEVATOR CONTROLLER

D101002 1.5.1 Non-proprietary Controller

a. On-Board Diagnostic Panel

1) Provide a non-proprietary micro-processor controller for each individual elevator and group controller. Provide an on-board diagnostic control and LCD display panel that allows unrestricted access to the comprehensive range of adjustable parameters necessary to perform installation, adjusting, service, maintenance, and testing of the elevator.
2) Provide LCD displays with the capability to display, monitor, and diagnose any and all fault logs, fault history, trouble calls, and diagnostics. Provide three (3) copies of the complete manufacturer's software program, with complete software documentation, that shall enable the same level of unrestricted access to all controllers of the same make and model, regardless of the installation date or location.

b. External Port - For each individual elevator and group controller, provide a USB port or an RS 232 port that allows connection to an on-site portable laptop computer. Provide the same level of unrestricted access as the on-board diagnostic panel.

c. Repair Requirements - For repair of the microprocessor control system(s), provide maintenance tools, supporting computer software, and software documentation required for complete maintenance of elevator system including diagnostics and adjustments. On-board diagnostic panels shall not require recharging to maintain their memory or authorization for use. Software shall not require periodic reprogramming, or reauthorization. Programs shall be stored in non-volatile memory.

D101002 1.6 OPERATIONAL CONTROLS

D101002 1.6.1 Independent Service

Provide exposed key-operated switch in car operating panel to enable independent service.

D101002 1.6.2 Hoistway Access Switches

Provide key-operated hoistway access switch to permit limited movement of car at terminal floors for car positioning, operative only when "INSPECTION" switch in car operating panel is in the "INSPECTION" position. Locate switch 6 feet (1800 mm) above floor level, within 12 inches (300 mm) of hoistway entrance frame or with only ferrule exposed when located in entrance frame.

D101002 1.6.3 Emergency Commandeering Service

Provide momentary pressure "ON-OFF" key switch and indicator light at all landings. Provide indicator lights that automatically illuminate during emergency service. Key must be removable only when key is in "OFF" position. Provide in accordance with ASME A17.1.

D101002 1.6.4 Keys for Elevator Key Switches

Provide minimum of twelve keys per unique cylinder used on all key switches for single elevator.

D101002 1.7 MAINTENANCE AND DIAGNOSTIC COMPONENTS

D101002 1.7.1 Maintenance and Diagnostic Tools

Provide all special tools and software necessary to service and maintain each elevator; deliver at time of final acceptance. Provide one of each tool for each elevator machine room.

D101002 1.8 ADDITIONAL REQUIREMENTS FOR HYDRAULIC ELEVATORS

D101002 1.8.1 Hydraulic System

Provide hydraulic system which operates at a maximum working pressure of less than 500 psig.

a. Scavenger Pump Unit - Provide a scavenge oil reservoir, with strainer and transfer pump. Provide a manual-reset pit flood switch to prevent pump operation if pit is flooded. Anchor pump and oil reservoir to the pit floor.
b. Pressure Piping and Accessories - Provide ASTM A 53/A 53M or ASTM A 106/A 106M, Schedule 80, black steel piping with ASME B16.9 or ASME B16.11 fittings for supply piping. Provide welded or threaded forged pipe fittings that are located between the pump control valve body and the cylinder inlet. Extend Schedule 80 piping from the pump control valve body, inside the pump unit, to the hydraulic cylinder in the hoistway. Provide dielectric union at each end of the "pump to cylinder" oil supply line. Provide hangers or supports for all piping.
c. Oil Temperature Device - Provide means to maintain oil temperature between 80 and 120 degrees F (27 and 49 degrees C) regardless of ambient temperature.

D101002 1.8.2 Cylinder-Plunger Unit

Provide a plunger of single-piece seamless steel construction. Provide threaded 1/4-inch (6 mm) bleeder valve at top of cylinder just below packing gland. Telescopic or inverted cylinder-plunger units are not acceptable. Provide cylinder with self-stabilizing mount that will support and hold cylinder plumb without the need for stabilization means at the bottom of the cylinder.

D101002 1.8.3 Automatic Shutoff Valve

Provide automatic shut-off valve in oil supply line as close to cylinder inlet as possible. Provide threaded pipe connections to the valve. Provide manual lowering feature on valve. Provide exposed adjustments of automatic shut-off valve with means of adjustment sealed by certified elevator inspector after being set to correct position and tested.

D101002 1.8.4 Well Casing

Line well with steel casing, minimum 1/4-inch wall with welded 1/2-inch steel bottom, set plumb. Install cylinder well casing plumb using spider bob method.

a. PVC Liner - Provide Schedule 80 PVC pipe liner with bottom cap and couplings; joints sealed watertight using PVC pipe manufacturer's recommended adhesive or heat welding methods. Provide liner inside diameter not less than 3-inch (76 mm) larger than elevator cylinder maximum outside diameter. Set PVC liner into well casing, centered and plumb. PVC liner may be provided as a manufacture’s applied liner or as a separate component.
b. Cylinder Installation - Install Cylinder plumb into PVC.
c. Cylinder Evacuation Tube - Provide a 3/4-inch (19 mm) PVC evacuation tube with strainer located within 6 inch (152 mm) of bottom of liner. Provide top of test tube with removable cap to exclude foreign matter.
d. Pressure Test - Test liner-cylinder assembly as a sealed unit. Provide safety relief valve set to relieve at 10 psig (69 kPag); 4.5 inch (114 mm) diameter dial pressure gage scaled for 0 to 50 psig (0 to 175 kPag) and calibrated to 0.5 percent accuracy; and an air pressure admission throttling and shutoff valve. Perform air pressure test in the presence of the Elevator Inspector. For safety, pressure test shall only be performed when liner and cylinder are fully inserted and assembled in the well casing. Perform the test from remote location outside of the elevator pit.
e. Secure cylinder/PVC liner assembly as recommended by cylinder manufacturer.
f. Seal - Seal gap between steel well casing and PVC liner with foam insert strong enough to retain and support final grouting. Provide 3000 psi (21 MPa) grout to a minimum of 4 inch (102 mm) thickness and level top of final grouting with pit floor.
g. Containment - Protect exposed portions of hydraulic elevator oil supply line that are installed below ground, including portions encapsulated in concrete, or covered by construction, with continuous Schedule 80 PVC containment.

D101003 FREIGHT ELEVATORS

D101003 1.1 FREIGHT ELEVATOR REQUIREMENTS

Code compliance and all other general compliance items for freight elevators shall be as for passenger elevators, except for such items deleted, altered, or added to by the project program.

D101003 1.2 ADDITIONAL REQUIREMENTS FOR FREIGHT ELEVATORS

a. Guides - In addition to ASME A17.1, for freight elevators with greater than 10,000 pound (4545 Kg) capacity, slide guides are permitted in lieu of roller guides.
b. Horizontal Buck Board Wall Protection – Provide 2-1/2 inch (63 mm) thick (minimum) x 12 inch (304 mm) high (minimum) #2 oak protection boards on all side walls of the elevator at a height to prevent damage from fork lift traffic.

-- End of Section --

THIS PAGE HAS BEEN INTENTIONALLY LEFT BLANK

SECTION D20

PLUMBING
1/10

D20 GENERAL

D20 1.1 NARRATIVE

This section must be used in conjunction with all parts of the Design Build (D/B) Request for Proposal (RFP) to determine the full requirements of this solicitation.

This section includes the construction of interior plumbing systems. This section covers installations inside the facility and out to the five foot line. See Section G30, *Site Mechanical Utilities*, for continuation of systems beyond the five foot line.

D20 1.2 PLUMBING DESIGN GUIDANCE

Provide the design and installation in accordance with the following references. This Performance Technical Specification (PTS) adds clarification to the fundamental requirements contained in the following Government Standards. The general requirements of this PTS section are located in PTS Section Z10, *General Performance Technical Specification*.

D20 1.2.1 Government Standards

Federal Energy Management Program (FEMP)

UNIFIED FACILITIES CRITERIA (UFC)

UFC 3-400-10N, *Mechanical Engineering*

UFC 3-420-01, *Design: Plumbing Systems*

D20 1.3 DESIGN SUBMITTALS

Design Submittals shall be in accordance with Z10, *General Performance Technical Specifications*, UFGS section 01 33 10.05 20, *DESIGN SUBMITTAL PROCEDURES*, UFC 1-300-09N, *Design Procedures* and UFC 3-400-10N, *Mechanical Engineering*.

D20 1.4 CONSTRUCTION SUBMITTALS

Submit construction submittals in accordance with PTS section Z10, *General Performance Technical Specifications*. In addition to the Z10 requirements, the Designer of Record (DOR) shall approve the following construction submittals as a minimum:

Fixtures, equipment, and OMSI information for all equipment and fixtures

D2010 PLUMBING FIXTURES

Plumbing fixtures shall be provided in accordance with the IBC, IPC, and as specified.

D201001 WATER CLOSETS

D201001 1.1 FLUSH VALVE WATER CLOSETS

Refer to D201001 1.4 DUAL FUNCTION FLUSH TANK WATER CLOSETS.

D201001 1.2 DUAL FUNCTION FLUSH VALVE WATER CLOSETS

Not Applicable.

D201001 1.3 FLUSH TANK WATER CLOSETS

Refer to D201001 1.4 DUAL FUNCTION FLUSH TANK WATER CLOSETS.

D201001 1.4 DUAL FUNCTION FLUSH TANK WATER CLOSETS

ASME A112.19.2, white vitreous china, siphon-jet. Provide ASME A112.19.5 trim. Dual function flush tank water closet shall provide a manual dual flush that allows a flush of 0.8 to 1.1 GPF (3.0 to 1.6 LPF) or 1.6 GPF (6.0 LPF). Maximum flush tank volume per flush shall not exceed 1.6 GPF (6.0 LPF). Handicapped fixture mounting height and appurtenances shall be in accordance with UFAS and ADAAG.

D201002 URINALS

D201002 1.1 FLUSH VALVE URINALS

ASME A112.19.2, white vitreous china, wall-mounted, wall outlet, siphon jet, integral trap, extended side shields. Provide large diaphragm (not less than 2.625 inches (66 mm) upper chamber inside diameter at the point where the diaphragm is sealed between the upper and lower chambers) flush valve of chrome plated cast brass conforming to ASTM B 584, including vacuum breaker and angle (control-stop) valve. Provide ASME A112.19.5 trim and ASME 112.6.1 concealed chair carriers. Provide manual self-closing metering type flush valve, unless electronic flush control is specified in the ESR Section D20. Electronic flush control shall conform to UL 1951 and ASSE 1037. Handicapped fixture mounting height and appurtenances shall be in accordance with UFAS and ADAAG.

D201002 1.2 NON WATER USE URINALS

Not acceptable.

D201003 LAVATORIES

D201003 1.1 COUNTERTOP LAVATORIES

Unless integral bowl is specified elsewhere, lavatories shall be white, ASME A112.19.2 vitreous china lavatories with minimum dimensions of 20 inches (508 mm) wide x 18 inches (457 mm) front to rear, and self-rimming type. Provide ASME 112.18.1 copper alloy centerset faucets unless self closing metering or electronic control is specified in ESR section D20. Provide with aerator, adjustable P-traps, and perforated grid strainers, unless pop-up drain fittings are specified in ESR section D20.

D201003 1.2 WALL-MOUNTED LAVATORIES

ASME A112.19.1, white enameled cast-iron or ASME A112.19.2 white vitreous china with ASME A112.6.1M concealed arm carrier support, with minimum dimensions of 20 inches wide by 18 inches (508 mm wide by 457 mm) front to rear. Provide ASME 112.18.1 copper alloy centerset faucets unless self closing metering or electronic control is specified in ESR section D20.

Provide with aerator, adjustable P-traps, and perforated grid strainers, unless pop-up drain fittings are specified in ESR section D20.

D201003 1.3 HANDICAPPED LAVATORIES

Same as Paragraphs 1.1 or 1.2, except height and appurtenances shall be in accordance with UFAS and ADAAG.

D201004 SINKS

D201004 1.1 COUNTERTOP SINKS

ASME A112.19.3 sink, 20 gage stainless steel with integral mounting rim, minimum dimensions of 33 inches (840 mm) wide for two compartment or 21 inches (560 mm) wide for one compartment by 21 inches (560 mm) front to rear, with ledge back and undersides coated with sound dampening material. Provide top-mounted ASME A112.18.1 copper alloy faucets, swing spout with aerator, and stainless steel drain outlets with cup strainers. Provide adjustable P-trap with drain piping to vertical vent stack. If specified in ESR section D20, provide UL 430 waste disposer unit in right compartment.

D201004 1.2 SERVICE SINKS

ASME A112.19.1, white enameled cast-iron or ASME A112.19.2 white vitreous china, wall mounted and floor supported by wall outlet cast-iron P-trap, minimum dimensions of 22 inches (560 mm) wide by 18 inches (457 mm) front to rear with 9 inch (230 mm) splashback, and stainless steel rim guard. Provide ASME A112.18.1 copper alloy back-mounted combination faucets with vacuum breaker and 0.75 inch (20 mm) external hose threads.

D201004 1.3 MOP SINKS

Pre-cast terrazzo floor-mounted mop sink, 36 inches x 36 inches x 12 inches (914 mm x 914 mm x 305 mm) shall be made of marble chips cast in white Portland cement to a compressive strength of not less than 3625 PSI (25 mPa) 7 days after casting. Provide brass body drains with nickel bronze strainers cast integral with terrazzo. Provide stainless steel rim guard for mop sink. Provide chrome-plated exposed hot and cold water faucets ASME A112.18.1 wall-mounted copper alloy faucets swing spout with 3/4 inch (20 mm) hose connection, vacuum breaker, and pail hook. Provide mop hanger on wall above sink suitable for four mops.

D201004 1.4 LAUNDRY SINKS

IAPMO Z124.6, plastic, two-compartment, minimum dimensions of 40 inches wide by 21 inches (1016 mm wide by 533 mm) front to rear, with floor-supported steel mounting frame secured to wall. Provide ASME A112.18.1 copper alloy centerset faucets, swing spout with aerator, and stainless steel drain outlets with cup strainers, and 1.5 inch (40 mm) adjustable P-trap with drain piping to vertical vent stack.

D201005 SHOWERS/TUBS

D201005 1.1 ONE PIECE BATH AND SHOWER MODULES

IAPMO Z124.2, made of white fiberglass reinforced plastic (FRP) or acrylic with slip-resistant bathing surfaces, integral grab bar, and three walls integrally molded in one piece. Provide outlet at left or right as necessary to suit module arrangement. Provide pop-up drain fittings and adjustable P-trap. Bathtub and shower supply fittings shall be diverter type with body mounted from behind the wall. Provide tub fill over-rim

spout with diverter.

D201005 1.2 SHOWER FLOORS

Precast terrazzo or Acrylic Shower Floors: Terrazzo shall be made of marble chips cast in white Portland cement to produce a compressive strength of not less than 3625 psi (25 MPa) 7 days after casting. Provide brass body drains with nickel bronze strainers cast integral with terrazzo.

D201005 1.3 BATHTUBS

ASME A112.19.1 white enameled cast-iron or porcelain steel bathtubs, recessed type, minimum dimensions of 56 inches (1424 mm) wide by 30 inches (762 mm) front to rear by 16 inches (406 mm) high with drain outlet for above-the-floor drain installation. Bathtub and shower supply fittings shall be diverter type with body mounted from behind the wall. Provide tub over fill rim spout with diverter.

D201005 1.4 SHOWER SUPPLY FITTINGS

ASME A112.18.1, ball joint, self-cleaning, adjustable spray pattern shower heads, connected to concealed pipe connected to copper alloy pressure balance single control type mixing valves with front access integral screwdriver stops. Anchor the mixing valves and the pipe to each showerhead in wall to prevent movement.

D201005 1.5 HANDHELD SHOWER HEAD

ASSE 1014, adjustable spray hand-held shower head with swivel fitting, 60 inch (1524 mm) minimum flexible chrome plated copper alloy hose and in-line vacuum breaker. Provide push button flow control if specified in ESR section D20. Provide 25 inch (635 mm) grab bar with sliding spray holder that locks at any height.

D201006 DRINKING FOUNTAINS AND COOLERS

D201006 1.1 DRINKING FOUNTAINS

Wall mounted drinking fountain shall be constructed of white enameled cast iron with bubbler and push button control. Handicapped fixture mounting height and appurtenances shall be in accordance with UFAS and ADAAG.

D201006 1.2 ELECTRIC WATER COOLERS

AHRI 1010, wall-mounted, bubbler style air-cooled condensing unit, 4.0 gph (4.20 mL per second) minimum capacity, stainless steel splash receptor, double wall heat exchanger, and all-stainless steel cabinet. Provide ASME A112.6.1M concealed wall hangers with thru-bolts and back plates. Handicapped fixture mounting height and appurtenances shall be in accordance with UFAS and ADAAG.

D201090 EMERGENCY FIXTURES

Not Applicable.

D201090 1.1 EMERGENCY SHOWER

Not Applicable.

D201090 1.2 EMERGENCY EYE & FACE WASH

Not Applicable.

D201090 1.3 COMBINATION EMERGENCY SHOWER & EYEWASH

Not Applicable.

D2020 DOMESTIC WATER DISTRIBUTION

D202001 PIPES & FITTINGS

D202001 1.1 COPPER

Use copper tubing and fittings for pipe sizes 4 inches (100 mm) or smaller. Use type L tubing above ground with either solder fittings, or press-on copper fittings. For buried piping, use type K tubing with either solder fittings, or press-on copper fittings.

D202001 1.2 CHLORINATED POLYVINYL CHLORIDE (CPVC)

When specified in ESR section D20, provide CPVC pipe, fittings, and solvent cement per ASTM D 2846/D 2846M for sizes 4 inches (100 mm) and smaller. Provide transition union connections or threaded gate valve between metallic piping and CPVC piping.

D202002 VALVES & HYDRANTS

D202002 1.1 VALVES

Provide valves at water supplies to fixtures and to provide ease of maintenance as required in the IPC.

D202002 1.2 HOSE BIBBS & HYDRANTS

Use non-freeze wall hydrants where the winter design temperature is at or below freezing. Hose bibbs are acceptable for use elsewhere.

D202002 1.2.1 Hose bibbs

Provide angle-type, copper alloy hose bibbs with vacuum breaker.

D202002 1.2.2 Wall Hydrants

Non-freeze, ASSE 1019, cast bronze, with vacuum breaker, locking shield and tee-handle.

D202003 DOMESTIC WATER EQUIPMENT

D202003 1.1 BACKFLOW PREVENTERS

Furnish proof that each make, model/design, and size of backflow preventer being furnished for the project is approved by and has a current "Certificate of Approval" from the Foundation for Cross-Connection Control and Hydraulic Research (FCCCHR)-USC. Listing of the particular make, model/design, and size in the current FCCCHR-USC will be acceptable as the required proof. Provide freeze protection for aboveground exterior applications in areas where the winter design temperature is at or below freezing.

D202003 1.2 WATER HEATERS

D202003 1.2.1 Electric Water Heaters

Electric water heaters with double heating element per UL 174 for water heaters with less than 120 gallons of storage and 200,000 btuh input. Provide water heater per UL 1453 for commercial water heaters with 120 gallons of storage or more and 200,000 btuh input or more. Water heaters shall be equipped with glass-lined steel tanks, high efficiency type, insulated with polyurethane foam insulation, replaceable anodes, and adjustable range thermostat to allow hot water settings between 110 and 160 degrees F (43 and 71 degrees C). Water heater warranty shall be a minimum of 5 years.

D202003 1.2.2 Gas-Fired Water Heaters

Not Applicable.

D202003 1.2.3 Oil-Fired Water Heaters

Not Applicable.

D202003 1.2.4 Instantaneous Water Heater (Electric)

UL 499, heater(s) shall be of the modulating, under the sink, point-of-use type. Output temperature shall be adjustable from 40 degrees F to 160 degrees F. Heating elements shall be field replaceable. Unit(s) shall have a 10-year warranty.

D202003 1.2.5 Steam Heat Exchangers

Double wall copper tube domestic water heating elements constructed with air gap to atmosphere between the two walls using steam as the heating medium exterior of the heating elements. Provide posted operating instructions for water heaters.

D202003 1.2.6 Storage Tanks

AWWA D100, glass-lined vertical steel tanks, minimum of 125 psig (862 kPa) (gage) working pressure.

D202003 1.3 PUMPS

D202003 1.3.1 Inline Pumps

Provide in-line circulator for service water distribution system. Factory assembled and tested pumps constructed of materials suitable for hot domestic water service.

D202003 1.3.2 Base Mounted Pumps

Provide potable water service, base-mounted, end suction pumps with mechanical seals and drip-proof electric motors.

D202003 1.4 DOMESTIC WATER PRESSURE BOOSTER SYSTEM

Factory assembled, tested, and certified by a single manufacturer who assumes undivided responsibility for the system to include providing start-up services, two days instruction and furnishing related operations and maintenance manuals. Each building shall be provided with its own system. Each system will consist of a minimum of two pumps mounted on a single, welded structural steel base. Provide bladder type low-flow accumulator storage tank, lead-lag pump alternator selector switches and all related

controls and alarms required for safe and proper system operation.

D202003 1.5 EXPANSION TANKS

Steel expansion tank with polypropylene or butyl lined diaphragm at water heater.

D202003 1.6 WATER METERS

Provide AWWA C701 turbine type, with pulse width telemetry signal. register reading in U.S. gallons.

D202004 INSULATION & IDENTIFICATION

D202004 1.1 PIPING INSULATION

Provide mineral fiber insulation on domestic hot water supply and recirculation piping. Insulate domestic cold water piping with cellular glass insulation (ASTM C 552, Type II, and Type III).

D202004 1.2 PIPING & EQUIPMENT IDENTIFICATION

In addition to the requirements in Section Z10, *General Performance Technical Specification*, provide laminated plastic nameplates for valves. Stop valves in supplies to fixtures will not require nameplates. Identify above ground pipe with the type of service and direction of flow. Letter size, lengths and colors shall be per ANSI A13.1.

D202005 SPECIALTIES

D202005 1.1 WASHING MACHINE CONNECTOR BOX

Recessed wall box fabricated of painted metal. Provide bronze dual washing machine valve with single lever shut-off.

D202005 1.2 VALVE BOXES

For each buried valve provide cast-iron, ductile-iron box of a suitable size. Provide cast-iron or ductile-iron cover for the box with the word "WATER" cast on the cover.

D202005 1.3 WATER HAMMER ARRESTORS

PDI WH201, water hammer arrestors in lieu of air chambers.

D202005 1.4 ICEMAKER CONNECTOR BOX

Recessed wall box fabricated of painted metal. Provide bronze shut-off valve.

D202090 OTHER DOMESTIC WATER SUPPLY

D202090 1.1 SUPPORTS

Provide piping supports in accordance with the IPC.

D202090 1.2 INSPECTIONS

Prior to initial operation, inspect piping system for compliance with drawings, specifications, and manufacturer's submittals.

D202090 1.3 DISINFECTION

Upon completion of the installation, disinfect all systems per the IPC.

D202090 1.4 PLUMBING SYSTEMS TESTING

Upon completion of the installation test all systems per the IPC.

D2030 SANITARY WASTE

D203001 WASTE PIPE & FITTINGS

D203001 1.1 PIPING AND FITTINGS

Provide cast iron hub, spigot pipe, fittings, rubber compression gasket joints or cast-iron hubless pipe and fittings, CISPI 301 with CISPI 310 couplings. Where indicated in ESR Section D20, plastic PVC or ABS piping, fittings, and solvent cement per ASTM D 2665 or ASTM D 2661 may be provided. Plastic piping shall be equipped with approved firestopping devices as required by code.

D203001 1.2 CLEANOUTS

Provide cleanouts as required by the IPC. Material shall be consistent with the piping system materials.

D203002 VENT PIPE & FITTINGS

Provide cast-iron hubless pipe and fittings, CISPI 301 with CISPI 310 couplings. Where indicated in ESR Section D20, plastic PVC or ABS piping, fittings, and solvent cement per ASTM D 2665 or ASTM D 2661. PVC piping shall be equipped with approved firestopping devices as required by code. Single drainage/vent stack systems (such as Philadelphia system) and mechanical air admittance valves are not acceptable.

D203003 FLOOR DRAINS

Floor drains shall be flush strainer or extended rim type as required by the IPC. Provide in mechanical rooms, restrooms, fire pump room, laundry room, plumbing chase areas, and any other areas required to receive condensate from air handling equipment that is not located in the mechanical room. Provide floor sinks in kitchens.

D203004 SANITARY & VENT EQUIPMENT

D203004 1.1 PUMPS

D203004 1.1.1 Submersible Sump Pumps

Factory assembled and tested submersible type pumps for operation under water.

D203004 1.1.2 Sewage Pumps

FS A-A-50555, single or duplex type to meet demand. Duplex types shall be provided with automatic controls to alternate the operation from one pump to the other.

D2040 RAIN WATER DRAINAGE

D204001 PIPE & FITTINGS

Provide cast iron hubless pipe and fittings, CISPI 301 with CISPI 310 couplings. Where indicated in ESR Section D20, purple plastic PVC or purple ABS piping, fittings, and solvent cement per ASTM D 2665 or ASTM D 2661 may be used. Piping shall be purple in color. PVC piping shall be equipped with approved firestopping devices as required by code. Size and install piping in accordance with the IPC.

D204002 ROOF DRAINS

Roof drains shall conform to ASME A112.6.4, with dome and integral flange, and shall have a device for making a watertight connection between roofing and flashing.

D204003 RAIN WATER DRAINAGE EQUIPMENT

Where required by building design, provide expansion joint(s) of proper size to receive the conductor pipe. The expansion joint shall consist of a heavy cast-iron housing, brass or bronze sleeve.

D204004 INSULATION & IDENTIFICATION

Mineral fiber insulation on all drainage piping that may be subject to condensation. Provide a vapor retarder.

D2090 OTHER PLUMBING SYSTEMS

D209001 SPECIAL PIPING SYSTEMS

D209001 1.1 NATURAL GAS PIPING

Not available on MCAS Cherry Point.

D209002 ACID WASTE SYSTEMS

Acid-resistant DWV pipe, fittings, and couplings with mechanical, bell and spigot, or fusion type joints. Material for buried piping and aboveground piping shall be silicon-iron composition. Borosilicate glass pipe and fitting may be provided for aboveground piping where acid composition dictates, except vent piping through and above roofs shall be silicon-iron composition. Provide cleanouts and drains as specified for DWV piping, except material shall be silicon-iron composition.

D209003 INTERCEPTORS

D209003 1.1 OIL/WATER SEPARATOR

Oil/water separator, where required, in accordance with the IPC and with a minimum flow capacity to meet system demand.

D209003 1.2 GREASE INTERCEPTORS

Provide in accordance with the IPC and PDI G 101.

D209005 COMPRESSED AIR SYSTEM (NON-BREATHING)

D209005 1.1 AIR COMPRESSOR

Not Applicable.

D209005 1.2 REFRIGERATED AIR DRYER

Not Applicable.

D209005 1.3 COMPRESSED AIR PIPING SYSTEM

Not Applicable.

-- End of Section --

SECTION D30

HVAC
1/10

D30 GENERAL

D30 1.1 NARRATIVE

This section includes the construction of interior mechanical systems. This section covers installations inside the facility and out to the five foot line. See Section G30, *Site Civil/Mechanical Utilities*, for continuation of systems beyond the five-foot line.

D30 1.2 MECHANICAL DESIGN GUIDANCE

Provide the design and installation in accordance with the following references. This Performance Technical Specification (PTS) adds clarification to the fundamental requirements contained in the following Government Standards. The general requirements of this PTS section are located in PTS Section Z10, *General Performance Technical Specification*.

D30 1.2.1 Government Standards

Federal Energy Management Program (FEMP)

UNIFIED FACILITIES CRITERIA (UFC)

UFC 3-400-10N, *Mechanical Engineering*

UFC 3-420-01, *Plumbing Systems*

UNIFIED FACILITIES GUIDE SPECIFICATIONS (UFGS)

UFGS 01 78 24.05 20, *Facility Operation and Maintenance Support Information*

UFGS 23 05 93, *Testing, Adjusting, and Balancing for HVAC*

UFGS 23 09 23.13 20, *BACNET Direct Digital Control Systems for HVAC*

UFGS 23 81 23.00 20, *Computer Room Air Conditioning Units*

D30 1.3 PERFORMANCE VERIFICATION AND ACCEPTANCE TESTING

a. Verification of satisfactory HVAC system performance shall be via Performance Verification Testing, as detailed in this section.
b. The Government reserves the right to witness all Acceptance Tests and Inspections, review data, and request other such additional inspections and repeat tests as necessary to ensure that the system and provided services conform to the stated requirements.

c. The Qualified Testing Organization shall provide the Acceptance Tests and Inspections test plan and perform the acceptance tests and inspections. Test methods, procedures, and test values shall be performed and evaluated in accordance with appropriate standards, and the manufacturer's recommendations. Equipment shall be placed in service only after completion of required tests and evaluations of the test results have been completed. Contractor shall supply to the testing organization complete sets of shop drawings, settings of adjustable devices, and other information necessary for an accurate test and inspection of the system prior to the performance of any final testing. Perform acceptance tests and inspections on Computer Room Air Conditioning Units, Direct Digital Control System, and HVAC Testing/Adjusting/Balancing.

D30 1.4 HVAC COMMISSIONING

Commission the HVAC systems per the Commissioning Plan as required by UFGS Specification Section 01 45 00.05 20, *DESIGN AND CONSTRUCTION QUALITY CONTROL* and Specification Section 23 08 00.00 10 *COMMISSIONING OF HVAC SYSTEMS*. The Designer of Record shall prepare UFGS Specification Section 23 08 00.00 10 as a part of the project specification and shall include the prepared specification section in the design submittal for the project. HVAC system commissioning shall coordinate with and incorporate the testing, reporting, training and O & M documentation requirements of UFGS 23 05 93, *TESTING, ADJUSTING, AND BALANCING FOR HVAC* and UFGS 23 09 23.13 20, *BACnet DIRECT DIGITAL CONTROL SYSTEMS FOR HVAC*.

D30 1.5 DESIGN SUBMITTALS

Design Submittals shall be in accordance with Z10, *General Performance Technical Specifications*, UFGS section 01 33 10.05 20, *DESIGN SUBMITTAL PROCEDURES*, UFC 1-300-09N, *Design Procedures*, UFC 3-400-10N, *Mechanical Engineering*.

In addition, UFGS sections listed below or in the body of the PTS text are to be used by the Designer of Record (DOR) as a part of the design submittal. If the UFGS products or systems are applicable to the project, the DOR shall edit these referenced UFGS sections and submit them as a part of the design submittal specification. Edit the specification sections in accordance with the limitations stated in PTS section Z10, *General Performance Technical Specifications*.

UFGS 01 78 24.05 20, *FACILITY OPERATION AND MAINTENANCE SUPPORT INFORMATION*

UFGS 23 05 93, *TESTING, ADJUSTING, AND BALANCING FOR HVAC*

UFGS 23 08 00.00 10, *COMMISSIONING OF HVAC SYSTEMS*

UFGS 23 09 23.13 20, *BACnet DIRECT DIGITAL CONTROL SYSTEMS FOR HVAC*

D30 1.6 CONSTRUCTION SUBMITTALS

Submit construction submittals in accordance with PTS section Z10, *General Performance Technical Specifications*. In addition to the Z10 requirements, the Designer of Record (DOR) shall approve the following construction submittals as a minimum:

OMSI manual for all equipment and fixtures

D30 1.7 MOTORS

Single-phase fractional-horsepower alternating-current motors shall be high efficiency types corresponding to the applications listed in NEMA MG 11. Select polyphase motors based on high efficiency characteristics relative to the applications as listed in NEMA MG 10. Additionally, all polyphase squirrel-cage medium induction motors with continuous ratings shall meet or exceed energy efficient ratings per Table 12-10 of NEMA MG 1. Provide controllers for 3-phase motors rated 1 hp (0.75 kW) and above with phase voltage monitors designed to protect motors from phase loss and over/under-voltage. Provide means to prevent automatic restart by a time adjustable restart relay. For packaged equipment, the manufacturer shall provide controllers including the required monitors and timed restart. Provide reduced voltage starters for all motors 25 hp and larger.

D3010 ENERGY SUPPLY

D301001 OIL SUPPLY SYSTEM

Not Applicable.

D301001 1.1 OIL SUPPLY SYSTEM PIPING & EQUIPMENT

Not Applicable.

D301002 GAS SUPPLY SYSTEM

D301002 1.1 NATURAL GAS PIPING

Not available at MCAS Cherry Point.

D301002 1.2 MATERIALS AND EQUIPMENT

D301002 1.2.1 Aboveground Within Buildings

Not applicable.

D301002 1.3 PRESSURE TESTS

Not applicable.

D301002 1.4 PROPANE PIPING

Not applicable.

D301002 1.4.1 Underground

Not Applicable.

D301002 1.5 PROPANE TANKS

Not recommended.

D301003 STEAM SUPPLY SYSTEM (FROM CENTRAL PLANT)

Refer to Section G30, *Site Civil/Mechanical Utilities*

D301004 HOT WATER SUPPLY SYSTEM (FROM CENTRAL PLANT)

Refer to Section G30, *Site Civil/Mechanical Utilities*

D3020 HEAT-GENERATING SYSTEMS

D302001 BOILERS

Not applicable.

D302001 1.1 REQUIREMENTS
Not applicable.

D302001 1.2 BOILER BURNER

Not applicable.

D302001 1.3 BOILER TRIM AND CONTROL EQUIPMENT

D302001 1.3.1 Boiler Controls
Not applicable.

D302001 1.3.2 Boiler Trim
Not applicable.

D302001 1.3.3 Pressure Gages
Not applicable.

D302001 1.3.4 Thermometers
Not applicable.

D302001 1.3.5 Drain Trapping

Not applicable.

D302001 1.3.6 Air Vent Valve

Not applicable.

D302001 1.4 STEAM BOILERS

Not Applicable.

D302001 1.4.1 Pressure Gages

Not Applicable.

D302001 1.4.2 Thermometers

Not Applicable.

D302001 1.5 BOILER STACK AND ACCESSORIES

Not applicable.

D302001 1.6 BOILER STARTUP AND OPERATIONAL TESTS

D302001 1.6.1 Boiler Cleaning

Not applicable.

D302001 1.6.2 Operational Tests

Not applicable.

D302003 FUEL-FIRED UNIT HEATERS

D302003 1.1 GAS-FIRED UNIT HEATERS

Not applicable.

D302003 1.2 INFRARED HEATERS
Not applicable.

D302004 AUXILIARY EQUIPMENT

D302004 1.1 HEAT EXCHANGERS

Provide steam to hot water converter as required for the application. Provide factory assembled, u-tube units constructed in accordance with ASME BPVC for steam or hot water. Factory-assembled, plate type heat exchangers may be provided for hot water.

D302004 1.2 CONDENSATE RETURN UNITS

Not applicable.

D302005 EQUIPMENT THERMAL INSULATION

Insulate hot water pumps and equipment as suitable for the temperature and service in rigid block, semi-rigid board, or flexible unicellular insulation to fit as closely as possible to equipment.

D3030 COOLING GENERATING SYSTEMS

If coatings are indicated in ESR Section D30, provide with copper tube/copper fin construction or immersion applied, baked phenolic or other approved coating that passes the 3000 hour salt spray resistance test using the ASTM B117 procedure. Field applied coatings are not acceptable.

D303001 CHILLED WATER SYSTEMS

D303001 1.1 AIR-COOLED CHILLERS

Air-cooled chillers (one per BEQ Building) shall be type indicated in Project Program and meet the requirements of AHRI 550/590. Provide control panel with the manufacturers' standard controls and protection circuits. If DDC system is required in project, provide a control interface for remote monitoring of the chiller's operating parameters, functions and alarms from the DDC control system central workstation.

D303001 1.1.1 Stages

Provide minimum of four stages of unloading at 25% per stage minimum for reciprocating and scroll chillers. Provide reciprocating units with hot gas bypass.

D303001 1.1.2 Pressure Control

Provide head pressure control for cold temperature operation. Provide freeze protection for chiller and piping.

D303001 1.1.3 Coil Construction

Provide copper tube, aluminum fins for condenser coils. Provide manufacturer's optional louvered covers or hail guards for condenser coils to provide protection against vandalism, debris, or hail.

D303001 1.2 WATER-COOLED CHILLERS

Not applicable.

D303001 1.3 COOLING TOWERS

Not applicable.

D303001 1.4 CLOSED CIRCUIT COOLERS

Not applicable.

D303002 DIRECT EXPANSION SYSTEMS

If coatings are indicated in ESR Section D30, provide with copper tube/copper fin construction or immersion applied, baked phenolic or other approved coating that passes the 3000 hour salt spray resistance test using the ASTM B117 procedure. Field applied coatings are not acceptable.

D303002 1.1 HEAT PUMPS

D303002 1.1.1 Air to Air

Provide air-cooled, split-system heat pumps with ducted air distribution. Provide units factory assembled, designed, tested, and rated in accordance with AHRI 210/240 or AHRI 340/360. Provide manufacturer's minimum recommended clearance around condensing units. Refrigerant piping size shall be per the manufacturer's recommendations. Insulate refrigerant piping suction lines and condensate drain.

D303002 1.1.2 Water Source

Factory assembled, designed, tested, and rated in accordance with AHRI 210/240 or AHRI 340/360.

D303002 1.1.3 Ground-Coupled

Factory assembled, designed, tested, and rated in accordance with AHRI 330. Ground-coupled heat pumps shall be connected to the heat exchanger by a closed loop ground source vertical well field. Design and installation of each well field shall comply with IGSHPA and ASHRAE Standards.

D303002 1.2 CONDENSING UNITS

Provide air-cooled, split-system air conditioner with ducted air distribution. Provide units factory assembled, designed, tested, and rated in accordance with AHRI 210/240 or AHRI 340/360. Provide manufacturer's minimum recommended clearance around condensing units. Refrigerant piping size shall be per the manufacturer's recommendations.

D303002 1.3 DX VARIABLE AIR VOLUME (VAV) UNITS

Not Applicable.

D303002 1.4 DUCTLESS SPLIT SYSTEM

Air-cooled, ductless split system. Provide units factory assembled, designed, tested, and rated in accordance with ARI 210/240. Provide manufacturer's minimum recommended clearance around heat pump or condensing units. Refrigerant piping size shall be per the manufacturer's recommendations. Insulate refrigerant piping suction lines and condensate drain.

D3040 DISTRIBUTION SYSTEMS

D304001 AIR DISTRIBUTION, HEATING & COOLING

D304001 1.1 DUCTWORK

Except as specified herein, provide ductwork constructed, braced, reinforced, installed, supported, and sealed per SMACNA standards.

D304001 1.1.1 Flexible Ducts

Use insulated flexible duct only for connections to air distribution devices to adapt to minor offsets. Flexible duct shall be UL 181 listed and per SMACNA 1966 duct construction standards with a minimum R value of 4. Maximum length of flexible ductwork shall be 6 feet (2 meters).

D304001 1.1.2 Flexible Connections

Provide flexible connectors between fans and ducts.

D304001 1.1.3 Volume Dampers

Provide manual volume dampers in each branch take-off from the main duct to control air quantity except for primary supply ductwork on VAV systems. Dampers shall conform to SMACNA 1966 duct construction standards and shall be seal class "A" construction.

D304001 1.1.4 Fire Dampers

Fire dampers shall be rated per UL 555. Fire dampers shall be dynamic type rated for closure against a moving airstream. Provide fire dampers that do not intrude into the air stream when in the open position.

D304001 1.1.5 Smoke Dampers

Smoke dampers shall be rated per UL 555S.

D304001 1.1.6 Sound Attenuators

Fabricated attenuators that will reduce the rated sound pressure level of the fan down to at least 65 decibels in the 250 Hz (third octave band) center frequency by using a reference sound source calibrated in decibels of sound power at 10 to 12 watts. Maximum permissible pressure drop shall not exceed 0.63 inch of water (157 Pa).

D304001 1.2 LOUVERS & HOODS

D304001 1.2.1 Louvers

Louvers shall bear AMCA ratings seal for air performance and water penetration in accordance with AMCA 500L and AMCA 511. Louvers shall be constructed of anodized aluminum alloy or stainless steel. Provide birdscreens.

D304001 1.2.2 Hoods

Hoods shall be constructed of anodized aluminum alloy or stainless steel. Provide with birdscreens.

D304001 1.3 GRILLES, REGISTERS, & DIFFUSERS

Provide factory-finished grilles, registers, and diffusers. Exterior and exposed edges shall be rolled, or otherwise stiffened and rounded.

D304001 1.4 INSULATION

Provide external thermal insulation for all ductwork. Insulate ductwork in concealed spaces with blanket flexible mineral fiber. Insulate ductwork in Mechanical Rooms and exposed locations with rigid mineral fiber insulation.

Provide insulation with factory applied all-purpose jacket with integral vapor retarder. In exposed locations, provide a jacket with white surface suitable for painting. Flame spread/smoke developed rating for all insulation shall not exceed 25/50. Minimum insulation thickness shall be the minimum thickness required by ASHRAE 90.1. Insulate the backs of all supply air diffusers with blanket flexible mineral fiber insulation.

D304001 1.5 VAV BOXES

Pressure-independent type variable air volume units rated per AHRI 880. Boxes shall not be allowed to fully shut-off. Provide each box with a heating coil unless not required by space reheat or heating. Provide electronic controls.

D304001 1.6 VARIABLE AIR VOLUME VAV FAN-POWERED UNITS

Pressure-independent, fan powered, VAV units rated per AHRI 880 and UL listed. Provide each box with a heating coil. Provide electronic controls with speed controller, discharge volume control damper(s), and return/recirculation air frame and filter. If discharge dampers are not provided with the unit, coordinate installation with the sheet metal contractor. Insulate in accordance with ASHRAE 90.1.

D304002 STEAM DISTRIBUTION SYSTEMS

D304002 1.1 STEAM PIPING

Steam piping shall be ASTM A 53/A 53M or ASTM A 106/A 106M, Grade B, Schedule 40, black steel, electric-resistance welded or seamless.

D304002 1.2 CONDENSATE RETURN PIPING

Condensate return piping shall be ASTM A 53/A 53M or ASTM A 106/A 106M, Grade B, Schedule 80, black steel, electric-resistance welded or seamless.

D304002 1.3 STEEL PIPE FITTINGS

For piping 2 inch (50 mm) and smaller, provide ASME B16.3 malleable iron

screwed fittings or ASME B16.11 socket welding (Class 3000) or threaded type (Class 2000). Provide ASME B16.9 butt-welding fittings or ASME B16.5 flanged type for piping 2-1/2 inch (63 mm) and larger.

D304002 1.4 INSULATION

Insulate steam and condensate return piping with mineral fiber or cellular glass insulation with all-purpose jacket.

D304002 1.5 STEAM PRESSURE REDUCING STATION

For each building, provide steam pressure reducing station(s).

D304002 1.6 STEAM TRAPS

Provide steam traps and accessories in accordance with UFC 3-400-10N.

D304003 HOT WATER DISTRIBUTION SYSTEMS

D304003 1.1 HOT WATER PIPING

Hot water piping shall be electric resistance welded or seamless Schedule 40 black steel pipe conforming to ASTM A 53/A 53M. Piping 4 inch (100 mm) and smaller may be ASTM B 88 Type K or L copper.

D304003 1.2 STEEL PIPE FITTINGS

For piping 2 inch (50 mm) and smaller, provide ASME B16.3 malleable iron screwed fittings or ASME B16.11 socket welding (Class 3000) or threaded type (Class 2000). Provide ASME B16.9 butt-welding fittings or ASME B16.5 flanged type for piping 2-1/2 inch (63 mm) and larger. Grooved joint pipe coupling systems of appropriate pressure rating are acceptable in lieu of welded or screwed fittings.

D304003 1.3 COPPER FITTINGS

ASME B16.18 cast bronze solder joint type or ASME B16.22 wrought copper solder joint type.

D304003 1.4 ISOLATION VALVES

Provide isolation valves on supply and return lines at take-offs for service to each building(s). Valves shall be located in valve boxes.

D304003 1.5 INSULATION

Insulate hot water piping with mineral fiber insulation with factory-applied all-purpose jacket. Provide aluminum metal wrap over insulation for all exterior piping.

D304003 1.6 VALVES

Provide shut off valves, appropriately sized relief valves, and appropriately sized balancing valves as necessary to balance water flows, protect components and isolate equipment for service and repairs.

D304003 1.7 APPURTENANCES

Provide appurtenances such as air separators, expansion tanks, suction diffusers, strainers, and other required features to allow for proper operation of hot water systems.

D304003 1.8 TEST PORTS

Provide test ports in piping at inlet and outlet of all major system components including boilers, pumps, and other equipment as required.

D304004 CHANGEOVER DISTRIBUTION SYSTEMS

Provide as specified for Hot Water Distribution Systems see D304003.

D304005 GLYCOL DISTRIBUTION SYSTEMS

Provide as specified for Chilled Water Distribution Systems see D304006.

D304006 CHILLED / CONDENSER WATER DISTRIBUTION SYSTEMS

D304006 1.1 ABOVEGROUND CHILLED AND CONDENSER WATER PIPING

Aboveground chilled water piping shall be electric resistance welded or seamless Schedule 40 black steel pipe conforming to ASTM A 53/A 53M. Piping 4 inch (100 mm) and smaller may be ASTM B 88 Type K or L copper.

D304006 1.2 STEEL PIPE FITTINGS

For piping 2 inch (50 mm) and smaller, provide ASME B16.3 malleable iron screwed fittings or ASME B16.11 socket welding (Class 3000) or threaded type (Class 2000). Provide ASME B16.9 butt-welding fittings or ASME B16.5 flanged type for piping 2-1/2 inch (63 mm) and larger.

D304006 1.3 COPPER FITTINGS

ASME B16.18 cast bronze solder joint type or ASME B16.22 wrought copper solder joint type.

D304006 1.4 ISOLATION VALVES

Provide isolation valves on supply and return lines at take-offs for service to each building(s). Valves shall be located in valve boxes.

D304006 1.5 INSULATION

Insulate chilled water pumps and accessories for the temperature and service in rigid block, semi-rigid board, or flexible unicellular insulation to fit as closely as possible to equipment. Insulate above ground chilled water piping with cellular glass insulation (ASTM C 552, Type II, and Type III). Provide all-purpose jacket with vapor retarder. Provide aluminum metal wrap over insulation for all exterior piping.

D304006 1.6 VALVES

Provide shut off valves, appropriately sized relief valves, and appropriately sized balancing valves as necessary to balance water flows, protect components and isolate equipment for service and repairs.

D304006 1.7 TEST PORTS

Provide test ports in piping at inlet and outlet of all major system components including chillers, pumps, and other equipment as required.

D304007 EXHAUST SYSTEMS

D304007 1.1 FANS

Fans shall be AMCA 210 certified, with AMCA seal. Fan bearings shall have a minimum average life of 200,000 hours at design operating conditions. Provide bird screens for outdoor inlets and outlets. Provide direct-drive type fans with means for verifying operation via the building DDC system or with speed controllers

D304007 1.2 IN-LINE FANS

Provide UL-Listed centrifugal fans.

D304007 1.3 WALL FANS

Propeller fans with fan guards. Provide centrifugal fans with backdraft dampers and wall bracket.

D304007 1.4 ROOFTOP FANS

UL-Listed centrifugal fans with roof curb.

D304007 1.5 UTILITY SETS

AMCA 210 with AMCA seal.

D304007 1.6 BATHROOM FANS

UL 507 and UL-listed, Home Ventilating Institute (HVI) certified and with AMCA seal for ceiling installation.

D304007 1.7 RANGE HOODS

UL 507 and UL-listed, with AMCA seal, range hood with light over stove. Minimum fan capacity shall be 160 cfm with maximum sound level of 5.6 sones.

D304008 AIR HANDLING UNITS

AMCA 210 certified fans with AMCA seal. Fan bearings shall have a minimum average life of 200,000 hours at design operating conditions. Provide bird screens for outdoor inlets and outlets.

D304008 1.1 CENTRAL STATION AIR HANDLERS

Modular construction, double wall air handling units with minimum of 1 inch (25 mm) casing insulation. Provide AHRI 430 certified fans and AHRI certified coils. Provide stainless steel, positive draining condensate drain pan. For 100% outside air units provide capability for cooling, heating, dehumidification and reheat.

D304008 1.1.1 Ultraviolet Disinfection System

Not applicable.

D304090 OTHER DISTRIBUTION SYSTEMS

D304090 1.1 PUMPS

Centrifugal circulating pumps with motor, motor starter, and motor enclosure conforming to the appropriate NEMA standards. Provide suction diffusers on base-mounted pumps. Insulate pumps used for hot service and chilled water service.

D304090 1.1.1 In-Line Pumps

Pumps constructed of manufacturer's standard materials suitable for chilled, condenser, and hot water heating systems.

D304090 1.1.2 Base Mounted Pumps

Single stage end suction pumps suitable for chilled, condenser, and hot water heating systems.

D304090 1.2 VARIABLE FREQUENCY DRIVES (VFD)

Factory-assembled variable frequency drive control systems for variable speed control. All air-handling unit and pump VFDs shall be from the same manufacturer. Each VFD shall include motor starter, motor disconnects and controls as required for a complete system. Units shall be UL-listed and comply with the National Electric Code.

Provide the following accessories:

Disconnect switch

Control circuit transformer, with primary and secondary fuses

Manual bypass

System hand-off auto switch with provisions for remote start/stop of the system.

System initialized light

Run light

Failure alarm

LCD digital display with numeric keypad

Provide a control interface for remote monitoring of VFD functions and alarms from the DDC control system computer.

D304090 1.3 CHILLED WATER AND HOT WATER AIR SEPARATORS

ASME rated air separators with tangential inlet and outlet connections and automatic air vent.

D304090 1.4 SOLIDS SEPARATORS

Provide centrifugal solids separator with automatic drain in open systems.

D304090 1.5 EXPANSION TANKS

ASME rated expansion tanks with polypropylene or butyl diaphragm or compression tanks as indicated in UFC 3-400-10N.

D304090 1.6 MAKE-UP WATER STATION

Station shall consist of a water pressure-reducing valve, filter and relief valve in the make-up water line to the chilled and hot water systems to maintain the operating pressure. Provide a 3/4 inch (20 mm) globe valve by-pass around this pressure reducing station. Provide reduced pressure

backflow preventer upstream of the by-pass.

D304090 1.7 GLYCOL MAKE-UP STATION

If required, provide a glycol makeup system to maintain system proper operating mixture.

D304090 1.8 CONDENSATE DRAIN PIPING

Provide ASTM B 88, Type L, hard-drawn copper.

D304090 1.9 CONDENSATE DRAIN INSULATION

Insulate condensate drain piping with flexible cellular insulation.

D304090 1.10 CHEMICAL TREATMENT

If required, Provide chilled and hot water systems with automatic chemical treatment system for the control of pH, scale formation, and corrosion inhibition. Provide shot-type feeders for manual chemical feed. Feeders shall be rated for use with pressures up to 130 PSI (900 kPa) (gage). Provide condenser water systems with automatic chemical treatment systems that monitor conductivity, and pH, and provide for water metering and bleed-off. Provide chemicals in accordance with EPA and equipment manufacturer’s recommendations.

D304090 1.11 PIPING IDENTIFICATION

Provide piping identification labels or Stencil names or code letters for piping systems in clearly visible letters and symbols. Provide arrow-shaped markings to indicate direction of flow.

D304090 1.12 PIPE SLEEVES

Provide pipe sleeves at each wall and floor penetration. The sleeve shall be of a material suitable to protect the carrier pipe (two pipe sizes larger) and sealed with an appropriate flexible material. Provide fire stopping in fire rated walls in accordance with IBC.

D304090 1.13 SYSTEM FLUSHING

Thoroughly flush hydronic systems prior to system startup. Isolate coils during initial flushing until water is clear.

D304090 1.14 HEAT TAPE

UL-Listed, self-regulating, heat tape on piping subject to freezing.

D3050 TERMINAL & PACKAGE UNITS

D305002 UNIT HEATERS

Not Applicable. See D302004 for gas fired unit heaters.

D305002 1.1 STEAM

Provide UL-Listed, factory-assembled, unit heaters.

D305002 1.2 HOT WATER

Provide UL-Listed, factory-assembled, unit heaters.

D305002 1.3 CABINET UNIT HEATER

Provide UL-Listed, factory-assembled, heaters.

D305003 FAN COIL UNITS

UL-Listed, factory-assembled and tested fan coils, AHRI 440 and AHRI certified.

D305004 FIN TUBE RADIATION

D305004 1.1 FIN TUBE RADIATORS AND CONVECTORS

Fin tube radiators and Convectors shall be provided with copper tubes and aluminum fins. Provide normally open, spring return control valves.

D305005 ELECTRIC HEATING

D305005 1.1 UNIT HEATERS

Provide factory-assembled, UL-1025, unit heaters.

D305005 1.2 BASEBOARD HEATERS

Provide factory-assembled, UL-1042, heaters.

D305005 1.3 WALL HEATERS
Not Applicable.

D305005 1.4 INFRARED HEATERS

Not Applicable.

D305006 PACKAGE UNITS

D305006 1.1 ROOFTOP AIR HANDLERS

Not applicable.

D305006 1.2 DUCT HEATER

Not applicable.

D3060 CONTROLS AND INSTRUMENTATION

D306001 HVAC CONTROLS

D306001 1.1 DIRECT DIGITAL CONTROLS

Provide one of the following as directed in ESR Section D30.

a. Provide Direct Digital Controls (DDC) to comply with the requirements specified in UFGS Section 23 09 23.13 20, *BACnet DIRECT DIGITAL CONTROL SYSTEMS FOR HVAC*. The Designer of Record shall prepare UFGS Specification Section 23 09 23.13 20 as a part of the project specification and shall include the prepared specification section in the design submittal for the project.

D306001 1.2 INSTRUMENT PANELS

D306001 1.2.1 Equipment Controllers

DDC hardware shall be UL-916 rated. Use controllers in a distributed control manner. Controllers shall be stand alone with an internal clock and modem. The total number of I/O hardware points shall not exceed 48 in any controller. Provide sufficient memory for each controller to support required control, communication, trends, alarms, and messages. Provide communications ports for controller to controller, on-site interface, remote workstation interface, and telecommunications interface.

D306002 ELECTRONIC CONTROLS

If required, provide programmable thermostats with built in keypads for scheduling of day and night temperatures with two setback periods per day. Provide independent summer and winter programs. Thermostats shall have temporary and manual override of schedule and battery backup.

D3070 SYSTEMS TESTING AND BALANCING

D3070 1.1 HVAC SYSTEM

Provide HVAC systems testing and balancing that complies with the requirements specified in UFGS Specification Section 23 05 93, *TESTING, ADJUSTING, AND BALANCING FOR HVAC*. The Designer of Record shall prepare UFGS Specification Section 23 05 93, as a part of the project specification and shall include the prepared specification section in the design submittal for the project.

D3090 OTHER HVAC SYSTEMS AND EQUIPMENT

D309001 GENERAL CONSTRUCTION ITEMS

D309001 1.1 SEISMIC DESIGN

Provide in accordance with UFC 3-400-10N, *Mechanical Engineering*.

D309002 REFRIGERATION SYSTEMS

D309090 OTHER SPECIAL MECHANICAL SYSTEMS

D309090 1.1 ENERGY RECOVERY WHEELS

Total energy (enthalpy) type energy recovery wheels (heat wheels). Media shall be aluminum or a lightweight polymer coated with a corrosion-resistant finish. Etched or oxidized surfaces are not acceptable. Heat transfer surfaces shall be coated with a non-migrating (permanently bonded) absorbent specifically developed for the selective transfer of water vapor. Equal sensible and latent recovery efficiencies shall be documented through a certification program conducted per ASHRAE 84 and AHRI 1060. The energy recovery wheel shall have an insulated housing of double wall construction, rotor seals that are specifically designed to limit cross-contamination, and a rotation detector. Should rotation stop, the rotation detector shall alarm the HVAC control system. Filter sections shall be readily accessible for maintenance.

D309090 1.2 HEAT PIPES

Factory fabricated, assembled and tested heat pipes with counter-flow arrangement. Provide hermitically sealed, seamless aluminum tube cores with extended surfaces. Heat exchanger frame shall be constructed of not less than 16-gage galvanized steel and fitted with intermediate tube supports, and flange connections. Provide tube end covers and a partition of galvanized steel to separate exhaust and supply air streams without cross-contamination. A refrigerant shall be used as the working fluid. Type I refrigerants are not allowed.

-- End of Section --

SECTION D40

4/08

D40 GENERAL

D40 1.1 DESIGN GUIDANCE

Provide the design and installation of fire protection systems in accordance with the following references. This Performance Technical Specification (PTS) adds clarification to the fundamental requirements contained in the following Government Standards. The general requirements of this PTS section are located in PTS Section Z10, *General Performance Technical Specification.*

D40 1.2 QUALITY ASSURANCE

Materials and assemblies installed in the work shall be inspected and found to be in compliance with industry standards and these specifications prior to acceptance of the work. Items found not to be in compliance shall be removed or corrective measures taken, to assure compliance with the referenced standard.

Qualifications, Training Plans, and Test Plans and Procedures indicated herein, shall be submitted 45 calendar days prior to the expected date of execution. Notify the Contracting Officer 14 calendar days prior to all testing. Submit test results within 7 calendar days of completion of testing.

D40 1.2.1 Qualified Workers

D40 1.2.1.1 Fire Protection Designer of Record

Services and qualifications of the FPDOR shall be as specified in UFC 3-600-01 and UFC 3-600-10N. The FPDOR shall review and approve all fire protection engineering submittals.

D40 1.2.1.2 Fire Protection Engineering Technicians

Workers required herein to be certified by the National Institute for Certification in Engineering Technologies (NICET) as an engineering technician in the Fire Protection Engineering Technology program shall be thoroughly trained and experienced, and completely familiar with the specified requirements and the methods needed for proper performance of the work in this section. All documentation required to be submitted for record and/or approval shall include the NICET engineering technician's signature, along with the technician's current NICET certification number, certification subfield, and level.

Installation drawings, shop drawings or working plans, calculations, other required pre-construction documentation and as-built drawings shall be prepared by, or under the direct supervision of a NICET engineering technician as specified in Section 6 D40 of Part 3.

D40 1.2.1.3 Qualified System Installers

Fire Suppression System and Fire Alarm System installers shall be regularly engaged in the installation of the type and complexity of system specified in the Contract documents, and shall have served in a similar capacity for at least three systems that have performed in the manner intended for a period of not less than 6 months.

Installers of Chlorinated Poly Vinyl Chloride (CPVC) sprinkler systems shall be certified by the manufacturer and maintain a copy of their certification on hand at all times.

D40 1.2.1.4 Fire Protection QC Specialist

The Fire Protection (FP) QC Specialist shall be a U.S. Registered Fire Protection Engineer (FPE) and shall be an integral part of the Prime Contractor's Quality Control Organization. This FPE shall have no business relationships (owner, partner, operating officer, distributor, salesman, or technical representative) with any fire protection equipment device manufacturers, suppliers or installers for any such equipment provided as part of this project. The Fire Protection Designer of Record (FPDOR) may serve as the FPQC Specialist provided the following qualifications are met.

a. Qualifications/Experience: The FPQC Specialist shall have obtained their professional registration by successfully completing the Fire Protection Engineering discipline examination. This FPE shall have a minimum of 5 years full time and exclusive experience in every aspect of facility design and construction as it relates to fire protection, which includes, but is not limited to, building code analysis, life safety code analysis, design of automatic detection and suppression systems, passive fire protection design, water supply analysis, and a multi-discipline coordination reviews, and construction surveillance.
b. Area of Responsibility: The FPQC Specialist is responsible for assuring the proper construction and installation of life safety and fire protection features across all disciplines and trades. The FPQC Specialist shall be responsible for assuring that life safety and fire protection features are provided in accordance with the design documents, approved construction submittals, and manufacturer's requirements. Examples include, but are not limited to, water distribution systems including fire pumps and fire hydrants, fire resistive assemblies such as spray-applied fire proofing of structural components and fire rated walls/partitions, fire alarm and detection systems, fire suppression and standpipe systems, and emergency and exit lighting fixtures.

c. Construction Surveillance: The FPQC Specialist shall visit the construction site as necessary to ensure life safety and fire protection systems are being constructed, applied, and installed in accordance with the approved design documents, approved construction submittals, and manufacturer's requirements. Frequency and duration of the field visits are dependent upon particular system components, system complexity, and phase of construction. At a minimum, field visits shall occur just prior to installation of suspended ceiling system to inspect the integrity of passive fire protection features and fire suppression system piping, preliminary inspections of fire alarm/detection and suppression systems, and final acceptance testing of fire alarm/detection and suppression systems. The FPQC Specialist shall prepare a written report detailing compliance of any outstanding submittal review comments, summarizing the results of all tests, detailing all discrepancies discovered, corrective action taken, all forms as required by the respective NFPA codes, and recommendations/certifications for acceptance. Forward one copy of the report with attachments to the Naval Facilities Engineering Command Fire Protection Engineer.

D40 1.2.2 Performance Verification Testing

All systems shall have operational tests to demonstrate compliance with contract requirements and respective NFPA codes, International Building Code and as noted below. Test procedures shall be in full compliance with the respective NFPA codes, the equipment manufacturer recommendations, and UFC 3-600-10N. Provide all personnel, equipment, and materials for tests. Return trips to witness repeat acceptance tests due to failure of previous tests will be at the Contractor’s expense.

D40 1.2.2.1 Preliminary Inspections and Final Acceptance Testing

The FPQC Specialist shall personally witness all preliminary inspections of fire alarm/detection and suppression systems. Once preliminary inspections have been successfully completed, the FPQC Specialist shall submit a signed certificate to the QC Manager that systems are ready for final inspection and testing. The Naval Facilities Engineering Command Fire Protection Engineer will witness formal tests and approve all systems before they are accepted. The QC Manager shall submit the request for formal inspection at least 15 days prior to the date the inspection is to take place. The QC manager shall provide 10 days advance notice to the Contracting Officer and the activity Fire Inspection Office of scheduled final inspections.

D40 1.2.2.2 Final Life Safety/Fire Protection Certification

The FPQC Specialist shall provide certification that all life safety and fire protection systems have been installed in accordance with the contract documents, approved submittals, and manufacturer's requirements. This certification shall summarize all life safety and fire protection features, and shall bear the professional seal of the FPQC Specialist.

D40 1.2.2.3 System Manufacturers Representatives

The systems manufacturer technical representative shall be present for the final inspection and test for the following systems: fire alarm and detection, fire pump, carbon dioxide, foam generating and clean agent extinguishing.

D40 1.2.2.4 Fire Suppression Water Supply and Equipment

The fire hydrants shall be inspected prior to backfilling the trench surrounding the fire hydrants. A report, including pictures, shall be provided to the Contracting Officer.

Fire pump tests shall be conducted in the presence of the pump, controller, and engine manufacturer technical representatives. The fire pump manufacturer shall also be present for the preliminary test of the fire pump system.

D40 1.2.2.5 Kitchen Hood Fire Extinguishing Systems

The kitchen hood fire extinguishing system shall contain water for the actual performance testing. The nozzles may be bagged in order to minimize damage from water spray.

D40 1.2.2.6 Spray-Applied Fire Proofing and Fire Stopping

See Section C1030 for requirements.

D40 1.2.3 Training

The contractor shall provide training for the active systems within 6 weeks of final acceptance of the systems. The training shall be scheduled at least 2 weeks in advance.

D40 1.3 DESIGN SUBMITTALS

Design Submittals shall be in accordance with Z10, *General Performance Technical Specifications*, UFGS section 01 33 10.05 20, *Design Submittal Procedures*, UFC 1-300-09N, *Design Procedures* and UFC 3-600-10N, *Fire Protection Engineering*.

D40 1.4 CONSTRUCTION SUBMITTALS

Submit construction submittals in accordance with PTS Section Z10, *General Performance Technical Specifications*. In addition to the Z10 requirements, the Designer of Record (DOR) shall approve the following construction submittals as a minimum:

All fire protection engineering submittals including:

a. Shop Drawings. Provide shop drawings for all systems.
b. Product Data. Provide product data for all equipment.
c. Design Data. Provide design data for all system calculations.
d. Test Reports.
e. Certificates.

D4010 FIRE ALARM AND DETECTION SYSTEMS

D401001 FIRE ALARM DISTRIBUTION

D401001 1.1 REMOTE ANNUNCIATORS

Remote annunciators shall have a minimum 80 character alphanumeric display with alarm acknowledge, alarm silence, and reset functions.

D401001 1.2 TRANSMITTED SIGNALS

Provide the following signals to be sent to the fire alarm receiving station:

a. Sprinkler Water Flow
b. Smoke Detector
c. Manual Pull Station
d. Supervisory (i.e., valve tamper switch, fire pump loss of power, fire pump phase reversal)
e. Duct Smoke Detector
f. Fire Pump Running
g. Sleeping Room Smoke Detector

D4020 FIRE SUPPRESSION WATER SUPPLY AND EQUIPMENT

D402001 FIRE PROTECTION WATER PIPING AND EQUIPMENT

The design point of connection to the existing water supply shall require the approval of the Contracting Officer. The FP DOR shall conduct additional flow tests after contract award prior to any design submissions. Tests shall be conducted under the supervision of the Contracting Officer.

D4040 SPRINKLERS

D404001 SPRINKLERS & RELEASING DEVICES

D404001 1.1 DESCRIPTION

Areas subject to freezing shall be provided with a dry pipe system. Loading docks may be protected with dry-type sidewall sprinklers supplied by the wet-pipe system.

D404001 1.2 REQUIREMENTS

Utilize upright sprinklers with ordinary temperature rating and color to match finish in normally occupied rooms without a finished ceiling (i.e., laboratories, and other spaces with exposed ceilings).

D4090 OTHER FIRE PROTECTION SYSTEMS

-- End Of Section --

THIS PAGE HAS BEEN INTENTIONALLY LEFT BLANK

SECTION D50

ELECTRICAL
8/08

D50 GENERAL

D50 1.1 NARRATIVE

This section covers installations inside the facility and out to the five foot line. See PTS Section G40, *Site Electrical*, for continuation of systems beyond the five foot line.

D50 1.2 ELECTRICAL DESIGN GUIDANCE

Provide the design and installation in accordance with the following references. This Performance Technical Specification (PTS) adds clarification to the fundamental requirements contained in the following Government Standards. The general requirements of this PTS section are located in PTS Section Z10, *General Performance Technical Specification*.

When all product Quality Control information is included in the Unified Facility Criteria (UFC) and there are requirement options identified in the ESR, then the UniFormat Level 4 titles (and possible subtitles) are included without additional verbiage. One example of this is D501090, OTHER SERVICE AND DISTRIBUTION.

D50 1.2.1 Government Publications

UNITED FACILITIES CRITERIA (UFC)

UFC 3-501-01, *Electrical Engineering*

UFC 4-721-10: *Navy and Marine Corps Bachelor Housing*

UNITED FACILITIES GUIDE SPECIFICATIONS (UFGS)

UFGS 26 23 00: *Switchboards and Switchgear*

UFGS 26 29 23, *Variable Frequency Drive Systems under 600 Volts*

UFGS 28 20 00.00 20, *Electronic Security System (ESS), Commercial*

UFGS 27 10 00, *Building Telecommunications Cabling System*

UFGS 26 41 00.00 20, *Lightning Protection System*

UFGS 27 54 00.00 20, *Community Antenna Television (CATV) Systems*

UFGS 27 21 00.00 20, *Intercommunication System*

UFGS 26 51 00, *Interior Lighting*

UFGS 26 20 00, *Interior Distribution System*

D50 1.3 QUALITY ASSURANCE

Qualifications, certifications, and Test Plans indicated herein shall be submitted 45 calendar days prior to the expected date of execution. Notify the Contracting Officer 14 calendar days prior to all testing. Submit test results within 7 calendar days of completion of testing.

The Designer of Record is responsible for approving the submittals listed below.

D50 1.3.1 Qualified Testing Organization

Contractor shall engage the services of a qualified testing organization to provide inspection, testing, calibration, and adjustment of the electrical distribution system and equipment listed in paragraph entitled "Acceptance Tests and Inspections" herein. Organization shall be independent of the supplier, manufacturer, and installer of the equipment. The organization shall be a first tier subcontractor.

Submit name and qualifications of organization. Organization shall have been regularly engaged in the testing of electrical materials, devices, installations, and systems for a minimum of 5 years. The organization shall have a calibration program, and test instruments used shall be calibrated in accordance with NETA ATS.

Submit name and qualifications of the lead engineering technician performing the required testing services. Include a list of three comparable jobs performed by the technician with specific names and telephone numbers for reference. Testing, inspection, calibration, and adjustments shall be performed by an engineering technician, certified by NETA or the National Institute for Certification in Engineering Technologies (NICET) with a minimum of 5 years' experience inspecting, testing, and calibrating electrical distribution and generation equipment, systems, and devices.

D50 1.3.2 NEC Qualified Worker

Provide in accordance with NFPA 70. Qualified Workers shall be allowed to be assisted by helpers on a 1 to 1 ratio, provided such helpers are registered in recognized apprenticeship programs. Submit a certification confirming NEC Qualified Worker requirements.

D50 1.3.3 Qualified Telecommunications Worker

All installers assigned to the installation of telecommunications systems or any of its components shall be Building Industry Consulting Services International (BICSI) Registered Cabling Installation Technicians or have a minimum of 3 years experience in the installation of the specified copper and fiber optic cable and components. Include names and locations of two projects successfully completed using optical fiber and copper communications cabling systems. Include written certification from users that systems have performed satisfactorily for not less than 18 months. Include specific experience in installing and testing structured telecommunications distribution systems using optical fiber and Category 5e cabling systems.

D50 1.3.4 Material Standards

Ensure service support and provide manufacturer's nameplate in accordance with PTS Section Z10, *General Performance Technical Specification*.

D50 1.3.4.1 Warning Labels

Provide arc flash warning labels.

D50 1.3.4.2 Field-Required Nameplates

Provide laminated plastic nameplates for each switchboard, switchgear, panelboard, equipment enclosure, motor controller, relay, and switch. Each nameplate must identify the function and, when applicable, the position. Provide melamine plastic nameplates, 0.125 inch (3 mm) thick, white with black center core. Surface shall be matte finish. Corners shall be square. Accurately align lettering and engrave into the core. Minimum size of nameplates shall be 1-inch by 2-1/2 inches (25 mm by 65 mm). Lettering shall be a minimum of 0.25 inch (6.35 mm) high normal block style.

D50 1.3.5 Factory Testing

The Government reserves the right to witness all factory testing. The manufacturer shall have a calibration program that assures that all applicable test instruments are maintained within rated accuracy.

D50 1.3.6 Electrical System Startup and Testing

Submit test plans for approval. The test plans shall be tailored to the systems provided.

The test plan shall list make and model and provide functional description of the test instruments and accessories and shall describe the setup of the tests to be conducted. Test instruments shall be capable of measuring and recording or displaying test data at a higher resolution and greater accuracy than specified for the equipment's performance.

D50 1.3.6.1 Factory Trained Engineer

Provide a factory trained engineer to supervise start-up and testing as required in referenced specifications.

D50 1.3.6.2 Performance Verification Testing

The Contractor shall show by demonstration in service that all circuits and devices are in operating condition. Tests shall be such that each item of control equipment will function not less than five times. The Contractor shall provide all necessary test equipment, tools, fuel, load banks, labor, and materials for testing. As a minimum, all systems shall be tested in accordance with manufacturer's recommendations. Additional testing requirements for the various systems are described with those systems, hereinafter. The Contractor shall assure that all applicable test instruments are maintained within rated accuracy. Dated calibration labels shall be visible on all test equipment.

Submit a separate electrical field test plan in accordance with manufacturer's recommendations and that conforms to NETA ATS for each piece of Electrical Distribution Equipment and System requiring Performance Verification Testing.

The following items identify specific test requirements. Additional test requirements are contained in the applicable UFGS.

a. Panelboards - Field test each GFI and AFI circuit breaker with a UL 1436-certified outlet circuit tester to verify correct operation.
b. Motor control centers – Test motor control centers and motor starters in accordance with NETA ATS.
c. Transient voltage surge suppressors (TVSS) –

1) Inspect for physical damage and compare nameplate data with the drawings and specifications, if applicable. Verify from the nameplate data that the TVSS equipment is appropriate for the system voltage.

2) Verify lead length between the TVSS equipment and the circuit connection is less than one foot.

3) Verify wiring between the TVSS equipment and the circuit connection does not include high-inductance coils or sharp bends.

4) Confirm circuit breaker used for TVSS circuit connection is sized in accordance with TVSS manufacturer's requirements.

5) Ensure TVSS equipment is grounded in accordance with TVSS manufacturer's requirements. Check the ground lead on each device for individual attachment to the ground bus or electrode.

6) Check tightness of connections in accordance with NETA ATS.

7) For TVSS equipment with visual indications of proper operation, verify that it displays normal operating characteristics.

d. Busway – Conduct standard tests for busway in accordance with NETA ATS.
e. Receptacles – Test GFI receptacles with a UL 1436-certified outlet circuit tester to verify correct operation.
f. Lighting - Aim photocell switches and locate light level sensors in accordance with the manufacturer's recommendations. Verify that equipment operates in accordance with user's requirements and in accordance with manufacturer’s recommendations. Fluorescent lamps on electronic dimming ballast control shall be burned in at full light output for 100 hours before dimming.
g. Telecommunication - Test telecommunications systems in accordance with applicable EIA/TIA requirements.

h. Public address and intercommunications systems - Tests shall include originating and accepting messages at each station, at proper volume levels, without cross-talk or noise from other links or non-designated units. Test shall utilize the phonetically balanced monosyllabic work intelligibility test in accordance with ANSI S3.2 (ASA 85). In order to be acceptable, a score of at least 75 percent must be obtained for each system test.

i. Community Antenna Television Systems - Confirm design and installation is in compliance with NCTA-02, 47 CFR 76.605 and in accordance with FCC proof of performance requirements. Test plan shall define tests required to ensure that the system meets technical, operational, and performance specifications. Test plan shall include plan for testing for signal leakage.

j. Electronic security systems (ESS) – Test ESS in accordance with UFGS requirements.

k. Grounding systems - Test the grounding system in accordance with NETA ATS.

l. Lightning protection - Upon completion of the installation, Contractor shall furnish the UL Lightning Protection Inspection Certificate certified to UL 96A for the system.

m. Emergency lighting - Test emergency lighting that is intended for means of egress in accordance with NFPA 101, Section 5-9. Confirm the emergency lighting system operates for a minimum of 90 minutes and emergency illumination satisfies NFPA 101, Section 5-9, specified levels.

D50 1.3.6.3 Acceptance Tests and Inspections

The Government reserves the right to witness all Acceptance Tests and Inspections, review data, and request other such additional inspections and repeat tests as necessary to ensure that the system and provided services conform to the stated requirements.

The Qualified Testing Organization shall provide the Acceptance Tests and Inspections test plan and perform the acceptance tests and inspections. Test methods, procedures, and test values shall be performed and evaluated in accordance with NETA ATS, the manufacturer's recommendations, and paragraph entitled "Field Quality Control" of each applicable specification section. Tests identified as optional in NETA ATS are not required unless otherwise specified. Equipment shall be placed in service only after completion of required tests and evaluations of the test results have been completed. Contractor shall supply to the testing organization complete sets of shop drawings, settings of adjustable devices, and other information necessary for an accurate test and inspection of the system prior to the performance of any final testing. Perform acceptance tests and inspections on Diesel-Electric Generators, Uninterruptible Power Supply (UPS) Systems, 400-Hertz Motor Generator Sets, 400-Hertz Solid State Frequency Converters, Automatic Transfer Switches, and Switchboards and Switchgear.

D50 1.4 DESIGN SUBMITTALS

Design Submittals shall be in accordance with PTS Section Z10, *General Performance Technical Specifications*, UFGS Section 01 33 10.05 20, *Design Submittal Procedures*, UFC 1-300-09N, *Design Procedures*, and UFC 3-500-10N, *Electrical Engineering*.

In addition, UFGS sections listed below or in the body of the PTS text are to be used by the Designer of Record (DOR) as a part of the design submittal. If the UFGS products or systems are applicable to the project, the DOR shall edit these referenced UFGS sections and submit them as a part of the design submittal specification. Edit the specification sections in accordance with the limitations stated in PTS Section Z10, *General Performance Technical Specifications*.

UFGS 26 23 00: *Switchboards and Switchgear*

UFGS 26 29 23, *Variable Frequency Drives System under 600 Volts*

UFGS 26 32 13.00 20, *Single Operation Generator Sets*

UFGS 26 32 26, *Motor Generator Sets, 400 Hertz*

UFGS 26 33 53.00 20, *Uninterruptible Power Supply (UPS)*

UFGS 26 35 43, 400 *Hertz Frequency Converters*

UFGS 26 36 23.00 20, *Automatic Transfer Switches*

UFGS 28 20 00.00 20, *Electronic Security System (ESS), Commercial*

D50 1.5 CONSTRUCTION SUBMITTALS

Submit construction submittals in accordance with PTS Section Z10, *General Performance Technical Specifications*. In addition to the PTS Section Z10 requirements, the Designer of Record (DOR) shall approve the following construction submittals as a minimum:

Electrical Equipment, OMSI information for equipment, and Quality Assurance Submittals listed above.

Provide certification that all adjustable protective device settings have been set in accordance with the coordination study for the as-built equipment and configuration.

D5010 ELECTRICAL SERVICE AND DISTRIBUTION

D501001 MAIN TRANSFORMERS

Pad mounted distribution transformers shall be in accordance with PTS Section G40, *Site Electrical Utilities*.

D501002 SERVICE ENTRANCE EQUIPMENT

When a switchboard or switchgear is required, the Designer of Record shall utilize UFGS Section 26 23 00 for the project specification, and shall submit the edited specification section as a part of the design submittal for the project.

D501003 INTERIOR DISTRIBUTION TRANSFORMERS

D501004 PANELBOARDS

Panelboards shall comply with UL 67 and UL 50. UL 869A shall apply if used as service entrance equipment. Panelboards for non-linear loads shall be UL listed, including heat rise tested, in accordance with UL 67, except with the neutral assembly installed and carrying 200 percent of the phase bus current during testing.

Provide molded case circuit breakers in accordance with UL 489. Ground fault circuit interrupting circuit breakers shall comply with UL 943. Arc fault circuit breakers shall comply with UL 489 and UL 1699.

D501005 ENCLOSED CIRCUIT BREAKERS

Provide molded case circuit breakers in accordance with UL 489. UL 869A shall apply if used as service entrance equipment. Provide with solid neutral when grounded conductor is present.

D501006 MOTOR CONTROL CENTERS

Motor control centers shall comply with UL 845, NEMA ICS 2, and NEMA ICS 3. Motor controllers shall comply with UL 508. Provide disconnecting means capable of being locked out for machines and other equipment to prevent unexpected startup or release of stored energy in accordance with 29 CFR 1910.147.

D501006 1.1 VARIABLE FREQUENCY DRIVES (VFD)

When Variable Frequency Drives are required, the Designer of Record shall utilize UFGS Section 26 29 23 for the project specification, and shall submit the edited specification section as a part of the design submittal for the project.

D501090 OTHER SERVICE AND DISTRIBUTION

D501090 1.1 TRANSIENT VOLTAGE SURGE SUPPRESSORS (TVSS)

D501090 1.2 BUSWAY

Busway shall comply with NEMA BU 1 and UL 857.

D5020 LIGHTING AND BRANCH WIRING

D502001 BRANCH WIRING

Provide wiring and connections for special outlets where required.

All homerun circuits must contain no more than 3 phase conductors.

Switches shall comply with NEMA WD-1 and UL 20.

D502002 LIGHTING EQUIPMENT

Installation shall meet requirements of manufacturer's recommendations and the additional requirements for "Severe Seismic Disturbance" contained in ASTM E 580. Fixture support wires shall conform to ASTM A-641, galvanized regular coating, soft temper.

D502002 1.1 BALLASTS

Electronic ballasts shall include a 5-year warranty.

D5030 COMMUNICATIONS AND SECURITY

D503001 TELECOMMUNICATIONS SYSTEMS

D503002 PUBLIC ADDRESS SYSTEMS

D503003 INTERCOMMUNICATIONS SYSTEMS

D503004 TELEVISION SYSTEMS

D503004 1.1 CLOSED CIRCUIT TELEVISION (CCTV) FOR VIDEO TRAINING

D503004 1.2 COMMUNITY ANTENNA SYSTEM (CATV)

D503005 SECURITY SYSTEMS

D503005 1.1 ELECTRONIC SECURITY SYSTEMS (ESS)

When an ESS system is required, the Designer of Record shall utilize UFGS Section 28 20 00.00 20 for the project specification and shall submit the edited specification section as a part of the design submittal for the project.

D503005 1.2 PROTECTED DISTRIBUTION SYSTEMS (PDS)

Protected Distribution Systems shall be in accordance with UFC 3-580-10 and IA PUB-5239-22, Information Assurance Protected Distribution System (PDS) Guide Book.

D503005 1.3 SENSITIVE COMPARTMENTED INFORMATION FACILITIES (SCIF)

Electrical systems installed within SCIF spaces or facilities shall be in accordance with the Director of Central Intelligence Directive (DCID) 6/9.

D503090 OTHER COMMUNICATIONS AND ALARM SYSTEMS

D5090 OTHER ELECTRICAL SERVICES

D509001 GENERAL CONSTRUCTION ITEMS (ELECTRICAL)

D509002 EMERGENCY LIGHTING AND POWER

D509002 1.1 EMERGENCY LIGHTING

D509002 1.2 EMERGENCY GENERATORS

When an emergency generator is required, the Designer of Record shall utilize UFGS Section 26 32 13.00 20 for the project specification, and shall submit the edited specification section as a part of the design submittal for the project.

D509002 1.3 AUTOMATIC TRANSFER AND BYPASS/ISOLATION SWITCHES

When an Automatic Transfer Switch is required, the Designer of Record shall utilize UFGS Section 26 36 23.00 20 for the project specification, and shall submit the edited specification section as a part of the design submittal for the project.

D509002 1.4 UNINTERRUPTIBLE POWER SUPPLY (UPS) SYSTEM

When a UPS system is required, the Designer of Record shall utilize UFGS Section 26 33 53.00 20 and shall submit the edited specification section as a part of the design submittal for the project.

D509003 GROUNDING SYSTEMS

D509004 LIGHTNING PROTECTION

D509005 ELECTRIC HEATING

D509006 ENERGY MANAGEMENT CONTROL SYSTEM

D509090 OTHER SPECIAL SYSTEMS AND DEVICES

D509090 1.1 400 HERTZ SYSTEMS

The Designer of Record shall utilize UFGS Section 26 32 26 or UFGS Section 26 35 43 for the project specification, and shall submit the edited specification section as a part of the design submittal for the project.

--End of Section--

THIS PAGE HAS BEEN INTENTIONALLY LEFT BLANK

SECTION E20

FURNISHINGS
03/10

E20 GENERAL

E20 1.1 DESIGN GUIDANCE

Provide the design and installation in accordance with the following references. This Performance Technical Specification (PTS) adds clarification to the fundamental requirements contained in the following Government Standards. The general requirements of this PTS section are located in PTS Section Z10, *General Performance Technical Specification*.

Industry standards, codes, and Government standards referenced in the section text that are not found in the Unified Master Reference List (UMRL) in the Construction Criteria Base (CCB) at the Whole Building Design Guide Website , are listed below for basic designation identification. Comply with the required and advisory portions of the current edition of the standard at the time of contract award:

E20 1.1.1 Industry Standards and Codes

E20 1.1.2 Government Standards

UNIFIED FACILITIES CRITERIA (UFC)

UFC 03-100-10, *Architecture*

UFC 03-120-10, *Interior Design*

UFC 1-300-09N, *Design Procedures*

E20 1.2 GENERAL REQUIREMENTS

The Contractor shall have an Interior Designer, certified by the National Council for Interior Design Qualification (NCIDQ), or a state and/or jurisdiction Certified, Registered, or Licensed Interior Designer prepare both the FF&E and the SID Package and participate in any design charettes to develop the building floor plan. As required, the Contractor shall obtain services of equipment specialists to specify the audiovisual, shop, or specialty equipment. The Interior Designer and any specialists shall not be affiliated with any furniture dealership/vendor or manufacturer. The Government Interior Designer reserves the right to approve/disapprove the qualifications of the Contractor’s Interior Designer.

Systems furnishings installers must be the systems furniture manufacturer's approved dealer of record. In addition, installation dealers must be located within a 100 mile radius of the project site unless approved by the government Interior Designer.

[Contractor to re-purpose/ recycle existing furniture if not relocated by the government. Contractor to provide verification that the existing furniture was not disposed of at the landfill.]

E20 1.3 DESIGN SUBMITTALS

Design Submittals shall be in accordance with Z10, *General Performance Technical Specifications*, UFGS section 01 33 10.05 20, *Design Submittal Procedures*, UFC 1-300-09N, *Design Procedures*, and UFC 03-120-10, *Interior Design*.

E20 1.4 CONSTRUCTION SUBMITTALS

Submit construction submittals in accordance with PTS Section Z10, *General Performance Technical Specifications*. In addition to the Z10 requirements, the Designer of Record (DOR) shall approve the following construction submittals as a minimum:

Art work and FF&E Package

E2010 FIXED FURNISHINGS

E201001 FIXED ARTWORK

E201002 WINDOW TREATMENTS

Provide interior window coverings, associated hardware and controls at each exterior window and at any interior view window where privacy may be required. Refer to the Project Program for size, pattern and style of window treatments. At a minimum, functional window coverings such as blinds or solar shades are required on all projects.

E201002 1.1 BLINDS

Venetian blinds shall be one-inch horizontal room-darkening commercial grade aluminum at a minimum thickness of 0.008-inch (0.2 mm) (after coating) with a minimum of 15 slats per foot (45.72 slats per meter). Blinds shall be provided at each exterior window and at any interior window where privacy may be required. One full size sample shall be provided and installed for review and approval.

E201002 1.2 SHADES

Provide energy efficient solar shading systems for exterior windows. The system shall maintain visibility while reducing glare, solar heat gain during the summer and heat loss during the winter. Openness configuration shall be no more than 5% for most areas. The system fabrics and components shall be dimensionally stable and shall be manufactured to withstand fading, fire, mildew, and soiling.

E201002 1.3 DRAPERIES AND HARDWARE

Draperies shall be manufactured under GSA contract as part of FF&E. Drapery can be accordion-fold, ripple-fold, or pinch-pleat with associated hardware suitable for the project requirements. All draperies shall meet the NFPA Code 701 California Fire Marshall’s flame retardant requirements.

E201003 SEATING (FIXED)

E201003 1.1 AUDITORIUM, LECTURE AND CLASSROOM SEATING

The system shall permit the standards to be installed on radial lines from a common center for which concentric circles are determined with each row of units utilizing common middle standards. Standards in each row shall be placed laterally so the aisle-end standards will be in alignment as indicated on seating layout drawing. The angle of

inclination of backs shall be adjusted for variations in sightlines. Mechanical attachment of components shall be of sufficient flexibility so that when permanently assembled they will compensate for the changing dimensions laterally between standards caused by convergence toward the center. Seat and back attachments shall absorb inaccuracies in lateral spacing of standards at point of attachment caused by unevenness of floor. Varying lateral dimensions of backs and seats shall be in accordance with approved seating layout. Minimum width of seating unit shall be 20 inches and may be used only to complete a specific row dimension.

E201003 1.2 FIXED TABLES FOR AUDITORIUM, LECTURE AND CLASSROOMS

Provide worksurfaces mounted to floor standards shall be tubular steel, sheet steel, or cast iron. The standards shall be formed to fit the floor incline so that the standards will be vertical. The feet shall be formed to eliminate tripping hazards and shall have holes for bolt attachment to the floor. Provide riser standards, cantilevered standards and aisle and end standards as required. Provide communications, data and power routing as required. Provide a high-pressure plastic laminate over medium density particleboard for the worksurfaces with coordinating vinyl or resin edge detail.

E2020 MOVABLE FURNISHINGS

Furnishings, Fixtures, and Equipment (FF&E) shall include furniture, shop equipment, audiovisual equipment, and specialty equipment. Weapon racks, drying cages, and lockers are not considered FF&E. FF&E shall be fully integrated with the building systems and finishes. FF&E may also include specialty items for which the customer activity shall be responsible for specifying.

Design and provide as required FF&E for all areas as developed during client programming. Design an FF&E package and prepare supporting plans and procurement data in accordance with the general interior design requirements in UFC 3-120-10.

E2020 1.1 FF&E PACKAGE

FF&E Package: Design and provide a fully usable and complete facility to include a FF&E movable furnishings package from Government supply sources according to Federal Acquisition Regulations. The FF&E will include, but not limited to, systems and modular furniture, training and conference furniture, seating, tables, artwork, decorative window covering, specialty furniture and equipment, dormitory room furnishings, and accessories. NAVSUP Blanket Purchase Agreements (BPA) must be used whenever possible. The government will provide separate funding for the FF&E package. Construction funds will not be used. The FF&E Package must include shipping, freight, handling, installation and the HAR percentage as applied to the final FF&E total cost.

E2020 1.1.1 Authorization

The government will provide separate funding for procurement of the FF&E package. Upon receipt of required funding, the Contractor shall be authorized by the Contracting Officer <u>as a planned line item modification</u> to the contract/task order to procure all FF&E using predominately negotiated Federal contracts. The amount of the modification will be the actual cost of these items from the Federal price schedules or NAVSUP BPAs, including any freight and installation charges from the furniture supplier as well as the contractor's FF&E Handling and Administration Rate (HAR). The HAR includes all of the prime

contractor's effort related to storage, coordination, handling, administration of subcontractors, and all other associated costs and profit for the procurement of FF&E. The prime contractor will propose in the contract/task order solicitation the FF&E HAR. The contractor's proposed HAR may not exceed 5% of the total FF&E costs, as noted on the bid schedule. No other charges, expenses, fees, markups, etc will be authorized.
The government Interior Designer will approve the final FF&E submittal. The FF&E package will be presented to the Contracting Officer and the Contractor shall provide the FF&E exactly as specified and approved.
The Contractor will receive a letter of authorization from the Contracting Officer citing the name of the furniture dealer and other information to use when accessing the government supply sources. FF&E items are subject to the Buy American Act.

E2020 1.2 PURCHASE AND INSTALLATION

The Contractor shall coordinate the building completion date with the installation dealer specified in the FF&E Package. The Contractor or contractor's representative is responsible for the following: issuing purchase orders, receiving acknowledgements, sending copies of purchase orders to the installation dealer(s) specified in the FF&E package, and providing necessary deposits to furniture manufacturers.

The FF&E installation dealer(s) is responsible for the following: Receiving and installing all FF&E specified in the FF&E package, coordinating delivery and installation with the Contractor, inspecting for damage, providing delivery receipts to the Contractor, filing necessary freight claims, hanging artwork, bulletin boards, etc., removing packaging material, cleaning up the site upon completion, and adhering to Contractor's safety requirements.

E2020 1.2.1 Use of GSA Schedules and Blanket Purchase Agreements (BPAs)

The prime contractor or FF&E dealer will be authorized to purchase supplies or services from the Navy Furniture BPAs for FF&E requirements. under the terms of the contract. The Contractor will receive a letter of authorization from the contracting officer citing the name of the furniture dealer and other information to use when accessing the government supply sources or BPAs.

E2020 1.2.2 Deposits

The Contractor should anticipate providing a deposit of between 30% to 50% of the furniture costs when placing their order.

The Contractor shall also anticipate possible manufacturer price increases. Recommend ordering FF&E product once funds are received to avoid incurring additional costs. Delayed production and delivery dates can be noted at the time of order placement to coincide with building completion dates. Any costs incurred due to manufacturer price increases will be the burden of the contractor.

E2020 1.2.3 Davis Bacon Wages

Davis Bacon wages do not apply to the FF&E installer from the government supply sources. The workforce for the FF&E installation and delivery shall be separate and distinct from the labor workforce performing under the construction contract.

E2020 1.2.4 Sales Tax

Exemptions for certain State or Local taxes may be available to the contractor and/or its subcontractors. The contractor shall take maximum advantage of all exemptions, including obtaining a resale permit, from State and Local taxation authorities whether available to it directly or available to the contractor based on an exemption afforded the government. The responsibility for paying applicable taxes rests with the contractor. State and local taxes applicable to the FF&E line will be included with the subcontractor's quote, if applicable. Any items purchased as building materials such as carpet are taxable.

E2020 1.2.5 Bonds

FF&E line item is not considered construction and the prime contractor shall not be required to secure any additional bond for the award of the FF&E line item unless otherwise indicated in the RFP. If any additional bond is required for the FF&E line item it is to be included in the prime contctor's FF&E HAR.

E2020 1.2.6 Unique Item Identification (IUID) and Validation

Unique item identification and valuation is a system of marking and valuing items delivered to DoD that enhances logistics, contracting, and financial business transactions. The IUID policy is mandatory for all DoD contracts that require the delivery of items. An item is a single article or a single unit formed by a grouping of subassemblies, components or constituent parts. The contractor shall provide DoD Unique item identification, valuation and delivery of data for all required FF&E items for which the government's unit acquisition cost is $5,000 or more.

E2020 1.2.7 Buy American Act

All supplies under the FF&E line item are subject to the Buy American Act. The GSA contracts and NAVSUP Blanket Purchase Agreements are required to comply with the Buy American Act.

E2020 1.2.8 Small Business Requirements

The FF&E is subject to the Contractor's Small Business Goals however the government requires the furniture be purchased from NAVSUP Blanket Purchase Agreements (BPA). Most manufacturers on the Office Furniture BPA are large business and most manufacturers on the Dorm and Quarters BPA are small business. Installation dealers are small business. Under the terms of the BPA, the FF&E must be ordered directly through the GSA manufacturer. Using pass-through companies to achieve Small Business Goals will not provide the Contractor credit unless they manufacturer 20% or provide 50% of the service purchased. The government will not incur additional costs to use small business.

E2020 1.2.9 Installation

The FF&E package includes the installation of all furniture and furnishings as specified in the FF&E package. The installation dealer specified in the FF&E package will receive, store, if required, transport to the project site, off load, inside deliver, unpack, assemble, place/install, clean, if required, and dispose of all the trash for all furniture and furnishings. The Contractor's Interior Designer will be responsible for specifying

installation services and warehousing, as required, for all collateral equipment. It is the Contractor's responsibility to coordinate the building completion, occupancy, and furniture installation dates with the installation dealer specified in the FF&E package. Any costs associated with storing or delaying furniture shipments is the responsibility of the construction contractor.

E2020 1.2.10 Installation Warranty

All movable furnishings shall be installed in accordance with the manufacturer’s instructions and warranty requirements. All movable furnishings shall be level and aligned and all doors, drawers and accessories shall be level and aligned to open, close and otherwise operate smoothly and securely. All systems furniture shall be installed by the systems furniture manufacturer’s dealer of record and not the general Contractor. The Contractor shall repair, to the customer’s satisfaction, any/all damage to any facility finish that is a result of the furniture installation and correct all punch list items for the furniture/furnishings.

E2020 1.2.11 Ordering Documentation

Two copies of all ordering documentation shall be provided to the contracting officer including Factory Order number (FO) and warranty information.

E2020 1.2.12 Post Award Changes

After award of the FF&E line item modification, any request to change the FF&E items must be submitted on the Contracting Officer. The FF&E modification has been accepted, priced, and negotiated based on specific line items as detailed in the final package. Those items have been agreed to considering color, specific type and quality of material, price, sustainability, life cycle, and dealership service. The Government will expect and require the contractor to provide exactly those items. Should changes become necessary, careful consideration is required to ensure that equivalent quality, price and other aspects of the item is maintained. Otherwise, price adjustments must be negotiated. The Contracting Officer will obtain approval from the Government Interior Designer/Collateral Equipment Manager in consultation with the client for any changes to the FF&E.

Post award FF&E manufacturer's price increases are the responsibility of the Contractor and shall not be transferred to the government. Recommend ordering FF&E product once funds are received to avoid incurring additional costs. Delayed production and delivery dates can be noted at the time of order placement to coincide with building completion dates.

E2020 1.3 BEST VALUE DETERMINATION

A best value determination is required by FAR 8.404 when placing orders against Federal Supply Schedules for the selection of furniture and furnishings. A BVD must also be provided for FF&E installation services. Best Value is defined in FAR 2.101 as ensuring that the order to be placed under a Federal Supply Schedule results in the lowest overall cost alternative (considering price, special features, administrative costs and client’s needs) to meet the government's needs.

The Contractor's Interior Designer is responsible for the following

written BVD justifications:

$3,000 or less: For any procurement in the FF&E package with a value of $3,000 or less, the interior designer may utilize any BPA holder. If the BPA holders cannot supply the item, then any other manufacturer may be utilized.

Greater than $3,000 and $100,000 or less: for any procurement in the FF&E package with a value greater than $3,000 and $100,000 or less, the contractor's interior designer shall always review pricing from at least three manufacturers as well as UNICOR. In addition to the review of published list prices, the contractor's interior designer must confirm the pricing with the vendor. Manufacturer's quotes are NOT required. The BVD form must be completed and submitted for all FF&E procurements greater than $3,000 and $100,000 or less.

Greater than $100,000: The contractor's interior designer shall solicit proposals from all BPA holders under the applicable group for FF&E procurements greater than $100,000. UNICOR must always be solicited. The contractor's interior designer shall develop performance criteria and project requirements based on a generic design for the BPA holders and UNICOR to develop a price and performance proposal. The BVD form must be completed and submitted for all FF&E procurements greater than $100,000 and manufacturer's quotes and a summary of all proposals must be attached.

Federal Prison Industries (UNICOR) must be considered as part of all BVDs. This must be done by sending an email with the requirements and evaluation criteria If they are not comparable in one or more areas of price, quality, and time of delivery, the designer can specify product under NAVSUP BPA or GSA schedule.

The best value determination shall address issues such as space planning; human factors data related to anthropometrics (reach, clearance, adjustability), space, and acoustics; ergonomics; product quality (including construction and materials); sustainability features, product warranties; history of the product and/or manufacturer; ability to service products through dealers or others within a certain geographical range of the project; price (including freight); aesthetics; appropriateness; and lighting, power and telecommunications systems management and/or coordination as related to the facility (when applicable); and other project specific factors as identified and/or required. Emphasis shall be to create a fully integrated design solution by providing quality products to meet the functional needs of the customer. Customer preferences shall be considered. The focus shall be on the best overall value. Use the GSA Best Value Determination forms provided in Part 6 of this RFP as guidelines for information to be provided.

E202001 MOVABLE ART WORK

The Contractor shall provide artwork for wall installation as part of the FF&E Submittal according to the project program. Installation of artwork to be completed by installation dealer specified in the approved FF&E package. Type of artwork to be determined by client requirements and budget as described in the Project Program for the project. Install framed artwork 1600mm (63 inches) on center above finished floor. Include security mounting hardware as required.

E202002 MODULAR PREFABRICATED FURNITURE

E202002 1.1 FURNITURE SYSTEMS

Provide products that meet the NAVFAC performance specifications for systems furniture. The Government Interior Designer must approve any other systems furniture manufacturer. The typical workstation shall maximize each allocated space with worksurfaces and overhead closed storage with a surface to accommodate a Government provided computer. An attached articulated keyboard/mouse tray shall be selected or provided. Provide a monitor lift if required by the project program.

Powered raceways that will accommodate data and voice wire management shall be completely coordinated with all facility systems. The Contractor's Interior Designer shall ensure the coordination of all electrical/data and furniture locations. Use of power poles will not be permitted to power FF&E. The Contractor shall provide and coordinate all telecommunication receptacles and outlet requirements (i.e. RJ 11/45 receptacles and cover plates) with the Contractor's Interior Designer and the systems furniture installer. The Contractor shall hardwire all pre-wired furniture with the building systems, and coordinate all IT and telephone connections.

E202002 1.2 MODULAR FREESTANDING FURNITURE AND WORKSTATIONS

Provide products that meet the NAVFAC performance specifications for modular freestanding furniture including wood. Provide modular furniture with electrical/data cable trays and grommet holes for private offices and smaller work areas. An attached articulated keyboard/mouse tray (and monitor lift if required by the project program) shall be selected. Wood surfaces shall be provided as appropriate. Include accommodation for a Government provided computer and printer.

E202003 FREESTANDING FURNITURE

E202003 1.1 SEATING

E202003 1.1.1 Task Seating

Provide task seating that is fully ergonomic and coordinated by finish and scale to the workstation. Seating specifications to include: adjustable arms, back, height, and seat pan; 5 star base, appropriate castors for floor surface, lumbar support and availability in a minimum of two (2) sizes. Task seating can be from the same manufacturer as the systems or major furniture supplier or other seating manufacturer as approved by the government Interior Designer, provided it is determined to be a BPA "Best Value".

E202003 1.1.2 Lounge, Reception and Guest Seating

Provide lounge, reception and guest seating with upholsteries consistent with the Project Program. Seating shall be easily reupholstered or have removable covers.

E202003 1.1.3 Training Room Seating

Provide seating with passive ergonomic features in that the seat and back offers some synchronized movement to allow the person seated to change positions. The support can be legs, sled base or single pedestal with 5 star base and casters as determined by user requirements. Provide high density stack chairs or nesting chairs as required. Provide attached, storable tablet arm as required.

E202003 1.2 STORAGE AND FILING

Provide freestanding storage units, file cabinets and file safes to accommodate the specific and unique storage requirements of the user. Coordinate closely with storage provided in PTS Section E10, Equipment, for high density filing.

E202003 1.3 CHILD DEVELOPMENT CENTERS

Provide all child care and classroom furnishings such as cribs, rocking chairs, feeding chairs, tables, seating, toy storage, book display storage, activity centers, freestanding floor activity toys, and any other required furnishings. Outdoor structural play equipment may be required. The cribs shall be of stainless steel construction. The chairs and tables shall be appropriately sized for each age group.

E202003 1.4 TRAINING/CONFERENCE ROOM FURNISHINGS

E202003 1.4.1 Tables

Provide single or multi-person worksurfaces or tables as determined from user requirements. Where computers are used, provide tables with wire management capability or pre-wired tables to accommodate data/telecommunications requirements. Powered raceways that will accommodate data and voice wire management shall be completely coordinated with all facility systems. The Contractor's Interior Designer shall ensure the coordination of all electrical/data and furniture locations. The Contractor shall provide and coordinate all telecommunication receptacles and outlet requirements, hardwire all pre-wired furniture with the building systems and coordinate all IT and telephone connections.

E202003 1.4.2 Fixed Presentation Furnishings

Provide markerboards with porcelain on steel writing surfaces. Coordinate with building construction to include appropriate blocking or structural support for the installation of markerboards and tackboards.

E202003 1.4.3 Movable Presentation Furnishings

Provide audio-visual carts, lecterns, multi-media presentation cabinets to accommodate power/data requirements.

E202003 1.5 DINING ROOM FURNISHINGS

E202003 1.5.1 Cafeteria, Dining Hall Furnishings

Provide stackable seating and associated dollies for transport and storage, tables with folding or fixed legs or flip tops, and associated mobile carts for transport and storage, and trash and recycling containers.

E202003 1.5.2 Executive Dining Furnishings

Provide premium quality dining furnishings to include tables, chairs, buffet and serving units, hutches and cabinets as require by the Project Program.

E202004 RUGS & ACCESSORIES

E202004 1.1 RUGS

Provide Area or Accent rugs. Refer to the Project Program for requirements.

E202004 1.2 LAMPS

Provide decorative lamps. Refer to the Project Program for requirements.

E202004 1.3 INTERIOR LANDSCAPING

Provide artificial plants of a variety of sizes and 'species' to provide interior landscaping, including planters or containers for artificial plants to coordinate with the interior finishes and furnishings of the project.

E202004 1.4 OTHER DECORATIVE ITEMS

Refer to the Project Program for requirements.

E202090 OTHER MOVABLE FURNISHINGS

E202090 1.1 MISCELLANEOUS ITEMS

E202090 1.1.1 Containers

Provide waste receptacles, recycling containers, and ash urns as required.

E202090 1.1.2 Accessories

Provide clocks, wall mounted or freestanding literature and coat racks, and mirrors as required.

E202090 1.1.3 Small Equipment

Provide small appliances such as coffee pots, microwaves, refrigerators, washers, dryers, and icemakers, as required.

E202090 1.1.4 Special Equipment

Provide mailroom work and storage tables, mail sorter units, carts and equipment tables as required.

-- End of Section --

SECTION G10

SITE PREPARATION
8/08

G10 GENERAL

G10 1.1 DESIGN GUIDANCE

Provide the design and installation in accordance with the following references. This Performance Technical Specification (PTS) adds clarification to the fundamental requirements contained in the following Government Standards. The general requirements of this PTS section are located in PTS Section Z10, *General Performance Technical Specification*.

G10 1.1.1 Industry Standards and Codes

Refer to UMRL for reference designation identification.

G10 1.1.2 Government Standards

CORPS OF ENGINEERS (COE)

COE EM 385-1-1, *Safety and Health Requirements Manual*

UNIFIED FACILITIES CRITERIA (UFC)

UFC 3-200-10N, *Civil Engineering*

UFC 3-220-01N, *Geotechnical Engineering*

UFC 3-800-10N, *Environmental Engineering for Facility Construction*

UNIFIED FACILITIES GUIDE SPECIFICATIONS (UFGS)

UFGS 31 23 00.00 20, *Excavation and Fill*

G10 1.2 PERFORMANCE VERIFICATION AND ACCEPTABLE TESTING

Compliance with the requirements will be determined by a review of the design and construction submittals and by field inspection. See Section 01 33 10.05 20, *Design Submittal Procedures*, and Section 01 33 00.05 20, *Construction Submittal Procedures*, for additional requirements.
Verification of satisfactory earthwork performance shall be via testing detailed in the paragraph, "Field Quality Control", in UFGS Specification Section 31 23 00.00 20, *Excavation and Fill*.

G10 1.3 DESIGN SUBMITTALS

Design Submittals shall be in accordance with UFGS section 01 33 10.05 20, *Design Submittal Procedures*, UFC 1-300-09N, *Design Procedures*, UFC 3-200-10N, *Civil Engineering*, and UFC 3-220-01N.

In addition, UFGS sections listed below or in the body of the PTS text are to be used by the Designer of Record (DOR) as a part of the design submittal. If the UFGS products or systems are applicable to the project, the DOR shall edit these referenced UFGS sections and submit them as a part of the design submittal specification. Edit the specification sections in accordance with the limitations stated in PTS section Z10, *General Performance Technical Specifications*.

UFGS 31 23 00.00 20 (02315N), *Excavation and Fill*

G10 1.4 CONSTRUCTION SUBMITTALS

Submit construction submittals in accordance with PTS Section Z10, *General Performance Technical Specifications*. In addition to the Z10 requirements, the Designer of Record (DOR) shall approve the following construction submittals as a minimum:

Submittals in UFGS 01 57 19.05 20 (01577N), Temporary Environmental Controls for Design-Build

Submittals in UFGS Specification Section 31 23 00.00 20 (02315N), Excavation and Fill

Demolition plan in accordance with Section 01 74 19, Construction and Demolition Waste Management

G10 1.5 GEOTECHNICAL REPORT

G10 1.5.1 Subsurface Soils Information

Any provided subsurface soil information is included for the Contractor's information only, and is not guaranteed to fully represent all subsurface conditions. The data included in this RFP are intended for proposal preparation and preliminary design only. The Contractor shall perform, at his expense, such subsurface exploration, investigation, testing, and analysis as his Designer of Record deems necessary for the design and construction of the site improvements.

G10 1.5.2 Contractor-provided Geotechnical Engineer

The Contractor-provided Geotechnical Engineer is required to be experienced with soil conditions in the region where the project site is located. The Geotechnical Engineer shall evaluate the RFP data, obtain and evaluate all additional data as required to support the design and construction, and prepare a Geotechnical Report.

All work by the Contractor-provided Geotechnical Engineer at the project location, if required, shall be coordinated with the Contracting Officer and shall not interfere with normal base operations. A minimum of two weeks prior to the Foundation Work Design submittal, provide the Contractor's Geotechnical Report (an Adobe Acrobat PDF version on CD and two printed copies) for review and record keeping purposes. The report shall become the property of the Government. Provide the geotechnical reports generated during construction, such as pile driving results and analysis. In addition, provide an Adobe Acrobat PDF version and two printed copies for record keeping purposes.

G10 1.5.3 Contractor-Provided Geotechnical Report

Submit a written Geotechnical report based upon Government-provided subsurface investigation data, and all additional field and laboratory testing, accomplished at the discretion of the Contractor’s Geotechnical Engineer. The Geotechnical Report shall include the following:

a. The project site description, vicinity map and site map indicating the location of borings and any other sampling locations. Provide 24 hour groundwater observations for at least 20% of the borings, minimum one boring. Provide notes explaining any abbreviations or symbols used and describing any special site preparation requirements.

b. Results of all applicable field and laboratory testing, whether Government or Contractor-provided. Address existing subsurface conditions, selection and design of the foundation and floor slab, all underground construction including utility installation and all other site specific requirements (such as soil stabilization and slope stability).

c. Engineering analysis, discussion and recommendations Addressing:

1) Settlement analysis - Settlement shall be limited as required in EM 1110-1-1904 "Settlement Analysis".

2) Bearing Capacity analysis

3) Foundation selection (shallow, deep, special) and construction considerations; dimensions, and installation procedures.

4) Site preparation (earthwork procedures and equipment, compaction requirements, building slab preparation (as applicable), soil sensitivity to weather and equipment, groundwater influence on construction, mitigation of expansive soils or liquefaction potential, and dewatering requirements).

5) Sheeting and shoring considerations, as applicable.

6) Pavement design calculations with parameters defined, actual or assumed, and recommended thicknesses and materials.

7) Haul routes and stockpile locations for earthwork, as applicable.

8) Calculations to support conclusions and recommendations.

9) Recommendations shall be presented on a structure-by-structure basis.

The Geotechnical Report shall be signed by a registered Geotechnical Engineer.

The submitted report shall be accompanied by a cover letter identifying any report recommendations proposed to be adopted into the design which are interpreted by the Contractor as a changed condition to the Geotechnical or Pavement related requirements of the RFP.

G10 1.5.4 Geotechnical Site Data required in Design Drawings

The Contractor's final design drawings shall include the Government-provided subsurface data presented in the RFP, as well as any additional borings and laboratory test result data performed by the Contractor. The data provided shall include:

a. Logs of Borings and related summary of laboratory test results and groundwater observations. Provide 24 hour groundwater observations for at least 20% of the borings, minimum one boring. Provide notes explaining any abbreviations or symbols used and describing any special site preparation requirements.
b. The locations of all borings shall be indicated on the drawings. The applicable design drawings shall be revised to reference the Contractor's Geotechnical Report as being a basis for design.

G1010 SITE CLEARING

G1010 1.1 GENERAL

Clear and grub project site as required for project construction.

G1010 1.2 BURNING

Where burning is permitted, adhere to the applicable federal, state, and local regulations.

G101001 CLEARING

G101001 1.1 CLEARING

The Contractor shall clear all trees, shrubs, brush and vegetation necessary for construction of the project. Clearing includes the felling, trimming, and cutting of trees into sections.

G101001 1.2 PRESERVATION

Preserve and protect trees, shrubs and vegetation not directly impacted by the construction in accordance with Section 01 57 19.00 20, *Temporary Environmental Controls*.

G101002 TREE REMOVAL

Remove and dispose of trees to a depth of at least 18 inches (450 mm) below ground surface. Fill depressions with satisfactory material and compact. Mound-fill 2 inches (50 mm) above adjacent surface to allow for settling when not part of a subbase.

G101003 STUMP REMOVAL

Remove stumps to a depth of at least 18 inches (450 mm) below ground surface and grind stumps 18 to 30 inches (450 to 750 mm) below ground surface. Fill depressions with satisfactory material and compact. Mound-fill 2 inches (50 mm) above adjacent surface to allow for settling when not part of a subbase.

G101004 GRUBBING

Within the clearing limits, remove and dispose of all logs, shrubs, brush, matted roots, roots larger than 2 inches (50 mm) in diameter, and other debris to a depth of at least 18 inches (450 mm) below ground surface. Fill depressions made by grubbing with satisfactory material and compact to make the new surface conform to the adjacent surface of the ground.

G101005 SELECTIVE THINNING

G101005 1.1 TREE THINNING

Trim trees to remain of dead branches 1-1/2 inches (38 mm) or more in diameter. Neatly cut limbs and branches to be trimmed close to the bole of the tree or main branches.

G101006 DEBRIS DISPOSAL

Prevent spillage on pavements, streets, or adjacent areas. Dispose of all surplus and unsuitable material off of Government property.

G1020 SITE DEMOLITION & RELOCATIONS

G1020 1.1 GENERAL

Demolition work shall include the demolition, removal, and legal disposal of existing construction debris, as required, to accommodate the new construction. The Contractor shall take care to prevent damages to existing utilities, construction and materials not scheduled for demolition, repair or replacement, and shall repair damages to the construction and materials to the satisfaction of the Contracting Officer and at no additional cost to the Government.

G1020 1.2 AUTHORIZATION

Do not begin demolition until the Demolition Plan has been approved by and authorization is received from the Contracting Officer.

G1020 1.3 TITLE TO MATERIALS

Whenever possible, all features demolished shall be salvaged or recycled in lieu of being disposed of as waste in a landfill. Existing features to be demolished which are not salvageable or reused, shall become the property of the Contractor and shall be removed from project site. The Government will not be responsible for the condition, loss of, or damage to, such property after contract award. Materials and equipment shall not be viewed by prospective purchasers or sold on the site.

G1020 1.4 REUSE OF MATERIALS AND EQUIPMENT

Remove and store materials and equipment to be reused or relocated to prevent damage, and reinstall as the work progresses.

G1020 1.5 SALVAGED MATERIALS AND EQUIPMENT

Salvage materials and equipment that are to be removed by the Contractor and that are to remain the property of the Government, and deliver to a storage site on the station in accordance with instructions of the Contracting Officer.

G102002 ABOVEGROUND SITE DEMOLITION

G102002 1.1 DUST AND DEBRIS CONTROL

Prevent the spread of dust and debris to occupied portions of a building or on pavements and avoid the creation of a nuisance or hazard in the surrounding area. Do not use water for dust control if it results in hazardous or objectionable conditions such as, but not limited to, ice, flooding, or pollution. Sweep pavements as often as necessary to control the spread of debris that may result in foreign object damage potential to aircraft.

G102002 1.2 PROTECTION

G102002 1.2.1 Traffic Control

Where pedestrian and driver safety is endangered in the area of removal work, use traffic barricades with flashing lights. Provide temporary traffic control in accordance with UFC 3-200-10N, *Civil Engineering*.

G102002 1.2.2 Foreign Object Damage (FOD)

The Contractor shall take all measures necessary to prevent the deposition of FOD potential debris on or adjacent to operational airfield pavements. The Contractor shall install jersey barriers with lights and remove them as required. The Contractor shall immediately remove all such debris that appears on airfield pavements due to his construction activity.

G102002 1.2.3 Existing Work

Protect existing work that is to remain in place, be reused, or remain the property of the Government. At no additional expense to the government, repair all items that are damaged during performance of the work to their original condition, or replace with new. Do not overload pavements to remain.

G102002 1.2.4 Noise Pollution

Make the maximum use of low-noise emission products, as certified by the EPA.

G102002 1.3 PAVING AND SLABS

Remove concrete and asphaltic concrete paving and slabs as required for construction of project. Remove the existing aggregate base in areas to receive new pavement to the depth of the proposed pavement section below new finish grade. Remove the existing aggregate base in areas not to receive new pavement to a depth of 8 inches (200 mm) below existing adjacent grade and break remaining pavement (if any) to allow drainage. Provide neat sawcuts at limits of pavement removal; protect sawcuts so that new pavement will butt against the existing without feathering.

G102003 UNDERGROUND SITE DEMOLITION

G102003 1.1 UTILITY TERMINATION

Terminate utilities in accordance with state and local rules and regulations; the nationally recognized code; and the requirements of the utility provider covering the specific utility; UFC 3-200-10N, *Civil Engineering*; and approved by the Contracting Officer.

G102003 1.2 PROTECTION OF EXISTING UTILITIES

Protect existing utilities to remain. Where removal of existing utilities and pavement is required, provide approved barricades, temporary covering of exposed areas, and temporary services or connections. Repair damage to existing utilities to remain at no additional expense to the government.

G102005 UTILITY RELOCATION

Repair relocated items that are damaged or replace damaged items with new undamaged items as approved by the Contracting Officer and at no additional expense to the government.

G102007 SITE CLEANUP

Remove rubbish and debris from the station daily; do not allow accumulations inside or outside the building(s) or on pavements. Store materials that cannot be removed daily in areas specified by the Contracting Officer.

G1030 SITE EARTHWORK

G1030 1.1 GENERAL

This section includes the design and construction requirements for earthwork and grading related to construction of the roadways, parking, paved areas and other related sitework. Refer to Section A10 for earthwork related to construction of structures, including building, footings, foundations, retaining walls, slabs, tanks, and utility appurtenances.

The Designer of Record shall utilize UFGS Specification Section 31 23 00.00 20, *Excavation and Fill*, for the project specification, and shall submit the edited specification section as a part of the design submittal for the project.

G103001 GRADING

G103001 1.1 ELEVATIONS

Establish finish floor elevations as required by UFC 3-200-10N, *Civil Engineering*.

G103001 1.2 SITE GRADING

The Contractor shall preserve natural topographic features to minimize the impact on the existing drainage patterns at and adjacent to the site. Provide site grading in accordance with the requirements of the UFC 3-200-10N, *Civil Engineering*.

G103001 1.3 FINISHED SURFACES

Finish grading shall provide drainage towards new and existing drainage features. Finish grading shall not result in low spots that hold water or that direct runoff towards new or existing facilities or site amenities. Finish grading shall be in accordance with the requirements of the UFC 3-200-10N, *Civil Engineering*.

G103002 COMMON EXCAVATION

The Contractor shall preserve natural topographic features to minimize cut and fill requirements. All unsuitable material and surplus excavation shall become the property of the Contractor and shall be disposed of as indicated in the Project Program.

G103003 ROCK EXCAVATION

Provide if blasting is not allowed.

G103004 FILL & BORROW

G103004 1.1 SOURCES

Where sufficient topsoil and satisfactory materials are not available from required excavations on the project site, provide suitable borrow materials from an offsite source.

G103004 1.2 UNSATISFACTORY SOIL MATERIALS

Remove unsatisfactory soil materials from the site in accordance with the Project Program and replace with satisfactory soil materials in accordance with UFGS Specification Section 31 23 00.00 20, *Excavation and Fill*.

G103004 1.3 TOPSOIL

Refer to Section G2050, "Landscaping". Remove unsatisfactory, existing topsoil from the site in accordance with the Project Program.

G103005 COMPACTION

Provide compaction in accordance with UFGS Specification Section 31 23 00.00 20, *Excavation and Fill*, and the recommendations of the Contractor's Geotechnical Engineer, whichever is greater.

G103006 SOIL STABILIZATION

Provide soil stabilization designed to function as required by site conditions in accordance with the State Highway specifications and standards in the state where the project is located. Apply and install geosynthetics in accordance with the manufacturer's written instructions.

G103007 SLOPE STABILIZATION

Provide slope stabilization methods in accordance with the State Highway specifications and standards in the state where the project is located. Design and install manufactured products, gabions, geogrids, and rock anchors in accordance with the manufacturer's written instructions.

G103008 SOIL TREATMENT

G103008 1.1 TERMITE CONTROL

Refer to Section A1010 1.2, "Termite Control".

G103008 1.2 RODENT AND VEGETATION CONTROL

Prevent and eliminate standing water.

G103009 SHORING

Provide sheeting, shoring, bracing, cribbing and underpinning in accordance with the Army Corps of Engineer's Safety and Health Requirements Manual (COE EM 385-1-1), UFC 3-220-01N, *Geotechnical Engineering*, UFC 3-300-10N, *Structural Engineering*, and all other applicable Federal, State and local codes and requirements

Provide protection of existing structures.

G103010 TEMPORARY DEWATERING

The design of the temporary dewatering system shall account for soil conditions, rainfall, fluctuations in the groundwater elevations and the potential settlement impact on adjacent facilities due to dewatering. Provide dewatering in accordance with UFGS Specification Section 31 23 00.00 20. While the excavation is open, the water level shall be maintained continuously, at least 1.0 foot (0.30 m) below the working level.

French drains, sumps, ditches or trenches will not be permitted within 3 feet (0.9 m) of the foundation of any structure without written approval of the NAVFAC Civil/Geotechnical Reviewer.

G103011 TEMPORARY EROSION & SEDIMENT CONTROL

G103011 1.1 TEMPORARY EROSION & SEDIMENT CONTROL

Develop and implement temporary erosion and sediment control measures and other Best Management Practices (BMPs) prior to or in conjunction with commencement of earthwork in accordance with the state Erosion and Sediment Control Laws and Regulations. Remove all non-permanent erosion control measures after vegetation is fully established.

G103011 1.2 MAINTENANCE

Maintain temporary erosion control measures in accordance with state Erosion and Sediment Control Laws and Regulations throughout the project until areas are fully stabilized.

G103090 OTHER SITE EARTHWORK

G103090 1.1 HISTORIC AND ARCHAEOLOGIC ARTIFACTS

Refer to Section 01 50 00.05 20, *Temporary Facilities and Controls for Design-Build*, in Part 2 of this RFP.

G103090 1.2 PIPELINE CASING UNDER RAILROADS OR PAVEMENTS

Where required by code or local practice provide casing for piping under railroads or pavements. The Contractor is responsible for obtaining permits from all government and nongovernment owners/agencies in designing and providing the work.

G103090 1.3 TOPSOIL AND SEED

Provide topsoil and seed according to UFGS Specification Section 31 23 00.00 20, *Excavation and Fill*, except when landscaping is required.

G1040 HAZARDOUS WASTE REMEDIATION

G1040 1.1 EXCAVATION

Perform excavation of contaminated soil and groundwater as indicated in the RFP, in accordance with the ESR and the approved contaminated soil and groundwater removal work plan as described in Section 01 57 19.00 20, *Temporary Environmental Controls*. Areas of contamination shall be excavated to the depth noted elsewhere in the RFP. Select methods and equipment to minimize disturbance to areas beyond the limits of the excavation area. Material that becomes contaminated as a result of the Contractor's operations shall be removed and disposed of at no additional cost to the Government. Where excavation extends into groundwater levels, dewatering methods shall be employed on a localized basis to facilitate excavation operations. Water generated by dewatering during excavation shall be collected and tested in accordance with the ESR and the approved work plan.

Water that contains contaminants above the levels indicated in the ESR shall be disposed of in accordance with the ESR and the approved work plan.

Non-contaminated water may be disposed of on-site.

G1040 1.2 STOCKPILED SOILS

Soils determined to be contaminated in accordance with the criteria in the ESR must be stockpiled in accordance with the contaminated soil and groundwater removal work plan as described in Section 01 57 19.00 20, *Temporary Environmental Controls*, and shall be disposed of in accordance with the requirements of the ESR.

Soils that are determined to contain contaminants below the criteria listed in the ESR may be used as clean fill.

G1040 1.3 CLEAN FILL

Soils that are determined as clean fill via testing shall be backfilled and compacted in accordance with the requirements listed in the ESR.

G1040 1.4 SPILLS

In the event of a spill or release of hazardous substances, pollutant, contaminant or oil, notify the Contracting Officer immediately. Containment actions shall be taken immediately to minimize the effect of any spill or leak. Clean up shall be performed at the Contractor's expense in accordance with the ESR and the approved spill work plan as described in Section 01 57 19.00 20, *Temporary Environmental Controls*.

G1040 1.5 DISPOSAL

All waste materials shall become the property of the Contractor and shall be transported, disposed of in accordance with the criteria listed in the ESR and the approved disposal plan as described in Section 01 57 19.00 20, *Temporary Environmental Controls*.

-- End of Section --

SECTION G20

SITE IMPROVEMENTS
4/08

G20 GENERAL

G20 1.1 DESIGN GUIDANCE

Provide the design and installation in accordance with the following references. This Performance Technical Specification (PTS) adds clarification to the fundamental requirements contained in the following Government Standards. The general requirements of this PTS section are located in PTS Section Z10, *General Performance Technical Specification*.

G20 1.1.1 Industry Standards and Codes

AMERICAN SOD PRODUCERS ASSOCIATION (ASPA)

NATIONAL FEDERATION OF STATE HIGH SCHOOL ASSOCIATIONS (NF)

U.S. CONSUMER PRODUCT SAFETY COMMISSION, PUBLICATION NUMBER 325

G20 1.1.2 Government Standards

U.S. GENERAL SERVICES ADMINISTRATION (GSA)

FS RR-F-191, *Fencing and Wire and Post Metal (and Gates, Chain-link Fence Fabric, and Accessories)*

CORPS OF ENGINEERS (COE)

TM 5-822-5, *Pavement Design for Roads, Streets, Walks, and Open Storage Areas*

NAVAL FACILITIES ENGINEERING COMMAND (NAVFACENGCOM)

Military Handbook, MIL-HDBK-1013/14: *Selection and Application of Vehicle Barriers*

UNIFIED FACILITIES CRITERIA (UFC)

UFC 1-300-09N, *Design Procedures*

UFC 3-200-10N, *Civil Engineering*

UFC 3-201-02, *Landscape Architecture*

UFC 3-210-04, *Children's Outdoor Play Areas*

UFC 3-220-01N, *Geotechnical Engineering*

UFC 3-270-01, O&M: *Asphalt Maintenance and Repair*

UFC 3-270-02, O&M: *Asphalt Crack Repair*

UFC 3-270-03, O&M: *Concrete Crack and Partial Depth Spall Repair*

UFC 3-270-04, O&M: *Concrete Repair*

UFC 3-800-10N, *Environmental Engineering for Facility Construction*

UNITED FACILITIES GUIDE SPECIFICATIONS (UFGS)

32 11 26.16, *Bituminous Concrete Base Course*

32 11 36.13, *Lean Concrete Base Course*

32 11 33, *Cement Stabilized [Base] [Subbase] Course at Airfields and Roads*

32 11 30, *Lime Treated Subgrade [Lime Modified Soils]*

32 11 16.16, *[Base Course for Rigid] [and Subbase Course for Flexible] Paving*

32 11 24, *Graded Crushed Aggregate Base Course for Flexible Pavement*

32 11 16.13, *Sand-Clay [Base] [Subbase] Course*

32 12 17, *Hot Mix Bituminous Pavement*

32 13 13.03, *Airfields and Heavy-Duty Concrete Pavement Less Than 10,000 Cubic Yards*

32 13 13.06: *Portland cement Concrete Pavement for Roads and Site Facilities*

G20 1.2 QUALITY ASSURANCE

G20 1.2.1 Qualifications of Tree Location Contractor

Contractor shall be a professional tree moving company holding landscape contractor's license in the state where the work is to be performed and have a minimum ten years of tree relocation experience.

G20 1.2.2 Qualifications of New Landscape Contractor

Construction Company shall hold a landscape contractor's license in the state where the work is to be performed and have a minimum five years of landscape construction experience.

G20 1.3 PERFORMANCE VERIFICATION AND ACCEPTANCE TESTING

Compliance with the requirements will be determined by a review of the design and construction submittals and by field inspection. See Section 01 33 10.05 20, *Design Submittal Procedures*, and Section 01 33 00.05 20, *Construction Submittal Procedures*, for additional requirements.

Verification of satisfactory performance shall be via Performance Verification, as detailed in this section of the RFP. Verification of satisfactory performance shall also be via testing as detailed in the paragraph, Field Quality Control, in applicable UFGS Specification Sections utilized.

G20 1.3.1 Subgrade Preparation Performance Verification

Perform subgrade preparation in accordance with PTS Section G10 and the approved design documents. If required by the Designer of Record, perform proof rolling. Proof rolling shall be performed in the presence of the Contracting Officer. Rutting or pumping of material shall be undercut as directed by the Designer of Record and replaced with satisfactory soil materials.

G20 1.3.2 Base Course Performance Verification

G20 1.3.2.1 Aggregate Base Course

a. Sampling: ASTM D 75.
b. Gradation: ASTM C 136.
c. Thickness: Confirm in-place compacted thickness. Acceptable tolerances are plus or minus 0.5 inches (13 mm). Perform one test for every 500 square yards; minimum 2 tests.
d. Density: ASTM D 1556 or ASTM D 2922 and ASTM D 3017. Perform one field test for every 1000 square yards; minimum 2 tests. ASTM D 1557, Method D; perform one laboratory test for the project.
e. Visual: Surface shall be smooth with no ruts.

G20 1.3.2.2 Other Types of Base Courses

For other types of base courses, provide field testing in accordance with the SHS.

G20 1.3.3 Bituminous Concrete Pavement Performance Verification

a. Visual: Finished surface shall be uniform in texture and appearance and free of cracks and creases.
b. Sampling: ASTM D 979.
c. Job Mix: Determine gradation and bitumen content. Provide one sample for every 400 tons; minimum 1 test.
d. Thickness: ASTM D 3549. Confirm in-place compacted thickness. Acceptable tolerances are plus or minus 0.5 inches (13 mm) for bituminous base course and plus or minus 0.25 inches (6 mm) for bituminous surface course. Provide one test for every 500 square yards; minimum 2 tests.
e. Surface Smoothness: Test surface smoothness by using a 10 foot (3 meter) straightedge in transverse and longitudinal directions to pavement. Acceptable tolerances are plus or minus 0.25 inches (6 mm) for bituminous base and surface courses.
f. Density: Conduct field density of in-place compacted pavement in accordance with ASTM D 2950 and correlated with ASTM D 1188 or ASTM D 2726. Provide one field test for every 1000 square yards; minimum 2 tests. Provide one laboratory test for the project.

G20 1.3.4 Portland cement Concrete Pavement Performance Verification

a. Visual: Finished surface shall be uniform in texture and appearance and free of cracks.
b. Sampling: ASTM C 31M (ASTM C 31).
c. Thickness: Acceptable tolerances are plus or minus 0.5 inches (13 mm). Provide one test for every 500 square feet; minimum 2 tests.

d. Surface Smoothness: Test surface smoothness by using a 10 foot (3 meter) straightedge in transverse and longitudinal directions to pavement. The finished surfaces of the pavements shall have no abrupt change of 0.12 inch (3 mm) or more.

e. Strength: Samples for strength tests of each mix design of concrete placed each day shall be taken not less than once a day, nor less than once for each 100 cubic yards (120 cubic meters) of concrete, nor less than once for each 5000 square feet (500 square meters).

1) Compressive Strength: ASTM C 39. Make five test cylinders for each set of tests. Test two cylinders at 7 days, two cylinders at 28 days, and hold one cylinder in reserve. Each strength test result shall be the average of two cylinders from the same concrete sample tested at 28 days. If the average of any three consecutive strength test results is less than f'c, or if any strength test result falls below f'c by more than 500 psi, take a minimum of three ASTM C 42 core samples from the in-place work represented by the low test cylinder results and test. Concrete represented by core test shall be considered structurally adequate if the average of three cores is equal to at least 85 percent of f'c and if no single core is less than 75 percent of f'c. Locations represented by erratic core strengths shall be retested.

2) Flexural Strength: ASTM C 78. Make four test specimens for each set of tests. Test two specimens at 28 days, and the other two at 90 days. Concrete strength will be considered satisfactory when the minimum of the 90-day test results equals or exceeds the specified 90-day flexural strength, and no individual strength test is less than the design strength. If the ratio of the 28-day strength test to the specified 90-day strength is less than 65 percent, make necessary adjustments for conformance.

f. Remove concrete not meeting strength criteria and provide new acceptable concrete at no expense to the government. Repair core holes with nonshrink grout. Match color and finish of adjacent concrete.

G20 1.3.5 Concrete Joint Performance Verification

Install a test section of 500 linear feet (150 m) at start of sealing operation for each type sealant to be used. Obtain approval of test section by Contracting Officer prior to installing additional joint seal. Joint sealer that fails to cure properly, or fails to bond to joint walls, or reverts to uncured state or fails in cohesion, or shows excessive air voids, blisters, or has surface defects, swells, or other deficiencies, or is not recessed within indicated tolerances shall be rejected. Remove rejected sealer and reclean and reseal joints.

G20 1.3.6 Topsoil Performance Verification

Prior to planting design, provide a commercial soil analysis. Amend planting areas based on the soil test's interpretation, amendment type, and quantity recommendations (including soil nutrients and texture, with percentages shown). Additional topsoil shall be used only in areas where soil analysis shows that the existing soil is inadequate for growth of plant materials.

G20 1.3.7 Final Inspection for Planting and Irrigation

Final inspection shall be made upon written request from the Contractor at least 10 days prior to the last day of the planting and irrigation Establishment Period. The Landscape Contractor shall attend the inspection with the Contracting Officer and document the inspection. The Landscape Architect-of-Record shall also attend the inspection and provide the Contracting Officer with a letter certifying that the planting and irrigation is installed per the plans and irrigation coverage is correct and appropriate for optimum plant survival. At the end of the Establishment Period, remove all stakes and guy cables.

G20 1.3.8 Landscape and Irrigation Establishment Period and Guarantee

All transplanted trees, newly planted trees, shrubs, ground covers, turf, and irrigation systems shall be guaranteed for a period of one year after the Contracting Officer's final acceptance. This acceptance, and the submittal of irrigation as-builts and controller charts, shall begin the Establishment Period. All trees, shrubs, and ground covers that die or have 20 percent or more of their crowns that die during planting operations or the guarantee period shall be replaced with healthy plants of the same species or variety during the appropriate planting season. The Landscape Architect-of-Record shall, along with the Contracting Officer, attend, approve, and document the start of the Establishment Period and document quarterly and final inspections. During this period, the Contractor shall perform tasks which shall include, but not be limited to: watering, mowing, overseeding, fertilizing, mulching, pruning, weeding, eradicating pests (rodents, rabbits, insects, mammals and fungus), restaking, adjusting guy wires, adjusting irrigation systems, and replenishing mulch to assure all plant material is in a healthy and thriving condition or the Contractor shall replace plant material at his own expense. Broadcast seeded or hydro-seeded areas that do not achieve the 95-percent coverage by the end of the Establishment Period shall be reseeded by the same method and be maintained an additional 120 days to ensure coverage requirements are met. Turf shall be maintained in a manner that promotes proper health, growth, rich natural green color, and a neat, uniform, manicured appearance, free of bare areas, ruts, holes, weeds, pests, dead vegetation, debris, and unwanted vegetation that present an unsightly appearance. Mow weekly during the growing season and remove excess clippings.

G20 1.4 DESIGN SUBMITTALS

Design Submittals shall be in accordance with UFGS section 01 33 10.05 20, *Design Submittal Procedures*, UFC 1-300-09N, *Design Procedures*, and UFC 3-200-10N, *Civil Engineering*.

In addition, UFGS sections listed below or in the body of the PTS text are to be used by the Designer of Record (DOR) as a part of the design submittal. If the UFGS products or systems are applicable to the project, the DOR shall edit these referenced UFGS sections and submit them as a part of the design submittal specification. Edit the specification sections in accordance with the limitations stated in PTS section Z10, *General Performance Technical Specifications*.

32 11 26.16, *Bituminous Concrete Base Course*

32 11 36.13, *Lean Concrete Base Course*

32 11 33, *Cement Stabilized [Base] [Subbase] Course at Airfields and Roads*

32 11 30, *Lime Treated Subgrade [Lime Modified Soils]*

32 11 16.16, *[Base Course for Rigid] [and Subbase Course for Flexible] Paving*

32 11 24, *Graded Crushed Aggregate Base Course for Flexible Pavement*

32 11 16.13, *Sand-Clay [Base] [Subbase] Course*

32 12 17, *Hot Mix Bituminous Pavement*

32 13 13.16, *Portland cement Concrete Pavement for Roads and Site Facilities*

G20 1.5 CONSTRUCTION SUBMITTALS

Provide product data for all exterior furnishings.

Submit construction submittals in accordance with PTS Section Z10, *General Performance Technical Specifications*. In addition to the Z10 requirements, the Designer of Record (DOR) shall approve the following construction submittals as a minimum:

Provide product data for all exterior furnishings, field test reports, transporting plan, and irrigation plan.

G20 1.5.1 Transplanting Plan

A transplanting plan shall be submitted for all projects which include transplanting trees. The plan shall be submitted showing existing and proposed locations of transplanted trees. The plan shall delineate methods and times for root pruning, digging, balling, removing, storing, transporting, planting, watering, and maintenance to ensure survivability. The plan shall also include equipment, anti-desiccant, and pesticides to be used. A listing of the plant material to be transplanted shall be provided by common name and botanical name as listed under "Nomenclature" in ANSI Z60.1; classification; caliper; and height.

G20 1.5.2 As-Builts

Submit a complete set of irrigation as-builts to the Contracting Officer, to include the recording of measurements onto a record set of full-size project irrigation plans. Measurements shall locate water meters, pressure supply lines at 100 foot (30 m) intervals, backflow prevention devices, rain/freeze sensors, valves (including quick couplers and hose bibbs), controllers (and control wire, if routed separately from pressure supply line); all dimensioned from two permanent points of reference, such as building corners, sidewalks, and other permanent features.

G20 1.6 ANTITERRORISM (AT) STANDARDS

Incorporate the minimum at standards indicated in UFC 4-010-01, *DOD MINIMUM ANTITERRORISM STANDARD FOR BUILDINGS*.

G20 1.7 PROJECT LIMITATIONS

Prior to the start of design, the Contractor shall determine the exact limit-of-work line for the project periphery, considering items such as, but not limited to, utility work, landscape revegetation of disturbed areas, and laydown areas. The Designer of Record shall determine limit-of-work lines.

G2010 ROADWAYS

G2010 1.1 PAVEMENT DESIGN

Provide geometric and pavement design, including minimum pavement sections, in accordance with UFC 3-200-10N, *Civil Engineering*, and the State Department of Transportation where the project is located. Provide pavement calculations in accordance with UFC 1-300-09N, *Design Procedures*. Provide any required additional pavement design to provide a complete and useable facility.

G2010 1.2 PAVEMENT AESTHETICS

Provide surfaces consistent in color and finish.

G2010 1.3 LANDSCAPING

Designs for streets and roads shall include adequate space for trees and other landscape material.

G2010 1.4 TRAFFIC CONTROL DEVICES

New traffic control devices (i.e., signs and markings) shall be provided and installed in accordance with the United States Department of Transportation Federal Highway Administration's *Manual on Uniform Traffic Control Devices* and their standard, "Rigid Sign Supports". New traffic control devices shall also be provided along/in the existing streets adjacent to the project site as necessary to provide complete traffic control to the new facilities.

G2010 1.5 EXISTING UTILITY STRUCTURES

Existing utility structures shall be adjusted to meet the new finished pavement grades as required.

G201001 BASES & SUBBASES

Prepare subgrade in accordance with Section G10, *Site Preparation*. Geotextiles may be used for separation or reinforcement in accordance with manufacturer's instructions. Provide base course under paved areas in accordance with the State Highway specifications (SHS) in the state where the project is located.

Place base course in accordance with the SHS for that particular base course and in layers of equal thickness with no compacted layer more than 6 inches (150 mm) thick. Compact the base course at optimum moisture content to 100 percent, according to ASTM D 1557, maximum dry density.

Where SHS are not available or applicable, the Designer of Record shall utilize the applicable UFGS Specification Sections referenced under paragraph 1.1.2 entitled "Government Standards" for the project specification. Submit these specifications in edited form as a part of the design submittal for the project.

G201002 CURBS & GUTTERS

Provide concrete curbs and gutters in accordance with the SHS and standards or as specified in UFC 3-200-10N, Civil Engineering, whichever is more stringent. Where the SHS do not include concrete materials for curbs and gutters, provide concrete in accordance with the applicable standard mix of the SHS for a minimum compressive strength at 28 days of 3500 psi (25 MPa) concrete.

G201003 PAVED SURFACES

Where SHS are not available or applicable, the Designer of Record shall utilize the applicable UFGS Specification Sections referenced under paragraph 1.1.2 entitled "Government Standards" for the project specification. Submit these specifications in edited form as a part of the design submittal for the project.

G201003 1.1 PAVEMENT MIX

G201003 1.1.1 Bituminous Concrete Pavement

Provide bituminous concrete pavement in accordance with the applicable standard mix of the SHS based on the pavement design and vehicle loading indicated in this RFP.

G201003 1.1.1.1 Bituminous Concrete Placement

Bituminous concrete placement, including minimum temperature during placement, joints, and maximum lift thickness shall be in accordance with the SHS. Compact the bituminous concrete in accordance with the SHS; modified to 96 percent of maximum laboratory density.

G201003 1.1.2 Portland cement Concrete Pavement

If reinforced, the welded wire fabric shall conform to ASTM A-185. Bar reinforcement shall conform to ASTM A-615, Grade 400 (Grade 60).

Provide concrete in accordance with the applicable standard mix of the SHS for the design strength plus any allowable deviations.

G201003 1.2 JOINTS FOR PORTLAND CEMENT CONCRETE PAVEMENT

Joints shall be in accordance with SHS and the applicable portions of TM 5-822-5, *Pavement Design for Roads, Streets, Walks, and Open Storage Areas*. Joints shall be installed in a manner and at such time to prevent random or uncontrolled cracking. Joints shall form a regular rectangular pattern. Wherever curved pavement edges occur, make joints to intersect tangents to curve at right angles.

G201003 1.2.1 Expansion Joints

Provide thickened edge expansion joints at the intersection of two rigid pavements. Use preformed joint filler, ASTM D 1751. Filler must be compatible with joint sealer material. Preformed joint filler shall be securely held in position during concreting operations.

G201003 1.2.2 Isolation Joints

Provide thickened edge isolation joints by placing a 1/2-inch (12 mm) preformed joint filler (ASTM D 1751) around each structure that extends into or through the pavement before concrete is placed at that location.

G201003 1.2.3 Contraction Joints

Joint lines shall be sawed within specified tolerance, straight, and extend for width of transverse joint, and for entire length of longitudinal joint.

G201003 1.2.4 Construction Joints

If an emergency stop occurs remove the concrete back to location of transverse joint and install a construction joint.

G201003 1.2.5 Joint Sealants

ASTM D 5893: Provide single component cold-applied silicone. Silicone sealant shall be self-leveling and non-acid curing.

G201003 1.2.6 Preformed Compression Seals

Use performed compression seals in areas where silicone joint sealant does not perform, such as areas subject to water inundation, blasts, or constant/repeated fuel spillage.

ASTM D 2628, ASTM D 2835: for lubricant.

G201003 1.3 PRIME COAT

Use of prime coat is not required. If used, prime coat shall be emulsified asphalt materials applied in accordance with the SHS. .

G201003 1.4 TACK COAT

Tack coat is required for bituminous pavement overlays and on vertical cut faces of pavement patches. Tack coat shall be in accordance with the SHS.

G201003 1.5 PAVEMENT PATCHES

Provide pavement patches for existing pavements where required for installation of utility trenches. Sawcut 12 inches beyond edge of trench. Thicknesses of pavement materials shall be equal to or greater than the existing pavement section.

For spalls or repairs of existing concrete pavement, perform repairs in conformance with UFC 3-270-03, *O&M: Concrete Crack and Partial Depth Spall Repair*, and UFC 3-270-04, *O&M: Concrete Repair*. Spall repair materials shall be either Rapid Setting Cementitious Concrete (RSCC), epoxy concrete, or polymer-modified Portland Cement (non-sag mortar) products specially formulated for spall repairs, with a proven record (in service at least three years) of satisfactory use under loading and environmental conditions similar to those at the location of intended use. A manufacturer's data sheet and certificate supporting the satisfactory use shall be provided to the Contracting Officer with the design. A product manufacturer's representative shall be present during the initial two days of product application to verify that manufacturer's instructions for use are adhered to. The Contracting Officer shall be given 7 days notice prior to the initial application in order to be present.

G201004 MARKING & SIGNAGE

G201004 1.1 MARKING

Pavement markings shall be in accordance with the SHS. Materials shall be designed for life expectancy of at least 3 years under an average daily traffic count per lane of approximately 9000 vehicles. Water based paints shall have durability rating of at least 4 when determined in the wheel path area.

Provide a half-rate initial marking application on bituminous pavements. Provide the remaining application at the end of the normal curing period.

G201004 1.2 SIGNAGE

Provide signage in accordance with the MUTCD.

G201005 GUARDRAILS & BARRIERS

G201005 1.1 GUARDRAILS

Provide guard (guide) rails in accordance with the SHS. Where the SHS do not include materials for guardrails, provide guardrails in accordance with the applicable portions of the *AASHTO Roadside Design Guide*.

G201005 1.2 BOLLARDS

Bollards shall be 4" diameter minimum steel pipe filled with concrete and embedded in a Portland cement concrete foundation. Bollards associated with passive barrier systems are specified in Section G204004, "Security Structures".

G201006 RESURFACING

Adjust rims of existing utility structures to match proposed grades after resurfacing.

G201006 1.1 SLURRY SEAL

Provide in accordance with ASTM D 3910 and the SHS.

G201006 1.2 BITUMINOUS CONCRETE OVERLAY

Remove old pavement by cold milling to depths required to provide new surface and leave underlying materials intact. Clean the pavement of excessive dirt, clay, or other foreign matter with power brooms and hand brooms immediately prior to the milling operation.

Repair or replace damaged utility structures, valve boxes, or pavement that is torn, cracked, gouged, rutted, broken, or undercut at no addition expense to the government.

Provide bituminous concrete overlay produced from hot or cold recycling of the milled material or from virgin materials in accordance with the applicable provisions of UFC 3-200-10N, *Civil Engineering*, and the standard mix of the SHS based on the pavement design and vehicle loading as indicated in this RFP.

G201006 1.3 CRACK SEALING

Fiber reinforced crack sealer shall be used for sealing cracks in asphalt pavement after milling and prior to resurfacing. Crack sealing shall conform to the following requirements in UFC 3-270-01, *O&M: Asphalt Maintenance and Repair*, and UFC 3-270-02, *O&M: Asphalt Crack Repair*.

G2020 PARKING LOTS

G202001 BASES & SUBBASES

Refer to Section G201001.

G202002 CURBS & GUTTERS

Refer to Section G201002.

G202003 PAVED SURFACES

Refer to Section G201003.

G202004 MARKING & SIGNAGE

Refer to Section G201004. Provide water-based paints only.

Mark neatly to denote traffic lanes and parking spaces; mark in accordance with the requirements of UFC 3-200-10N, *Civil Engineering*.

G202005 GUARDRAILS & BARRIERS

Refer to Section G201005.

G202005 1.1 WHEELSTOPS

Provide precast concrete wheelstops.

G202006 RESURFACING

Refer to Section G201006.

G2030 PEDESTRIAN PAVING

Locate new sidewalks such that they maintain continuity of pedestrian traffic to and from the existing sidewalks adjacent to the site(s).

G203001 BASES & SUBBASES

Provide as required by local standards or geotechnical report; refer to Section G201001.

G203003 PAVED SURFACES

G203003 1.1 SIDEWALKS

Sidewalks shall be Portland cement concrete pavement, 4 inches (100 mm) thick minimum. Provide concrete in accordance with the applicable standard mix of the SHS for a minimum compressive strength at 28 days of 3500 psi (25 MPa) concrete. Sidewalks shall be at least 5 feet (1.5 meters) wide, except that sidewalks connecting entry points of housing units to the housing unit's parking shall be at least 36 inches (900 mm) wide. Use the maximum percentage of fly ash allowed in the applicable standard mix of the SHS. In housing areas, offset sidewalks paralleling streets to maintain a minimum grassed separation of 5 feet (1.5 meters) from the back face of the curb to the closest edge of the sidewalk.

Provide a broomed finish. Unless indicated otherwise, provide a transverse slope of 1/48. Limit variation in cross section to 0.25 inch in 5 feet (6 mm in 1.50 m).

G203003 1.1.1 Joints

Provide contraction joints spaced at intervals equivalent to the width of the sidewalk. Provide 0.5 inch (13 mm) thick transverse expansion joints at changes in direction where sidewalk abuts curb, steps, rigid pavement, or other similar structures; space expansion joints every 50 feet (15 m) maximum. Provide isolation joints by placing 1/2-inch (12 mm) preformed expansion joint fillers around each structure that extends into or through the sidewalk before concrete is placed at that location.

G203003 1.2 CONCRETE PAVERS

G203003 1.3 HANDICAPPED RAMPS

Provide handicapped ramps of Portland cement concrete pavement with a minimum compressive strength at 28 days of 3500 psi (25 MPa) and an exposed aggregate finish, truncated domes, or as required by the SHS at roadway intersections.

G203004 GUARDRAILS & BARRIERS

Refer to Section G201005.

G2040 SITE DEVELOPMENT

G204001 FENCING & GATES

G204001 1.1 CHAIN LINK FENCE

Aluminum fabric, posts, or accessories shall not be used.

Chain link fence fabric shall be at least 9 gauge (3 mm) steel wire mesh material (before any coating) with mesh openings not larger than 2 inches (51 mm). Install fence in accordance with ASTM F 567 and the manufacturer's written installation instructions.

G204001 1.1.1 Tensions Wires and Top Rails

Provide rails in accordance with FS RR-F-191/3, Class 1, steel pipe, Grade A.

G204001 1.1.2 Gates

Provide gates in accordance with FS RR-F-191/2 with posts and fabric as specified for fence.

G204001 1.1.3 Posts and Braces

Provide posts and braces in accordance with FS RR-F-191/3, Class 1, steel pipe, Grade A. Each gate, terminal, and end post will be braced with truss rods.

G204001 1.1.4 Fencing Accessories

Provide fencing accessories in accordance with FS RR-F-191/4. If PVC coating is required, provide accessories with PVC color coating similar to that specified for chain-link fabric or framework.

G204001 1.2 ORNAMENTAL FENCE

G204001 1.3 SECURITY FENCE

Provide security fencing systems in accordance with UFC 3-200-10N, *Civil Engineering*, and this RFP.

G204001 1.3.1 Chain Link Security Fence

Provide chain link fence in accordance with paragraph G204001 – 1.1, excepted as noted otherwise. Ensure that the fabric has twisted and barbed selvage at the top and bottom. Do not provide top rails. All posts and structural supports shall be located on the inner side of the fencing. Outriggers shall be installed facing outward except when the fence must be mounted directly on the property line.

G204001 1.3.2 Signage

Provide signage at a minimum of 200 foot (61 m) intervals along the entire perimeter.

G204001 1.3.3 Drainage Culverts and Utility Openings

Provide protective measures to prevent access through culverts, storm drains, sewers, air intakes, exhaust tunnels, and utility openings or across drainage ditches or swales.

G204001 1.4 OPENINGS IN PERIMETER AND SECURITY FENCING

Openings in perimeter fencing and security fencing shall not be covered, blocked, or laced with material which would prevent a clear view of personnel, vehicles, or material in the outer or inner vicinity of the fence line.

G204001 1.5 FENCE GROUNDING

Ground fencing on either side of every gate and at other locations when the fencing is near, and parallel to, high-tension power lines. Grounding shall also be at intervals of 1000 feet (305 meters) to 1500 feet (457 meters) when the fencing runs through isolated areas and at lesser distances depending on the proximity of the fencing to public roads, highways and buildings where the fencing is around or within any explosive storage, production, operating or handling areas.

G204001 1.6 ENCLOSURES FOR UTILITY EQUIPMENT

Where fencing is used to provide an enclosure for utility equipment, ensure a minimum clearance is provided no less than 3 feet (900 mm) around the equipment to permit maintenance access and ventilation. Provide stone, gravel, or concrete paving within the enclosure.

G204002 RETAINING WALLS AND FREESTANDING WALLS

Provide retaining walls to permanently resist soil pressures as well as live loads. Provide wall drainage to minimize lateral loading and protect wall materials against degradation.

G204003 EXTERIOR FURNISHINGS

Refer to ESR G20 and other portions of the RFP for exterior furnishings required on this project. All site furnishings shall be permanently attached to concrete pads. Site furnishings shall conform to the Base Exterior Architecture Plan (BEAP) and or Installation Appearance Plan for each Activity. If no product guidance is given, coordinate material, finish and color with architecture (fiberglass and aluminum are not acceptable) and provide to the greatest extent possible, materials with industrial recycled content, preferably from regionally local manufacturers.

G204003 1.1 PICNIC AND PASSIVE RECREATION AREAS

Picnic areas shall include tables, with attached benches, on concrete bases sloped to drain and permanent barbecue grill(s). Additionally, separate receptacles shall be provided for trash, recycling, and barbecue ashes. All site furnishings shall be permanently attached to concrete paving which shall extend a minimum of 12 inches (300 mm) past the furnishing, with the exception of picnic tables and benches, which shall extend 2 feet minimum on all sides. The elevation of the finished concrete shall be plus 1 inch (25 mm) above adjacent grade.

G204003 1.2 TRASH RECEPTACLES

Trash receptacles, with drain hole, shall have stationary or self-closing lids with anchor chains secured to the receptacle to protect the contents from weather. Receptacles shall be designed to hold heavy-duty plastic or galvanized steel liners of the same manufacturer. Consideration shall be given to potential weight of full containers when deciding on 'top loading' or 'side loading' receptacles. Trash receptacles shall include a concrete pad 12 inches (300 mm) larger on all sides than the size of the trash receptacles.

G204003 1.3 BENCH

Minimum 6 feet (1.8 meter) length to match trash and recycling receptacle material & color, installed a minimum of 18 inches (450 mm) above finish grade, permanently installed with anchor bolts or in-ground.

G204003 1.4 RECYCLING RECEPTACLES

Provide single-piece with separate slots for cans, bottles, and newspaper. Height, material, and style shall match trash receptacle.

G204003 1.5 BARBEQUE

Provide minimum 12 inches x 18 inches with heavy-duty grill and hinged stainless steel lid, factory-primed and painted with rust-resistant paint. Install so coal height is a minimum of 36 inches (0.91 meter) above finish grade.

G204003 1.6 HOT ASH RECEPTACLE

Minimum 28 square inches (181 square centimeters) x 42 inches (1.1 meter) high pre-cast reinforced concrete with drain hole with steel ash grate and cast in "Hot Coals Only" logos on each side with white letters on a red background.

G204004 SECURITY STRUCTURES

Where identified for project elsewhere in this RFP, provide active and passive vehicle barriers to effectively stop or detect penetration by explosive-laden vehicles through the perimeter of a protected area in accordance with MIL-HDBK-1013/14, *Selection and Application of Vehicle Barriers*.

G204005 SIGNAGE

Provide facility signage as required by local code, the Installation and Appearance Guide, the Base Exterior Architectural Plan (BEAP) and this RFP.

Size messages and graphics on signs according to the functional viewing distance. Typically, at least 1 inch (25 mm) of letter height per 25 feet (7.62 meters) of viewing distance is required for readability.

Refer to Section G201004, "Marking & Signage" for traffic signage.

G204007 PLAYING FIELDS

G204007 1.1 PLAYGROUNDS

Design playgrounds and provide surfacing and equipment in accordance with this RFP and U.S. Consumer Products Safety Commission Publication 325 and ASTM F 1487. Tot-Lots and Play-Lots shall be bordered with reinforced concrete curbing to a depth appropriate to the type safety surfacing utilized. Provisions for shade and wind protection shall be made where these elements may significantly limit the use of the facilities. Tot-lots and play-lots shall have separated areas with appropriately sized equipment and materials to serve their developmental levels. The areas shall be separated by a buffer zone, which can be an area of shrubs, hardscape, or benches. Tot-lots and play-lots shall have signage to give guidance to adults as to the age appropriateness of the equipment.

G204007 1.1.1 Tot Lots

Design each "tot lot" to accommodate children from ages 2 through 5 to provide a variety of play activities and motor skill development opportunities which may include, as a minimum:

Multi-activity structures shall have a minimum of two platforms and two slides, one wheel chair accessible, swing set for young children, paired spring mounted 'riders' or other similar types of apparatus. At least two benches, with backs, on concrete bases, shall be located for convenience to, and observation of, the tot-lot.

G204007 1.1.2 Play Lots

Design each "play lot" to accommodate children from ages 5 to 12 which provide a wider range of activities and opportunities for greater motor skills development and improvement. These may include, as a minimum:

Multi-activity structure shall have a minimum of three platforms and two slides, one wheel chair accessible. A swing set, or other similar types of apparatus. At least two benches, with backs, on concrete bases, shall be located for convenience to, and observation of, the play-lot.

G204007 1.1.3 Equipment

Tot lot and play lot equipment shall be factory finished institutional quality, in compliance with ASTM F1487, the United States Consumer Products Safety Commission's *Guidelines for Public Playgrounds*, UFC 3-210-04, *Design: Children's Outdoor Play Areas*, and the UFC 3-200-10N, *Civil Engineering*. Use only equipment that has been approved by IPEMA and installed by a NPCA contractor.

Tot lot and play lot equipment shall be sited to provide use and no encroachment zones in accordance with ASTM F1487. A use zone is a clear, unobstructed area under and around play equipment where a child would be expected to land when jumping or falling from a piece of play equipment. Requirements for use zones vary for the age group and for different pieces of equipment. All use zones for play equipment shall be shown on the site plan to ensure there is no conflict between play activities on the ground and swinging or jumping from the equipment. The No-encroachment zone is an additional area beyond the use zone where children using the equipment can be expected to move about and should have no encroaching obstacles. This area will vary according to the types of adjacent equipment, and their orientation to one another.

G204007 1.1.4 CCA-Treated Lumber

CCA-treated lumber shall not be used in recreational facilities for children.

G204007 1.1.5 Playground Safety Surface

A playground safety surface, in accordance with ASTM F355 and ASTM F1292, shall be provided throughout all use zones and under all play equipment in tot lots and play lots. Natural wood products are not allowed for surfacing. Loose fill surfacing shall be a minimum of 4 inches (100 mm) below the top of edging. Local climate, soil conditions, location, and size of area, type of activity, age of users, and intensity of use shall be considered when choosing surfacing material. Provide soil separator fabric between playground loose-fill material and subgrade soil. Provide 4 inch perforated pipe around perimeter of playground and slope to drain. Drain to sump a minimum of 20 feet out from the playground curbing or to storm drain.

G204007 1.2 PLAYING FIELDS

Provide playing surfaces in accordance with this RFP.

G204090 OTHER SITE IMPROVEMENTS

Other site improvements shall conform to the BEAP or Installation Appearance Plan (whichever is applicable) and to the requirements of UFC 4-010-01.

G204090 1.1 DUMPSTER PADS AND ENCLOSURES

G2050 LANDSCAPING

G2050 1.1 DESIGN

The design of landscaped areas shall be in accordance with Presidential Executive Order 13148 of April 2000, with a goal to reduce fertilizers, pesticides, and water use. The intent is to achieve a base-wide ratio of 20 percent maximum non-native plants and 80 percent minimum locally or regionally native plants. Do not use plants deemed invasive by the project state or region's Exotic Pest Plant Council, State Department of Agriculture or local chapter of the American Society of Landscape Architects as a threat to ecosystems or agriculture. All non-paved site areas inside the project limits or outside the project limits disturbed by construction operations, after meeting plant quantity requirements, shall be covered with plant material or inorganic mulch. Stabilized soil or organic mulch is not acceptable as a ground cover. For NAVFAC Southwest projects, eliminate or minimize the use of turf, except when needed for active or passive recreation. Provide landscape architectural work in accordance with UFC 3-201-02, *Landscape Architecture*. All projects with planting and or irrigation areas shall utilize the design services of a Landscape Architect licensed in the state of the project. The Landscape Architect of Record shall visit the site at least once prior to design, twice during construction, and quarterly during the Establishment Period, including the Establishment Period start and completion.

G205001 FINE GRADING AND SOIL PREPARATION

See Section G10, Site Preparation.

G205002 EROSION CONTROL MEASURES

See Section G10, Site Preparation.

G205003 TOP SOIL AND PLANTING BEDS

See paragraph titled, G205005 PLANTINGS.

G205004 SEEDING, SPRIGGING, AND SODDING

Areas that are to be seeded that are larger than 1,000 square feet (92.90 square meters) shall be hydroseeded. Hydroseed mix composition shall be appropriate for surrounding land use and compatible and consistent with local application rates, seed availability and established practice in the project area. If project dates are unknown, specify required planting dates or alternative species for different seasons. Apply seed at a time best suited for germination of the selected species. Seeded areas shall achieve 95-percent coverage of the selected species and be weed free at the end of the Establishment Period.

G205005 PLANTINGS

G205005 1.1 EXISTING PLANT MATERIAL TO REMAIN OR BE TRANSPLANTED

Preserve existing trees to the greatest extent possible. The Contractor shall tag trees to be saved with plastic or vinyl tape tied to the tree caliper. The Contractor shall protect existing trees by fencing planting areas to remain from compaction and any other damage with a barrier of metal poles a maximum 8 feet (2.4 meter) on center with plastic netting to a minimum of 10 feet (3.0 meter) radius from outside of the tree's trunk. Where tree drip lines are greater than 10 feet (3.0 meter) from the tree's trunk, locate barrier fencing at the drip line of the tree. The Contractor shall not allow debris from tree or stump removal operations to fall on or otherwise damage plants that are not scheduled for removal. Plastic tape and barrier fencing shall not be removed until planting operations are ready to begin and or instructed by the Contracting Officer. Existing trees to remain or to be transplanted that are unhealthy, that die, or have 20 percent or more of their crowns that die during the establishment period shall be replaced with healthy plants of the same species or variety during the appropriate planting season. During the landscape establishment period, trees, turf, shrubs, and ground cover that are damaged or destroyed during construction operations shall be replaced by the Contractor at no additional cost to the Government. The Contractor, at the direction of the Contracting Officer, shall remove the existing tree and stump and replace it with trees of the same genus and species equal to the total caliper of the existing tree. Minimum caliper of replacement trees shall be 4 inch (100 mm). Replace shrubs with 5 gallon (18.9 liter) size container, ground cover with flat containers planted at 8 inches (200 mm) on center, and turf with sod, all of the same genus and species.

G205005 1.2 UTILITIES

Trees shall not be placed within 10 feet (3 meter) of any above or below-grade utility line or structure. Within roadway sightlines, mature shrubs shall not be greater than 3 feet (1 m) in height and trees shall be limbed up a minimum of 6 feet (2 m) so their mature growth will not obstruct views from vehicle intersections or points of vehicle ingress or egress.

G205005 1.3 RECYCLING

Green waste: Contact the Public Works Department for potential green waste collection and hauling by the Government. Green waste not collected by the Government shall be separated from construction debris and delivered to the base's or local landfill's green waste recycling area. Quantify and report diverted waste to the Contracting Officer.

G205005 1.4 PLANTING

G205005 1.4.1 Plant Quantities

Provide tree plantings at a minimum of one (1) tree per 1000 square feet (92.9 square meters) of landscape area. Landscape area is defined as all permeable areas within the project boundaries not covered by buildings, roads, parking lots, sidewalks, and other non-permeable areas. Total minimum quantities may be reduced only by the reviewing government landscape architect. For bioretention areas, quantities of trees, shrubs, and ground covers shall be as required by State regulations. Provide a minimum tree size of 24 inch (600 mm) box/2 inch (50 mm) caliper, or if within an anti-terrorism zone provide a minimum size of 36 inch (910 mm) box/3 inch (76 mm) caliper. For trees within concrete or other non-permeable paved areas, allow a minimum non-paved planting area of 4 feet by 8 feet (1.2 m by 2.4 m) per tree.

For NAVFAC Southwest only: A minimum of forty percent (40%) of the landscaped areas shall be planted with shrubs and groundcover so that at 50 percent (50%) plant maturity, they will form mass plantings. Utilize a minimum ratio of 60 percent (60%) 5 gallon (18.9 liter) shrubs or groundcover and 40 percent (40%) 1 gallon (3.79 liter) shrubs or groundcover. The remaining sixty percent (60%) of the landscape area may be inorganic mulch, decomposed granite, planted or a combination. For inorganic mulch, provide 3 inch (76 mm) depth of 3/4-inch (19 mm) and smaller rock, and for larger than 3/4-inch (19 mm) size, assure complete ground surface coverage. For decomposed granite, provide 2 inch (50 mm) minimum depth. Do not use decomposed granite as a ground cover on slopes 5:1 and greater.

For all other NAVFAC Regions: Plant the majority of shrubs at major entrances to buildings and at other important planting zones that are specific to each site. The overall design intent should be to plant mostly trees and turf, with shrubs and ground covers used sparingly, to reduce maintenance costs while still providing for functional planting requirements (e.g., soil stabilization, energy conservation, force protection, and aesthetics). Provide a minimum size 3 gallon (11.4 liter) container for shrubs and 1 gallon (3.79 liter) container for ground covers.

G205005 1.4.2 Plant Quality

All plants shall comply with ANSI Z60.1 and ANSI Z133.1, current editions. All plants shall be in a healthy, disease and pest free condition. All of the seed, sod, and sprigs shall be State-Certified.

G205005 1.4.3 Plant Selection

The reviewing Government Landscape Architect shall have final approval authority on all selected plant material. Species deemed unsuitable for planting by the Government Landscape Architect will not be allowed.

G205005 1.4.4 Plant Installation

Planting operations, including but not limited to planting soil mixes and fertilization, shall comply with local established practices and agricultural extension service recommendations. Stake or guy new or transplanted trees with three stakes [2 – 2 Â½ inch(63.5 mm) x 8 feet (2.4 m) hardwood], or three guy cables [five-strand, 3/16 inch (5 mm) diameter galvanized steel cable].

G205005 1.4.5 Edging Materials and Mulching Materials

Provide 3/16 inch (5 mm) thick by 4 inch (100 mm) deep galvanized steel or 6 inch (150 mm) by 6 inch (150 mm) concrete edging dividing all turf and shrub areas and dividing all planted and non-planted inorganic mulch areas. Plastic edging is not allowed. Mulch planted areas not mulched with inorganic mulch or stabilized decomposed granite with a 3-inch (75 mm) depth of organic shredded hardwood mulch during the Establishment Period while plants are growing to form a mass.

G205005 1.4.6 Fertilizer

Fertilize all transplanted trees, new trees, shrubs, ground covers, turf, perennials, and ornamental grasses as recommended by local agricultural extension services.

G205005 1.4.7 Weed Fabric and Erosion Control Fabric

Provide a weed barrier fabric of sheet polypropylene or polyester fabric specifically designed for weed control purposes beneath all planted or mulched non-planted areas. Fabric shall be treated for protection against deterioration due to ultraviolet radiation. Fabric shall be a minimum 99 percent opaque to prevent photosynthesis and seed germination from occurring, yet allowing air, water, and nutrients to pass through to the roots. Minimum weight shall be 5 ounces per square yard (0.11 kg per square meter) with a minimum thickness of 20 mils (0.50 mm) with a 20 year minimum guarantee. Provide a biodegradable product designed specifically for erosion control on all sloped areas 3:1 and greater in slope.

G205005 1.4.8 Drainage

Provide for proper grading and drainage of turf and planting areas. Provide sub-surface drainage where soil or other conditions do not allow surface drainage. Do not drain roof gutters into planter areas.

G205007 IRRIGATION SYSTEMS

G205007 1.1 IRRIGATION

Where irrigation system is required per other parts of this RFP, provide a permanent, below-grade system. Provide 100 percent sprinkler head to head coverage. Provide pop-up heads in turf and landscape zones when adjacent to walks, roads, parking lots, or in sparsely planted landscape areas where pedestrians may circulate. Provide pop-up heads project-wide on high-traffic sites such as, but not limited to, dining, housing, entertainment, daycare, education, and recreation facilities. Verify adequate water pressure for irrigation purposes and provide booster pumps and or pressure regulation as required. Provide minimum 12 inch (300 mm) cover over PVC irrigation pipe. 1/2-inch pipe is not allowed. The Landscape Contractor shall test the entire system in the presence of the Contracting Officer and Landscape Architect-of-Record to ensure proper performance. All irrigation components shall be commercial or institutional quality. Provide rain shut-off device and watertight splices. Sprinkler heads, bodies, and nozzles shall be of the same manufacturer.

G205007 1.2 OPERATION AND CONTROL

Assure systems will automatically operate on an "irrigation window" between 2130-0530. Provide compatible and fully functional control if a central control system exists on base. Otherwise, provide evapotranspiration-measuring control with flow meter and master valve with controller capable of indicating visible or auditory notification, such as a blinking light or beeping sound, of system shut-off.

G205007 1.3 ZONING

Provide separate control valves for differing solar exposures, for areas with differing irrigation head types or differing precipitation rates, and top and bottom of slopes. Provide a separate irrigation backflow prevention device and water meter. Turf and shrubs/groundcover are not allowed on the same valve. Provide separate concrete valve box with cast iron lid and valve ID for each valve and wire splice. Provide quick coupling valves at 100 feet (30 m) on center. Provide in-head check valves for sloped areas with 0.5 feet (150 mm) or more in elevation change.

G205007 1.4 TEMPORARY IRRIGATION

Provide ultra-violet resistant pipe and fittings for above-grade, temporary irrigation. Only non-pressure pipe is allowed above grade. Irrigation systems intended to remain in place longer than one year shall be installed below grade.

G205007 1.5 NON-POTABLE IRRIGATION

Provide lavender-colored pipe, sprinkler head and quick coupler caps, valve tags, signage, and associated filtration equipment.

G205007 1.5.1 Controller Charts

Provide one chart for each new controller or existing re-sequenced controller. The chart shall be an actual plan reduced to fit inside maximum dimensions of the controller housing. Use black line print for chart and a different color to indicate each station area of coverage. After chart is completed and approved for final acceptance, seal chart between two 20 mil (0.5 mm) pieces of clear plastic. The chart shall be affixed to the inside of the controller cabinet door using approved mastic or fastening system.

-- End of Section --

THIS PAGE HAS BEEN INTENTIONALLY LEFT BLANK

SECTION G30

SITE CIVIL/MECHANICAL UTILITIES
4/08

G30 GENERAL

G30 1.1 DESIGN GUIDANCE

Provide the design and installation in accordance with the following references. This Performance Technical Specification (PTS) adds clarification to the fundamental requirements contained in the following Government Standards. The general requirements of this PTS section are located in PTS Section Z10, *General Performance Technical Specification*.

G30 1.1.1 Industry Standards and Codes

AMERICAN SOCIETY OF MECHANICAL ENGINEERS (ASME)

G30 1.1.2 Government Standards

UNIFIED FACILITY CRITERIA (UFC)

UFC 1-300-09N, *Design Procedures*

UFC 3-200-10N, *Civil Engineering*

UFC 3-400-10N, *Mechanical Engineering*

UFC 3-800-10N, *Environmental Engineering for Facility Construction*

G30 1.2 QUALITY ASSURANCE

Materials and assemblies installed in the work shall be inspected and found to be in compliance with industry standards and these specifications prior to acceptance of the work. Items found not to be in compliance shall be removed or corrective measures taken, to assure compliance with the referenced standard. The Contractor shall perform field tests and provide labor, equipment, and incidentals required for testing.

G30 1.2.1 Materials

All materials shall be new, and shall bear the label of standardizing agency whenever standards have been established and label service is normally and regularly furnished by the agency. All equipment provided shall be listed and labeled suitable for the specified purpose, environment, and application and installed in accordance with manufacturer’s recommendations.

G30 1.2.2 Additional Work

Provide such other labor and materials as are required for a complete and usable system in accordance with the requirements of the criteria listed, regardless of whether such materials and associated labor are called for elsewhere in this RFP.

G30 1.2.3 Qualifications of Well Drillers for Water Supply Wells

If required by the state waterworks' regulations, the well driller shall be certified by the state and shall remain certified while constructing the well.

G30 1.2.4 Qualifications of Coating Contractors for Water Storage Tanks

All contractors and subcontractors that perform surface preparation or coating application shall be certified by the Society for Protective Coatings (formerly Steel Structures Painting Council)(SSPC) to the requirements of SSPC QP 1 prior to contract award, and shall remain certified while accomplishing any surface preparation or coating application.

G30 1.2.5 Qualifications of Oil/Water Separator Manufacturers

Manufacturers shall have produced packaged oil/water separate units of similar size required for over five years.

G30 1.3 PERFORMANCE VERIFICATION AND ACCEPTANCE TESTING

Compliance with the requirements will be determined by a review of the design and construction submittals and by field inspection. See Section 01 33 10.05 20, *Design Submittal Procedures*, and Section 01 33 00.05 20, *Construction Submittal Procedures*, for additional requirements.

Verification of satisfactory utility system performance shall be via Performance Verification Testing, as detailed in this section of the RFP. Verification of satisfactory performance shall also be via testing as detailed in the paragraph, "Field Quality Control", in applicable UFGS Specification Sections utilized.

G30 1.3.2 Water Distribution System Verification Testing

Provide testing on water mains and service lines in accordance with the state waterworks' regulations and the following:

a. Ductile Iron and other materials: AWWA C600.
b. PVC: AWWA C605.

Do not begin testing on any section of a pipeline where concrete thrust blocks have been provided until at least 5 days after placing of the concrete.

G30 1.3.4 Sanitary Sewer Distribution System Verification Testing

Provide testing on sewer mains and laterals in accordance with the state sewerage regulations.

G30 1.3.4.1 Visual Test

Check each straight run of pipeline for gross deficiencies by holding a light in a manhole; it shall show a practically full circle of light through the pipeline when viewed from the adjoining end of line.

G30 1.3.4.2 Leakage Tests

G30 1.3.5 Sanitary Sewer Manholes Verification Testing

Provide testing on sanitary sewer manholes in accordance with the state sewerage regulations. At minimum, perform hydraulic testing in accordance with ASTM C 969M (ASTM C 969).

G30 1.3.6 Wastewater Pump Station Verification Testing

Test the wastewater pump station in accordance with the state sewerage regulations. Conduct testing on discharge piping and force main in accordance with tests for water distribution mains; see G30, paragraph 1.3.2. Test pumps, controls, and alarms, in operation, under design conditions to ensure proper operation of all equipment.

G30 1.3.7 Storm Sewer System Verification Testing

G30 1.3.7.1 Visual Test

Check each straight run of pipeline for deficiencies by holding a light in a manhole; it shall show a full circle of light through the pipeline when viewed from the adjoining end of line.

G30 1.3.7.2 Leakage Tests for Storm Sewer under Pavements

Test lines for leakage by either infiltration tests or exfiltration tests, or by low-pressure air tests in accordance with the following:

a. Exfiltration Tests:

ASTM C 969M (ASTM C 969) and perform calculations in accordance with its Appendix.

b. Low-pressure Air Tests:

1) Pipelines: ASTM C 924M (ASTM C 924) and perform calculations in accordance with its Appendix.

2) PVC plastic pipelines: UBPPA UNI-B-6 and perform calculations in accordance with its Appendix.

G30 1.4 DESIGN SUBMITTALS

Design Submittals shall be in accordance with UFGS section 01 33 10.05 20, *Design Submittal Procedures*, UFC 1-300-09N, *Design Procedures*, UFC 3-200-10N, *Civil Engineering*, and UFC 3-400-10N, *Mechanical Engineering*.

G30 1.5 CONSTRUCTION SUBMITTALS

Submit construction submittals in accordance with PTS Section Z10, *General Performance Technical Specifications*. In addition to the Z10 requirements, the Designer of Record (DOR) shall approve the following construction submittals as a minimum:

All test reports.

G30 1.6 COORDINATION

To the extent that site work is indicated on the RFP drawings, the Contractor shall verify that the locations and inverts of all site utility lines are coordinated with building utility lines. If necessary, the Contractor shall make adjustments to the locations and inverts indicated on the RFP drawings in accordance with applicable codes and standards.

G30 1.7 ANTITERRORISM (AT) STANDARDS

Incorporate the minimum AT standards indicated in UFC 4-010-01, *DoD Minimum Antiterrorism Standards for Buildings*.

G30 1.8 BACKFLOW PREVENTION

The Contractor shall submit backflow prevention training certificates and backflow preventer devices certification in accordance with Section 01 50 00.05 20 (01501N), *Temporary Facilities and Controls for Design-Build*.

G30 1.10 NACE CERTIFIED CATHODIC PROTECTION SPECIALIST QUALIFICATIONS

Submit prior to site welding. Certifications shall not be more than one year old. Submit documentation of NACE certification.

G30 1.11 EXCAVATION, BACKFILLING AND COMPACTION OF UTILITIES

Refer to Section G10, *Site Preparation*.

G30 1.12 DELIVERY, STORAGE AND HANDLING OF MATERIALS

Inspect materials delivered to site for damage. Unload and store with minimum handling. Store the materials on-site in enclosures or under protective covering. Store the plastic piping, jointing materials, and rubber gaskets under cover, out of direct sunlight. Do not store materials directly on the ground. Keep inside of pipes, fittings, valves, and hydrants free of dirt and debris. Handle in a manner to ensure delivery to the trench in sound undamaged condition. Take special care to avoid injury to coatings and linings on pipe and fittings; make satisfactory repairs if coatings or linings are damaged. Carry, do not drag pipe to the trench.

G3010 WATER SUPPLY

G3010 1.1 WATER SYSTEM DESIGN

The Contractor shall determine domestic and fire demands for the facility and shall verify the design of all components of the domestic and fire protection supply systems. The water system design and construction shall be in accordance with UFC 3-200-10N, *Civil Engineering*, the state waterworks' regulations, and the utility provider's requirements. Design the water supply systems to provide required flows and maintain residual pressures based upon peak demands.

If the new water system is an extension of an existing water system, the Contractor shall obtain all necessary static pressure, residual pressure, and flow characteristics of the existing distribution system by actual field tests. The Contractor shall conduct flow and pressure tests and provide design calculations that show the existing lines are capable of handling the additional flows. The new water system shall connect to the nearest existing fitting or water line.

The Contractor shall design the connections to the water system including the necessary meter assemblies and backflow-preventing devices in accordance with the requirements of the Activity or utility provider and the state waterworks regulations.

Wherever possible, valve boxes and all other utility access structures shall be located out of paved areas.

G301002 POTABLE WATER DISTRIBUTION

G301002 1.1 WATER SYSTEM DESIGN

Provide all materials, equipment, labor, testing, and miscellaneous related items for water distribution mains and service lines to the facility and connections to the existing water system in accordance with UFC 3-200-10N, *Civil Engineering*; the utility provider's requirements; and the state waterworks' regulations; whichever is more stringent.

Available flow at the residual pressure at each point of connection shall be determined by conducting flow tests in accordance with AWWA M17 and NFPA 291.

Water main piping, service lines, fittings, valves, accessories, and all other materials shall meet the American Water Works Association (AWWA) standards for a minimum system working pressure of 150 psi (1050 kPa).

G301002 1.2 WATER DISTRIBUTION MAINS

For underground applications, water mains 12 inches (300 mm) in diameter and less shall be ductile iron or PVC. Water mains deeper than 10 feet (3.0 m) or larger than 12 inches (300 mm) in diameter shall be ductile iron.

For aboveground applications, water mains shall be flanged ductile iron pipe.

G301002 1.2.1 Materials

a. Ductile Iron Pressure Pipe

1) Pipe: AWWA C151, Pressure Class 350.

2) Fittings: AWWA C110 or AWWA C153.

3) Interior Lining: AWWA C104.

4) Exterior Protection (if required): AWWA C105, polyethylene encasement.

b. PVC Pressure Pipe

1) Pipe: AWWA C900, Pressure Class 150.

2) Fittings: Ductile Iron (AWWA C110 or AWWA C153).

c. Flanged Ductile Iron Pipe

1) Pipe: AWWA C115 and its appendices.

2) Fittings: AWWA C110 or AWWA C153.

3) Lining: AWWA C104.

G301002 1.2.2 Installation

a. Ductile Iron: AWWA C600.
b. PVC: AWWA C605.

Provide a continuous length of tracer wire for the full length of each run of nonmetallic pipe.

G301002 1.2.3 Connections to Existing Water Lines

Make connections to existing water lines after approval from the system owner is obtained and with a minimum interruption of service on the existing line. Make connections to existing lines under pressure in accordance with the recommended procedures of the manufacturer of the pipe being tapped.

G301002 1.3 WATER SERVICE LINES

Water service lines less than 4 inches (100 mm) in diameter shall be copper tubing. Water service lines 4 inches (100 mm) and 6 inches (150 mm) in diameter shall be ductile iron pipe and PVC pressure pipe; see G301002, paragraph 1.2, "Water Distribution Mains" for additional requirements for ductile iron and PVC piping.

G301002 1.3.1 Materials

a. Copper Tubing

1) Pipe: ASTM B 88M (ASTM B 88), Type K.

2) Fittings for Solder-Type Joint: ANSI B16.8 or ASME B16.22.

3) Fittings for Compression-Type Joint: ASME B16.26, flared tube type.

b. PVC Pressure Pipe

1) Pipe: ASTM D1785, Schedule-40, or ASTM D 2241, with SDR rating for 160 psi (1.1 MPa) pressure rating.

2) Fittings: ASTM D 2466.

3) Joints: Elastomeric gaskets for pressure rating; solvent cement joints, ASTM D 2564.

G301002 1.3.2 Service Connections

Connect service lines 2-inch (50 mm) diameter or less to the main by a corporation stop and install a gate valve on service line below the frostline.

a. Ductile-iron water mains: AWWA C600.
b. PVC water mains: UBPPA UNI-B-8 and the recommendations of AWWA M23, Chapter 9, "Service Connections."

G301002 1.3.3 Installation

Install pipe, fittings, and accessories in accordance with manufacturer's instructions.

a. Metallic Piping: applicable requirements of AWWA C600.

b. PVC: applicable requirements of ASTM D 2774 and ASTM D 2855.

G301002 1.4 CORROSION PROTECTION

G301002 1.4.1 Insulating Joints

Provide insulating joints to prevent contact between dissimilar metals at the joint between adjacent sections of piping in accordance with the pipe manufacturer's recommendations. Ensure that there is no metal-to-metal contact between dissimilar metals after the joint has been assembled.

To prevent the possibility of bi-metallic corrosion, service lines of dissimilar metal to the water mains and the attendant corporation stops shall be wrapped with polyethylene or suitable dielectric tape for a minimum clear distance of 3 feet (900 mm) from the main.

G301002 1.5 VALVES

Valves shall be the same diameter and have the same joint ends as the mains to which they are installed. Each type of valve shall be of one manufacturer.

G301002 1.5.1 Gate Valves

G301002 1.5.1.1 Location

Valves shall be installed at all new points of connection. At a minimum, valves shall be located to ensure that no more than two fire hydrants will be out of service in the event of a single break in a water main. Valves shall be located outside of pavement and heavy traffic areas whenever possible.

G301002 1.5.1.2 Gate Valves 3-inch (75 mm) and Larger in Diameter

a. Valves (20-inch and smaller in diameter): AWWA C509 or AWWA C515, nonrising stem and of one manufacturer.
b. Valves (greater than 20-inch in diameter): AWWA C500.
c. Valves for Indicator Post: AWWA C500 with indicator post flange in accordance with applicable requirements of UL 262.
d. Interior Coating: AWWA C550.

G301002 1.5.1.3 Gate Valves Smaller than 3-inch (75 mm) in Diameter

MSS SP-80, Class 150, solid wedge: Valves shall have flanged or threaded end connections, with unions on both sides of the valve and a handwheel operator.

G301002 1.5.1.4 Valve Box

Provide a cast iron, adjustable, valve box for each gate valve on buried piping. Valve boxes shall be of a size suitable for the valve on which it is to be used with a minimum diameter of 5-1/4 inches (130 mm). Provide a round head and cast the word "WATER" on the lid.

G301002 1.5.2 Check Valves

Valves sized 2-inches (50 mm) to 24-inches (600 mm) shall be swing-check type (AWWA C508) and have a protective epoxy interior coating conforming to AWWA C550. For underground applications, provide check valve in a valve vault.

G301002 1.5.3 Air Release, Air/Vacuum, and Combination Air Valves

Refer to AWWA C512 and AWWA M51.

G301002 1.5.4 Corporation Stops

If service lines 2—inch diameter or less are tapping water mains, provide corporation stops. The corporation stops shall be ground key type, bronze, ASTM B61 or ASTM B62.

G301002 1.5.5 Installation of Valves

Make and assemble joints to valves as specified for making and assembling the same type of joints between pipe and fittings.

G301002 1.6 WATER METERS

Provide water meter and remote reading as required by the utility provider and in accordance with AWWA standards.

G301002 1.7 BACKFLOW PREVENTION

Provide backflow prevention and cross connection control in accordance with AWWA M-14 and governing local/state plumbing codes and waterworks' regulations.

G301002 1.8 FIRE HYDRANTS

Fire hydrants shall all be of one manufacturer and in accordance with UFC 3-600-10N, *Fire protection Engineering*. Provide protection for fire hydrants located in areas subject to vehicle damage. Fire hydrants shall have National Standard threads on hose and pumper connections. Provide a 6 inch (150 mm) inlet, two 2.5 inch (62 mm) hose connections and one pumper connection sized to accommodate local fire department equipment requirements. Stencil hydrant number and main size on the hydrant barrel using black stencil paint.

a. Dry Barrel Fire Hydrants: AWWA C502 with frangible sections.
b. Installation: Install hydrants with the pumper connection facing the adjacent paved surface. If there are two, paved adjacent surfaces, contact the Contracting Officer for further direction.

G301002 1.9 THRUST RESTRAINT

Provide thrust restraint for all piping, valves, fittings, and other appurtenances of the water distribution system.

a. Concrete Thrust Blocks: AWWA C600.
b. Restrained Joints: Pipe manufacturer's recommendations and required length of pipe to be restrained calculated in accordance with UFC 3-200-10N, *Civil Engineering*.

G301002 1.10 DISINFECTION

Disinfect new water piping and existing water piping affected by Contractor's operations in accordance with the state waterworks' regulations and AWWA C651.

G301004 FIRE PROTECTION WATER DISTRIBUTION

G301004 1.1 GENERAL REQUIREMENTS

Refer to applicable portions of Section G301002 and Section D40, *Fire Protection Systems*. Water main piping, service lines, fittings, valves, accessories, and all other materials shall meet the American Water Works Association (AWWA) standards for a minimum system working pressure of 200 psi (1380 kPa).

G301004 1.2 DETECTOR CHECKS

UL 312; detector check shall include bypass meter, piping, gate valves, check valve and connections to detector check valve. Set valve to allow minimal water flow through bypass meter when major water flow is required.

G301004 1.3 FIRE DEPARTMENT CONNECTIONS

Refer to UL 405.

G301004 1.4 INDICATOR POSTS

Refer to UL 789.

G3020 SANITARY SEWER

G3020 1.1 GENERAL REQUIREMENTS

The gravity sanitary sewage collection system shall be designed and constructed in accordance with UFC 3-200-10N, *Civil Engineering*, and the state sewer collection and treatment regulations. The new sanitary sewage collection system shall connect to the nearest existing sanitary manholes and/or sanitary lines adjacent to the project site. The Contractor shall provide design calculations that show the existing system is capable of handling the additional flows.

In areas where chemicals and other substances may be stored (including mechanical and electrical rooms), it is recommended that the floor drains be eliminated or provisions made to prevent spills from entering the sanitary sewer system. If there is process flow from equipment, discharge can be hard piped, with air gap, to the sanitary sewer.

Wherever possible, manholes and all other utility access structures shall be located out of paved areas.

G302001 SANITARY SEWER PIPING

G302001 1.1 GENERAL REQUIREMENTS

Provide all materials, equipment, labor, testing, and miscellaneous related items to provide sanitary sewage lines necessary for distribution and services to the buildings.

G302001 1.2 GRAVITY SEWER PIPING

Gravity sewer mains and laterals shall be PVC sewer pipe and fittings, except under roadways or at depths greater than 10 feet (3.0 m) where ductile iron pipe shall be provided.

G302001 1.2.1 Materials

a. PVC Gravity Sewer Pipe

1) Piping and Fittings: ASTM D 3034, SDR 35.

2) Joints: ASTM D 3212 and ASTM F 477.

b. Ductile Iron Gravity Sewer Pipe

1) Piping: ASTM A-746. Provide required Thickness Class based on design information and methods in ASTM A-746.

2) Fittings: AWWA C110 or AWWA C153.

3) Joints: AWWA C111.

4) Interior Coating: AWWA C104.

5) Exterior Protection (if required): AWWA C105, polyethylene encasement.

G302001 1.2.2 Connections to Existing Lines

Obtain approval from the Contracting Officer before making a connection to an existing line. Conduct work so that there is minimum interruption of service on existing line and provide a new manhole at the connection point.

G302001 1.2.3 Installation

Install pipe, fittings, and accessories in accordance with manufacturer's instructions.

a. PVC: ASTM D 2321. Do not use ASTM D 2321 Class IV or V materials for bedding, haunching or initial backfill materials.
b. Ductile Iron: AWWA C600.

G302001 1.3 PIPING FOR CLEANOUTS

G302001 1.3.1 Materials

a. Cast-Iron Soil Pipe for Cleanouts

1) Pipe: ASTM A-74, service.

2) Joints: ASTM C 564 compression-type rubber gaskets.

3) Exterior Protection (if required): AWWA C105, polyethylene encasement.

G302001 1.3.2 Installation

Install cast iron pipe and fittings in accordance with the recommendations of the pipe manufacturer.

G302002 SANITARY SEWER MANHOLES & CLEANOUTS

G302002 1.1 GENERAL REQUIREMENTS

Provide all materials, equipment, labor, testing, and miscellaneous related items for the sanitary manholes in accordance with the following:

a. Manhole rim elevations shall be set flush with finished surface of paved areas or 1 inch (25 mm) above finished grade in unpaved areas.
b. Resilient connectors for making joints between manhole and pipes entering manhole shall conform to ASTM C 923M (ASTM C 923).
c. Provide drop manholes when a gravity sewer pipe enters a manhole at an elevation of 24 inches (610 mm) or more above the manhole invert.

G302002 1.2 PRECAST CONCRETE MANHOLES

ASTM C 478M (ASTM C 478); base and first riser shall be monolithic.

Precast manhole sections shall have:

a. ASTM C 990M (ASTM C 990) butyl gaskets;
b. ASTM C 443M (ASTM C 443) rubber O-ring joints; or
c. AASHTO M 198, Type B preformed plastic gaskets.

G302002 1.3 CAST-IN-PLACE CONCRETE MANHOLES

Provide reinforced concrete; designed according to ASTM C 890 for A-16 (AASHTO HS20-44), heavy-traffic, structural loading. Concrete work shall be in accordance with ACI 301M (ACI 301) and ACI 350-01; provide a minimum compressive strength of 4000 psi (28 MPa).

G302002 1.4 MANHOLE FRAMES AND COVERS

FS A-A-60005; cast iron or ductile iron; designed to accommodate the traffic loadings. The word "Sewer" and “Confined Space Permit Required” shall be stamped or cast into covers so that it is plainly visible.

G302002 1.5 MANHOLE STEPS

a. Zinc-coated steel: 29 CFR 1910.27.
b. Plastic or rubber coating pressure-molded to steel: ASTM D 4101, copolymer polypropylene, or ASTM C 443; except that Shore-A durometer hardness shall be 70 plus or minus 5.

Aluminum steps or rungs will not be permitted.

Steps are not required in manholes less than 4 feet (1.2 m) deep.

G302002 1.6 MANHOLE CONSTRUCTION

Where a new manhole is constructed on an existing line, remove existing pipe as necessary to construct the manhole. Cut existing pipe so that pipe ends are approximately flush with the interior face of manhole wall, but not protruding into the manhole. For changes in direction of the sewer and entering branches into the manhole, make a circular curve in the manhole invert of as large a radius as manhole size will permit. For cast-in-place concrete, no parging will be permitted on interior manhole walls.

G302002 1.7 CONNECTIONS TO EXISTING MANHOLES

Pipe connections to existing manholes shall be centered on the manhole. Holes for the new pipe shall be of sufficient diameter to allow packing cement mortar around the entire periphery of the pipe but no larger than 1.5 times the diameter of the pipe. Cutting the manhole shall be done in a manner that will cause the least damage to the walls.

G302002 1.8 CLEANOUTS

Construct cleanouts of cast iron soil pipe and fittings; see G302001, paragraph 1.3.

G302003 LIFT STATIONS AND PUMPING STATIONS

G302003 1.1 GENERAL REQUIREMENTS

If a pump station is allowed, provide all materials, equipment, labor, testing and miscellaneous related items for a packaged lift or pump station system for the facility in compliance with the UFC 3-200-10N, *Civil Engineering*; the state sewerage regulations; and the utility provider's requirements.

G302003 1.2 SUBMERSIBLE PUMPS

Pumps handling raw wastewater shall be capable of passing spheres of at least 3 inches (75 mm) in diameter. The pump's suction and discharge openings shall be at least 4 inches (100 mm) in diameter.

Provide submersible type sewage pumps, with guide rail system. Include ASTM A48, Class 25, nonclog, cast-iron impeller; and hermetically sealed motor with moisture-sensing probe, mechanical seals, and waterproof power cable. Guide rail system shall be constructed of stainless steel. Provide a stainless steel lifting chain for raising and lowering the pump in the basin.

G302003 1.5 PUMP MOTOR

Provide pump motor sized to accommodate pump operation along the entire impeller curve.

G302003 1.6 STATION PIPING WITHIN WET WELL AND VALVE VAULT

G302003 1.6.1 Piping Less than 4-Inch (100 mm) in Diameter

a. PVC Pressure Pipe

1) Pipe: ASTM D 1785, Schedule 80.

2) Fittings: Schedule 80 socket fittings, ASTM D 2467; Schedule 80 threaded fittings, ASTM D 2464.

G302003 1.6.2 Piping 4-inch (100 mm) Diameter and Larger

a. Flanged Ductile Iron Pipe

1) Pipe: AWWA C115 and its appendices.

2) Fittings: AWWA C110 or AWWA C153.

3) Lining: AWWA C104.

G302003 1.7 FORCE MAINS

G302003 1.7.1 Force Mains for Submersible and Suction Lift Pumps

Force mains shall be at least 4 inches (100 mm) in diameter and shall be either ductile iron or PVC pressure pipe.

a. Ductile Iron Pressure Pipe

1) Pipe: AWWA C151, Pressure Class 350.

2) Fittings: AWWA C110 or AWWA C153.

3) Interior Lining: AWWA C104.

4) Exterior Protection (if required): AWWA C105, polyethylene encasement.

b. PVC Pressure Pipe

1) Pipe: AWWA C900, Pressure Class 150.

2) Fittings: Ductile Iron (AWWA C110 or AWWA C153).

G302003 1.8 PIPING ACCESSORIES

G302003 1.8.1 Insulating Joints

Provide between pipes of dissimilar metals a rubber gasket or other approved type of insulating joint or dielectric coupling to effectively prevent metal-to-metal contact between adjacent sections of piping.

G302003 1.8.2 Accessories

Provide flanges, connecting pieces, transition glands, transition sleeves, and other adapters as required.

G302003 1.8.3 Flexible Flanged Coupling

Provide flexible flanged coupling applicable for sewage as indicated. Use flexible flanged coupling designed for a working pressure of 350 psi (2400 kPa).

G302003 1.9 VALVES

Suitable shutoff and check valves shall be provided on the discharge line of each pump. Locate the check valve between the shutoff valve and the pump. Locate valves in accordance with state sewerage regulations. Check valves shall be suitable for the material being handled and placed on the horizontal portion of the discharge piping except for ball check valves, which may be placed in the vertical run. Valves shall be capable of withstanding normal pressure and water hammer. Use valves from one manufacturer. Valves shall have flanges.

G302003 1.9.1 Shut Off Valves

G302003 1.9.1.1 Shut Off Valves Less than 4 Inch (100 mm) in Diameter

Provide PVC ball valves.

G302003 1.9.1.2 Shut Off Valves 4 Inch (100 mm) and Larger in Diameter

AWWA C509 or AWWA C515, nonrising stems, and flanged. Provide valves with handwheels that open by counterclockwise rotation of the valve stem. Provide epoxy coating in accordance with AWWA C550.

G302003 1.9.2 Check Valves

G302003 1.9.2.1 Check Valves Less than 4-Inch (100 mm) in Diameter

Neoprene ball check valve with integral hydraulic sealing flange, designed for a hydraulic working pressure of 175 psi (1200 kPa).

G302003 1.9.2.2 Check Valves 4-Inch (100 mm) and Larger in Diameter

AWWA C508, flanged. Provide a nonclog, swing check valve rated for not less than 175 psig (1200 kPa) working pressure capable of passing 3-inch (75 mm) diameter solids.

G302003 1.9.3 Air Relief Valves

Provide air relief valves at high points in the force main to prevent air locking in accordance with AWWA M51. Provide vacuum relief valves, where required, to relieve negative pressures on force mains.

G302003 1.10 IDENTIFICATION TAGS AND PLATES

Provide valves with tags or plates numbered and stamped for their usage. Use plates and tags of brass or nonferrous material and mounted or attached to the valve.

G302003 1.11 THRUST RESTRAINT

Provide thrust restraint for force mains, valves and other features of the wastewater distribution system.

a. Concrete Thrust Blocks: AWWA C600.
b. Restrained Joints: Pipe manufacturer's recommendations and required length of pipe to be restrained calculated in accordance with UFC 3-200-10N, *Civil Engineering*.

G302003 1.12 STATION CONTROL SYSTEM

G302003 1.12.1 Operating Controls

G302003 1.12.2 Alarm Controls

Provide alarms for all pumping and lift stations; at minimum provide alarms for high level, power failure, pump failure, unauthorized entry or any cause of station malfunction. Provide alarms as required by the pump manufacturer to obtain warranty.

G302003 1.12.3 Telemetry

If required, provide a telemetry system in accordance with state sewer collection and treatment regulations and system owner's requirements to relay alarms to a facility that is manned 24 hours a day. Provide signals to building 440 by fiber or telemetry.

G302003 1.13 UNDERGROUND ENCLOSURES

G302003 1.14 STATION ACCESSORIES

G302003 1.14.1 Ventilation

Covered wet wells shall have provisions for air displacement venting to the outside. Provide galvanized ASTM A-53 pipe with insect screening.

Provide adequate ventilation for all pump stations.

G302003 1.14.2 Metering

Provide devices for measuring wastewater flow at all pumping stations. Provide indicating, totalizing, and recording flow measurement at pumping stations with a 1200 gpm (76 l/s) or greater design peak hourly flow. For smaller stations, provide elapsed time meters in conjunction with pumping rate tests.

G302003 1.14.3 Pipe and Valve Supports

Use Schedule-40 galvanized steel piping conforming to ASTM A-53 for pipe and valve supports. Provide either ANSI B16.3 or ANSI B16.11 galvanized threaded fittings.

G302003 1.14.4 Miscellaneous Metals

Use stainless steel bolts, nuts, washers, anchors, and supports for installation of equipment.

G3030 STORM SEWER

Provide all materials, equipment, labor, testing, and miscellaneous related items to provide storm drainage collection system necessary to drain the site. The storm sewer collection system shall be designed and constructed in accordance with UFC 3-200-10N, *Civil Engineering*; the utility provider's requirements; and the state stormwater management laws and regulations. Design project site to prevent stormwater runoff in excess of the capacity of the existing utility system.

G303001 STORM SEWER PIPING

G303001 1.1 PIPING

Storm sewer piping less than 12 inches (300 mm) in diameter shall be PVC or ductile iron. Storm sewer piping 12 inches (300 mm) and larger in diameter shall be reinforced concrete.

Subsurface drainage piping shall be perforated PVC or HDPE.

G303001 1.1.1 Materials

a. PVC Pipe

1) Piping and Fittings: ASTM D 3034, SDR 35.

2) Joints: ASTM D 3212 and ASTM F 477.

b. Ductile Iron Pipe

1) Piping: ASTM A-746. Provide required Thickness Class based on design information and methods in ASTM A-746.

2) Fittings: AWWA C110 or AWWA C153.

3) Joints: AWWA C111.

4) Interior Coating: AWWA C104.

5) Exterior Protection (if required): AWWA C105, polyethylene encasement.

c. Reinforced Concrete Pipe

1) Circular Pipe: ASTM C 76M (ASTM C 76). Provide required Class based on design information and methods in ASTM C 76M (ASTM C 76), Class-III minimum.

2) Elliptical Pipe: ASTM C 507M (ASTM C 507). Provide required Class based on design information and methods in ASTM C 76M (ASTM C 76).

3) Joints:

a) ASTM C 990M (ASTM C 990) butyl gaskets;

b) ASTM C 443M (ASTM C 443) rubber O-ring joints; or

c) AASHTO M 198, Type B preformed plastic gaskets.

d. Perforated PVC Pipe: ASTM D 2729.

e. Perforated HDPE Pipe

1) Piping and Fittings: AASHTO M 252, Type S, corrugated.

2) Joints: Soiltight.

G303001 1.1.2 Installation

Install piping in accordance with manufacturer's recommendations.

a. PVC: ASTM D 2321. Do not use ASTM D 2321 Class IV or V materials for bedding, haunching or initial backfill materials.
b. Ductile Iron: AWWA C600.
c. Reinforced Concrete: ACPA 01-102 and 01-103.
d. Perforated PVC and Perforated HDPE: ASTM D 2321. Do not use ASTM D 2321 Class IV or V materials for bedding, haunching or initial backfill materials.

G303001 1.2 PIPING FOR CLEANOUTS

G303001 1.2.1 Materials

a. Cast-Iron Soil Pipe for Cleanouts

1) Pipe: ASTM A-74, service.

2) Joints: ASTM C 564 compression-type rubber gaskets.

3) Exterior Protection (if required): AWWA C105, polyethylene encasement.

G303001 1.2.2 Installation

Install cast iron pipe and fittings in accordance with the recommendations of the pipe manufacturer.

G303002 STORM SEWER STRUCTURES

G303002 1.1 GENERAL REQUIREMENTS

Provide all materials, equipment, labor, testing, and miscellaneous related items for the drainage structures in accordance with the following:

a. Structure rim elevations shall be set flush with finished surface of paved areas or 1 inch (25 mm) above finished grade in unpaved areas.
b. Resilient connectors for making joints between manhole and pipes entering manhole shall conform to ASTM C 923M (ASTM C 923).
c. Provide precast or cast-in-place concrete drainage structures, except cast-in-place concrete is required for airfield drainage structures, headwalls, and gutters.

G303002 1.2 PRECAST CONCRETE INLETS

Provide work and materials in accordance with applicable requirements of the State Highway Specifications (SHS) and standards where the project is located.

G303002 1.3 CAST-IN-PLACE CONCRETE DRAINAGE STRUCTURES

Provide work and materials in accordance with drainage structures indicated in the State Highway Specifications (SHS) and standards where the project is located.

For airfield drainage structures, provide work and materials in accordance with FAA ACA 150/5370-10B.

G303002 1.4 DRAINAGE STRUCTURE FRAMES AND COVERS

FS A-A-60005; cast iron or ductile iron; designed to accommodate the traffic loadings. The word "Storm" shall be stamped or cast into covers so that it is plainly visible.

G303002 1.5 DRAINAGE STRUCTURE STEPS

a. Zinc-coated steel: 29 CFR 1910.27.
b. Plastic or rubber coating pressure-molded to steel: ASTM D 4101, copolymer polypropylene, or ASTM C 443; except Shore-A durometer hardness shall be 70 plus or minus 5.

Aluminum steps or rungs will not be permitted.

Steps are not required in structures less than 4 feet (1.2 m) deep.

G303002 1.6 DRAINAGE STRUCTURE CONSTRUCTION

Where a new structure is constructed on an existing line, remove existing pipe as necessary to construct the structure. Cut existing pipe so that pipe ends are approximately flush with the interior face of structure wall, but not protruding into the structure.

G303002 1.7 CONNECTIONS TO EXISTING STRUCTURES

Pipe connections to existing structures shall be centered on the structure. Holes for the new pipe shall be of sufficient diameter to allow packing cement mortar around the entire periphery of the pipe but no larger than 1.5 times the diameter of the pipe. Cutting the structure shall be done in a manner that will cause the least damage to the walls.

G303002 1.8 CLEANOUTS

Construct cleanouts of cast iron soil pipe and fittings; see G303001, paragraph 1.2.

G303003 LIFT STATIONS

A stormwater pump station(s) will not be allowed.

G303004 CULVERTS

Culverts less than 12 inches (300 mm) in diameter shall be PVC or ductile iron. Culverts 12 inches (300 mm) and larger in diameter shall be reinforced concrete.

Flared end sections shall the same material as pipe material.

Provide erosion control riprap in accordance with the State Highway Specifications (SHS) and standards where the project is located.

See G303001, paragraphs 1.1.1 and 1.1.2 for material and installation requirements.

G303005 HEADWALLS

Provide cast-in-place concrete headwalls in accordance with the State Highway Specification (SHS) and standards where the project is located.

G303006 EROSION & SEDIMENT CONTROL MEASURES

Refer to Section G103011.

G303007 STORMWATER MANAGEMENT

G303007 1.1 STORMWATER COLLECTION AND STORAGE

Provide permanent detention/retention ponds and other drainage features to regulate stormwater runoff and to prevent damage to the site and off-site. Integrate permanent stormwater management Low Impact Development (LID) BMP features into the total site design to provide an aesthetically pleasing and harmonious landscape. Develop and construct the ponds and other drainage features in accordance with UFC 3-200-10N, *Civil Engineering*, and the state stormwater management Laws and Regulations.

G3040 HEATING DISTRIBUTION

G304001 OVERHEAD HOT WATER SYSTEMS

G304001 1.1 PIPING & FITTINGS

Hot water piping shall be ASTM A-53, Type E (electric-resistance welded), Grade A or B), or Type S (seamless, Grade A or B); black steel, Weight Class XS (Extra Strong). ASTM A 106, Grade A or B, black steel, Schedule 80 may be used.

G304001 1.2 INSULATION

Provide mineral fiber, calcium silicate, or cellular glass pipe insulation with aluminum jacket which matches existing or surrounding insulation. Paint jacket to suit Base Architectural Plan. The minimum insulation thickness shall be in accordance with the following table:

Table 1 Insulation Thickness for Hot Water Systems

Nominal Pipe Diameter inches (mm)	Mineral Fiber inches (mm)	Calcium Silicate inches (mm)	Cellular Glass inches (mm)
1.00 (25)	1.5 (38)	1.5 (38)	1.5 (38)
1.5 (38)	1.5 (38)	1.5 (38)	1.5 (38)
2.0 (51)	1.5 (38)	1.5 (38)	1.5 (38)
2.5 (64)	1.5 (38)	1.5 (38)	1.5 (38)
3.0 (76)	1.5 (38)	1.5 (38)	1.5 (38)
4.0 (100)	2.0 (51)	2.5 (64)	1.5 (38)
5.0 (125)	2.0 (51)	2.5 (64)	1.5 (38)
6.0 (150)	2.5 (64)	2.5 (64)	1.5 (38)
8.0 (200)	2.5 (64)	2.5 (64)	1.5 (38)
10.0 (250)	2.5 (64)	2.5 (64)	1.5 (38)
12.0 (300)	2.5 (64)	2.5 (64)	1.5 (38)
14.0 (350)	2.5 (64)	2.5 (64)	1.5 (38)
16.0 (400)	2.5 (64)	2.5 (64)	1.5 (38)
18.0 (450)	2.5 (64)	2.5 (64)	1.5 (38)

G304001 1.3 EXPANSION

Compensate for piping expansion by utilizing expansion loops and joints. Provide guided slip or flexible ball type expansion joints.

G304001 1.4 SUPPORTS

MSS SP-58 and MSS SP-69, adjustable supports with insulation protection saddles. Provide stainless steel axles for rollers. Provide support poles with guy wires and hardware.

G304002 OVERHEAD STEAM SYSTEMS

G304002 1.1 PIPING & FITTINGS

G304002 1.1.1 Steam Piping

Steam piping shall be ASTM A-53, Type E (electric-resistance welded, Grade A or B) or Type S (seamless, Grade A or B), black steel. Provide Weight Class STD (Standard) for welding end connections. Provide Weight Class XS (Extra Strong) for threaded end connections. ASTM A 106, Grade A or B, black steel, Schedule 40 may be used for pipe sizes through 9 inches (250 mm), and minimum pipe wall thickness of 0.35 inches (9.5 mm) for pipe sizes 12 inches (300 mm) and larger for welding end connections. Provide Schedule 80 for threaded end connections.

G304002 1.1.2 Condensate Piping

Condensate piping shall be ASTM A-53, Type E (electric-resistance welded), Grade A or B), or Type S (seamless, Grade A or B); black steel, Weight Class XS (Extra Strong). ASTM A 106, Grade A or B, black steel, Schedule 80 may be used.

G304002 1.2 INSULATION

Provide fibrous glass, calcium silicate, or cellular glass pipe insulation with aluminum jacket which matches existing or surrounding insulation. Paint jacket to suit Base Architectural Plan. The minimum insulation thickness shall be in accordance with the following tables:

Table 1 Insulation Thickness for Steam Systems

Nominal Pipe Diameter inches (mm)	Fibrous Glass inches (mm)	Calcium Silicate inches (mm)	Cellular Glass inches (mm)
1.00 (25)	3.5 (90)	4.0 (100)	*
1.5 (38)	3.5 (90)	4.0 (100)	*
2.0 (51)	3.5 (90)	4.0 (100)	*
2.5 (64)	3.5 (90)	4.0 (100)	*
3.0 (76)	4.0 (100)	4.5 (115)	*
4.0 (100)	4.0 (100)	4.5 (115)	*
5.0 (125)	4.5 (115)	5.0 (125)	*
6.0 (150)	4.5 (115)	5.0 (125)	*

8.0 (200)	5.0 (125)	6.0 (150)	*
10.0 (250)	5.0 (125)	6.0 (150)	*
12.0 (300)	5.0 (125)	6.0 (150)	*
14.0 (350)	5.0 (125)	6.0 (150)	*
16.0 (400)	5.0 (125)	6.0 (150)	*
18.0 (450)	5.0 (125)	6.0 (150)	*

* Cellular glass pipe insulation having an insulating efficiency not less than that of the specified thickness of calcium silicate may be provided.

Table 2 Insulation Thickness for Condensate Systems

Nominal Pipe Diameter inches (mm)	Mineral Fiber inches (mm)	Fibrous Glass inches (mm)
1.00 (25)	2.5 (64)	*
1.5 (38)	2.5 (64)	*
2.0 (51)	2.5 (64)	*
2.5 (64)	2.5 (64)	*
3.0 (76)	3.0 (76)	*
4.0 (100)	3.0 (76)	*
5.0 (125)	3.5 (90)	*
6.0 (150)	3.5 (90)	*
8.0 (200)	3.5 (90)	*
10.0 (250)	3.5 (90)	*
12.0 (300)	3.5 (90)	*
14.0 (350)	3.5 (90)	*
16.0 (400)	3.5 (90)	*
18.0 (450)	3.5 (90)	*

* Fibrous glass pipe insulation having an insulating efficiency not less than that of the specified thickness of mineral fiber may be provided.

G304002 1.3 EXPANSION

Compensate for piping expansion by utilizing expansion loops and joints. Provide guided slip or flexible ball type expansion joints.

G304002 1.4 SUPPORTS

MSS SP-58 and MSS SP-69, adjustable supports with insulation protection saddles. Provide stainless steel axles for rollers. Provide support poles with guy wires and hardware.

G304003 UNDERGROUND HOT WATER SYSTEMS

G304003 1.1 PIPING & FITTINGS

Direct buried, factory pre-fabricated, pre-insulated, piping systems shall consist of a service pipe with polyurethane insulation and a high-density polyethylene (HDPE) jacket. Provide factory fabricated fittings and components. Field insulation of fittings will not be allowed.

G304003 1.2 INSULATION

The minimum insulation thickness shall be in accordance with the following tables:

Table 1 Insulation Thickness for Drainable/Dryable Systems

Nominal Pipe Diameter inches (mm)	Paroc inches (mm)	Epitherm inches (mm)	Kaylo-10 Thermo-12 Super Caltemp inches (mm)
1.00 (25)	2.0 (51)	2.5 (64)	4.0 (100)
1.5 (38)	2.0 (51)	2.5 (64)	4.0 (100)
2.0 (51)	2.5 (64)	3.5 (90)	4.5 (115)
2.5 (64)	2.5 (64)	3.5 (90)	4.5 (115)
3.0 (76)	3.0 (76)	4.0 (100)	5.0 (125)
4.0 (100)	3.0 (76)	4.0 (100)	5.0 (125)
5.0 (125)	3.0 (76)	4.0 (100)	5.0 (125)
6.0 (150)	3.5 (90)	4.5 (115)	5.5 (140)
8.0 (200)	3.5 (90)	4.5 (115)	5.5 (140)
10.0 (250)	4.0 (100)	5.0 (125)	6.0 (150)
12.0 (300)	4.0 (100)	5.0 (125)	6.0 (150)
14.0 (350)	4.0 (100)	5.0 (125)	6.0 (150)
16.0 (400)	4.0 (100)	5.0 (125)	6.0 (150)
18.0 (450)	4.0 (100)	5.0 (125)	6.0 (150)

Table 2 Insulation Thickness for Water Spread Limiting Systems

Nominal Pipe Diameter inches (mm)	Calcium Silicate inches (mm)	Polyurethane inches (mm)
1.00 (25)	N/A	N/A
1.5 (38)	N/A	N/A
2.0 (51)	N/A	N/A
2.5 (64)	N/A	N/A
3.0 (76)	1.00 (25)	1.23 (31)
4.0 (100)	1.00 (25)	1.23 (31)
5.0 (125)	N/A	N/A
6.0 (150)	1.5 (38)	1.34 (34)
8.0 (200)	2.0 (51)	1.21 (30)
10.0 (250)	2.5 (64)	1.31 (33)
12.0 (300)	2.0 (51)	1.29 (33)
14.0 (350)	N/A	N/A
16.0 (400)	N/A	N/A
18.0 (450)	N/A	N/A

G304003 1.3 UHDS DESIGN

Design and provide direct buried, factory-prefabricated, pre-insulated main hot water piping, including piping in manholes. Asbestos cement or plastic conduit is not acceptable. The UHDS representative shall be certified in writing by the UHDS manufacturer to be technically qualified and experienced in the installation of the system. Provide a Certificate of Satisfactory Operation certifying that at least 3 systems installed by the UHDS manufacturer within the previous 10 years have and are operating satisfactorily for not less than 5 years. The certificate shall include verification information.

G304003 1.4 VALVING

Provide isolation valves on supply and return lines at take-offs for service to each building. Valves shall be located in valve boxes. Valves shall be ASME class 150.

G304003 1.5 EXPANSION

Compensate for piping expansion by utilizing expansion loops.

G304004 UNDERGROUND STEAM DISTRIBUTION SYSTEMS

G304004 1.1 PIPING & FITTINGS

Direct buried, factory pre-fabricated, pre-insulated, steam and condensate piping systems shall consist of a steel service pipe with polyurethane insulation and a high-density polyethylene (HDPE) jacket. Provide factory fabricated fittings and components. Field insulation of fittings will not be allowed.

G304004 1.2 INSULATION

The minimum insulation thickness shall be in accordance with the following tables:

Table 1 Insulation Thickness for Drainable/Dryable Systems

Nominal Pipe Diameter inches (mm)	Paroc inches (mm)	Epitherm inches (mm)	Kaylo-10 Thermo-12 Super Caltemp inches (mm)
1.00 (25)	2.0 (51)	2.5 (64)	4.0 (100)
1.5 (38)	2.0 (51)	2.5 (64)	4.0 (100)
2.0 (51)	2.5 (64)	3.5 (90)	4.5 (115)
2.5 (64)	2.5 (64)	3.5 (90)	4.5 (115)
3.0 (76)	3.0 (76)	4.0 (100)	5.0 (125)
4.0 (100)	3.0 (76)	4.0 (100)	5.0 (125)
5.0 (125)	3.0 (76)	4.0 (100)	5.0 (125)
6.0 (150)	3.5 (90)	4.5 (115)	5.5 (140)
8.0 (200)	3.5 (90)	4.5 (115)	5.5 (140)
10.0 (250)	4.0 (100)	5.0 (125)	6.0 (150)
12.0 (300)	4.0 (100)	5.0 (125)	6.0 (150)
14.0 (350)	4.0 (100)	5.0 (125)	6.0 (150)
16.0 (400)	4.0 (100)	5.0 (125)	6.0 (150)
18.0 (450)	4.0 (100)	5.0 (125)	6.0 (150)

Table 2 Insulation Thickness for Water Spread Limiting Systems

Nominal Pipe Diameter inches (mm)	Calcium Silicate inches (mm)	Polyurethane inches (mm)
1.00 (25)	N/A	N/A

1.5 (38)	N/A	N/A
2.0 (51)	N/A	N/A
2.5 (64)	N/A	N/A
3.0 (76)	1.00 (25)	1.23 (31)
4.0 (100)	1.00 (25)	1.23 (31)
5.0 (125)	N/A	N/A
6.0 (150)	1.5 (38)	1.34 (34)
8.0 (200)	2.0 (51)	1.21 (30)
10.0 (250)	2.5 (64)	1.31 (33)
12.0 (300)	2.0 (51)	1.29 (33)
14.0 (350)	N/A	N/A
16.0 (400)	N/A	N/A
18.0 (450)	N/A	N/A

Table 3 Insulation Thickness for Condensate Return Systems

Nominal Pipe Diameter inches (mm)	Paroc inches (mm)	Epitherm inches (mm)	Kaylo-10 Thermo-12 Super Caltemp inches (mm)
1.00 (25)	2.0 (51)	2.5 (64)	4.0 (100)
1.5 (38)	2.0 (51)	2.5 (64)	4.0 (100)
2.0 (51)	2.5 (64)	3.5 (90)	4.5 (115)
2.5 (64)	2.5 (64)	3.5 (90)	4.5 (115)
3.0 (76)	3.0 (76)	4.0 (100)	5.0 (125)
4.0 (100)	3.0 (76)	4.0 (100)	5.0 (125)
5.0 (125)	3.0 (76)	4.0 (100)	5.0 (125)
6.0 (150)	3.5 (90)	4.5 (115)	5.5 (140)
8.0 (200)	3.5 (90)	4.5 (115)	5.5 (140)
10.0 (250)	4.0 (100)	5.0 (125)	6.0 (150)
12.0 (300)	4.0 (100)	5.0 (125)	6.0 (150)
14.0 (350)	4.0 (100)	5.0 (125)	6.0 (150)

16.0 (400)	4.0 (100)	5.0 (125)	6.0 (150)
18.0 (450)	4.0 (100)	5.0 (125)	6.0 (150)

G304004 1.3 UHDS DESIGN

Design and provide direct buried, factory-prefabricated, pre-insulated main steam and condensate piping in separate conduits and including piping in manholes. Asbestos cement or plastic conduit is not acceptable. The UHDS representative shall be certified in writing by the UHDS manufacturer to be technically qualified and experienced in the installation of the system. Provide a Certificate of Satisfactory Operation certifying that at least 3 systems installed by the UHDS manufacturer within the previous 10 years have and are operating satisfactorily for not less than 5 years. The certificate shall include verification information.

G304004 1.4 VALVING

Provide isolation valves on supply and return lines at take-offs for service to each building. Valves shall be located in manholes. Valves shall be ASME class 150.

G304004 1.5 EXPANSION

Compensate for piping expansion by utilizing expansion loops. Locate anchors outside manholes.

G304005 REINFORCED CONCRETE MANHOLES & VALVE BOXES

G304005 1.1 MANHOLE CONSTRUCTION

Manholes shall be shall be constructed of reinforced, 3000 psi (206.8 bar) concrete and shall extend a minimum of 6 inches (300 mm) above grade. Depth shall be as required to maintain proper pipe slopes. Construct manhole floor and sides in one monolithic pour. Provide galvanized steel or sectioned aluminum, open grate, or solid cover as indicated in ESR Section G30. Provide ventilation openings for solid cover. Provide ladder. Ladder shall be steel with non-slip surfaces and anchored to the wall. Manhole floor and walls shall be watertight. Provide sleeves or core drill openings for pipes with modular mechanical seals. Provide sump pit for pump.

G304005 1.2 VALVE BOX CONSTRUCTION

Provide cast-iron or ductile-iron box of a suitable size. Provide cast-iron or ductile-iron cover for the box with word(s) describing the utility cast on the cover.

G304005 1.3 MANHOLE SUMP PUMPS

Provide vertical sump pump. Operating temperature design must be 195 degrees F (93 degrees C) minimum. Provide with 2-pole float control.

G304090 OTHER HEATING DISTRIBUTION

G304090 1.1 WARNING & IDENTIFICATION TAPE

Polyethylene plastic tape manufactured specifically for warning and identifying buried utility lines.

G304090 1.2 CORROSION PROTECTION

Provide a cathodic protection system for the underground piping system. System shall be designed by a National Association of Corrosion Engineers (NACE) certified Cathodic Protection Engineer. The corrosion engineer shall obtain soil data and existing system conditions. Corrosion engineer shall supervise, inspect, and test the installation and performance of the cathodic protection system. Test stations shall be post mounted and placed at the manhole or nearby building. Test stations shall be located at each end of each cathodically-protected section.

Provide an impressed current or sacrificial anode system in accordance with NACE SP0169 (2007) Control of External Corrosion on Underground or Submerged Metallic Piping Systems.

G3050 COOLING DISTRIBUTION

G305001 OVERHEAD COOLING SYSTEMS

G305001 1.1 PIPING & FITTINGS

G305001 1.1.1 Chilled and Condenser Water Piping

Chilled and condenser water piping shall be electric resistance welded or seamless Schedule 40 black steel pipe conforming to ASTM A-53. Piping 4 inch (100 mm) and smaller may be ASTM B 88 Type K or L copper.

G305001 1.1.2 Steel Pipe Fittings

For piping 2 inch (50 mm) and smaller, provide ANSI/ASME B16.3 malleable iron screwed fittings or ASME B16.11 socket welding (Class 3000) or threaded type (Class 2000). Provide ASME/ANSI B16.9 butt-welding fittings or ASME/ANSI B16.5 flanged type for piping 2-1/2 inch (63 mm) and larger. Grooved joint pipe coupling systems of appropriate pressure rating are acceptable in lieu of welded or screwed fittings.

G305001 1.1.3 Copper Fittings

Provide ANSI B16.18 cast bronze solder joint type or ASME/ANSI B16.22 wrought copper solder joint type.

G305001 1.2 INSULATION

Provide mineral fiber, Urethane, cellular glass, Faced Phenolic Foam, or Flexible Cellular pipe insulation with aluminum jacket in accordance with ESR Section G30. The minimum insulation thickness shall be in accordance with the following table:

Table 1 Insulation Thickness for Cold Water Systems

Nominal Pipe Diameter inches (mm)	Mineral Fiber inches (mm)	Urethane inches (mm)	Cellular Glass inches (mm)	Faced Phenolic Foam inches (mm)	Flexible Cellular inches (mm)
1.00 (25)	1.00 (25)	0.75 (19)	1.5 (38)	1.00 (25)	0.75 (19)

1.5 (38)	1.00 (25)	0.75 (19)	1.5 (38)	1.00 (25)	0.75 (19)
2.0 (51)	1.00 (25)	0.75 (19)	1.5 (38)	1.00 (25)	0.75 (19)
2.5 (64)	1.00 (25)	0.75 (19)	1.5 (38)	1.00 (25)	0.75 (19)
3.0 (76)	1.00 (25)	0.75 (19)	1.5 (38)	1.00 (25)	0.75 (19)
4.0 (100)	1.5 (38)	0.75 (19)	1.5 (38)	1.00 (25)	0.75 (19)
5.0 (125)	1.5 (38)	0.75 (19)	1.5 (38)	1.00 (25)	0.75 (19)
6.0 (150)	1.5 (38)	1.00 (25)	1.5 (38)	1.5 (38)	1.00 (25)
8.0 (200)	1.5 (38)	1.00 (25)	1.5 (38)	1.5 (38)	1.00 (25)
10.0 (250)	1.5 (38)	1.00 (25)	1.5 (38)	1.5 (38)	1.00 (25)
12.0 (300)	1.5 (38)	1.00 (25)	1.5 (38)	1.5 (38)	1.00 (25)
14.0 (350)	1.5 (38)	1.00 (25)	1.5 (38)	1.5 (38)	1.00 (25)
16.0 (400)	1.5 (38)	1.00 (25)	1.5 (38)	1.5 (38)	1.00 (25)
18.0 (450)	1.5 (38)	1.00 (25)	1.5 (38)	1.5 (38)	1.00 (25)

G305001 1.3 SUPPORTS

Provide MSS SP-58 and MSS SP-69, adjustable supports with insulation protection saddles. Provide stainless steel axles for rollers. Provide support poles with guy wires and hardware.

G305001 1.4 EXPANSION

Compensate for piping expansion by utilizing expansion loops and joints. Provide guided slip or flexible ball type expansion joints.

G305002 UNDERGROUND COOLING SYSTEMS

G305002 1.1 PIPING & FITTINGS

Provide direct buried, factory-prefabricated, pre-insulated, chilled water piping systems. All fittings and accessories shall be designed and factory-fabricated to prevent moisture from entering into the system. Backfill and overall installation shall meet the requirements of the piping system manufacturer.

G305002 1.2 VALVES

Provide isolation valves on supply and return lines at take-offs for service to each building. Valves shall be located in valve boxes.

G305090 OTHER COOLING DISTRIBUTION

G305090 1.1 EXPANSION

Compensate for piping expansion by utilizing expansion loops. Locate anchors outside manholes.

G305090 1.2 WARNING & IDENTIFICATION TAPE

Polyethylene plastic tape manufactured specifically for warning and identifying buried utility lines.

G305090 1.3 CORROSION PROTECTION

Provide a cathodic protection system for the underground chilled water and condenser water piping system. System shall be designed by a National Association of Corrosion Engineers (NACE) certified Cathodic Protection Engineer. The corrosion engineer shall obtain soil data and existing system conditions. Corrosion engineer shall supervise, inspect, and test the installation and performance of the cathodic protection system. Test stations shall be post mounted and placed at the manhole or nearby building. Test stations shall be located at each end of each cathodically protected section.

Provide an impressed current or sacrificial anode system in accordance with NACE SP0169 (2007) Control of External Corrosion on Underground or Submerged Metallic Piping Systems.

-- End of Section --

THIS PAGE HAS BEEN INTENTIONALLY LEFT BLANK

SECTION G40

SITE ELECTRICAL UTILITIES
8/08

G40 GENERAL

G40 1.1 NARRATIVE

This section covers installations exterior to the facility up to the five foot line. See PTS Section D50, *Electrical*, for continuation of systems into the building.

G40 1.2 ELECTRICAL DESIGN GUIDANCE

Provide the design and installation in accordance with the following references. This Performance Technical Specification (PTS) adds clarification to the fundamental requirements contained in the following Government Standards. The general requirements of this PTS section are located in PTS Section Z10, *General Performance Technical Specification*.

When all product Quality Control information is included in the Unified Facility Criteria (UFC) and there are requirement options identified in the ESR, then the UniFormat Level 4 titles (and possible subtitles) are included without additional verbiage. One example of this is G401008, GROUNDING SYSTEMS.

G40 1.2.1 Government Standards

UNITED FACILITIES CRITERIA (UFC)

UFC 3-501-01, *Electrical Engineering*

UNIFIED FACILITIES GUIDE SPECIFICATIONS (UFGS)

UFGS 26 12 19.10, *Three-Phase Pad-Mounted Transformers*

UFGS 26 13 00.00 20, *SF6 Insulated Pad-Mounted Switchgear*

UFGS 33 71 01.00 20, *Overhead Transmission and Distribution*

UFGS 26 56 00, *Exterior Lighting*

UFGS 33 82 00, *Telecommunications outside Plant (OSP)*

G40 1.3 QUALITY ASSURANCE

Qualifications, certifications, and Test Plans indicated herein shall be submitted 45 calendar days prior to the expected date of execution. Notify the Contracting Officer 14 calendar days prior to all testing. Submit test results within 7 calendar days of completion of testing.

The Designer of Record is responsible for approving the submittals listed below.

G40 1.3.1 Qualified Testing Organization

Contractor shall engage the services of a qualified testing organization to provide inspection, testing, calibration, and adjustment of the electrical distribution system and equipment listed in paragraph entitled "Acceptance Tests and Inspections" herein. Organization shall be independent of the supplier, manufacturer, and installer of the equipment. The organization shall be a first tier subcontractor.

a. Submit name and qualifications of organization. Organization shall have been regularly engaged in the testing of electrical materials, devices, installations, and systems for a minimum of 5 years. The organization shall have a calibration program, and test instruments used shall be calibrated in accordance with NETA ATS.
b. Submit name and qualifications of the lead engineering technician performing the required testing services. Include a list of three comparable jobs performed by the technician with specific names and telephone numbers for reference. Testing, inspection, calibration, and adjustments shall be performed by an engineering technician, certified by NETA or the National Institute for Certification in Engineering Technologies (NICET) with a minimum of 5 years' experience inspecting, testing, and calibrating electrical distribution and generation equipment, systems, and devices.

G40 1.3.2 NEC Qualified Worker

Provide in accordance with NFPA 70. Qualified Workers shall be allowed to be assisted by helpers on a 1 to 1 ratio, provided such helpers are registered in recognized apprenticeship programs. Submit a certification confirming NEC Qualified Worker requirements.

G40 1.3.3 Qualified Medium Voltage Electrician

All workers on medium voltage electrical crews shall have 5 years experience working medium voltage systems on similar projects involving the same or higher voltage.

G40 1.3.4 Qualified Cable Splicer (Medium Voltage Cable)

Certification shall include the training, and experience of the individual on the specific type and classification of medium voltage cable to be provided under this contract.

In order to establish the cable splicer's competency, the Contractor shall be required to submit the following 30 calendar days prior to commencement of the splice/termination:

a. Documentation to verify that the individual has completed a splice and or termination of the type to be installed under this contract.
b. Documentation that said splice/termination has been tested and passed in accordance with NETA ATS requirements. Test results shall be included.
c. A statement of the number of years in which the individual has been splicing/terminating medium voltage cable.

G40 1.3.5 Qualified Cable Splicer (Telecommunications)

Certification shall include the training, and experience of the individual on specific type and classification of telecommunications cable to be provided under this contract.

G40 1.3.6 Qualified Cable Installer and Splicer (Fiber Optic Cable)

Certification shall include the training, and experience of the individual on specific type and classification of Fiber Optic media to be provided under this contract.

G40 1.3.7 Qualified Fiber Optic (FO) Cable Manufacturer

The FO media manufacturer shall have a minimum of 3 years experience in the manufacturing, assembly, and factory testing of FO media that complies with RUS REA Bull 1753F-601 (PE-90). Manufacturer shall provide a list of customers with 3 years of maintenance logs documenting experience with government customers.

G40 1.3.8 Material Standards

Ensure service support and provide manufacturer's nameplate in accordance with PTS Section Z10, *General Performance Technical Specification*.

G40 1.3.8.1 Warning Labels

Each enclosure of electrical equipment, including substations, pad-mounted transformers, pad-mounted switches, pad-mounted sectionalizing termination cabinets, and switchgear, shall have a warning label identifying the enclosure as 1) containing energized electrical equipment and 2) an arc flash hazard.

G40 1.3.9 Factory Testing

The Government reserves the right to witness all factory testing. The manufacturer shall have a calibration program that assures that all applicable test instruments are maintained within rated accuracy.

G40 1.3.10 Electrical System Startup and Testing

Submit test plans for approval. The test plans shall be tailored to the systems provided.

The test plan shall list make and model and provide functional description of the test instruments and accessories and shall describe the setup of the tests to be conducted. Test instruments shall be capable of measuring and recording or displaying test data at a higher resolution and greater accuracy than specified for the equipment's performance.

G40 1.3.10.1 Factory Trained Engineer

Provide a factory trained engineer to supervise start-up and testing as required in referenced specifications.

G40 1.3.10.2 Performance Verification Testing

The Contractor shall show by demonstration in service that all circuits and devices are in operating condition. Tests shall be such that each item of control equipment will function not less than five times. The Contractor shall provide all necessary test equipment, tools, fuel, load banks, labor, and materials for testing. As a minimum, all systems shall be tested in accordance with manufacturer's recommendations. Additional testing requirements for the various systems are described with those systems, hereinafter. The Contractor shall assure that all applicable test instruments are maintained within rated accuracy. Dated calibration labels shall be visible on all test equipment.

Submit a separate electrical field test plan in accordance with manufacturer's recommendations and that conforms to NETA ATS for each piece of Electrical Distribution Equipment and System requiring Performance Verification Testing.

The following items identify specific test requirements. Additional test requirements are contained in the applicable UFGS.

a. Cable - Test cable in accordance with the manufacturer's recommendations and NETA ATS. Adhere to precautions and limits as specified in the applicable NEMA/ICEA Standard for the specific cable.
b. Grounding - Test ground systems in accordance with the manufacturer's recommendations and NETA ATS.
c. Site Lighting - Contractor's Quality Control (CQC) representative shall perform a field survey of site lighting systems in accordance with IESNA for acceptance. Show that the lighting system operates in accordance with the user’s requirements and is in accordance with designed levels. Provide certification that the measured lighting levels conform to the design requirements.
d. Telecommunications wiring - Test all cables in accordance with industry standards.

G40 1.3.10.3 Acceptance Tests and Inspections

The Qualified Testing Organization shall provide the Acceptance Tests and Inspections test plan and procedures and perform the acceptance tests and inspections. Test methods, procedures, and test values shall be performed and evaluated in accordance with NETA ATS, the manufacturer's recommendations, and paragraph entitled "Field Quality Control" of each applicable specification section. Tests identified as optional in NETA ATS are not required unless otherwise specified. Equipment shall be placed in service only after completion of required tests and evaluation of the test results has been completed. Contractor shall supply to the testing organization complete sets of shop drawings, settings of adjustable devices, and other information necessary for an accurate test and inspection of the system prior to the performance of any final testing.

Specific test requirements are contained in the UFGS for equipment.

G40 1.4 DESIGN SUBMITTALS

Design Submittals shall be in accordance with PTS Section Z10, *General Performance Technical Specifications*, UFGS Section 01 33 10.05 20, *Design Submittal Procedures*, UFC 1-300-09N, *Design Procedures*, and UFC 3-500-10N, *Electrical Engineering*.

In addition, UFGS sections listed below or in the body of the PTS text are to be used by the Designer of Record (DOR) as a part of the design submittal. If the UFGS products or systems are applicable to the project, the DOR shall edit these referenced UFGS sections and submit them as a part of the design submittal specification. Edit the specification sections in accordance with the limitations stated in PTS Section Z10, *General Performance Technical Specifications*.

UFGS 26 11 13.00 20, *Primary Unit Substation*

UFGS 26 11 16, *Secondary Unit Substations*

UFGS 26 12 19.10, *Three-Phase Pad-Mounted Transformers*

UFGS 26 12 19.20, *Single-Phase Pad-Mounted Transformers*

UFGS 26 13 00.00 20, *SF6 Insulated Pad-Mounted Switch Gear*

UFGS 26 23 00: *Switchboards and Switchgear*

UFGS 33 71 01.00 20, *Overhead Transmission and Distribution*

G40 1.5 CONSTRUCTION SUBMITTALS

Submit construction submittals in accordance with PTS Section Z10, *General Performance Technical Specifications*. In addition to the PTS Section Z10 requirements, the Designer of Record (DOR) shall approve the following construction submittals as a minimum:

OMSI Information for Electrical Equipment (if OMSI Manual for the entire project is not already required); all "G" item submittals listed in the submittals of the specifications sections identified in the Design Submittals paragraph above; and all "G" item submittals listed in Government Surveillance UFGS Section 01 33 00.05 20, *Construction Submittal Procedures*.

Provide certification that all adjustable protective device settings have been set in accordance with the coordination study for the as-built equipment and configuration.

G4010 ELECTRICAL DISTRIBUTION

G401001 SUBSTATIONS

When secondary unit substations are required, the Designer of Record shall utilize UFGS Section 26 11 16, *Secondary Unit Substation*, and UFGS Section 26 23 00, *Switchboards and Switchgear*, for the project specification, and shall submit the edited specification section as a part of the design submittal for the project.

G401002 TRANSFORMERS

When transformers are required, the Designer of Record shall utilize UFGS Section 26 12 19.10, *Three-Phase Pad Mounted Transformers*, UFGS Section 26 12 19.20, *Single-Phase Pad Mounted Transformers*, or UFGS Section 33 71 01.00 20, *Overhead Transmission and Distribution*, for the project specification, and shall submit the edited specification section as a part of the design submittal for the project.

G401003 SWITCHES, CONTROLS, AND DEVICES

When switches or control devices are required, the Designer of Record shall utilize UFGS Section 26 13 00.00 20, *SF6 Insulated Pad Mounted Switchgear*, or UFGS Section 33 71 01.00 20, *Overhead Transmission and Distribution*, for the project specification, and shall submit the edited specification section as a part of the design submittal for the project.

G401004 OVERHEAD ELECTRIC CONDUCTORS

Power line conductors shall be strung in accordance with manufacturer's standard sag and tension recommendations.

G401005 TOWERS, POLES, CROSSARMS, AND INSULATORS

Wood poles shall comply with ANSI 05.1 and RUS 1728F-700. Pressure treat poles in accordance with AWPA C1 and AWPA C4 as referenced in RUS 1728F-700. The quality of each pole shall be ensured with "WQC" (wood quality control) brand on each piece or by an approved inspection agency report. Do not use creosote-treated poles, lodgepole pine, or western larch pine poles.

Concrete poles shall comply with ANSI loadings for distribution poles.

The size of poles required, class, height and other data, shall be determined by the designer of record to meet requirements of the pole line. Crossarms shall be wood, steel, or fiberglass in accordance with industry and local standards. Insulators, cutouts, and associated equipment shall be determined by the Designer of Record to meet system requirements.

G401006 UNDERGROUND ELECTRIC CONDUCTORS

Route underground cables to minimize splices. Cable pulling tensions shall not exceed the maximum pulling tension recommended by the cable manufacturer. Medium voltage cable termination shall be suitable for the location installed and meet IEEE Std. 48 Class 1 requirements.

G401007 DUCTBANKS, MANHOLES, HANDHOLES, AND RACEWAYS

Concrete manholes and handholes shall be standard type pre-cast concrete. Composite/Fiberglass handholes shall be polymer concrete reinforced with a heavy weave fiberglass reinforcing as indicated. Load ratings of manholes and handholes shall be suitable for the location installed.

G401008 GROUNDING SYSTEMS

G401009 METERING

G401010 CATHODIC PROTECTION SYSTEMS

Cathodic protection systems shall be in accordance with UFC 3-570-02N.

G401011 EQUIPMENT REQUIREMENTS FOR COASTAL AND HIGH HUMIDITY AREAS

G4020 SITE LIGHTING

G402001 EXTERIOR LIGHTING FIXTURES AND CONTROLS

Maintained mean area lighting levels shall be 6 lux (0.5 fc). Lighting uniformity shall be maintained with the following average to minimum uniformity ratios:

a. Highway Lighting, 3:1
b. Secondary Street Lighting, 6:1
c. Residential Streets, 6:1
d. Area and Parking Lighting, 6:1

G402002 SPECIAL SECURITY LIGHTING SYSTEM

G402003 OTHER AREA LIGHTING

G402004 LIGHTING POLES

Poles shall meet Uniform Building Code for street lighting poles, and AASHTO loadings for highway and sports lighting poles taking into account the effective projected areas of the luminaries provided. Poles shall be direct set or anchor-base type designed for use with underground supply conductors.

G402005 UNDERGROUND ELECTRIC CONDUCTORS

Provide in accordance with Paragraph G401006.

G402006 DUCTBANKS, MANHOLES, AND HANDHOLES

Handholes and underground conduits for site lighting shall be in accordance with Paragraph G401007.

G402007 GROUNDING SYSTEMS

G4030 SITE COMMUNICATION AND SECURITY

G403001 TELECOMMUNICATIONS SYSTEMS

G403002 CABLE TV SYSTEMS (CATV)

G403003 CABLES AND WIRING

Provide underground copper cable pair in accordance with RUS 345-67. Provide aerial cable in accordance with RUS 345-67 except that it shall be suitable for aerial installation and shall be Figure 8 distribution wire with 6,000 pound (26,700 N) Class A galvanized steel or 6,000 pound (26,700 N) aluminum-clad steel strand. Screen-compartmental core cable shall be filled cable meeting the requirements of RUS 345-67. Fiber optic media shall meet all performance requirements of EIA/TIA-568-A and the physical requirements of ICEA S 87-640 and EIA/TIA-598-A.

G403004 DUCTBANKS, MANHOLES, AND HANDHOLES

Provide in accordance with paragraph G401007.

G403005 TOWERS, POLES, AND STANDS

Provide in accordance with paragraph G401005.

G403006 TV CAMERAS AND MONITORS

G403007 ELECTRONIC SECURITY SYSTEM (ESS)

G403008 OTHER COMMUNICATION AND ALARM

G403009 GROUNDING SYSTEMS

G4090 OTHER ELECTRICAL UTILITIES

--End of Section--

SECTION Z10

GENERAL PERFORMANCE TECHNICAL SPECIFICATION
03/10

Z10 GENERAL

Z10 1.1 NARRATIVE

All Performance Technical Specification (PTS) sections must be used in conjunction with all parts of the Design Build (D/B) Request for Proposal (RFP) to determine the full requirements of this solicitation. This PTS section provides general requirements for the other PTS sections of this RFP and is used in conjunction with the other PTS sections.

Refer to UFGS section 01 33 10.05 20, *Design Submittal Procedures* for the Order of Precedence of the RFP Parts. Requirements listed in the Project Program take precedence over the PTS sections requirements; therefore, requirements identified in the Project Program eliminate options related to that requirement in the PTS sections.

The PTS Sections are general in nature and not all items listed in the PTS sections will be required for this project. Refer to RFP Part 3 - Project Program, including the ESRs for project specific requirements.

Z10 1.2 DESIGN GUIDANCE

Provide work in compliance with the following design standards and codes, as a minimum. Government standards listed in this RFP take precedence over industry standards.

The PTS Sections reference published standards, the titles of which can be found in the *Unified Master Reference List (UMRL)*on the Whole Building Design Guide at the Unified Facilities Guide Specification (UFGS) Website . The publications referenced form a part of this specification to the extent referenced. The publications are referred to in the section text by the basic designation only. Industry standards, codes, and Government standards referenced in the section text, and not found in the UMRL, are listed at the beginning of the PTS sections.

The advisory provisions of all referenced codes, standards, and specifications shall be mandatory; substitute words such as "shall", "must", or "required" for words such as "should", "may", or "recommended," wherever they appear. The results of these wording substitutions incorporate these code and standard statements as requirements. Reference to the "authority having jurisdiction" shall be interpreted to mean "Contracting Officer". Comply with the required and advisory portions of the current edition of the standard at the time of contract award.

The following list of codes and standards is not comprehensive and is augmented by other codes and standards referenced and cross-referenced in the RFP.

Z10 1.2.1 INDUSTRY CODES

INTERNATIONAL BUILDING CODE (IBC) - with exceptions and additions noted in UFC 1-200-01

INTERNATIONAL MECHANICAL CODE (IMC)

INTERNATIONAL PLUMBING CODE (IPC)

NATIONAL FIRE CODES (NFC) - with exceptions and additions noted in UFC 1-200-01 and UFC 3-600-01

Z10 1.2.2 INDUSTRY REQUIREMENTS

WHOLE BUILDING DESIGN GUIDE (WBDG)

WHOLE BUILDING DESIGN GUIDE: Ensure Occupant Safety and Health (Systems Safety Engineering) at http://www.wbdg.org/design/ensure_health.php

Z10 1.2.3 GOVERNMENT STANDARDS

Z10 1.2.3.1 UNIFIED FACILITIES CRITERIA (UFC)

The UFCs required by this project are referenced in the contract documents or cross-referenced within referenced documents. The complete list of final UFC documents is located on the Whole Building Design Guide at http://www.wbdg.org/ccb/browse_cat.php?o=29&c=4. The following are significant UFCs available on the website above that are applicable to this project:

UFC 1-200-01, *General Building Requirements*

UFC 1-300-09N, *Design Procedures*

UFC 3-120-10, *Interior Design*

UFC 3-201-02, *Landscape Architecture*

UFC 3-220-01N, *Geotechnical Engineering Procedures for Foundation Design of Buildings and Structures*

UFC 3-301-01, *Structural Engineering*

UFC 3-400-01, *Energy Conservation*

UFC 3-420-01, *Plumbing Systems*

UFC 3-501-01, *Electrical Engineering*

UFC 3-560-01, *Electrical Safety; O&M*

UFC 3-580-10, *Design: Navy and Marine Corps Intranet (NMCI) Standard Construction Practices*

UFC 3-600-01, *Fire Protection Engineering for Facilities*

UFC 4-010-01, *DoD Minimum Antiterrorism Standards for Buildings* (This Antiterrorism Standard has wide ranging effect. Refer to Part 3 for examples of discipline related building components that are affected)

UFC 4-010-02, *DOD Minimum Standoff distances for Buildings* (For Official Use Only)

UFC 4-012-17, *Security Engineering: Design of Electronic Security Systems*

UFC 4-022-03, *Security Engineering: Design of Security Fencing, Gates, Barriers, and Guard Facilities*

UFC 4-023-03, *Design of Buildings to Resist Progressive Collapse*

OTHER NAVY-ONLY UNIFIED FACILITIES CRITERIA:

Other Navy-only UFCs are located in the DESIGN GUIDANCE TAB on the Navy Design-Build Request for Proposal Website at http://www.wbdg.org/ndbm/DesignGuid/DesignGuid.html?Tab=DesignGuid . The following are "Draft" Navy-only UFC documents that are applicable as final documents on this project:

UFC 3-100-10N, *Architecture*

UFC 3-200-10N, *Civil Engineering*

UFC 3-400-10N, *Mechanical Engineering*

UFC 3-600-10N, *Fire Protection Engineering*

UFC 3-800-10N, *Environmental Engineering for Facility Construction*

UFC 4-020-01, *DOD Security Engineering Facility Planning Manual*

UFC 4-021-02NF, *Security Engineering Design of Electronic Security Systems*

Z10 1.2.3.2 FEDERAL STANDARDS

Uniform Federal Accessibility Standard (UFAS)

American with Disabilities Act Architectural Guidelines (ADAAG)

Occupational Safety and Health Association (OSHA)

Z10 1.3 MATERIALS AND EQUIPMENT REQUIREMENTS IDENTIFICATION

Z10 1.3.1 MATERIALS STANDARD

Refer to the Project Program for identification of Government Furnished Equipment.

The equipment items shall be supported by service organizations that are convenient to the equipment installation in order to render satisfactory service to the equipment on a regular and emergency basis during the warranty period of the contract.

Materials, equipment, fixtures, and other appurtenances shall comply with applicable Underwriters Laboratories, (UL) Inc., American National Standards Institute, Inc., and National Electrical Manufacturer's Association standards or applicable standards of a similar independent testing organization. All materials shall be new, and shall bear the label of Underwriters Laboratories whenever standards have been established and label service is normally and regularly furnished by the agency. All equipment provided shall be listed and labeled suitable for the specified purpose, environment, and application and installed in accordance with manufacturer's recommendations. Insulation shall be asbestos free.

Z10 1.3.2 EQUIPMENT NAMEPLATE IDENTIFICATION

Each item of equipment shall have a nameplate bearing the manufacturer's name, address, model number, and serial number securely affixed in a conspicuous place. The nameplate of the distributing agent will not be acceptable.

Z10 1.3.3 FIELD-APPLIED NAMEPLATES

Provide laminated plastic nameplates for each piece of equipment. Each nameplate must identify the function and, when applicable, the number designation of that piece of equipment as used in the design documents. Provide melamine plastic nameplates, 0.125 inch (3 mm) thick, white with black center core.

Z10 1.4 COMMISSIONING

Commission the building systems identified in the Project Program paragraph 2.2.3. Refer to UFGS section 01 45 00.05 20, *Design and Construction Quality Control* for commissioning requirements. Test reports must be certified by the Commissioning Authority (CA), that work is in compliance with requirements of the RFP.

Z10 1.5 PERFORMANCE VERIFICATION AND ACCEPTANCE TESTS

Verification of satisfactory construction and system performance shall be via Performance Verification Testing, Acceptance Tests, and submittal of test reports certified by the Designer of Record (DOR), that work is in compliance with requirements of the RFP. The Government reserves the right to witness all Performance Verification and Acceptance Tests, review data, and request other such additional inspections and repeat tests as necessary to ensure that the work and provided services conform to the stated requirements. Contractor shall pay the cost of all testing.

Refer to each PTS section to identify Performance Verification and Acceptance Testing required by the work specified in that PTS section.

Z10 1.6 SUBMITTALS

Contractor's design submittals that combines design and construction submittals, must jointly comply with UFGS sections 01 33 00.05 20, *Construction Submittal Procedures* and 01 33 10.05 20, *Design Submittal Procedures*. Contractor's construction submittals that submitted separate from the design submittals must comply with UFGS 01 33 00.05 20, *Construction Submittal Procedures*.

Refer to "Construction Quality Control" in UFGS 01 33 00.05 20, *Construction Submittal Procedures* and 01 45 00.05 20, *Design and Construction Quality Control* to define reviewing and approving Authority of design and construction submittals.

Utilize the same materials and equipment that are approved and provided for an initial facility design, on all follow-on facilities that use the same design with-in this contract. Once the initial facility design is approved by the Government, the Contractor must obtain Government approval to change materials and equipment when designing and constructing follow-on facilities utilizing the same design.

Z10 1.6.1 DESIGN SUBMITTALS

Design submittals shall be in accordance with Unified Facility Guide Specification (UFGS) section 01 33 10.05 20, *Design Submittal Procedures*, UFC 1-300-09N, *Design Procedures*, and other discipline-specific guidelines listed in the applicable PTS sections.

Some PTS sections identify and utilize UFGS sections as a project requirement. When a PTS section requires the use of a UFGS section, the Designer of Record (DOR) shall edit these UFGS sections for the project and submit the edited specification as a part of the design submittal. These required UFGS sections may only be augmented by manufacturer's data and catalog cuts in the design submittal. The manufacturer’s data and catalog cuts can not take the place of these required specification sections in a combined design and construction submittal.

The DOR shall (1) prepare UFGS Specifications as part of the project specification, (2) delete only portions of the UFGS specification that are not applicable to the project, (3) edit only the bracketed choices that are within the UFGS specification text, (4) edit blank bracketed options to include requirements that exercise prudence and adherence to acceptable industry standards, and (5) comply with the directions, directives, and requirements of all UFGS Criteria Notes. The UFGS Criteria Notes are typically bordered on the top and bottom by a line of asterisks to highlight their location.

Z10 1.6.2 CONSTRUCTION SUBMITTALS

Submit for approval to the Designer of Record (DOR), construction submittals, product data, manufacturer's information, shop drawings, and test reports on all materials and systems installed in the project, unless the DOR designates submittal for QC approval. Refer to each PTS section for further construction submittal requirements relating to the work identified in that particular PTS section. Some PTS sections reference UFGS sections that will require more construction submittals for DOR approval than is stated above. Refer to Section 01 33 00.05 20 for the list of construction submittals reserved for Government Approval and Government Surveillance.

--End of Section--

THIS PAGE HAS BEEN INTENTIONALLY LEFT BLANK

PART 5

PRESCRIPTIVE TECHNICAL SPECIFICATIONS

THIS PAGE HAS BEEN INTENTIONALLY LEFT BLANK

TELECOMMUNICATIONS INFRASTRUCTURE STANDARDS
MARINE CORPS BASE CAMP LEJEUNE

SECTION 27 10 00

BUILDING TELECOMMUNICATIONS CABLING SYSTEM
07/10

PART 1 GENERAL

1.1 REFERENCES

The publications listed below form a part of this specification to the extent referenced. The publications are referred to within the text by the basic designation only.

ASTM INTERNATIONAL (ASTM)

ASTM D 709	(2001; R 2007) Laminated Thermosetting Materials
ASTM E 814	(2008b) Standard Test Method for Fire Tests of Through-Penetration Fire Stops

CONSUMER ELECTRONICS ASSOCIATION (CEA)

CEA-310-E	(2005) Racks, Panels, and Associated Equipment

INSTITUTE OF ELECTRICAL AND ELECTRONICS ENGINEERS (IEEE)

IEEE 100	(2000; Archived) The Authoritative Dictionary of IEEE Standards Terms

INSULATED CABLE ENGINEERS ASSOCIATION (ICEA)

ICEA S-90-661	(2006) Category 3, 5, & 5e Individually Unshielded Twisted Pair Indoor Cables for Use in General Purpose and LAN Communications Wiring Systems Technical Requirements

NATIONAL ELECTRICAL MANUFACTURERS ASSOCIATION (NEMA)

NEMA WC 63.1	(2005) Twisted Pair Premise Voice and Data Communications Cables

NATIONAL FIRE PROTECTION ASSOCIATION (NFPA)

NFPA 70	(2008; AMD 1 2008) National Electrical Code

TELECOMMUNICATIONS INDUSTRY ASSOCIATION (TIA)

TIA J-STD-607-A	(2002) Commercial Building Grounding (Earthing) and Bonding Requirements for Telecommunications
TIA-455-21-A	(1988) FOTP-21 - Mating Durability of

Fiber Optic Interconnecting Devices

TIA-492AAAA-B	(1998; R 2002) 62.5-um Core Diameter/125-um Cladding Diameter Class 1a Graded-Index Multimode Optical Fibers
TIA-526-14-A	(1998) OFSTP-14A Optical Power Loss Measurements of Installed Multimode Fiber Cable Plant
TIA-526-7	(2002; R 2008) Measurement of Optical Power Loss of Installed Single-Mode Fiber Cable Plant OFSTP-7
TIA-568-C.1	(2009) Commercial Building Telecommunications Cabling Standard
TIA-568-C.3	(2008e1) Optical Fiber Cabling Components Standard
TIA/EIA-568-B.2	(2001) Commercial Building Telecommunications Cabling Standard - Part 2: Balanced Twisted Pair Cabling Components
TIA/EIA-569-B	(2004; Supersedes TIA/EIA-569-A and its Addenda) Commercial Building Standards for Telecommunications Pathways and Spaces (ANSI/TIA/EIA-569-B)
TIA/EIA-606-A	(2002) Administration Standard for the Telecommunications Infrastructure

U.S. DEPARTMENT OF AGRICULTURE (USDA)

RUS Bull 345-83	(1979; Rev Oct 1982) Gas Tube Surge Arrestors (PE-80)

U.S. FEDERAL COMMUNICATIONS COMMISSION (FCC)

FCC Part 68	Connection of Terminal Equipment to the Telephone Network (47 CFR 68)

UNDERWRITERS LABORATORIES (UL)

UL 1286	(2008; R 2001 thru 2009) Standard for Office Furnishings
UL 1666	(2007) Standard for Test for Flame Propagation Height of Electrical and Optical-Fiber Cables Installed Vertically in Shafts
UL 1863	(2004; R 2008) Standard for Communication Circuit Accessories
UL 444	(2008; R 2008) Communications Cables
UL 467	(2007) Grounding and Bonding Equipment

UL 497	(2001; R 2001 thru 2009) Standard for Protectors for Paired Conductor Communication Circuits
UL 514C	(1996; R 1998 thru 2009) Standard for Nonmetallic Outlet Boxes, Flush-Device Boxes, and Covers
UL 969	(1995; R 1998 thru 2008) Standard for Marking and Labeling Systems

1.2 RELATED REQUIREMENTS

D-B Contractor prepared Section 26 20 00 INTERIOR DISTRIBUTION SYSTEM and Section 33 82 00 TELECOMMUNICATIONS, OUTSIDE PLANT, apply to this section with additions and modifications specified herein.

1.3 DEFINITIONS

Unless otherwise specified or indicated, electrical and electronics terms used in this specification shall be as defined in TIA-568-C.1, TIA/EIA-568-B.2, TIA-568-C.3, TIA/EIA-569-B, TIA/EIA-606-A and IEEE 100 and herein.

1.3.1 Main Distribution Frame (MDF)

A physical structure at a central location for terminating permanent backbone cables to interconnect with service provider (SP) equipment at the activity minimum point of presence. The MDF generally includes vendor specific components to support voice and data circuits, building surge protector assemblies, main cross connect blocks, equipment support frames, and fire rated plywood backboard (if MDF is wall mounted). Depending upon local site conditions, the MDF and BDF may be the same space.

1.3.2 Building Distribution Frame (BDF)

A structure with terminations for connecting backbone, campus, and horizontal cabling. The BDF generally includes a cross connect, equipment support frame or lockable terminal cabinet, cable supports, and fire rated plywood backboard. The BDF shall include building protector assemblies when used for campus backbone or SP cabling.

1.3.3 Intermediate Distribution Frame (IDF)

An intermediate termination point for horizontal wiring and cross-connections within telecommunications rooms. Shall be connected to MDF with both fiber and copper. Secure Internet Protocol (SIPR) vault or cabinet is considered an IDF.

1.3.4 Telecommunications Room (TR)

An enclosed space for telecommunications equipment, terminations, and cross-connect wiring for horizontal cabling, minimum size shall be 8' x 10' unless a local waiver is provided by the AHJ (authority having jurisdiction) which is Base Telephone. Telecommunications room could be much larger depending on building size and customer requirements. Telecommunications rooms should be centrally located unless multiple rooms are used. Access to Rooms shall be from a common area such as a hallway / open office space and the door should swing out. Additional/ Multiple

Telecommunications Rooms are required if the usable floor space to be served exceeds 10,000 square feet, or the cable length between the horizontal cross-connect and the telecommunications outlet, including slack, exceeds 295 feet (90m). Multiple telecommunications rooms will be connected by a minimum of two 75mm (3 inch) conduits. The minimum clear height in the room shall be 2.4 m (8 ft) without obstructions. The height between the finished floor and the lowest point of the ceiling should be a minimum of 3 m (10 ft) to accommodate taller frames and overhead pathways. The flooring shall be sealed concrete to reduce dust and static electricity; no carpet or tile. Two separate dedicated 20 amp electrical outlet will be installed for each communications equipment rack needed. Outlets should be installed on the same wall as the conduits or communications backboard. There should not be an electrical panel within the telecommunications room. The room requires a lockable door keyed or key padded to restrict access to Base telephone personnel only. At least one wall, where the point of presence is, should be covered with plywood backboard for mounting equipment; additional boards may be needed for mounting additional equipment (see BACKBOARDS below). Light, as measured within the telecommunications room, should be a minimum of 500 lx (50 foot-candles). Lighting design should seek to minimize shadows within the telecommunications room. Equipment not related to the support of the telecommunications room (e.g., piping, ductwork, pneumatic tubing) shall not be installed in, pass through, or enter the telecommunications room.

1.4 ENVIRONMENTAL REQUIREMENTS

Connecting hardware shall be rated for operation under ambient conditions of 0 to 60 degrees C (32 to 140 degrees F) and in the range of 0 to 95 percent relative humidity, non-condensing. Provide HVAC tied into building system or separate that will maintain continuous cooling environmental control (24 hours per day, 365 days per year). If emergency power is available, consider connecting it to the HVAC system.

1.5 SYSTEM DESCRIPTION

The structured telecommunications pathway system shall include permanently installed horizontal and backbone pathways, service entrance facilities, work area pathways, telecommunications outlet boxes, conduit, and raceway, and hardware for splicing, terminating, and interconnecting. The horizontal system includes the pathway between the telecommunications room and the work area telecommunications outlet. The horizontal system shall be suitable for star topology with the MDF/IDF at the center or hub of the star. The backbone pathway system includes intrabuilding and interbuilding interconnecting pathway to provide connectivity between the MDF's, BDF's, and IDF's. The backbone system shall be suitable for star topology with the MDF at the center or hub of the star.

1.6 SUBMITTALS

Government approval is required for submittals with a "G" designation; submittals not having a "G" designation are for Contractor Quality Control approval. The following shall be submitted in accordance with Section 01 33 00.05 20 CONSTRUCTION SUBMITTAL PROCEDURES and Section 01 33 10.05 20 DESIGN SUBMITTAL PROCEDURES:

SD-02 Shop Drawings

Telecommunications drawings; G

Distribution frames; G

In addition to Section 01 33 00.05 20 CONSTRUCTION SUBMITTAL PROCEDURES and Section 01 33 10.05 20 DESIGN SUBMITTAL PROCEDURES, provide shop drawings in accordance with paragraph SHOP DRAWINGS.

SD-03 Product Data

Telecommunications cabling (backbone and horizontal); G

Patch panels; G

Telecommunications outlet/connector assemblies; G

Equipment support frame; G

Building protector assemblies; G

Connector blocks; G

Protector modules; G

Submittals shall include the manufacturer's name, trade name, place of manufacture, and catalog model or number. Include performance and characteristic curves. Submittals shall also include applicable federal, military, industry, and technical society publication references. Should manufacturer's data require supplemental information for clarification, the supplemental information shall be submitted as specified in paragraph REGULATORY REQUIREMENTS and as required in Section 01 33 00.05 20 CONSTRUCTION SUBMITTAL PROCEDURES and Section 01 33 10.05 20 DESIGN SUBMITTAL PROCEDURES.

SD-06 Test Reports

Telecommunications cabling testing; G

Factory reel tests; G

Furnish factory reel tests for optical fiber cables.

SD-07 Certificates

Telecommunications Contractor Qualifications; G

Manufacturer Qualifications; G

Test plan; G

SD-10 Operation and Maintenance Data

Telecommunications cabling and pathway system Data Package 5; G

Submit operations and maintenance data in accordance with Section 01 78 24.05 20 FACILITY OPERATION AND MAINTENANCE SUPPORT INFORMATION and as specified herein.

1.7 ADDITIONAL SUBMITTAL REQUIREMENTS

All submittals of material, equipment and design must be approved by the Base Telephone Office prior to installing any telecommunications wiring and equipment.

1.7.1 Telecommunications Drawings

Provide **Registered Communications Distribution Designer (RCDD)** approved drawings complete with wiring diagrams and details required to prove that the distribution system shall properly support connectivity from the telecommunications equipment room to telecommunications work area outlets. Show the entrance facility and layout of cabling and pathway runs, cross connect points, MDF, BDF, IDF, grounding system, rack elevations, terminating block arrangements and type. Drawings shall depict final telecommunications cabling configuration, including location, color coding, gage, pair assignment, polarization, and terminating blocks layout at cross connect points and patch panels after telecommunications cable installation. Provide a plastic laminated schematic of the as-installed telecommuni-cations cable system showing cabling, MDF's, BDF's, IDF's, and equipment rooms keyed to floor plans by room number. Mount the laminated schematic in each telecommunications room as directed by Base Telephone. The Telecommunications Contractor shall receive design approval from the Base Telephone Officer prior to installation.

1.7.2 Distribution Frames

Provide shop drawing showing layout of applicable equipment including incoming cable stub or connector blocks, building protector assembly, outgoing cable connector blocks and equipment spaces and racks. (See example rack elevation Encl A Rack Elevation Specs and Encl B specs for backboard layout.)

1.7.3 Qualifications

1.7.3.1 Minimum Contractor Qualifications

Prior to installation, submit data of provider's experience and qualifications. All work under this section shall be performed by and all equipment shall be provided by a certified Telecommunications Contractor, hereinafter referred to as the Contractor. The Contractor shall have the following qualifications in Telecommunications Systems installation:

a. Contractor shall have a minimum of 3 years experience in the application, installation and testing of the specified systems and equipment to be installed.

b. All supervisors and installers assigned to the installation of this system or any of its components shall be Building Industry Consulting Services International (BICSI) Certified Cabling Installation Technicians, Installer Level 2, or have a minimum of 3 current consecutive years experience in the installation of the specified copper and fiber optic cable and components.

c. Contractor shall include names and locations of two projects successfully completed using optical fiber and copper communications cabling systems. Include specific experience in installing and testing structured telecommunications distribution systems using optical fiber and Category 5E/6 cabling systems. Include written correspondence from

users that systems have performed satisfactorily for not less than 18 months.

1.7.3.2 Minimum Manufacturer Qualifications

The equipment and hardware provided under this contract will be from manufacturers that have a minimum of 3 years experience in producing the types of systems and equipment specified.

1.7.4 Test Plan

Provide a complete and detailed test plan for the telecommunications cabling system including a complete list of test equipment for the UTP and optical fiber components and accessories 60 days prior to the proposed test date. Include procedures for certification, validation, and testing.

1.7.5 Additions to Operation and Maintenance Manuals

In addition to requirements of Data package 5 for the telecommunications cabling and pathway system, include the requirements of paragraph entitled "Telecommunications Drawings."

1.8 DELIVERY AND STORAGE

Provide protection from weather, moisture, extreme heat and cold, dirt, dust, and other contaminants for telecommunications cabling and equipment placed in storage.

PART 2 PRODUCTS

2.1 PATHWAYS (BACKBONE AND HORIZONTAL)

TIA/EIA-569-B. Pathway shall be conduit, cable tray, or access flooring. Under floor duct and wireway is not recommended. Provide grounding and bonding as required by TIA J-STD-607-A. Cable tray wiring shall comply with NFPA 70. All conduits entering the Telecommunications Room should be grouped and consolidated, conduits can be "Home Run" or stubbed to cable tray, all should have bonding bushing / plastic insert, and shall extend down from the ceiling 3 to 4 inches onto the backboard, and will be bonded to the TMGB or TGB by a minimum number 6 green sheathed stranded conductors. All penetrations will be sealed with firestopping material in accordance with the requirements of D-B Contractor prepared Section 07 84 00 FIRESTOPPING. A minimum of two 3 inch conduits will be installed between the Main Telecommunications Room and other communication rooms (IDFs).

2.1.1 Work Area Pathways

Comply with TIA/EIA-569-B, except 1-inch diameter conduit shall not be permitted. Minimum conduit size shall be 1-1/4 inches. System furniture pathways shall comply with UL 1286. Horizontal cabling for open offices shall comply with TIA-568-C.1.

2.1.2 Pull Boxes

Construct of galvanized sheet steel with screw-fastened covers. Minimum size of boxes shall be not less than 5-inches wide by 5-inches in length by 2 7/8-inches deep for individual 1-1/4-inch diameter conduit; minimum size of boxes shall be not less than 30"W x 54"L x9"D for 3" conduit, 42"W x 66"L x 11"D for 4" conduit per TIA/EIA-569-B, provide pull boxes where

length of conduit exceeds 100 feet or where there are more than two 90 degree bends, or equivalent. Align conduit ends on opposite sides of pull boxes as in a pull through, do not turn or change direction in pull boxes. Provide pull boxes in straight lengths of conduit; pull points, LC, LB, condulets are not authorized.

2.2 BENDS

Inside radius of conduit bend shall be a minimum of 6 times the internal diameter of conduit for conduits of 2 inches or less. Inside radius of conduit bend shall be a minimum of 10 times the internal diameter of conduit for conduits larger than 2 inches.

2.3 TELECOMMUNICATIONS OUTLET BOXES

Telecommunications outlet boxes should be placed in all work areas and any area that can be converted to work areas. Good practice is 6" to the left or right of every electrical outlet box in workable office areas or any area that could be converted into workable office area such as a storage closet; also any conference room should have one floor and one ceiling box. Boxes shall be standard type 5 inches square by 2 7/8 inches deep for CAT6 with 1-1/4-inch diameter side knock-outs, with a single gang plaster ring. Mount flush in finished walls at height indicated by drawings. Outlet boxes for wall-mounted telephones shall be 2 by 4 by 2 1/8 inches deep with 1 CAT6 cable terminated in a standard wall phone plate; mounted at 54 inches above finished floor. Outlet boxes for handicapped telephone station or work counter area shall be mounted at a height 48 inches above finished floor. Outlet boxes installed in floor for classrooms or open spaces shall be telecommunications floor boxes large enough to support a surge of users with proper cable protection and ports that are not parallel to the floor. Floor boxes and under slab cabling should not be used on the first floor in wet areas. Tele electric poles or furniture managed pathways fed from above the wet area should be used. Multi-user Telecommunications Outlet Assembly i.e. Multimedia Outlet Assemblies (MUTOA) should be placed where best suited for the furniture used in open office spaces.

2.3.1 Telecommunications Cabling

Cabling shall be UL listed for the application and shall comply with TIA-568-C.1, TIA/EIA-568-B.2, TIA-568-C.3 and NFPA 70. Provide a labeling system in accordance with the manufacturer and local AHJ guidance for cabling as required by TIA/EIA-606-A and UL 969. Cable specifications must be provided in submittal and approved by base telephone before installation. Cabling manufactured more than 12 months prior to date of installation shall not be used.

2.3.1.1 Backbone Copper

ICEA S-90-661, TIA-568-C.1, TIA/EIA-568-B.2 and UL 444, copper backbone cable shall be solid conductor, 24 AWG, 100 ohm, CAT3/5, XX-pair UTP (Unshielded twisted pair); NFPA 70 CMR rated formed into 25 pair binder groups covered with a thermoplastic jacket. NFPA 70 type CMP may be substituted for type CMR. Pair twist-lengths and frequency per unit length shall be determined by the manufacturer. A minimum of two conductor twists per foot is required. Color coding shall comply with industry standards for 25 pair cables. Sufficient pair count CAT 3/5 riser (25, 50, 100,..) and two 4 pair 24 AWG Category 6 riser (CMR) rated cable will be installed between the MDF and each of the IDF's. Voice Riser shall be terminated on

suitable Insulation Displacement Contact cross connect blocks and two CAT6 in the patch panels last position. Any Backbone Copper run in under slab conduit shall be rated for outdoor use in accordance with AHJ.

2.3.1.2 Backbone Optical Fiber Between Closets

TIA-492AAAA-B, TIA-568-C.3, UL 1666, NFPA 70. Optical fiber cable shall be 24-fiber multimode 62.5/125-um and 24-fiber single mode 8/125-um, terminated on ST type connectors, with a non-conductive optical fiber riser cable (OFNR) rating. Nonconductive optical fiber Plenum (OFNP) cable may be substituted for type nonconductive optical fiber riser cable (OFNR). The cable jacket shall be orange and yellow. Terminate in a rack mounted fiber distribution center (approved by AHJ) with sufficient slack for maintenance operations (usually 36"). Fiber should be run to each IDF from the MDF.

2.3.2 Horizontal Cabling

Comply with NFPA 70, NEMA WC 63.1, ICEA S-90-661 and performance characteristics in TIA-568-C.1.

2.3.2.1 Horizontal Copper

TIA/EIA-568-B.2, NFPA 70, UTP (unshielded twisted pair), 100 ohm. Provide a minimum of four cables to each work area outlet, each individually twisted pair, 24 AWG conductors, Category 6 general purpose cable, with white or gray PVC jacket for all odd numbered jacks, and blue PVC jacket for all even numbered jacks (unclassified service). Plenum (CMP) or riser (CMR) cable may be substituted for general purpose cable. If the cabling passes thru a plenum air space then plenum (CMP) rated cable is required. If the cabling is run in under slab conduit, outdoor rated cable shall be used. Contact AHJ for special requirements on classified service, under slab cabling, using water block, and any item not covered in this document.

2.3.2.2 Horizontal Optical Fiber

TIA-492AAAA-B, TIA-568-C.3, NFPA 70. Optical fiber cable shall be 62.5/125-um, 2-fiber multimode, rated nonconductive optical fiber cable (OFN). Plenum (OFNP) or riser (OFNR) cable may be substituted for general purpose cable. The cable jacket shall be orange and be of single jacket construction. If the cabling passes thru a plenum air space then plenum (CMP) rated cable is required. Currently Camp Lejeune does not install any Horizontal Optical Fiber.

2.4 DISTRIBUTION FRAMES

Provide building distribution frames (BDF's), intermediate distribution frames (IDF's), and main distribution frames (MDF's) as shown on design drawings for terminating and cross connecting permanent cabling.

2.4.1 Equipment Support Frame

CEA-310-E.

a. Bracket, wall mounted (for buildings with very low jack/pair count and no secured equipment requirement), 8 gauge aluminum. Provide hinged bracket compatible with 482.6 mm panel mounting. (Not preferred by AHJ.)

b. Rack, wall mounted (for buildings with low jack count), 16 gauge steel construction treated to resist corrosion. Recommend CPI 15320-724 or equivalent approved by AHJ. Must be in secured Telephone room.

c. Racks, floor mounted modular type, 16 gauge steel construction treated to resist corrosion. Recommend SIEMON's RS3-07-S or equivalent approved by AHJ. Provide rack with vertical and horizontal cable management channels, top cable troughs and grounding lug. Racks should be large enough to support all telephone / data equipment required plus 25 percent spare. Rack shall be compatible with 482.6 mm panel mounting.

d. Cabinets should be used in areas that are not secured. Cabinets shall be no smaller than 24"W X 48"H X 30"D but can be as large as 7'H X 24"W X 30"D. All cabinets should be lockable and large enough to support all telephone / data equipment required in the building plus 25 percent spare. Recommend CPI or equivalent approved by AHJ. Dedicated electrical outlets should be installed within the cabinet. A backboard for mounting equipment is still needed when a cabinet is installed (see paragraph "BACKBOARDS" below).

2.4.2 Building Protector Assemblies

Building protector assembly shall have 710 type connector blocks for connection to the exterior cable at full capacity. M150-66 type IDC for connection to the voice cross connect blocks. 110 type is not approved.

2.4.2.1 Protector Modules

UL 497, RUS Bull 345-83, three-electrode gas tube or solid state type rated for the application. Provide the number of surge protection modules equal to the number of pairs of exterior cable of the building protector assembly.

2.4.3 Connector Blocks

Insulation displacement type, recommend Krone blocks' 6652-1-880-10 or equivalent approved by AHJ, for Category 5 and higher systems. Provide blocks for the number of backbone cables terminated on the block plus 25 percent spare. Also provide sufficient blocks for cross connects for all IDFs.

2.4.4 Patch Panels

Provide ports for the number of horizontal cables terminated on the panel plus 25 percent spare within the top 2/3 of the equipment support frame (bottom 1/3 is reserved for DATA equipment). Provide pre-connectorized ST type Optical fiber and copper patch cords for patch panels. Provide patch cords with connectors specified by AHJ. Patch cords shall meet minimum performance requirements specified in TIA-568-C.1, TIA/EIA-568-B.2, TIA-568-C.3 for cables and hardware specified.

2.4.4.1 Modular to Patch Panel

TIA-568-C.1, TIA/EIA-568-B.2, TIA-568-C.3. Panels shall be third party verified and shall comply with EIA/TIA Category 6 requirements. Panel shall be constructed of 2.2 mm minimum aluminum and shall be compatible with an EIA 482.6 mm equipment rack. Panel shall provide ## non-keyed, RJ-45 ports. Recommend SIEMONS type CT patch panels, CT-PNL-XX or equivalent approved by AHJ. Patch panels shall terminate the building

cabling on 110-style insulation displacement connectors and shall utilize a printed circuit board interface, Recommend Siemon's CT Couplers, CT-F-C6-C6-XX or equivalent approved by AHJ. The rear of each panel shall have incoming cable strain-relief, routing guides, or rear cable management; DO NOT USE ZIP TIES. Panels shall have each port numbered with manufacturer's labels and be equipped with laminated plastic cover plates above each port.

2.4.4.2 Special Network Requirements

Buildings with Special Networks Requirements such as Secured Internet Protocol, MCCS.org, and Naval Blue Network may require additional guidance outside this specification. Secured areas or secured networks in non secured areas may require Protected Distribution System which is also outside this specification. In these cases contact Base Telephone for Guidance at (910) 451-9439 or (910) 451-4760.

2.5 TELECOMMUNICATIONS OUTLET BOXES

Standard type 5" x 5" x 2 7/8" square box with a single gang plaster ring. Mount flush in finished walls at height indicated by drawings. Depth of boxes shall be large enough to allow manufacturer's recommended conductor bend radii normally 2 7/8".

2.6 TELECOMMUNICATIONS OUTLET/CONNECTOR ASSEMBLIES

2.6.1 Outlet/Connector Copper

Outlet/connectors shall comply with FCC Part 68.5, TIA-568-C.1, and TIA/EIA-568-B.2. UTP Outlet/connectors shall be UL 1863 listed, non-keyed, 4-pair, constructed of high impact rated thermoplastic housing and shall be third party verified and shall comply with EIA/TIA Category 6 requirements. Recommend SIEMON's CT couplers, CT-F-C6-C6-xx or equivalent approved by AHJ, of indicated color (normally ivory or white). Outlet/connectors provided for Category 6 UTP cabling shall meet or exceed the requirements for the cable provided. Outlet/connectors shall be terminated using a 110-style PC board connector, color-coded for both T568A and T568B wiring. Each jack shall be wired **T568A**. UTP outlet/connectors shall comply with TIA-455-21-A for 750 mating cycles.

2.6.2 Cover Plates

Telecommunications cover plates shall comply with UL 514C, and TIA-568-C.1, TIA/EIA-568-B.2, TIA-568-C.3; flush or oversized design constructed of high impact thermoplastic. Recommend SIEMON's CT4-FP-xx or equivalent approved by AHJ, of indicated color (normally ivory or white), factory labeled and numbering shall be equipped with laminated plastic cover.

2.6.3 Optical Fiber Distribution Panel

Rack mounted optical fiber distribution panel (OFDP) shall be constructed of 2.2 mm minimum anodized aluminum. Panel shall be divided into two sections, distribution and user. Distribution section shall have strain relief, routing guides for sufficient slack, and user section shall have a cover for patch cord protection. Each distribution panel shall provide 6 or 12 ST adapters. Adapters shall utilize metallic alignment sleeves. Provide dust covers for all adapters. Recommend Corning PCH or equivalent approved by AHJ.

2.7 BACKBOARDS

Provide void-free, interior grade plywood 19 mm (3/4 inch) thick as indicated. Backboards shall be fire rated, with the fire stamp visible, or covered with two coats of gray or a lighter color, nonconductive, fire-retardant paint, on all sides. Boards should be installed 4'Width x 8'Height and cover at least an 8' x 8' area on the wall with the communications conduit in the telecomm room. Additional boards may be needed anywhere equipment is to be mounted. (See Encl B specs for backboard layout.)

2.8 GROUNDING AND BONDING PRODUCTS

Comply with UL 467, TIA J-STD-607-A, and NFPA 70. Components shall be identified as required by TIA/EIA-606-A. Ground rods shall be in accordance with D-B Contractor prepared Section 26 20 00 INTERIOR DISTRIBUTION SYSTEMS. The preferred ground for the Telephone Main Grounding Bus (TMGB) bar will be to the Main electrical Distribution Panel (MDP) bus bar and building steel. In most cases; a #6 AWG bonding conductor is recommended for telecommunications. All grounding and bonding conductors within the Telecommunications room will be green sheathed copper conductor, stranded, and labeled as suitable for use as such and tagged **"DO NOT REMOVE"**. All grounding and bonding conductors running outside of the Telecommunications room should be protected in conduit and sized according to references. The minimum size of the TMGB shall be no smaller than 4" by 10" by 1/4 inch thick; bus bar should be factory made and factory drilled - not fabricated or drilled onsite. All bonding and grounding terminations shall be irreversible and secured with a double hole crimp termination. Do not exceed minimum bend radius on bonding and grounding conductors.

2.9 FIRESTOPPING MATERIAL

Provide in accordance with D-B Contractor prepared Section 07 84 00 FIRESTOPPING. Provide asbestos-free fire stopping system capable of maintaining an effective barrier against flame and gases. System shall be UL listed and comply with ASTM E 814. Include UL system number UL listed print from manufacturer for each type of floor, wall, and ceiling penetration.

2.10 MANUFACTURER'S NAMEPLATE

Each item of equipment shall have a nameplate bearing the manufacturer's name, address, model number, and serial number securely affixed in a conspicuous place; the nameplate of the distributing agent will not be acceptable.

2.11 FIELD FABRICATED NAMEPLATES

ASTM D 709. Provide nameplates for equipment rooms and telecommunications rooms doors in accordance with schedule provided on drawings; Telephone rooms should not be labeled NMCI. Provide laminated plastic nameplates for each equipment enclosure, relay, switch, and device; as specified or as indicated on the drawings. Each nameplate inscription shall identify the function and, when applicable, the position. Nameplates shall be melamine plastic, 0.125 inch thick, white with black center core. Surface shall be matte finish. Corners shall be square. Accurately align lettering and engrave into the core. Minimum size of nameplates shall be one by 2.5 inches. Lettering shall be a minimum of 0.25 inch high normal block style.

PART 3 EXECUTION

3.1 INSTALLATION

Telecommunications pathway systems, including the horizontal and backbone pathway systems, telecommunications outlet/connector assemblies, and associated hardware shall be installed in accordance with TIA-568-C.1, TIA/EIA-568-B.2, TIA-568-C.3, TIA/EIA-569-B, NFPA 70, manufacturer instructions, current industry best practices, UL standards as applicable, and approval of the AHJ (authority having jurisdiction - Base Telephone). Metal raceway bases, covers, and dividers shall be bonded and grounded in accordance with TIA J-STD-607-A. Pathways shall be installed in accordance with the following minimum clearance distances of 1.2 meters(4 feet) from motors, generators, frequency converters, transformers, x-ray equipment or uninterruptible power system, 300 mm (12 in) from power conduits and cable systems, 125 mm (5 inches) from fluorescent or high frequency lighting system fixtures.

3.1.1 Cabling

Install Category 6 UTP and optical fiber telecommunications cabling and pathway system as detailed in TIA-568-C.1, TIA/EIA-568-B.2, and TIA-568-C.3. Screw terminals shall not be used. Use an approved insulation displacement connection (IDC) tool kit for copper cable terminations. Do not untwist Category 6 UTP cables more than 1/2 inch (12 mm) from the point of termination to maintain cable geometry. Provide service loop on each end of the cable, 10 feet (3 meters) in the telecommunications room, 6" (150mm) in or close to the work area outlet for UTP. Do not exceed manufacturers' cable pull tensions for copper cables. Provide a device to monitor cable pull tensions. Do not exceed 110 Newton pull tension for four pair copper cables. Do not chafe or damage outer jacket materials. Use only lubricants approved by cable manufacturer. Do not over cinch cables, or crush cables with staples. Only Velcro type cable straps are allowed on Category 6 cable and optical fiber cable. **DO NOT USE ZIP TIES.** UTP cable bend radii shall not be less than four times the cable diameter.

3.1.1.1 Backbone Cable

a. Copper Backbone Cable. Install backbone copper cable in 3" conduit pathways between MDF, BDF, and IDF equipment as indicated in this spec and on drawings. All under slab cables shall be rated for outdoor use.

b. Optical fiber Backbone Cable. Install backbone optical fiber in one of three 1" inter ducts inside 3" conduit pathways between MDF, BDF, and IDF equipment as indicated in this spec and on drawings. Do not exceed manufacturer's recommended bending radii and pull tension. Prepare cable for pulling by cutting outer jacket 10" (250 mm) leaving strength members exposed for approximately 10" (250 mm). Twist strength members together and attach to pulling eye. Vertical cable support intervals shall be in accordance with Manufacturer's recommendations.

3.1.1.2 Horizontal Cabling

Install horizontal cabling in an approved pathway as indicated in this specification and on drawings between MDF, BDF, IDF, and telecommunications outlet assemblies at workstations. All under slab cables shall be rated for outdoor use.

3.1.2 Pathway Installations

Comply with TIA/EIA-569-B, except provide 1-1/4 inch (32 mm) diameter conduit to each work area outlet from cable tray or telecommunication room backboard. Conceal conduit within finished walls, ceilings, and floors (not in wet areas). Keep conduit minimum 305 mm (12 inches) away from parallel runs of electrical power equipment, flues, steam, light ballast, and hot water pipes. Install conduit parallel with or at right angles to ceilings, walls, and structural members where located above accessible ceilings and where conduit is visible after completion of project. Run conduits in crawl spaces as if exposed. Install no more than two 90 degree bends for a single horizontal cable run. All bends/turns in conduits will be in straight runs of conduit; a pull box shall be installed after every 180 degrees of bends or 100'; in no case will a turn be made within a pull box. The minimum size for a pull box for a single 1 1/4" conduit will be 5" long by 5" wide by 2 7/8" deep, and for a 3" conduit 30"W x 54"L x9"D. All conduits should contain a bushing at the end to protect the cable from damage and required bonding. Pull points, LC, LB, condulets are not authorized.

3.1.2.1 Under Floor Duct Pathway Systems

Under floor cabling and under floor duct are not recommended by the AHJ in wet areas. If approved by AHJ they should be installed in accordance with manufacturers' recommendations. Use CMP in plenum spaces and CMX or water block cable designed for outdoor applications in wet areas.

3.1.2.2 Conduit Installed Under Floor Slabs

Conduit under floor slabs should be avoided in the Greater Camp Lejeune area due to wet area close to coastal waters. If under slab is approved by AHJ; conduit shall be located a minimum of 300 mm (12 inches) below the vapor barrier. Seal all conduit connections and at penetrations through vapor barrier. Use a water block cable designed for outdoor applications.

3.1.3 Service Entrance Conduit, Overhead

Galvanized rigid steel or IMC from service entrance to service entrance fitting or weather head outside of building. Ensure entrance fitting or weather head is sized to ensure minimum bend radius for largest cable is maintained.

3.1.4 Service Entrance Conduit, Underground

PVC Type EPC-40, galvanized rigid steel, or steel IMC. Underground portion shall be encased in minimum of 75 mm (3 inches) of concrete extending from the building entrance to 1500 mm (5 feet) out from the building footer or walkway and shall be a minimum of 450 mm (18 inches) below slab or grade. Mark the end with a durable marking source so it can be tied to the Outside Plant distribution.

3.1.5 Cable Tray Installation

Install cable tray components in accordance with TIA/EIA-569-B and manufacturer's instructions. Ensure proper bonding as required by TIA J-STD-607-A. Only CMP and OFNP type cable shall be installed in a plenum space. Recommend a continuous bonding conductor be run in the tray tapped to each section to ensure bonding.

3.1.6 Work Area Outlets

All work areas will contain a minimum of two face plates. Any work area larger than 80 sq feet will require additional face plates to service any work location in the room within 6 feet of a faceplate. This also applies to any area that could be converted to work space in the future. Recommend a Telecommunications outlet box be placed 6" to the left or right of every electrical outlet box in workable office areas or any area that could be converted into workable office area such as a storage closet. All work area faceplates will contain four category 6 jacks unless otherwise approved by AHJ.

3.1.6.1 Terminations

Terminate UTP cable in accordance with TIA-568-C.1, TIA/EIA-568-B.2, TIA-568-C.3 and wiring configuration as specified, **T568A**.

3.1.6.2 Faceplates

As a minimum, each jack shall have manufacturer labels numbered and be equipped with laminated plastic cover over the label. Also it shall be labeled as to its function with a blue computer icon on all even ports and a red phone icon on all the odd ports. (For secured networks contact AHJ.)

3.1.6.3 Cables

Unshielded twisted pair shall have a minimum of 152 mm (6 inch) slack cable loosely coiled into the telecommunications outlet boxes. Minimum manufacturer's bend radius for each type of cable shall not be exceeded. All telecommunications outlet boxes should have 4 cables to a double gang box if wiring is included in contract (no rough in or future use allowed).

3.1.6.4 Pull Cords

Pull cords shall be installed in all conduit serving telecommunications outlets if wiring is not included in contract, label each end.

3.1.7 Telecommunications Room Termination

Install termination hardware required for Category 6 and optical fiber system. A **single punch** insulation displacement tool shall be used for terminating copper cable to insulation displacement connectors (no multi punch tools).

3.1.7.1 Equipment Support Frames

Install in accordance with TIA/EIA-569-B:

a. Bracket / lockable cabinet, wall mounted, approved by base telephone. Mount to plywood backboard per manufacturer's recommendations. Mount so height of highest panel does not exceed 1980 mm (76 inches) above floor. Mount so there is sufficient space remaining on backboard to mount lightning protection, bonding, and cable managers, or install additional backboard.

b. Racks / lockable cabinet, floor mounted modular type, recommend SIEMON's RS3-07-S / CPI T1030-712 or equivalent approved by AHJ. Permanently anchor rack to the floor per manufacturer's recommendations. Mount so there is sufficient space remaining on

backboard to mount lightning protection, bonding, and cable managers, or install additional backboard. Install sections of ladder rack anchored to telephone rack/cabinet and at least two walls.

3.1.8 Electrical Penetrations

Seal openings around electrical penetrations through fire resistance-rated wall, partitions, floors, or ceilings as specified in D-B Contractor prepared Section 07 84 00, FIRESTOPPING.

3.1.9 Grounding and Bonding

Will be conducted in accordance with TIA J-STD-607-A, and NFPA 70 except only two hole compression lugs will be accepted.

3.1.10 Firestopping

Seal openings around raceway penetrations through fire resistance rated walls, partitions, floors and ceiling utilizing proper firestopping materials to maintain fire resistive integrity in accordance with D-B Contractor prepared Section 07 84 00 FIRESTOPPING.

3.2 LABELING

3.2.1 Labels

All labels shall be in accordance with TIA/EIA-606-A; except jacks will be numbered in a logical, sequential, clockwise numbering system from 1 to X with a closet designator. Example would be 145 C 146, would be the 145th & 146th jacks from the C comm. room. All labels shall be numbered with manufacturers labeling system (not fabricated or P-touch) and be equipped with laminated plastic cover. All terminations that are not to work area outlets should be in the last patch panel locations and labeled accordingly, i.e. DDC, FACP, Elevator, Wall phones.

3.2.2 Cable

All cables shall be labeled using color labels on both ends with encoded identifiers per TIA/EIA-606-A and AHJ.

3.2.3 Termination Hardware

All workstation outlets and patch panel connections shall be labeled using manufacturer labeling system, workstation outlets also may have color coded labels and icons with encoded identifiers as per TIA/EIA-606-A and AHJ.

3.3 TESTING

3.3.1 Telecommunications Cabling Testing

Perform telecommunications cabling inspection, verification, and performance tests in accordance with TIA-568-C.1, TIA/EIA-568-B.2, and TIA-568-C.3 and AHJ.

3.3.1.1 Inspection

Visually inspect cabling jacket materials for UL or third party certification markings. Visually inspect UTP and optical fiber jacket materials for UL or third party certification markings. Inspect cabling

terminations in telecommunications rooms and at workstations to confirm color code for tip and ring pin assignments, and inspect cabling connections to confirm compliance with TIA-568-C.1, TIA/EIA-568-B.2, and TIA-568-C.3. Visually confirm Category 6 marking of outlets, wallplates, outlet/ connectors, cables, and patch panels.

3.3.1.2 Verification Tests

UTP backbone copper cabling shall be tested for DC loop resistance, shorts, opens, intermittent faults, and polarity between conductors, and between conductors and shield, if cable has overall shield. Test operation of shorting bars in connection blocks. Test cables after termination but not cross connected. Perform 100 MHz near-end-cross-talk (NEXT) and attenuation tests for Category 6 systems installations.

Perform optical fiber end to end attenuation tests using a power meter and light source and optical time domain reflectometer (OTDR) and manufacturer's recommended test procedures. Perform tests in accordance with TIA-526-14-A, Method B for horizontal, multimode optical fiber and TIA-526-7, Method B for backbone, single mode optical fiber. Perform verification acceptance tests and factory reel tests.

3.3.1.3 Performance Tests

a. Category 6 Links. Perform UTP **permanent link** tests in accordance with TIA-568-C.1, TIA/EIA-568-B.2, TIA-568-C.3. Tests shall include wire map, length, attenuation, NEXT, and propagation delay. A channel test is not acceptable.

b. Optical Fiber Links. Perform optical fiber end-to-end attenuation tests and reel tests at jobsite.

c. As built drawings (not hand written, AutoCAD preferred) showing all telecommunications outlets and their numbers.

3.3.1.4 Final Verification Tests

Perform verification tests for UTP and optical fiber systems after the complete telecommunications cabling and workstation outlet/connectors are installed. Provide summary in .pdf and detailed test results in tester format .flw, as built drawings in .pdf and .dwg, and fiber power meter/OTDR reports on a CD/CDRW to base telephone office. All Test reports should have a building or project number on it. The final QC and certification of installation will be performed by Base Telephone after the contractor has provided passing and acceptable results on all test and As Built drawings showing all telecommunications outlets and their numbers. Test results that are a marginal may not be accepted. Also Fiber tests that pass the link budget but exceed tolerance on any connector or splice are considered a failure. All discrepancies shall be repaired and retested.

3.3.1.5 Records

a. Records to be provided for copper shall include the cable specification sheets from the manufacturer, the cable routing and locations, all splice point locations, patch panel and jack locations, cable length, cable reel numbers and installation location, building or project number. The test results shall be submitted in an electronic version on a CD/CDRW (do not e-mail).

b. Records to be provided for fiber shall include the cable specification sheets from the manufacturer, the cable routing and locations, all splice point locations, patch panel and jack locations, cable length, cable reel numbers and installation location, building or project number. The test results shall be submitted in an electronic version on a CD/CDRW (do not e-mail).

c. As built drawings showing all telecommunications outlets and their numbers, Rack Elevations, communication room locations, building or project number, and pathways should be submitted in an electronic version on a CD/CDRW (do not e-mail) and a hard copy should be posted in the communication room.

3.4 SCHEDULE

Some metric measurements in this section are based on mathematical conversion of inch-pound measurements, and not on metric measurement commonly agreed to by the manufacturers or other parties. The inch-pound and metric measurements are as follows:

PRODUCTS	INCH-POUND	METRIC
Outlet Boxes		
1. Standard		
- Length/width	5 inches (square)	127 mm (square)
- Depth	2 1/8 inches	55 mm
2. Telephone Outlet		
- Length	4 inches	100 mm
- Width	2 inches	50 mm
- Depth	2 1/8 inches	55 mm
- Depth	1 1/2 inches	38 mm

-- End of Section --

TELECOMMUNICATIONS INFRASTRUCTURE STANDARDS
MARINE CORPS BASE CAMP LEJEUNE

SECTION 33 82 00

TELECOMMUNICATIONS OUTSIDE PLANT (OSP)
07/10

PART 1 GENERAL

1.1 REFERENCES

The publications listed below form a part of this specification to the extent referenced. The publications are referred to in the text by the basic designation only.

ASTM INTERNATIONAL (ASTM)

ASTM B 1	(2001; R 2007) Standard Specification for Hard-Drawn Copper Wire
ASTM B 8	(2004) Standard Specification for Concentric-Lay-Stranded Copper Conductors, Hard, Medium-Hard, or Soft
ASTM D 1557	(2009) Standard Test Methods for Laboratory Compaction Characteristics of Soil Using Modified Effort (56,000 ft-lbf/ft3) (2700 kN-m/m3)
ASTM D 709	(2001; R 2007) Laminated Thermosetting Materials

INSTITUTE OF ELECTRICAL AND ELECTRONICS ENGINEERS (IEEE)

IEEE C2	(2007; TIA 2007-1; TIA 2007-2; TIA 2007-3; TIA 2007-4; TIA 2007-5) National Electrical Safety Code
IEEE 100	(2000) The Authoritave Dictionary of IEEE Standards Terms

INSULATED CABLE ENGINEERS ASSOCIATION (ICEA)

ICEA S-87-640	(2006) Optical Fiber Outside Plant Communications Cable
ICEA S-98-688	(2006) Broadband Twisted Pair, Aircore, Polyolefin Insulated, Copper Conductors Technical Requirements
ICEA S-99-689	(2006) Broadband Twisted Pair Cable Filled, Polyolefin Insulated, Copper Conductors Technical Requirements

NATIONAL ELECTRICAL MANUFACTURERS ASSOCIATION (NEMA)

ANSI C62.61	(1993) American National Standard for Gas

	Tube Surge Arresters on Wire Line Telephone Circuits

NATIONAL FIRE PROTECTION ASSOCIATION (NFPA)

NFPA 70	(2008; AMD 1 2008) National Electrical Code

TELECOMMUNICATIONS INDUSTRY ASSOCIATION (TIA)

TIA J-STD-607-A	(2002) Commercial Building Grounding (Earthing) and Bonding Requirements for Telecommunications
TIA-455-107A	(1999) Component Reflectance or Link/System Return Loss using a Loss Test Set
TIA TIA/EIA-455-204	(2000) FOTP-204 Measurement of Bandwidth on Multimode Fiber
TIA-455-46A	(1990) FOTP-46 Spectral Attenuation Measurement for Long-Length, Graded-Index Optical Fibers
TIA-455-78	(2002B) FOTP-78 Optical Fibres - Part 1-40: Measurement Methods and Test Procedures - Attenuation
TIA-472D000-A	(1993) Fiber Optic Communications Cable for Outside Plant Use
TIA-492CAAA	(1998; R 2002) Class IVA Dispersion-Unshifted Single-Mode Optical Fibers
TIA-492E000	(1996; R 2002) Class IVd Nonzero-Dispersion Single-Mode Optical Fibers for the 1550 nm Window (ANSI/TIA/EIA-492E000)
TIA-526-14-A	(1998) OFSTP-14A Optical Power Loss Measurements of Installed Multimode Fiber Cable Plant
TIA-526-7	(2002; R 2008) Measurement of Optical Power Loss of Installed Single-Mode Fiber Cable Plant OFSTP-7
TIA-568-C.1	(2009) Commercial Building Telecommunications Cabling Standard
TIA-568-C.3	(2008e1) Optical Fiber Cabling Components Standard
TIA-590-A	(1997) Standard for Physical Location and Protection of Below Ground Fiber Optic Cable Plant
TIA-758-A	(2004) Customer-Owned Outside Plant

	Telecommunications Cabling Standard
TIA/EIA-455-B	(1998) Standard Test Procedure for Fiber Optic Fibers, Cables, Transducers, Sensors, Connecting and Terminating Devices, and other Fiber Optic Components
TIA/EIA-568-B.2	(2001) Commercial Building Telecommunications Cabling Standard - Part 2: Balanced Twisted Pair Cabling Components
TIA/EIA-569-B	(2004; Supercedes TIA/EIA-569-A and its Addenda) Commercial Building Standards for Telecommunications Pathways and Spaces (ANSI/TIA/EIA-569-B)
TIA/EIA-598-B	(2001) Optical Fiber Cable Color Coding
TIA/EIA-606-A	(2002) Administration Standard for the Telecommunications Infrastructure

THE SOCIETY FOR PROTECTIVE COATINGS (SSPC)

SSPC SP 6/NACE No.3	(2007) Commercial Blast Cleaning

U.S. DEPARTMENT OF AGRICULTURE (USDA)

RUS 1755	Telecommunications Standards and Specifications for Materials, Equipment and Construction
RUS Bull 1751F-630	(1996) Design of Aerial Plant
RUS Bull 1751F-640	(1995) Design of Buried Plant, Physical Considerations
RUS Bull 1751F-643	(2002) Underground Plant Design
RUS Bull 1751F-815	(1979) Electrical Protection of Outside Plant
RUS Bull 1753F-201	(1997) Acceptance Tests of Telecommunications Plant (PC-4)
RUS Bull 1753F-401	(1995) Splicing Copper and Fiber Optic Cables (PC-2)
RUS Bull 345-50	(1979) Trunk Carrier Systems (PE-60)
RUS Bull 345-65	(1985) Shield Bonding Connectors (PE-65)
RUS Bull 345-72	(1985) Filled Splice Closures (PE-74)
RUS Bull 345-83	(1979; Rev Oct 1982) Gas Tube Surge Arrestors (PE-80)

UNDERWRITERS LABORATORIES (UL)

UL 497	(2001; R 2001 thru 2009) Standard for

	Protectors for Paired Conductor Communication Circuits
UL 510	(2005; R 2008) Standard for Polyvinyl Chloride, Polyethylene, and Rubber Insulating Tape
UL 83	(2008) Thermoplastic-Insulated Wires and Cables

1.2 RELATED REQUIREMENTS

Section 27 10 00 BUILDING TELECOMMUNICATIONS CABLING SYSTEM, and D-B Contractor prepared Section 33 71 01 OVERHEAD TRANSMISSION AND DISTRIBUTION, and D-B Contractor prepared Section 33 71 02.00 20 UNDERGROUND ELECTRICAL DISTRIBUTION apply to this section with additions and modifications specified herein.

1.3 DEFINITIONS

Unless otherwise specified or indicated, electrical and electronics terms used in this specification shall be as defined in TIA-568-C.1, TIA/EIA-568-B.2, TIA-568-C.3, TIA/EIA-569-B, TIA/EIA-606-A, and IEEE 100 and herein.

1.3.1 Campus Distributor (CD)

A distributor from which the campus backbone cabling emanates. (International expression for main cross-connect - (MC).)

1.3.2 Entrance Facility (EF) (Telecommunications)

An entrance to the building for both private and public network service cables (including antennae) including the entrance point at the building wall and continuing to the entrance room or space.

1.3.3 Entrance Room (ER)

A centralized space for telecommunications equipment that serves the occupants of a building. Equipment housed therein is considered distinct from a telecommunications room because of the nature of its complexity.

1.3.4 Building Distributor (BD)

A distributor in which the building backbone cables terminate and at which connections to the campus backbone cables may be made. (International expression for intermediate cross-connect - (IC).)

1.3.5 Pathway

A physical infrastructure utilized for the placement and routing of telecommunications cable.

1.4 SYSTEM DESCRIPTION

The telecommunications outside plant consists of cable, conduit, manholes, poles, etc. required to provide signal paths from the closest point of presence to the new facility, including free standing frames or backboards, interconnecting hardware, terminating cables, lightning and surge

protection modules at the entrance facility. The work consists of providing, testing and making operational cabling, interconnecting hardware and lightning and surge protection necessary to form a complete outside plant telecommunications system for continuous use. The telecommunications contractor must coordinate with Base Telephone concerning layout and configuration of the EF telecommunications and OSP. The telecommunications contractor may be required to coordinate work effort for access to the EF telecommunications and OSP with Base Telephone.

1.5 SUBMITTALS

Government approval is required for submittals with a "G" designation; submittals not having a "G" designation are for Contractor Quality Control approval. The following shall be submitted in accordance with Section 01 33 00.05 20 CONSTRUCTION SUBMITTAL PROCEDURES and Section 01 33 10.05 20 DESIGN SUBMITTAL PROCEDURES:

a. Submittals shall include the manufacturer's name, trade name, place of manufacture, and catalog model or number. Submittals shall also include applicable federal, military, industry, and technical society publication references. Should manufacturer's data require supplemental information for clarification, the supplemental information shall be submitted as specified in paragraph "Regulatory Requirements" and as required for certificates in Section 01 33 00.05 20 CONSTRUCTION SUBMITTAL PROCEDURES and Section 01 33 10.05 20 DESIGN SUBMITTAL PROCEDURES.

b. Commercial off-the-shelf manuals shall be provided for operation, installation, configuration, and maintenance of products provided as a part of the telecommunications outside plant (OSP). Submit operations and maintenance data in accordance with Section 01 78 24.05 20 FACILITY OPERATION AND MAINTENANCE SUPPORT INFORMATION, and as specified herein not later than 2 months prior to the date of beneficial occupancy. In addition to requirements of Section 01 78 24.05 20 FACILITY OPERATION AND MAINTENANCE SUPPORT INFORMATION, include the requirements of paragraphs "Telecommunications Outside Plant Shop Drawings" and "Telecommunications Entrance Facility Drawings."

SD-02 Shop Drawings

Telecommunications Outside Plant; G

Telecommunications Entrance Facility Drawings; G

SD-03 Product Data

Wire and cable; G

Cable splices, and connectors; G

Closures; G

Building protector assemblies; G

Protector modules; G

Cross-connect terminal cabinets; G

Spare Parts; G

SD-06 Test Reports

Pre-installation tests; G

Acceptance tests; G

Outside Plant Test Plan; G

SD-07 Certificates

Telecommunications Contractor Qualifications; G

Key Personnel Qualifications; G

Minimum Manufacturer's Qualifications; G

SD-08 Manufacturer's Instructions

Building protector assembly installation; G

Cable tensions; G

Fiber Optic Splices; G

Submit instructions prior to installation.

SD-09 Manufacturer's Field Reports

Factory Reel Test Data; G

SD-10 Operation and Maintenance Data

Telecommunications outside plant (OSP), Data Package 5; G

SD-11 Closeout Submittals

Record Documentation; G

In addition to other requirements, provide in accordance with paragraph "Record Documentation".

1.6 QUALITY ASSURANCE

1.6.1 Shop Drawings

Include wiring diagrams and installation details of equipment indicating proposed location, layout and arrangement, control panels, accessories, piping, ductwork, and other items that must be shown to ensure a coordinated installation. Wiring diagrams shall identify circuit terminals and indicate the internal wiring for each item of equipment and the interconnection between each item of equipment. Drawings shall indicate adequate clearance for operation, maintenance, and replacement of operating equipment devices. Submittals shall include the nameplate data, size, and capacity. Submittals shall also include applicable federal, military, industry, and technical society publication references.

1.6.1.1 Telecommunications Outside Plant Shop Drawings

Provide Outside Plant Design in accordance with TIA-758-A, RUS Bull 1751F-630 for aerial system design, RUS Bull 1751F-643 for underground duct system design and for direct buried system design. Provide T0 shop drawings that show the physical and logical connections from the perspective of an entire campus, such as actual building locations, exterior pathways and campus backbone cabling on plan view drawings, major system nodes, and related connections on the logical system drawings in accordance with TIA/EIA-606-A. Drawings shall include wiring and schematic diagrams for fiber optic and copper cabling and splices, copper conductor gauge and pair count, fiber pair count and type, pathway duct and innerduct arrangement, associated construction materials, and any details required to demonstrate that cable system has been coordinated and will properly support the switching and transmission system identified in specification and drawings. Provide Registered Communications Distribution Designer (RCDD) approved drawings of the telecommunications outside plant. Update existing telecommunication Outside Plant T0 drawings to include information modified, deleted or added as a result of this installation in accordance with TIA/EIA-606-A. The telecommunications outside plant (OSP) shop drawings shall be included in the operation and maintenance manuals.

1.6.1.2 Telecommunications Entrance Facility Drawings

Provide T3 drawings for EF Telecommunications in accordance with TIA/EIA-606-A that include telecommunications entrance facility plan views, pathway layout (cable tray, racks, ladder-racks, etc.), mechanical/electrical layout, and cabinet, rack, backboard, and wall elevations. Drawings shall show layout of applicable equipment including building protector assembly, incoming cable connector blocks, patch panels and equipment spaces, and cabinet/racks. Drawings shall include a complete list of equipment and material, equipment rack details, proposed layout and anchorage of equipment and appurtenances, and equipment relationship to other parts of the work including clearance for maintenance and operation. Drawings may also be an enlargement of a congested area of T1 or T2 drawings. Provide T3 drawings for EF Telecommunications as specified in the paragraph "Telecommunication Space Drawings" of Section 27 10 00 BUILDING TELECOMMUNICATIONS CABLING SYSTEM. The telecommunications entrance facility shop drawings shall be included in the operation and maintenance manuals.

1.6.2 Telecommunications Qualifications

Work under this section shall be performed by and the equipment shall be provided by the approved telecommunications contractor and key personnel. Qualifications shall be provided for: the telecommunications system contractor, the telecommunications system installer, the supervisor (if different from the installer), and the cable splicing and terminating personnel. A minimum of 30 days prior to installation, submit documentation of the experience of the telecommunications contractor and of the key personnel.

1.6.2.1 Telecommunications Contractor Qualifications

The telecommunications contractor shall be a firm which is regularly and professionally engaged in the business of the applications, installation, and testing of the specified telecommunications systems and equipment. The telecommunications contractor shall demonstrate experience in providing successful telecommunications systems that include outside plant and

broadband cabling within the past 3 years. Submit documentation for a minimum of three and a maximum of five successful telecommunication system installations for the telecommunications contractor. Each of the key personnel shall demonstrate experience in providing successful telecommunications systems in accordance with TIA-758-A within the past 3 years.

1.6.2.2 Key Personnel Qualifications

Provide key personnel who are regularly and professionally engaged in the business of the application, installation and testing of the specified telecommunications systems and equipment. There may be one key person or more key persons proposed for this solicitation depending upon how many of the key roles each has successfully provided. Each of the key personnel shall demonstrate experience in providing successful telecommunications systems within the past 3 years.

Cable splicing and terminating personnel assigned to the installation of this system or any of its components shall have training in the proper techniques and have a minimum of 3 years experience in splicing and terminating the specified cables. Modular splices shall be performed by factory certified personnel or under direct supervision of factory trained personnel for products used.

Supervisors and installers assigned to the installation of this system or any of its components shall have factory or factory approved certification from each equipment manufacturer indicating that they are qualified to install and test the provided products.

Submit documentation for a minimum of three and a maximum of five successful telecommunication system installations for each of the key personnel. Documentation for each key person shall include at least two successful system installations provided that are equivalent in system size and in construction complexity to the telecommunications system proposed for this solicitation. Include specific experience in installing and testing telecommunications outside plant systems, including broadband cabling, and provide the names and locations of at least two project installations successfully completed using optical fiber and copper telecommunications cabling systems. All of the existing telecommunications system installations offered by the key persons as successful experience shall have been in successful full-time service for at least 18 months prior to the issuance date for this solicitation. Provide the name and role of the key person, the title, location, and completed installation date of the referenced project, the referenced project owner point of contact information including name, organization, title, and telephone number, and generally, the referenced project description including system size and construction complexity.

Indicate that all key persons are currently employed by the telecommunications contractor, or have a commitment to the telecommunications contractor to work on this project. All key persons shall be employed by the telecommunications contractor at the date of issuance of this solicitation, or if not, have a commitment to the telecommunications contractor to work on this project by the date that the bid was due to the Contracting Officer.

Note that only the key personnel approved by the Contracting Officer in the successful proposal shall do work on this solicitation's telecommunications system. Key personnel shall function in the same roles in this contract,

as they functioned in the offered successful experience. Any substitutions for the telecommunications contractor's key personnel requires approval from the Contracting Officer.

1.6.2.3 Minimum Manufacturer's Qualifications

Cabling, equipment and hardware manufacturers shall have a minimum of 3 years experience in the manufacturing, assembly, and factory testing of components which comply with, TIA-568-C.1, TIA/EIA-568-B.2 and TIA-568-C.3. In addition, cabling manufacturers shall have a minimum of 3 years experience in the manufacturing and factory testing of cabling which comply with ICEA S-87-640, ICEA S-98-688, and ICEA S-99-689.

1.6.3 Outside Plant Test Plan

Prepare and provide a complete and detailed test plan for field tests of the outside plant including a complete list of test equipment for the copper conductor and optical fiber cables, components, and accessories for approval by the Contracting Officer. Include a cut-over plan with procedures and schedules for relocation of facility station numbers without interrupting service to any active location. Submit the plan at least 30 days prior to tests for Contracting Officer approval. Provide outside plant testing and performance measurement criteria in accordance with TIA-568-C.1 and RUS Bull 1753F-201. Include procedures for certification, validation, and testing that includes fiber optic link performance criteria.

1.6.4 Standard Products

Provide materials and equipment that are standard products of manufacturers regularly engaged in the production of such products which are of equal material, design and workmanship and shall be the manufacturer's latest standard design that has been in satisfactory commercial or industrial use for at least two years prior to bid opening. The two year period shall include applications of equipment and materials under similar circumstances and of similar size. The product shall have been on sale on the commercial market through advertisements, manufacturer's catalogs, or brochures during the two year period. Products supplied shall be specifically designed and manufactured for use with outside plant telecommunications systems. Where two or more items of the same class of equipment are required, these items shall be products of a single manufacturer; however, the component parts of the item need not be the products of the same manufacturer unless stated in this section.

1.6.4.1 Alternative Qualifications

Products having less than a two-year field service record will be acceptable if a certified record of satisfactory field operation for not less than 6000 hours, exclusive of the manufacturer's factory or laboratory tests, is provided.

1.6.4.2 Material and Equipment Manufacturing Date

Products manufactured more than 3 years prior to date of delivery to site shall not be used, unless specified otherwise.

1.6.5 Regulatory Requirements

In each of the publications referred to herein, consider the advisory provisions to be mandatory, as though the word, "shall" had been

substituted for "should" wherever it appears. Interpret references in these publications to the "authority having jurisdiction," or words of similar meaning, to mean the Contracting Officer. Equipment, materials, installation, and workmanship shall be in accordance with the mandatory and advisory provisions of NFPA 70 unless more stringent requirements are specified or indicated.

1.6.5.1 Independent Testing Organization Certificate

In lieu of the label or listing, submit a certificate from an independent testing organization, competent to perform testing, and approved by the Contracting Officer. The certificate shall state that the item has been tested in accordance with the specified organization's test methods and that the item complies with the specified organization's reference standard.

1.7 DELIVERY, STORAGE, AND HANDLING

Ship cable on reels in 5000 foot lengths for 25, 50 or 100 pair configuration and 1250 feet length for larger cables. Radius of the reel drum shall not be smaller than the minimum bend radius of the cable. Wind cable on the reel so that unwinding can be done without kinking the cable. Two meters of cable at both ends of the cable shall be accessible for testing. Attach permanent label on each reel showing length, cable identification number, cable size, cable type, and date of manufacture. Provide water resistant label and the indelible writing on the labels. Apply end seals to each end of the cables to prevent moisture from entering the cable. Reels with cable shall be suitable for outside storage conditions when temperature ranges from minus 40 degrees C to plus 65 degrees C, with relative humidity from 0 to 100 percent. Equipment, other than cable, delivered and placed in storage shall be stored with protection from weather, humidity and temperature variation, dirt and dust, or other contaminants in accordance with manufacturer's requirements.

1.8 MAINTENANCE

1.8.1 Record Documentation

Provide the activity responsible for telecommunications system maintenance and administration a single complete and accurate set of record documentation for the entire telecommunications system with respect to this project.

Provide record documentation as specified in Section 27 10 00 BUILDING TELECOMMUNICATIONS CABLING SYSTEM.

Provide T5 drawings including documentation on cables and termination hardware in accordance with TIA/EIA-606-A. T5 drawings shall include schedules to show information for cut-over and cable plant management, patch panel layouts, cross-connect information and connecting terminal layout as a minimum. T5 drawings shall be provided in both hard copy format and on electronic media using Windows based computer cable management software. A licensed copy of the cable management software including documentation shall be provided. Update existing record documentation to reflect campus distribution T0 drawings and T3 drawing schedule information modified, deleted or added as a result of this installation. Provide the following T5 drawing documentation as a minimum:

a. Cables - A record of installed cable shall be provided in accordance with TIA/EIA-606-A. The cable records shall include

only the required data fields on the hard copy and the required data fields for each cable and complete end-to-end circuit report for each complete circuit from the assigned outlet to the entry facility for the soft copy in accordance with TIA/EIA-606-A. Include manufacture date of cable with submittal.

b. Termination Hardware - Provide a record of installed patch panels, cross-connect points, campus distributor and terminating block arrangements and type in accordance with TIA/EIA-606-A. Documentation shall include the required data fields in accordance with TIA/EIA-606-A.

1.8.2 Spare Parts

In addition to the requirements of Section 01 78 24.05 20 FACILITY OPERATION AND MAINTENANCE SUPPORT INFORMATION, provide a complete list of parts and supplies, with current unit prices and source of supply, and a list of spare parts recommended for stocking. Spare parts shall be provided no later than the start of field testing.

1.9 WARRANTY

The equipment items shall be supported by service organizations which are reasonably convenient to the equipment installation in order to render satisfactory service to the equipment on a regular and emergency basis during the warranty period of the contract.

PART 2 PRODUCTS

2.1 MATERIALS AND EQUIPMENT

Products supplied shall be specifically designed and manufactured for use with outside plant telecommunications systems.

2.2 TELECOMMUNICATIONS ENTRANCE FACILITY

2.2.1 Building Protector Assemblies

Building protector assembly shall be self-contained and have interconnecting hardware for connection to exterior cabling at full capacity. Provide manufacturers instructions for building protector assembly installation. Provide copper cable interconnecting hardware as specified in Section 27 10 00 BUILDING TELECOMMUNICATIONS CABLING SYSTEM.

2.2.2 Protector Modules

Provide in accordance with UL 497 three-electrode gas tube or solid state type, 5 pin rated for the application. Provide gas tube protection modules in accordance with RUS Bull 345-83 and shall be heavy duty, A>10kA, B>400, C>65A, where A is the maximum single impulse discharge current, B is the impulse life and C is the AC discharge current in accordance with ANSI C62.61. The gas modules shall shunt high voltage to ground, fail short, and be equipped with an external spark gap and heat coils in accordance with UL 497. Provide the number of surge protection modules equal to the number of pairs of exterior cable of the building protector assembly.

2.2.3 Fiber Optic Terminations

Provide fiber optic cable terminations as specified in Section 27 10 00 BUILDING TELECOMMUNICATIONS CABLING SYSTEM.

2.2.4 Pathways

For underground applications, provide a minimum of two (2) four inch ducts, one of which contains four (4) one (1) inch innerducts, 3 inch concrete encased, 24 inches below grade minimum, from the Telecommunications Entrance Facility to the maintenance hole that will be providing service to the building. The ducts will be plugged at both ends.

For direct buried applications, provide a minimum of two (2) four inch ducts from the Telecommunications Entrance Facility to five feet outside the building, 24 inches below grade. The ducts will be plugged at both ends and clearly marked on outside end.

Handholes and maintenance holes shall be traffic rated (MIN tier 15). Handhole size min 4'x4'x4'. Maintenance hole size min 6'x7'x8'.

2.3 CLOSURES

2.3.1 Copper Conductor Closures

2.3.1.1 Aerial Cable Closures (Off-Base)

Provide cable closure assembly consisting of a frame with clamps, a lift-off polyethylene cover, cable nozzles, and drop wire rings. Closure shall be suitable for use on Figure 8 cables. Closures shall be free breathing and suitable for housing either straight-through type or the branch type splices of non-pressurized communications cables and shall be sized as indicated. The closure shall be constructed with ultraviolet resistant PVC.

NOTE: The installation of aerial telecommunications cabling aboard Marine Corps Base, Camp Lejeune and Marine Corps Air Station, New River is not authorized.

2.3.1.2 Underground Cable Closures

a. Aboveground. Provide aboveground closures constructed of not less than 14 gauge steel and acceptable pole or stake mounting in accordance with RUS 1755.910. Closures shall be sized and contain a marker as indicated. Covers shall be secured to prevent unauthorized entry. PVC type closures are to be used in beach areas. All pedestals shall contain a minimum 4 foot x 3/8 inch pigtailed ground rod.

b. Direct burial. Provide buried closure suitable for enclosing a straight, butt, and branch splice in a container into which can be poured an encapsulating compound. Closure shall have adequate strength to protect the splice and maintain cable shield electrical continuity in the buried environment. Encapsulating compound shall be re-enterable and shall not alter the chemical stability of the closure. Provide filled splice cases in accordance with RUS Bull 345-72.

c. In vault or manhole. Provide underground closure suitable to

house a straight, butt, and branch splice in a protective housing into which can be poured an encapsulating compound. Closure shall be of suitable thermoplastic, thermoset, or stainless steel material supplying structural strength necessary to pass the mechanical and electrical requirements in a vault or manhole environment. Encapsulating compound shall be re-enterable and shall not alter the chemical stability of the closure. Provide filled splice cases in accordance with RUS Bull 345-72.

2.3.2 Fiber Optic Closures

2.3.2.1 Aerial (Off-Base)

Provide aerial closure that is free breathing and suitable for housing splice organizer of non-pressurized cables. Closure shall be constructed from heavy PVC with ultraviolet resistance.

NOTE: The installation of aerial telecommunications cabling aboard Marine Corps Base, Camp Lejeune and Marine Corps Air Station, New River is not authorized.

2.3.2.2 Direct Burial

Provide buried closure suitable to house splice organizer in protective housing into which can be poured an encapsulating compound. Closure shall have adequate strength to protect the splice and maintain cable shield electrical continuity, when metallic, in buried environment. Encapsulating compound shall be reenterable and shall not alter chemical stability of the closure.

2.3.2.3 Vaults or Manholes

Provide underground closure suitable to house splice organizer in a protective housing into which can be poured an encapsulating compound. Closure shall be of thermoplastic, thermoset, or stainless steel material supplying structural strength necessary to pass the mechanical and electrical requirements in a vault or manhole environment. Encapsulating compound shall be reenterable and shall not alter the chemical stability of the closure.

2.4 PAD MOUNTED CROSS-CONNECT TERMINAL CABINETS

Provide in accordance with RUS 1755.910 and the following:

a. Constructed of 14 gauge steel.

b. Equipped with a double set of hinged doors with closed-cell foam weatherstripping. Doors shall be locked and contain a marker as indicated.

c. Equipped with spool spindle bracket, mounting frames, binding post log, jumpering instruction label, and load coil mounting provisions.

d. Complete with cross connect modules to terminate number of pairs as indicated.

e. Sized as indicated.

2.5 CABLE SPLICES, AND CONNECTORS

2.5.1 Copper Cable Splices

Provide multi-pair, in-line fold back or single pair, in-line splices of a moisture resistant, three-wire insulation displacement connector held rigidly in place to assure maximum continuity in accordance with RUS Bull 1753F-401. Cables greater than 25 pairs shall be spliced using multi-pair splicing connectors, which accommodate 25 pairs of conductors at a time. Provide correct connector size to accommodate the cable gauge of the supplied cable. Provide enough cable slack suitable for splicing operations, but in no case less than 10 feet.

2.5.2 Copper Cable Splice Connector

Provide splice connectors with a polycarbonate body and cap and a tin-plated brass contact element. Connector shall accommodate 19 to 26 AWG solid wire with a maximum insulation diameter of 0.065 inch. Fill connector with sealant grease to make a moisture resistant connection, in accordance with RUS Bull 1753F-401.

2.5.3 Fiber Optic Cable Splices

Provide fiber optic cable splices and splicing materials for fusion methods at locations shown on the construction drawings. The splice insertion loss shall be 0.3 dB maximum when measured in accordance with TIA-455-78 using an Optical Time Domain Reflectometer (OTDR). Splices shall be designed for a return loss of 40.0 db max for single mode fiber when tested in accordance with TIA-455-107A. Physically protect each fiber optic splice by a splice kit specially designed for the splice. Provide enough cable slack suitable for splicing operations, but in no case less than 30 feet.

2.5.4 Fiber Optic Splice Organizer

Provide splice organizer suitable for housing fiber optic splices in a neat and orderly fashion. Splice organizer shall allow for a minimum of 1 m (3 feet) of fiber for each fiber within the cable to be neatly stored without kinks or twists. Splice organizer shall accommodate individual strain relief for each splice and allow for future maintenance or modification, without damage to the cable or splices. Provide splice organizer hardware, such as splice trays, protective glass shelves, and shield bond connectors in a splice organizer kit. All fiber optic cable shall be installed according to Manufacturer's product Standard Recommended Procedure (SRP).

2.5.5 Shield Connectors

Provide connectors with a stable, low-impedance electrical connection between the cable shield and the bonding conductor in accordance with RUS Bull 345-65.

2.6 CONDUIT

Provide conduit as specified in D-B Contractor prepared Section 33 71 02.00 20 UNDERGROUND ELECTRICAL DISTRIBUTION.

2.7 PLASTIC INSULATING TAPE

UL 510.

2.8 WIRE AND CABLE

2.8.1 Copper Conductor Cable

Solid copper conductors, covered with an extruded solid insulating compound. Insulated conductors shall be twisted into pairs which are then stranded or oscillated to form a cylindrical core. For special high frequency applications, the cable core shall be separated into compartments. Cable shall be completed by the application of a suitable core wrapping material, a corrugated copper or plastic coated aluminum shield, and an overall extruded jacket. Telecommunications contractor shall verify distances between splice points prior to ordering cable in specific cut lengths. Gauge of conductor shall determine the range of numbers of pairs specified; 19 gauge (6 to 400 pairs), 22 gauge (6 to 1200 pairs), 24 gauge (6 to 2100 pairs), and 26 gauge (6 to 3000 pairs). Copper conductors shall conform to the following: All copper conductor cable from 6 to 1800 pair shall be PE-39 type.

2.8.1.1 Underground

Provide filled cable (type PE-39) meeting the requirements of ICEA S-99-689 and RUS 1755.390. Provide enough cable slack suitable for splicing operations, but in no case less than 10 feet.

2.8.1.2 Aerial (Off-Base)

Provide filled cable meeting the requirements of ICEA S-99-689, ICEA S-98-688, and RUS 1755.390 except that it shall be suitable for aerial installation and shall be Figure 8 distribution wire with 26,700 N (6,000 pound) Class A galvanized steel or 26,700 N (6,000 pound) aluminum-clad steel strand.

NOTE: The installation of aerial telecommunications cabling aboard Marine Corps Base, Camp Lejeune and Marine Corps Air Station, New River is not authorized.

2.8.1.3 Screen

Provide screen-compartmental core cable filled cable meeting the requirements of ICEA S-99-689 and RUS 1755.390.

2.8.2 Fiber Optic Cable

Provide single-mode, 8/125-um, 0.10 aperture 1310 & 1550 nm fiber optic cable in accordance with TIA-492CAAA, TIA-492E000, TIA-472D000-A, and ICEA S-87-640 including any special requirements made necessary by a specialized design. Provide a minimum of 24 optical fibers. Fiber optic cable shall be specifically designed for outside use with loose tubed buffer construction and corning glass and must be shielded. Provide fiber optic color code in accordance with TIA/EIA-598-B.

2.8.2.1 Strength Members

Provide central/non-central, and non-metallic/metallic strength members with sufficient tensile strength for installation and residual rated loads to meet the applicable performance requirements in accordance with ICEA S-87-640. The strength member is included to serve as a cable core foundation to reduce strain on the fibers, and shall not serve as a pulling strength member.

2.8.2.2 Shielding or Other Metallic Covering

Provide bare aluminum or coated aluminum single tape covering or shield in accordance with ICEA S-87-640 on all cables.

2.8.2.3 Performance Requirements

Provide fiber optic cable with optical and mechanical performance requirements in accordance with ICEA S-87-640.

2.8.3 Grounding and Bonding Conductors

Provide grounding and bonding conductors in accordance with RUS 1755.200, TIA J-STD-607-A, IEEE C2, and NFPA 70. Solid bare copper wire meeting the requirements of ASTM B 1 for sizes No. 8 AWG and smaller and stranded bare copper wire meeting the requirements of ASTM B 8, for sizes No. 6 AWG and larger. Insulated conductors shall have 600-volt, Type TW insulation meeting the requirements of UL 83.

2.9 T-SPAN LINE TREATMENT REPEATERS

Provide as indicated. Repeaters shall be pedestal mounted with pressurized housings, sized as indicated and shall meet the requirements of RUS Bull 345-50.

2.10 POLES AND HARDWARE (OFF-BASE)

Provide poles and hardware as specified in D-B Contractor prepared Section 33 71 01 OVERHEAD TRANSMISSION AND DISTRIBUTION.

NOTE: The installation of aerial telecommunications cabling aboard Marine Corps Base, Camp Lejeune and Marine Corps Air Station, New River is not authorized.

2.11 CABLE TAGS IN MANHOLES, HANDHOLES, AND VAULTS

Provide tags for each telecommunications cable or wire located in manholes, handholes, and vaults. Cable tags shall be stainless steel or polyethylene and labeled in accordance with TIA/EIA-606-A. Handwritten labeling is unacceptable.

2.11.1 Stainless Steel

Provide stainless steel, cable tags 41.25 mm (1 5/8 inches) in diameter 1.58 mm (1/16 inch) thick minimum, and circular in shape. Tags shall be die stamped with numbers, letters, and symbols not less than 6.35 mm (0.25 inch) high and approximately 0.38 mm (0.015 inch) deep in normal block style.

2.11.2 Polyethylene Cable Tags

Provide tags of polyethylene that have an average tensile strength of 22.4 MPa (3250 pounds per square inch); and that are two millimeter (0.08 inch) thick minimum, non-corrosive non-conductive; resistive to acids, alkalis, organic solvents, and salt water; and distortion resistant to 77 degrees C (170 degrees F). Provide 1.3 mm (0.05 inch) minimum thick black polyethylene tag holder. Provide a one-piece nylon, self-locking tie at each end of the cable tag. Ties shall have a minimum loop tensile strength

of 778.75 N (175 pounds). The cable tags shall have black block letters, numbers, and symbols 25 mm (one inch) high on a yellow background. Letters, numbers, and symbols shall not fall off or change positions regardless of cable tag orientation.

2.12 BURIED WARNING AND IDENTIFICATION TAPE

Provide metallic fiber optic media marking and protection in accordance with TIA-590-A. Provide color, type and depth of tape as specified in paragraph "Buried Warning and Identification Tape" in D-B Contractor prepared Section 31 23 00.00 20 EXCAVATION AND FILL.

2.13 GROUNDING BRAID

Provide grounding braid that provides low electrical impedance connections for dependable shield bonding in accordance with RUS 1755.200. Braid shall be made from flat tin-plated copper.

2.14 MANUFACTURER'S NAMEPLATE

Each item of equipment shall have a nameplate bearing the manufacturer's name, address, model number, and serial number securely affixed in a conspicuous place; the nameplate of the distributing agent will not be acceptable.

2.15 FIELD FABRICATED NAMEPLATES

Provide laminated plastic nameplates in accordance with ASTM D 709 for each patch panel, protector assembly, rack, cabinet and other equipment or as indicated on the drawings. Each nameplate inscription shall identify the function and, when applicable, the position. Nameplates shall be melamine plastic, 3 mm (0.125 inch) thick, white with black center core. Surface shall be matte finish. Corners shall be square. Accurately align lettering and engrave into the core. Minimum size of nameplates shall be 25 by 65 mm (one by 2.5 inches). Lettering shall be a minimum of 6.35 mm (0.25 inch) high, and of normal block style.

2.16 TESTS, INSPECTIONS, AND VERIFICATIONS

2.16.1 Factory Reel Test Data

Test 100 percent OTDR test of FO media at the factory in accordance with TIA-568-C.1 and TIA-568-C.3. Use TIA-526-7 for single mode fiber and TIA-526-14-A Method B for multi mode fiber measurements. Calibrate OTDR to show anomalies of 0.2 dB minimum. Enhanced performance filled OSP copper cables, referred to as Broadband Outside Plant (BBOSP), shall meet the requirements of ICEA S-99-689. Enhanced performance air core OSP copper cables shall meet the requirements of ICEA S-98-688. Submit test reports, including manufacture date for each cable reel and receive approval before delivery of cable to the project site.

PART 3 EXECUTION

3.1 INSTALLATION

Install all system components and appurtenances in accordance with manufacturer's instructions IEEE C2, NFPA 70, and as indicated. Provide all necessary interconnections, services, and adjustments required for a complete and operable telecommunications system.

3.1.1 Contractor Damage

Promptly repair indicated utility lines or systems damaged during site preparation and construction. Damages to lines or systems not indicated, which are caused by Contractor operations, shall be treated as "Changes" under the terms of the Contract Clauses. When Contractor is advised in writing of the location of a nonindicated line or system, such notice shall provide that portion of the line or system with "indicated" status in determining liability for damages. In every event, immediately notify the Contracting Officer of damage.

3.1.2 Cable Inspection and Repair

Handle cable and wire provided in the construction of this project with care. Inspect cable reels for cuts, nicks or other damage. Damaged cable shall be replaced or repaired to the satisfaction of the Contracting Officer. Reel wraps shall remain intact on the reel until the cable is ready for placement.

3.1.3 Direct Burial System

Installation shall be in accordance with RUS Bull 1751F-640. Under railroad tracks, paved areas, and roadways install cable in conduit encased in concrete. Slope ducts to drain. Excavate trenches by hand or mechanical trenching equipment. Provide a minimum cable cover of 915mm (36 inches) below finished grade for both fiber and copper cable. Trenches shall be not less than 155 mm (6 inches) wide and in straight lines between cable markers. Do not use cable plows. Bends in trenches shall have a radius of not less than 915 mm (36 inches). Where two or more cables are laid parallel in the same trench, space laterally at least 78 mm (3 inches) apart. When rock is encountered, remove it to a depth of at least 78 mm (3 inches) below the cable and fill the space with sand or clean earth, free from particles larger than 6 mm (1/4 inch). Do not unreel and pull cables into the trench from one end. Cable may be unreeled on grade and lifted into position. Provide color, type and depth of metallic warning tape as specified in paragraph "Buried Warning and Identification Tape" in D-B Contractor prepared Section 31 23 00.00 20 EXCAVATION AND FILL.

3.1.3.1 Cable Placement

a. Prior to design and installation of any copper or optical fiber cable systems, cable routes and pathways must be approved by the Base Telephone Officer.

b. Separate cables crossing other cables or metal piping from the other cables or pipe by not less than 78 mm (3 inches) of well tamped earth. Do not install circuits for communications under or above traffic signal loops.

c. Cables shall be in one piece without splices between connections except where the distance exceeds the lengths in which the cable is furnished.

d. Avoid bends in cables of small radii and twists that might cause damage. Do not bend cable and wire in a radius less than 10 times the outside diameter of the cable or wire.

e. Leave a horizontal slack of approximately 3048 mm (10 feet) in the

ground on each end of cable runs, on each side of connection boxes, and at points where connections are brought aboveground. Where cable is brought above ground, leave additional slack to make necessary connections.

3.1.3.2 Identification Markers

Provide a marker at each change of direction of the cable, over the ends of ducts or conduits which are installed under paved areas and roadways and over each splice. Identification markers shall be of concrete, approximately 20 inches square by 6 inches thick.

3.1.3.3 Backfill for Rocky Soil

When placing cable in a trench in rocky soil, the cable shall be cushioned by a fill of sand or selected soil at least 2 inches thick on the floor of the trench before placing the cable or wire. The backfill for at least 4 inches above the wire or cable shall be free from stones, rocks, or other hard or sharp materials which might damage the cable or wire. If the buried cable is placed less than 24 inches in depth, a protective cover of concrete shall be used.

3.1.4 Cable Protection

Provide direct burial cable protection in accordance with NFPA 70 and as specified in D-B Contractor prepared Section 33 71 02.00 20 UNDERGROUND ELECTRICAL DISTRIBUTION. Galvanized conduits which penetrate concrete (slabs, pavement, and walls) shall be PVC coated and shall extend from the first coupling or fitting outside either side of the concrete minimum of 155 mm per 305 mm (6 inches per 12 inches) burial depth beyond the edge of the surface where cable protection is required; all conduits shall be sealed on each end. Where additional protection is required, cable may be placed in galvanized iron pipe (GIP) sized on a maximum fill of 40% of cross-sectional area, or in concrete encased 103 mm (4 inches) PVC pipe. Conduit may be installed by jacking or trenching. Trenches shall be backfilled with earth and mechanically tamped at 155 mm (6 inches) lift so that the earth is restored to the same density, grade and vegetation as adjacent undisturbed material.

3.1.4.1 Cable End Caps

Cable ends shall be sealed at all times with coated heat shrinkable end caps. Cables ends shall be sealed when the cable is delivered to the job site, while the cable is stored and during installation of the cable. The caps shall remain in place until the cable is spliced or terminated. Sealing compounds and tape are not acceptable substitutes for heat shrinkable end caps. Cable which is not sealed in the specified manner at all times will be rejected.

3.1.5 Underground Duct

Provide underground duct and connections to existing manholes, handholes, concrete pads, or existing ducts as specified in D-B Contractor prepared Section 33 71 02.00 20 UNDERGROUND ELECTRICAL DISTRIBUTION with any additional requirements as specified herein. Minimum size of ducts shall be 103mm (4 inch) and minimum number will be two (2).

3.1.6 Reconditioning of Surfaces

Provide reconditioning of surfaces as specified in D-B Contractor prepared Section 33 71 02.00 20 UNDERGROUND ELECTRICAL DISTRIBUTION.

3.1.7 Penetrations

Caulk and seal cable access penetrations in walls, ceilings and other parts of the building. Seal openings around electrical penetrations through fire resistance-rated wall, partitions, floors, or ceilings in accordance with D-B Contractor prepared Section 07 84 00 FIRESTOPPING.

3.1.8 Cable Pulling

Test duct lines with a mandrel and swab out to remove foreign material before the pulling of cables. Avoid damage to cables in setting up pulling apparatus or in placing tools or hardware. Do not step on cables when entering or leaving the manhole. Do not place cables in ducts other than those shown without prior written approval of the Contracting Officer. Roll cable reels in the direction indicated by the arrows painted on the reel flanges. Set up cable reels on the same side of the manhole as the conduit section in which the cable is to be placed. Level the reel and bring into proper alignment with the conduit section so that the cable pays off from the top of the reel in a long smooth bend into the duct without twisting. Under no circumstances shall the cable be paid off from the bottom of a reel. Check the equipment set up prior to beginning the cable pulling to avoid an interruption once pulling has started. Use a cable feeder guide of suitable dimensions between cable reel and face of duct to protect cable and guide cable into the duct as it is paid off the reel. As cable is paid off the reel, lubricate and inspect cable for sheath defects. When defects are noticed, stop pulling operations and notify the Contracting Officer to determine required corrective action. Cable pulling shall also be stopped when reel binds or does not pay off freely. Rectify cause of binding before resuming pulling operations. Provide cable lubricants recommended by the cable manufacturer. Avoid bends in cables of small radii and twists that might cause damage. Do not bend cable and wire in a radius less than 10 times the outside diameter of the cable or wire.

3.1.8.1 Cable Tensions

Obtain from the cable manufacturer and provide to the Contracting Officer, the maximum allowable pulling tension. This tension shall not be exceeded.

3.1.8.2 Pulling Eyes

Equip cables 1.25 inches in diameter and larger with cable manufacturer's factory installed pulling-in eyes. Provide cables with diameter smaller than 1.25 inches with heat shrinkable type end caps or seals on cable ends when using cable pulling grips. Rings to prevent grip from slipping shall not be beaten into the cable sheath. Use a swivel of 3/4 inch links between pulling-in eyes or grips and pulling strand.

3.1.8.3 Installation of Cables in Manholes, Handholes, and Vaults

Do not install cables utilizing the shortest route, but route along those walls providing the longest route and the maximum spare cable lengths. Form cables to closely parallel walls, not to interfere with duct entrances, and support cables on brackets and cable insulators at a maximum of 4 feet. In existing manholes, handholes, and vaults where new ducts are to be

terminated, or where new cables are to be installed, modify the existing installation of cables, cable supports, and grounding as required with cables arranged and supported as specified for new cables. Identify each cable with corrosion-resistant embossed metal tags.

3.1.9 Aerial Cable Installation (Off-Base)

Pole installation shall be as specified in D-B Contractor prepared Section 33 71 01 OVERHEAD TRANSMISSION AND DISTRIBUTION. Where physical obstructions make it necessary to pull distribution wire along the line from a stationary reel, use cable stringing blocks to support wire during placing and tensioning operations. Do not place ladders, cable coils, and other equipment on or against the distribution wire. Wire shall be sagged in accordance with the data shown. Protect cable installed outside of building less than 8 feet above finished grade against physical damage.

NOTE: The installation of aerial telecommunications cabling aboard Marine Corps Base, Camp Lejeune and Marine Corps Air Station, New River is not authorized.

3.1.9.1 Figure 8 Distribution Wire

Perform spiraling of the wire within 24 hours of the tensioning operation. Perform spiraling operations at alternate poles with the approximate length of the spiral being 4575 mm (15 feet). Do not remove insulation from support members except at bonding and grounding points and at points where ends of support members are terminated in splicing and dead-end devices. Ground support wire at poles to the pole ground.

3.1.9.2 Suspension Strand

Place suspension strand as indicated. Tension in accordance with the data indicated. When tensioning strand, loosen cable suspension clamps enough to allow free movement of the strand. Place suspension strand on the road side of the pole line. In tangent construction, point the lip of the suspension strand clamp toward the pole. At angles in the line, point the suspension strand clamp lip away from the load. In level construction place the suspension strand clamp in such a manner that it will hold the strand below the through-bolt. At points where there is an up-pull on the strand, place clamp so that it will support strand above the through-bolt. Make suspension strand electrically continuous throughout its entire length, bond to other bare cables suspension strands and connect to pole ground at each pole.

3.1.9.3 Aerial Cable (Off-Base)

Keep cable ends sealed at all times using cable end caps. Take cable from reel only as it is placed. During placing operations, do not bend cables in a radius less than 10 times the outside diameter of cable. Place temporary supports sufficiently close together and properly tension the cable where necessary to prevent excessive bending. In those instances where spiraling of cabling is involved, accomplish mounting of enclosures for purposes of loading, splicing, and distribution after the spiraling operation has been completed.

NOTE: The installation of aerial telecommunications cabling aboard Marine Corps Base, Camp Lejeune and Marine Corps Air Station, New River is not authorized.

3.1.10 Cable Splicing

3.1.10.1 Copper Conductor Splices

Perform splicing in accordance with requirements of RUS Bull 1753F-401 except that direct buried splices and twisted and soldered splices are not allowed. Exception does not apply for pairs assigned for carrier application.

3.1.10.2 Fiber Optic Splices

Fiber optic splicing shall be in accordance with manufacturer's recommendation and shall exhibit an insertion loss not greater than 0.3 dB for fusion splices.

3.1.11 Surge Protection

All cables and conductors, except fiber optic cable, which serve as communication lines through off-premise lines, shall have surge protection installed at each end which meet the requirements of RUS Bull 1751F-815.

3.1.12 Grounding

Provide grounding and bonding in accordance with RUS 1755.200, TIA J-STD-607-A, IEEE C2, and NFPA 70. Ground exposed noncurrent carrying metallic parts of telephone equipment, cable sheaths, cable splices, and terminals.

3.1.12.1 Telecommunications Master Ground Bar (TMGB)

The TMGB is the hub of the basic telecommunications grounding system providing a common point of connection for ground from outside cable, CD, and equipment. Establish a TMGB for connection point for cable stub shields to connector blocks and CD protector assemblies as specified in D-B Contractor prepared Section 26 20 00 INTERIOR DISTRIBUTION SYSTEM. The TMGB will at a minimum be 4 inches by 10 inches by 1/4 inch.

3.1.12.2 Incoming Cable Shields

Shields shall not be bonded across the splice to the cable stubs at the main distribution frame. Ground shields of incoming cables in the EF Telecommunications to the TMGB.

3.1.12.3 Campus Distributor Grounding

a. Protection assemblies: Mount CD protector assemblies directly on the telecommunications backboard. Connect assemblies mounted on each vertical frame with number 6 AWG copper conductor to provide a low resistance path to TMGB.

b. TMGB connection: Connect TMGB to TGB with copper conductor with a total resistance of less than 0.01 ohms.

3.1.13 Cut-Over

All necessary transfers and cut-overs, shall be accomplished by the telecommunications contractor.

3.2 LABELING

3.2.1 Labels

Provide labeling for new cabling and termination hardware located within the facility in accordance with TIA/EIA-606-A. Handwritten labeling is unacceptable. Stenciled lettering for cable and termination hardware shall be provided using either thermal ink transfer process or laser printer.

3.2.2 Cable Tag Installation

Install cable tags for each telecommunications cable or wire located in manholes, handholes, and vaults including each splice. Tag new wire and cable provided under this contract and existing wire and cable which are indicated to have splices and terminations provided by this contract. The labeling of telecommunications cable tag identifiers shall be in accordance with TIA/EIA-606-A. Tag legend shall be as indicated. Do not provide handwritten letters. Install cable tags so that they are clearly visible without disturbing any cabling or wiring in the manholes, handholes, and vaults.

3.2.3 Termination Hardware

Label patch panels, distribution panels, connector blocks and protection modules using color coded labels with identifiers in accordance with TIA/EIA-606-A.

3.3 FIELD APPLIED PAINTING

Provide ferrous metallic enclosure finishes in accordance with the following procedures. Ensure that surfaces are dry and clean when the coating is applied. Coat joints and crevices. Prior to assembly, paint surfaces which will be concealed or inaccessible after assembly. Apply primer and finish coat in accordance with the manufacturer's recommendations. Provide ferrous metallic enclosure finishes as specified in D-B Contractor prepared Section 09 90 00 PAINTS AND COATINGS.

3.3.1 Cleaning

Clean surfaces in accordance with SSPC SP 6/NACE No.3.

3.3.2 Priming

Prime with a two component polyamide epoxy primer which has a bisphenol-A base, a minimum of 60 percent solids by volume, and an ability to build up a minimum dry film thickness on a vertical surface of 5.0 mils. Apply in two coats to a total dry film thickness of 5 to 8 mils.

3.3.3 Finish Coat

Finish with a two component urethane consisting of saturated polyester polyol resin mixed with aliphatic isocyanate which has a minimum of 50 percent solids by volume. Apply to a minimum dry film thickness of 2 to 3 mils. Color shall be the manufacturer's standard.

3.4 FIELD FABRICATED NAMEPLATE MOUNTING

Provide number, location, and letter designation of nameplates as indicated. Fasten nameplates to the device with a minimum of two

sheet-metal screws or two rivets.

3.5 FIELD QUALITY CONTROL

Provide the Contracting Officer 10 working days notice prior to each test. Provide labor, equipment, and incidentals required for testing. Correct defective material and workmanship disclosed as the results of the tests. Furnish a signed copy of the test results to the Contracting Officer within 3 working days after the tests for each segment of construction are completed. Perform testing as construction progresses and do not wait until all construction is complete before starting field tests.

3.5.1 Pre-Installation Tests

Perform the following tests on cable at the job site before it is removed from the cable reel. For cables with factory installed pulling eyes, these tests shall be performed at the factory and certified test results shall accompany the cable.

3.5.1.1 Cable Capacitance

Perform capacitance tests on all pairs within a cable to determine if cable capacitance is within the limits specified.

3.5.1.2 Loop Resistance

Perform DC-loop resistance on all of the pairs within a cable to determine if DC-loop resistance is within the manufacturer's calculated resistance.

3.5.1.3 Pre-Installation Test Results

Provide results of pre-installation tests to the Contracting Officer at least 5 working days before installation is to start. Results shall indicate reel number of the cable, manufacturer, size of cable, pairs tested, and recorded readings. When pre-installation tests indicate that cable does not meet specifications, remove cable from the job site.

3.5.2 Acceptance Tests

Perform acceptance testing in accordance with RUS Bull 1753F-201 and as further specified in this section. Provide personnel, equipment, instrumentation, and supplies necessary to perform required testing. Notification of any planned testing shall be given to the Contracting Officer at least 14 days prior to any test unless specified otherwise. Testing shall not proceed until after the Contractor has received written Contracting Officer's approval of the test plans as specified. Test plans shall define the tests required to ensure that the system meets technical, operational, and performance specifications. The test plans shall define milestones for the tests, equipment, personnel, facilities, and supplies required. The test plans shall identify the capabilities and functions to be tested. Provide test reports in booklet form showing all field tests performed, upon completion and testing of the installed system. Measurements shall be tabulated on a pair by pair or strand by strand basis.

3.5.2.1 Copper Conductor Cable

Perform the following acceptance tests in accordance with TIA-758-A:

a. Wire map (pin to pin continuity)

b. Continuity to remote end

c. Crossed pairs

d. Reversed pairs

e. Split pairs

f. Shorts between two or more conductors

g. Grounded pairs.

3.5.2.2 Fiber Optic Cable

Test fiber optic cable in accordance with TIA/EIA-455-B and as further specified in this section. Two optical tests shall be performed on all optical fibers: Optical Time Domain Reflectometry (OTDR) Test, and Attenuation Test. In addition, a Bandwidth Test shall be performed on all multimode optical fibers. These tests shall be performed on the completed end-to-end spans which include the near-end pre-connectorized single fiber cable assembly, outside plant as specified, and the far-end pre-connectorized single fiber cable assembly. Field connector terminations should be done to test at demarcation point.

a. OTDR Test: The OTDR test shall be used to determine the adequacy of the cable installations by showing any irregularities, such as discontinuities, micro-bendings or improper splices for the cable span under test. Hard copy fiber signature records shall be obtained from the OTDR for each fiber in each span and shall be included in the test results. The OTDR test shall be measured in both directions. A reference length of fiber, 1000 feet minimum, used as the delay line shall be placed before the new end connector and after the far end patch panel connectors for inspection of connector signature. Conduct OTDR test and provide calculation or interpretation of results in accordance with TIA-526-7 for single-mode fiber and TIA-526-14-A for multimode fiber. Splice losses shall not exceed 0.3 db.

b. Attenuation Test: End-to-end attenuation measurements shall be made on all fibers, in both directions, using a 850 & 1300 nanometer light source for 62.5 multi-mode fiber and 1310 & 1550 nanometer light source for single mode fiber at one end and the optical power meter on the other end to verify that the cable system attenuation requirements are met in accordance with TIA-455-46A for multimode and TIA-526-7 for single-mode fiber optic cables. The measurement method shall be in accordance with TIA-455-78. Attenuation losses shall not exceed 0.5 db/km at 1310 nm and 1550 nm for single-mode fiber. Attenuation losses shall not exceed 5.0 db/km at 850 nm and 1.5 db/km at 1300 nm for multimode fiber.

c. Bandwidth Test: The end-to-end bandwidth of all multimode fiber span links shall be measured by the frequency domain method. The bandwidth shall be measured in both directions on all fibers. The bandwidth measurements shall be in accordance with TIA TIA/EIA-455-204.

3.5.3 Soil Density Tests

a. Determine soil-density relationships for compaction of backfill material in accordance with ASTM D 1557, Method D.

b. Determine soil-density relationships as specified for soil tests in D-B Contractor prepared Section 31 23 00.00 20 EXCAVATION AND FILL.

-- End of Section --

PART 6

ATTACHMENTS

THIS PAGE HAS BEEN INTENTIONALLY LEFT BLANK

MCAS CHERRY POINT
MECHANICAL POLICIES
(12/14/06)

HVAC

1. Use the latest revision of ASHRAE 62 for guidance on indoor air quality. For the purposes of outside air ventilation only, typical occupancy is considered that which happens at least once a week for buildings that follow a regular schedule or at least 15 times a year for non-schedule type buildings.

2. Chilled water VAV with zone reheat is the preferred HVAC system and should be considered wherever appropriate.

3. Particular attention should be given to humidity control by air conditioning equipment.

4. Avoid rooftop HVAC equipment, unless absolutely unavoidable. Rooftop HVAC equipment should be used with discretion. If equipment is installed on roofs, install in accordance with roofing manufacturer's warranty, use equipment manufacturers standard roof curbs, and provide permanent ladder access. Consider equipment mounting heights and need for maintenance platforms.

5. Avoid use of chilled water fan coil (FCU) systems due the high maintenance associated with them. Coil condensate drain pans are especially problematic. If FCU's are used, ensure adequacy of the drain system.

6. Provide aluminum fins on copper tubes with coating that passes the ASTM B117-90 3000 hour salt spray resistance test for all outdoor coils larger than 10 tons. The heat transfer rating of phenolic-coated coils should be as installed (ie after coating).

7. Avoid use of cooling towers. Air-cooled equipment is preferred. If cooling towers installed, insure chemical treatment includes both biological and scale inhibitors.

8. Do not use centrifugal or steam absorption chillers. Helical screw compressors or scroll compressors are desirable.

9. HVAC equipment should not be installed in attics or above suspended ceilings, unless absolutely necessary. When placement in an attic is dictated by necessity, provide stairs to access the attic (ships ladders are undesirable), provide access and floor space for maintenance, and provide auxiliary coil drain pans with alarms below all cooling equipment and pipe separately from primary system.

10. Air handling unit filter access doors should be specified as hinged and lockable with quarter-turn, or half-turn thumb screws, or handles. Do not specify or approve access panels that are unhinged and/or retained by sheet metal screws.

11. Require contractors to provide a listing of the HVAC filters for each piece of equipment along with their dimensions (width, height and thickness) and types (permanent/washable, throwaway, etc)

12. Do not use plastic preinsulated pipe for buried dual temperature water distribution; use preinsulated copper pipe.

13. Do not specify mineral fiber or flexible unicellular insulation on chilled water pipes. Use rigid insulation on all pipes subject to being stepped on or damaged. Cellular glass, or polyisocyanurate up to 1-½ inches (40 mm) thick is preferred on chilled water pipes and other pipes below ambient temperature. Metal jacket should be utilized for exterior or high abuse areas.

14. Isolate "wet" mechanical rooms from building. All steam equipment and pumps are more prone to leaking, thus making the room humidity saturated. Provide the "wet" room with an exterior door; do not provide a door(s) to adjacent spaces. Keep electrical equipment out of this room. Minimize controls in wet mechanical rooms. Only controls necessary for equipment in the room shall be allowed. It is preferable to keep air handlers out of this room also. Do not run high-pressure steam outside the wet room (i.e. steam entrance should be directly into "wet" mechanical room).

15. Do not permit 400 series refrigerants except 407C. 400 series refrigerants are zeotropes and cause maintenance problems.

16. Do not permit/specify engine driven refrigeration equipment.

17. Outside air intakes should be in compliance with force protection criteria, i.e.; minimum of 10' above finished grade.

18. A/C terminal units with compressors shall be easily removed. On water source equipment that means unions on the equipment side of the service valves.

19. Design and specify bladder type expansion tanks with automatic air relief valve on air separator.

20. Keep in mind fall hazards when locating equipment. Provide necessary fall protection.

21. In refrigerated rooms/boxes: specify all evaporators on a condensing unit to defrost together, separate evaporator/condensing unit pairs should defrost non-concurrently.

22. Provide phase monitors on all 3-phase equipment. For chillers the following shall be included:
    a) phase unbalance protection
    b) over/under voltage protection

c) phase loss protection
d) Delay of break timer to delay automatic restarts
e) non critical fault delay
f) programmable auto/manual restart
g) load and line side monitoring

For all other equipment only phase loss, phase reversal, and phase unbalance need to be monitored. Reset shall be automatic upon correction of the fault.

23. On chillers and large condensing units; provide core filter dryer on suction line as available as standard option

24. On chillers and large condensing units; provide liquid and suction line service valves as standard option.

25. Do not permit welding on chillers. Water connections shall be by victaulic coupling or flanges. Provide 16-20 mesh strainer on water inlet.

26. Require 5 year warranty on compressor parts. Require 5 year warranty on labor if available.

27. Ductwork: Specify galvanized and draw 45 degree expanded throat take offs with balance damper for all supply run outs to diffusers and grills. Do not permit flexible duct runs exceeding 6' long. Specify that all 90 degree turns be accomplished with hard metal elbows, such as on top of diffusers, and if top take off of trunk duct.

28. Utilize extruded aluminum diffusers, registers, and grilles with factory finish.

29. Pump Packages: If specifying a pump package, designer must work out general lay out of package and mechanical room to ensure maintenance access.

30. For inline pumps 5 hp and larger include rigging points for maintenance.

31. Include chemical treatment system for all water heating/cooling systems.

32. Install disconnects on all HVAC equipment.

33. Water Source Heat Pumps (WSHP) – Install vibration isolators on units and flexible stainless steel piping connections between water source heat pumps and piping.

34. Primary heating source should utilize centralized steam. If unavailable, utilize hot water boiler. Run energy analysis to determine most cost effective fuel type – i.e., oil, propane, etc. (Natural Gas is unavailable at Cherry Point.)

35. Duct smoke detectors shall be installed on equipment above 2,000 cfm. When in alarm, detectors shall turn off equipment and send signal to building fire panel.

36. All HVAC equipment located within or outside mechanical rooms shall be fully accessible for maintenance (including coils) and be located so as to cause minimal disruption to occupants.

37. Install blow down valves on all strainers.

38. Provide separate mechanical and electrical rooms with exterior, ground level entrances, if possible.

39. Shop air compressors should not be installed within HVAC mechanical rooms as occupant access is prohibited by base maintenance.

CONTROLS

40. Avoid use of economizers (dry bulb or enthalpy). High humidity and poor control reliability prohibit success with economizers except in extremely high internal load buildings.

41. Direct Digital Control (DDC) systems are the preferred HVAC control systems for new and replacement control systems. Pneumatics should only be used for applications such as for pilot operators on large control valves. Re-establish monitoring and control capabilities for replacement control systems.

42. CO2 sensors and outside air modulation should be considered in facilities with highly varying occupancies.

43. Specify that pneumatic control devices be able to withstand 30 psi without damage.

44. Control valve actuators shall be spring return normally closed on hot water converters.

45. Control valve actuators shall be spring return normally open on preheat coils and other coils subject to freezing.

46. Specify individual scheduling for air handlers. Specify a gradual (progressive) startup and a gradual (progressive) shut down of air handlers. A sudden startup or shut down of the entire building is too fast for chiller controls to react and sometimes causes safety trips. For equipment schedule, start equipment minimum of 1 hour prior to occupancy and go into night setback at end of occupancy.

47. Connect all HVAC equipment 5-tons cooling and above to Station EMCS (Johnson Metasys). Install N2 building bus and connect to N1 Ethernet TCP/IP Level 1 network. Use the following:
    a) Provide a site building controller (SBC) and license files that allows communication between the DDC system and the station's existing EMCS system. The existing station EMCS system is Johnson Controls Metasys Extended Architecture System. Provide all necessary hardware, drivers, software, material, and equipment, which shall allow communication between the SBC and DDC upper level controllers. Provide a N2 building bus capable of connecting to a N1 Ethernet TCP/IP Level 1 network. All new DDC work for the Cherry Point Marine Corp Air Station shall be fully compatible with the existing DDC system used by Cherry Point MCAS. Full compatibility includes utilizing the same graphical representation, naming nomenclature, ability to upload/download controllers, and addition to the load management system.
    b) Provide an operator programmable system to perform closed-loop, modulating control of building equipment. The system shall have stand-alone digital controllers that are connected through the Facility Maintenance Division Ethernet communication network to share common data and report to the central server.

The data shall be accessible through direct connection with the network utilizing Windows Internet Explorer software. Integrate the new DDC system with the existing workstations located in building 87.
c) All material used shall be in current production and available for 5 years after award.

48. Utilize the following set points for heating and cooling:
    a. Outside:
        Winter – 24F
        Summer – 90F db/78F wb at 50% RH

    b. Inside:
        OCC – 70F+-2 degrees Heating and 76F+-2 degrees cooling
        UNOCC – 60F Heating and 80F cooling

    c. Index boiler/heat exchanger as follows:
        At 24F – 180F
        At 60F – 120F

49. Outside Air Ventilation – Two position (open and closed) motorized outside air (OA) damper. OA damper shall be indexed to OCC/UNOCC schedule – i.e., open in OCC and closed in UNOCC. MAU-1 should not run during UNOCC times.

50. Index exhaust fans with applicable HVAC equipment.

51. Equipment control cabinets should be located no higher than 5' AFF. Avoid locating in high humidity spaces.

PLUMBING

52. Lubrication oil lines should not be installed below building floor slabs. Lubrication oil lines installed within service bays should be installed in trenches with removable tops.

53. Install shop air compressors in accessible locations with appropriate space for periodic service. Shop air compressors should not be installed within mechanical rooms since occupant access is prohibited by base maintenance. Shop air compressors should be provided with sufficient cooling ventilation. Install air compressors associated with building HVAC controls within mechanical rooms.

54. Air compressor receivers over 5 cubic feet (37.4 gal) are unfired pressure vessels that must under go hydrostatic and operational tests.

55. Where practical provide hose bibs near all HVAC coils for wash down/cleaning purposes.

56. Provide floor drains in all mechanical rooms.

57. Provide trap primers on all floor drains except locations that are expected to get regular use thru out the year.

58. Provide sectional shut off valves for domestic hot & cold water for each bathroom (group).

59. Do not permit lever type control handles on pressure balance shower valves in BEQ's. This type of handle invites the user to pull for volume control, thereby breaking the handle.

60. Provide strainers on RPZ back flow preventors.

61. Utilize Type L copper piping for above ground piping.

STEAM

62. Steam condensate receiver pumps should be steam pressure powered. Do not use electric duplex condensate pumps. Servicing electric duplex condensate pumps cause an overlap of responsibility between the electrical and mechanical trades.

63. Minimize use of steam manholes. Those required must be raised 18 inches (450 mm) AFG and equipped with a full aluminum grated top to facilitate personnel removal.

64. Do not install steam pits within mechanical rooms.

65. Do not use FRP pipe for buried steam condensate lines. Use schedule 80 black steel pipe in condensate systems.

66. Use externally pressurized bellows expansion joints when inline expansion in steam lines is required and where loops cannot be utilized. Slip tube expansion joints are acceptable but not preferred over externally pressurized bellows joints.

67. Provide check valves and test valves at all steam condensate drip traps.

68. Base operating steam pressure is approximately 90 psi.

69. Specify steam control valve actuators that can withstand heat conducted from steam lines and equipment. Do not specify, or approve, hydraulic powered actuators in steam applications.

70. Install blow down valves on all strainers.

71. It is preferred to distribute hot water thru out building or building complex for heating in lieu of direct steam heat.

72. Insulate pipes with rigid insulation where pipes are subjected to being stepped on or damaged; calcium silicate or cellular glass insulation is preferred.

73. Specify flange gaskets to be metal spiral wound metal ASME B16.20.

74. Pump Packages: If specifying a pump package, designer must work out general lay out of package and mechanical room to ensure maintenance access.

75. All steam pressure powered pumps (PPP) for shall have a direct acting pressure regulator on the motive steam. Provide pressure gages on the motive steam line and the condensate collection system.

76. Use welded valves in steam pits. Inside buildings, flanged valves are permitted.

77. Use link seals on steam and condensate piping where they penetrate manhole walls.

May 2002

Seismic Design for Mechanical Systems

The forces exerted by an earthquake on a structure, or, more specifically, the mechanical systems within a building can be in any direction. However, since every building, and mechanical system support, is designed to take care of the vertical, or gravity, loads, the main emphasis for seismic design is in the control of horizontal forces exerted during a seismic event. The vertical load component for equipment is its operating weight. For ducts and pipes, the vertical load component includes the weight of the duct or pipe and the contained fluid.

The design of structural seismic restraints for mechanical systems assumes the building is designed to respond safely during earthquake events. The restraints' primary function is to insure the mechanical systems do not break away, but move with the building during an earthquake.

Because the direction of forces during an earthquake are unpredictable, and can be in any direction, it is important to provide restraint in the X, Y, and Z directions; vertically, laterally (transverse), and longitudinally. Together, transverse and longitudinal bracing with vertical (gravity) supports will resist seismic loads in all directions. The bracing that will be referenced in this guidance will provide for the additional members required to resist the horizontal forces during an earthquake.

Code references in this guidance are based on the policy established by Planning and Design Policy Statement 95-02, which adopted the International Mechanical Code (IMC) as NAVFAC's sole mechanical code. The IMC is published by three entities in the United States including: the Building Officials and Code Administrators International, Inc. (BOCA), the International Conference of Building Officials (ICBO), and the Southern Building Code Congress International, Inc. (SBCCI). Use of these U.S. Codes for projects outside the continental U.S. is contingent upon the engineer to determine it to be more strict than what the local requires; standard procedure requires the engineer to apply the strictest of U.S. and local codes in foreign countries.

- ## Seismic Bracing for Pipe and Duct

  All building codes, including BOCA, require most structures to be designed for a horizontal seismic force. The formulas to determine the horizontal seismic force are in the form of:

  $$Fp = Cs * Wp$$

  where:

	Fp	=	seismic force
	Cs	=	seismic coefficient
	Wp	=	weight of the ducts or pipes

  Horizontal seismic forces may also is expressed as a percentage of the weight of the elements being braced. It is this percentage that correlates to a design nation utilized by SMACNA called the "Seismic Hazard Level" (SHL) that will be addressed later and is fully explained in "Appendix A" of the SMACNA Restraint Manual, Second Edition. The codes have formulas for calculating the percentage horizontal seismic force based on the seismic zone, the importance factor, and the type construction.

  The percent horizontal seismic factor is expressed as:

  $$\%F = [Fp \div Wp] * 100$$

and: $Cs = [Fp \div Wp]$

$= Cs * 100$

More specifically, the formula in the IMC and used in the Building Officials and Code Administrators International, Inc. (BOCA **)**, National Building Code, 1996, Chapter 16 to determine the seismic force is:

$$Fp = Av * Cc * P * Ac * Wc$$

where:
- Av = Figure 1610.1.3(1)
- Cc = Figure 1610.6.4(1)
- P = Figure 1610.6.4(1); requires determination of "SHEG"
- SHEG = Seismic Hazard Exposure Group, Table 1610.1.5
- Ac = Figure 1610.6.4(2)

Conveniently, the percent horizontal seismic factor is expressed as:

$\%F = [Fp \div Wc] * 100$

$= [Av * Cc * P * Ac] * 100$

The "Seismic Hazard Level", SHL, designation was developed specifically for the SMACNA Restraint Manual, Second Edition. It is a designation of "A", "B", or "C" that combines s everal building codes, seismic zones, and other factors into a single system for determining appropriate restraints. SHL's are established by prescribed limits of resistive force as a percentage of weight of the ducts and pipes and correlate to the percent horizontal seismic factors, (%F), determined by building code formulas. The prescribed limits for the SHL's are with "A" being the most stringent, and "C" the least:

- Most stringent; covers buildings most vulnerable due to the strength of seismic events . The bracing for SHL "A" is designed to resist 48% of the weight of the ducts or pipes. If %F is = 48, then use SHL "A". If %F is > 48, the SMACNA Restraint Manual, Second Edition, cannot be used.

- The bracing for SHL "B" is designed to resist 30% of th e weight of the ducts or pipes. If %F is = 30, then use SHL "B".

- Least stringent; covers buildings least vulnerable due to the strength of seismic events. The bracing for SHL "C" is designed to resist 15% of the weight of the ducts or pipes. If %F is = 15, then use SHL "C".

Determination of the SHL for a specific project is fundamental, and indeed the first step in the use of the SMACNA Restraint Manual, Second Edition . The bracing detailed in the SMACNA Restraint Manual, Second Edition provides for the additional members needed to resist horizontal forces in pipe and duct systems. It does not cover seismic restraints for equipment. All in-line equipment must be braced independently of all the ducts or pipes and in conformance with all applicable buildi ng codes. Additionally, SMACNA does not consider forces due to thermal expansion; seismic bracing referenced here is not intended to handle forces imposed by thermal expansion.

Steps in the Use of SMACNA Sizing Tables:

Step 1. Determine the Seismic Hazard Level (SHL). *The determination of the SHL requires familiarity with the earthquake design portion of the building codes, and **shall not** be left up to a contactor to establish; the design engineer **must** specify the SHL in the contract documents.*

The SHL for each Seismic Hazard Exposure Group (see Table 1610.1.5, National Building Code, 1996, Chapter 16) within a specific geographic location in the LANTNAVFACENGCOM jurisdiction are presented in Table 1, entitled "SHL Factors".

Table 1

Seismic Hazard Level (SHL) Factors

Geographic Location	Seismic Hazard Exposure Group (SHEG) (Note 1)	Factors					Seismic Hazard Level (SHL)	
		Av	Cc		P	Ac	Duct & Non-Hazardous Pipe	Gas & Hazardous Pipe
			Duct & Non-Haz Pipe	Gas & Haz Pipe Boilers (Note 2)				
Tidewater Virginia	I	0.05	0.67	2.0	0.5	1.0	C	B
	II	0.05	0.67	2.0	1.0	1.0	C	B
	III	0.05	0.67	2.0	1.5	1.0	C	B
MCAS Cherry Point	I	0.10	0.67	2.0	0.5	1.0	C	B
MCB Camp Lejeune	II	0.10	0.67	2.0	1.0	1.0	C	B
MCAS New River	III	0.10	0.67	2.0	1.5	1.0	C	B
Sugar Grove, WVA	I	0.05	0.67	2.0	0.5	1.0	C	B
	II	0.05	0.67	2.0	1.0	1.0	C	B
	III	0.05	0.67	2.0	1.5	1.0	C	B
Puerto Rico	I	0.20	0.67	2.0	0.5	1.0	C	(Note 3)
	II	0.20	0.67	2.0	1.0	1.0	C	(Note 3)
	III	0.20	0.67	2.0	1.5	1.0	B	(Note 3)
Naples, Italy	I	0.15	0.67	2.0	0.5	1.0	C	A
	II	0.15	0.67	2.0	1.0	1.0	C	A
	III	0.15	0.67	2.0	1.5	1.0	B	A
Sigonella, Italy	I	0.40	0.67	2.0	0.5	1.0	C	(Note 3)
	II	0.40	0.67	2.0	1.0	1.0	B	(Note 3)
	III	0.40	0.67	2.0	1.5	1.0	A	(Note 3)
Aviano AFB, Italy	I	0.15	0.67	2.0	0.5	1.0	C	A
	II	0.15	0.67	2.0	1.0	1.0	C	A
	III	0.15	0.67	2.0	1.5	1.0	B	A
Iceland	I	0.40	0.67	2.0	0.5	1.0	C	(Note 3)
	II	0.40	0.67	2.0	1.0	1.0	B	(Note 3)
	III	0.40	0.67	2.0	1.5	1.0	A	(Note 3)

Notes:

(1) See Table 1610.1.5, the BOCA National Building Code f or Seismic Hazard Exposure Group classifications

(2) Includes boilers, furnaces, incinerators, water heaters, and other equipment utilizing combustible energy sources

(3) The horizontal seismic factor percentage exceeds 50%; SMACNA Restraint Manual, Second Edition, cannot be used.

Step 2. Check the structural system to determine the type structure from which ducts and pipes are supported. If SHL "A" has been specified, determine the connection level.

- When working in SHL "A", one of two con nection levels to the supporting structure must be selected.
    - Connection Level "2" is the most strict condition.
        - Must be used in the State of California within the jurisdiction of OSHPD (California hospitals) and the Office of the State Architect (OSA)(California schools).
        - Conservatively, use this connection level for any area of structural concrete.
    - Use of Connection Level "1" may be used if it is substantiated. May be used anywhere except when connecting into concrete within the jurisdiction of OSHOD (California hospitals) and the Office of the State Architect (OSA)(California schools).

Step 3. Find the detail in the SMACNA Restraint Manual, Second Edition (Chapter 4), which corresponds to the type duct or pipe restraint required. Notes in the detail will refe r to the table where member sizes and connections can be found.

Step 4. Determine which chapter of the SMACNA Restraint Manual, Second Edition provides the table for the SHL for your specific project.

- For SHL "A", use Chapter 5.
- For SHL "B", use Chapter 6.
- For SHL "C", use Chapter 7.

Step 5. In the chapter determined by Step 4, find the table referred to in the detail from Chapter 4 of the SMACNA Restraint Manual, Second Edition by Step 3.

Step 6. In the first column, find the duct or pipe size. If the exact size is not liste d, use the next larger size. Ducts are assumed to be of SMACNA standard construction and pipes are assumed to be Schedule 40 water pipes. If pipes are insulated or of heavy construction, the weight of the duct or pipe must be determined and the "weight column" in the tables must be used to select the proper braces.

Step 7. Once the appropriate row in the table has been found, move to the right to read the size requirements for the hangers, braces and bolts.

Step 8. In the same row, under the column "Connection Type to Structural Member", find the connection type designated by a capital letter (A through H). For SHL "A", use the connection level determined in Step 2 to find the connection type.

Step 9. Find the connection type in the first column in Table 8 -1 in Chapter 8 of the SMACNA Restraint Manual, Second Edition. Move to the right in the same row to find sizes for the expansion anchors, bolts, spreader sizes, and angle connectors for connecting to the supporting structure.

Step 10. Find a detail in Chapter 8 of the SMACNA Restraint Manual, Second Edition that corresponds to your connection type and to your type of supporting structural system. Install transverse and longitudinal seismic braces at the intervals specified in the general requirements for ducts in Chapter 3 or the t ables for pipes in Chapters 5, 6, or 7 of the SMACNA Restraint Manual.

• Seismic Bracing for HVAC Equipment

As with the design of seismic bracing of pipe and duct, the initial step to design restraints for HVAC equipment is to consult the appropriate code. Here, the same code references apply, specifically, Chapter 16 of the Building Officials and Code Administrators International, Inc. (BOCA **)**, National Building Code, 1996.

The BOCA Code provides a seismic force formula to determine the horizontal seismic static force acting at the center of gravity of HVAC equipment. That formula takes the form of:

$$Fp = Av * Cc * P * Ac * Wc$$

where:	Av	=	Figure 1610.1.3(1)
	Cc	=	Figure 1610.6.4(1)
	P	=	Figure 1610.6.4(1); requires determination of "SHEG"
	SHEG	=	Seismic Hazard Exposure Group, Table 1610.1.5
	Ac	=	Figure 1610.6.4(2)

Once the seismic force (Fp) is determine d, the seismic loads at the connection between the equipment and the building must be resolved. Static load calculations will be required and examples showing how to compute the loads may be found in the ASHRAE Handbook, HVAC Applications and the ASHRAE, A Practical Guide to Seismic Restraint .

Seismic restraint of HVAC equipment will depend on how the equipment is isolated and whether it is supported on the floor, or from the wall, or overhead.

• Seismic Design Requirements

- **General Requirements:**

  Use either cable or solid bracing for all situations. Do not mix bracing types.

  All runs must have a minimum of two transverse braces and on longitudinal brace. A run is defined as a length of duct or pipe without any change in direction except as allowed by offsets (see Chapter 4 of the SMACNA Restraint Manual, Second Edition).

- **Duct Bracing:**

  Brace all ducts with a cross-sectional area of 0.56 sm (6 ft²), or greater; Rectangular ductwork less than 0.56 sm (6 ft²) in cross-section does not require seismic restraint.

  Round duct less than 710 mm (28”) diameter does not require seismic restraint.

  Brace flat oval ducts in the same manner as rectangular ducts.

  No bracing is required if the duct is suspended by hangers 305 mm (12”), or less, in length, as measured from the top of the duct to the bottom of the support where the hanger is attached.

  Hangers must be attached to the duct within 50 mm (2”) of the top of the duct with a minimum of two M5 x 0.8 (#10) sheet metal screws.

  Transverse bracing must occur at intervals specified in tables in Chapters 5, 6, and 7, of the SMACNA Restraint Manual, Second Edition or at both ends if the duct run is less than the specified interval. Transverse bracing will be installed at each duct turn and at each end of the duct run, with a minimum of one brace at each end.

  Longitudinal bracing must occur at the interval specified in tables in Chapters 5, 6, and 7 of the SMACNA Restraint Manual, Second Edition, with at least one brace per duct run. Transverse bracing for one duct section may also act as a longitudinal brace for a duct section at 90º turns if the bracing is installed within two times the duct width of the intersection of both ducts and the bracing is sized for the larger duct (see Figure 4-1, Chapter 4 of the SMACNA Restraint Manual, Second Edition).

  A group of ducts may be combined in a larger frame so that the combined weights and dimensions of the ducts are less than or equal to the maximum weight and dimensions of the duct for which bracing details are selected.

  Example: To brace a 760 mm x 760 mm (30”x30”) duct adjacent to a 1370 mm x 710 mm (54”x28”) duct, select bracing for an 2134 mm x 1067mm (84”x42”) duct. The horizontal dimension of the 2134 mm x 1067 mm (84”x42”) duct is equal to that of the combined ducts and its weight is greater than their combined weights.

  Walls, including gypsum board non-load bearing partitions that have ducts running through them, may replace a typical transverse brace. Provide solid blocking around duct penetrations at all stud wall construction.

  Unbraced ducts must be installed with a 150 mm (6”) minimum clearance to vertical ceiling hanger wires.

- **Pipe Bracing:**

  Brace all fuel oil, natural gas, medical gas, and compressed air piping in accordance with local codes.

  Brace all piping located in boiler, mechanical equipment, and refrigeration mechanical rooms that is 32 mm (1¼”) nominal diameter and greater.

  Brace all pipes 65 mm (2½”) nominal diameter and greater.

Piping suspended by individual hangers 305 mm (12”), or less, in length (as measured from the top of the pipe to the bottom of the support where the hanger is attached) need not be braced. For pipes on a trapeze, the 305 mm (12”) exception is measured from the upper face of the horizontal structure member (or the bottom of the pipe).

Transverse bracing must be at 12-meter (40 ft) minimum intervals, except where a lesser spacing is indicated in the tables for pipe bracing.

Longitudinal bracing must be at 24-meter (80 ft) minimum intervals, except where a lesser spacing is indicated in the tables.

For gas piping, the bracing details, schedules, and notes may be used, except that transverse and longitudinal bracing will be at one-half the spacing shown in the tables in Chapter 5 of the SMACNA Restraint Manual, Second Edition. Provide seismic automatic shut-off valves where required by NAVFAC Specifications 15195N, Natural Gas Piping, and 02556a, Gas Distribution Systems.

Transverse bracing for one pipe section may also act as the longitudinal brace for a pipe section of the same size at a 90º turn if the bracing is installed within 610 mm (24”) of the elbow as long as the brace is sized as a longitudinal brace (see Figure 4-1 of the SMACNA Restraint Manual, Second Edition).

Provide joints capable of accommodating seismic movements where pipes pass through building seismic or expansion joints or where rigidly supported pipes connect to equipment with vibration isolators. The joints must allow movement in all directions.

Branch lines may not be used to brace main lines.

Cast iron pipe of all types, glass pipe, and any other pipe joined with a shield and clamp assembly, where the top of the pipe is 610 mm (24”), or more, from the supported structure, must be braced on each side of the change in direction of 90º or more. Riser joints must be braced or stabilized between floors.

Vertical risers not specifically engineered must be laterally supported with a riser clamp at each floor. For buildings greater than six floors, all risers must be engineered individually. For risers in hubless piping systems where the riser joints are unsupported between floors, see Figure 9-10 of the SMACNA Restraint Manual, Second Edition for brace.

- **HVAC Equipment Bracing:**

  Mechanical equipment less than 181 kg (400 lbs) does not require seismic restraint.

  - **Seismic Restraint of Equipment without Vibration Isolators:**

    Seismic restraint of floor-mounted equipment without vibration isolation is most straightforward and easiest to address. Such equipment, like tube heat exchangers and storage tanks, without moving parts are simply bolted to the floor. Equipment, such as exhaust fans and small pumps, mounted in non-vibration sensitive locations may also be simply bolted to the floor or slab. The calculated seismic force determines the specific means of anchorage. The engineered anchorage must address the type and size of the anchor bolts, with particular attention given to the clearance around the bolt. Excessive clearances

between bolts and equipment may lead to anchor failure due to shear during earthquakes. Neoprene grommets or epoxy fillers should be used fill the clearances. Anchorage to steel, wood and concrete requires additional considerations:

- Anchorage to steel: Consult the "American Institute of Steel Construction Manual" for the actual strength of the anchor bolts.

- Anchorage to wood: The strength of an anchor to wood depends on the type and grade of wood as well as the embedment. Generally, a 15 mm (1/2") to 20 mm (3/4") diameter lag bolt with a depth of 50 mm (2") to 75 mm (3") provides adequate anchorage.

- Anchorage to concrete: Set-in-concrete anchor bolts are not practical. Use post drill anchors where practical. ASHRAE, A Practical Guide to Seismic Restraint provides specific information on their use. Anchorage for large equipment (>11 metric tons) in high seismic zones may make the use of numerous post drill anchors impractical. Other solutions may include the connection of embedment plates to structural elements of a reinforced slab.

Bracing of non-vibration isolated, suspended equipment such as small in-line pumps, fan coils, mixing boxes, water source heat pumps and the like, involves nothing more than to keep the equipment from swaying into adjacent equipment, pipes, ducts or structure. Anti-sway bracing may be accomplished by use of slack cables or steel struts. ASHRAE recommends use of prestretched aircraft quality cable. Additional information can be found in ASHRAE, A Practical Guide to Seismic Restraint.

- **Seismic Restraint of Equipment with Vibration Isolators:**

Seismic restraint for equipment mounted on vibration isolators is more complex since the isolators tend to amplify seismic forces. Amplification occurs because vibration isolators usually have the same natural resonant frequency as an earthquake energy peak. To quell the amplified movement of equipment on vibration isolators, snubbing devices or sway braces are employed. Considerations on the use of snubbers and sway braces include:

- Clearances around snubbers should be about 6 mm (1/4"). Larger gaps will permit high inertia forces that will increase load on equipment. Smaller gaps could hinder the effectiveness of vibration isolators.

- Chillers and boilers, etc. can be directly mounted on seismic snubbers with built-in vibration isolators.

- Floor mounted, lightweight equipment not having adequate stiffness may require supplemental structural bases to prevent buckling at snubbers. Most airside equipment falls in this category.

- Floor mounted pumps may require concrete bases to control distortion to bearings, couplings and seals when point mounted on vibration isolators.

- For adequate stiffness, concrete base thickness should be $1/12^{th}$ of the maximum span between isolators, but no less than 150 mm (6"). The depth of structural members in steel bases should be $1/10^{th}$ of the maximum span between isolators, but no less than 100 mm (4").

- Many manufacturers employ internal isolators in their equipment. Because the unit casings are commonly lightweight sheet metal, they are not structurally adequate to incorporate snubbing devices, or there is not adequate clearance within the case to prevent contact between components. ASHRAE recommends cautious use of internal seismic mountings and snubbers and only with written guarantees from the equipment manufacturer or from an independent certified test.

- Use snubber devices on wall-mounted equipment such as propeller fans, some air handling units and exhaust fans, if equipped with vibration isolators.

- Sway bracing consisting of slack cable is required for suspended HVAC equipment to prevent the pendulum effect; a rigid sway brace of channel or angle steel would cause transfer of vibration to the structure.

  Sway bracing cable may be attached to the top of bottom of the unit and at least for cables per unit will be required for proper seismic restraint.

  When employing the sway bracing cable system, particular attention must be paid to the cable connection to the building structure. Consult ASHRAE, A Practical Guide to Seismic Restraint for specific guidance.

• Drawing Requirements

Seismic restraint detailing for mechanical and plumbing systems, complete and appropriate for the project location and seismic hazard exposure group, shall be provided on the contract drawings. It shall be incumbent upon the A& E to determine the Seismic Hazard Level (SHL) factor and to clearly indicate the determination on the mechanical and plumbing contract drawings.

Enclosure (1)

BEST VALUE DETERMINATION GUIDELINES
$3,000 - $100,000

(Schedule Purchases are subject to FAR 8.4, DFARS 208.4, and DFARS PGI Supplement 208.405-70)

- FAR 8.4 required that you make a best value determination before placing Multiple Award Schedule (MAS) orders above the micro-purchase limit (currently $3,000).
- The Navy Furniture BPAs shall be the primary source for FF&E. Refer to Specification Section E20.
- For orders between $3,000 and $100,000, review pricing from at least three sources and UNICOR. (FAR 8.405-1(c))
- Seek additional price discounts from the contractor offering the best value. (FAR 8.405-1(d))

1. Brief Description of Item, System or Component to be Procured:

2. Did you review the required number of sources under the BPA and/or Federal Supply Schedule? YES ☐ NO ☐

3. Identify the Navy Furniture BPA or other Federal Supply Schedule utilized or indicate not applicable.

4. Was UNICOR included in the review? YES ☐ NO ☐

5. List the name(s) and contract number(s) of contractor(s) who were considered:

List three or more contractors' names, contract numbers and business size reviewed.

6. Identify the contractor recommended as the best value.

7. When you sought additional price reductions, were they received? YES ☐ NO ☐

8. Identify price with discounts for the recommended best value contractor.

9. Is installation, site preparation, design or ancillary services included in this project? YES ☐ NO ☐ If yes, be sure that the installation, site preparation, design or ancillary services are included as separate line items in each quote.

10. Are you selecting the lowest priced item? YES ☐ NO ☐ If no, indicate in addition to price, those factors listed below, considered in your decision.

- ☐ Price
- ☐ Special features required in effective program performance:
- ☐ Trade-in considerations
- ☐ Probable life of the item selected as compared with that of a comparable item: .
- ☐ Warranty considerations:
- ☐ Maintenance availability
- ☐ Past performance
- ☐ Environmental and energy efficiency considerations
- ☐ Comfort/suitability of the item:
- ☐ Delivery terms
- ☐ Your administrative costs
- ☐ Training needed or provided
- ☐ Technical qualifications
- ☐ Compatibility with existing furniture / Products / Technology (circle appropriate category)
- ☐ Other (*specify*):

11.
Best Value Determination:
A narrative justification for each box checked above for other than low price selection must be attached. Describe the evaluation factor, how the recommended best value contractor's offer met or exceeded the standard for each factor, and why the offeror represents the best value to the Government compared to the other offerors.

SUBMITTING OFFICIAL (PRIME CONTRACTOR'S INTERIOR DESIGNER)
In accordance with FAR 8.404(b), all agency specific regulations and statutes applicable to this purchase are attached. I have reviewed the findings and documentation attached and I have affirmatively determined them to be complete and accurate.

Name:_____Title: _____ Date: _____

Telephone: _____ Email: _____

Signature:_____

Enclosure (2)

BEST VALUE DETERMINATION GUIDELINES
Greater than $100,000

(Schedule Purchases are subject to FAR 8.4, DFARS 208.4, and DFARS PGI Supplement 208.405-70)

- FAR 8.4 required that you make a best value determination before placing Multiple Award Schedule (MAS) orders above the micro-purchase limit (currently $3,000).
- The Navy Furniture BPAs shall be the primary source for FF&E. Refer to Specification Section E20.
- For orders greater than $100,000, all BPA holders for the applicable schedule shall be given an opportunity to compete for the requirement. In addition, UNICOR shall also be solicited. (DFARS PGI 208.405-70)
- Seek additional price discounts from the contractor offering the best value. (FAR 8.405-1(d))

1. Brief Description of Item, System or Component to be Procured:

2. Were all BPA holders and/or Federal Supply Schedule holders given the opportunity to propose on the requirement?
YES ☐ NO ☐

3. Identify the Navy Furniture BPA or other Federal Supply Schedule utilized or indicate not applicable.

4. Was UNICOR included in the review? YES ☐ NO ☐

5. Provide evidence of affording all BPA holder and/or Federal Supply Schedule holders the opportunity to compete. Also, provide evidence that UNICOR was solicited.

6. List the name(s) and contract number(s) of contractor(s) who responded to the request for proposal for this requirement:
List contractors' names, contract numbers and business size for those who responded.

7. Provide copies of all quotes received and reviewed.

8. Identify the contractor recommended as the best value.

9. When you sought additional price reductions, were they received? YES ☐ NO ☐

10. Identify price with discounts for the recommended best value contractor.

11. Is installation, site preparation, design or ancillary services included in this project? YES ☐ NO ☐
If yes, be sure that the installation, site preparation, design or ancillary services are included as separate line items in each quote.

12. Are you selecting the lowest priced item? YES ☐ NO ☐
If no, indicate in addition to price, those factors listed below, considered in your decision.

- ☐ Price
- ☐ Special features required in effective program performance:
- ☐ Trade-in considerations
- ☐ Probable life of the item selected as compared with that of a comparable item: .
- ☐ Warranty considerations:
- ☐ Maintenance availability
- ☐ Past performance
- ☐ Environmental and energy efficiency considerations
- ☐ Comfort/suitability of the item:
- ☐ Delivery terms
- ☐ Your administrative costs
- ☐ Training needed or provided
- ☐ Technical qualifications
- ☐ Compatibility with existing furniture / Products / Technology (circle appropriate category)
- ☐ Other (*specify*):

13.
Best Value Determination:
A narrative justification for each box checked above for other than low price selection must be attached. Describe the evaluation factor, how the recommended best value contractor's offer met or exceeded the standard for each factor, and why the offeror represents the best value to the Government compared to the other offerors.

SUBMITTING OFFICIAL (PRIME CONTRACTOR'S INTERIOR DESIGNER)
In accordance with FAR 8.404(b), all agency specific regulations and statutes applicable to this purchase are attached. I have reviewed the findings and documentation attached and I have affirmatively determined them to be complete and accurate.

Name:_____Title: _____ Date: _____

Telephone: _____ Email: _____

Signature:_____

Enclosure (1)

BEST VALUE DETERMINATION GUIDELINES
$3,000 - $100,000

(Schedule Purchases are subject to FAR 8.4, DFARS 208.4, and DFARS PGI Supplement 208.405-70)

- FAR 8.4 required that you make a best value determination before placing Multiple Award Schedule (MAS) orders above the micro-purchase limit (currently $3,000).
- The Navy Furniture BPAs shall be the primary source for FF&E. Refer to Specification Section E20.
- For orders between $3,000 and $100,000, review pricing from at least three sources and UNICOR. (FAR 8.405-1(c))
- Seek additional price discounts from the contractor offering the best value. (FAR 8.405-1(d))

1. Brief Description of Item, System or Component to be Procured:

2. Did you review the required number of sources under the BPA and/or Federal Supply Schedule? YES ☐ NO ☐

3. Identify the Navy Furniture BPA or other Federal Supply Schedule utilized or indicate not applicable.

4. Was UNICOR included in the review? YES ☐ NO ☐

5. List the name(s) and contract number(s) of contractor(s) who were considered:

List three or more contractors' names, contract numbers and business size reviewed.

6. Identify the contractor recommended as the best value.

7. When you sought additional price reductions, were they received? YES ☐ NO ☐

8. Identify price with discounts for the recommended best value contractor.

9. Is installation, site preparation, design or ancillary services included in this project? YES ☐ NO ☐ If yes, be sure that the installation, site preparation, design or ancillary services are included as separate line items in each quote.

10. Are you selecting the lowest priced item? YES ☐ NO ☐ If no, indicate in addition to price, those factors listed below, considered in your decision.

- ☐ Price
- ☐ Special features required in effective program performance:
- ☐ Trade-in considerations
- ☐ Probable life of the item selected as compared with that of a comparable item: .
- ☐ Warranty considerations:
- ☐ Maintenance availability
- ☐ Past performance
- ☐ Environmental and energy efficiency considerations
- ☐ Comfort/suitability of the item:
- ☐ Delivery terms
- ☐ Your administrative costs
- ☐ Training needed or provided
- ☐ Technical qualifications
- ☐ Compatibility with existing furniture / Products / Technology (circle appropriate category)
- ☐ Other (*specify*):

11.
Best Value Determination:
A narrative justification for each box checked above for other than low price selection must be attached. Describe the evaluation factor, how the recommended best value contractor's offer met or exceeded the standard for each factor, and why the offeror represents the best value to the Government compared to the other offerors.

SUBMITTING OFFICIAL (PRIME CONTRACTOR'S INTERIOR DESIGNER)
In accordance with FAR 8.404(b), all agency specific regulations and statutes applicable to this purchase are attached. I have reviewed the findings and documentation attached and I have affirmatively determined them to be complete and accurate.

Name:_____Title: _____ Date: _____

Telephone: _____ Email: _____

Signature:_____

CUSTOMER REPRESENTATIVE
I have reviewed the agency findings and documentation supplied and I have affirmatively determined them to be in the best interest of the Government.

Name:_____Title: _____ Date: _____

Telephone: _____ Email: _____

Signature:_____

BASE PROPERTY OFFICER
I have reviewed the agency findings and documentation supplied and I have affirmatively determined them to be in the best interest of the Government.

Name:_____Title: _____ Date: _____

Telephone: _____ Email: _____

Signature:_____

SUBMITTING OFFICIAL**
In accordance with FAR 8.4, all agency specific regulations and statutes applicable to this requirement are attached. I have reviewed the findings and documentation attached and I have affirmatively determined them to be complete and accurate.

Name:_____Title: _____ Date: _____

Telephone: _____ Email: _____

Signature:_____

CONTRACTING OFFICER
I have reviewed the agency findings and documentation supplied and I have affirmatively determined them to be in the best interest of the Government.

Name:_____Title: _____ Date: _____

Telephone: _____ Email: _____

Signature:_____

** This should be the Contracting Officer's Technical Representative, Project Manager or a Receiving Officer.

Enclosure (2)

BEST VALUE DETERMINATION GUIDELINES
Greater than $100,000

(Schedule Purchases are subject to FAR 8.4, DFARS 208.4, and DFARS PGI Supplement 208.405-70)

- FAR 8.4 required that you make a best value determination before placing Multiple Award Schedule (MAS) orders above the micro-purchase limit (currently $3,000).
- The Navy Furniture BPAs shall be the primary source for FF&E. Refer to Specification Section E20.
- For orders greater than $100,000, all BPA holders for the applicable schedule shall be given an opportunity to compete for the requirement. In addition, UNICOR shall also be solicited. (DFARS PGI 208.405-70)
- Seek additional price discounts from the contractor offering the best value. (FAR 8.405-1(d))

1. Brief Description of Item, System or Component to be Procured:

2. Were all BPA holders and/or Federal Supply Schedule holders given the opportunity to propose on the requirement?
YES ☐ NO ☐

3. Identify the Navy Furniture BPA or other Federal Supply Schedule utilized or indicate not applicable.

4. Was UNICOR included in the review? YES ☐ NO ☐

5. Provide evidence of affording all BPA holder and/or Federal Supply Schedule holders the opportunity to compete. Also, provide evidence that UNICOR was solicited.

6. List the name(s) and contract number(s) of contractor(s) who responded to the request for proposal for this requirement:
List contractors' names, contract numbers and business size for those who responded.

7. Provide copies of all quotes received and reviewed.

8. Identify the contractor recommended as the best value.

9. When you sought additional price reductions, were they received? YES ☐ NO ☐

10. Identify price with discounts for the recommended best value contractor.

11. Is installation, site preparation, design or ancillary services included in this project? YES ☐ NO ☐
If yes, be sure that the installation, site preparation, design or ancillary services are included as separate line items in each quote.

12. Are you selecting the lowest priced item? YES ☐ NO ☐
If no, indicate in addition to price, those factors listed below, considered in your decision.

- ☐ Price
- ☐ Special features required in effective program performance:
- ☐ Trade-in considerations
- ☐ Probable life of the item selected as compared with that of a comparable item: .
- ☐ Warranty considerations:
- ☐ Maintenance availability
- ☐ Past performance
- ☐ Environmental and energy efficiency considerations
- ☐ Comfort/suitability of the item:
- ☐ Delivery terms
- ☐ Your administrative costs
- ☐ Training needed or provided
- ☐ Technical qualifications
- ☐ Compatibility with existing furniture / Products / Technology (circle appropriate category)
- ☐ Other (*specify*):

13.
Best Value Determination:
A narrative justification for each box checked above for other than low price selection must be attached. Describe the evaluation factor, how the recommended best value contractor's offer met or exceeded the standard for each factor, and why the offeror represents the best value to the Government compared to the other offerors.

SUBMITTING OFFICIAL (PRIME CONTRACTOR'S INTERIOR DESIGNER)
In accordance with FAR 8.404(b), all agency specific regulations and statutes applicable to this purchase are attached. I have reviewed the findings and documentation attached and I have affirmatively determined them to be complete and accurate.

Name:_____Title: _____ Date: _____

Telephone: _____ Email: _____

Signature:_____

CUSTOMER REPRESENTATIVE
I have reviewed the agency findings and documentation supplied and I have affirmatively determined them to be in the best interest of the Government.

Name:_____Title: _____ Date: _____

Telephone: _____ Email: _____

Signature:_____

BASE PROPERTY OFFICER
I have reviewed the agency findings and documentation supplied and I have affirmatively determined them to be in the best interest of the Government.

Name:_____Title: _____ Date: _____

Telephone: _____ Email: _____

Signature:_____

SUBMITTING OFFICIAL**
In accordance with FAR 8.4, all agency specific regulations and statutes applicable to this requirement are attached. I have reviewed the findings and documentation attached and I have affirmatively determined them to be complete and accurate.

Name:_____Title: _____ Date: _____

Telephone: _____ Email: _____

Signature:_____

CONTRACTING OFFICER
I have reviewed the agency findings and documentation supplied and I have affirmatively determined them to be in the best interest of the Government.

Name:_____Title: _____ Date: _____

Telephone: _____ Email: _____

Signature:_____

** This should be the Contracting Officer's Technical Representative, Project Manager or a Receiving Officer.

NAVAL FACILITIES ENGINEERING COMMAND MID-ATLANTIC SHEET:
DATE:

PROJECT: **ITEM CODE:**
BASE/CITY/STATE:
ITEM:

BPA CONTRACT #: **EXPIRATION DATE:**
GSA CONTRACT #:
MANUFACTURER: **ORDERING ADDRESS:**

LOCAL REP CONTACT INFO:

ANY VARIANCE OR MODIFICATION OF THIS SPECIFICATION WILL BE COORDINATED THROUGH NAVFAC MID-ATLANTIC

NAVFAC ID CONTACT:
PROJECT ID CONTACT:

DESCRIPTION:	QTY:	UNIT COST:	TOTAL COST:
TOTAL:			

ROOM LOCATIONS: **ENVIRONMENTAL CERTIFICATIONS:**
QTY **ROOM NUMBER**

REMARKS:

ITEM PHOTO/FINISH SAMPLES

NAVAL FACILITIES ENGINEERING COMMAND MID-ATLANTIC
FURNITURE, FIXTURES & EQUIPMENT (FF&E) ESTIMATED COST SUMMARY

BASE:

PROJECT: **DATE:**

CODE	QTY	ITEM DESCRIPTION	MANUFACTURER	UNIT COST	TOTAL
				SUBTOTAL	
		Misc. (5%)			
		Shipping (6%)			
		Installation (13%)			
				TOTAL	

LOW IMPACT DEVELOPMENT
NAVY GUIDANCE DOCUMENT

PREDECISIONAL DRAFT – AUGUST 2009

TO ASSIST IN THE IMPLEMENTATION OF

UNIFIED FACILITIES CRITERIA
(UFC 3-210-10)

DISTRIBUTION STATEMENT A: NOT FOR PUBLIC RELEASE;
DISTRIBUTION IS LIMITED

Abstract:

LOW IMPACT DEVELOPMENT - NAVY GUIDANCE DOCUMENT

PREDECISIONAL DRAFT - AUGUST 2009

Recent legislative action and Navy Directive has mandated a change to the Navy's methods for handling stormwater runoff for new facilities and redevelopment projects with a stormwater component. The new policy will require a "no net increase" in stormwater leaving the project site to the maximum extent feasible, and mitigation of sediments and temperature in the excess runoff.

In order to meet these goals, the Navy has updated the "Low Impact Development" criteria document (UFC 3-210-10). Low Impact Development (LID) refers to a methodology that has been developed to mimic the predevelopment hydrologic condition of a project site. Development of a site invariably increases the volume of stormwater runoff and deceases the time that the water takes to reach the outfall from the site. By calculating the anticipated stormwater runoff for the pre- and post-development conditions, the site designer may control the excess runoff through a series of Integrated Management Practices (IMP) that hold, filter, and infiltrate the stormwater (or reuse it elsewhere).

This document is a companion to the new UFC criteria. It provides additional detail and analysis supporting the criteria presented in the UFC and builds process action steps in the Planning, Design, and post-construction stages of project development. In addition, the document gives a basic level of understanding for the rational behind the UFC criteria hydrology and methods of calculation.

The UFC LID criteria are predicated on standard practices in the field of stormwater management. The design storm event is defined by the 95th percentile storm. By averaging all storm events that occur within 24 hours for several years, the designer can statistically predict the storm depth that is equal to or less than 95 percent of all storms (and this equates to the level at which runoff will begin on an undeveloped site). By retaining the stormwater for this storm and those less severe, the site will mimic its predevelopment condition. The Soil Conservation Services TR-55 methodology is used for designing LID volumes. A site designer can easily hand calculate the necessary information for small sites using formulas given in the criteria. For larger sites, computer calculations and simulation modeling are encouraged.

The criterion given herein is to be used to determine the minimum level of effort needed to meet the goals of LID. It is not intended to supplant the stormwater regulations currently in place. The site designer is encouraged to seek the assistance of the regulatory agency and Navy points of contact applicable for their region. By design, LID methods do not control runoff in excess of the pre-development condition, but are intended to bypass larger storm volumes to flood control measures as defined by the conventional stormwater management techniques. LID is in addition to the requirements of the stormwater permits required. There are other regulatory requirements that also affect the design of stormwater management, quality, and control that are specific to local regions and areas not covered in this document.

LID is a positive step on the way to more efficient handling of the environmental impacts due to development. Many State and local jurisdictions are adopting the tenets of LID and changes that reflect this acceptance will become apparent in new regulatory guidance. Local jurisdiction of LID design that is more restrictive will take precedence over these criteria.

TABLE OF CONTENTS

1 CHAPTER 1: INTRODUCTION 1
1.1 PURPOSE AND SCOPE 1
1.2 BACKGROUND OF LOW IMPACT DEVELOPMENT 1
1.3 APPLICATION FOR NAVY FACILITIES 3
1.4 REFERENCES 4
2 CHAPTER 2: PLANNING AND COMPLIANCE 7
2.1 THE PLANNING COMPONENT 7
2.1.1 ORGANIZING THE PLANNING PROCESS AND TIMELINE 7
2.2 GAINING ACCEPTANCE OF LID OPTIONS 10
2.3 COST ANALYSIS 10
2.4 COMPLIANCE WITH NAVY CRITERIA 11
2.5 REGULATORY COMPLIANCE 11
2.5.1 LAWS AND REGULATIONS IMPACTING LID 11
2.5.2 CWA PERMITS AND APPROVALS 12
2.5.3 BUILDING CODES 12
2.6 EPA GUIDANCE 12
2.7 OTHER PROGRAMS AND AGREEMENTS 12
2.8 SUSTAINABILITY AND MAINTENANCE 17
2.8.1 MAINTENANCE OF LID FEATURES 17
3 CHAPTER 3: STORMWATER MANAGEMENT 22
3.1 HYDROLOGIC CYCLE 22
3.2 STORMWATER DISPOSAL VS STORMWATER MANAGEMENT 23
3.3 WATER QUALITY AND POLLUTION PREVENTION 25
3.4 DESIGN INPUTS 25
3.5 PRECIPITATION DATA 25
3.6 LOW-IMPACT DESIGN ELEMENTS FOR STORMWATER MANAGEMENT 25
4 CHAPTER 4: LID DESIGN CRITERIA 28
4.1 INTRODUCTION 28
4.2 HYDROLOGIC ANALYSIS 28
4.2.1 MIMIC EXISTING (PRE-DEVELOPMENT) HYDROLOGIC CONDITIONS 29
4.2.2 TIME OF CONCENTRATION (TC) FOR PRE- AND POST-DEVELOPMENT CONDITIONS 30
4.2.3 DESIGN STORM EVENT FOR LID DESIGN AND IMPLEMENTATION 30
4.2.4 DESIGN STORAGE OF LID-IMP FEATURES 31
4.3 NO NET INCREASE 32
4.4 DESIGN CONSIDERATIONS 32
4.5 CONSTRUCTION PERMIT PROCESS 33
4.6 CONCLUSION 33
4.7 RESOURCE INDEX 38

ACRONYMS AND ABBREVIATIONS

Item	Definition
ARC	Antecedent Runoff Condition
ASN	Assistant Secretary of the Navy
Bio	Biological
BMP	Best Management Practice
CN	Curve Number
CNIC	Commander Navy Installations Command
CWA	Clean Water Act
DASN	Deputy Assistant Secretary of the Navy
DoD	Department of Defense
e.g.	for example
EISA	Energy Independence and Security Act
EPA	United States Environmental Protection Agency
Eq.	Equation
FEC	Facilities Engineering Command
hr	hour
HSG	Hydrologic Soil Group
I&E	Installations and Environment
I&F	Installations and Facilities
i.e.	as such
I_a	Initial Abstraction
IMP	Integrated Management Practice
in/hr	inches per hour
LEED	Leadership in Energy and Environmental Design
LID	Low Impact Development
MCX	Marine Corps Exchange
MWR	Morale, Welfare, and Recreation
NEX	Navy Exchange
NPDES	National Pollutant Discharge Elimination System
NRCS	Natural Resources Conservation Service
O&M	Operations and Maintenance
O&M,MC	Operations and Maintenance, Marine Corps
O&M,N	Operations and Maintenance, Navy
OMSI	Operation and Maintenance Support Information
PGDER	Prince George's County Department of Environmental Resources
pH	Measure of the acidity of a solution
PWD	Public Works Department
SCS	USDA Soil Conservation Service
sec/hr	seconds per hour
sq ft	square feet
SWM	Stormwater Management
Tc	Time of Concentration
TR-55	Technical Release 55
UFC	Unified Facilities Criteria
USDA	United States Department of Agriculture

1 CHAPTER 1: INTRODUCTION

1.1 PURPOSE AND SCOPE

This Low Impact Development Navy Guidance Document has been prepared to assist in the implementation of the Navy's LID criteria (UFC 3-210-10, Low Impact Development). This document provides general guidelines and references for the planning and design of projects incorporating Low Impact Development (LID). The goal is to provide a background document with the necessary development information to support the revised Unified Facilities Criteria (UFC 3-210-10) LID document.

The Assistant Secretary of the Navy, (ASN) Installations and Environment (I&E) has implemented policy for LID that sets an objective of "no net increase in stormwater runoff volume and sediment or nutrient loading from major renovation and construction projects". All projects that are determined to meet the conditions requiring LID will comply with these criteria to the maximum extent possible.

Low Impact Development strategies provide decentralized hydrologic source control for stormwater. In short, LID seeks to manage the rain, beginning at the point where it falls. This is done through a series of techniques that will be referred to as Integrated Management Practices (IMP). The IMPs are distributed small-scale controls that closely maintain or replicate hydrological behavior of the natural system for a defined design storm event.

This new criterion is to be used to complement the Federal, State, and Local regulations pertaining to Stormwater Management (SWM) in the project locale. Every effort has been made to base the criteria on a practical engineering approach using industry and commercial standards, and will reference on-going development on LID practices.

1.2 BACKGROUND OF LOW IMPACT DEVELOPMENT

It is commonly accepted that conventional site planning must continue to evolve in order to improve methods of handling stormwater runoff. Early SWM consisted of efficient drainage systems that quickly removed the runoff from the site through channelization and piping. This approach drastically changed the hydrological behavior of the natural systems, increasing the volume of stormwater runoff, sediment, and nutrient loadings to the receiving water bodies. The resulting impacts were apparent in pollution, overloading of downstream structures, and damage due to erosion of natural watercourses. The methodologies that were developed in response to the Clean Water Act (CWA) stormwater permit process improved the way stormwater has been managed. These methods have become the conventional SWM approach. Still these efficient drainage system designs with "end-of-pipe" treatment options (stormwater detention/retention basins), are focused on the large-scale management of stormwater, controlling the rate of runoff, but not the volume of runoff. Newer site design philosophies seek to provide additional treatment and control at a localized level. Low Impact Development techniques work alongside the current approach to provide a micro-view of handling runoff at its source or point of origination to improve stormwater quality and reduce not just the rate, but hold the net stormwater runoff volume to pre-development quantities. For the purposes of

LOW IMPACT DEVELOPMENT:
Minimize Impervious Footprint
Protect Natural Vegetation
Extend Time of Concentration
Filter & Infiltrate
Store & Reuse

UFC 3-210-10 and this document, pre-development condition is taken to mean a typical, natural land condition of the project site just prior to human development for the given region and setting.

Specification of the pre-development condition is often problematic. The site designer shall provide a site condition narrative to document the analysis of the pre-development condition. Apart from the apparent increase in impervious area, the primary impacts due to human development are soil compaction, clearing of old growth vegetation, and increased efficiency of drainage patterns. The three land development conditions of concern are;

1) Pre-Development Condition,
2) Existing Development Condition, and
3) Post Development Condition.

In the development of the site narrative the site designer shall document the existing soil conditions, groundwater table of the project site, description of typical surrounding natural lands, and a brief history of existing development; including impervious area, lawns/meadows, forested area, wetlands, and water bodies, that comprises the existing development condition. It is recognized that there are very many different existing development conditions (including everything from leveling and fill to existing conditions that bear no resemblance to what came before). The goal, however, is to document a return to a realistic natural pre-development condition for the particular locale and setting.

The site designer must meet the requirements imposed by the State regulators and follow the design methodologies as defined in the Civil Engineering UFC 3-200-10N by choosing LID strategies that complement the conditions of the site.

Since 2004, LID techniques for controlling storm water runoff have been considered for many Navy projects based on site requirements and constraints. Low Impact Development strategies provide a decentralized hydrologic source control for stormwater. LID implementation is based on selecting IMPs that are distributed, small-scale controls that can closely maintain or replicate hydrological behavior of the natural system for a defined design storm event. The use of LID was pioneered in the 1990s by Prince George's County, Maryland Department of Environmental Resources (PGDER) under a grant from the Environmental Protection Agency (EPA).

These new design philosophies require a shift in the design paradigms, and new ways to evaluate the success of the site design goals. In order for the Navy's site designer to implement LID successfully, they must have the analytical tools necessary to calculate and evaluate these new SWM features. This guidance document provides industry standard practices and design methodologies that have been proven effective during the development of LID techniques by the engineering community, the EPA, and the PGDER, and supports the criteria requirements of the revised UFC 3-210-10 LID document. The designer will be required to design SWM Best Management Practices (BMP) and LID IMPs to control all regulated storm events. To support that effort the UFC 3-210-10 will define a design storm to provide consistent application of the LID criteria. LID IMPs will control runoff volume and the time of concentration (Tc) in order to mimic the pre-development hydrologic conditions for the LID volume, while standard BMPs may be required to handle the peak rate of discharge for flood control and downstream channel protection.

LID is a SWM strategy that has a goal of maintaining the existing hydrologic functions of the site after development or redevelopment. LID differs from conventional SWM principles in that it does not store and release stormwater. LID uses infiltration,

PRE-DEVELOPMENT CONDITION:

The 'pre-development' condition shall be taken to mean a typical, natural land condition of the project site just prior to human development for the given region and setting.

evaporation, plant transpiration, and reuse of rainwater to keep the additional stormwater generated due to the developed condition contained on site. This creates a hydrograph that more closely resembles the pre-development plot of runoff amount and time. These techniques not only reduce pollutants and temperature, they prevent additional stormwater from directly flowing into nearby rivers, streams, lakes, and coastal waters by taking advantage of the natural filtering ability of the soils and vegetation.

Therefore, when LID is implemented in conjunction with all other required SWM techniques it provides a pollution treatment component to the process. This treatment component is an outcome of the application of the LID criteria as defined in UFC 3-210-10. LID is a site-by-site, parcel-by-parcel approach to SWM that addresses the increase in runoff over the normal existing development conditions. There are many factors that control runoff from a storm event, including the intensity of the storm, season, soil types, groundwater conditions, antecedent rainfall (soil saturation), and regional weather patterns. LID implementation may reduce the size of peak discharges but it is not intended to be used for flood control, and indeed, should divert large runoff volumes to the conventional stormwater BMPs.

Section 438 of the Energy Independence and Security Act of 2007 (EISA) established into law new storm water design requirements for Federal development and redevelopment projects. Under these requirements, Federal projects over 5,000 square feet must "maintain or restore, to the maximum extent technically feasible, the predevelopment hydrology of the property with regard to the temperature, rate, volume, and duration of flow". Just as LID can assist in fulfilling environmental regulatory requirements under the Clean Water Act, the Navy will use LID in implementing EISA section 438. LID will be considered in all design projects that have a storm water element, and based on the site-specifics of the project, incorporated to the maximum extent technically feasible.

1.3 APPLICATION FOR NAVY FACILITIES

The Department of the Navy has set the policy to comply with the precepts of LID for "no net increase in storm water volume and sediment or nutrient loading from major renovation and construction projects". They define major renovation projects as "having a storm water component and exceeding $5 million when initially approved by Deputy Assistant Secretary of the Navy (Installations & Facilities) (DASN (I&F))". They define major construction projects as "those exceeding $750K".

The State, Local, and special permit requirements will need to be met in conjunction with the incorporation of LID IMPs. Leadership in Energy and Environmental Design (LEED) will also factor into the SWM design.

A good facility-wide Operations and Management (O&M) management program will facilitate LID implementation. Maintenance program elements such as targeted routine maintenance, facility-wide street sweeping, and storm drop inlet marking programs will improve the effectiveness of LID IMPs.

The application of LID to the Navy's infrastructure development program is practical and achievable, but it will require a change of thinking on the part of the site designer. The LID IMPs fall into five categories, as follows:

1) Site Utilization: Begin the site process by reducing the impervious footprint if possible. Narrower streets, vertical construction, parking structures, and the

NAVY POLICY DIRECTIVE:

ASN (I&E) has implemented policy for LID that sets an objective of "no net increase in stormwater runoff volume and sediment or nutrient loading from major renovation and construction projects"

removal of curb, gutter, and paved swales are a few of the ways to reduce impervious surfaces. It is crucial to mimic the pre-development hydrologic conditions in order for LID to be effective. Choose rougher surfaces, disconnect impervious areas, and increase the time of concentration (Tc). Retain as much of the natural tree cover as practical, and place the impervious structures in areas of the poorest soil types where possible.

2) Filtration: Include filtration practices in the site design. Vegetative buffers, filter strips, vegetative swales, check dams, sediment traps, and overland flow will provide natural water quality treatment and increase the time of concentration (Tc).
3) Interception/Infiltration: The infiltration techniques of LID are the backbone of the runoff volume reduction. Depression storage, bio-infiltration, pervious pavements, open pavers, rain gardens, infiltration trenches, and tree boxes are gaining wide acceptance as tools in the SWM toolbox. Interception can also play a major role in reducing runoff volumes. Interception techniques include deep mulch beds, tree cover, soil amendments, and increased lawn-mowing heights.
4) Retention of Stormwater Volumes: Retention can play an important part in successful LID implementation. Retention seeks to hold runoff from localized impervious surfaces for subsequent treatment after the rainfall event. Rain barrels, storage and release cisterns, and parking lot storage that slowly drain to infiltration zones are examples of retention techniques.
5) Structural Solutions: Structural solutions represent the last line of defense in the LID IMPs. Structural solutions will increase the facility construction cost and must be balanced with mission requirements. In urban and industrial areas, sensitive environments, or known contaminated sites, structural solutions are often the only solution. These techniques are engineered solutions for the particular facility and can include green roofs, rainwater reuse systems, parking structures, and irrigation storage systems.

1.4 REFERENCES

The site designer is encouraged to contact the Navy Project Manager, Navy Environmental Technical point of contact, State and local regulatory officials to determine the requirements of his/her stormwater programs. Table 1 is provided as a reference for determining the status by state or territory for the regulation of the CWA and applicability to Federal facilities. This table is not a comprehensive list of the applicable stormwater regulations and each site designer shall be responsible for understanding the regulatory requirements of their region.[1]

A list of LID design reference material is included at the end of Chapter 4.

LID IMP Categories:

Site Utilization
Stormwater Filtration
Interception and Infiltration
Retention of LID Stormwater Volumes
Structural Solutions

[1] The state of the art in SWM is changing rapidly. Many States are in the process of revising SWM regulations to include LID features, primarily in an attempt to control pollutants. The regulation of SWM is nuanced with multiple stakeholders and regulations (e.g., the District of Columbia approves SWM plans while the EPA administers NPDES permits). It is crucial in this changing regulatory landscape for the site designer to be aware and familiar with their local conditions and requirements.

Table 1: Authorized NPDES Regulatory Agency

State	Approved State NPDES Permit Program	Approved to Regulate Federal Facilities	Regulating Agency for Federal Facilities
Alabama	✔ 10/19/1979	✔ 10/19/1979	Alabama Department of Environmental Management (ALDEM)
Alaska*	✔ 10/31/2008		EPA Region 10
American Samoa			EPA Region 9
Arizona	✔ 12/5/2002	✔ 12/5/2002	Arizona Department of Environmental Quality (AZDEQ)
Arkansas	✔ 11/1/1986	✔ 11/1/1986	Arkansas Department of Environmental Quality (ARDEQ)
California	✔ 5/14/1973	✔ 5/5/1978	California State Water Resources Control Board (CASWRCB)
Colorado	✔ 3/27/1975		EPA Region 8
Connecticut	✔ 9/26/1973	✔ 1/9/1989	Connecticut Department of Environmental Protection (CTDEP)
Delaware	✔ 4/1/1974		EPA Region 3
District of Columbia			EPA Region 3
Florida	✔ 5/1/1995	✔ 5/1/2000	Florida Department of Environmental Protection (FLDEP) Water Management Districts (WMDs)
Georgia	✔ 6/28/1974	✔ 12/8/1980	Georgia's Environmental Protection Division (GAEPD)
Guam			EPA Region 9
Hawaii	✔ 11/28/1974	✔ 6/1/1979	Hawaii Department of Health Clean Water Branch (CWB)
Idaho			EPA Region 10
Illinois	✔ 10/23/1977	✔ 9/20/1979	Illinois Environmental Protection Agency (IEPA)
Indiana	✔ 1/1/1975	✔ 12/9/1978	Indiana Department of Environmental Management (IDEM)
Iowa	✔ 8/10/1978	✔ 8/10/1978	Iowa Department of Water Quality (DWQ)
Johnston Atoll			EPA Region 9
Kansas	✔ 6/28/1974	✔ 8/28/1985	Kansas Department of Health and Environment (KDHE)
Kentucky	✔ 9/30/1983	✔ 9/30/1983	Kentucky Department of Environmental Protection (DEP)
Louisiana	✔ 8/27/1996	✔ 8/27/1996	Louisiana Department of Environmental Quality (LDEQ)
Maine	✔ 1/12/2001	✔ 1/12/2001	Maine Department of Environmental Protection (DEP)
Maryland	✔ 9/5/1974	✔ 11/10/1987	Maryland Department of the Environment (MDE)
Massachusetts			EPA Region 1
Michigan	✔ 10/17/1973	✔ 12/9/1978	Michigan Department of Environmental Quality (MDEQ)
Midway Island			EPA Region 9
Minnesota	✔ 6/30/1974	✔ 12/9/1978	Minnesota Pollution Control Agency (MPCA)
Mississippi	✔ 5/1/1974	✔ 1/28/1983	Mississippi Department of Environmental Quality (DEQ)
Missouri	✔ 10/30/1974	✔ 6/26/1979	Missouri Department of Natural Resources (MoDNR)
Montana	✔ 6/10/1974	✔ 6/23/1981	Montana Department of Environmental Quality (MDEQ)
Nebraska	✔ 6/12/1974	✔ 11/2/1979	Nebraska Department of Environmental Quality (DEQ)
Nevada	✔ 9/19/1975	✔ 8/31/1978	Nevada Department of Environmental Protection (NDEP)
New Hampshire			EPA Region 1
New Jersey	✔ 4/13/1982	✔ 4/13/1982	New Jersey Department of Environmental Protection (NJDEP)
New Mexico			EPA Region 6
New York	✔ 10/28/1975	✔ 6/13/1980	New York Department of Environmental Conservation (NYDEC)
North Carolina	✔ 10/19/1975	✔ 9/28/1984	North Carolina Department of Environment and Natural Resources (N.C.DENR)
North Dakota	✔ 6/13/1975	✔ 1/22/1990	North Dakota Department of Health & Environmental Division of Water Quality (DHEWQ)
Northern Mariana Islands			EPA Region 9
Ohio	✔ 3/11/1974	✔ 1/28/1983	Ohio Environmental Protection Agency (OEPA)
Oklahoma**	✔ 11/19/1996	✔ 11/19/1996	Oklahoma Department of Environmental Quality (DEQ)
Oregon	✔ 9/26/1973	✔ 3/2/1979	Oregon Department of Environmental Quality (DEQ)
Pennsylvania	✔ 6/30/1978	✔ 6/30/1978	Pennsylvania Department of Environmental Protection (DEP)
Puerto Rico			EPA Region 2
Rhode Island	✔ 9/17/1984	✔ 9/17/1984	Rhode Island Department of Environmental Management (RIDEM)

State	Approved State NPDES Permit Program	Approved to Regulate Federal Facilities	Regulating Agency for Federal Facilities
South Carolina	✔ 6/10/1975	✔ 9/26/1980	South Carolina Department of Health and Environmental Control (DHEC)
South Dakota	✔ 12/30/1993	✔ 12/30/1993	South Dakota Department of Environment & Natural Resources (DENR)
Tennessee	✔ 12/28/1977	✔ 9/30/1986	Tennessee Department of Environment and Conservation (DEC)
Texas***	✔ 9/14/1998	✔ 9/14/1998	Texas Commission on Environmental Quality(TXCEQ)
Utah	✔ 7/7/1987	✔ 7/7/1987	Utah Department of Environmental Quality (DEQ)
Vermont	✔ 3/11/1974		EPA Region 1
Virgin Islands	✔ 6/30/1976	✔ 12/26/2007	Caribbean Environmental Protection Division
Virginia	✔ 3/31/1975	✔ 2/9/1982	Virginia Department of Conservation & Recreation
Wake Island			EPA Region 9
Washington	✔ 11/14/1973		EPA Region 10
West Virginia	✔ 5/10/1982	✔ 5/10/1982	West Virginia Department of Environmental Protection (WVDEP)
Wisconsin	✔ 2/4/1974	✔ 11/26/1979	Wisconsin Department of Natural Resources (DNR)
Wyoming	✔ 1/30/1975	✔ 5/18/1981	Wyoming Department of Environmental Quality (DEQ)

U.S. Environmental Protection Agency

Low Impact Development (LID) is an approach to land development (or re-development) that works with nature to manage stormwater as close to its source as possible. LID employs principles such as preserving and recreating natural landscape features, minimizing effective imperviousness to create functional and appealing site drainage that treats stormwater as a resource rather than a waste product. Many practices have been used to adhere to these principles such as bioretention facilities, rain gardens, vegetated rooftops, rain barrels, and permeable pavements. By implementing LID principles and practices, water can be managed in a way that reduces the impact of built areas and promotes the natural movement of water within an ecosystem or watershed. Applied on a broad scale, LID can maintain or restore a watershed's hydrologic and ecological functions. LID has been characterized as a sustainable stormwater practice by the Water Environment Research Foundation and others.

Low Impact Development (LID)

http://www.epa.gov/nps/lid/

Stormwater Program

http://cfpub.epa.gov/npdes/home.cfm?program_id=6

Authorization Status for EPA's Stormwater Construction and Industrial Programs

http://cfpub.epa.gov/npdes/stormwater/authorizationstatus.cfm

State Program Status

http://cfpub2.epa.gov/npdes/statestats.cfm

Managing Wet Weather with Green Infrastructure

http://cfpub.epa.gov/npdes/home.cfm?program_id=298

2 CHAPTER 2: PLANNING AND COMPLIANCE

2.1 THE PLANNING COMPONENT

Successful implementation of LID begins during the planning process. The planner is one of the first steps in the successful implementation of LID. It is not expected that the planner will determine the exact configuration of IMPs and the ways in which LID will shape the site design, however, the planner can use the tools at their disposal to ensure adequate resources and time have been allocated to the project. This section will provide the planner with the organizational tools and steps to build upon in considering LID in the final project.

Depending on the level of where the planner or programmer is in the planning stage, each step progresses further into the details of the planning process. For example, budget planning at an early stage may only develop Step 1, then move on to Cost Analysis. Master Planning would necessarily move through Step 4, and preliminary design through Step 6.

2.1.1 ORGANIZING THE PLANNING PROCESS AND TIMELINE

Step 1: *Define project objectives and goals*

1) Identify the LID objectives and legal requirements for the project (e.g., stormwater permits, state erosion control and flood requirements, EISA section 438). Consider runoff volume, peak runoff rate, duration, frequency, and water quality.
2) Evaluate existing stormwater infrastructure in terms of how well it functions with respect to each of these aspects.
3) Determine the goals and feasibility for control of runoff volume, duration, and water quality; as well as on-site use of stormwater (e.g. irrigation, flushing toilets).
4) Prioritize and rank basic objectives.
5) Define hydrologic controls required to meet objectives (i.e. infiltration, filtration, discharge frequency, volume of discharges, and groundwater recharge).

Step 2: *Perform site evaluation and analysis*

A site evaluation will facilitate LID design development by providing site details that will assist in the development of an LID program.

1) Conduct a detailed investigation of the site using available documents such as drainage maps, utilities information, soils maps, land use plans, and aerial photographs.
2) If possible, delineate the watershed and micro-watershed areas. Take into account previously modified drainage patterns, roads, and stormwater conveyance systems.
3) Perform an on-site visual inspection highlighting opportunities, such as pollutant-generating areas, potential disconnects from combined sewer systems, and potential green corridors. Note potential LID practices and areas where water quality and quantity controls could be installed.
4) Note apparent site constraints such as available space, underground utilities, soil infiltration characteristics, slope, drainage patterns, water table, sunlight, shade, wind, critical habitat, and circulation.
5) Identify protected areas, setbacks, easements, topographic features, sub-drainage divides, and other site features that should be protected such as floodplains, steep slopes, and wetlands.
6) In coastal regions, locate the baseline hydrologic and water quality data where available. In order of preference, try to locate:
   a. Local stream gage data and site water quality sampling data
   b. Data from a similar area within region
   c. Local averages
   d. Modeling results

7) Identify applicable local regulations or codes.

Step 3: *Develop LID control strategies*

Use hydrology as a design element. In order to minimize the runoff potential of the development, the hydrologic evaluation should be an ongoing part of the design process. An understanding of site drainage can suggest locations for both green areas and potential building sites. An open drainage system can help integrate the site with its natural features, creating a more aesthetically pleasing landscape.

1) Determine the State regulatory design storms. Regulatory requirements for design storms may also be stipulated in local ordinances, and these may limit or constrain the use of LID techniques or necessitate that structural controls be employed in conjunction with LID techniques.
2) Determine LID volumes using 95th percentile design storm and TR-55 methodologies (page 30).
3) Evaluate current conditions. Analyze site with traditional hand methods or computer simulations. Use the results of modeling to estimate baseline values for the four evaluation measures: runoff volume, peak runoff rate, flow frequency and duration, and water quality.
4) Implement non-structural site planning techniques:
   - Minimize total site impervious area.
   - Use alternative roadway layouts that minimize imperviousness.
   - Reduce road widths and drive aisles.
   - Limit sidewalks to one side of roads.
   - Reduce on-street parking.
   - Use permeable paving materials.
   - Minimize directly connected impervious areas.
   - Disconnect roof drains and direct drainage to vegetated areas.
   - Direct flows from paved areas to stabilized vegetated areas.
   - Break up flow directions from large paved surfaces.
   - Encourage sheet flow through vegetated areas.
   - Locate impervious areas so that they drain to permeable areas.
   - Maximize overland sheet flow.
   - Maximize use of open swale systems.
   - Increase (or augment) the amount of vegetation on the site.
   - Use site fingerprinting. Restrict ground disturbance to the smallest possible area.
   - Reduce compaction of highly permeable soils.
   - Minimize size of construction easements and material stockpiles.
   - Place stockpiles within development envelope during construction.
   - Avoid removal of existing trees.
   - Maintain existing topography and associated drainage divides to encourage dispersed flow paths.
   - Locate new buildings, parking, and ponds in areas that have lower hydrologic function, such as clayey or disturbed soils.
   - Modify drainage flow paths to increase time of concentration (Tc).
   - Define the development envelope.
5) Evaluate site planning benefits and compare with baseline values. The modeling analysis is used to evaluate the cumulative hydrologic benefit of the site planning process in terms of the four evaluation measures.
6) Evaluate the need for IMPs. If site

LID Planning Steps:
Define Project Goals
Perform Site Evaluation
Develop LID Strategies
Prepare LID Concept Design
Target O&M Strategy

planning is not sufficient to meet the site's LID objectives, additional hydrologic control needs may be addressed through the use of IMPs. After IMPs are selected for the site, a second-level hydrologic evaluation can be conducted that combines the IMPs with the controls provided by the planning techniques. Results of this hydrologic evaluation are compared with the baseline conditions to verify that the site LID objectives have been achieved. If not, additional IMPs are located on the site to achieve the optimal condition.

7) Evaluate supplemental needs. If supplemental control for either volume or peak flow is still needed after the use of IMPs, selection and listing of additional management techniques should be considered. For example, where flood control or flooding problems are key design objectives, or where site conditions, such as poor soils or a high water table, limit the use of IMPs, additional conventional end-of-pipe methods, such as large detention ponds or constructed wetlands, should be considered. In some cases their capacity can be reduced significantly by the use of LID upstream. It may be helpful to evaluate several combinations of LID features and conventional stormwater facilities to determine which combination best meets the stated objectives. Use of hydrologic evaluations can assist in identifying the alternative solutions prior to detailed design and construction costs.

8) For residential areas, Prince George's County, Maryland, has developed a detailed illustration of an approach for conducting a hydrologic evaluation based on the NRCS TR-55 method. Where NRCS methods (TR-20, TR-55) are accepted for hydrologic evaluation, the effect of LID features should be reflected in the curve numbers and times of concentration selected for the analysis. A full description of this process is available from Prince George's County (*Low-Impact Development Hydrologic Analysis*, Reference 2.)

Step 4: *LID Concept Design or Master Plan*

1) Maximize the efficiency of the existing site. Place impervious areas in poorer soils and retain existing trees where practical.
2) Sketch a design concept that distributes the LID practices appropriately around the project site. Keep in mind the multifunctional capability of LID technologies (i.e., parking lot with detention facility underground).
3) Develop a master plan that identifies all key control issues (water quality, water quantity, water conservation) and implementation areas. Specify specific LID technologies and any connections they have to stormwater overflow units and sub-surface detention facilities.
4) Develop landscaping plans to maximize the efficiency of the LID IMPs and reduce maintenance. Use hardy, native plantings.

Step 5: *Develop Operation and Maintenance Procedures*

At the planning stage, the UFC 3-210-10 criteria should be referenced for inclusion in Operation and Maintenance Support Information documentation (OMSI) and design bridging documentation. O&M procedures for each of the LID practices implemented in the site plan should be developed as part of the OMSI documents. Different types of IMPs will have different maintenance requirements, but some general principles will apply:

1) Keep IMPs and flow paths clear of debris.
2) Regular trash pickup will be required.
3) Use native, drought-tolerant plantings that can tolerate periods of saturation. If required, water vegetation regularly during dry periods. Use special care in selecting plants in areas of tidal influence.
4) Consider impact on plants by road salts.
5) Grassed areas should be mowed regularly using a longer length cut.
6) Plantings should be pruned as needed.

7) Deep raking and tilling of depression storage should be done on a yearly basis or as indicated.

2.2 GAINING ACCEPTANCE OF LID OPTIONS

Low Impact Development projects will require a higher level of communication to keep stakeholders informed. From building tenant commands to O&M personnel, communicating intent and purpose is the key to successful LID implementation. In addition, for some period, feedback on implementation and program success will be required for all new facilities through the local Navy Environmental Office.

2.3 COST ANALYSIS

One of the most difficult challenges of the planner is to properly allocate resources for projects so that they are successful and fulfill the mission as programmed. LID requirements can add a new level of complexity to the project that must be addressed during planning. While it may be too early in the process for the planner to determine the exact final design configuration of the LID IMPs, they can use the information that they have to determine a level of effort required to implement LID (LID IMP design is discussed in Chapter 4). The three resources that the planner must address for LID are;

1) Implementation cost (may be less than traditional),
2) Operation & Maintenance costs, and;
3) Time impacts to design and permitting process.

The planner must gather information on the project mission; including geographical location, site requirements, available sites, and programmed space requirements. These set points will also help the planner to determine the proper resource allocations to apply for the implementation of the LID site. LID is a method of SWM that focuses on the macro vision for site development. LID is implemented on every square foot of the site at the point of rainfall onward. LID IMPs used in conjunction with conventional SWM will create a treatment train to hold, infiltrate, and filter the stormwater runoff. The LID site will contain less channelization of stormwater, less impervious pavement, more trees, more open ditches (less curb and gutter), and more planting buffers (rainwater filters). Many parameters must be weighted in the design of a LID site. Design must match the particular regional conditions.

Many of these site conditions affect the design of LID. Regional differences in weather patterns, soil types, groundwater conditions, existing development status, and current stormwater patterns will greatly influence the actual design and layout of the LID site and the choice of the IMPs. However, for the planner, one of the most important parameters will be the ratio of increased impervious surface area to the available land area.

As is readily apparent, optimal LID implementation on a suitable site will result is a reduction in project cost. Classic LID design will reduce the amount of disturbed land, reduce impervious surface area, eliminate curb and gutter, reduce the size of pipes and holding ponds, increase the area planted in low maintenance tree cover, and reduce high maintenance structural planting beds and grass. Building a large facility on a small site will cost more to implement LID than building a small building on a large site. The small site will require the selection of IMPs that are structural in nature and are more expensive to build and maintain, while the small building on the large site can use the more organic IMPs that are less costly and more easily maintained.

Stormwater Management:
Research Stormwater Permit
Evaluate Site Conditions
Develop Complementary LID Strategies
Work with Regulators

Table 2: Budget Planning Cost Factor Ratios

RATIO	COST FACTOR	TIME FACTOR	TYPICAL IMPs
75% - 90% IMPERVIOUS	1.20	Additional time required for Design and Construction. Permit Process Extended	Cisterns, Green roof, Reuse, pervious pavement, parking structures, vertical construction
60% - 75% IMPERVIOUS	1.15	Additional time required for Permit Process	Cisterns, reuse, bioretention, filters, tree boxes, vertical construction
50% - 60% IMPERVIOUS	1.10	No additional time required	Cisterns, bioretention, filters, tree boxes, bio-swales,
30% - 50% IMPERVIOUS	1.00	No additional time required	Bioretention, filters, tree boxes, bio-swales,
<30% IMPERVIOUS	0.90	No additional time required	Bioretention, bio-swales

Table 2: Budget Planning Cost Factor Ratios, provides guidelines for resource allocation based on planning parameters. The goal is to provide the budget planner/programmer information to ensure that the proper dollars and time have adequately funded the LID implementation effort.

2.4 COMPLIANCE WITH NAVY CRITERIA

Each Installation must comply with DoD Directives and Executive orders that apply. The Installation Appearance Guidelines will need to be considered in conjunction with LID techniques.

All Navy facilities must comply with DoD Minimum Antiterrorism Standards for Buildings UFC 4-010-01. The UFC 4-010-01 takes precedence over UFC 3-210-10 if a conflict arises. In most cases the planting type, height, and/or location can be changed to meet the UFC 4-010-01 criteria.

All Navy facilities must also comply with DoD Civil Engineering UFC 3-200-10N (in the process of being revised). In the event of conflicts between the UFC and LID guidance, consult the Civil reviewer for direction.

LID costs will need to be considered at the planning stage when selecting the site. LID may directly affect the life cycle costs where site constraints force more costly LID features to be used to meet goals. In many cases, there will also be a stormwater permit requirement to reduce post-development runoff and EISA section 438 may still apply.

UFC 4-030-01, Sustainable Development, provides a discussion of LEED. LEED compliance is a key component to the Navy's facilities program and may influence the design of the site and LID features.

2.5 REGULATORY COMPLIANCE

2.5.1 LAWS AND REGULATIONS IMPACTING LID

Section 438 of the Energy Independence and Security Act of 2007 (EISA) established into law new storm water design requirements for Federal development and redevelopment projects. Under these requirements, Federal projects over 5,000 square feet must "maintain or restore, to the maximum extent technically feasible, the predevelopment hydrology of the property with regard to the temperature, rate, volume, and duration of

flow". Just as LID can assist in fulfilling environmental regulatory requirements under the Clean Water Act, Navy will use LID in implementing EISA section 438. LID will be considered in all design projects that have a storm water element, and based on the site-specifics of the project, incorporated to the maximum extent technically feasible.

The LID approach dovetails with the stormwater requirements of the CWA NPDES Phase II. Many of the standards for SWM set in the CWA may be met using LID IMPs. The issues pertaining to SWM fall under the authority of the United States EPA. While the EPA maintains the national standards for stormwater permitting, most states have been authorized by the EPA, as agents for that agency, to issue stormwater NPDES permits. These states may impose more stringent standards than the EPA. Every new construction or retrofit project must meet applicable federal, state, and local regulatory requirements pertaining to construction materials, elevation and drainage, SWM, historic features, and wetlands protection. Because LID may be a new concept in some areas, Navy personnel may have to plan for additional regulatory agency reviews to gain support for LID as an effective alternative to traditional SWM control.

State and local requirements may affect the LID IMPs considered in lieu of or in addition to BMPs that are allowable at each installation.

2.5.2 CWA PERMITS AND APPROVALS

Each approved regulating state has an agency that administers the state's SWM program.

Table 1 contains a listing of the regulating agency for each of the States and US Administrative Territories. Table 3 provides the website contact information for each of the approved regulating States.

2.5.3 BUILDING CODES

LID-IMP facilities shall comply with DoD and Activity requirements and surrounding base architecture. Refer to UFC 3-100-10N, General Architecture and Interior Design Guide. In general, compliance must be in accordance with other directives such as Americans with Disabilities Act (ADA), and the Architectural Barriers Act (ABA), as defined in the Uniform Federal Accessibility Standards (UFAS). In addition, LID design must follow applicable industry practice standards and Local Building Codes.

Locally restrictive building codes, historic preservation, or unique local requirements must be identified and considered in the planning and design of a LID element. For some Navy facilities, all project elements, including LID designs, must meet UFC 1-200-01, Design: General Building Requirements. As with any project, the project manager, or contractor must ensure that the project meets all Installation use plans or development master plans and must identify any special waivers, modifications, or processes that may be needed to gain approval. The design details should be evaluated for conformance with standard UFC building codes to address access, safety, and health issues.

2.6 EPA LID GUIDANCE

The following EPA manuals: "Reducing Stormwater Costs through Low Impact Development (LID) Strategies and Practices" and "Low Impact Development (LID) A Literature Review" are referenced as sources. These manuals were based on the PDGR document "Low-Impact Development Design Strategies; An Integrated Design Approach", and is geared toward general site development. Sites on military bases may have additional constraints that will influence which LID IMPs may be used.

Other Federal Directives and Executive Orders that affect LID planning and design must be identified and considered.

2.7 OTHER PROGRAMS AND AGREEMENTS

Many facilities may also be impacted by voluntary programs and agreements that will affect LID element planning and design. Regional Restoration Programs, Consent Orders, voluntary compliance, usage agreements, and other regulatory instruments

can also influence LID development. It is best to work with local regulators and Navy personnel to determine if any other programs are in place that may influence LID design.

Photo 1: Typical Bio-infiltration 'Rain Garden'. Note curb cut inlet. Design should be based on regional plants and growing conditions.

Table 3: Websites for State Stormwater Regulatory Agencies

STATE	REGULATORY WEBSITES
Alabama	Alabama Department of Environmental Management (ALDEM)
	http://www.adem.state.al.us/
	http://www.adem.state.al.us/WaterDivision/WaterDivisionPP.htm
Alaska	Alaska Department of Environmental Conservation (DEC)
	http://www.dec.state.ak.us/
	http://www.dec.state.ak.us/water/wnpspc/stormwater/stormwater.htm
Arizona	Arizona Department of Environmental Quality (AZDEQ)
	http://www.azdeq.gov/
	http://www.azdeq.gov/environ/water/permits/stormwater.html
Arkansas	Arkansas Department of Environmental Quality (ARDEQ)
	http://www.adeq.state.ar.us/
	http://www.adeq.state.ar.us/water/branch_permits/general_permits/stormwater/default.htm
California	California State Water Resources Control Board (CASWRCB)
	http://www.swrcb.ca.gov/
	http://www.swrcb.ca.gov/water_issues/programs/stormwater/
Connecticut	Connecticut Department of Environmental Protection (CTDEP)
	http://www.ct.gov/dep/site/default.asp
	http://www.ct.gov/dep/cwp/view.asp?a=2721&q=325702&depNav_GID=1654
Florida	Florida Department of Environmental Protection (FLDEP) delegated authority to four of the five regional Water Managem
	http://www.dep.state.fl.us/
	http://www.dep.state.fl.us/secretary/watman/default.htm
Georgia	Georgia's Environmental Protection Division (GAEPD)
	http://www.gaepd.org/
	http://www.gaepd.org/Documents/epdforms_wpb.html#storm
Hawaii	Hawaii Department of Health Clean Water Branch (CWB)
	http://hawaii.gov/health/environmental/water/cleanwater/index.html%20
	http://hawaii.gov/health/environmental/water/cleanwater/about/stdcond.html
Illinois	Illinois Environmental Protection Agency (IEPA)
	http://www.epa.state.il.us/
	http://www.epa.state.il.us/water/index-wpc.html
Indiana	Indiana Department of Environmental Management (IDEM)
	http://www.in.gov/idem/
	http://www.in.gov/idem/4907.htm
Iowa	Iowa Department of Water Quality (DWQ)
	http://www.iowadnr.gov/index.html
	http://www.iowadnr.gov/water/index.html
Kansas	Kansas Department of Health and Environment (KDHE)
	http://www.kdheks.gov/
	http://www.kdheks.gov/stormwater/index.html
Kentucky	Kentucky Department of Environmental Protection (DEP)
	http://www.dep.ky.gov/
	http://www.water.ky.gov/

STATE	REGULATORY WEBSITES
Louisiana	Louisiana Department of Environmental Quality (LDEQ)
	http://www.deq.louisiana.gov/portal/
	http://www.deq.louisiana.gov/portal/tabid/243/Default.aspx
Maine	Maine Department of Environmental Protection (DEP)
	http://www.maine.gov/dep/index.shtml
	http://www.maine.gov/dep/blwq/stand.htm
Maryland	Maryland Department of the Environment (DOE)
	http://www.mde.state.md.us/
	http://www.mde.state.md.us/Programs/WaterPrograms/SedimentandStormwater/index.asp
Michigan	Michigan Department of Environmental Quality (MDEQ)
	http://www.michigan.gov/deq
	http://www.michigan.gov/deq/0,1607,7-135--207334--,00.html
Minnesota	Minnesota Pollution Control Agency (MPCA)
	http://www.pca.state.mn.us/
	http://www.pca.state.mn.us/water/stormwater/index.html
Mississippi	Mississippi Department of Environmental Quality (DEQ)
	http://www.deq.state.ms.us/MDEQ.nsf/page/Main_Home?OpenDocument
	http://www.deq.state.ms.us/MDEQ.nsf/page/epd_epdgeneral?OpenDocument
Missouri	Missouri Department of Natural Resources (MoDNR)
	http://www.dnr.mo.gov/
	http://www.dnr.mo.gov/env/wpp/index.html
Montana	Montana Department of Environmental Quality (MDEQ)
	http://www.deq.state.mt.us/
	http://www.deq.state.mt.us/wqinfo/index.asp
Nebraska	Nebraska Department of Environmental Quality (DEQ)
	http://www.deq.state.ne.us/
	http://www.deq.state.ne.us/
Nevada	Nevada Department of Environmental Protection (NDEP)
	http://ndep.nv.gov/
	http://ndep.nv.gov/bwpc/index.htm
New Jersey	New Jersey Department of Environmental Protection (NJDEP)
	http://www.state.nj.us/dep/
	http://www.state.nj.us/dep/infofinder/topics/water.htm
New York	New York Department of Environmental Conservation (NYDEC)
	http://www.dec.ny.gov/
	http://www.dec.ny.gov/chemical/8468.html
North Carolina	North Carolina Department of Environment and Natural Resources (N.C.DENR)
	http://www.enr.state.nc.us/
	http://h2o.enr.state.nc.us/Stormwater.html
North Dakota	North Dakota Department of Health & Environmental Division of Water Quality (DHEWQ)
	http://www.ndhealth.gov/
	http://www.ndhealth.gov/WQ/Storm/StormWaterHome.htm

STATE	REGULATORY WEBSITES
Ohio	Ohio Environmental Protection Agency (OEPA)
	http://www.epa.state.oh.us/
	http://www.epa.state.oh.us/dsw/
Oklahoma	Oklahoma Department of Environmental Quality (DEQ)
	http://www.deq.state.ok.us/
	http://www.deq.state.ok.us/WQDnew/stormwater/index.html
Oregon	Oregon Department of Environmental Quality (DEQ)
	http://www.oregon.gov/DEQ/
	http://www.deq.state.or.us/wq/stormwater/stormwater.htm
Pennsylvania	Pennsylvania Department of Environmental Protection (DEP)
	http://www.depweb.state.pa.us/dep/site/default.asp
	http://www.depweb.state.pa.us/watershedmgmt/cwp/view.asp?a=1437&Q=518682&PM=1
Rhode Island	Rhode Island Department of Environmental Management (RIDEM)
	http://www.dem.ri.gov/
	http://www.dem.ri.gov/programs/benviron/water/permits/ripdes/stwater/index.htm
South Carolina	South Carolina Department of Health and Environmental Control (DHEC)
	http://www.scdhec.net/
	http://www.scdhec.gov/environment/water/swnpdes.htm
South Dakota	South Dakota Department of Environment & Natural Resources (DENR)
	http://denr.sd.gov/
	http://denr.sd.gov/des/sw/stormwater.aspx
Tennessee	Tennessee Department of Environment and Conservation (DEC)
	http://www.state.tn.us/environment/
	http://www.state.tn.us/environment/wpc/
Texas	Texas Commission on Environmental Quality(TXCEQ)
	http://www.tceq.state.tx.us/
	http://www.tceq.state.tx.us/compliance/monitoring/nps/mgmt-plan/index.html
Utah	Utah Department of Environmental Quality (DEQ)
	http://www.deq.utah.gov/
	http://www.waterquality.utah.gov/UPDES/stormwater.htm
Virginia	Virginia Department of Conservation & Recreation
	http://www.dcr.virginia.gov/
	http://www.dcr.virginia.gov/soil_&_water/stormwat.shtml
West Virginia	West Virginia Department of Environmental Protection (WVDEP)
	http://www.wvdep.org/
	http://www.wvdep.org/item.cfm?ssid=11&ss1id=604#Storm
Wisconsin	Department of Natural Resources (DNR); Department of Transportation (DOT); and the Department of Commerce (COM
	http://www.dnr.state.wi.us/
	http://www.dnr.state.wi.us/runoff/stormwater.htm
Wyoming	Wyoming Department of Environmental Quality (DEQ)
	http://deq.state.wy.us/
	http://deq.state.wy.us/wqd/WYPDES_Permitting/WYPDES_Storm_Water/stormwater.asp

2.8 SUSTAINABILITY AND MAINTENANCE

Site design should incorporate sustainable development concepts to reduce energy consumption, O&M costs, and reduce waste and pollution. Refer to Leadership in Energy and Environmental Design (LEED) Guidance per NAVFACINST 9830.1, and the *Sustainable Building Technical Manual: Green Building Design, Construction, and Operations* for specific design guidance.

2.8.1 MAINTENANCE OF LID FEATURES

It is important that facility planners and designers investigate the maintenance requirements for LID IMPs under consideration. Facility planners and designers should ensure that appropriate installation maintenance personnel are consulted and that maintenance procedures, responsibilities, equipment, and funding sources are evaluated in advance of implementation. Improper maintenance could render a LID IMP inoperable and could lead to undesirable SWM issues. Due to size or location, some installations do not have the specialized equipment or capability to perform certain functions (e.g., vacuum truck). In some cases, the potential consequences of inadequate or improper maintenance could lead a planner or designer to eliminate certain LID IMPs from further consideration.

LID IMPs could be maintained by a variety of maintenance providers. On Navy installations owned and operated by Commander Navy Installations Command (CNIC), the Regional Commander will provide Operations and Maintenance, Navy (O&M,N) funds to the local Facilities Engineering Command (FEC) and their subordinate Public Works Departments (PWDs) to provide maintenance services. Maintenance of real property belonging to the FEC is funded with Navy Working Capital Funds, managed entirely by the FEC. The PWDs depend upon Facility Support Contracts with commercial maintenance providers as well as government employees from the PWD Maintenance Division to perform the maintenance. On Marine Corps installations, the Facilities Maintenance Officer within the PWD will utilize Operations and Maintenance, Marine Corps (O&M,MC) funds and local Marine Corps labor, Facilities Maintenance Division employees, or Facility Support Contracts administered by the servicing FEC to maintain the installation. On Navy and Marine Corps installations, many Morale, Welfare and Recreation (MWR) activities, Navy and Marine Corps Exchange (NEX/MCX) activities, and other Department of Defense funded activities maintain their own facilities and grounds. Note that the maintenance provider and source of maintenance funding are not always self-evident.

Maintenance of LID IMPs that are selected for conveyance, infiltration or landscaping and do not include structural elements is relatively inexpensive. These IMPs include filter strips, vegetated buffers, grassed swales, and bio-swales. The predominant maintenance activities include mowing, irrigation, weeding, re-seeding, evaluating the health of grasses, plants, trees and shrubs, pruning, removal and replacement of dead vegetation, regulation of soil pH, erosion repair at inflow points, and mulch replacement. In some instances, pollutants captured and retained in soil may reach toxic levels, requiring soil replacement. A less evident maintenance requirement is increased trash removal. A significant volume of trash is currently captured and carried away in an installation's storm sewers. Increased use of LID IMPs results in trash being deposited within the IMP, such as a filter strip or a grassed swale. This trash must be collected and handled appropriately and impacts traditional grounds maintenance operations.

Sustainability and Maintenance:
Evaluate Maintenance Provider
Determine Funding Source
Communicate LID Maintenance Requirements
Require OMSI Documentation

LID IMPs that do include structural elements bring additional maintenance complexities. These IMPs include dry wells, infiltration trenches, inlet devices, permeable pavers, permeable pavement, and bio-retention and bio-filtration systems such as tree box filters. Porous concrete pavers and interlocking concrete pavers require power sweeping, low-pressure washing, replacement of lost aggregate fill and repair of localized settling. Permeable pavement must be vacuumed or cleaned with a street sweeper at least twice per year. Deteriorated areas of permeable pavement must be replaced. Unknowing, well-intentioned maintenance personnel might be tempted to re-seal deteriorated areas, thus rendering the pavement impermeable. Dry wells, infiltration trenches, and tree boxes need to be inspected regularly and may need to be unclogged, cleared of debris and blockages and in some instances, stone layers may need to be removed, washed, and replaced.

The maintenance of LID IMPs selected for storage or reuse of storm water can be extremely complex. Maintenance of green roofs requires well-designed procedures to detect leaks, inspect and repair the roof membrane, inspect and maintain collection systems, and care for the plantings. In extreme cases, even native plants will need to be irrigated during periods of drought. Maintenance of gray water cisterns can involve complex maintenance of multiple mechanical, electrical, and structural systems.

The planning, design and implementation of LID IMPs can yield substantial environmental benefits and facility management cost savings, but only if long term maintenance is appropriately considered, planned, budgeted and performed.

Special care should be taken to monitor and maintain areas that remain wet longer than two days. This will ensure that mosquito breeding and vector control is not an issue in improperly maintained retention/infiltration IMPs.

Bioretention/biofiltration

Routine maintenance should include a biannual health evaluation of the trees and shrubs and subsequent removal of any dead or diseased vegetation. This maintenance can be incorporated into regular maintenance of the site landscaping. The use of native plant species in the bioretention cell will reduce fertilizer, pesticide, water, and overall maintenance requirements. Treat diseased vegetation as needed using preventative and low-toxic measures. When levels of pollutants reach toxic levels that impair plant growth and the effectiveness of the IMP, soil replacement may be required. Other potential tasks include replacement of dead vegetation, soil pH regulation, erosion repair at inflow points, mulch replenishment, unclogging the underdrain, and repairing overflow structures. Depending on pollutant loads, soils may need to be replaced within 5-10 years of construction.

Dry Wells

Maintenance is minimal and includes clearing the rain gutters of debris that clogs the downspout. The wells can clog over time if there is extensive loading of fine-grained sediment. Clogging is evident if there is standing water after a rain event at the surface of the facility. The appropriate corrective action is to first dig out the gravel and then excavate to remove the sediment and uncover a layer of soils that has sufficient infiltration capacity.

Filter strips

Filter strips require standard vegetation management, such as mowing, irrigation, and weeding. Typical maintenance activities include inspection of filter strips at least twice annually for erosion or damage to vegetation and additional inspection after periods of heavy runoff. Trash tends to accumulate in filter strip areas, particularly along highways. The need for litter removal should be determined through periodic inspection, but litter should always be removed prior to mowing.

Vegetated Buffers

Buffers should be monitored and managed to maintain their maximum water quality benefits and, where desired, wildlife habitat benefits. They should be inspected at least once a year, and always within a few days after severe storms, for evidence of sediment deposition, erosion, or development of concentrated flow channels. Weed and invasive species control is essential for the survival and rapid growth of trees and shrubs. It is best to avoid working in the riparian area between April 15 and August 15, when a variety of animals are bearing their young. If the buffer width is sufficient, vegetated buffers should be self-maintaining. Changes in hydrology, drought, over-grazing or natural disasters such as flooding or fire may require the replanting or reestablishment of the buffer.

Grassed Swales

The maintenance objectives include keeping up the hydraulic and removal efficiency of the channel and maintaining a dense, healthy grass cover. Maintenance activities should include periodic mowing (with grass never cut shorter than the design flow depth), weed control, watering during drought conditions, reseeding of bare areas, and clearing of debris and blockages. Cuttings should be removed from the channel. Accumulated sediment should also be removed manually to avoid concentrated flows in the swale. Avoid applying fertilizers and pesticides. The grass cover should be thick and reseeded as necessary. Any standing water removed during the maintenance operation must be properly disposed of properly.

Bioswales

The maintenance objectives include keeping up the hydraulic and removal efficiency of the channel and maintaining a dense, healthy grass or vegetated cover. Maintenance activities should include weed control, watering during drought conditions, replanting of bare areas, and clearing of debris and blockages. Accumulated sediment should also be removed manually to avoid concentrated flows in the swale. Avoid applying fertilizers and pesticides. Any standing water removed during the maintenance operation must be properly disposed of properly.

Infiltration Trenches

The principal maintenance objective is to prevent clogging, which may lead to trench failure. Infiltration trenches should be inspected after large storm events and any accumulated debris or material should be removed. A thorough annual inspection should include monitoring of the observation well to confirm that the trench is draining properly. Trenches with filter fabric should be inspected for sediment deposits by removing a small section of the top layer and examining the material in the trench itself. When vegetated buffer strips are used, they should be mowed regularly and inspected for erosion or other damage after each major storm event. The corrective action for infiltration trench failure is to remove the stone and sediment that has clogged the system. The trench should be over excavated and scarified to ensure that the infiltration capacity of the soil is sufficient. The stone is washed to remove any sediment and then replaced. It is critical that any surrounding areas be stabilized to eliminate the potential for sediment clogging.

Inlet Devices

Proper maintenance of a hydrodynamic separator involves frequent inspections throughout the first year of installation to ensure that sediments are removed before the unit's sediment capacity is reached. Sediment depth can be measured using a "dip stick" or rod. Subsequently, sediment removal may be performed with a sump-vac or vacuum truck, depending on which type of separator is used. After the first year of installation, inspections can be scheduled according to observed rates of sediment accumulation. In general, hydrodynamic separators require a minimal amount of maintenance, but lack of attention will lower their overall pollutant removal efficiency. Replacement of filters and non-durable parts require removal and replacement. Excessive

bypass of sediments or pollutants may require additional devices or modification of the device.

Cisterns

Maintenance requirements for cisterns are often low. Cisterns, along with all their components and accessories, should undergo regular inspection at least twice a year. Replacement or repair of the unit as a whole, and any of its constituent parts and accessories should be completed as necessary. There are few mechanical parts on cisterns. Components such as screens or valves are easily replaced. Large cisterns constructed out of materials such as metal or concrete may need repairs to walls by parging (for concrete) or welding (for metal).

Rain Barrels

Maintenance requirements for rain barrels are minimal and consist only of regular inspection of the unit as a whole and any of its constituent parts and accessories. All components should be inspected at least twice a year and repaired or replaced as needed. Replacement or repair of the unit as a whole, and any of its constituent parts and accessories should be completed as necessary. There are no mechanical parts on rain barrels. Components such as screens and valves may fail, but they are easily replaced.

Permeable Pavers

After installation of a permeable paver system, maintenance is minimal but necessary to ensure the long lifetime of the system. Grass pavers will require the normal watering and mowing maintenance of any turf system. Porous concrete and interlocking concrete paving blocks require that the surface be kept clean of organic materials (leaves, for example). Periodic vacuuming and low-pressure washing should be used to clear out voids and extend the paver's functional life. Conventional street sweepers should be used with vacuums, brushes, and water ideally four (4) times a year, but the actual required frequency will be determined by local conditions. With the interlocking system, additional aggregate fill material may be required after cleaning. If there is an extensive buildup of a "scum" layer within the voids, the chip stone should be vacuumed, power-washed, cleaned, and replaced. In case of localized settling, individual paver blocks can be removed, new gravel added, and the blocks replaced. In case of spills or contamination, the blocks and gravel layers can be removed and the area remediated.

Permeable Pavement

Maintenance requirements are similar to those for permeable pavers. To maintain its permeability, the pavement must be vacuumed or cleaned with a street sweeper at minimum twice a year. This removes sediments, organic matter, and atmospheric deposition that would otherwise clog the pavement over time. With proper preventative maintenance, no additional actions should be necessary to maintain permeability. Pavements that have clogged because of neglect may require intensive vacuuming. As with conventional pavement, normal wear and tear may require repairs. For asphalt, however, care should be taken to replace the affected areas, because re-sealing would create an impervious surface. Contractors and maintenance staff should be acquainted with the differences between conventional and permeable pavement in order to prevent such a scenario.

Green Roofs

Once a properly installed vegetated roof is well established, its maintenance requirements are usually minimal. There are two basic types of vegetated roofing systems: extensive and intensive. Extensive roofs form a thin vegetated sheath of self-sufficient mosses, sedums, and small shrubs. Their low profile allows them to be added to existing buildings, including those with sloping roofs. By contrast, intensive roofs are integral to the roof structure, permitting the use of trees and walkways. A greater depth of media may be required to accommodate larger vegetation and surface features. Intensive roofs require more structural as well as horticultural maintenance, similar to a conventional garden, because plantings tend to be both heavier and more elaborate than on extensive

roofs. For both types of roofs, maintenance requirements typically include inspection of the roof membrane, the most crucial element of a vegetated roof, as well as inspection and preventive maintenance of the drainage collection systems. Corrective actions for vegetated roofs are generally to repair localized problems. Systems that are more complex may have monitoring devices incorporated into the membrane. Leak detection systems can be brought to the site to locate breaches in the membrane. The soil media can be removed and the membrane repaired. Long periods of drought or loss of soil to high winds may require replacement of the media or replanting. If drought becomes an issue, corrective actions include installing an irrigation system or scheduling supplemental watering.

Soil amendments

In some jurisdictions across the country, soil amendments may be inspected as part of the sediment control plan for a site, usually upon site completion. Routine inspection of amended soils should evaluate factors that may affect the soil's infiltration capacity, aeration, and organic content. Typical post construction concerns include areas subject to compaction, hydric or waterlogged soils, poor cover conditions, increased development, and a decrease in organic content. In addition, a routine soil infiltration rate analysis of amended soils in potential problem areas is recommended. Corrective actions for soil amendments involve restoring the infiltration capacity of the soil. Reductions in infiltration capacity typically result from compaction or extensive root matting of groundcovers, such as grasses. The first step of corrective action should be extensive mechanical aeration. If this does not restore the infiltration rate, organic amendments should be disked into the soil for a depth of several inches and the site restabilized.

Tree Box Filters

Tree box filters require little maintenance. Maintenance includes annual routine inspection and the regular removal of trash and debris, and sediment, replenishment of the mulch, and care or replacement of plants. During extreme droughts, the plants may need to be watered in the same manner as any other landscape material. Plants may have to be replaced because they have overgrown the filter, in which case their root structure may overwhelm the area of the soils, or because of environmental stress. The grates on top of the structure may become cracked and have to be replaced, although this should rarely occur because they are designed to be traffic bearing. The soil may become contaminated from a spill and have to be removed and properly disposed.

Figure 2-1: Typical Tree Box Filter

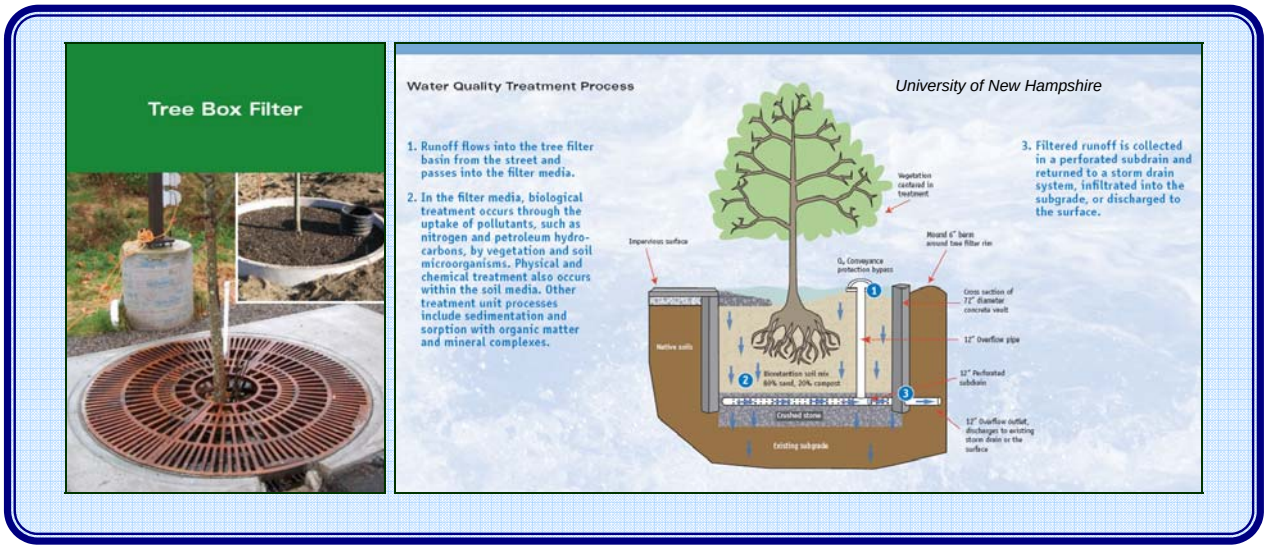

3 CHAPTER 3: STORMWATER MANAGEMENT

Human development increases impervious surfaces. Buildings, roads, sidewalks, and parking lots quickly shed rainwater and increase the percentage of rainfall that ends up as runoff. The resulting increase in runoff volume and the peak flows create negative consequences such as stream degradation and flooding risk. The principal objective of LID is to retain this increase in runoff on-site. LID techniques allow the developed site to mimic the pre-development hydrologic conditions.

LID builds on the conventional SWM philosophies and carries them a step further. LID processes begin at the point where the rain falls. Considering incorporating LID concepts, tools, and approaches requires assessment of the following at a minimum:

- Will the concept closely mimic the hydrology of predevelopment condition thereby meeting certain regulatory requirement and/or resource protection goals?
- Will the concept positively influence the pollutant loading (defined as the product of flow and concentration)? By imparting hydrologic source control(s), the stormwater runoff from the development site is reduced thereby reducing the pollutant loading.
- Can the drainage conveyance structures be optimized and reduce the overall cost of the project?
- What might be the hurdles for public acceptance? If required for the project to move forward, can these be reasonably achieved?

Implementing LID alone on the project may not suffice in meeting all regulatory requirements. LID must be used in combination with applicable BMPs in order to continue to produce effective SWM benefits.

3.1 HYDROLOGIC CYCLE

Dr. David Maidment in his *Handbook of Hydrology* states: “The hydrologic cycle is the most fundamental principle of hydrology. Water evaporates from the oceans and the land surface, is carried over earth in atmospheric circulation as water vapor, precipitates again as rain or snow, is intercepted by trees and vegetation, provides runoff on the land surface, infiltrates into soils, recharges groundwater, discharges into streams, and ultimately, flows out into the oceans from which it will eventually evaporate once again. This immense water engine, fueled by solar energy, driven by gravity, proceeds endlessly in the presence or absence of human activity.”

Of the total precipitation that occurs, a portion of it is lost through:

(i) interception due to land cover,

(ii) evapotranspiration,

(iii) surface depression storage, and

(iv) infiltration.

Only the excess precipitation results in runoff that reaches receiving water bodies, such as streams and lakes. The process of infiltration is responsible for the largest portion of rainfall losses in pervious areas. LID techniques seek to mimic pre-development hydrologic condition in the post-development phase.

An understanding of the dynamics and inter-relationships in the hydrologic cycle is essential in preserving the pre-development hydrology. A comparison of pre- and post-development hydrologic conditions is evaluated for four basic measures – runoff volume, peak rate of runoff, flow frequency/duration, and water quality. These four evaluation measures are discussed below:

Runoff Volume: LID techniques, if implemented properly into site design, will result in ‘no net increase’ in runoff for a specified design storm event.

Peak Rate of Runoff: LID is designed to maintain pre-development hydrologic conditions for all storms smaller than the design storm event. If additional controls are required, either to meet the state or local

regulations and/or flooding issues for unusual storm events, conventional SWM facilities can be designed and implemented.

Flow Frequency/Duration: LID techniques mimic pre-development hydrologic conditions if implemented properly. The flow frequency/duration should be almost the same.

Water Quality: Because of the very nature of decentralized hydrologic source control, the non-point source pollution is greatly reduced, thereby, increasing the water quality of the receiving water bodies.

Table 4 compares and summarizes concepts of storm water management and LID techniques. For LID designs with IMPs, it is appropriate to analyze the site as discrete units and rationalize on a case-by-case basis. When calculating the runoff potential from LID sites one should consider land cover, impervious areas, and its connection with centralized collection system, soil type and texture, and antecedent moisture condition. These should all be considered on a site-specific basis.

3.2 STORMWATER DISPOSAL VS STORMWATER MANAGEMENT

The main principle of incorporating LID elements into site planning design is to ensure that there is no net increase in runoff volume for the design storm. As detailed in Chapter 2 of this manual, there are number of techniques that can be employed in eliminating the increase in runoff.

The main processes or practices that affect elimination of an increase in runoff volume for the design storm include infiltration at decentralized locations, increasing the length and time of flow over pervious areas, and disconnecting impervious areas that drain to stormwater collection systems. These help to retain the increase in runoff from new development on site.

Conventional SWM facilities are to be primarily designed to divert unusual storm event runoff volumes and in controlling flooding and downstream impacts due to this increased runoff but also to provide water quality benefits.

In contrast to conventional SWM methods that use “end-of-pipe” treatment, LID techniques, if incorporated early on during the planning and design phase, may reduce land requirements associated with conventional treatment and may make the overall design more aesthetically pleasing. LID may reduce the overall costs of a project and reap benefits in protecting the environment and natural habitats.

Table 4: Summary of Concepts of SWM and LID Techniques.

Concepts of SWM	Concepts of LID Techniques
End-of-pipe storm water treatment.	Storm water is treated at or very close to the source/origination of runoff.
Centralized collection system	Decentralized system
Reroute stormwater away from the site quickly and efficiently	Mimics the pre-development hydrologic condition. The goal of LID is to retain the same amount of rainfall within the development site as that was retained on the site prior to development
Many of the storm water management facilities are designed to control or attenuate peak runoff	LID techniques reduce the size of stormwater management facilities.
SWM facilities are designed to treat first-flush i.e. first ½ inch of runoff from impervious areas of development.	LID techniques may suffice to treat the first-flush on site without a need for separate treatment options.

Table 5: Comparison of Conventional SWM and LID Technologies, summarizes how conventional SWM and LID technology alter the hydrologic regime for on-site and off-site conditions.

Table 5: Comparison of Conventional SWM and LID Technologies

Hydrologic Parameter	Conventional SWM	LID
	On-Site	
Impervious Cover	Encouraged to achieve effective drainage	Minimized to reduce impacts
Vegetation/Natural Cover	Reduced to improve efficient site drainage	Maximized to maintain predevelopment hydrology
Time of concentration (Tc)	Shortened, reduced as a by-product of drainage efficiency	Maximized and increased to approximate predevelopment conditions
Runoff Volume	Large increases in runoff volume not controlled	Controlled to predevelopment conditions
Peak Discharge	Controlled to predevelopment design storm (2 year & 10 year)	Controlled to predevelopment conditions for all storms
Runoff Frequency	Greatly increased, especially for small, frequent storms	Controlled to predevelopment conditions for all storms
Runoff Duration	Increased for all storms, because volume is not controlled	Controlled to predevelopment conditions
Rainfall Abstractions (interception, infiltration, depression storage)	Large reduction in all elements	Maintained to predevelopment conditions
Groundwater Recharge	Reduction in recharge	Maintained to predevelopment conditions
	Off-Site	
Water Quality	Reduction in pollutant loadings but limited control for storm events that are less than design discharges	Improved pollutant loading reductions, full control for storm events that are less than design discharges
Receiving Streams	Severe impacts documented – channel erosion and degradation, sediment deposition, reduced base flow, and habitat suitability decreased, or eliminated	Stream ecology maintained to predevelopment
Downstream Flooding	Peak discharge control reduces flooding immediately below control structure, but can increase flooding downstream through cumulative impacts & superpositioning of hydrographs	Controlled to predevelopment conditions

Source: Low-Impact Development Design Strategies, prepared by Prince George County, Maryland.

3.3 WATER QUALITY AND POLLUTION PREVENTION

LID or decentralized hydrologic source control centers on selecting IMPs that are distributed small-scale controls that can closely maintain or replicate the hydrology of predevelopment site conditions. These IMPs address additional regulatory requirement or other resource protection goals. Similarly, in meeting the regulatory requirements, structural BMPs can be designed to act as effective, practicable means of minimizing the impacts of development associated with water quality and quantity control.

Because of the very nature of decentralized hydrologic source control, the non-point source pollution is greatly reduced, thereby, increasing the water quality of the receiving water bodies.

3.4 DESIGN INPUTS

Design inputs for successful implementation of LID techniques into site development project, at a minimum, are as follows:

a. Detailed land cover and land-use information
b. Topographic contours, preferably 1' interval contours
c. Soil borings, minimum of three borings, 15-foot deep. These borings should reveal nature and condition of the shallow subsurface soils at this location, as well as defining the groundwater table, usability of on site material for select fill, and through compositional analysis should determine both vertical and horizontal hydraulic conductivities.
d. Existing site drainage outfall conditions and characteristics including water level elevation and water quality.
e. Watershed reports and master plans
f. Flooding issues, past or present
g. Installation Appearance Guide

3.5 PRECIPITATION DATA

The intensity-duration-frequency curves for the United States were recently revised and published by the National Oceanic and Atmospheric Administration (NOAA), and are called Atlas-14 curves. These curves should be used in determining the precipitation depth/intensity for required duration and/or frequency.

Long-term rainfall records for regional weather stations can be obtained from many sources, including the NOAA data center, at http://www.nesdis.noaa.gov. Table 10 provides a summary of rainfall analysis for selected Navy facilities.

3.6 LOW-IMPACT DESIGN ELEMENTS FOR STORMWATER MANAGEMENT

The LID concept encourages innovation and creativity in management of site planning impacts. As mentioned earlier, the implementation of LID techniques must be carefully evaluated for opportunities and constraints on a case-by-case basis. Many of the techniques are site specific. Table 6 summarizes the specific use of LID techniques, requirement, and applicability. Table 7 summarizes hydrologic functions of LID practices.

Table 6: Summary of LID Techniques, Constraints, Requirements, and Applicability

	Space required	Soils	Slopes	Water Table/Bedrock	Proximity to building foundations	Max. depth	Maintenance
Bioretention	Minimum surface area range: 50 to 200 ft². Minimum width 5 to 10 ft. Minimum Length 10 to 20 ft. Minimum depth 2 to 4 ft.	Permeable soils with infiltration rates > 0.27 inches/hr are recommended. Soil limitations can be overcome with use of underdrains.	Usually not a limitation, but a design consideration.	2- to 4-ft clearance above water table/bedrock recommended	Minimum distance of 10 ft down gradient from buildings and foundations recommended	2- to 4-ft depth depending on soil type	Low requirement, property owner can include in normal site landscape maintenance
Dry Well	Minimum surface area range: 8 to 20 ft². Minimum width 2 to 4 ft. Minimum Length 4 to 8 ft. Minimum depth 4 to 8 ft.	Permeable soils with infiltration rates > 0.27 inches/hr are recommended.	Usually not a limitation, but a design consideration. Must locate down gradient of building foundations.	2- to 4-ft clearance above water table/bedrock recommended	Minimum distance of 10 ft down gradient from buildings and foundations recommended	6- to 10-ft depth depending on soil type	Low requirement
Filter/Buffer Strip	Minimum length of 15 to 20 ft.	Permeable soils perform better, but soil not a limitation.	Usually not a limitation, but a design consideration.	Generally not a constraint.	Minimum distance of 10 ft down gradient from buildings and foundations recommended	Not applicable	Low requirement, routine landscape maintenance
Swales: Grass, Infiltration, Wet	Bottom width: 2 ft minimum, 6 ft maximum	Permeable soils provide better hydrologic performance, but soils not a limitation. Selection of type of swale, grassed, infiltration or wet is influenced by soils.	Swale side slopes: 3:1 or flatter. Longitudinal slope: 1.0% minimum; maximum based on permissible velocities.	Generally not a constraint.	Minimum distance of 10 ft down gradient from buildings and foundations recommended	Not applicable	Low requirement, routine landscape maintenance
Rain Barrels	Not a factor	Not a factor	Usually not a limitation, but a design consideration.	Generally not a constraint.	Not a factor	Not applicable	Low requirement
Cistern	Not a factor	Not a factor	Not a factor				
Infiltration Trench	Minimum surface area range: 8 to 20 ft². Minimum width 2 to 4 ft. Minimum Length 4 to 8 ft.	Permeable soils with infiltration rates > 0.52 inches/hr are recommended.	Usually not a limitation, but a design consideration. Must locate down gradient of building foundations.	2- to 4-ft clearance required	Minimum distance of 10 ft down gradient from buildings and foundations recommended	6- to 10-ft depth depending on soil type	Moderate to high

Source: Low-Impact Development Design Strategies, prepared by Prince George County, Maryland

Table 7: Summary of Hydrologic Functions of LID Practices

Hydrologic Functions	Bioretention	Dry Well	Filter/Buffer Strip	Swales: Grass, Infiltration, Wet Wells	Rain Barrels	Cistern	Infiltration Trench
Interception	High	None	High	Moderate	None	None	None
Depression Storage	High	None	High	High	None	None	Moderate
Infiltration	High	High	Moderate	Moderate	None	None	High
Ground Water Recharge	High	High	Moderate	Moderate	None	None	High
Runoff Volume	High	High	Moderate	Moderate	Low	Moderate	High
Peak Discharge	Moderate	Low	Low	Moderate	Moderate	Moderate	Moderate
Runoff Frequency	High	Moderate	Moderate	Moderate	Moderate	Moderate	Moderate
Water Quality	High	High	High	High	Low	Low	High
Base Flow	Moderate	High	High	Moderate	Moderate	None	Low
Stream Quality	High	High	High	Moderate	None	Low	High

Source: Low-Impact Development Design Strategies, prepared by Prince George County, Maryland.

4 CHAPTER 4: LID DESIGN CRITERIA

4.1 INTRODUCTION

LID strategies provide decentralized hydrologic source control for stormwater. LID implementation centers around selecting IMPs which are distributed small-scale controls that can closely maintain or replicate hydrological behavior of the natural system for a design storm event.

The principal goal of designing LID-IMPs is to achieve no net increase in stormwater runoff volume and sediment or nutrient loading from major renovation and construction projects for the design storm under consideration. The designer will be required to design SWM BMPs as mandated by the State regulators and LID-IMPs to control all regulated storm events. This section of the criteria guidance manual defines a design storm to provide consistent application of the LID criteria. Further, the guidance manual provides a few of the design considerations in designing LID-IMP features that are not discussed elsewhere in this document. LID- IMPs will control runoff volume and time of concentration (Tc) in order to mimic the pre-development hydrologic conditions, while standard BMPs will be used in conjunction with IMPs depending on site conditions to handle the peak rate of discharge for flood control.

The site designer shall follow published design guidelines that contain criteria relative to achieving, maintaining, and emphasizing a positive exterior visual environment applicable to military installations. These documents include Comprehensive Regional Planning Instructions, Regional Plans (Navy), Master Plans (Marines), and Base Exterior Architecture Plans (BEAP). The design guidance contained in these documents is published under the authority of the Secretary of the Navy. The site designer shall consult the Navy's Project Manager for direction in case of conflicts. Direction to deviate from these documents should be given in writing.

4.2 HYDROLOGIC ANALYSIS

During a storm event, a portion of the precipitation is lost in the form of interception, depression storage, evaporation, transpiration, and infiltration. These losses are collectively referred to as *abstractions*. Only that part of the rainfall in excess of abstractions is realized as stormwater runoff. [2]

The Soil Conservation Service (SCS 1986) presented an empirical method of determining initial abstraction based on the runoff curve number (CN)[3] of the site and is given by:

Initial abstraction (inches), $I_a = 0.2*S$ …. **Eq. 1**

Where S = potential maximum retention after runoff begins (inches) = $\frac{1000}{CN} - 10$

The initial abstraction defined in Eq. 1 also represents the rainfall at which the direct runoff begins. Any rainfall over and above the initial abstraction results in direct surface runoff whether it is a virgin forest or a developed piece of land. Table 8: Initial Abstraction for Indicated Soil Types, gives representative runoff curve numbers and the calculated initial abstractions for selected soil types. The runoff generated from a project site and the initial abstraction of the site does not have a linear relationship. For this reason, required design storage of LID-IMPs is calculated using Eq. 2 and Eq. 3 discussed

[2] Holding excess rainwater on-site that would ordinarily end up as runoff can be detrimental in some cases. Rainfall that is retained in excess of the initial abstraction can destabilize certain soils on slopes, impact sensitive coastal tidal zones, increase the need for mosquito control, and in certain riparian or usufructuary rights create an infringement. In many areas where shallow groundwater aquifers are used for supply or irrigation, excess infiltration the designer must consider contamination issues.

[3] The runoff CN method accounts for all types of losses. The value of the curve number depends on the hydrologic soil group, soil cover type, hydrologic condition, the percentage of impervious areas in the watershed, and the antecedent moisture condition of the soil.

Table 8: Initial Abstraction for Indicated Soil Types

Existing Site Conditions	Curve Number (CN)	Initial Abstraction (inches)
Woods - good condition, HSG B	55	1.64
Woods - poor condition, HSG D	83	0.41
Pasture, grasslands - good condition, HSG B	61	1.28
Pasture, grasslands - fair condition, HSG C	79	0.53
Open space - lawns, park in fair condition, HSG B	69	0.90
Residential districts - 1/3 acre, 30% impervious, HSG B	72	0.78
Residential districts - 1/3 acre, 30% impervious, HSG C	81	0.47
Industrial area - 72% impervious, HSG B	88	0.27

later in this document under "Design Storage of LID-IMP Features".

Runoff curve numbers are determined by land cover type, hydrologic condition, antecedent runoff condition (ARC), and hydrologic soil group (HSG). Curve numbers for various land covers based on an average ARC for annual floods and I_a = 0.2S can be found in *Urban Hydrology for Small Watersheds* (Soil Conservation Service, 1986).

4.2.1 MIMIC EXISTING (PRE-DEVELOPMENT) HYDROLOGIC CONDITIONS

From the preceding table, it can be seen that the hydrology of a naturally wooded environment in good condition provides a maximum retention that in turn increases the water quality treatment of stormwater runoff. However, the typical site development project results in the following adverse environmental impacts:

- Changes to existing land-use and land cover,
- Changes to natural drainage patterns,
- Clear cutting of the native vegetation,
- Soil compaction due to the use of heavy construction vehicles on site,
- Increase in impervious area,
- Drainage systems that quickly move the water downstream.

As a result, the post-development hydrologic conditions are worsened, and in many cases, the damage becomes irreversible. For this reason, it is important to consider LID and mimic pre-development hydrologic conditions. The 'pre-development' condition shall be taken to mean a typical, natural land condition of the project site just prior to human development for the given region and setting. Specification of the pre-development condition is often problematic. The site designer shall provide a site condition narrative to document the analysis of the pre-development condition. Apart from the apparent increase in impervious area, the primary impacts due to human development are soil compaction, clearing of old growth vegetation, and increased efficiency of drainage patterns. The three land development conditions of concern are;

- Pre-Development Condition,
- Existing Development Condition, and
- Post Development Condition.

In the development of the site narrative the site designer shall document the existing soil conditions, groundwater table of the project site, description of typical surrounding natural lands, and a brief history of existing development; including impervious area,

lawns/meadows, forested area, wetlands, and water bodies, that comprises the existing development condition. It is recognized that there are very many different existing development conditions (including everything from leveling and fill to existing conditions that bear no resemblance to what came before). The goal, however, is to document a return to a realistic natural pre-development condition for the particular locale and setting.

LID techniques mimic the natural systems by capturing at the minimum, all of the initial abstraction through bio-infiltration practices and/or structural solutions of reuse or footprint reduction for a design storm event.

4.2.2 TIME OF CONCENTRATION (TC) FOR PRE- AND POST-DEVELOPMENT CONDITIONS

In order to mimic natural hydrologic patterns the site designer needs to provide features that limit the rate at which runoff leaves the site. The post-development time of concentration (Tc) must be equal to or greater than the pre-development Tc. Maintaining Tc close to pre-development conditions is critical because the peak runoff rate and thereby the volume of runoff from individual lots is inversely proportional to the time of concentration. The Tc shall be maintained by strategies such as reduction of impervious areas, maintaining natural vegetation, siting of impervious areas in poor draining soils, and disconnecting impervious areas.

Using traditional site planning techniques the post-development time of concentration (Tc) is invariably reduced. This is due to the curbs, channels, and pipes causing quicker drainage, resulting in higher peak flow rates. In order to mimic the natural hydrologic pattern the site designer needs to provide features that slow down the runoff from the site. To maintain the Tc use the following site planning techniques:

- Maintaining or increasing pre-development sheet flow length.
- Preserving natural vegetation.
- Increasing surface roughness.
- Detaining flows.
- Disconnecting impervious areas.
- Reducing longitudinal slopes of swales and ditches.

Achieving a Tc close to pre-development conditions is often an iterative process and requires analyzing different combinations of the appropriate techniques.

4.2.3 DESIGN STORM EVENT FOR LID DESIGN AND IMPLEMENTATION

Storm events are a complex natural phenomenon, and methods to predict and control their impacts rely upon empirical and mathematical modeling of the event. It is important to provide criteria to be used by the site designer that is easily understood and is based on recognized industry standards. Three principal approaches in determining the design storm event were analyzed, as follows:

Prince George County Methodology (Soil Conservation Service, TR-55 Method):

As previously mentioned any rainfall over and above the initial abstraction will result in direct surface runoff. It is prudent to design and implement IMPs for that rainfall event that exceeds initial abstraction (Eq. 1) in the pre-development conditions. The design methodology would apply a modifying factor of 1.5 times the initial abstraction (as suggested in the Prince George County LID manual) to serve as a practical approach to design IMP features.

EPA Methodology:

Another approach (as suggested by the EPA in their preliminary findings) for determining the design storm event would be based on the regional 95th percentile, 24-hour rainfall depth over several years (it is recommended to use *at least* 10 years of data to achieve better results). Using a design storm event of this magnitude would yield IMPs that mimic hydrologic pre-development conditions for 95% of all storm events occurring in an average year. An advantage to this approach is that it accounts for regional differences in weather patterns and is easily calculated. This method provides a conservative approach for determining LID volumes for all

storm events (EPA guidance is currently in draft, see table of resources, item 5).

Table 10 provides a summary of rainfall analysis for selected Navy facilities.

First-Flush Water Quality Volume:

Many States and localities have adopted the conventional approach of collecting and treating the *first-flush* or *water-quality* depth of rainfall. These terms are defined by the local regulatory agency. In certain areas, this first flush depth is generally taken to be the first one inch of rainfall. In other localities with sensitive coastal or reservoir watersheds, the first-flush is taken to be the first 1.5 inch rainfall depth. The water quality volume is equated to the volume of stormwater runoff generated by the first-flush rainfall depth. It would be practical to design LID-IMP features to handle the first-flush rainfall depth. LID-IMPs are designed to treat the first-flush volumes. The stormwater runoff quality is further improved by the design of conventional SWM practices required to meet the state regulations.

The Navy has chosen to use the 95th percentile design storm event in the current UFC 3-210-10 criteria. In addition, it is required that in those cases where the LID volume as calculated by the 95% is less than the State water quality volume, then the water quality approach should be used instead. This approach would result in a conservative design of LID-IMP features.

Most Local and State stormwater regulations include a first-flush or water quality depth for 2-, 5-, 10-, 25-, 50-, or 100-year regulated storm events. State and local requirements for stormwater management shall be met before the LID requirements are satisfied. The SWM BMPs shall be designed to control all regulated storm events, as stipulated by Local and State regulations to handle the peak rate and/or volume of discharge for flood control purposes.

To control the stormwater volume in accordance with LID policy, use the methodology from TR-55, Chapter 2: "Estimating Runoff". Calculate the runoff depth for both the pre- and post development conditions, and the difference will be the depth from which the volume to be retained on site can be determined.

4.2.4 DESIGN STORAGE OF LID-IMP FEATURES

For the selected design storm event, the LID volume is equal to or greater than the total net increase in runoff from the pre- to post-development states. Physically, the total volume of stormwater runoff generated during the post-development conditions exceeds the total volume of stormwater runoff generated from the site during the pre-development conditions. The design storage of LID-IMP features would be this difference in total volume of stormwater runoff generated between pre- and post-development conditions. The required design storage is calculated using the SCS methodology unless specifically required by State SWM guidance to use another technique.

Total depth of increase in runoff (inches),

$$D = \frac{(P - 0.2 * S')^2}{(P + 0.8 * S')} - \frac{(P - 0.2 * S)^2}{(P + 0.8 * S)} \quad \text{… Eq. 2}$$

Where, P = design storm rainfall depth (inches)

S & S' = potential maximum retention after runoff begins (inches) during the pre- and post-development conditions, respectively

Note: Eq. 2 is valid if P > 0.2*S. Otherwise, the term calculating the runoff depth

$(P-0.2S)^2/(P+0.8S) = 0$

The design storage $V_{LID} = D * A$ … **Eq. 3**

D = total depth of increase in stormwater runoff (inches),

A = drainage area or the area of the parcel being developed (square units).

The design storage of LID-IMP features, calculated using Eq. 3, ensures **no net**

increase in stormwater runoff volume for the design rainfall event.

Table 9: Analysis Method Comparison, illustrates the total depth of increase in stormwater runoff for a hypothetical representative site. The depth of increase in stormwater runoff calculated will be used in designing the LID-IMP features to handle all of the net increases in stormwater runoff generated from a parcel being developed (using Eq. 3).

4.3 NO NET INCREASE

"No net increase in stormwater runoff volume and sediment or nutrient from major renovation and construction projects" is defined as any increase in stormwater runoff volume or its quality from pre- to post-development conditions for the design storm event. This increase is to be managed on the project site through interception, infiltration, storage, and/or evapotranspiration process before the runoff is conveyed to receiving waters.

"No net increase …" is achieved by adopting and implementing LID techniques to handle runoff at its source or point of origination. LID IMP facilities designed and implemented properly will help improve the quality of stormwater runoff and reduce not just the peak flow rate, but eliminate any net increase in stormwater runoff volume (reaching the receiving water bodies) for the design storm event.

In meeting the goal of "no net increase …" the site designer shall comply with all local and State regulatory requirements and shall design SWM BMPs to control all regulated storm events to handle the peak rate and volume of discharge for flood control purposes. The principal goal of designing LID-IMPs is to achieve no net increase in stormwater runoff volume and sediment or nutrient loading from major renovation and construction projects for the design storm under consideration. The design storage volume of LID-IMP features, as calculated using Eq. 3, is a minimum requirement and must be followed to ensure no net increase in stormwater runoff volume for the design storm depth. This will assure the most practical solution and provide the maximum value for achieving an improved water quality discharge downstream. In certain geographical areas on optimal sites, the site designer will be able to improve the efficiency of the LID features to handle a portion of the flood control element of stormwater. For other rainfall events, which exceed normal intensities, the runoff will be collected and conveyed to the conventional SWM facilities. The conventional SWM facilities should be designed to discharge/outfall over a 24-hour period to reduce the peak flow rate below the pre-development outflow rate. Further, outfall water quality is improved through an additional treatment from conventional SWM facilities. To design the LID-IMP features for gross increases in stormwater runoff over a range of storm events for less frequent or high return period storm events would be impractical. Depending on site conditions, the use of conventional SWM facilities in conjunction with LID-IMPs may be required to handle unprecedented rainfall events and to avoid any downstream flooding of facilities and roadways that might become a life safety concern.

4.4 DESIGN CONSIDERATIONS

A few of the most relevant design considerations are listed below. For a more detailed list, the reader is referred to published literature given in the References.

1) In areas where soils have low infiltration rates, as determined by percolation tests, average depth of bio-infiltration practices is determined such that the volume held would infiltrate within 72-hours. For example, in soils with a low permeability rate (hydrologic soil group's C and D) of 0.05 inches/hour, the depth of infiltration basin = 72 hrs x 0.05 in/hr = 3.6 inches. Conservatively, the designer may opt to restrict this depth to 3.0 inches and provide a larger area to satisfy the LID volume requirement or may want to incorporate other LID practices, such as footprint reduction of impervious surfaces,

permeable pavers, etc., in conjunction with sizing of bio-infiltration facilities.

2) Flood control is based on protecting life and property. Flood control criteria are ultimately determined locally based on drainage needs and flood risk of any particular area and may go beyond LID design criteria to achieve the necessary level of flood protection.
3) If project site has limited land area for bio-infiltration practices, in order to satisfy the LID volume criteria, a combination of structural practices such as rain barrels and cisterns may be employed in addition to bio-infiltration practices. At any time the outflow from the structural practices must be controlled to the sum total of assimilating capacity of bio-infiltration practices provided downstream. For example, if a downstream bio-retention facility is of size 600 sq.ft, in soil type C with an infiltration rate of 0.15 in/hr, then the cisterns or rain barrels provided on site will discharge into bio-retention facility at a rate = 0.15 in/hr * 600 sq.ft /(12 in/ft * 3600 sec/hr) = 0.0021 cfs.
4) LID-IMP features are to be incorporated into the site plan at locations as close as possible to the origin of surface runoff from impervious areas. For example, runoff from roof drains is to be collected around the building (a minimum of 10-ft offset from the face of the building is required, refer to bio-retention design manuals for more details on specifications), and runoff from parking lots will be held in traffic islands and all along the perimeter. The central idea is to mimic pre-development hydrology.
5) Prefer planting of bio-retention facilities with native vegetation; refer to local plant specialists and horticulturists.
6) Design positive overflow system to capture excess rainfall-runoff.

4.5 CONSTRUCTION PERMIT PROCESS

Conventional SWM is a patterned response to maximize the efficiency of site landscaping and site design to achieve a reduction in the volume, duration, and pollutant loading of rainfall that ends up as runoff due to human development. The EPA's CWA defined an appropriate level of SWM to help to keep our rivers, lakes, and shorelines clean. The CWA established the base guidelines for SWM, but for the most part turned the execution of those guidelines over to the local state and/or municipal regulatory agencies. The States then promulgated additional or clarifying requirements to a minimum level as the EPA requirements to meet the needs of the local geographic conditions. For example, SWM techniques suitable for Florida are not necessarily appropriate to the arid Southwest. Almost all projects will require local or State construction permit in order to begin work. As such, the LID requirements must be complementary, and will overlay the State and local requirements for SWM. Without the regulatory acceptance of the SWM plan, 'no permit' means 'no project'. However, with the continuing development and destruction of natural settings most of these regulatory bodies have recognized that additional measures must be taken. For the State environmental regulators to improve stormwater discharge quality they must adopt alternative management methods or build treatment systems at the outfalls to treat the water. In order to avoid those large, expensive end-of-pipe treatment systems, an example was taken from nature to begin a process of retention, detention, infiltration, and treatment at the point of intersection (the point where a raindrop hits the earth). LID has gained widespread acceptance in the commercial and municipal arenas and is beginning to show up in most of the local and State regulations as an appropriate response to assist with traditional SWM. As the States adopt and change their requirements, the Navy's LID policies will increasingly align with the State's SWM requirements.

4.6 CONCLUSION

The methods for calculating, modeling, and sizing stormwater runoff are based on the *design storm*. Refer to the revised UFC 3-210-10 Low Impact Development, for design

criteria to determine the design storm for LID calculations. The design storm is a designation that defines a unit depth of rainfall in order to quantify the volume of rainfall generated for a given site. This data is needed in order to calculate the impact of human development on a particular piece of land.

The site designer shall use higher of either the 95th percentile rainfall depth, or the required water quality depth (as locally legislated) as the design storm event when calculating the LID volumes. This will result in a practical and reasonable approach (as being suggested by the EPA in their preliminary findings) in determining LID volumes. The design storm event is based on the regional 95th percentile, annual 24-hour rainfall depth averaged over several years (a minimum of 10-year daily, 24-hour, precipitation events would be used). The 'design storm' will be used to calculate pre- and post-development LID volumes in order to determine the amount of excess runoff that must be controlled on-site so that the site contributes no net increase downstream. LID integrated management techniques will be encouraged throughout the site design to ensure control and water quality objectives.

Three practical design methodologies were evaluated in this guidance manual to compare and contrast the methodologies. The first two that were evaluated used accepted practices within the engineering community and demonstrated acceptable results. The third methodology examined was based on regulatory guidance regarding water quality volumes.

The Navy has chosen to adopt the EPA's 95th percentile methodology to determine the design storm. Choosing the 95th percentile storm event as the LID design storm would result in a conservative design of LID-IMP features. Table 9 compares the three analysis methods for a few sample locations, by soil and type. Table 10 provides a summary of rainfall analysis for selected Navy facilities. Table 11 provides representative design data points for selected parameters in the determining the size of LID and BMP features.

The Navy criteria also recommend the use of industry standard methodologies for determining the LID volumes, such as TR-55 (Soil Conservation Services, 1986) or other recognized modeling software.

Table 10: Analysis Method Comparison

Existing Site Conditions	Existing Site Composite CN	Method 1.	Method 2.	Method 3.	Selected Design Storm Rainfall Depth (inches)	Developed Conditions[2] Composite CN	Depth of increase in Stormwater Runoff (inches)
Woods - good condition, HSG B	55	2.45	1.29[a]	1.00	1.29	76.5	0.12
Woods - poor condition, HSG D	83	0.61	1.45[b]	1.00	1.45	90.5	0.32
Pasture, grasslands - good condition, HSG B	61	1.92	1.29[a]	1.00	1.29	79.5	0.18
Pasture, grasslands - fair condition, HSG C	79	0.80	1.45[b]	1.00	1.45	88.5	0.33
Open space - lawns, park in fair condition, HSG B	69	1.35	1.29[a]	1.00	1.29	83.5	0.25
Residential districts - 1/3 acre, 30% impervious, HSG B	72	1.17	1.29[a]	1.00	1.29	85.0	0.27
Residential districts - 1/3 acre, 30% impervious, HSG C	81	0.70	1.45[b]	1.00	1.45	89.5	0.33
Industrial area - 72% impervious, HSG B	88	0.41	1.29[a]	1.00	1.29	93.0	0.25

Method 1: Design Rainfall Depth Based on Initial Abstraction (inches)

Method 2: Region1 - 95 Percentile Rainfall Depth (inches);

Method 3: First-Flush Rainfall Depth (inches)

1. In this example, regional refers to: a - Norfolk region; b- Cincinatti Region.

2. The developed conditions composite curve number is calculated as equal to existing composite CN plus a 50% of maximum full development potential of the parcel. A full development potential is where the entire parcel is developed with impervious surface resulting in a composite curve number of 98. Here, it is assumed 50% of maximum full development and calculated as = existing CN+0.5*(98-existing CN).

Table 11: Summary of Rainfall Analysis (1978-1997)

Description	State	Weather Station ID	Applicable Unit Identification Code						Annual Rainfall Depth (in)	99th Percentile	98th Percentile	95th Percentile	90th Percentile	75th Percentile	Rainy Days (>0.1")	Years of Available Record (1978-1997)
YUMA WSO AP	Arizona	**029660**	62974 (1 mi.)						3.38	2.20	1.46	0.98	0.73	0.43	8	17
BOULDER CREEK LOCAT RANCH	California	**041005**	44269 (mi.)						51.36	5.14	4.64	3.70	2.50	1.50	44	20
EL CENTRO 2 SSW	California	**042713**	45211 (1 mi.)						2.83	2.30	1.91	1.30	1.00	0.58	5	20
FAIRFIELD 3 NNE	California	**042935**	45653 (1 mi.)						21.55	3.26	2.48	1.80	1.30	0.90	31	20
FRESNO AIR TERMINAL	California	**043257**	44259 (27 mi.)						11.80	1.51	1.31	0.99	0.80	0.51	28	20
HETCH HETCHY	California	**043939**	64495 (36 mi.)						31.42	3.27	2.73	1.96	1.59	0.90	42	20
LOS ANGELES WSO ARPT	California	**045114**	44267 (17 mi.)	67399 (80 mi.)					13.95	2.56	2.30	1.64	1.23	0.77	23	20
MONTEREY NWSFO	California	**045802**	45210 (5 mi.)						20.10	1.70	1.47	1.37	1.14	0.85	31	2
SAN DIEGO WSO AIRPORT	California	**047740**	62473 (1 mi.)	00681 (30 mi)					11.69	1.74	1.58	1.28	1.01	0.60	23	20
VICTORVILLE PUMP PLANT	California	**049325**	3594A (60 mi.)	62204 (30 mi.)					6.47	1.73	1.60	1.12	0.90	0.60	12	19
COLORADO SPRINGS WSO AP	Colorado	**051778**	3455A (0 mi.)						17.06	2.11	1.59	1.12	0.85	0.48	37	20
JACKSONVILLE WSO AP	Florida	**084358**	57061 (18.75 mi.)	68931 (18 mi.)	68248 (25 mi.)	46134 (17.5 mi.)			52.35	3.46	2.86	2.12	1.59	0.87	74	20
KEY WEST WSO AIRPORT	Florida	**084570**	44222 (2 mi.)						39.68	3.76	2.95	1.92	1.41	0.76	59	20
MIAMI WSCMO AIRPORT	Florida	**085663**	30931 (2.5 mi.)						59.17	3.53	2.94	2.20	1.62	0.86	82	20
PANAMA CITY 5 NE	Florida	**086842**	44223 (9.5 mi.)	44224 (97 mi.)					56.51	4.24	3.30	2.40	1.80	1.10	63	20
TALLAHASSEE WSO AP	Florida	**088758**	67004 (83 mi.)						62.14	4.26	3.58	2.37	1.76	1.07	76	20
TAMPA WSO AIRPORT	Florida	**088788**	47030 (8 mi.)						46.24	3.22	2.70	1.92	1.48	0.88	66	20
SAVANNAH WSO AIRPORT	Georgia	**097847**	00263 (32 mi.)	44227 (35 mi.)					49.54	3.17	2.80	2.03	1.52	0.85	70	20
GUAM WSMO	Guam	**914229**	62395 (5 mi.)						95.12	4.24	3.27	2.20	1.45	0.70	143	14
HOKULOA 725.2	Hawaii	**511540**	44251 (mi.)						33.02	5.11	4.00	2.64	1.70	0.80	40	20
HONOLULU WSFO AP 703	Hawaii	**511919**	62742 (3 mi.)	47771 (9.5 mi.)					19.07	3.72	3.08	2.11	1.31	0.61	29	20
KEKAHA 944	Hawaii	**514272**	30614 (mi.)						20.08	4.83	3.86	2.80	1.91	0.90	24	20
CHICAGO OHARE WSO AP	Illinois	**111549**	65113 (23 mi.)						36.24	2.57	1.90	1.49	1.09	0.65	67	20
EVANSVILLE WSO AP	Indiana	**122738**	44204 (58 mi.)						43.72	2.78	2.16	1.74	1.25	0.78	71	20
NEW ORLEANS WSMO AIRPORT	Louisiana	**166660**	44218 (9 mi.)						65.10	4.38	3.33	2.48	1.81	1.06	77	20
SHREVEPORT AP	Louisiana	**168440**	45603 (11 mi.)						52.06	3.94	3.32	2.33	1.76	1.01	66	20
PORTLAND WSFO AP	Maine	**176905**	44214 (24 mi.)						42.49	2.88	2.23	1.55	1.17	0.71	71	20
BALTIMORE WSO ARPT	Maryland	**180465**	44201 (15.5 mi.)	0417A (14 mi.)					40.29	2.36	1.94	1.53	1.16	0.71	71	20
PATUXENT RIVER	Maryland	**186915**	00019 (0 mi.)	47370 (33 mi.)					24.97	2.90	2.58	1.80	1.30	0.80	36	20
BILOXI 9 WNW	Mississippi	**220797**	62604 (4 mi.)						60.53	5.64	4.04	2.74	2.07	1.20	59	9
TRENTON STATE COLLEGE	New Jersey	**288880**	3806A (30 mi.)						38.50	2.80	2.60	1.90	1.40	0.90	54	20
ALBUQUERQUE WSFO AIRPORT	New Mexico	**290234**	65460 (3 mi.)						9.74	1.15	1.06	0.88	0.65	0.39	25	20
MOREHEAD CITY	North Carolina	**315830**	00146 (16 mi.)	67001 (34 mi.)					38.57	4.10	3.30	2.40	1.70	1.00	46	20
HARRISBURG CAPITAL CITY	Pennsylvania	**363699**	68378 (6 mi.)						32.91	2.40	2.18	1.57	1.11	0.65	60	8
HARRISBURG WSO CITY OFFICE	Pennsylvania	**363710**	68378 (4.5 mi.)						30.58	2.05	1.84	1.32	1.08	0.70	56	8
MIDDLETOWN HARRISBURG INTL AP	Pennsylvania	**365703**	68378 (10 mi.)						34.91	2.46	2.25	1.39	1.10	0.69	62	7
PHILADELPHIA WSO AP	Pennsylvania	**366889**	45727 (2.5 mi.)						40.68	2.46	2.05	1.60	1.18	0.70	70	20
BLOCK ISLAND WSO AP	Rhode Island	**370896**	44210 (29 mi.)						33.37	2.54	2.08	1.52	1.23	0.74	56	16
NEWPORT ROSE	Rhode Island	**375215**	44211 (1.5 mi.)						32.86	2.80	2.30	1.79	1.30	0.80	46	20
CHARLESTON WSO AIRPORT	South Carolina	**381544**	69229 (4 mi.)						50.79	3.76	3.14	1.97	1.49	0.82	73	20
MEMPHIS WSFO	Tennessee	**405954**	44221 (18 mi.)						53.19	3.37	2.83	2.14	1.70	0.96	70	18
CORPUS CHRISTI WSO AP	Texas	**412015**	45974 (27 mi.)	68891 (11 mi.)	44215 (10 mi.)				32.44	4.40	3.42	2.50	1.73	0.91	42	20
NORFOLK WSO AIRPORT	Virginia	**446139**	62470 (5.7 mi.)						44.36	2.67	2.26	1.63	1.23	0.73	74	20
WASHINGTON NATL WSO AP	Virginia	**448906**	00025 (2.5 mi.)	00029 (1.5 mi.)	44252 (9.5 mi.)	44200 (22 mi.)	48429 (11 mi.)	45967 (25 mi.)	38.37	1.94	1.76	1.37	1.12	0.69	70	20
WILLIAMSBURG 2 N	Virginia	**449151**	44247 (11 mi.)						34.17	2.50	2.20	1.61	1.30	0.80	50	20
SEATTLE TACOMA AP WBAS	Washington	**457473**	44255 (17 mi.)						37.11	1.76	1.40	1.03	0.79	0.50	87	20
SEATTLE EMSU WSO	Washington	**457458**	44219 (mi.)						36.04	1.82	1.44	1.00	0.78	0.47	84	20
FRANKLIN 2 N	West Virginia	**463215**	31188 (5 mi.)						24.08	1.80	1.70	1.30	1.00	0.70	41	17

Table 12: Determining the Size of LID & BMP Required For Various Development Scenarios in Different Soil Types

	Location	10-Yr, 24-hr Rainfall Depth (inches)	95th Percentile Rainfall Depth (inches)	PRE Composite CN	Percent Impervious Developed	POST Composite CN	Net increase in Stormwater Runoff (inches)	Required LID Volume (ac. inch)	Area required for 6" depth bio-retention cells (ac)	3 ft depth of BMP - Area required to control 10-yr flood (ac)	% Area required for LID & BMP
VIRGINIA	Virginia - Norfolk - HSG A	6	1.29	30.00	25% Develop.	47.00	0.00	0.00	0.00	0.016	1.59%
	Virginia - Norfolk - HSG B	6	1.29	55.00		65.75	0.01	0.01	0.00	0.017	1.88%
	Virginia - Norfolk - HSG C	6	1.29	70.00		77.00	0.09	0.09	0.02	0.018	3.30%
	Virginia - Norfolk - HSG D	6	1.29	77.00		82.25	0.11	0.11	0.02	0.017	3.58%
	Virginia - Norfolk - HSG A	6	1.29	30.00	40% Develop.	57.20	0.00	0.00	0.00	0.031	3.06%
	Virginia - Norfolk - HSG B	6	1.29	55.00		72.20	0.06	0.06	0.01	0.025	3.57%
	Virginia - Norfolk - HSG C	6	1.29	70.00		81.20	0.18	0.18	0.03	0.023	5.26%
	Virginia - Norfolk - HSG D	6	1.29	77.00		85.40	0.21	0.21	0.03	0.021	5.58%
	Virginia - Norfolk - HSG A	6	1.29	30.00	50% Develop.	64.00	0.00	0.00	0.00	0.042	4.23%
	Virginia - Norfolk - HSG B	6	1.29	55.00		76.50	0.12	0.12	0.02	0.032	5.22%
	Virginia - Norfolk - HSG C	6	1.29	70.00		84.00	0.25	0.25	0.04	0.026	6.88%
	Virginia - Norfolk - HSG D	6	1.29	77.00		87.50	0.28	0.28	0.05	0.024	7.14%
	Virginia - Norfolk - HSG A	6	1.29	30.00	60% Develop.	70.80	0.05	0.05	0.01	0.053	6.11%
	Virginia - Norfolk - HSG B	6	1.29	55.00		80.80	0.21	0.21	0.03	0.039	7.32%
	Virginia - Norfolk - HSG C	6	1.29	70.00		86.80	0.35	0.35	0.06	0.030	8.81%
	Virginia - Norfolk - HSG D	6	1.29	77.00		89.60	0.37	0.37	0.06	0.027	8.92%
	Virginia - Norfolk - HSG A	6	1.29	30.00	75% Develop.	81.00	0.21	0.21	0.04	0.072	10.78%
	Virginia - Norfolk - HSG B	6	1.29	55.00		87.25	0.40	0.40	0.07	0.049	11.69%
	Virginia - Norfolk - HSG C	6	1.29	70.00		91.00	0.53	0.53	0.09	0.036	12.47%
	Virginia - Norfolk - HSG D	6	1.29	77.00		92.75	0.54	0.54	0.09	0.031	12.11%
FLORIDA	Florida - Jacksonville, HSG A	7	1.71	30.00	25% Develop.	47.00	0.00	0.00	0.00	0.022	2.23%
	Florida - Jacksonville, HSG B	7	1.71	55.00		65.75	0.08	0.08	0.01	0.021	3.34%
	Florida - Jacksonville, HSG C	7	1.71	70.00		77.00	0.16	0.16	0.03	0.021	4.75%
	Florida - Jacksonville, HSG D	7	1.71	77.00		82.25	0.17	0.17	0.03	0.020	4.88%
	Florida - Jacksonville, HSG A	7	1.71	30.00	40% Develop.	57.20	0.01	0.01	0.00	0.040	4.12%
	Florida - Jacksonville, HSG B	7	1.71	55.00		72.20	0.18	0.18	0.03	0.030	6.07%
	Florida - Jacksonville, HSG C	7	1.71	70.00		81.20	0.29	0.29	0.05	0.027	7.57%
	Florida - Jacksonville, HSG D	7	1.71	77.00		85.40	0.31	0.31	0.05	0.025	7.57%
	Florida - Jacksonville, HSG A	7	1.71	30.00	50% Develop.	64.00	0.06	0.06	0.01	0.053	6.22%
	Florida - Jacksonville, HSG B	7	1.71	55.00		76.50	0.29	0.29	0.05	0.037	8.45%
	Florida - Jacksonville, HSG C	7	1.71	70.00		84.00	0.40	0.40	0.07	0.030	9.77%
	Florida - Jacksonville, HSG D	7	1.71	77.00		87.50	0.41	0.41	0.07	0.028	9.59%
	Florida - Jacksonville, HSG A	7	1.71	30.00	60% Develop.	70.80	0.16	0.16	0.03	0.066	9.25%
	Florida - Jacksonville, HSG B	7	1.71	55.00		80.80	0.42	0.42	0.07	0.043	11.36%
	Florida - Jacksonville, HSG C	7	1.71	70.00		86.80	0.53	0.53	0.09	0.034	12.30%
	Florida - Jacksonville, HSG D	7	1.71	77.00		89.60	0.53	0.53	0.09	0.031	11.83%
	Florida - Jacksonville, HSG A	7	1.71	30.00	75% Develop.	81.00	0.43	0.43	0.07	0.087	15.89%
	Florida - Jacksonville, HSG B	7	1.71	55.00		87.25	0.70	0.70	0.12	0.054	17.05%
	Florida - Jacksonville, HSG C	7	1.71	70.00		91.00	0.77	0.77	0.13	0.040	16.87%
	Florida - Jacksonville, HSG D	7	1.71	77.00		92.75	0.73	0.73	0.12	0.035	15.70%
MISSISSIPPI	Mississippi - Biloxi, HSG A	8	2.42	30.00	25% Develop.	47.00	0.00	0.00	0.00	0.029	2.94%
	Mississippi - Biloxi, HSG B	8	2.42	55.00		65.75	0.22	0.22	0.04	0.025	6.14%
	Mississippi - Biloxi, HSG C	8	2.42	70.00		77.00	0.27	0.27	0.05	0.024	6.90%
	Mississippi - Biloxi, HSG D	8	2.42	77.00		82.25	0.26	0.26	0.04	0.023	6.66%
	Mississippi - Biloxi, HSG A	8	2.42	30.00	40% Develop.	57.20	0.10	0.10	0.02	0.050	6.67%
	Mississippi - Biloxi, HSG B	8	2.42	55.00		72.20	0.43	0.43	0.07	0.035	10.56%
	Mississippi - Biloxi, HSG C	8	2.42	70.00		81.20	0.48	0.48	0.08	0.030	10.96%
	Mississippi - Biloxi, HSG D	8	2.42	77.00		85.40	0.45	0.45	0.07	0.028	10.28%
	Mississippi - Biloxi, HSG A	8	2.42	30.00	50% Develop.	64.00	0.24	0.24	0.04	0.064	10.48%
	Mississippi - Biloxi, HSG B	8	2.42	55.00		76.50	0.60	0.60	0.10	0.041	14.11%
	Mississippi - Biloxi, HSG C	8	2.42	70.00		84.00	0.64	0.64	0.11	0.034	13.99%
	Mississippi - Biloxi, HSG D	8	2.42	77.00		87.50	0.59	0.59	0.10	0.031	12.91%
	Mississippi - Biloxi, HSG A	8	2.42	30.00	60% Develop.	70.80	0.44	0.44	0.07	0.079	15.34%
	Mississippi - Biloxi, HSG B	8	2.42	55.00		80.80	0.81	0.81	0.13	0.048	18.24%
	Mississippi - Biloxi, HSG C	8	2.42	70.00		86.80	0.81	0.81	0.14	0.038	17.33%
	Mississippi - Biloxi, HSG D	8	2.42	77.00		89.60	0.74	0.74	0.12	0.034	15.74%
	Mississippi - Biloxi, HSG A	8	2.42	30.00	75% Develop.	81.00	0.89	0.89	0.15	0.102	24.93%
	Mississippi - Biloxi, HSG B	8	2.42	55.00		87.25	1.19	1.19	0.20	0.059	25.77%
	Mississippi - Biloxi, HSG C	8	2.42	70.00		91.00	1.12	1.12	0.19	0.044	23.04%
	Mississippi - Biloxi, HSG D	8	2.42	77.00		92.75	0.99	0.99	0.17	0.039	20.42%

4.7 RESOURCE INDEX

1. *BMP Modeling Concepts and Simulation* (USEPA, 2006): www.epa.gov/nrmrl/pubs/600r06033/epa600r-06033toc.pdf
2. *Low-Impact Development Hydrologic Analysis* (Prince George's County, MD, Dept. of Environmental Resources, 1999): www.epa.gov/nps/lid_hydr.pdf
3. A Design Guide for Implementers and Reviewers Low Impact Development Manual for Michigan (Southeast Michigan Council of Governments, SEMCOG 2008): www.semcog.org
4. Urban Hydrology for Small Watersheds, TR-55, Natural Resources Conservation Services, June 1986 (Soil Conservation Services, 1986)
5. Technical Guidance on Implementing Section 438 of the Energy Independence and Security Act (February 2009)
6. Unified Facilities Criteria (UFC) – Design: Low Impact Development Manual (UFC 3-210-10, October 2004)

Acknowledgements:

This document would not be possible without the guidance and assistance of Mr. Leonard Harrell and Mr. Paul Kidd of NAVFAC Atlantic's Capital Improvements Business Line, and the LID team throughout the NAVFAC FECs that generously assisted with time and suggestions.

Document prepared by:

URS Group, Inc.

277 Bendix Road, Suite 500

Virginia Beach, Virginia 23452

(757) 499-4224

under contract to the National Institute of Building Sciences (NIBS).

Low Impact Development Waiver Form

(Classification)

NAVY LOW IMPACT DEVELOPMENT WAIVER FORM	1. TODAY'S DATE	2. SUSPENSE DATE
3. PROJECT TITLE	3a. CONTRACT NUMBER	
	3b. MODIFICATION NUMBER	
4. DESIGN/CONSTRUCTION ORGANIZATION NAME(ES) AND ADDRESS(ES)	4a. NAME OF RESPONSIBLE PERSON/TITLE	
	4b. TELEPHONE NUMBER	
5. CONTRACT OFFICER NAME(ES) AND ADDRESS(ES)	5a. PROJECT NUMBER	
	5b. TASK NUMBER	
	5c. NAME OF RESPONSIBLE PERSON/TITLE OR RANK	
	5d. TELEPHONE NUMBER	
6. PROJECT DESCRIPTION		
6a. SUPPORTING DOCUMENTATION ☐ PLANS SUBMITTED ☐ STORM WATER CALCULATIONS SUBMITTED ☐ SUPPORTING DOCUMENTATION SUBMITTED		
7. WHY LID IS NOT PRACTICABLE FOR THIS PROJECT SITE		
7a. REASON NOT PRACTICABLE ☐ TECHNICAL ☐ ECONOMICAL ☐ OTHER		
8. PLANNED STORM WATER MANAGEMENT FEATURES (when LID is not practicable)		

9. SIGNATURES			COMMENTS
_____ _____ Project Manager (PM) Date	☐ APPROVED	☐ DISAPPROVED	
_____ _____ Design Manager (DM) Date	☐ APPROVED	☐ DISAPPROVED	
_____ _____ EV Department Eng (EDE) Date	☐ APPROVED	☐ DISAPPROVED	
_____ _____ FEAD/ROICC Date	☐ APPROVED	☐ DISAPPROVED	
_____ _____ Commanding Officer Date	☐ APPROVED	☐ DISAPPROVED	

WAIVER FORM INSTRUCTIONS

Parentheses at top of form: Fill in the classification (UNCLASSIFIED, CONFIDENTIAL, etc) in the parentheses at the top of the form.

Block 1. Enter today's date or due date of contract deadline. The Navy standard date format is YYYYMMDD. Example: 200070131.

Block 2. The format is YYMMDD. This suspense date should be completed by the Environmental Department Engineer (EDE) and/or Engineer In Charge (EIC). Enter the standard date the response is due to the contractor. (e.g. 30 days of receipt of contractors proposal) or Enter the date the response is due to the contractor if the review is time sensitive (e.g. 3, 10 days of receipt of contractor's proposal).

Block 3. Enter the Project Name and the LID technique or storm water Management feature.

Block 3a. Enter the contract number.

Block 3b. Enter the contract modification number.

Block 4. Enter the names and addresses of the engineering/design firm and the construction contractor.

Block 4a. - 4b. Enter the responsible performing organizations point of contact and position title (Lead Engineer, Manager, President, etc) and office phone number. This information is especially important to ensure any questions related to the project and site design can be quickly directed to the appropriate point of contact, avoiding delays in processing the action.

Block 5. Enter the Contract Agent Name and address.

Block 5a. Enter the project number.

Block 5b. Enter the task number (if applicable).

Block 5c -5d. Enter the responsible Contract Agent/Action officer's name, rank and/or position title, and office phone number. This information is especially important to ensure any questions related to the project and site design can be quickly directed to the appropriate point of contact, avoiding delays in processing the action.

Block 6. Provide a fact-filled background and summary of the project. Be sure to included details such as the project location, size, issues and the requirements. This discussion should tell the story of the planned project without "begging questions." The final approval authority should fully understand what the project is and why this project is necessary.

Block 6a. Select supporting documentation supporting the project. The site plans, storm water calculations and relevant supporting documentation for the selected LID design or the planned storm water management feature if LID is not selected, should be submitted along with the waiver form to ensure a thorough review.

Block 7. Explain which LID goals could not be achieved and why achieving LID goals was not practicable. Provide sufficient descriptions, drawings, and other necessary information to

confirm the applicability of the Waiver. The final approval authority should fully understand the reasons LID is not practicable for the project(s). Submit supporting documentation.

Block 7a. Select a reason LID is not practicable for this project, (e.g., conflicts with existing State laws, policies or requirements, contaminated sites).

Block 8. Describe the planned storm water management features if LID is not selected. Provide sufficient descriptions, drawings, and other necessary information to evaluate the proposed project. Submit supporting documentation.

Block 9. All parties must review, approve/disapprove, and sign the form for a LID waiver.

CAPITAL IMPROVEMENTS

NAVFAC Naval Facilities Engineering Command

ENGINEERING & CONSTRUCTION Bulletin

Issue No. 2010-01 | 7 October 2009 | Type: Policy

Subject: Marine Corps BEQ, Gross Building Allowance (GBA) Calculation Change

Reference: (a) UFC 4-721-10: Design: Navy and Marine Corps Bachelor Housing, dtd 31 July 2002, w/ Change 2 dtd 4 Oct 2007.

Attachment: (1) Commandant of the Marine Corps letter 11103 LFF-3 of Sept 11 2009, with enclosures.

1. Purpose.

Provide guidance for calculating the maximum allowable Gross Building Area (GBA) as it relates to enclosed interior corridors and open breezeways for Marine Corps Bachelor Enlisted Quarters (BEQ).

2. Background.

As part of the Commandant of the Marine Corps (CMC) Bachelor Enlisted Quarters Red-Line initiative, a review of the existing 2+0 design guidance, in coordination with Naval Facilities Engineering Command (NAVFAC), was undertaken and incorporated into reference (a). This review resulted in a new maximum allowable GBA of 47 square meters per room, which includes the room itself, common areas, circulation areas, and mechanical, electrical and communication space requirements.

Marine Corps BEQs utilize either open breezeways or enclosed interior corridors as circulation areas, depending on climate region. Open breezeways have traditionally been counted at one-half scope against the GBA, while fully enclosed interior corridors have been counted as full-scope. This has resulted in disparity between the designs and the allowable construction size of BEQ projects. This policy change is intended to eliminate the disparity and provide more standardization to Marine Corps BEQ designs.

3. Applicability.

This ECB applies to Marines Corps Bachelor Enlisted Quarters only.

4. Policy and Implementation.

Effective immediately, per attachment (1), the square footage of interior corridors for Marine Corps Bachelor Enlisted Quarters will be calculated as "one-half scope" (i.e., half square footage) when determining total allowable GBA.

Issue POC: David M. Young, david.m.young@navy.mil (757) 636-2674

ECB posted at https://portal.navfac.navy.mil/portal/page/portal/ci/tab_ci_ecb

5. Action.

This policy and implementation is effective immediately, and is fully retroactive for any FY08/09 projects that can be affected without unreasonable re-design or construction cost increases Changes to criteria documents and NAVFAC standard contract templates will be implemented. Project managers and contracting officers will ensure that all applicable contracts are in compliance with this guidance.

6. Points of Contact.

For clarification or additional information, please contact:

For Marine Corps Bachelor Housing: LtCol Patrick Hittle or Mrs. Darlene McCoy, HQMC LFF-3, commercial 703-695-9767 (DSN 225) or email patrick.r.hittle@usmc.mil or darlene.mccoy@usmc.mil.

For Marine Corps MILCON: Mr. Brian Sanders, HQMC LFL, commercial 703-695-8202 (DSN 225) or e-mail brian.sanders1@usmc.mil.

For NAVFAC: David M. Young, NAVFAC ATLANTIC CI ARCH, commercial 757-322-4212 (DSN 262), or email david.m.young@navy.mil.

This document has been reviewed by Headquarters, US Marine Corps and is fully applicable to all USMC installations.

JOSEPH E. GOTT, P.E.
Chief Engineer and Director,
Capital Improvements

DEPARTMENT OF THE NAVY
HEADQUARTERS UNITED STATES MARINE CORPS
2 NAVY ANNEX
WASHINGTON, DC 20380-1775

IN REPLY REFER TO:
11103
LFF-3
SEP 11 2009

From: Commandant of the Marine Corps (LF)
To: Distribution List

Subj: MARINE CORPS BARRACKS CONSTRUCTION STANDARD - BEQ CORRIDOR SQUARE FOOTAGE CALCULATION

Encl: (1) CMC (LFF-3) Memo Ser 11103/LFF-3 dtd 27 Aug 2009
(2) ASN(I&E) Memo dtd Sep 4 2009

1. Enclosures (1) and (2) are forwarded for your appropriate action in designing and executing ongoing and future MILCON barracks projects. Specifically, as approved by enclosure (2), square footage of interior corridors for bachelor enlisted quarters (BEQs) will be calculated as "half scope" (i.e., half square footage) in determining total facility square footage.

2. This policy is effective immediately.

3. My points of contact for this matter are Mr. Brain Sanders, (MILCON), 703-695-8202/DSN 225, brian.sanders1@usmc.mil and LtCol Patrick Hittle (BEQ Program), 703-695-9767/DSN 225, patrick.r.hittle@usmc.mil.

E. G. PAYNE
Major General, U.S. Marine Corps
Assistant Deputy Commandant
Installations and Logistics
(Facilities)

Distribution:
CG MARCORBASESLANT
CG MARCORBASESPAC
CG MARFORRES NEW ORLEANS LA
CG MCCDC QUANTICO VA
CO MARBKS WASHINGTON DC
NAVFACENGCOM (CI)

Copy to:
CG MARFORCOM NORFOLK VA
CG MARFORPAC CAMP SMITH HI
CG MCIWEST
CG MCIEAST
CG MCB CAMP BUTLER OKINAWA JA
CG MCRD/WRR SAN DIEGO CA
CG MCRD/ERR PARRIS ISLAND SC
CG MCAGCC TWENTYNINE PALMS CA
CO MCB HAWAII
CO MCB QUANTICO VA
CO MCB CAMP PENDLETON CA
CO MCB CAMP LEJEUNE NC

Subj: MARINE CORPS BARRACKS CONSTRUCTION STANDARD - BEQ CORRIDOR SQUARE FOOTAGE CALCULATION

CO MCLB BARSTOW CA
CO MCLB ALBANY GA
CO MCMWTC BRIDGEPORT CA
CO MCSF BLOUNT ISLAND FL
CO MCAS MIRAMAR CA
CO MCAS CAMP PENDLETON CA
CO MCAS YUMA AZ
CO MCAS BEAUFORT SC
CO MCAS CHERRY POINT NC
CO MCAS NEW RIVER NC
CO MCAS IWAKUNI JA
CO MCAF QUANTICO VA
CO HQBN HQMC ARLINGTON VA

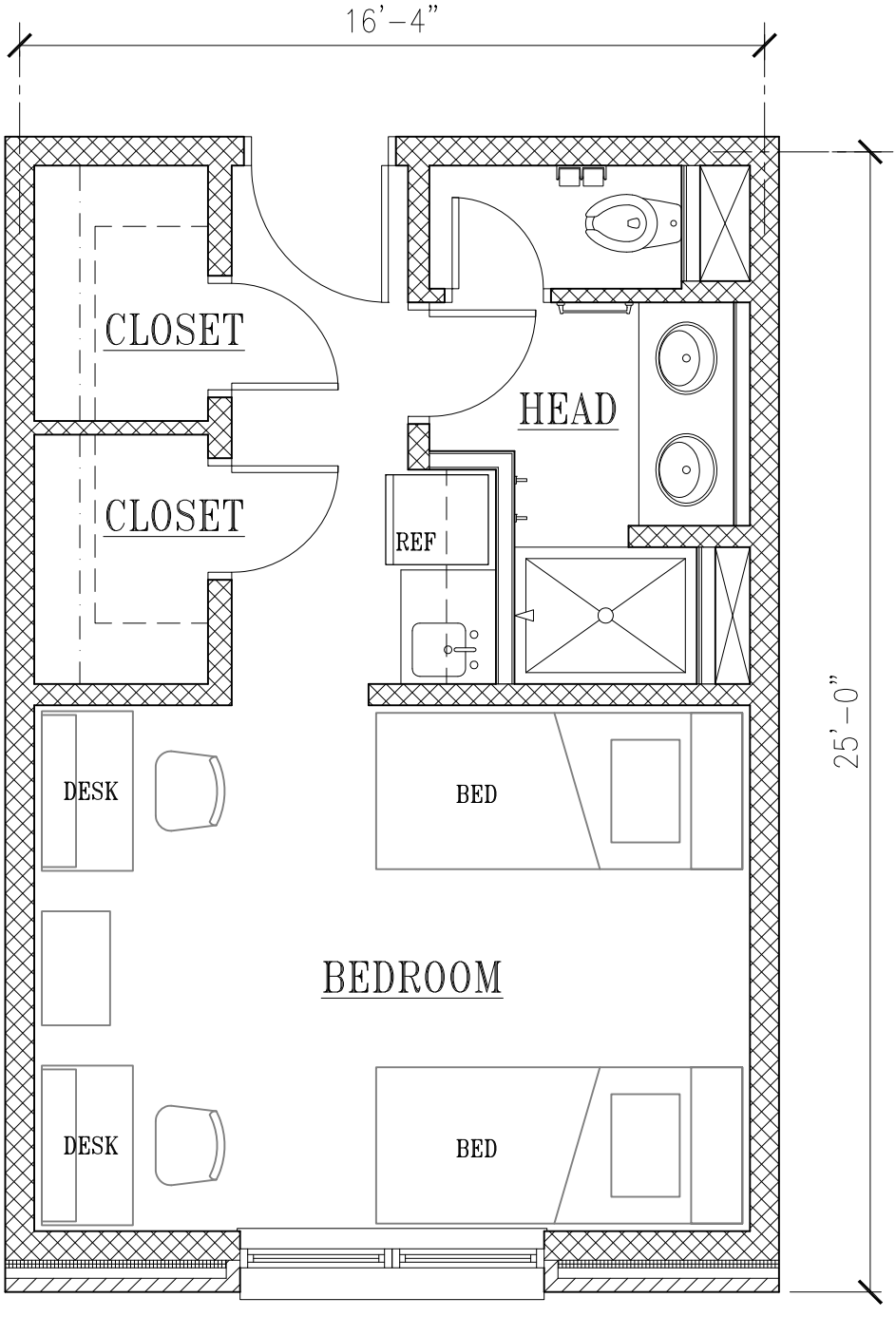

TYPICAL ROOM MODULE LAYOUT PLAN

MARINE CORPS BACHELOR HOUSING CRITICAL CHECKLIST

10/24/2008

MARINE CORPS BACHELOR HOUSING CRITICAL CHECKLIST

This checklist is designed to assure consistency in the NAVFAC and Marine Corps "Grow the Force" expansion of the Marine Corps bachelor housing quarters program. It presents basic design criteria and construction guidance for Marine Corps bachelor housing, and applies to both enlisted and officer quarters. This checklist is not intended as the definitive list of all requirements. Users must refer to the Unified Facility Criteria (UFC) and the Project Request for Proposal (RFP) for complete information.

Criteria may be found at the Whole Building Design Guide web site http://dod.wbdg.org/.

- **Use UFC 4-721-10, *Navy and Marine Corps Bachelor Housing* for design guidance.**
- **Use UFC 1-200-01, *General Building Requirements*, for guidance on the use of model building codes.**

This checklist provides a basic overview of information required for review of Marine Corps Bachelor Housing design. The RFP and UFC portions of the checklist are applicable to projects inside and Outside the Continental United States (OCONUS). The RFP portion of the checklist may require some adjustment if used OCONUS. It applies to new facilities and restoration and modernization projects, providing the information needed to review the RFP for a specific project.

The RFP portion of the checklist highlights facility requirements that were specifically discussed with Marine Corps Head Quarters relating to the Marine Corps BEQ Standard Template. Facility design and construction should not deviate from the checklist items that were "directed" by Marine Corps Head Quarters or "fixed" by agreement between Marine Corps Head Quarters and NAVFAC. Any deviation from "directed" or "fixed" requirements listed must be granted by Marine Corps Head Quarters.

For questions concerning this list contact:

David M. Young 757.322.4212

H. Calvin Crofford 757.322.4237

ITEM NUMBER	CHECK OFF	REQUIREMENT LOCATION	USMC BQ CRITICAL CHECKLIST	DIRECTED REQUIREMENT MCHQ DIRECTION	FIXED REQUIREMENT MCHQ/ NAVFAC DECISION	REQUIREMENT SUPPORTING MCHQ CONCERN
RFP REQUIREMENTS – PART 2						
1		**Part 2 – 013119.0520**	PAK Meeting Essentials: • Involvement of whole Design Team especially the MC Component. • Utilize the Concept Design Workshop requirements for design development listed 013119.0520 Appendix • Involvement of Contractor's cost estimator in Concept Design Workshop to assure the proposed design is within the budget. • Identify any Critical Path Submittals (for fast tracking) that are acceptable to Government and Contractor. • Agree upon Contractor's schedule, micro for design, and macro for construction.	✔ ✔	✔ ✔	✔
2		**Part -2 013300.0520**	Assure Government gets all submittals identified for Government approval / surveillance		✔	
3		**Part -2 013310.0520**	Provide a LEED-NC Certified building in FY-08 and LEED-NC Silver rated building starting in FY-09. All sustainable building submittals must be evaluated by United States Green Building Council		✔	
4		**Part-2 013310.0520**	Organize the lobby area to prominently display the Facility Recognition Plaque and the LEED Certification Plaque			✔
5		**Part-2 013513.0520**	Involve the MC Facility User in Model Unit approval	✔		
6		**Part-2 014500.0520** **Part-3 Chapter 2** **Part-4 Z10**	Provide commissioning in accordance with RFP Parts 2, 3, 4, and US Green Building Council		✔	
RFP REQUIREMENTS - PART 3						
1		**Part-3 Chapter 1** **Part-3 Chapter 4**	The following are basic design features of the Standard MC BEQ template; • Enclosed central corridor (at MCI East) and open center breezeway (at MCI West) giving access to the Sleeping Rooms. • Double occupancy rooms • Provide Sleeping Room Plan and minimum indicated Interior Heights	✔ ✔ ✔		
2		**Part-3 Chapter 5**	Use of concrete or masonry as an exterior finish material. THIS IS BEING RECONSIDERED BY MC HQ.	✔		
3		**Part-3 Chapter 5**	Do not use tilt-wall construction. THIS IS BEING RECONSIDERED BY MC HQ. If allowed it will require Contractor Quality Control to be added to the RFP for the Tilt-Wall Construction.	✔		
4		**Part-3 Chapter 5**	Use concrete or masonry as an interior wall finish material, except in RFP identified locations	✔		

ITEM NUMBER	CHECK OFF	REQUIREMENT LOCATION	USMC BQ CRITICAL CHECKLIST	DIRECTED REQUIREMENT MCHQ DIRECTION	FIXED REQUIREMENT MCHQ/ NAVFAC DECISION	REQUIREMENT SUPPORTING MCHQ CONCERN
5		**Part-3 Chapter 5 Part-3 Chapter 6/ CI0 Gen Systems Reqmts Part -4/C1010 Part**	Sleeping Room Area Requirements; Only gypsum board allowed at interior chase walls and also the interior face of exterior wall at Camp Pendleton. Must meet impact resistant requirements. (Two layers of gypsum board)		✔	
6		**Part-3 Chapter 5**	Sleeping Room entrance doors require visual peep hole hardware to identify people outside of door without opening door	✔		
7		**Part-3 Chapter 5**	Heavy duty wire shelving required in Sleeping Room Closets	✔		
8		**Part-3 Chapter 5**	Continuous ventilation required in Sleeping Room Closets	✔		
9		**Part-3 Chapter 5 Part-4 B20**	ANSI A250.8-Level 4 Exterior metal doors and frames with in exterior walls not using Storefront assemblies. Use BHMA A156.13 Series 1000, Security Grade 1 hardware			✔
10		**Part-3 Chapter 5 Part-4 B20**	Use non-removable pin hinges on outward opening exterior and closet doors.		✔	
11		**Part-3 Ch 6/C10-Gen SYS Reqmts Part-4 C1030009**	Provide AWI Custom Grade cabinets to including additional PTS requirements			✔
12		**Part-3 Chapter 5**	Sleeping Room Area Electrical Requirements; Provide dedicated circuits and connections for the following special outlets: • In the bedroom provide four 20-ampere quadraplex receptacles on two dedicated 20-ampere circuits. • In the service area provide three receptacles; one dedicated 20-ampere appliance circuit and Ground-Fault Circuit Interruptor (GFI) receptacle above the counter for the microwave oven, one dedicated 20-ampere appliance circuit and receptacle for the refrigerator, one dedicated 20-ampere circuit and GFI receptacle at countertop height. • Provide a 20-ampere GFI receptacle on a dedicated 20-ampere circuit in the bathroom.		✔	
13		**Part-3 Chapter 5**	Sleeping Room Area Lighting Requirements; • Provide general lighting throughout the individual room plan to achieve average maintained illumination of 30 foot-candles. Lighting shall coordinate with the Structural Interior Design (SID) package and shall be installed to limit “strobe effect” caused by ceiling fan. • Provide valance lighting over bathroom lavatory. Valance lighting may be integral to the two medicine cabinets. • Provide lighting in each closet with motion-activated switch.	✔		

ITEM NUMBER	CHECK OFF	REQUIREMENT LOCATION	USMC BQ CRITICAL CHECKLIST	DIRECTED REQUIREMENT MCHQ DIRECTION	FIXED REQUIREMENT MCHQ/ NAVFAC DECISION	REQUIREMENT SUPPORTING MCHQ CONCERN
14		**Part-3 Chapter 5**	Sleeping Room Ceiling Fan Requirements; • Operated by wall switch. • Ceiling fan light kits are prohibited. • Ceiling fan shall have a neutral painted finish. • Ceiling fan shall be securely mounted per manufacturer's installation instructions	✔		
15		**Part-3 Chapter 5**	Sleeping Room Area Television Requirements; • Provide one CATV outlet on each opposing side wall.		✔	
16		**Part-3 Chapter 5**	Sleeping Room Area Telecommunications Requirements • Provide telecommunication outlets. • Each outlet shall have two 8 pin RJ 45 jacks. • Provide two outlets on each opposing side wall.		✔	
17		**Part-3 Chapter 5** **Part- 4 B30**	Standing Seam Metal roof required on facility	✔		
18		**Part-3 Chapter 5**	Hard ceilings such as concrete and gypsum board are required in living spaces – See Rm. Reqmts.	✔		
19		**Part-3 Chapter 5**	Solid Surface counter tops required	✔		
20		**Part-3 Chapter 5**	Use flush valve plumbing fixtures		✔	
21		**Part-3 Chapter 5**	Solid surface shower units with terrazzo receptors required.			✔
22		**Part-3 Chapter 5**	Provide visual control and easy circulation between the Laundry and Multi Purpose Room. Patrons of the Laundry Room need visual control of possessions while participating in Multi Purpose Room activities.	✔		
23		**Part-3 Chapter 5**	Locate Laundry Room on first floor and provide outdoor supply air directly to the dryers. Do not utilize Laundry room conditioned air for dryer supply air.		✔	
24		**Part-3 Chapter 5**	Multi Purpose Room Electrical Requirements; • Provide combination data/phone outlets. • Each outlet shall have one 8 pin RJ data jack and one 8 pin RJ 45 phone jack. • Provide total of four combination outlets, one per perimeter wall.		✔	
25		**Part-3 Chapter 5**	Multi Purpose Room Television Requirements; • Provide a total of two CATV outlets located on opposing walls.		✔	
26		**Part-3 Chapter 5**	Size elevator cab to accommodate furniture, equipment, and emergency stretchers		✔	
27		**Part-3 Chapter 5**	Eliminate oil-fired energy sources for the mechanical system	✔		
28		**Part-3 Chapter 5**	Provide 4 pipe HVAC system with complete cooling system (including the chiller concrete pad) - minus the chiller at Camp Pendleton	✔		

ITEM NUMBER	CHECK OFF	REQUIREMENT LOCATION	USMC BQ CRITICAL CHECKLIST	DIRECTED REQUIREMENT MCHQ DIRECTION	FIXED REQUIREMENT MCHQ/ NAVFAC DECISION	REQUIREMENT SUPPORTING MCHQ CONCERN
29		**Part-3 Chapter 5 Part-4 D30**	Utilize specified HVAC System at North Carolina and Camp Pendleton		✔	
30		**Part-3 Chapter 5 Part-4 E20**	Contractor to provide FF&E design and procurement for Design-Build Projects		✔	
31		**Part-3 Chapter 5 Part-4 E20**	NAVFAC is avoiding an "Institutional" furniture appearance by developing Navy/ MC BEQ furniture standards (still under development). Marine Corps HQ as well as Base Level requirements are being integrated in Furniture Standards. If project utilizes Navy/ MC BEQ furniture standards, confirm requirements are met by consulting NAVFAC Component Interior Design and/ Marine Corps POC.		✔	
32		**Part-3 Chapter 5**	Duty Deck Manager must have visual surveillance of the front entrance door and supervise circulation in Lobby Area while sitting at the Reception Counter. Locate Duty Office to provide supervisory control of Laundry / Multi Purpose Rm.			✔
33		**Part 3- Chapter 6 C30**	Involve NAVFAC Component Interior Designer (MCI East involve Peggy Noland - MidAlantic ID) and Marine Corps POC (MCI East involve Nina McBroom – BQ Camp LeJeune) during interior finish/ color determinations. MCI East has developed three preapproved color schemes, of which one must be used. Avoid an "Institutional" appearance.			✔
			RFP REQUIREMENTS - PART 4			
1		**Part-4 G20**	Provide paved exterior activity space and furnishings such as cookout grills, benches, tables**.**	✔		
			UFC 4-721-10 REQUIREMENTS			
1		**WAIVERS**	All waivers must be approved by the Assistant Secretary of the Navy (Installations and Environment) via the Commandant.	✔		
2		**DESIGN LIMITATIONS**	All plan features must be included as a mandatory minimum: • The Net Living/Sleeping Areas must be met or exceeded. • The gross area maximums must not be exceeded. Plan room dimensions are NOT fixed, but must remain functional. • Bedrooms must be sized to accommodate two twin beds.		✔	
3		**GROSS BUILDING AREA**	**Gross Building Area = Apartment, Room or Module + Common Area (Space)**. The maximum allowed per plan is Gross Building Area of 506 ft^2 (47m^2).	✔		
4		**SITE DESIGN**	The requirements of the UFC 4-010-01, *DoD Minimum Antiterrorism Standards For Buildings*, take precedence over all other requirements.		✔	

ITEM NUMBER	CHECK OFF	REQUIREMENT LOCATION	USMC BQ CRITICAL CHECKLIST	DIRECTED REQUIREMENT MCHQ DIRECTION	FIXED REQUIREMENT MCHQ/ NAVFAC DECISION	REQUIREMENT SUPPORTING MCHQ CONCERN
5		**WALKWAYS AND SIDEWALKS**	Construct walkways to building entrances to be 8 feet (2.5 meters) wide. Construct sidewalks used for troop formations to be as much as 28 feet (8.5 meters) wide. Construct typical pedestrian sidewalks 6 feet (2 meters) wide.		✔	
6		**STRUCTURE**	Structural requirements are governed by UFC 1-200-01, *General Building Requirements.* Additional guidance is contained in the following documents: • All earthquake design must be in accordance with UFC 3-310-04, *Seismic Design for Buildings*. • Select the foundation system in accordance with UFC 3-220-01N, *Geotechnical Engineering Procedures for Foundation Design of Buildings and Structures*. • Select the structural system in accordance with *UFC 3-300-10N Structural Engineering.*		✔	
7		**PARKING**	Provide accessible parking to persons with disabilities and place within the main parking area with access to the main entrance. Provide barrier-free parking spaces for residents, visitors, and staff. Maintenance parking for service functions does not require dedicated space. Use the expected frequency of maintenance vehicles to determine whether dedicated parking is needed. Locate service access and parking to avoid disturbing residents. Provide standard parking spaces for 70% of the resident capacity. Provide motorcycle parking for 5% of the resident capacity; provide dedicated space with concrete paving. Provide bicycle parking for 5% of the resident capacity; provide secure, weather protected, conveniently located facilities. Provide visitor parking for 2% of the resident capacity. Locate two standard parking spaces for guest check-in near the entrance. Provide parking for each staff member and locate staff parking at the outer areas of the parking area.		✔	
8		**SPRINKLER SYSTEM**	For new construction and rehabilitation projects, install sprinkler systems in accordance with NFPA 13 or NFPA 13R when permitted.		✔	
9		**FIRE ALARM SYSTEMS**	Install addressable building fire alarms systems that are compatible with the base system and check the connection to the base reporting system.		✔	

ITEM NUMBER	CHECK OFF	REQUIREMENT LOCATION	USMC BQ CRITICAL CHECKLIST	DIRECTED REQUIREMENT MCHQ DIRECTION	FIXED REQUIREMENT MCHQ/ NAVFAC DECISION	REQUIREMENT SUPPORTING MCHQ CONCERN
10		**SMOKE DETECTORS**	Install smoke detectors for all personnel housing facilities in accordance with UFC 3-600-01, Fire Protection Engineering for Facilities and NFPA 72, National Fire Alarm Code. Power smoke detectors from the building fire alarm system. Provide smoke detectors with sounder bases. Smoke detectors in sleeping rooms must cause the sounder base to activate for all smoke detectors in that suite and an alarm signal to activate at the FACP, but must not activate the building's evacuation alarm.		✔	
11		**CARBON MONOXIDE (CO) DETECTORS**	Install approved carbon monoxide detectors in all Navy and Marine Corps bachelor housing that contain carbon-based fuel burning systems. Power carbon monoxide detectors from the building electrical system and locate in the immediate vicinity of the bedrooms.		✔	
12		**ACOUSTICS**	Walls between living units and between living units and corridors, and exterior walls of living units - sound transmission class (STC) of minimum STC 52. Floor and ceiling assemblies - minimum STC 55 and have an impact isolation class of at least (IIC) 60.		✔	
13		**HARDWARE AND LOCKS**	Hardware and lock requirements vary by Plan. Marine Corps projects require padlocking slide bolt hardware for closets.	✔		
14		**BATHROOM LOCKS**	Install latch bolts on the **inside** of **every** bathroom door to ensure privacy.	✔		
15		**WINDOWS**	Specify commercial grade windows with heavy-duty insect screen for operating section. Solar glazing with low "E" glass is required in regions with plentiful sunlight. Install heavy-duty insect screens on operable windows.		✔	
16		**WALLS AND PARTITIONS**	Choose wall and partition assemblies that will provide at least a 50 decibel sound separation between Market Style Apartments, 1+1E Apartments, Rooms, or Modules and adjacent spaces on the outside. Place electrical outlet boxes, HVAC openings, and related equipment to maintain the sound separation of the wall assembly. Seal edges of wall assemblies to adjacent construction to avoid flanking sound paths. Consider ease of repair and refinishing when choosing wall finishes. Provide corner guards on walls in public areas.		✔	
17		**INTERIOR FINISHES**	See Table 3-2 for Marine Corps outline interior finish requirements. Note the Marine Corps requires CMU interior walls and masonry exterior construction and finish. HQMC Facilities and Services Division, (Code LF) must approve any deviation.	✔		

ITEM NUMBER	CHECK OFF	REQUIREMENT LOCATION	USMC BQ CRITICAL CHECKLIST	DIRECTED REQUIREMENT MCHQ DIRECTION	FIXED REQUIREMENT MCHQ/ NAVFAC DECISION	REQUIREMENT SUPPORTING MCHQ CONCERN
18		**CEILINGS**	Paint ceilings off-white.	✔		
19		**PAINT**	Paint interior surfaces, except factory pre-finished materials, a minimum of one prime coat and two finish coats or as required by RFP.		✔	
20		**RESILIENT FLOORING**	As a minimum, provide composition 2; Class 2 (through pattern) VCT; or Sheet vinyl Type 1, Grade 1 or Type II, Grade 2 minimum with Class A (fibrous) backing. Avoid "no wax" surfaces, and white as a predominant color.		✔	
21		**CERAMIC TILE**	Use slip resistant ceramic or porcelain floor tiles in baths and toilets.		✔	
22		**CARPET**	Carpet tiles are acceptable for common areas and for administration areas (spaces). Performance standards for carpet in Bachelor Housing will be according to UFGS 09 68 00, *Carpet*, and additionally as follows: • Commercial Grade • Loop Pile construction • Attached Water-resistant backing • Impervious to harsh chemicals, using solution-died nylon; • Low absorption rate • Low static buildup • Permanent fade/10 year colorfast warranty		✔	
23		**EPA DESIGNATED PRODUCTS**	Certain types of products are listed by the Environmental Protection Agency as a Designated Product because they contain, or are manufactured using environmentally desirable products. Federal agencies are required to give first preference to EPA Designated Products. DOD policy requires all purchases of EPA designated products to comply with affirmative procurement requirements. SECNAV policy makes affirmative procurement mandatory for all Navy purchases of EPA designated products. Design specifications are required by the FAR to specify the use of EPA designated products containing the maximum practicable amount of recovered materials.		✔	
24		**CABINETS, MILLWORK AND HARDWARE**	Construct built-in cabinets to American Woodworking Institute Custom grade with heavy-duty hardware - composed of hardwood, steel, or rotationally-molded commercial-grade polyethylene construction. No particleboard is allowed in any millwork construction.		✔	

ITEM NUMBER	CHECK OFF	REQUIREMENT LOCATION	USMC BQ CRITICAL CHECKLIST	DIRECTED REQUIREMENT MCHQ DIRECTION	FIXED REQUIREMENT MCHQ/ NAVFAC DECISION	REQUIREMENT SUPPORTING MCHQ CONCERN
25		**CLOSET ACCESSORIES**	Use heavy-duty materials median braced for heavy loads. Review the closet design requirements and electrical requirements elsewhere in this document. Provide living and bedroom closets with vinyl clad metal shelves and hanging systems. Refer to paragraph 3-8 for closet design.		✔	
26		**TOILET ACCESSORIES**	Provide commercial grade toilet accessories as surface mounted or recessed, of non-corrodible metal or tile. Provide toilet paper holder, soap dish, combination tumbler and toothbrush holder, bathrobe hooks, and towel bars. Provide a shower curtain rod. Specify rod at proper height for conventional shower curtains (72 inches by 72 inches (approx.) (1.8 m by 1.8 m)).		✔	
27		**BATHROOMS**	Bathrooms are to be of residential design, quality, and finish.	✔		
28		**HEATING, VENTILATION, AND AIR CONDITIONING**	Apply smart building concepts using local loop technology. Avoid central controllers and monitors. Review security requirements for the project. Heating, Ventilating, And Air Conditioning (HVAC). Provide an HVAC system to give residents individual choice of heating and cooling year round within each living area in accordance with UFC 3-400-10N, *Mechanical*. HVAC systems must meet Energy Star/ FEMP standards of efficiency. Air Conditioning is mandatory in all Navy and Marine Corps Bachelor Housing. HVAC Controls. Locate individual HVAC control units within each living/sleeping area to minimize utility runs to the units. Provide heating or cooling in any season without regard for operation of adjacent Rooms. Provide an individual climate control within each Room.		✔	
29		**PUBLIC TOILETS**	By Federal Statute, all Public toilet rooms must be accessible to disabled persons.		✔	
30		**ELEVATORS**	Elevators are required for all Marines buildings three stories or higher.		✔	
31		**RISK ANALYSIS AND VULNERABILITY ASSESSMENT**	Review the risk analysis and vulnerability assessment (RAVA) to understand the established design basis threat for the facility.		✔	

ITEM NUMBER	CHECK OFF	REQUIREMENT LOCATION	USMC BQ CRITICAL CHECKLIST	DIRECTED REQUIREMENT MCHQ DIRECTION	FIXED REQUIREMENT MCHQ/NAVFAC DECISION	REQUIREMENT SUPPORTING MCHQ CONCERN
32		**PLUMBING**	Provide hot and cold water to public toilets, en-suite bathrooms, compact kitchens, janitor closets, and laundry rooms. Provide shutoff valves at all fixtures. Provide low water volume water closets in public toilet rooms. Use elongated or round, one-piece construction with a closed-front seat and a lid. Recommend areas with low water pressure use power-flush type water closets. Provide matching water closets and bath fixtures in neutral color. Provide hose bibs on exterior walls of each building at 30 meter (100 foot) intervals; frost-free as dictated by climatic conditions. Provide floor drains in janitor closets and laundry rooms. Provide ice machine hook-ups in facility easily accessible to patrons. Provide a drinking fountain with cooler for interior public areas, and appropriate exterior areas at 1 per 100 occupants. Hot Water System type is optional, but must meet FEMP recommendations. Use Building wide system, 1-4 rooms/modules per WH closet unit in module mechanical areas, or instantaneous water heaters in each unit. Natural Gas is prohibited in individual living/sleeping areas. Provide one Service Sink in service or housekeeping closets at each floor. Use the following fixtures as standards: Washerless faucets at lavatories. Single lever faucets at tub showers or shower stalls. Flow restrictive type showerheads at showers. Shower units are to use terrazzo base with full height solid surface material or ceramic surround. Acid-resisting cast iron bathtubs with metal stopper. Arrange as tub and shower with full height surround.		✔	✔ Terrazzo base solid surface

ITEM NUMBER	CHECK OFF	REQUIREMENT LOCATION	USMC BQ CRITICAL CHECKLIST	DIRECTED REQUIREMENT MCHQ DIRECTION	FIXED REQUIREMENT MCHQ/ NAVFAC DECISION	REQUIREMENT SUPPORTING MCHQ CONCERN
33		**ELECTRICAL**	Check Distribution equipment Check Wiring. Check receptacles and grounding Check Interior and exterior lighting for the building, Check Exterior site and parking area lighting, Check Emergency lighting, Check Telephone wiring, Check Fire detection and annunciation per the fire protection sections of this UFC. Check Cable television wiring, Check LAN Local Area Network system wiring for Computer hookup for each occupant. Check Intrusion detection systems at the exterior doors. Check Provide metering for electric power. Check Ceiling fans which are optional for Marine Corps Projects. Provide fans that are Energy Star compliant with pin-based CFL. Do not use combination fan-light fixtures and ensure that no strobe light effect is created by the fan/ light positioning. Check concealed wiring. Exposed surface metal raceways or conduits are not allowed.		✔	
34		**GFCI**	All receptacles must be grounding type. Provide ground-fault circuit-interrupt (GFCI) protection for all 120-volt AC receptacles installed in wet areas, including kitchens, toilet and exterior receptacles. In laundry rooms GFCI will only be provided for general use 120-volt receptacles, but not for the fixed installation equipment.		✔	
35		**LIGHTING**	Provide fluorescent lighting that meets a minimum LER of 65 Energy Star Rating in each Room.		✔	

ITEM NUMBER	CHECK OFF	REQUIREMENT LOCATION	USMC BQ CRITICAL CHECKLIST	DIRECTED REQUIREMENT MCHQ DIRECTION	FIXED REQUIREMENT MCHQ/ NAVFAC DECISION	REQUIREMENT SUPPORTING MCHQ CONCERN
36		**PERSONAL CLOSETS**	Provide at least one closet for each resident. Closets must be accessible to each living/sleeping area. Provide each closet with closet organizers with storage extending to the ceiling. Provide additional storage in service areas as appropriate. Provide full-height closets, using the space above normal door height for bulk storage. Provide continuous ventilation in closets to resist mold and mildew growth. Provide integral full-length hanging rods for coats and shelves. Marines require padlocking slide bolt hardware for personal closets. Bi-fold and sliding doors are not acceptable **Any deviations must be approved by HQMC Facilities and Services Division, (Code LF).**		✔	
37		**LAN**	Provide building space as required for Local Area Network hubs, routers, and rack mounted equipment supporting administrative operations, training, and support operations associated with Bachelor Housing management and mission assignment of the occupants. Media may share a common raceway system with telephone and other communications systems. Refer to EIA/TIA 570-A, 758, 569-A, 568-A-5, 568-B.2 and 568-B.3 for additional criteria. Provide a permanent installed conduit/raceway system to support LAN operations.		✔	
38		**CABLE TELEVISION**	In each building, provide a permanently installed conduit raceway system for cable television system media. Exposed surface mounted wiring is not permitted. Provide fire resistant media listed and marked suitable for the application. Installations must comply with Articles 820, or 830 of the *National Electrical Code*.		✔	
39		**ACCESSIBILITY REQUIREMENTS**	Incorporate a minimum of **two accessible rooms** on the ground floor of all new construction for Marines (PP) Bachelor Quarters. Public areas within Bachelor Quarters that are open to base personnel (civilian and military), visitors, etc., including reception area, corridors, elevators and public toilet facilities, MUST be barrier free. Living/sleeping room(s) within permanent party personnel quarters are intended for the housing of able-bodied personnel and therefore do not require accessibility provisions within current ADA and ABA guidelines.		✔	

ITEM NUMBER	CHECK OFF	REQUIREMENT LOCATION	USMC BQ CRITICAL CHECKLIST	DIRECTED REQUIREMENT MCHQ DIRECTION	FIXED REQUIREMENT MCHQ/ NAVFAC DECISION	REQUIREMENT SUPPORTING MCHQ CONCERN
40		**TELEPHONES**	Provide a structured voice telecommunications cabling system including fiber optic or Category 5e copper cabling from the base telecommunications system to the room wall outlet. Provide dedicated telecommunications equipment rooms, backbone, horizontal, and campus media and raceway systems as required by the following industry standards: EIA TIA/EIA-570-A, *Residential Telecommunications Cabling Standard*; EIA TIA-758, *Customer-Owned Outside Cable Plant Telecommunications Cabling Standard*; EIA TIA/EIA-569-A, *Commercial Building Standard for Telecommunications Pathways and Spaces*; EIA TIA/EIA-568-A-5, *Transmission Performance Specifications for 4-Pair 100 Ohm Category 5e Cabling Addendum No. 5 to TIA/EIA-568-A*; EIA TIA/EIA-568-B.2, *Commercial Building Telecommunications Standard Part 2: Balanced Twisted-Pair Cabling Components Revision of TIA/EIA-568-A*; and EIA TIA/EIA-568-B.3, *Optical Fiber Cabling Components Standard*. Provide government owned outside plant media and raceway in accordance with EIA/TIA 758.		✔	
41		**MARINE CORPS 2+0 ROOM**	All plan features must be included as a mandatory minimum. Building Gross Area must not be exceeded. Room Plan dimensions are NOT fixed, but must remain functional. Bedrooms must be sized to accommodate two (2) twin beds. Room Plans are accessed from an interior corridor in North Carolina, or an exterior open breezeway at Camp Pendleton.	✔	✔	
42		**MARINE CORPS INTERIOR ACCESS 2+0 ROOM**	Gross Building Area: The Total Allowable Gross Building Area may not exceed 506 ft^2 Gross (47 m^2) Gross Room Area: 388 ft^2 (36 m^2). Net Living/Sleeping Area: 180 ft^2 (16.7 m^2) is the required MINIMUM size per bedroom	✔		

ITEM NUMBER	CHECK OFF	REQUIREMENT LOCATION	USMC BQ CRITICAL CHECKLIST	DIRECTED REQUIREMENT MCHQ DIRECTION	FIXED REQUIREMENT MCHQ/ NAVFAC DECISION	REQUIREMENT SUPPORTING MCHQ CONCERN
43		**LIVING/SLEEPING AREA**	180 ft^2 (16.7 m^2) Net Area required.	✔		
44		**HEADS**	Heads and fixtures are to be commercial quality, and finish. Provide a vanity with lavatory and valance lighting with double medicine cabinets, a full sized shower, and water closet with shelving and towel/toiletry hardware for two (2) residents.	✔		
45		**PERSONAL CLOSETS**	22 ft^2 (2 m^2) Net Area required. Provide at least one (1) closet for each resident. Closets must be accessible to each living/sleeping area. Provide each closet with closet organizers with storage capability extending to the ceiling. Provide additional storage in service areas as appropriate. Provide closets full height, using the space above the normal door height for bulk storage. Provide continuous ventilation in closets to resist mold and mildew growth. Provide integral full-length hanging rods for coats and shelves. A light with motion-activated switch is required. Carefully placed lighting outside 2 ft (0.6 m) deep closets is acceptable. Each closet must be provided with a solid core wood door. Secure closets with standard hinged doors with non-removable pin hinges and locking hardware. Provide padlocking slide bolt hardware for personal closets. Bi-fold and sliding doors are not acceptable. **Any deviations must be approved by HQMC Facilities and Services Division, (Code LF).**	✔		
46		**INTERIOR WALLS AND FINISHES**	The Marine Corps requires a cement finish for interior walls and cement finish for exterior finish. Any deviations must be approved by HQMC Facilities and Services Division, (Code LF). Refer to Table 3-2 in this UFC for the Marine Corps for specific interior finish schedules.	✔		
47		**IN-ROOM TELEPHONE SERVICES**	Provide In-Room Telephone services for each resident per the assigned Plan design. Provide one dedicated line to two separate outlets on opposite walls. Locate one outlet on each party wall of the bedroom for flexibility and easy furniture access. Do not provide additional telephone lines or outlets when a room is intended for temporary use of 2 occupants.	✔		
48		**IN-ROOM SERVICES**	Provide In-Room access to Services to EACH resident in all plans except Open Bay Berthing. Provide each occupant with two LAN outlets per room for voice and data system connections. For example: a 2+0 room is designed to house 2 occupants, therefore 4 outlets are required. Locate LAN outlets on each party wall of the bedroom for flexibility and easy furniture access. Do not provide services to open bay berthing spaces.	✔		

ITEM NUMBER	CHECK OFF	REQUIREMENT LOCATION	USMC BQ CRITICAL CHECKLIST	DIRECTED REQUIREMENT MCHQ DIRECTION	FIXED REQUIREMENT MCHQ/ NAVFAC DECISION	REQUIREMENT SUPPORTING MCHQ CONCERN
49		**SERVICE AREA**	This term refers to the corridor/service space within the 2+0 Room Plan that is not incorporated into the Net Living/Sleeping Area.	✔		
50		**ENTRY VESTIBULE**	50 ft^2 (4.5 m^2) Net Area. Provide automatic entry doors and weather vestibule.	✔		
51		**DUTY OFFICE (AND HEAD)**	125 ft^2 (12 m^2) Net Area.	✔		
52		**DUTY BUNK**	80 ft^2 (7.5 m^2) Net Area.	✔		
53		**PUBLIC HEAD**	45 ft^2 (4.5 m^2) Net Area.	✔		
54		**ELEVATOR**	85 ft^2 (8 m^2) Net Area. (Elevator machine room area is excluded.)	✔		
55		**VENDING**	85 ft^2 (8 m^2) Net Area.	✔		
56		**MULTI-PURPOSE ROOM/SPACES**	720 ft^2 (70 m^2) Net Area.	✔		
57		**LAUNDRY ROOM**	One (1) washer and two (2) dryers for every sixteen (16) residents, as a minimum	✔		
58		**JANITOR CLOSET(S)**	90 ft^2 (8.5 m^2) Net Area. Provide a minimum 5 ft x 3 ft (1.5 m x 0.9 m) closet for permanent party facilities at each floor.	✔		
59		**MECHANICAL AND ELECTRICAL ROOM(S)**	5% of the Gross Building Area, (7% maximum).	✔		
60		**OPTIONAL COMMON BUILDING SPACES**	Admin/Office Space, Game Rooms, Resident Bulk Storage, Mail Room.	✔		
61		**EQUIPMENT WASHDOWN AREA**	Equipment washdown areas shall be located adjacent to a building entry point. The area shall be concrete, 8 ft (2.44 m) in diameter with a centrally supported standpipe consisting of six (6) shower heads with cut-off valves suitable for simultaneous operation of all six (6) shower heads. Provide a properly sized supply standpipe with a freeze-proof design and easily accessible shut-off valve(s). Concrete area will be sloped to a central drain. All equipment will be suitable for outside service	✔		

ITEM NUMBER	CHECK OFF	REQUIREMENT LOCATION	USMC BQ CRITICAL CHECKLIST	DIRECTED REQUIREMENT MCHQ DIRECTION	FIXED REQUIREMENT MCHQ/ NAVFAC DECISION	REQUIREMENT SUPPORTING MCHQ CONCERN
62		**EQUIPMENT DRYING AREAS**	Provide an enclosed equipment drying area on concrete hardstand adjacent to the equipment washdown area. Each drying area shall be totally enclosed on all four (4) sides and across the top with chain link fence fabric. Fence fabric shall be adequately supported by fence posts and support members to withstand a hanging equipment load of up to 150 lb/ft^2 (732 kg/m^2) from the top of the structure. The drying area shall be divided into three (3) separate sections with one (1) pedestrian gate per section. Each gate shall have a lockable hasp. Each of the three (3) sections shall be 90 in x 252 in x118 in (2300 mm X 6400 mm X 3000 mm) high. The concrete hardstand will be adequately sloped to prevent ponding water.	✔		
63		**RENOVATION LIMITATIONS AND REQUIREMENTS**	All features must be provided as a minimum, e.g., 1 medicine cabinet per occupant. Do not renovate for the sole purpose of meeting new construction criteria standards if the housing currently meets assignment size. Adjust designs to work within reasonable architectural practice. The minimum living/sleeping area (for the chosen Apartment, Room, or Module Plan) is required and must be provided as a clear area. This takes precedence over existing structural features. A shower may be provided in place of a tub/shower in Navy Bachelor Housing. Marine Corps Bachelor Housing will have showers. Freestanding columns are allowed, provided they do NOT interfere with a functional area.	✔		
64		**SUSTAINABILITY**	Design and construct the facility to comply with UFC 4-030-01, *Sustainable Development.*		✔	
65		**LIFE SAFETY**	Provisions for life safety will conform to National Fire Protection Association, NFPA 101. Navy and Marine Corps Bachelor Housing are classified by UFC 3-600-01, *Fire Protection Engineering for Facilities*, as Personnel Housing.		✔	

TEM NUMBER	CHECK OFF	REQUIREMENT LOCATION	USMC BQ CRITICAL CHECKLIST	DIRECTED REQUIREMENT MCHQ DIRECTION	FIXED REQUIREMENT MCHQ/ NAVFAC DECISION	REQUIREMENT SUPPORTING MCHQ CONCERN Q
66		**COMMISSIONING**	All projects, which include new building systems or equipment, require LEED Fundamental Commissioning as a minimum. Provide Commissioning to meet the requirements of the latest version of *USGBC LEED Rating System*. At a minimum, commission the following systems: HVAC systems and controls, lighting controls, and if provided, day lighting controls, refrigeration systems and controls, renewable energy systems, and domestic hot water systems. The designated Commissioning Authority shall meet the requirements of the latest version of *USGBC LEED Rating System*, and shall report results, recommendations, and findings directly to the Government.		✔	

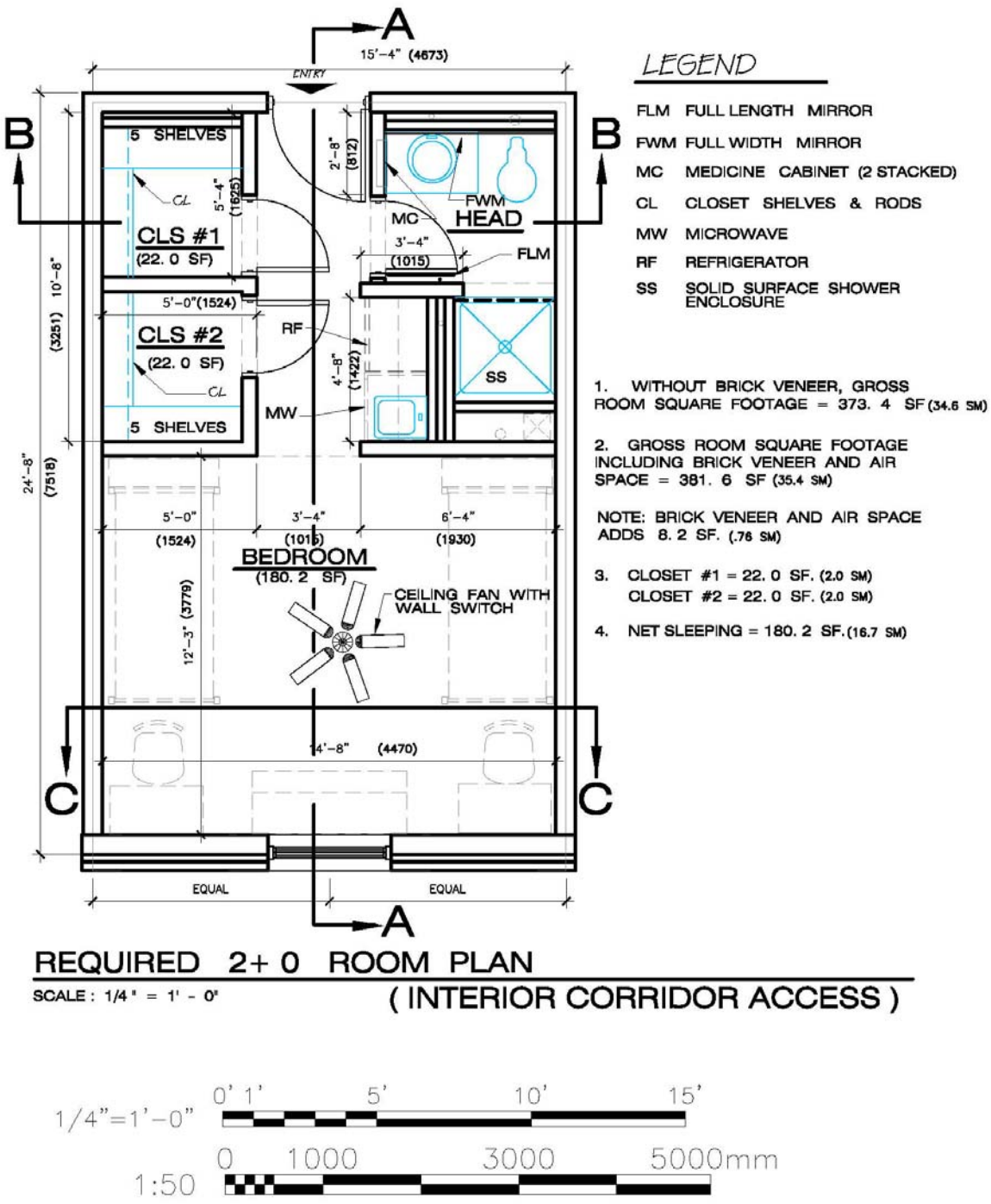

Figure B-5 The Marine Corps 2+0 Room (Interior Access)

Reference UFC 4-721-10

REVIEW AND CERTIFICATION
FOR
DOD MINIMUM ANTITERRORISM STANDARDS FOR BUILDINGS
CHECKLIST

*Instructions: The information outlined in this document shall be used to provide the **minimum** requirement for development of DOD Minimum Antiterrorism Standards for Buildings submittals for all building projects. Additional and supplemental information may be used to further develop the review. Insert N/A after criteria, which may be "not applicable". Provide this checklist with certification signatures in the project Design Analysis at each submittal.*

Applicable Standards: UFC 4-010-01

Chapter 1-2

Project Name: (Fill In Project Name)

Applicability: The DoD Minimum Antiterrorism Standards for Buildings apply to this project.

A. New Construction **This project consists of new construction.**

- Primary Gathering _____
- Billeting _____
- Inhabited _____
- Low Occupancy _____
- Expeditionary _____
- Temporary _____

B. Existing Building _____

Cost exceeds 50% of Replacement Cost _____
Cost less than 50% of Replacement Cost _____

- Primary Gathering _____
- Billeting _____
- Inhabited _____
- Low Occupancy _____
- Expeditionary _____
- Temporary _____

C. Building Addition _____

50% or more of the Gross Area _____
Less than 50% of the Gross Area _____

D. Leased Building _____

E. Expeditionary & Temporary Structures _____

- Has Appendix D requirements been incorporated? _____

F. National Guard Building _____

G. Tenant Bldgs. on DOD Installations _____

H. Exempt _____

Site Planning:

1. Standard 1 – Standoff Distance
   Appendix B-1.1 & Table B-1

   - Controlled Perimeter or Parking and Roadways w/o Controlled Perimeter
     - Primary Gathering – 148 Feet _____
     - Billeting – 148 Feet _____
     - Inhabited – 82 Feet _____
   - Parking and Roadways within a Controlled Perimeter
     - Primary Gathering – 82 Feet _____
     - Billeting – 82 Feet _____
     - Inhabited – 33 Feet _____
   - Trash Containers
     - Primary Gathering – 82 Feet _____
     - Billeting – 82 Feet _____
     - Inhabited – 33 Feet _____
   - Parking of Emergency, Command, and Operations Support Vehicles
     - Is parking of vehicles required? _____
     - Have the conditions for parking vehicles been met?
   - Parking of Vehicles Undergoing Maintenance
     - Is parking of vehicles required? _____
     - Have the conditions for parking vehicles been met? _____
   - New Parking and Roadway projects
     - Does new parking and road location meet minimum standoff distance requirements from existing buildings? _____

2. Standard 2 – Unobstructed Space
   Appendix B-1.2

   - Are there any obstructions within 33 Feet of the building that is 6 inches or greater in height? _____

- Are packages within the 33 foot distance observable by building occupants? _____

- Is Electrical and Mechanical Equipment 33 Feet or greater from the building? _____

- Equipment Enclosures:
  - Are walls or screening devices more than two sides? _____

  - If "yes" has a four sided enclosure w/ a top been provided? _____

3. Standard 3 – Drive-Up/Drop-Off Areas
   Appendix B-1.3

   - Are drive-up or drop-off areas, or drive-through lanes near building required? _____
     - If "yes" are the areas or lanes clearly defined and marked to to prevent parking in those areas? _____
     - Are drive-up or drop-off areas, or drive-through lanes not located under inhabited portion of bldg? _____

4. Standard 4 – Access Roads
   Appendix B-1.4

   - Have access control measures been provided on access roads required for the operation of the building? _____

5. Standard 5 – Parking Beneath Buildings or on Rooftops
   Appendix B-1.5 & UFC 4-023-03

   - Is parking beneath the building or on roof top required? _____
     - If "yes" has access control Measures been provided? _____
     - Are floors beneath or roofs above inhabited areas designed to prevent progressive collapse? _____

6. Appendix C – Recommended Additional Measures
   Appendix C-1.1 thru C-1.10

   - Has recommendations 1 thru 10 been considered?
     - 1 – Vehicle Access Points? _____
     - 2 – High-speed Vehicle Approaches? _____
     - 3 – Vantage Points? _____
     - 4 – Drive-up / Drop Off? _____

- 5 – Building Location? _____
- 6 – Railroad Location? _____
- 7 – Access Control for Family Housing? _____
- 8 – Standoff for Family Housing? _____
- 9 – Minimize Secondary Debris? _____
- 10 – Building Separation? _____

Structural:

7. Standard 6 – Progressive Collapse Avoidance
   Appendix B-2.1 & UFC 4-023-03

   - Is building 3 or more stories? _____
     (NOTE: Basements are considered a story if one or more walls are exposed.)

   - If "yes" are walls, columns, and floors in accordance with UFC 4-023-03, Design of Buildings to Resist Progressive Collapse? _____

8. Standard 7 – Structural Isolation
   Appendix B-2.2

   - Is new building addition structural system independent from the adjacent adjacent existing building? _____

   - Is inhabited portion of new building structurally independent from the uninhabited portion of the building? _____

9. Standard 8 – Building Overhangs
   Appendix B-2.3

   - Does building have overhangs with inhabited spaces above them? _____
     - If "yes" insure that there are no roadways or parking areas under the overhangs.
     - If "yes" insure that floors beneath inhabited areas are in accordance with UFC 4-023-03, Design of Buildings to Resist Progressive Collapse.
     - If "yes" insure that superstructure is in accordance with UFC 4-023-03, Design of Buildings to Resist Progressive Collapse.

10. Standard 9 – Exterior Masonry Walls
    Appendix B-2.4

    - Is masonry wall in new building reinforced

with required minimum enforcement? _____

- Has mitigating measures been provided for masonry wall in existing building that provides an equivalent level of protection? _____

11. Appendix C – Recommended Additional Measures
Appendix C-2.1

- Has recommendation 11 been considered?
- 11 – Structural Redundanct? _____

12. Other Structural Requirements

- Has structural requirements related to windows been considered? (See Architectural Standard 10)
  - Yes _____
  - No _____

Architectural:

13. Standard 10 – Windows and Skylights
Appendix B-3.1 & UFC 4-011-02

- Has required thickness of exterior glazing be determined using Tables B-2 & B-3? _____

- Do window frames, anchorages, and supporting elements meet required minimum level of protection for the following? _____
  - Frame Member Design
  - Glazing Frame Bite
  - Frame Connection to Wall
  - Supporting Structural Elements

14. Standard 11 – Building Entrance Layout
Appendix B-3.2

- Does building main entrance face away from the installation perimeter or other uncontrolled vantage point? _____
  - If “no” provide means to screen Lines of site.

15. Standard 12 – Exterior Doors
Appendix B-3.3

- Do all exterior doors from inhabited areas open outwards? _____

- Does glazing in doors meet Provisions of Standard 10 above? _____

16. Standard 13 – Mailrooms
Appendix B-3.4 & B-4.2

- Is mailroom located on the exterior perimeter of the building? _____
- Is mailroom located as far away from heavily populated areas as possible? _____
- Is mailroom sealed between its envelope and other portions of the building in which it is located? _____
    - Does mailroom have a hard ceiling or does mailroom walls extend full height and are sealed to underside of structure above? _____
    - Does mailroom door have weather stripping on all four edges? _____

17. Standard 14 – Roof Access
Appendix B-3.5

- Are external roof access points controlled? _____

18. Standard 15 – Overhead Mounted Architectural Features
Appendix B-3.6

- Are overhead mounted features weighing 31 lbs. or more mounted to minimize falling and injuring building occupants? _____
- Are these items mounted to resist forces of 0.5 times the component weight in any direction and 1.5 times the component weight in the downward direction? _____

19. Appendix C – Recommended Additional Measures
Appendix C-2.2 thru C-2.7

- Has recommendations 12 thru 17 been considered?
    - 12 – Internal Circulation? _____
    - 13 – Visitor Control? _____
    - 14 – Asset Location? _____
    - 15 – Room Layout? _____
    - 16 – External Hallways? _____
    - 17 – Windows? _____

Mechanical and Electrical:

20. Standard 16 – Air Intakes
Appendix B-4.1

- Are all air intakes a minimum of 10 feet above the ground? _____

21. Standard 17 – Mailroom Ventilation
Appendix B-4.2 & DOD Security Engineering Design Manual

- Does mailroom have separate dedicated air ventilation system? _____
- Is dedicated exhaust system to maintain slight negative air pressure provided? _____
- Has outside air intakes and exhausts With low leakage isolation dampers been provided? _____
- Has separate switches or methods of control to isolate mailroom been provided? _____

22. Standard 18 – Emergency Air Distribution Shutoff
Appendix B-4.3

- Has Emergency shutoff switch in HVAC control system been provided? _____
- Is switch(es) easily accessible to building occupants? _____

23. Standard 19 – Utility Distribution and Installation
Appendix B-4.4

- Are critical or fragile utilities routed so they are not located on exterior walls or on walls shared with mailrooms? _____
- If redundant utilities are required are they routed so they are not collocated or are not run in same chases? _____
- If emergency backup systems are required are they located away from the system components for which they provide backup? _____

24. Standard 20 – Equipment Bracing
Appendix B-4.5

- Are overhead mounted features weighing 31 lbs. or more located to minimize falling and injuring building occupants? _____

- Are these items mounted to resist forces of 0.5 times the component weight in any direction and 1.5 times the component weight in the downward direction? _____

25. Standard 21 – Under Building Access
Appendix B-4.6

- Are accesses to crawl spaces, utility tunnels, and other means of under building access controlled? _____

26. Standard 22 – Mass Notification
Appendix B-4.7 & UFC 4-021-01

- Has a mass notification system been provided in the new building? _____

  If required the design must comply with Standard 22. The MNS must integrate with existing Base MNS. Point of Contact: Provost Marshal Office, Physical Security Section, Mr. Zack parks at (910) 451-5810.

- Has a mass notification system been provided in existing primary gathering, billeting, and high occupancy family housing buildings? _____

  If required the design must comply with Standard 22. The MNS must integrate with existing Base MNS. Point of Contact: Provost Marshal Office, Physical Security Section, Mr. Zack parks at (910) 451-5810.

Certification of Force Protection Requirements
Preparers of this document certify the accuracy and completeness of the Antiterrorism Force Protection features for this project in accordance with the attached completed form(s).

This Review and Certification for DoD Minimum Antiterrorism Standards for Buildings Checklist was completed on the following date:

INTERIM or PRELIMINARY DESIGN

(Fill In Project Name)

Architect-Engineer
Certification of Antiterrorism Standards
(Note: Edit the team members if necessary)

Preparers of this document certify the accuracy and completeness of the Antiterrorism Force Protection features of this project.

Civil Engineer of Record:

_____

Signature Date

Architect of Record:

_____

Signature Date

Structural Engineer of Record:

_____

Signature Date

Mechanical Engineer of Record:

_____

Signature Date

Electrical Engineer of Record:

_____

Signature Date

CAMP LEJEUNE, NORTH CAROLINA

ANTITERRORISM STANDARDS REVIEW

for

(Fill in Project Name)

INTERIM or PRELIMINARY DESIGN

Review and Certification for Minimum Antiterrorism Standards for Buildings Checklist has been completed and is attached. The Antiterrorism Force Protection review, and related design analysis documentation have been checked and approved by the in-house design team.

Project Design Team Leader Signature _____ Date _____

Antiterrorism Force Protection Team:

Civil Team Member Signature _____ Date _____

Architectural Team Member Signature _____ Date _____

Structural Team Member Signature _____ Date _____

Mechanical Team Member Signature _____ Date _____

Electrical Team Member Signature _____ Date _____

CAMP LEJEUNE, NORTH CAROLINA

ANTITERRORISM STANDARDS REVIEW

for

(Fill in Project Name)

FINAL DESIGN

The project specific **Review and Certification for Minimum Antiterrorism Standards for Buildings Checklist** has been completed and is attached. The construction contract plans, specifications, and related design analysis documentation have been checked and approved for accuracy and coordination.

Project Design Team Leader Signature Date

_____ _____

Camp Lejeune Antiterrorism Officer Signature: Date

_____ _____

SECTION 14 24 00

HYDRAULIC ELEVATORS
08/10

THE A / E MUST REVIEW & VERIFY THIS THIS SECTION FOR ACCURATACY & NOTE ANY MODIFICATIONS

PART 1 GENERAL

1.1 REFERENCES

The publications listed below form a part of this specification to the extent referenced. The publications are referred to within the text by the basic designation only.

AMERICAN WELDING SOCIETY (AWS)

AWS D1.1/D1.1M	(2010) Structural Welding Code - Steel

ASME INTERNATIONAL (ASME)

ASME A17.1/CSA B44	(2007; Addenda a 2008) Safety Code for Elevators and Escalators
ASME A17.2	(2007) Guide for Inspection of Elevators, Escalators, and Moving Walks
ASME B16.11	(2009) Forged Fittings, Socket-Welding and Threaded
ASME B16.9	(2007) Standard for Factory-Made Wrought Steel Buttwelding Fittings

ASTM INTERNATIONAL (ASTM)

ASTM A 106/A 106M	(2008) Standard Specification for Seamless Carbon Steel Pipe for High-Temperature Service
ASTM A 53/A 53M	(2007) Standard Specification for Pipe, Steel, Black and Hot-Dipped, Zinc-Coated, Welded and Seamless

INTERNATIONAL CODE COUNCIL (ICC)

ICC IBC	(2009; Errata First Printing) International Building Code

NATIONAL ELEVATOR INDUSTRY, INC. (NEII)

NEII-1	(2000; R thru 2010) Building Transportation Standards and Guidelines, including the Performance Standards Matrix for New Elevator Installation

NATIONAL FIRE PROTECTION ASSOCIATION (NFPA)

NFPA 252	(2008) Standard Methods of Fire Tests of Door Assemblies
NFPA 70	(2008; TIA 08-1) National Electrical Code

U.S. NATIONAL ARCHIVES AND RECORDS ADMINISTRATION (NARA)

29 CFR 1910.27	Fixed Ladders
36 CFR 1191	Americans with Disabilities Act (ADA) Accessibility Guidelines for Buildings and Facilities

1.2 SYSTEM DESCRIPTION

Provide a pre-engineered elevator system, by manufacturer regularly engaged in the manufacture of elevator systems, that complies with ASME A17.1/CSA B44 and ASME A17.2 in their entirety, and additional requirements specified herein.

1.2.1 Miscellaneous Requirements

Submit one set of wiring diagrams, in plastic or glass cover, framed and mounted in elevator machine room for revised building electrical system, if needed, to make supplied elevator system function as specified. Deliver other sets to Contracting Officer. Coded diagrams are not acceptable unless adequately identified. Submit calculations for the Reaction Loads imposed on the building by and Heat Loads generated by the elevator system.

1.2.2 Provisions for Earthquake Protection

The facility shall comply with all ASME A17.1/CSA B44, Part 8.4 requirements. Seismic Site Classification shall be determined in accordance with UFC 3-301-01, Structural Engineering, and the 2008 USGS Ground Acceleration Maps.

1.3 SUBMITTALS

Government approval is required for submittals with a "G" designation; submittals not having a "G" designation are for Contractor Quality Control approval. Submit the following in accordance with Section 01 33 00 SUBMITTAL PROCEDURES:

SD-02 Shop Drawings

Detail Drawings; G

SD-03 Product Data

Passenger Elevators; G
Freight Elevators; G

Information on motor, pump, gages, piston and cylinder, piping and valves, hall station, and buffer on elevators and accessories. For elevator supporting systems, include information on car control and emergency power systems. On data sheets, provide document identification number or bulletin number, published or

copyrighted prior to the date of contract bid opening.

Field Quality Control Plan; G
Logic Control; G

SD-05 Design Data

Reaction Loads; G

Calculations of reaction loads imposed on building by elevator system that comply with ASME A17.1/CSA B44. Calculations shall be certified by a Registered Professional Engineer. Do not fabricate materials nor perform construction until this information is approved by the Contracting Officer.

Heat Loads; G

Calculations for total anticipated heat loads generated by all the elevator machine room equipment. A Registered Professional Engineer shall provide certified calculations. Do not fabricate materials nor perform construction until this information is approved by the Contracting Officer.

SD-06 Test Reports

Field Tests Reports; G

SD-07 Certificates

Qualifications; G

A letter no later than 14 calendar days after the Notice to Proceed providing the name and Statement of Qualifications, including ASME A17.1/CSA B44 Certificate and all required state and local licenses of the individual who will perform the duties specified herein for the Elevator Inspector. A letter of endorsement from the elevator manufacturer certifying that the Elevator Specialist is acceptable to manufacturer no later than 14 calendar days after the Notice to Proceed providing the name and Statement of Qualifications of the individual who will perform the duties specified herein for the Elevator Specialist. Copies of certified welders' qualifications, demonstrating compliance with AWS D1.1/D1.1M, Section 4; list welders' names with corresponding code marks.

SD-10 Operation and Maintenance Data

Operation and Maintenance Manuals; G
Maintenance and Diagnostic Tools; G
Maintenance and Diagnostic Software
Maintenance and Repair Action Plan; G

Data package in accordance with Section 01 78 23 OPERATION AMD MAINTENANCE DATA. Three Operation and Maintenance Manuals, 28 days prior to the Operation and Maintenance Training. Include a list of phone numbers, personnel contacts, and all tools required for operation and maintenance.

Operation and Maintenance Training; G

Proposed Onsite Training schedule, submitted concurrently with the Operation and Maintenance Manuals.

1.4 QUALITY ASSURANCE

1.4.1 Elevator Specialist

Perform work specified in this section under the direct guidance of the Elevator Specialist who is regularly engaged in the installation and maintenance of the type and complexity of elevator system specified in the contract documents, and who served in a similar capacity for at least three systems that have performed in the manner intended for a period of not less than 24 months. Provide endorsement letter from the elevator manufacturer certifying that the Elevator Specialist is acceptable to manufacturer. The Elevator Specialist oversees the acceptance inspections and tests, signs and certifies the successful results. Provide the Elevator Specialist's written certification that the installation is in accordance with the contract requirements, after completion of the acceptance inspections and tests. Bring any discrepancy to the attention of the Contracting Officer in writing, no later than three working days after the discrepancy is discovered.

1.4.2 Elevator Inspector

a. The Elevator Inspector will be provided by the Government to inspect the installation of the elevator(s) to ensure that the installation conforms to all contract requirements. The Elevator Inspector will witness the acceptance inspections and tests, approve all results, and shall sign and certify the successful results. The Elevator Inspector, after completion of the acceptance inspections and tests, will provide written certification that the installation is accordance with the contract requirements.

1.4.3 Welders' Qualifications

Comply with AWS D1.1/D1.1M, Section 4 Qualification. Provide certified copies of welders' qualifications. List welders'names with corresponding code marks to identify each welder's work.

1.4.4 Detail Drawings

Submit detail drawings, including dimensioned layouts in plan and elevation showing the arrangement of elevator equipment, accessories, supporting systems, anchorage of equipment, clearances for maintenance and operation; and details on hoistway, doors and frames, operation and signal stations, controllers, motors, guide rails and brackets, cylinder and plunge unit, and points of interface with normal power fire alarm system, HVAC or exhaust systems and interface with emergency power systems. Provide drawings to show any revised building electrical system required to make supplied elevator system function as specified. Prepare drawings with complete wiring diagrams showing electrical connections and other details required to demonstrate sequence of operations and functions of system devices. Include the appropriate sizing of electrical protective devices on the drawings, which are frequently different from National Electrical Code standard sizes.

1.5 SCHEDULING

Every six months, test systems for Emergency Power Operation, and Firefighters' Service. Schedule to not interfere with building operations. For Firefighters' Service, test monthly in accordance with ASME A17.1/CSA B44, Section 8.6.10.1. Provide written results of each test operation to the Contracting Officer. Document all inspection and testing. Maintain copy of documentation in machine room.

1.6 WARRANTY

Provide routine warranty service in accord with manufacturer's warranty requirements, for a period of 12 months after the date of acceptance by Contracting Officer. Perform work during regular working hours]. During the warranty service period, include 24-hour emergency service, with 1 hour response time, without additional cost to the Government. Include adjustments, greasing, oiling, and cleaning. Provide routine inspection and tests of elevators in accordance with ASME A17.1/CSA B44 Section 8.11.3 and ASME A17.2. Provide supplies and parts to keep elevator system in operation. Perform service only by factory trained personnel. Maintain a maintenance log of all service orders performed during the warranty period and submit it to the Contracting Officer 21 days prior to the end of the warranty period.

1.7 MAINTENANCE AND REPAIR ACTION PLAN

Provide plan of action prepared by the Elevator Specialist for emergency and routine maintenance in accordance with paragraph titled WARRANTY. Provide a list of phone numbers, personnel contacts, and all maintenance and diagnostic tools provided by paragraph "Maintenance and Diagnostic Tools", to the Contracting Officer.

1.7.1 Maintenance and Diagnostic Tools

Provide all special tools and software necessary to service and maintain each elevator delivered at time of final acceptance. Provide one of each tool per group of elevators. Include solid state or microprocessor diagnostic tools unavailable on the open market. Provide necessary diagnostic software in cases where the solid state or microprocessor diagnostic tools are available on the open market

1.7.2 Keys for Elevator Key Switches

Provide a minimum of twelve keys per unique cylinder used on all key switches for single elevator. If there is more than one elevator, additional keys are not required unless there are additional unique cylinders. Provide keys with brass or fiberglass tags marked 'PROPERTY OF THE U.S. GOVERNMENT' on one side with function of key or approved code number on other side.

PART 2 PRODUCTS

2.1 PASSENGER ELEVATORS

2.1.1 Basic Requirements

a. Rated Load: 3,500 lbs.

b. Rated Speed: 150 fpm.

c. Travel Length: [_____] ft..

d. Number of Stops: [_____]

e. Number of Hoist Way Openings: Front; [_____] Rear

f. Car Inside Dimensions: [_____] ft.-in..wide, [_____] ft.-in. deep and [_____] ft.-in. high.

h. Car Door Types: Single-speed center opening Horizontal sliding.

2.1.2 Cab Enclosures and Door Finishes

Provide finishes as indicated.

a. Floor; vinyl composition tile.

b. Walls; stainless steel. Provide each cab wall with equally spaced and equally sized wall panels. Conceal all fasteners. Wall trim; stainless steel.

c. Interior face of doors; stainless steel.

d. Ceilings; eggcrate.

e. Hoistway Doors and Frame Finishes; provide finishes on exterior of hoistway as follows:

(1) Frame; stainless steel.
(2) Exterior face of door; stainless steel.

2.2 SPECIAL OPERATION AND CONTROL

Provide all special operations and control systems in accordance with ASME A17.1/CSA B44. Provide special operation key switches with 6 pin cylinder locks with removable cores an a key control lock for each operation system.

2.2.1 Firefighters' Service

Provide equipment and signaling devices. The designated level for Firefighters' key operated switch is the ground floor.

2.2.2 Smoke Detectors

Provide connections directly to elevator controls which will, when smoke is detected by any smoke detector, actuate Firefighters' Service and send each elevator to the correct floor as required by ASME A17.1/CSA B44. Provide dual-contact smoke detectors located in the elevator lobbies and the elevator machine room. Provide dual-contact smoke detector at top of hoistway. Include only these smoke detectors with the circuit for elevator controller actuation of Firefighters' Service. In lieu of dual-contact smoke detectors, use an addressable fire alarm system with listed smoke detectors in the above stated locations. Ensure that all smoke detectors are mounted on finished ceiling.

2.2.3 Fire Sprinklers

For each elevator, provide control wiring connecting the flow switch to the shunt trip equipped circuit breaker within the electrical panel serving the main line disconnect. Upon flow of water, equip flow switch to instantaneously send a signal to cause opening of shunt-trip equipped mainline circuit breaker, in compliance with ASME A17.1/CSA B44, Section 2.8.2, and send a signal to fire alarm control panel to indicate water flow condition. Provide machine room sprinkler flow switch actuation to shunt trip all elevator(s) served by the machine room. Provide hoistway sprinkler flow switch actuation to shunt trip all elevator(s) in the hoistway.

2.2.4 Top-of-Car Operating Device

Provide operating device mounted on or from car crosshead, to permit operation of car at 150 fpm maximum for adjustment, maintenance, testing, and repair. Include integral or remote safety device, continuous pressure "UP" and "DOWN" switches or buttons, emergency stop switch, and inspection switch.

2.2.5 Hoistway Access Switches

Provide key-operated hoistway access switch to permit limited movement of car at terminal floors for car positioning, operative only when "INSPECTION" switch in car operating panel is in the "INSPECTION" position. Locate switch 6 feet above floor level, within 12 inches of hoistway entrance frame or with only ferrule exposed when located in entrance frame.

2.2.6 Independent Service

Provide exposed key-operated switch in car operating panel to enable independent service and simultaneously disable in-car signals and landing-call responses. Provide indicator lights that automatically illuminate during independent service.

2.2.7 Elevator Operation

2.2.7.1 Selective Collective Automatic Operation

Provide Selective Collective Automatic Operation. Provide illuminating push buttons.

2.3 ELEVATOR DRIVE SYSTEM

Provide hydraulic elevator drive system, including pump unit, piping, cylinder/plunger assembly, and associated equipment, which will operate at a maximum working pressure of 500 psi or less. Provide complete elevator system that meets or exceeds the NEII-1.

2.3.1 Hydraulic Pump Unit

Provide self-contained pump unit, including oil-hydraulic elevator pump, electric motor, suction-line oil strainer, oil-tight drip pan, and structural steel outer base with tank supports and isolation pads. Provide oil tank capacity for full plunger displacement plus at least 10 gallons. Provide means to maintain oil temperature between 80 and 120 degrees F regardless of ambient temperature. Limit acoustic output in elevator machine room to 80 dbA.

2.3.1.1 Pump Motor

Provide intermittent-duty pump motor rated at 120 starts/hour. Provide motor that is sized so that the motor amperage does not exceed the motor data tag amperage in any operating condition, exclusive of acceleration and deceleration. Provide minimum of one megohm insulation resistance between conductors and motor frame. Provide motor and pump nameplate and data tags permanently mounted on the outside of the pump unit frame, with all data viewable without the use of mirrors or other tools.

2.3.2 Hydraulic Controls and Equipment

Provide control valve, overspeed (rupture) valve, blowout-proof muffler, and hydraulic pump discharge strainer in the hydraulic oil supply line. Provide 1/4 turn, manual shutoff ball-valves in the elevator machine room and in the hoistway pit. Provide scavenger pump in hoistway pit.

2.3.2.1 Hydraulic Control Valve

Provide constant-velocity, down-speed regulated, control valve. Down-speed regulated control valve allows the car to travel at the same speed in the down direction, regardless of the load on the elevator. In addition, the hydraulic control valve shall have built-in adjustment capability to operate the elevator at 140 percent of rated speed in the down direction to facilitate periodic testing of the overspeed safety valve.

2.3.2.2 Hydraulic Overspeed Safety Valve

Provide overspeed safety valve in hydraulic oil supply line, directly adjacent to the hydraulic cylinder. Provide threaded pipe connections between the hydraulic cylinder and the overspeed valve. Provide valve equipped with manufacturer's manual shutoff feature. Overspeed valve shall not be equipped with a manual lowering feature. Provide adjustable valve with means to seal adjustment after inspection and testing by certified elevator inspector.

2.3.2.3 Hydraulic Oil Scavenger Pump

Provide a scavenge oil reservoir with strainer and transfer pump. Provide a manual-reset pit flood switch to prevent pump operation if pit is flooded. Anchor pump and reservoir to pit floor.

2.3.3 Hydraulic Piping and Accessories

Provide ASTM A 53/A 53M or ASTM A 106/A 106M, Schedule 80, black steel piping with ASME B16.9 or ASME B16.11 fittings for supply piping. Extend schedule 80 piping from the pump control valve body, inside the pump unit, to the hydraulic cylinder in the hoistway. Provide welded or threaded forged pipe fittings for all fittings and components of the hydraulic oil supply line. For direct plunger cylinders, provide dielectric union or isolation couplings at each end of the hydraulic oil supply line. Provide hangers or supports for all piping and components.

2.3.3.1 Containment of Hydraulic Oil Supply Line

Protect all portions of hydraulic oil supply line that are installed below ground, including portions encapsulated in concrete or covered by construction, with continuous, Schedule 80, PVC. Inside diameter of PVC

shall be 3 inches larger than the outside diameter of the hydraulic oil supply line pipe and couplings.

2.3.4 Hydraulic Elevator Type

Provide a direct plunger type hydraulic elevator. Do not utilize telescopic or inverted cylinder-plunger units. Telescopic and inverted jacks are not acceptable. Do not utilize roped-hydraulic elevator design.

2.3.4.1 Cylinder-Plunger (Jack) Unit

Provide a single-stage plunger of seamless steel construction. Provide cylinder with self-stabilizing mount that will support and hold cylinder plumb without the need for stabilization means at the bottom of the cylinder. Provide a threaded, 1/4 inch bleeder valve at the top of the cylinder, just below packing gland.

2.3.5 Cylinder Well System

For direct plunger type hydraulic elevator, the cylinder well system consists of a sealed, dry well casing and a PVC liner.

2.3.5.1 Well Casing

Locate and drill well for the cylinder well system. Line well with steel casing, minimum 1/4 inch wall with welded 1/2 inch steel bottom. Set casing plumb. Provide a dry, sealed well casing.

2.3.5.2 PVC or HDPE Cylinder Liner

Provide Schedule 80 PVC or HDPE pipe liner with bottom cap and couplings; joints sealed watertight using pipe manufacturer's recommended adhesive or heat welding methods. Provide liner inside diameter not less than 3 inches larger than elevator cylinder maximum outside diameter. Liner shall extend above hoistway pit finish floor. Liner may be provided as a cylinder manufacture's applied liner or as a separate component. For separate liner, set liner plumb in well casing, located as necessary for cylinder installation. Provide dry, salt-free sand below and around liner to top of well casing.

2.3.5.3 Cylinder Installation

Remove all moisture from inside of cylinder liner. Install cylinder plumb, inside liner. Provide a 1/4 inch copper evacuation tube inside the PVC liner. The bottom of the evacuation tube, shall be within 6 inch of the bottom of the liner. Top of evacuation tube shall extend at least 6 inch above liner. Provide top of test tube with removable cap to exclude foreign matter. Provide separate air pressure fitting in liner to facilitate pressure test of liner as specified in paragraph PRESSURE TEST OF PVC LINER/CYLINDER ASSEMBLY. Secure Liner/Cylinder Assembly as recommended by cylinder manufacturer.

2.3.5.4 Pressure Test of PVC Liner/Cylinder Assembly

Perform 8 psig pressure test of liner/cylinder assembly. Perform the test of liner/cylinder assembly as a sealed unit. Provide safety relief valve, set to relieve at 10 psig. Provide 4.5 inch diameter dial pressure gage scaled for 0 to 50 psig and calibrated to 0.5 percent accuracy and an air pressure admission throttle and shutoff valve. For safety, pressure test

shall only be performed when liner and cylinder are fully inserted and assembled in the well casing. Perform the test from remote location outside of the elevator pit. Perform test in the presence of, and witnessed by, a NAVFAC Certified Elevator Inspector.

2.3.5.5 Cylinder Liner Water and Oil Sensor System

Provide moisture sensor system designed to detect water and/or oil in the bottom of the cylinder liner. Water and oil sensors shall be located inside the cylinder liner and within 6 inches of the bottom of the liner. Water and oil senor system shall include a control and alarm panel, located in the elevator machine room. System shall provide automatic actuation of audible and visual alarms upon detection of either water or oil inside the cylinder liner.

2.3.5.6 Seal Top of Well Casing

Upon successful test and certification of PVC Liner/Cylinder assembly, seal gap between steel well casing and PVC liner with foam insert strong enough to retain and support final grouting. Provide 3000 psi grout to a minimum of 4 inch thickness and level top of final grouting with pit floor.

2.4 CONTROL EQUIPMENT

2.4.1 Motor Control Equipment

Provide elevator motor controller with electronic, soft-start motor starter. Enclose control equipment in factory-primed and baked-enamel coated sheet-metal cabinets with removable or hinged doors with ventilation louvers.

2.4.1.1 Electrical Isolation Protection

Provide individual isolation transformers and individual choke reactors for each individual motor. Provide filtering to maintain harmonic distortion below IEEE standards as measured at the elevator machine room disconnect.

2.4.2 Logic Control Equipment

Provide a non-proprietary microprocessor controller for each individual elevator and group controller. Store all programming in non-volatile memory. Provide a microprocessor control system that includes all hardware and software required to service and maintain the elevator and a technical support service that is routinely provided to any elevator service provider.

2.4.2.1 On-Board Diagnostic Panel

a. Provide, for each individual elevator microprocessor controller, an on-board diagnostic control and LCD display panel that allows unrestricted access to the comprehensive range of adjustable parameters necessary to perform installation, adjusting, service, maintenance, and testing of the elevator.

b. For each elevator group control, provide a separate on-board diagnostic control and LCD display panel that allows unrestricted access to the comprehensive range of options and adjustments necessary to perform installation, adjusting, service, maintenance, and testing of the

elevator group.

c. For both individual and group controllers, provide fault log capability to store all fault logs for up to 1 year of elevator service history. The on-board LCD display shall provide the capability to display and monitor any and all fault logs, trouble calls, and fault history for up to 1 year of elevator service history. The on-board LCD display shall also provide the capability to display and diagnose trouble calls, faults, and shutdowns.

2.4.2.2 External Port

For each individual elevator microprocessor controller, and elevator group microprocessor controller, provide a USB port or an RS 232 port that allows connection to an on-site or a remote portable laptop computer. Provide unrestricted access as specified in paragraph ON-BOARD DIAGNOSTIC PANEL.

2.4.2.3 Maintenance and Diagnostic Software

Provide three copies of the manufacturer's maintenance and service diagnostic software, with complete software documentation, that shall enable the same level of unrestricted access to all controllers of the same make and model, regardless of the installation date or location. Provide signed certification, from the manufacturer's corporate headquarters, that guarantees that the microprocessor software and access system will not terminate the unlimited and unrestricted access at any future date.

2.4.2.4 Acceptable Controller Suppliers

Provide microprocessor controller from one of the following controller manufacturers:


```
<TAB HEADERROWS="0" WIDTH="59"><WBK>   <STS>      <STY SID="s50">
    <ALN VERTICAL="BOTTOM"/>      </STY>   </STS>   <TDA COLUMNCOUNT="1"
    ROWCOUNT="4">      <COL STYLEID="s50" AUTOWIDTH="0" WIDTH="254.25"/>
         <ROW AUTOHEIGHT="0" HEIGHT="48.00">         <CEL STYLEID="s50">
               <DTA TYPE="STRING">Elevator Controls Corporation
    3525 La Grande Boulevard
    Sacramento, CA  95823
    </DTA>         </CEL>      </ROW>      <ROW AUTOHEIGHT="0"
    HEIGHT="48.00">         <CEL STYLEID="s50">         <DTA
    TYPE="STRING">G.A.L. Manufacturing Corporation
    50 East 153rd Street
    Bronx, New York 10451
    </DTA>         </CEL>      </ROW>      <ROW AUTOHEIGHT="0"
    HEIGHT="48.00">         <CEL STYLEID="s50">            <DTA
    TYPE="STRING">Motion Control Engineering, Inc.
    11354 Whiterock Road
    Rancho Cordova, CA   95742-6522
    </DTA>         </CEL>      </ROW>      <ROW AUTOHEIGHT="0"
    HEIGHT="47.25">         <CEL STYLEID="s50">            <DTA
    TYPE="STRING">Virginia Controls, Inc.
    2513 Mechanicsville Turnpike
    Richmond, Virginia  23223
    </DTA>         </CEL>      </ROW>
    </TDA></WBK><BRL/><BRL/><BRL/><BRL/><BRL/><BRL/><BRL/><BRL/><BRL/><BRL/><BRL/>
    <BRL/><BRL/></TAB>
```

2.5 OPERATING PANELS, SIGNAL FIXTURES, AND COMMUNICATIONS CABINETS

2.5.1 Capacity and Data Plates

Attach faceplates with spanner security screws. On car panel, provide stainless steel capacity and data plates, with name of elevator manufacturer.

2.5.2 Car and Hall Buttons

Provide recessed tamper-proof push buttons of minimum 3/4 inch size satin-finish stainless steel, with illuminating jewel center.

2.5.3 Hall Station Door Operating Buttons

Identical in size and design to hall call buttons, but not illuminating.

2.5.4 Passenger Car-Operating Panel

Provide each car with one car operating panel that contains operation controls and communication devices. Provide exposed, flush mounted buttons for the controls that must be passenger accessible. Provide service cabinet or keyed switches for those switches that should not be passenger accessible. Allow maximum 48 inch height between car floor and center line of top operating buttons. Allow 35 inch height between car floor and center line of bottom button. Use engraving and backfilling or photo etching for button and switch designations. Do not use attached signs.

2.6 PASSENGER CONTROLS

2.6.1 Passenger Car-Operating Panel

a. Illuminating operating call buttons identified to correspond to landings served by elevator car. When two openings are required by the facility program and shown on the plans at a particular floor, provide two buttons, marked "FRONT" and "REAR" above buttons.

b. "DOOR OPEN" and "DOOR CLOSE" buttons.

c. Keyed "STOP" switch in accordance with ASME A17.1/CSA B44, rule 2.26.2.

d. "ALARM" button in compliance with UFAS, ADA, and ASME A17.1/CSA B44, Rule 2.27.1. Furnish a red alarm button with engraved legend "ALARM." Allow alarm button to illuminate when pushed. Locate "ALARM" button at panel bottom.

e. "FIRE DEPARTMENT" key switch, with "OFF-HOLD-ON" positions, in that order with key to be removable in all positions. Provide fire sign or jewel, and audible signal device, in accordance with ASME A17.1/CSA B44 Section 2.27.3. Both visual and audible signals are activated when Phase I key switch in hall is activated or when smoke detector activates return of elevator(s) to main fire response floor. Keep visual and audible signal activated until car has reached main or designated alternate fire response floor. Upon arrival at fire response floor visual signal remains illuminated and audible signal becomes silent.

f. Emergency two-way communication. Provide momentary pressure, single illuminating pushbutton operated communication device that complies

with ASME A17.1/CSA B44, UFAS, and the Americans with Disabilities Act.

g. Sound-actuated firefighter phone jack.

2.6.1.1 Service Controls

a. Inspection switch that transfers car control to top-of-car inspection operating controls and prevents car operation from in-car control panel.

b. Independent service switch.

c. Two car light switches, one for light in car and one for lights on top and bottom of car frame.

d. Fan switch, two-speed.

e. 120-volt ac 60 Hz single-phase duplex electrical outlet of ground-fault-circuit-interrupt (GFCI) design.

f. Device for communication between car and elevator machine room.

2.6.1.2 Certificate Window

Provide 4 inch high by 6 inch wide certificate window in car operating panel for elevator inspection certificate.

2.6.2 Semi-Selective Door Operation

For elevator with rear opening at elevations that differ from front opening, provide semi-selective door operation so that only car door or gate opposite hoistway door opens when car stops.

2.6.3 Full-Selective Door Operation

For elevator with one or more rear openings at same level as front opening, provide full-selective operation with car and door operating buttons clearly marked for front and rear openings, front and rear car button for each such floor, and front and rear "DOOR OPEN" and "DOOR CLOSE" buttons. Only door for which button was operated opens or closes.

2.6.4 Switches and Devices

Provide elevator manufacturer's standard grade for switches and devices on car operating panel. Legibly and indelibly identify each device and its operating positions. Locate car dispatching buttons in identical positions in car operating panels for corresponding floors.

2.6.5 In-Car Position and Direction Indicator and Signal

Include in-car direction indicator in the in-car position indicator fixture.

2.6.5.1 In-Car Position Indicator and Signal

Provide horizontal electrical or electronic digital position indicator located minimum of 84 inch above car floor. Arrange indicator to show floor position of car in hoistway and its traveling direction. Indicate

position by illuminating of numeral or letter corresponding to landing at which car is passing or stopping. Provide audible signal to alert passenger that elevator is passing or stopping at a floor. Provide audible signals exceeding ambient noise level by at least 20 dbA with frequency not higher than 1500 Hz.

2.6.5.2 In-Car Direction Indicator and Signal

Provide visual and audible car direction indicators in car, indicating car traveling direction. For visual directional signal, provide arrow of minimum 2-1/2 inch in size. Use equilateral triangles for arrows, green for upward direction and red for downward direction. Provide audible signal that sounds once for upward direction and twice for downward direction.

2.6.6 Landing Position and Direction Indicator and Signal

Provide a single fixture containing the landing position and direction indicator.

2.6.6.1 Landing Position Indicator and Signal

Provide an electrical or electronic digital position indicator similar to the car position indicator. Arrange position indicator in wall horizontally above the door frame or vertically at the side of the door frame. Indicators to show floor position of car in hoistway. Indicate position by illumination of numeral or letter corresponding to landing at which car is passing or stopping.

2.6.6.2 Landing Direction Indicator and Signal

Provide landing direction indicator with visual and audible signal devices. Provide single direction indicator at terminal floors; "UP" and "DOWN" direction indicator at intermediate floors. Provide equilateral triangles minimum 2-1/2 inch in size, green for upward direction and red for downward direction. Provide electronic audible device that sounds once for upward direction and twice for downward direction. Provide audible signals exceeding ambient noise level by at least 20 decibels with frequency not higher than 1500 Hz.

2.7 HOISTWAY AND CAR EQUIPMENT

2.7.1 Guide Rails and Fastenings

Paint rail shanks with one coat black enamel. Only T-section type rail is acceptable.

2.7.2 Car Buffers

Provide buffer data plate on each buffer.

2.7.3 Pit Equipment

2.7.3.1 Pit "STOP" Switch

Provide push/pull type pit "STOP" switch for stopping elevator motor, independent of regular operating device. Locate on same side of hoistway as ladder.

2.7.3.2 Ladders

Provide galvanized steel ladder conforming to 29 CFR 1910.27 with minimum 7 inch distance between rung and wall. Locate ladder on hoistway side wall closest to hoistway door opening.

2.7.3.3 Lighting of Pits

Locate pit light not less than 6 feet above pit floor. Locate switch on same side of hoistway as ladder. Provide GFCI duplex receptacle in each pit.

2.8 TERMINAL STOPPING DEVICES

Provide each elevator with a terminal stopping device.

2.8.1 Wiring and Traveling Cables

Suspend traveling cables by means of self-tightening webbed devices.

2.8.2 Emergency Signaling Device

Provide audible signaling device, operable from Car Operating Panel button marked "ALARM". Mount the audible signaling device in hoistway.

2.9 PASSENGER CAR AND HOISTWAY DOOR ACCESSORIES

ASME A17.1/CSA B44, Sections 2.12, 2.13, 2.14, and 3. Provide infra-red curtain unit (ICU) with multiple infra-red beams that protect to the full height of the door opening. Extend minimum coverage from 2 inches off the floor to 70 inch above floor level. Door operation must meet the requirements of ASME A17.1/CSA B44 Rule 2.27.1 and 2.13.5. Provide high-speed electric operator, safety interlocks for car and hoistway doors, and electric safety contact to prevent car operation unless doors are closed. Provide electrical circuitry that restores car to service at a specified time lapse with time out circuitry as an option for intensive service elevators.

2.10 PASSENGER ELEVATOR GUIDES, FRAME, PLATFORM, AND ENCLOSURE

2.10.1 Roller Guides

Provide spring-loaded roller guide assemblies in adjustable mountings on each side of car in accurate alignment at top and bottom of car frame.

2.10.2 Car Enclosure, Car Door, and Car Illumination

Provide natural and forced ventilation, stainless steel hooks, with fire retardant pads.

2.10.2.1 Return Panels, Entrance Columns, Cove Base, and Transom

Provide 14 gauge minimum non perforated steel. Apply sound-deadening mastic on car shell and all exterior components.

2.10.2.2 Car Top

Provide reinforced 12 gauge minimum steel with hinged emergency exit openable by hand from car top only. Provide electrical contact which

prevents operation of elevator when emergency exit is open. Provide sound-deadening mastic on all exterior components.

2.10.2.3 Car Door

Provide 16 gauge minimum steel, sandwich construction without binder angles. Provide a minimum of 2 door guide assembles per door panel, one guide at leading and one at trailing door edge with guides in the sill groove their entire length of travel.

2.10.2.4 Car Entrance Sill

Provide one piece cast white bronze or nickel silver entrance sill. Set sills level and flush with floor finish. Use same material for hoistway and car entrance sills.

The A/E must review and verify that CARPET is NOT provided in these elevators.

2.11 PASSENGER ELEVATOR HOISTWAY DOORS AND ENTRANCES

Provide hoistway entrance assemblies which have a minimum 1-1/2 hour fire rating.

2.11.1 Hoistway Entrance Frames

Frame of 14 gauge thick stainless steel. Solidly grout uprights of entrances to height of 5 feet.

2.11.2 Hoistway Entrance Sills

Provide one-piece cast solid white bronze or nickel silver entrance sills. After sill is set level and flush with finished floor height, solidly grout under full length of sill. Use same material for hoistway and car door sills.

2.11.3 Hoistway Entrance Doors

Provide hoistway entrance door constructed with hollow metal non-vision construction with flush surfaces on car and landing sides. Provide a minimum of 2 door guide assembles per door panel, one guide at leading edge and one at trailing door edge with guides in the sill groove the entire length of travel.

2.11.4 Entrance Fascias and Dust Covers

Provide sheet metal hoistway door track dust covers at each landing. Dust covers must cover door locks and door roller tracks and extend the full width of the door track and associated hardware.

2.11.5 Hoistway Ventilation

Provide hoistway ventilation directly to outside air by fixed louver through side wall of hoistway at top of hoistway. The net size of the louver shall be a minimum of 3.5 percent of the cross section of hoistway.

2.12 HANDICAPPED AND MEDICAL SERVICES ACCESS

2.12.1 Provision For Handicapped

Refer to 36 CFR 1191, Sections 4.10 for Elevators, 4.30 for Signage, and 4.31 for Telephones.

2.12.2 Emergency Medical Service

ICC IBC - Chapter 30, for elevators and signage.

2.13 EMERGENCY POWER OPERATION

Upon outage of normal power and initiation of emergency power, provide circuitry and wiring to operate elevator and telephone to accomplish operation sequences. During emergency power operation, provide a sign reading "EMERGENCY POWER" flashing in each car station. At the same time, provide operable Firefighters' Service.

PART 3 EXECUTION

3.1 INSTALLATION

Install in accordance with manufacturer's instructions, ASME A17.1/CSA B44, 36 CFR 1191, and NFPA 70.

3.1.1 Traveling Cables

Do not allow abrupt bending of traveling cables.

3.1.2 Automatic Shutoff Valve

Locate in supply-return line, as close as possible to cylinder-plunger unit.

3.1.3 Structural Members

Do not cut or alter. Restore any damaged or defaced work to original condition.

3.1.4 Safety Guards

Completely enclose selector cables or tapes exposed to possibility of accidental contact in machine room with 16 gage thick sheet metal or expanded metal guards, both horizontally and vertically. Protect exposed gears, sprockets, and selector drums from accidental contact in accordance with ASME A17.1/CSA B44.

3.1.5 Other Requirements

Include recesses, cutouts, slots, holes, patching, grouting, and refinishing to accommodate elevator installation. Use core drilling to drill all new holes in concrete. Finish work to be straight, level, and plumb. During installation, protect machinery and equipment from dirt, water, or mechanical damage. At completion, clean all work, and spot paint. Completion of firefighters' service includes installation and wiring of all smoke detectors in accordance with ASME A17.1/CSA B44, Section 2.27.3.2. Coordinate smoke detector installation for firefighters' service.

3.2 FIELD QUALITY CONTROL

a. After completing elevators system installation, notify Contracting Officer that elevator system is ready for final inspection and acceptance test. In conjunctin with the notification submit a plan detailing the testing procedures 60 days prior to performing the elevator tests. Contracting Officer will obtain services of Naval Facilities Engineering Command certified elevator inspector.

b. Perform all required tests and demonstrate proper operation of each elevator system and prove that each system complies with contract requirements and ASME A17.1/CSA B44. Inspection procedures in ASME A17.2 form a part of this inspection and acceptance testing. Conduct all testing and inspections in the presence of both the Elevator Specialist and the Elevator Inspector. Demonstrate the proper operation of all equipment at various date settings, selected by the Elevator Inspector, ranging from the date of contract award through 1 January 2099.

c. The Elevator Inspector shall complete, sign and post the results of all tests and inspection results and form NAVFACENGCOM 9-11014/23 (Rev. 7-88), Elevator Inspection Certificate after successful completion of inspection and testing. The Contractor is responsible for all costs involved with reinspection and retesting required to correct discrepancies discovered during testing and the subsequent retesting required ,including all costs and expenses incurred by the Government Furnished Inspector.

3.2.1 Testing Materials and Instruments

Provide testing materials and instruments required for final inspection. Include calibrated test weights, tachometer, 600-volt megohm meter, volt meter and ammeter, three Celsius calibrated thermometers, door pressure gage, spirit level, stop watch, hydraulic pressure test gauge, and a 100 foot tape measure.

3.2.2 Field Tests

Submit Field Tests Reports after completing each of the specified tests, as required in the Submittals paragraph.

3.2.2.1 Endurance Tests

Test each elevator for a period of one hour continuous run, with specified rated load in the car. Restart the one hour test period from beginning, following any shutdown or failure. During the test run, stop car at each floor in both directions of travel for standing period of 10 seconds per floor. The requirements for Rated Speed, Leveling, Temperature Rise, and Motor Amperes testing specified herein must be met throughout the duration of the Endurance test.

3.2.2.2 Automatic Shutoff Valve Tests

Test the automatic shutoff valve twice. Once at beginning of acceptance test and again at conclusion of one-hour Endurance test to ensure consistent performance of shutoff valve, regardless of temperature of equipment and oil.

3.2.2.3 Speed Tests

Determine actual speed of each elevator in both directions with rated load and with no load in elevator car. Make Speed tests before and immediately after Endurance test. Determine speed by tachometer reading, excluding accelerating and slow-down zones in accordance with ASME A17.2, Section 2.22.4. Minimum acceptable speed is the Rated Speed as specified. Maximum acceptable elevator speed is 110 percent of Rated Speed. The maximum load on car platform during loading or unloading shall not exceed 150 percent of rated load.

3.2.2.4 Leveling Tests

Test elevator car leveling devices for landing accuracy of plus or minus 1/4 inch at each floor with no load in car, symmetrical load in car, and with rated load in car in both directions of travel. Determine accuracy of floor landing both before and immediately after endurance tests. Do not exceed the maximum load of 150 percent of rated load on car platform during loading or unloading.

3.2.2.5 Pressure Tests

Check operating pressure at pump and cylinder head under no load and rated load. Test pressure at which relief valve operates.

3.2.2.6 Insulation Resistance Tests

Perform tests to ensure wiring systems free from short circuits and grounds. Minimum acceptable insulation resistance for electrical conductors is one megohm between each conductor and ground and between each conductor and other conductors. Prior to megohm meter test, make provision to prevent damage to the electronic devices.

3.2.2.7 Temperature Rise Tests

Determine the temperature rise of the hydraulic pump motor during the full load test run for a minimum of one hour. Under these conditions, do not exceed maximum acceptable temperature rise indicated on the manufacturer's data plate. Start test only when equipment is within 5 degrees C of ambient temperature.

3.2.2.8 Motor Ampere Tests

Measure and record motor amperage when motor is running and elevator is lifting at rated load and speed. Measure and record motor amperage at the beginning and the end of Endurance test.

3.3 OPERATION AND MAINTENANCE TRAINING

The Elevator Specialist shall instruct Government personnel in care, adjustment, and maintenance of elevator equipment for a period of not less than 5 working days immediately following acceptance of system. Submit Operation and Maintenance Manuals as required in the Submittals paragraph.

-- End of Section --

2.5.2.2 External Port

For each individual elevator microprocessor controller, and elevator group microprocessor controller, provide a USB port or an RS 232 port that allows connection to an on-site or a remote portable laptop computer. Provide unrestricted access as specified in paragraph ON-BOARD DIAGNOSTIC PANEL.

2.5.2.3 Maintenance and Diagnostic Software

Provide three copies of the manufacturer's maintenance and service diagnostic software, with complete software documentation, that shall enable the same level of unrestricted access to all controllers of the same make and model, regardless of the installation date or location. Provide signed certification, from the manufacturer's corporate headquarters, that guarantees that the microprocessor software and access system will not terminate the unlimited and unrestricted access at any future date.

2.5.2.4 Acceptable Controller Suppliers

Provide microprocessor controller from one of the following controller manufacturers:

Elevator Controls Corporation 3525 La Grande Boulevard Sacramento, CA 95823
G.A.L. Manufacturing Corporation 50 East 153rd Street Bronx, New York 10451
Motion Control Engineering, Inc. 11354 Whiterock Road Rancho Cordova, CA 95742-6522
Virginia Controls, Inc. 2513 Mechanicsville Turnpike Richmond, Virginia 23223

The table in the pdf file - page 11 should look like this when printed.

2.6 OPERATING PANELS, SIGNAL FIXTURES, AND COMMUNICATIONS CABINETS

2.6.1 Capacity and Data Plates

Attach faceplates with spanner security screws. On car panel, provide stainless steel capacity and data plates, with name of elevator manufacturer.

2.6.2 Car and Hall Buttons

Provide recessed tamper-proof push buttons of minimum 3/4 inch size satin-finish stainless steel, with illuminating jewel center.

2.6.3 Hall Station Door Operating Buttons

****
This specification section contains proprietary products.
****

SECTION 22 33 30.05 22

INTEGRATED PV-THERMAL SYSTEM
09/10

PART 1 GENERAL

1.1 REFERENCES

The publications listed below form a part of this specification to the extent referenced. The publications are referred to within the text by the basic designation only.

AMERICAN SOCIETY OF CIVIL ENGINEERS (ASCE)

ASCE/SEI 7-05	(2005; R 2006) Minimum Design Loads for Buildings and Other Structures

AMERICAN SOCIETY OF HEATING, REFRIGERATING AND AIR-CONDITIONING ENGINEERS (ASHRAE)

ASHRAE 90.1 - IP	(2007; Supplement 2008; Addenda r 2009) Energy Standard for Buildings Except Low-Rise Residential Buildings
ASHRAE 90.1 - SI	(2007; Supplement 2008; Errata 2009; Errata 2009; INT 1-3 2009) Energy Standard for Buildings Except Low-Rise Residential Buildings
ASHRAE 93	(2003; Errata 2003) Methods of Testing to Determine the Thermal Performance of Solar Collectors
ASHRAE 96	(1980; R 1989) Methods of Testing to Determine the Thermal Performance of Unglazed Flat-Plate Liquid-Type Solar Collectors

AMERICAN WELDING SOCIETY (AWS)

AWS A5.8/A5.8M	(2004) Specification for Filler Metals for Brazing and Braze Welding

ASME INTERNATIONAL (ASME)

ASME B16.39	(2009) Standard for Malleable Iron Threaded Pipe Unions; Classes 150, 250, and 300
ASME B31.1	(2007; Addenda a 2008; Addenda b 2009) Power Piping

ASME B40.100	(2005) Pressure Gauges and Gauge Attachments
ASME BPVC SEC VIII D1	(2010) BPVC Section VIII-Rules for Construction of Pressure Vessels Division 1

ASTM INTERNATIONAL (ASTM)

ASTM F 876	(2009) Crosslinked Polyethylene (PEX) Tubing
ASTM F 877	(2007) Crosslinked Polyethylene (PEX) Plastic Hot- and Cold- Water Distribution Systems
ASTM A 193/A 193M	(2009) Standard Specification for Alloy-Steel and Stainless Steel Bolting Materials for High-Temperature Service and Other Special Purpose Applications
ASTM A 194/A 194M	(2009) Standard Specification for Carbon and Alloy Steel Nuts for Bolts for High-Pressure or High-Temperature Service, or Both
ASTM A 216/A 216M	(2008) Standard Specification for Steel Castings, Carbon, Suitable for Fusion Welding, for High-Temperature Service
ASTM A 351/A 351M	(2006) Standard Specification for Castings, Austenitic, for Pressure-Containing Parts
ASTM A 792/A 792M	(2009a) Standard Specification for Steel Sheet, 55% Aluminum-Zinc Alloy-Coated by the Hot-Dip Process
ASTM B 32	(2008) Standard Specification for Solder Metal
ASTM B 763	(2008a) Standard Specification for Copper Alloy Sand Castings for Valve Application
ASTM B 88	(2009) Standard Specification for Seamless Copper Water Tube
ASTM B 88M	(2005) Standard Specification for Seamless Copper Water Tube (Metric)
ASTM D 1970	(2009) Self-Adhering Polymer Modified Bituminous Sheet Materials Used as Steep Roofing Underlayment for Ice Dam Protection
ASTM D 903	(1998; R 2004) Peel or Stripping Strength of Adhesive Bonds
ASTM E 1592	(2005) Structural Performance of Sheet Metal Roof and Siding Systems by Uniform Static Air Pressure Difference

ASTM E 1646	(1995; R 2003) Standard Test Method for Water Penetration of Exterior Metal Roof Panel Systems by Uniform Air Pressure Difference
ASTM E 1680	(1995; R 2003) Standard Test Method for Rate of Air Leakage Throough Exterior Metal Roof Panel Systems
ASTM E 2140	(2001; R 2009) Standard Test Method for Water Penetration of Metal Roof Panel Systems by Static Water Pressure Head
ASTM E 283	(2004) Determining the Rate of Air Leakage Through Exterior Windows, Curtain Walls, and Doors Under Specified Pressure Differences Across the Specimen
ASTM E 330	(2002) Structural Performance of Exterior Windows, Doors, Skylights and Curtain Walls by Uniform Static Air Pressure Difference
ASTM E 84	(2010) Standard Test Method for Surface Burning Characteristics of Building Materials
ASTM E 96/E 96M	(2005) Standard Test Methods for Water Vapor Transmission of Materials
ASTM F 1199	(1988; R 2004) Cast (All Temperatures and Pressures) and Welded Pipe Line Strainers (150 psig and 150 degrees F Maximum)

INSTITUTE OF ELECTRICAL AND ELECTRONICS ENGINEERS (IEEE)

IEEE 519	(1992; R 1993; Errata 2004) Recommended Practices and Requirements for Harmonic Control in Electrical Power Systems

MANUFACTURERS STANDARDIZATION SOCIETY OF THE VALVE AND FITTINGS INDUSTRY (MSS)

MSS SP-110	(1996) Ball Valves Threaded, Socket-Welding, Solder Joint, Grooved and Flared Ends
MSS SP-25	(2008) Standard Marking System for Valves, Fittings, Flanges and Unions
MSS SP-58	(2009) Pipe Hangers and Supports - Materials, Design and Manufacture, Selection, Application, and Installation
MSS SP-69	(2003) Pipe Hangers and Supports - Selection and Application (ANSI Approved American National Standard)

NATIONAL FIRE PROTECTION ASSOCIATION (NFPA)

NFPA 70	(2008; TIA 08-1) National Electrical Code

SOLAR RATING AND CERTIFICATION CORPORATION (SRCC)

SRCC CSCWHSR	(2004) Summary of SRCC Certified Solar Collector and Water Heating System Ratings
SRCC OG-100	(1995) Operating Guidelines for Certifying Solar Collectors

U.S. DEPARTMENT OF DEFENSE (DOD)

MIL-STD-101	(1970; Rev B) Color Code for Pipelines & for Compressed Gas Cylinders

U.S. GENERAL SERVICES ADMINISTRATION (GSA)

CID A-A-59617	(Basic) Unions, Brass or Bronze, Threaded Pipe Connections and Solder-Joint Tube Connections

UNDERWRITERS LABORATORIES (UL)

UL 1703	(2002; R 2008) Standard for Safety Flat-Plate Photovoltaic Modules and Panels - Third Edition
UL 1741	(2010) Standard for Safety Inverters, Converters, Controllers and Interconnection System Equipment for Use With Distributed Energy Resources - Second Edition
UL 580	(2006; R 2009) Tests for Uplift Resistance of Roof Assemblies
UL 790	(2004; R 2008) Standard Test Methods for Fire Tests of Roof Coverings

1.2 SYSTEM DESCRIPTION

****
The system specified herein contains a proprietary system marketed by:
Dawn Solar Systems, Inc.
183 Route 125, Suite A-7
Brentwood, NH 03833
Phone: 866-338-2018
email info@dawnsolar.com
Webb site: www.dawnsolar.com
****

Provide an Integrated PV-Thermal System arranged for preheating of service (domestic and/or process) water using solar thermal collectors hidden from view, mounted beneath the standing seam roof and photovoltaic (PV) power system attached directly to the roofing panels. Include in the system all components required for the complete operation of the system. The system must not add to wind profile and the total weight must not exceed five (5)

pounds per square foot.

1.3 SUBMITTALS

Government approval is required for submittals with a "G" designation; submittals not having a "G" designation are for Contractor Quality Control approval. The following shall be submitted in accordance with Section 01 33 00 SUBMITTAL PROCEDURES Section 01 33 00.05 20 CONSTRUCTION SUBMITTAL PROCEDURES:

SD-02 Shop Drawings

Integrated PV-Thermal System

Solar thermal collecting system

Field Seam Metal Roof Panels

Shop drawings prepared specifically for this project; showing dimensions of metal roofing and accessories, fastening details and connections, and interface with other products.

As-Built Drawings

Include solar thermal collector structural supports, solar thermal collector control sequences, and instrument mounting and interconnections.

SD-03 Product Data

Piping

Instrumentation

Valves

Piping specialties

Pumps

Solar hot water storage tanks

Solar Thermal System Collectors

Heat exchangers

Solar-boosted domestic water heaters

Collector heat transfer fluid

Field Seam Metal Roof Panels

Manufacturer's catalog data, detail sheets, and specifications for each type of product provided.

Photovoltaic Power System

Include electrical diagram and installation drawings of the complete photovoltaic components including photovoltaic modules,

inverter/transformer, fuses, cables, conductors, connectors, and all other related equipment.

Provide complete Photovoltaic material list as provided by photovoltaic manufacturer.

SD-04 Samples

Roofing panel

Submit a 300 mm 12 inch long by full width section of typical panel.

For color selection, submit 50 by 100 mm 2 by 4 inch metal samples in color, finish and texture specified.

SD-06 Test Reports

Inspection and Testing

SD-07 Certificates

Solar thermal collecting system installation

Submit technical representative's certification that the solar energy system installation has been done as recommended by the manufacturer.

Field Seam Metal Roof Panels

Provide written copy of certification program and approval letter from roofing manufacturer.

SD-08 Manufacturer's Instructions

Solar thermal collecting system

SD-10 Operation and Maintenance Data

Submit in accordance with Section 01 78 23 OPERATION AND MAINTENANCE DATA Section 01 78 24.05 20 FACILITY OPERATION AND MAINTENANCE SUPPORT INFORMATION.

Solar thermal collecting system, Data Package

Photovoltaic Power System

Include equipment data sheets and installation/operation manuals for all major components.

SD-11 Closeout Submittals

Posted operating instructions for solar energy system and Photovoltaic Power System

1.4 QUALITY ASSURANCE

For brazing and soldering procedure qualification, conform to ASME B31.1; for preparation and procedures for joints, conform to ASME B31.1.

1.4.1 Photovoltaic Power System

Manufacturer's Qualifications: The manufacturer of the photovoltaic panels shall have a minimum of 10 years of successful experience continuously manufacturing solar electric panels of the type specified herein.

1.4.2 Field Seam Metal Roof Panels

Manufacturer's Qualifications: The roofing manufacturer shall have been in the business as a roofing manufacturer for at least 10 years.

Installer Qualifications: Shall have been in the roofing installation business for a minimum of 5 years. Contractor must also be certified and approved installer of the sheet metal roofing manufacturer for installation of all components of roofing and solar assemblies.

1.4.3 Operation and Maintenance Data

Submit solar thermal collecting system data package for the following items:

a. Troubleshooting guide for solar energy systems

b. Solar thermal collector warranty

c. Operation instructions

d. Preventive maintenance and inspection data, including a schedule for system operators.

1.5 DELIVERY, STORAGE, AND HANDLING

Protect all equipment delivered and placed in storage from the weather, excessive humidity and excessive temperature variation, and dirt and dust or other contaminants.

Deliver photovoltaic system to job site properly packaged to provide protection against transportation damage. Adequately protect equipment placed in storage at the construction site that can be affected by weather conditions, dirt or other contaminants, and construction activities.

1.6 SYSTEM WARRANTY

Provide written warranty, executed by manufacturer, agreeing to repair or replace components of the entire building Integrated PV-Thermal System against defects in materials and or manufacturing workmanship for a period of 5 years from the date of complete installation and government acceptance.

1.6.1 Solar Thermal System Warranty

Provide written warranty, executed by the manufacturer agreeing to repair or replace integrated thermal system components against defects in materials and workmanship for a period of 25 years from the date of complete installation and government acceptance.

1.6.2 Field Seam Metal Roof Panels

Provide manufacturer's standard warranty document executed by authorized company official. Provide warranties as Follows:

a. Warranty covering the metal substrate against rupture, perforation, and structural failure due to normal atmospheric corrosion.

b. Warranty on paint finish against cracking, peeling, blistering, chalk, and color change.

c. Provide 35 year Kynar 500/Hylar 5000 limited finish warranty.

d. Provide 20 year warranty for substrate against corrosion and perforation.

Manufacturer's Weathertightness Warranty: Provide the manufacturers NDL roofing warranties for workmanship and material covering a period of 35 years from date of substantial completion and Government acceptance.

1.6.3 Photovoltaic Power System

Provide written warranty, executed by manufacturer, agreeing to repair or replace components of the entire building integrated photovoltaic system against defects in materials and or manufacturing workmanship for a period of five years from the date of complete installation and government acceptance.

Provide written warranty, executed by manufacturer, agreeing to repair or replace laminates that exhibit power output of less than 80% for a period of 20 years from the date of complete installation and government acceptance.

1.7 POSTED OPERATING INSTRUCTIONS

Provide for piping identification codes and diagrams of solar thermal system and diagrams of the photovoltaic power system, including operating instructions, control matrix, and trouble shooting instructions.

PART 2 PRODUCTS

2.1 SOLAR THERMAL COLLECTING SYSTEM

Provide the necessary materials to fabricate solar thermal collecting system in accordance with this section. **This specification is written with the Dawn Solar Thermal Collection System Model 3004L as manufactured by Dawn Solar Systems, Inc. as the basis of acceptable performance.** Provide factory-prefabricated solar thermal equipment packages which include heat exchanger, storage tanks, pumps and controls and which meet the requirements of this section. The solar thermal collecting system shall be valved to provide for shut-off from the service water supply without interrupting normal cold water service to the facility.

2.1.1 Standard Products

Provide materials and equipment which are the standard products of a manufacturer regularly engaged in the manufacture of such products and that essentially duplicate items that have been in satisfactory use for at least 2 years prior to bid opening. Equipment shall be supported by a service organization that is, in the opinion of the Contracting Officer, reasonably convenient to the site.

2.1.2 Piping System

Piping system shall be complete with pipe, pipe fittings, valves, hangers, inserts, supports, anchors, guides, sleeves, and accessories. System materials shall conform to manufacturer's requirements. The piping from the manifold to hot water heaters will be copper.

2.1.2.1 PEX-AL-PEX Piping

Crosslinked Polyethylene/Aluminum/Crosslinked Polyethylene (PEX-AL-PEX) piping used for collector array. Piping and fittings shall conform to ASTM F 876 and ASTM F 877. Make all mechanical joints visible.

2.1.2.2 Copper Tubing

ASTM B 88M ASTM B 88, minimum Type L, hard drawn copper tubing, except that the connection tubes of collectors may be soft-drawn. Make all mechanical joints visible.

2.1.2.3 Hangers and Supports

MSS SP-58, as required by MSS SP-69.

2.1.2.4 Unions

CID A-A-59617, solder joint.

2.1.2.5 Strainers

ASTM F 1199, removable basket and screen, Y pattern, cast bronze strainer with pressures to 862 kPa 125 psig, simplex type; or a combination elbow-strainer with straightening vanes and strainer arranged for horizontal flow.

2.1.2.6 Pressure Gauges

ASME B40.100. Pressure gauges shall be provided with throttling type needle valve or a pulsation dampener and shutoff valve. Minimum dial size shall be 90 mm 3-1/2 inch.

2.1.2.7 Thermostats

The system shall include temperature gauges so that an observer can determine if the system is operating properly and is providing solar heated water.

2.1.2.8 Dielectric Union

Provide insulated union with a galvanized steel female pipe-threaded end and a copper solder joint end conforming to ASME B16.39, Class 1. Provide a dry insulation barrier, impervious to water and capable of withstanding a 600 volt breakdown test and limiting galvanic current to one percent of the short circuit current in a corresponding bimetallic joint.

2.1.2.9 Valves

Ensure all valves comply with solar thermal collecting system manufacturer and solar thermal collecting system requirements. ASTM B 763 for brass valves and ASTM A 216/A 216M or ASTM A 351/A 351M. Provide end connections

as indicated. Unless otherwise indicated, valves shall open when turned counterclockwise. In some cases, provide valves actuated by electric motors. Provide valve construction with rating indicated, MSS SP-25 marking modulating, brass or steel body construction, provide nonferrous or stainless steel valve seats and moving parts exposed to fluid, compatible with the operating conditions, and thermostatically controlled. Construct valves to permit replacing valve seals without draining the system. MSS SP-110 for threaded, socket-welding, solder joint, grooved and flanged ends.

2.1.3 Piping Specialties

2.1.3.1 Bolts and Nuts

Stainless steel; ASTM A 193/A 193M for bolts and ASTM A 194/A 194M for nuts.

2.1.3.2 Gaskets, Sealants and Couplings

Use fluorinated elastomers, ethylene-propylene-diene-terpolymer (EPDM) or silicone gaskets for system compatibility. Gaskets, sealants, and coupling hoses shall not be adversely affected by contact with fluids or the environment to an extent that will significantly impair their ability to function.

2.1.3.3 Brazing Metal

AWS A5.8/A5.8M, 15 percent silver-base alloy, minimum melting point 816 degrees C 1,500 degrees F, for copper pipes rated at maximum 862 kPa and 177 degrees C 125 psi and 350 degrees F. Provide cadmium free filler metals.

2.1.3.4 Solder Metal

ASTM B 32, Alloy Grade Sb5, Sn95, or Sn96, with minimum melting 221 degrees C 430 degrees F.

2.1.4 Piping Identification Labels

Plastic slip-on or adhesive backed labels conforming to MIL-STD-101.

2.1.5 Circulating Pumps

A variable or multiple speed AC or DC pump as designed and furnished by the manufacturer as part of the balance of system. The motors shall have sufficient power for the service required and be suitable for the available electric service and for the heat transfer fluid used, and shall conform to the requirements specified in Section 26 20 00 INTERIOR DISTRIBUTION SYSTEM. Circulating pumps shall be electrically-driven, single-stage, centrifugal type. The pumps shall have a capacity not less than that indicated. The pump shaft shall be constructed of corrosion resistant alloy steel, sleeve bearings and glands of bronze designed to accommodate a mechanical seal. Pumps shall have stainless steel impellers and casings of bronze. The motors shall be controlled by suitable switches that can be activated by either the differential temperature controller or by manual override (Hand-Off-Automatic). Each pump suction and discharge connection shall be provided with a pressure gauge as specified.

2.1.6 Solar Hot Water Storage Tanks

The solar hot water tanks shall be sized to accommodate the thermal systems output and furnished by the manufacturer as part of the balance of system. The [two (2)][_____] solar system hot water storage tank[s] shall have a storage volume of [1704 liters 450 gallons][_____] and shall be as shown on the drawings. Solar system storage tank shall conform to specifications for hot water storage tanks in Section 22 00 00 PLUMBING, GENERAL PURPOSE. Tank penetrations shall be designed to allow for connections to copper piping without risk of corrosion due to dissimilar metals, and shall be factory installed as indicated.

2.1.7 Tank Insulations and Jackets

Comply with Section 23 07 00 THERMAL INSULATION FOR MECHANICAL SYSTEMS. Separate aboveground tanks from supports with insulation.

2.1.8 Mounting and Assembly Hardware

Mounting brackets and hinges shall be aluminum or stainless steel. Assembly hardware including all bolts, washers, and nuts shall be stainless steel.

2.1.9 Solar Thermal System Collectors

Site built solar thermal collection system shall be designed to occupy a one (1) inch of space between the waterproof roofing underlayment/reflective barrier and the roofing material. The solar thermal collector system will allow fastening of the roofing material directly to the roof deck. The solar thermal collector system shall comply with ASHRAE 93, ASHRAE 96, SRCC OG-100 and SRCC CSCWHSR. Supply with all materials necessary for integration into building's envelope. Include the following design features:

2.1.9.1 Solar Thermal System Collector Performance

Thermal performance shall be plotted on the thermal efficiency curve in accordance with ASHRAE 93. Manufacturer's recommended volumetric flow rate and the design pressure drop at the recommended flow rate shall be as shown on the drawings. Manufacturer's recommendations shall allow for balanced flow and for thermal expansion considerations.

2.1.9.2 Solar Thermal Collector System Weight

Maximum filled weight not to exceed 24.40 kg per square meter 5 pounds per square foot of gross solar thermal system area.

2.1.9.3 Solar Thermal Collector System Layout

Solar thermal collector system shall consist of an assembly of solar thermal loops manifolded together as shown on the drawings. Solar collectors shall be assembled as shown. Minimum spacing between rows shall be as shown.

2.1.9.4 Solar Thermal Collector System Piping

The solar thermal collector system piping shall include interconnecting piping and manifolds between the solar thermal collector system loops, and shall be connected in the configuration as indicated on the drawings with

approximately equal pipe length for any possible flow path. Flow rate through the solar thermalcollector system loops shall be as indicated on the drawings. Each component of the solar thermal collector system shall be capable of being isolated by valves. Manually operated air vents shall be located at system high points.

2.1.9.5 Supports for Solar Thermal System Collector

Support shall be provided by a pre-engineered sub purlin system on a properly prepared metal roof and installed in accordance with the recommendations of the solar thermal collector system manufacturer. Support structures provided by the solar thermal collector system manufacturer may be used if they meet the stated specification. Support structure shall secure the solar thermal collector system as shown on the drawings. Support structure shall withstand static weight of the filled solar thermal collector system and piping, wind, snow, seismic, and other loads as indicated.

2.1.10 Heat Exchangers

The heat exchanger construction and testing shall be in accordance with ASME BPVC SEC VIII D1. Minimum design pressure rating shall be as shown. Provide relief vent with a visual indicator to detect leaks by the change of coloring in the heat transfer fluid.

2.1.11 Solar-Boosted Domestic Water Heaters

ASHRAE 90.1 - SI ASHRAE 90.1 - IP and UL listed. Provide built-in, double wall heat exchanger and factory insulation jacket.

2.1.12 Pipe Insulation

Pipe insulation and coverings shall be applied in accordance with Section 23 07 00 THERMAL INSULATION FOR MECHANICAL SYSTEMS as called out for steam piping to 103 kPa 15 psig. Solar thermal collector system piping insulation shall be capable of withstanding 121 degrees C 250 degrees F, except that piping within 450 mm 1.5 feet of collector connections shall be capable of withstanding 180 degrees C 360 degrees F.

2.1.13 Expansion Tank

Expansion tank, fill and drain assemblies, mechanical thermostats, air scoops and vents in compliance with best practices as described by solar thermal collector system manufacturer. Expansion tank shall be constructed and tested in accordance with ASME BPVC SEC VIII D1 and as applicable for a working pressure of 862 kPa 125 psig. Expansion tank acceptance volume, total tank size and arrangement shall be as shown. Tank shall be provided with pressure relief valve. Tank shall be provided with precharged pressure as shown.

2.1.14 Heat Transfer Fluid

Solar collector loop fluid shall be uninhibited USP/food-grade propylene-glycol and shall be mixed with distilled or demineralized water to form a 50 percent by volume propylene-glycol solution as shown.

Conform to the following:

a. Liquid useful temperature range of -40 to 204 degrees C 400

degrees F.

b. Non-ionic, high dielectric, non-aqueous, non-reactive, stable fluid which does not corrode copper, aluminum, iron, or steel, or attack plastics.

c. Flash point exceeding 193 degrees C 380 degrees F.

d. Fluid stability of ten years.

e. Maximum acute oral toxicity of 5 grams per kilogram 5000 ppm.

2.1.15 Control and Instrumentation Subsystem

2.1.15.1 Solar Differential Control Equipment

A differential controller will operate the solar circulator based on a difference in temperature between the roof collector and the bottom of the solar storage tank. This temperature differential will be adjustable in the field. This unit will be furnished by the manufacturer as part of the balance of system and include an Energy Monitoring System. Differential temperature control equipment shall include a switching relay or solid state output device for pump control. Thermostat shall operate in the on-off mode. Controller accuracy shall be plus or minus 0.5 degree C 1 degree F. Controller shall be compatible with manufacturer supplied thermistor temperature sensors. Differential control shall provide direct digital temperature readings of all temperatures sensed. Control shall indicate visually when pumps are energized. Control ambient operating range shall be indicated by solar thermal collector system manufacturer.

2.1.15.2 Solar Energy Monitoring System

The solar energy monitoring system consist of a large graphic display with backlight that accommodates several languages, temperature sensors, variable speed pump control, manual test mode, easy to use interface with 1 GB SD card permanent memory storage. The system will record and view system data for energy, pump operation etc., with SD card interface. The system also provides a graphic view for 5 system configurations with extra functions, 2 Pump outputs, 2 Analog sensor inputs for flow and pressure, 1 Impulse flow meter input, pump exercise function. System capabilities include monitoring for errors such as short or open circuits to sensors, pump failure. Collector sensor location can be external or internal to collector.

2.1.15.3 Sensor and Control Wiring

Install in accordance with manufacturer's instructions, and applicable electrical and plumbing code standards. The control subsystem shall include such provision for bypass, adjustment or override controls as are required to facilitate installation, startup, operation, shutdown and maintenance of the system. Safety controls shall not have provision for bypass or override. All switches and their function shall be labeled and easily accessible.

2.1.15.4 Thermistor Temperature Sensors

Temperature sensors shall be multiple 1k type thermistor's units supplied by the differential temperature controller manufacturer, with an accuracy of plus or minus 1 percent at indicated temperature. Quantities will vary

as a function of overall size.

2.1.16 Manifold

Provide supply and return manifold sets as part of each solar thermal collector system. Manifold sets may include actuators, balancing valves, flow rate indicators, pressure test assembly and other related accessories. Check and balance flow rates as needed. Verify that the manifold is mounted properly, located in an easily accessible location, and fasteners are tight.

2.2 FIELD SEAM METAL ROOF PANELS

Supply all material, labor, and equipment to complete:

a. Installation of standing seam metal roofing Pans' Support Structure

b. Preparation of Standing Seam Metal Roofing Pans for application of Photovoltaic "peal and apply" Laminates as described in paragraph PHOTOVOLTAIC POWER SYSTEM.

c. Application of Standing Seam Metal Roofing Pans and special roofing trim (as needed) to Support Structure, and over the Building Integrated Solar Thermal System as described in paragraph SOLAR THERMAL COLLECTING SYSTEM.

2.2.1 Structural Roofing Panel System

a. Mechanically Seamed Panels:

(1) Profile: 50.8 mm 2 inch standing seam, heavy duty interlock clips.

(a) Width: 406 mm 16 inches.

(b) Double-lock (180 degree seam).

(c) Wind Uplift Resistance: UL 580; Class 90.

(d) Hydrostatic-Head Resistance: No water penetration when tested in accordance with ASTM E 2140.

(e) Air leakage: Passed when tested in accordance with ASTM E 1680.

(f) Water Penetration: None when tested in accordance with ASTM E 1646.

(g) Flame Spread: Class 1 when tested in accordance with ASTM E 84.

(h) Uniform Static Air Pressure Difference: ASTM E 1592. Design Criteria 130 MPH winds computed in accordance with ASCE/SEI 7-05.

(i) Uniform Static Air Pressure Difference: ASTM E 330.

(j) FM Tested: Class 4471 wind uplift testing with a minimum rating of FM I-90.

(k) Class A Fire Rating, UL 790.

(l) Florida Building Code approval.

2.2.2 Materials

a. Galvalume: ASTM A 792/A 792M, AZ 50, aluminum-zinc alloy coating.

(1) Base Metal: Structural quality, 50 ksi yield point, 52 ksi tensile strength.

(2) Thickness: 24 gauge.

(3) Finish: Fluorocarbon Kynar 500/Hylar 5000 coating, nominal 1.0 mil thickness comprised of 0.020 to 0.023 mm 0.8 to 0.9 mil fluorocarbon full strength 70 percent Kynar 500 finish coating over 0.005 to 0.007 mm 0.2 to 0.3 mil urethane primer. Specular Gloss shall be 25-40 percent when held measured at a 60 degree angle. Coatings shall be "cool colors" or Ultra-Cool for energy efficiency.

2.2.3 Underlayment Materials

a. Rubberized Asphalt Strips: Rubberized asphalt bonded to sheet polyethylene, 1 mm 40 mil total thickness, with strippable treated release paper.

(1) Physical Properties:

(a) Load strain properties at 25 degrees C 77 degrees F: maximum load (lbs/inch) MD/XD: 64/88. Elongation at maximum load (%) MD/XD: 52/24.

(b) Low Temperature Flexibility, ASTM D 1970: -30 degree C -22 degree F.

(c) Peel Resistance on plywood, ASTM D 903: 17 kg/m 11.4lb/ft.

(d) Maximum Service Temperature: 116 degree C 240 degree F.

(e) Water Vapor Permeance, ASTM E 96/E 96M, perm Pa*s*m^2: 0.92 0.017

(f) Air Permeability, ASTM E 283, L/sec*m^2: 75 Pa <0.007

(g) Miami Dade Approved.

2.3 PHOTOVOLTAIC POWER SYSTEM

Photovoltaic modules shall be certified to meet UL 1703. All inverters shall be certified as meeting the requirements of UL 1741.

The manufacturer of photovoltaic panels shall have a minimum of 10 years of successful experience continuously manufacturing solar electric panels of the type specified herein.

Building Integrated Photovoltaic Generating System: The complete BIPV-T system shall be designed and supplied by the BIPV-T manufacturer for compatible integration of system components and for optimum system performance.

a. Photovoltaic Modules:

b. The PV laminates shall be lightweight and flexible with an adhesive, factory applied to back for direct installation on flat standing seam metal pans. the PV laminates must be designed to fit securely within the metal roofing pans without penetrating roofing material. The photovoltaic laminates shall have a high tolerance for shading from obstructions and debris. **This specification is written with the United Solar Ovonic, LLC as the basis of acceptable performance and appearance.** Like products of other manufacturers may be approved providing that they meet the entire requirement specified herein. Contractors are encouraged to submit both specified product and alternatives.

c. Balance of System Components:

(1) Inverter:

(a) The inverter shall be sized to accommodate the PV system layout. The inverter shall have at a minimum the following features: IEEE, UL 1741, IEEE 519, NFPA 70; Peak efficiency not less than 95% and NEMA 4 enclosure.

(b) PV module manufacturer as part of system without substitutions shall provide inverter.

(c) The inverter system will convert the DC power from the photovoltaic arrays to commercial AC power. The inverter is sized to match the capacity of the photovoltaic array and deliver the maximum energy to the load (grid).

(2) Isolation Transformer:

(a) Provide a power-conditioning transformer either with or within the inverter to complete the balance of system. The isolation transformer will be selected to match the maximum output of the system inverter.

(3) Combiner/J-Box:

(a) Provide hinged cover fiberglass or metal NEMA 4X enclosure unit that is sunlight resistant, and exhibits excellent chemical, temperature, and weather resistance properties.

(4) Disconnect Switch:

(a) Provide direct current (DC) disconnect switch to isolate system from inverter/transformer. The disconnect switch must be UL Listed with a main disconnect with fused switch to handle the inputs as specified by PV manufacturer.

2.4 PAINTING AND FINISHING

Equipment and component items, when fabricated from ferrous metal and located inside the building, shall be factory finished with the manufacturer's standard finish.

PART 3 EXECUTION

3.1 EXAMINATION

After becoming thoroughly familiar with all details of the work, verify all dimensions in the field, and advise the Contracting Officer of any discrepancy before performing any work.

3.2 SOLAR COLLECTOR INSTALLATION

3.2.1 Collector Subsystem

Collectors, tanks, pumps, valves, heat exchangers, piping, hoses and other components shall be capable of operating within design pressure and temperature ranges and withstanding environmental extremes anticipated in actual service without significantly reducing system design life. A rating for 82° C 180° F at 690 kPa 100 psi should be sufficient for all components located beneath the roof collector area.

3.2.1.1 Collector Array

Solar collector array shall be installed in accordance to the manufacturer's specifications. For mounting on pitched roofs, back of collectors shall be installed at 25 mm 1 inches above roof surface. Each solar collector shall be removable for maintenance, repair, or replacement. Solar collector array shall not impose additional loads on the structure beyond the loads scheduled on the structural drawings.

3.2.1.2 Array Piping

Collector array piping shall be installed in a reverse-return configuration so that path lengths of collector supply and return are of approximately equal length. All piping must be coded with fluid type and flow direction labels in accordance with Section 09 90 00 PAINTS AND COATINGS.

3.2.1.3 Array Support

Array support shall be provided by a pre-engineered sub purlin system on a properly prepared metal roof and installed in accordance with the recommendations of the collector manufacturer.

3.2.2 Storage Subsystem

Solar storage tank penetrations shall be installed as shown on the drawings so that cold water inlet to storage tank and outlet from storage tank to collector array are located near the bottom of the tank, and inlet from collector array and outlet to load are located near the top of the tank.

3.2.3 Transport Subsystem

3.2.3.1 Flow Rates

Flowmeters will be used for displaying and setting flow rate. System flow rate shall be based on recommended collector flow rate, and shall be as indicated. All flow rates shall be below 1.5 meters/second 5 feet/second.

3.2.3.2 Pumps

Pumps shall be installed on foundations, leveled, grouted, and realigned

before operation in accordance with solar energy collecting system manufacturer instructions. Additional pipe supports shall be provided as indicated. Drain line sizes from the pumps shall not be less than the drain trap or the pump dirt pocket, but in no case shall the drain line be less than 13 mm 1/2 inch iron pipe size. Drain lines shall terminate to spill over the nearest floor or open sight drain.

3.2.3.3 Expansion Tank

Expansion tank shall be installed on suction side of pump as shown.

3.2.3.4 Piping, Valves, and Accessories

Piping shall be installed in accordance with Section 22 00 00 PLUMBING, GENERAL PURPOSE, except where noted otherwise. Solders used on piping shall be as shown. Piping shall be coded with fluid type and flow direction labels in accordance with Section 09 90 00 PAINTS AND COATINGS. When a food-grade uninhibited propylene-glycol solution is used to heat potable service water, tamper resistant seals must be attached to all fill ports. All propylene-glycol circuits must be labeled "CONTAINS UNINHIBITED FOOD-GRADE PROPYLENE-GLYCOL: INTRODUCTION OF ANY NONAPPROVED FLUID MAY CONSTITUTE A HEALTH HAZARD." All tamper resistant seals must carry the name of the registered engineer or licensed plumber who certifies that only a 50 percent food-grade uninhibited propylene-glycol and water solution has been installed in the system. Air vents shall be installed at the high points of the collector array and in the equipment room.

3.2.3.5 Pipe Expansion

Expansion of supply and return pipes shall be provided for by changes in the direction of the run of pipe or by expansion loops as indicated. Expansion loops shall provide adequate expansion of the main straight runs of the system within the stress limits specified in ASME B31.1. Pipe guides shall be provided as indicated. Expansion joints shall not be used in system piping.

3.2.3.6 Valves

Valves shall be installed at the locations indicated and where required for the proper functioning of the system. Valves shall be installed with their stems horizontal or above. Ball valves shall be installed in flow and return in combination with check valves to prevent gravity and thermo circulation. Safety relief valves will be used to prevent over pressure.

3.2.3.7 Foundations

Concrete foundations or pads for storage tanks, heat exchangers, pumps, and other equipment covered by this specification shall be constructed in accordance with manufacturer's recommendations and be a minimum of 150 mm 6 inches high with chamfered edges.

3.2.4 Control Subsystem

3.2.4.1 Differential Temperature Controller

Automatic control equipment shall be installed at the location shown in accordance with the solar energy collecting system manufacturer instructions. Control wiring and sensor wiring shall be installed in conduit. Unless otherwise indicated, operators, controllers, sensors,

indicators, and like devices when installed on equipment casings and pipe lines shall be provided with stand-off mounting brackets, bases, nipples, adapters, or extended tubes to provide clearance, not less than the thickness of the insulation, between the surface and the device. These stand-off mounting items shall be integral with the devices or standard accessories of the controls manufacturer unless otherwise approved. Clamp-on devices or instruments where direct contact with pipe surface is required shall be exempted from the use of the above mounting items. All control wiring shall be color coded and identified with permanent numeric or alphabetic codes.

3.2.4.2 Sequence of Operation

The differential temperature controller sensing temperature difference between the fluid in a solar collector and water in the storage tank shall start and stop solar collector loop and storage loop pumps when the temperature differential (Delta T - ON) rises above manufacturer temperature specified.

3.3 FIELD SEAM METAL ROOF PANELS

3.3.1 Examination

Examine surfaces to receive sheet metal roofing. Notify the Architect in writing of any defective conditions encountered. Starting of work shall constitute acceptance of such conditions.

Metal Deck Substrate:

a. Inspect roof deck to verify deck is clean and smooth, free of depressions, waves, or projections, and properly sloped.

b. Verify deck is dry and joints are solidly supported and fastened.

c. Verify wood nailers are installed and correctly located.

Structural Framing Substrate:

a. Verify primary and secondary framing members are installed and fastened, properly aligned and sloped.

b. Verify damaged shop coatings are repaired with touch up paint.

Verify roof openings, curbs, pipes, sleeves, ducts, or vents through roof are solidly set, reglets are in place, and nailing strips located. Ensure that adequate clearance for the PV panel wiring is provided at the ridge cap.

Correct defective conditions before beginning work.

3.3.2 Installation

Install in conformance with the NRCA Roofing and Waterproofing Manual and manufacturers installation instructions and recommendations. Form panel shape as indicated on drawings, accurate in size, square, and free from distortion or defects. Install underlayment as recommended by the manufacturer. Install all panels continuous from ridge to eave. Transverse seams are not permitted. All panels in excess of 189 mm 40 feet shall be site formed. Where not otherwise indicated conform to SMACNA

details including flashing and trim. Install sealants where indicated to clean, dry surfaces only without skips or voids.

3.3.3 Protection

Protect installed products until completion of project. Touch-up, repair or replace damaged products before Substantial Completion.

3.4 PHOTOVOLTAIC POWER SYSTEM

3.4.1 Preparation

Install complete electric connections, and similar items, as recommended by the equipment manufacturer and as required for proper operations according to these specifications and the drawings.

3.4.2 Installation

Install in accordance with manufacturer's instructions, and NFPA 70 standards.

Install photovoltaic laminates over flat metal roofing panels as shown on the drawings.

3.4.3 System Check-Out and Test

Provide the service of the manufacturer's trained certifier who shall visit the job site and verify the following:

a. Component Level: Check voltages and polarities at selected locations. Array strings are checked at the last module of the string. Combiner boxes, main array junction boxes; inverter and transformer are checked for physical damage.

b. Array Level: Check voltages, polarities and short circuit currents at combiner boxes. Module wiring is inspected and module output is tested at the combiner box. The combiner box is checked to ensure that it is mounted properly and fasteners are tight. Check voltages, polarities and short circuit currents at main combiner boxes. Check that inverter input voltage levels and polarities are correct. Sub-array wiring is inspected and sub-array output (V_{OC} and polarity) is tested at the main array junction boxes. Main array junction boxes are checked to ensure that they are mounted properly and fasteners are tight. Test balance of system housing ventilation systems.

c. Electrical Inspection and Approval: using a post-installation checklist and the maintenance checklist included in the Operations and Maintenance Manual, the entire system is physically inspected and electrically tested.

3.5 INSPECTION AND TESTING

3.5.1 Inspection

Make system available for inspection at all times.

3.5.2 Testing Prior to Concealment

3.5.2.1 Hydrostatic Test

Demonstrate to Contracting Officer that all piping has been hydrostatically tested, at a pressure of indicated by solar energy collecting system manufacturer for a period of time sufficient for inspection of every joint in the system and in no case less than 2 hours, prior to installation of insulation. Expansion tank and relief valves shall be isolated from test pressure. No loss of pressure shall be allowed. Leaks found during tests shall be repaired by replacing pipe or fittings and the system retested. Caulking of joints shall not be permitted.

3.5.2.2 Cleaning of Piping

System piping shall be flushed with clean, fresh water prior to concealment of any individual section and prior to final operating tests. Prior to flushing piping, relief valves shall be isolated or removed. Solar collectors shall be covered to prevent heating of cleaning fluid, unless cleaning is performed during hours of darkness. The solution shall be circulated through the section to be cleaned at the design flow rate for a minimum of 2 hours.

3.5.3 Posting Framed Instructions

Framed instructions under glass or in laminated plastic shall be posted where directed. These instructions shall include a system schematic, and wiring and control diagrams showing the complete layout of the entire system. Condensed operating instructions explaining preventative maintenance procedures, balanced flow rates, methods of checking the system for normal safe operation, and procedures for safely starting and stopping the system shall be prepared in typed form, framed as specified above, and posted beside the diagrams. Proposed diagrams, instructions, and other sheets shall be submitted for approval prior to posting. The framed instructions shall be posted before acceptance testing of the system.

3.5.4 Acceptance Testing and Final Inspection

Notify the Contracting Officer 7 calendar days before the performance and acceptance tests are to be conducted. Tests shall be performed in the presence of the Contracting Officer. Furnish all instruments and personnel required for the tests. Electricity and water will be furnished by the Government. A written record of the results of all acceptance tests shall be maintained, to be submitted in booklet form. The tests shall be as follows:

3.5.4.1 As-Built Drawings

Provide as a condition of final acceptance a complete set of as-built system drawings. Drawings shall clearly indicate the actual condition of the installed solar energy system at the time of the final test.

3.5.4.2 Final Hydrostatic Test

Demonstrate to Contracting Officer that all piping has been hydrostatically tested at a pressure indicated by manufacturer for a period of time sufficient for inspection of every joint in the system and in no case less than 2 hours. Expansion tank and relief valves shall be isolated from test pressure. Gauges used in the test shall have been calibrated within the

6-month period preceding the test. Test shall be witnessed by Contracting Officer. No loss of pressure shall be allowed. Leaks found during tests shall be repaired by replacing pipe or fittings and the system retested. Caulking of joints shall not be permitted.

3.5.4.3 System Flushing

For the final inspection, the system shall be thoroughly flushed, in no case for less than 2 hours, of all foreign matter until a white linen bag installed in a strainer basket shows no evidence of contamination. The white linen bag shall be in the strainer basket during the entire flushing operation prior to its being presented to the Contracting Officer for approval. The Contracting Officer will inspect the linen bag prior to completion of flushing and approve the flushing operation. System shall be drained prior to final filling.

3.5.4.4 System Filling

System shall be filled through indicated connections with propylene-glycol solution. Solution shall be mixed externally to the solar system and consist of 50 percent propylene-glycol and 50 percent distilled water by volume. Air shall be vented from the system after filling. System pressure at the high point on the roof shall be as indicated by solar energy collecting system manufacturer.

3.5.4.5 Operational Test

Operational test shall occur over a period of 48 consecutive hours with sufficient solar isolation to cause activation of the solar energy system during daylight hours. With system fully charged so that pressure at the high point on the roof or the lowest system pressure set by manufacturer and with fluid and pumps energized, flowmeter must indicate flow. Calibrated balancing valves with pressure taps shall indicate bank flow rate as shown.

3.5.4.6 Control Logic

By substituting variable resistors for collector and storage tank temperature sensors, demonstrate the differential temperature controller correctly energizes the system pumps when the collector sensor indicates a temperature indicated on the controller display panel. The differential temperature controller shall de-energize the system pumps when the displayed temperature of the solar collectors reaches the displayed temperature of the storage tank.

3.5.4.7 Temperature Sensor Diagnostics

Demonstrate that the controller will correctly identify open and short circuits on both the solar collector temperature sensor circuit and the storage tank sensor circuit.

3.5.4.8 Overall System Operations

Demonstrate that the solar energy system will operate properly while unattended for a period of at least 72 hours and that the controller will start pumps after being warmed by the sun, and that it will properly shut down during cloudy weather or in the evening over a minimum of three complete cycles. Contractor is permitted to manipulate the temperature of the storage tank by the introduction of cold water at local groundwater

temperature.

3.6 FIELD TRAINING

Provide a field training course for designated operating and maintenance staff members. Training shall be provided in accordance with solar energy collecting system manufacturer's requirements and shall start after the system is functionally complete but prior to final acceptance tests. The training shall include discussion of the system design and layout and demonstrations of routine operation and maintenance data and procedures. This training shall include: normal system operation and control; flow balancing; detection of a nonfunctioning system due to sensor, controller, and/or mechanical failure; filling, draining, and venting of the collector array; replacement of sensors, collectors, and collector components; collector cleaning and inspection for leaks; and heat exchanger cleaning and expansion tank charging if applicable.

-- End of Section --

SECTION 22 14 00.00 22

RAINWATER HARVESTING
08/10

PART 1 GENERAL

1.1 REFERENCES

The publications listed below form a part of this specification to the extent referenced. The publications are referred to within the text by the basic designation only.

AMERICAN SOCIETY OF HEATING, REFRIGERATING AND AIR-CONDITIONING ENGINEERS (ASHRAE)

ASHRAE 90.1 - IP	(2007; Supplement 2008; Addenda r 2009) Energy Standard for Buildings Except Low-Rise Residential Buildings
ASHRAE 90.1 - SI	(2007; Supplement 2008; Errata 2009; Errata 2009; INT 1-3 2009) Energy Standard for Buildings Except Low-Rise Residential Buildings

AMERICAN SOCIETY OF SANITARY ENGINEERING (ASSE)

ASSE 1001	(2008) Performance Requirements for Atmospheric Type Vacuum Breakers (ANSI approved 2009)
ASSE 1003	(2009) Performance Requirements for Water Pressure Reducing Valves for Domestic Water Distribution Systems - (ANSI approved 2010)
ASSE 1011	(2004; Errata 2004) Performance Requirements for Hose Connection Vacuum Breakers (ANSI approved 2004)
ASSE 1012	(2009) Performance Requirements for Backflow Preventer with an Intermediate Atmospheric Vent - (ANSI approved 2009)
ASSE 1013	(2009) Performance Requirements for Reduced Pressure Principle Backflow Preventers and Reduced Pressure Fire Protection Principle Backflow Preventers - (ANSI approved 2010)
ASSE 1020	(2004; Errata 2004; Errata 2004) Performance Requirements for Pressure Vacuum Breaker Assembly (ANSI Approved 2004)

AMERICAN WATER WORKS ASSOCIATION (AWWA)

AWWA 10084	(2005) Standard Methods for the

	Examination of Water and Wastewater
AWWA B300	(1999; R 2004) Hypochlorites
AWWA B301	(1999; R 2004) Liquid Chlorine
AWWA C203	(2008) Coal-Tar Protective Coatings and Linings for Steel Water Pipelines - Enamel and Tape - Hot-Applied
AWWA C651	(2005; Errata 2005) Standard for Disinfecting Water Mains
AWWA C652	(2002) Disinfection of Water-Storage Facilities
AWWA C700	(2009) Standard for Cold Water Meters - Displacement Type, Bronze Main Case
AWWA C701	(2007) Standard for Cold-Water Meters - Turbine Type for Customer Service

ASME INTERNATIONAL (ASME)

ASME A112.1.2	(2004) Standard for Air Gaps in Plumbing Systems (For Plumbing Fixtures and Water-Connected Receptors)
ASME B1.20.1	(1983; R 2006) Pipe Threads, General Purpose (Inch)
ASME B40.100	(2005) Pressure Gauges and Gauge Attachments
ASME BPVC	(2007) Boiler and Pressure Vessels Code

ASTM INTERNATIONAL (ASTM)

ASTM B 117	(2009) Standing Practice for Operating Salt Spray (Fog) Apparatus
ASTM B 370	(2009) Standard Specification for Copper Sheet and Strip for Building Construction
ASTM C 920	(2008) Standard Specification for Elastomeric Joint Sealants
ASTM D 2822	(2005) Asphalt Roof Cement
ASTM E 1	(2007) Standard Specification for ASTM Liquid-in-Glass Thermometers
ASTM E 2129	(2005) Standard Practice for Data Collection for Sustainability Assessment of Building Products

CSA AMERICA, INC. (CSA/AM)

CSA/AM Z21.22	(1999; Addenda A 2000, Addenda B 2001; R

2004) Relief Valves for Hot Water Supply Systems

FOUNDATION FOR CROSS-CONNECTION CONTROL AND HYDRAULIC RESEARCH (FCCCHR)

FCCCHR Manual (1988e9) Manual of Cross-Connection Control

INTERNATIONAL CODE COUNCIL (ICC)

ICC IPC (2009) International Plumbing Code

MANUFACTURERS STANDARDIZATION SOCIETY OF THE VALVE AND FITTINGS INDUSTRY (MSS)

MSS SP-110 (1996) Ball Valves Threaded, Socket-Welding, Solder Joint, Grooved and Flared Ends

MSS SP-58 (2009) Pipe Hangers and Supports - Materials, Design and Manufacture, Selection, Application, and Installation

MSS SP-69 (2003) Pipe Hangers and Supports - Selection and Application (ANSI Approved American National Standard)

MSS SP-73 (2003) Brazing Joints for Copper and Copper Alloy Pressure Fittings

MSS SP-80 (2008) Bronze Gate, Globe, Angle and Check Valves

NATIONAL ELECTRICAL MANUFACTURERS ASSOCIATION (NEMA)

NEMA 250 (2008) Enclosures for Electrical Equipment (1000 Volts Maximum)

NEMA MG 1 (2009) Motors and Generators

NEMA MG 11 (1977; R 1997; R 2001; R 2007) Energy Management Guide for Selection and Use of Single Phase Motors

NATIONAL FIRE PROTECTION ASSOCIATION (NFPA)

NFPA 90A (2009; Errata 09-1) Standard for the Installation of Air Conditioning and Ventilating Systems

NSF INTERNATIONAL (NSF)

NSF/ANSI 61 (2009) Drinking Water System Components - Health Effects

PLASTIC PIPE AND FITTINGS ASSOCIATION (PPFA)

PPFA-01 (2004) Firestopping: Plastic Pipe in Fire Resistive Construction

SOCIETY OF AUTOMOTIVE ENGINEERS INTERNATIONAL (SAE)

SAE J1508	(2009) Hose Clamp Specifications

U.S. ENVIRONMENTAL PROTECTION AGENCY (EPA)

Energy Star	(1992; R 2006) Energy Star Energy Efficiency Labeling System

U.S. GREEN BUILDING COUNCIL (USGBC)

LEED	(2002; R 2005) Leadership in Energy and Environmental Design(tm) Green Building Rating System for New Construction (LEED-NC)

U.S. NATIONAL ARCHIVES AND RECORDS ADMINISTRATION (NARA)

40 CFR 50.12	National Primary and Secondary Ambient Air Quality Standards for Lead
PL 109-58	Energy Policy Act of 2005 (EPAct05)

1.2 SUBMITTALS

Government approval is required for submittals with a "G" designation; submittals not having a "G" designation are for [Contractor Quality Control Approval.][information only.] The following shall be submitted in accordance with Section [01 33 00 SUBMITTAL PROCEDURES][01 33 00.05 20 CONSTRUCTION SUBMITTAL PROCEDURES]:

[SD-02 Shop Drawings

Rainwater harvesting System; G

Detail drawings consisting of schedules, performance charts, instructions, diagrams, and other information to illustrate the requirements and operations of systems that are not covered by the Plumbing Code. Detail drawings for the complete rainwater harvesting system including piping layouts and locations of connections; dimensions for roughing-in, foundation, and support points; schematic diagrams and wiring diagrams or connection and interconnection diagrams. Detail drawings shall indicate clearances required for maintenance and operation. Where piping and equipment are to be supported other than as indicated, details shall include loadings and proposed support methods. Mechanical drawing plans, elevations, views, and details, shall be drawn to scale.]

[Modular Storage Tank; G

Detail drawings showing the size, configuration, and other information to illustrate the requirements and assembly of the storage tank modules and all required accessories. Provide storage tank drawing plans, elevations, views, and details drawn to scale.]

[Fiberglass Reinforced Plastic Storage Tank; G

Detail drawings showing the size, configuration, and other information to illustrate the requirements and assembly of the storage tank modules and all required accessories. Provide storage tank drawing plans, elevations, views, and details drawn to scale.]

SD-03 Product Data

[Local/Regional Materials

Documentation indicating distance between manufacturing facility and the project site. Indicate distance of raw material origin from the project site. Indicate relative dollar value of local/regional materials to total dollar value of products included in project.]

[Environmental Data]

Materials

Documentation indicating percentage of post-industrial and post-consumer recycled content per unit of product. Indicate relative dollar value of recycled content products to total dollar value of products included in project.

Fixtures; (LEED)

List of installed fixtures with manufacturer, model, and flow rate.

Rainwater Control System[; G]

[Modular Storage Tank; G]

[Fiberglass Reinforced Plastic Storage Tank; G]

Submersible Feed Pump[; G]

Debris Filter[; G]

Initial Runoff Filter[; G]

Rainwater Sediment Filters[; G]

Rainwater Ultraviolet Purification System[; G]

[Dye Injection System[; G]]

[Chlorine Injection System[; G]]

[Unpressurized Holding Tank[; G]]

[Booster Pump[; G]]

[Packaged Pump System[; G]]

Hydropneumatic Tank[; G]

Backflow Preventers[; G]

Domestic Water Service Meters[; G]

Vibration-Absorbing Features[; G]

Details of vibration-absorbing features, including arrangement, foundation plan, dimensions and specifications.

Rainwater Harvesting System; G

Diagrams, wiring diagrams for power, signal, and control wiring, dimesnioned outline drawings of equipment and system, instructions, and other sheets proposed for posting. Manufacturer's recommendations for the installation of the rainwater harvesting system including piping, tanks, pumps, and controls.

SD-06 Test Reports

Tests, Flushing and Disinfection

Test reports in booklet form showing all field tests performed to adjust each component and all field tests performed to prove compliance with the specified performance criteria, completion and testing of the installed system. Each test report shall indicate the final position of controls.

Test of Backflow Prevention Assemblies; G.

Certification of proper operation shall be as accomplished in accordance with state regulations by an individual certified by the state to perform such tests. If no state requirement exists, the Contractor shall have the manufacturer's representative test the device, to ensure the unit is properly installed and performing as intended. The Contractor shall provide written documentation of the tests performed and signed by the individual performing the tests.

SD-07 Certificates

Materials and Equipment

Where equipment is specified to conform to requirements of the ASME Boiler and Pressure Vessel Code, the design, fabrication, and installation shall conform to the code.

SD-10 Operation and Maintenance Data

Rainwater Harvesting System; G

Submit in accordance with Section [01 78 23 OPERATION AND MAINTENANCE DATA][01 78 24.05 20 FACILITY OPERATION AND MAINTENANCE SUPPORT INFORMATION].

1.3 STANDARD PRODUCTS

Specified materials and equipment shall be standard products of a manufacturer regularly engaged in the manufacture of such products.

Specified equipment shall essentially duplicate equipment that has performed satisfactorily at least two years prior to bid opening. Standard products shall have been in satisfactory commercial or industrial use for 2 years prior to bid opening. The 2-year use shall include applications of equipment and materials under similar circumstances and of similar size. The product shall have been for sale on the commercial market through advertisements, manufacturers' catalogs, or brochures during the 2 year period. Section 23 03 00.00 20 BASIC MECHANCIAL MATERIALS AND METHODS applies to this section, with additions and modifications specified herein.

1.3.1 Alternative Qualifications

Products having less than a two-year field service record will be acceptable if a certified record of satisfactory field operation for not less than 6000 hours, exclusive of the manufacturer's factory or laboratory tests, can be shown.

1.3.2 Service Support

The equipment items shall be supported by service organizations. Submit a certified list of qualified permanent service organizations for support of the equipment which includes their addresses and qualifications. These service organizations shall be reasonably convenient to the equipment installation and able to render satisfactory service to the equipment on a regular and emergency basis during the warranty period of the contract.

1.3.3 Manufacturer's Nameplate

Each item of equipment shall have a nameplate bearing the manufacturer's name, address, model number, and serial number securely affixed in a conspicuous place; the nameplate of the distributing agent will not be acceptable.

1.3.4 Modification of References

In each of the publications referred to herein, consider the advisory provisions to be mandatory, as though the word, "shall" had been substituted for "should" wherever it appears. Interpret references in these publications to the "authority having jurisdiction", or words of similar meaning, to mean the Contracting Officer.

1.3.4.1 Definitions

For the International Code Council (ICC) Codes referenced in the contract documents, advisory provisions shall be considered mandatory, the word "should" shall be interpreted as "shall." Reference to the "code official" shall be interpreted to mean the "Contracting Officer." For Navy owned property, references to the "owner" shall be interpreted to mean the "Contracting Officer." For leased facilities, references to the "owner" shall be interpreted to mean the "lessor." References to the "permit holder" shall be interpreted to mean the "Contractor."

1.3.4.2 Administrative Interpretations

For ICC Codes referenced in the contract documents, the provisions of Chapter 1, "Administrator," do not apply. These administrative requirements are covered by the applicable Federal Acquisition Regulations (FAR) included in this contract and by the authority granted to the Officer in Charge of Construction to administer the construction of this project.

References in the ICC Codes to sections of Chapter 1, shall be applied appropriately by the Contracting Officer as authorized by his administrative cognizance and the FAR.

1.4 DELIVERY, STORAGE, AND HANDLING

Handle, store, and protect equipment and materials to prevent damage before and during installation in accordance with the manufacturer's recommendations, and as approved by the Contracting Officer. Replace damaged or defective items.

1.5 REGULATORY REQUIREMENTS

Unless otherwise required herein, all work shall be in accordance with ICC IPC. Energy consuming products and systems shall be in accordance with PL 109-58 and ASHRAE 90.1 - SIASHRAE 90.1 - IP. In addition, energy consuming equipment shall have the Energy Star label.

1.6 PROJECT/SITE CONDITIONS

The Contractor shall become familiar with details of the work, verify dimensions in the field, and advise the Contracting Officer of any discrepancy before performing any work.

1.7 INSTRUCTION TO GOVERNMENT PERSONNEL

When specified in other sections, furnish the services of competent instructors to give full instruction to the designated Government personnel in the adjustment, operation, and maintenance, including pertinent safety requirements, of the specified equipment or system. Instructors shall be thoroughly familiar with all parts of the installation and shall be trained in operating theory as well as practical operation and maintenance work.

Instruction shall be given during the first regular work week after the equipment or system has been accepted and turned over to the Government for regular operation. The number of man-days (8 hours per day) of instruction furnished shall be as specified in the individual section. When more than 4 man-days of instruction are specified, use approximately half of the time for classroom instruction. Use other time for instruction with the equipment or system.

When significant changes or modifications in the equipment or system are made under the terms of the contract, provide additional instruction to acquaint the operating personnel with the changes or modifications.

1.8 ACCESSIBILITY OF EQUIPMENT

Install all work so that parts requiring periodic inspection, operation, maintenance, and repair are readily accessible. Install concealed valves, expansion joints, controls, dampers, and equipment requiring access, in locations freely accessible through access doors.

1.9 SUSTAINABLE DESIGN REQUIREMENTS

1.9.1 Local/Regional Materials

Use materials or products extracted, harvested, or recovered, as well as manufactured, within a [500][_____] mile [800][_____] kilometer radius from the project site, if available from a minimum of three sources.

1.9.2 Environmental Data

[Submit Table 1 of ASTM E 2129 for the following products: [_____].]

1.9.3 Rainwater Harvesting System

Provide a sustainable design technique of rainwater harvesting. To achieve Low Impact Development (LID) and LEED credit(s), provide a complete rainwater harvesting and management system complete ready for use. The system shall be complete and shall serve plumbing fixtures within the facility in accordance with LEED guidance. The system shall collect, treat, store, and distribute rainwater as "non-potable water" in sufficient capacity to achieve the corresponding water efficiency reduction for LEED credit(s). The system shall be provided in accordance with the most stringent requirements from the applicable government criteria, including the requirements/recommendations of the following:

o EPA Manual "EPA/625/R-04/108 September 2004, Guidelines for Water Reuse" Web link is http://www.epa.gov/nrmrl/pubs/625r04108/625r04108.pdf

o NCDENR Technical Guidance Stormwater Treatment Credit for Rainwater Harvesting Systems, web link is http://h2o.enr.state.nc.us/su/documents/RainwaterHarvesting_Approved.pdf

o The Texas Manual on Rainwater Harvesting, latest edition, web link is www.twdb.state.tx.us/publications/reports/RainwaterHarvestingManual_3rdedition.pdf

North Carolina Rules Regarding Water Reuse, See North Carolina ADMINISTRATIVE CODE Effective April 1, 2001. Pages 31 - 36 of 44. See also ENR-ENVIRONMENTAL MANAGEMENT COMMISSION T15A: 02H .0200.

All of the water closets, urinals[,_____], and hose bibbs shall be served by non-potable water. To distinguish non-potable water from potable water, the non-potable water shall be [dyed with a purple color (Pantone 522) and]embossed or integrally stamped or painted "CAUTION: RECLAIMED WATER - DO NOT DRINK". Provide this notice at all hose bibbs connected to the rainwater harvesting system. The non-potable water piping system shall have its own particular identification color and pipe ID code/name. The identification color shall be in accordance with local codes. The non-potable water system shall have a potable water back-up for supplement during dry spells. Provide potable water back-up via air gap or reduced pressure back-flow preventer and a pressure reducing station with level controls in accordance with the plumbing codes, NC building code, NCDENR requirements, North Carolina Administrative Code, and EPA requirements.[Provide drainage of cooled condensate to rainwater collection system.]

PART 2 PRODUCTS

2.1 MATERIALS

The requirements for pressure piping and fittings are specified in Section 22 00 00 PLUMBING, GENERAL PURPOSE. Material or equipment containing lead shall not be used in the rainwater harvesting system. Rainwater collection piping located outside the building shall be as specified in Section 33 40 00 STORM DRAINAGE UTILITIES.

2.1.1 Miscellaneous Materials

Miscellaneous materials shall conform to the following:

a. Copper, Sheet and Strip for Building Construction: ASTM B 370.

b. Asphalt Roof Cement: ASTM D 2822.

c. Hose Clamps: SAE J1508.

d. Hypochlorites: AWWA B300.

e. Liquid Chlorine: AWWA B301.

f. Gauges - Pressure and Vacuum Indicating Dial Type - Elastic Element: ASME B40.100.

g. Thermometers: ASTM E 1. Mercury shall not be used in thermometers.

2.1.2 Pipe Insulation Material

Insulation shall be as specified in Section [23 07 00 THERMAL INSULATION FOR MECHANICAL SYSTEMS][23 07 00.00 22 MECHANICAL INSULATION].

2.2 PIPE HANGERS, INSERTS, AND SUPPORTS

Pipe hangers, inserts, and supports shall conform to MSS SP-58 and MSS SP-69.

2.3 VALVES

Valves shall be provided on supplies to equipment. Except as specified herein, valves are specified in Section 22 00 00 PLUMBING, GENERAL PURPOSE. Pressure ratings shall be based upon the application. Valves shall conform to the following standards:

Description	Standard
Ball Valves Threaded, Socket-Welding, Solder Joint Ends	MSS SP-110
Bronze Gate, Globe, Angle, and Check Valves	MSS SP-80
Vacuum Relief Valves	CSA/AM Z21.22
Water Pressure Reducing Valves	ASSE 1003

2.4 BACKFLOW PREVENTERS

Backflow preventers shall be approved and listed by the Foundation For Cross-Connection Control & Hydraulic Research. Provide reduced pressure principle type assembly backflow preventers on each in-coming potable service water line to the rain water harvesting system. In addition, provide backflow preventers in accordance to the North Carolina Building Code and the Water Supply permit. All backflow preventers shall be accessible. Reduced pressure principle assemblies, double check valve assemblies, atmospheric (nonpressure) type vacuum breakers, and pressure type vacuum breakers shall be tested, approved, and listed in accordance with FCCCHR Manual. Backflow preventers with intermediate atmospheric vent

shall conform to ASSE 1012. Reduced pressure principle backflow preventers shall conform to ASSE 1013. Hose connection vacuum breakers shall conform to ASSE 1011. Pipe applied atmospheric type vacuum breakers shall conform to ASSE 1001. Pressure vacuum breaker assembly shall conform to ASSE 1020. Air gaps in plumbing systems shall conform to ASME A112.1.2.

2.5 RAINWATER HARVESTING SYSTEM

Provide the rainwater harvesting system complete with all components necessary to provide a complete system to collect, store, and process rainwater for use in situ; including water treatment as appropriate to intended service. System shall include the following items:

2.5.1 Rainwater Control System

Provide a rainwater control system capable of monitoring and controlling the entire rainwater harvesting system. The system shall be able to monitor the water level in the cistern storage tank, the status of the filters, and the purification system. The system shall control the cistern pump and the bypass connection to the potable water supply to ensure a continuous water supply to the building fixtures connected to the system.

2.5.2 Modular Storage Tank

Storage tank shall be composed of interlocking modular sections arranged in the configuration shown on the civil drawings. The modules shall be assembled from injection molded plastic top, bottom, and side panels of the manufacturers standard size. The top and bottom panels shall be connected by either extruded rigid PVC columns or internal baffles. The tank structure shall be capable of withstanding HS-20 surface loads as defined by AASHTO. Provide inspection ports, inlets, outlet, and overflow connections as shown on the Plumbing and Civil drawings. Tank shall be vented to atmospheric pressure.

2.5.3 Fiberglass Reinforced Plastic Storage Tank

Storage tank shall be fiber glass reinforced plastic (FRP) Underground Storage tank. Provide a polyester resin chemical rated coating on the tank (interior and exterior). Tanks shall be capable of handling internal pressure loads of 5 psig pressure with a 5:1 safey ratio. The tank size shall be as indicated on the Plumbing and Civil drawings. Tank shall be leaked test in the factory at 5 psig. The tank shall be capable of withstanding a vacuum test to 11.5 inches of mercury. The tank shall be capable of withstanding surface loads from H-20 axle loads. The tank shall be capable of handling external hyrdostatic pressure loads from being buried in the ground up to seven feet overburden with a safety factor of 5:1 against general buckling. Tank shall be designed, rated, and ASME BPVC code stamped. The tank and all components, and accessories shall be manufactured with materials conforming to the requirements of NSF standard 61

Provide the tank with a vent to the atmosphere. The tank shall be manufacturered with 100% resin and glass fiber reinforcement. Provide FRP anchor straps. Provide as recommended and specified by the tank manufacturer all the required types and number of anchors, strap locations, strap sizes, and number of straps.

With the tank provide the following FRP accessories with all necessary supports: Internal pump platforms, drop and fill downcomer tubes,

submersible pumps[and ladders], flanged manways[(minimum of two)], Manway extensions, and covers.

2.5.4 Submersible Feed Pump

Provide a subermisible pump for the rainwater storage tank. The pump shall be capable of providing the flow quantities at the conditions indicated on the drawings. Pump motor shall be the high efficiency type. The pump shall be rated for potable water and shall have the required certifications and shall be NSF listed for the service intended. Provide the pump with a floating type extractor with screen and a float type level control to shut down the pump when tank level is below safe level for pump operation.

2.5.5 Debris Filter

Provide a self cleaning type debris filter to remove trash before rainwater is delivered to the storage tank. The filter is to be provided as a self contained unit with inlet, outlet, and overflow pipe connections, and removable stainless steel 0.35 mm mesh[basket] strainer. Provide an adjustable dome shaft with pedestrian load rated cover. Provide the cover with a child proof closure.

2.5.6 Initial Runoff Filter (Water Diverter)

Provide an initial runoff filter (water diverter) to remove water borne contaminants. The filter shall consist of a horizontal underground chamber sized as indicated on the Plumbing drawings, to hold the initial water runoff from the roof. Provide a floating ball at the filter inlet to divert water to the storage tank once the chamber of the initial runoff filter is full. At the outlet end of the filter provide an adjustable orifice that slowly allows the water in the chamber to drain out over time. The orifice shall be removable for servicing.

2.5.7 Rainwater Sediment Filters

Provide 50 and 10 micron sediment filters, and a 10 micron carbon filter sized for the service intended and located as shown on the drawings. The filters shall have removable filter housings with replaceable cartridge type filters and shall be NSF listed for the service intended.

2.5.8 Rainwater Ultraviolet Purification System

Provide a ultraviolet water purifier sized for the service intended and located as shown on the drawings. The unit shall be NSF listed for the service intended.

[2.5.9 Dye Injection System

Add description here.

][2.5.10 Chlorine Injection System

Add description here.

][2.5.11 Unpressurized holding Tank

Add description here.

][2.5.12 Booster Pump

Pumps shall be electrically driven, single-stage, centrifugal, with mechanical seals, suitable for the intended service. Pump and motor shall be[integrally mounted on a cast-iron or steel subbase,][close-coupled with an overhung impeller,][and][supported by the piping on which it is installed]. The shaft shall be one-piece, heat-treated, corrosion-resisting steel with impeller and smooth-surfaced housing of bronze. The pump shall be UL listed, rated for potable water, shall have the required certifications, and shall be NSF listed for the service intended and meet the requirements of NSF/ANSI 61. The pumps shall be selected for maximum energy efficiency.

Motor shall be high efficiency type and totally enclosed, fan-cooled and shall have sufficient wattage horsepower for the service required. Each pump motor shall be equipped with an across-the-line magnetic controller in a NEMA 250, Type 1 enclosure with "START-STOP" switch in cover.

Integral size motors shall be premium efficiency type in accordance with NEMA MG 1. Pump motors smaller than 746 W 1 hp Fractional horsepower pump motors shall have integral thermal overload protection in accordance with Section 26 20 00 INTERIOR DISTRIBUTION SYSTEM. Guards shall shield exposed moving parts.

][2.5.13 Packaged Pump System

The package pump system for the rainwater harvesting shall be a dual vertical multistage pump system with variable frequency drives (VFD), electronic controller to maintain a constant discharge pressure, pump control valves, and pressure reducing valves. The pumps shall be selected for maximum energy efficiency. The electronic controller shall be a programmable controller with keypad and LCD display. Programmable functions shall include but not limited to: Pump status, Standby designation, elasped running hours, system pressure set point, actual system pressure, VFD pump speed percent, VFD pump min and max speed, system faults, pump priority, pump rotation order, friction loss compensation, high and low discharge pressure shut down limits and alarms, low suction pressure shut-down limit and alarm, clock program, DDC control input and output for connection into the DDC system. Pump package shall be UL listed. Components shall be certified with manufacturer certified ratings. All electrical components, devices, and accessories of the pump package shall be listed and labeled as given in NFPA 70. Pump motors shall be high efficiency type and totally enclosed fan cooled. The pump shall be rated for potable water and shall have the required certifications and and shall be NSF listed for the service intended.

]2.5.14 Hydropneumatic Tank

Provide Tank specifically designed for use on potable water systems with 93 degrees C 1034 kPa size and acceptance volume shall be as indicated on the drawings. Construct of steel for minimum working pressure of 862 kPa (gage) 125 psig. Tank shall have polypropylene or butyl lined diaphragm which keeps the air charge separated from the water. Provide ASME code stamped tank in accordance with ASME BPVC.

2.6 DOMESTIC WATER SERVICE METERS

Cold water meters 50 mm 2 inches and smaller shall be positive displacement type conforming to AWWA C700. Cold water meters 64 mm 2-1/2 inches and

larger shall be turbine type conforming to AWWA C701. Meter register may be round or straight reading type, indicating with totalizer. Meter shall be provided with a pulse generator, remote readout register and all necessary wiring and accessories. The water meters shall be connected to the DDC system for remote reading of all water useage. Provide water meters for the make-up water to the rainwater harvesting system and the rainwater supply to the water distribution system in the locations as shown on the Plumbing drawings.

2.7 ELECTRICAL WORK

Provide electrical motor driven equipment specified complete with motors, motor starters, and controls as specified herein and in Section 26 20 00 INTERIOR DISTRIBUTION SYSTEM. Provide internal wiring for components of packaged equipment as an integral part of the equipment. Provide[high efficiency type,] single-phase, fractional-horsepower alternating-current motors, including motors that are part of a system, corresponding to the applications in accordance with NEMA MG 11.[In addition to the requirements of Section 26 20 00 INTERIOR DISTRIBUTION SYSTEM, provide polyphase, squirrel-cage medium induction motors with continuous ratings, including motors that are part of a system, that meet the efficiency ratings for premium efficiency motors in accordance with NEMA MG 1.] Provide motors in accordance with NEMA MG 1 and of sufficient size to drive the load at the specified capacity without exceeding the nameplate rating of the motor.

Motors shall be rated for continuous duty with the enclosure specified. Motor duty requirements shall allow for maximum frequency start-stop operation and minimum encountered interval between start and stop. Motor torque shall be capable of accelerating the connected load within 20 seconds with 80 percent of the rated voltage maintained at motor terminals during one starting period. Motor bearings shall be fitted with grease supply fittings and grease relief to outside of the enclosure.

Controllers and contactors shall have auxiliary contacts for use with the controls provided. Manual or automatic control and protective or signal devices required for the operation specified and any control wiring required for controls and devices specified, but not shown, shall be provided. For packaged equipment, the manufacturer shall provide controllers, including the required monitors and timed restart.

Power wiring and conduit for field installed equipment shall be provided under and conform to the requirements of Section 26 20 00 INTERIOR DISTRIBUTION SYSTEM.

2.8 MISCELLANEOUS PIPING ITEMS

2.8.1 Escutcheon Plates

Provide one piece or split hinge metal plates for piping entering floors, walls, and ceilings in exposed spaces. Provide chromium-plated on copper alloy plates or polished stainless steel finish in finished spaces. Provide paint finish on plates in unfinished spaces.

2.8.2 Pipe Sleeves

Provide where piping passes entirely through walls, ceilings, roofs, and floors.

2.8.2.1 Sleeves in Masonry and Concrete

Provide schedule 40 steel or PVC plastic pipe sleeves. Core drilling of masonry and concrete may be provided in lieu of pipe sleeves when cavities in the core-drilled hole are completely grouted smooth.

2.8.2.2 Sleeves Not in Masonry and Concrete

Provide 26 gage galvanized steel sheet or PVC plastic pipe sleeves.

2.8.3 Pipe Hangers (Supports)

Provide MSS SP-58 and MSS SP-69, Type 1 with adjustable type steel support rods, except as specified or indicated otherwise. Attach to steel joists with Type 19 or 23 clamps and retaining straps. Attach to Steel W or S beams with Type 21, 28, 29, or 30 clamps. Attach to steel angles and vertical web steel channels with Type 20 clamp with beam clamp channel adapter. Attach to horizontal web steel channel and wood with drilled hole on centerline and double nut and washer. Attach to concrete with Type 18 insert or drilled expansion anchor. Provide Type 40 insulation protection shield for insulated piping.

2.8.4 Nameplates

Provide 3.2 mm 0.125 inch thick melamine laminated plastic nameplates, black matte finish with white center core, for equipment, gages, thermometers, and valves; valves in supplies to faucets will not require nameplates. Accurately align lettering and engrave minimum of 6.4 mm 0.25 inch high normal block lettering into the white core. Minimum size of nameplates shall be 25 by 63 mm 1.0 by 2.5 inches. Key nameplates to a chart and schedule for each system. Frame charts and schedules under glass and place where directed near each system. Furnish two copies of each chart and schedule.

PART 3 EXECUTION

3.1 GENERAL INSTALLATION REQUIREMENTS

Piping located in air plenums shall conform to NFPA 90A requirements. Piping located in shafts that constitute air ducts or that enclose air ducts shall be noncombustible in accordance with NFPA 90A. Installation of plastic pipe where in compliance with NFPA may be installed in accordance with PPFA-01. The rainwater harvesting system shall be installed complete with necessary equipment, fittings, valves, and accessories. Rainwater harvesting system piping shall be extended 1.5 m 5 feet outside the building, unless otherwise indicated. Piping shall be connected to the exterior service lines or capped or plugged if the exterior service is not in place. Rainwater harvesting system pipes shall be laid in separate trenches, except when otherwise shown. Exterior underground utilities shall be at least 300 mm 12 inches below the[average local frost depth][finish grade] or as indicated on the drawings. If trenches are closed or the pipes are otherwise covered before being connected to the service lines, the location of the end of each plumbing utility shall be marked with a stake or other acceptable means. Valves shall be installed with control no lower than the valve body. All piping located below the building shall be supported from above by the floor slab. Provide adequate working space around all equipment in accordance with manufacturers written requirements. Working space shall allow room to perform maintenance functions as well as to pull coils, pumps, heat transfer surfaces, valves

and valve operators, dampers, controls, control wiring, conduit fans, motors, etc.

3.1.1 Water Pipe, Fittings, and Connections

Water pressure piping, fitting and connections to the rainwater harvesting system and equipment shall be made in accordance with Section 22 00 00 PLUMBING, GENERAL PURPOSE. Rainwater collection piping located outside the building shall be connected in accordance with Section 33 40 00 STORM DRAINAGE UTILITIES.

3.1.1.1 Utilities

The piping shall be extended to all fixtures and equipment. The rainwater harvesting piping system shall be arranged and installed to permit draining. The supply line to each item of equipment or fixture, except flush valves, or other control valves which are supplied with integral stops, shall be equipped with a shutoff valve to enable isolation of the item for repair and maintenance without interfering with operation of other equipment or fixtures. Supply piping to fixtures, hydrants, and flushing devices shall be anchored to prevent movement.

3.1.1.2 Cutting and Repairing

The work shall be carefully laid out in advance, and unnecessary cutting of construction shall be avoided. Damage to building, piping, wiring, or equipment as a result of cutting shall be repaired by mechanics skilled in the trade involved.

3.1.1.3 Protection of Fixtures, Materials, and Equipment

Pipe openings shall be closed with caps or plugs during installation. Equipment shall be tightly covered and protected against dirt, water, chemicals, and mechanical injury. Upon completion of the work, the materials and equipment shall be thoroughly cleaned, adjusted, and operated. Safety guards shall be provided for exposed rotating equipment.

3.1.1.4 Mains, Branches, and Runouts

Piping shall be installed as indicated. Pipe shall be accurately cut and worked into place without springing or forcing. Structural portions of the building shall not be weakened. Aboveground piping shall run parallel with the lines of the building, unless otherwise indicated. Branch pipes from service lines may be taken from top, bottom, or side of main, using crossover fittings required by structural or installation conditions. Supply pipes, valves, and fittings shall be kept a sufficient distance from other work and other services to permit not less than 12 mm 1/2 inch between finished covering on the different services. Bare and insulated water lines shall not bear directly against building structural elements so as to transmit sound to the structure or to prevent flexible movement of the lines. Water pipe shall not be buried in or under floors unless specifically indicated or approved. Changes in pipe sizes shall be made with reducing fittings. Use of bushings will not be permitted except for use in situations in which standard factory fabricated components are furnished to accommodate specific accepted installation practice. Change in direction shall be made with fittings, except that bending of pipe 100 mm (4 inches) 4 inches and smaller will be permitted, provided a pipe bender is used and wide sweep bends are formed. The center-line radius of bends shall be not less than six diameters of the pipe. Bent pipe showing

kinks, wrinkles, flattening, or other malformations will not be acceptable.

3.1.1.5 Expansion and Contraction of Piping

Allowance shall be made throughout for expansion and contraction of water pipe. Risers shall be securely anchored as required or where indicated to force expansion to loops. Branch connections from risers shall be made with ample swing or offset to avoid undue strain on fittings or short pipe lengths. Horizontal runs of pipe over 15 m 50 feet in length shall be anchored to the wall or the supporting construction about midway on the run to force expansion, evenly divided, toward the ends. Sufficient flexibility shall be provided on branch runouts from mains and risers to provide for expansion and contraction of piping. Flexibility shall be provided by installing one or more turns in the line so that piping will spring enough to allow for expansion without straining.

3.1.2 Joints

Installation of pipe and fittings shall be made in accordance with the manufacturer's recommendations. Mitering of joints for elbows and notching of straight runs of pipe for tees will not be permitted. Joints shall be made up with fittings of compatible material and made for the specific purpose intended.

3.1.2.1 Threaded

Threaded joints shall have American Standard taper pipe threads conforming to ASME B1.20.1. Only male pipe threads shall be coated with graphite or with an approved graphite compound, or with an inert filler and oil, or shall have a polytetrafluoroethylene tape applied.

3.1.2.2 Unions and Flanges

Unions, flanges and mechanical couplings shall not be concealed in walls, ceilings, or partitions. Unions shall be used on pipe sizes 65 mm (2-1/2 inches) 2-1/2 inches and smaller; flanges shall be used on pipe sizes 80 mm (3 inches) 3 inches and larger.

3.1.3 Dissimilar Pipe Materials

Connections between ferrous and non-ferrous copper water pipe shall be made with dielectric unions or flange waterways. Dielectric waterways shall have temperature and pressure rating equal to or greater than that specified for the connecting piping. Waterways shall have metal connections on both ends suited to match connecting piping. Dielectric waterways shall be internally lined with an insulator specifically designed to prevent current flow between dissimilar metals. Dielectric flanges shall meet the performance requirements described herein for dielectric waterways. Connecting joints between plastic and metallic pipe shall be made with transition fitting for the specific purpose.

3.1.4 Pipe Sleeves and Flashing

Pipe sleeves shall be furnished and set in their proper and permanent location.

3.1.4.1 Sleeve Requirements

Unless indicated otherwise, provide pipe sleeves meeting the following

requirements:

Secure sleeves in position and location during construction. Provide sleeves of sufficient length to pass through entire thickness of walls, ceilings, roofs, and floors.

A modular mechanical type sealing assembly may be installed in lieu of a waterproofing clamping flange and caulking and sealing of annular space between pipe and sleeve. The seals shall consist of interlocking synthetic rubber links shaped to continuously fill the annular space between the pipe and sleeve using galvanized steel bolts, nuts, and pressure plates. The links shall be loosely assembled with bolts to form a continuous rubber belt around the pipe with a pressure plate under each bolt head and each nut. After the seal assembly is properly positioned in the sleeve, tightening of the bolt shall cause the rubber sealing elements to expand and provide a watertight seal between the pipe and the sleeve. Each seal assembly shall be sized as recommended by the manufacturer to fit the pipe and sleeve involved.

Sleeves shall not be installed in structural members, except where indicated or approved. Rectangular and square openings shall be as detailed. Each sleeve shall extend through its respective floor, or roof, and shall be cut flush with each surface, except for special circumstances. Pipe sleeves passing through floors in wet areas such as mechanical equipment rooms, lavatories, kitchens, and other plumbing fixture areas shall extend a minimum of 100 mm4 inches above the finished floor.

Unless otherwise indicated, sleeves shall be of a size to provide a minimum of [6 mm1/4 inch][25 mmone inch] clearance between bare pipe or insulation and inside of sleeve or between insulation and inside of sleeve. Sleeves in bearing walls and concrete slab on grade floors shall be steel pipe or cast-iron pipe. Sleeves in nonbearing walls or ceilings may be steel pipe, cast-iron pipe, galvanized sheet metal with lock-type longitudinal seam, or plastic.

Except as otherwise specified, the annular space between pipe and sleeve, or between jacket over insulation and sleeve, shall be sealed as indicated with sealants conforming to ASTM C 920 and with a primer, backstop material and surface preparation as specified in Section 07 92 00 JOINT SEALANTS. The annular space between pipe and sleeve, between bare insulation and sleeve or between jacket over insulation and sleeve shall not be sealed for interior walls which are not designated as fire rated.

Sleeves through below-grade walls in contact with earth shall be recessed 12 mm (1/2 inch)1/2 inch from wall surfaces on both sides. Annular space between pipe and sleeve shall be filled with backing material and sealants in the joint between the pipe and[concrete][masonry] wall as specified above. Sealant selected for the earth side of the wall shall be compatible with dampproofing/waterproofing materials that are to be applied over the joint sealant. Pipe sleeves in fire-rated walls shall conform to the requirements in Section 07 84 00 FIRESTOPPING.

3.1.4.2 Flashing Requirements

The annular space between the flashing and the bare pipe or between the flashing and the metal-jacket-covered insulation shall be sealed as indicated. Pipes, up to and including 250 mm (10 inches)10 inches in diameter, passing through floor waterproofing membrane may be installed through a cast-iron sleeve with caulking recess, anchor lugs,

flashing-clamp device, and pressure ring with brass bolts. Flashing shield shall be fitted into the sleeve clamping device. Pipes passing through wall waterproofing membrane shall be sleeved as described above. A waterproofing clamping flange shall be installed.

3.1.4.3 Pipe Penetrations of Slab on Grade Floors

Where pipes, or similar items penetrate slab on grade floors, except at penetrations of floors with waterproofing membrane as specified in paragraphs Flashing Requirements and Waterproofing, a groove 6 to 13 mm1/4 to 1/2 inch wide by 6 to 10 mm1/4 to 3/8 inch deep shall be formed around the pipe, fitting or drain. The groove shall be filled with a sealant as specified in Section 07 92 00 JOINT SEALANTS.

3.1.4.4 Pipe Penetrations

Provide sealants for all pipe penetrations. All pipe penetrations shall be sealed to prevent infiltration of air, insects, and vermin.

3.1.5 Fire Seal

Where pipes pass through fire walls, fire-partitions, fire-rated pipe chase walls or floors above grade, a fire seal shall be provided as specified in Section 07 84 00 FIRESTOPPING.

3.1.6 Supports

3.1.6.1 General

Hangers used to support piping 50 mm (2 inches) 2 inches and larger shall be fabricated to permit adequate adjustment after erection while still supporting the load. Pipe guides and anchors shall be installed to keep pipes in accurate alignment, to direct the expansion movement, and to prevent buckling, swaying, and undue strain. Piping subjected to vertical movement when operating temperatures exceed ambient temperatures shall be supported by variable spring hangers and supports or by constant support hangers. In the support of multiple pipe runs on a common base member, a clip or clamp shall be used where each pipe crosses the base support member. Spacing of the base support members shall not exceed the hanger and support spacing required for an individual pipe in the multiple pipe run. Threaded sections of rods shall not be formed or bent.

3.1.6.2 Pipe Supports and Structural Bracing, Seismic Requirements

Piping and attached valves shall be supported and braced to resist seismic loads as specified in Section 23 05 48 VIBRATION AND SEISMIC CONTROLS FOR HVAC PIPING AND EQUIPMENT. Structural steel required for reinforcement to properly support piping, headers, and equipment, but not shown, shall be provided. Material used for supports shall be as specified in[Section 05 12 00 STRUCTURAL STEEL][Section 05 50 13 MISCELLANEOUS METAL FABRICATIONS][Section 05 51 33 METAL LADDERS][Section 05 52 00 METAL RAILINGS][Section 05 51 00 METAL STAIRS].

3.1.6.3 Pipe Hangers, Inserts, and Supports

Installation of pipe hangers, inserts and supports shall conform to MSS SP-58 and MSS SP-69, except as modified herein.

a. Types 5, 12, and 26 shall not be used.

b. Type 3 shall not be used on insulated pipe.

c. Type 18 inserts shall be secured to concrete forms before concrete is placed. Continuous inserts which allow more adjustment may be used if they otherwise meet the requirements for type 18 inserts.

d. Type 19 and 23 C-clamps shall be torqued per MSS SP-69 and shall have both locknuts and retaining devices furnished by the manufacturer. Field-fabricated C-clamp bodies or retaining devices are not acceptable.

e. Type 20 attachments used on angles and channels shall be furnished with an added malleable-iron steel plate or adapter.

f. Type 24 may be used only on trapeze hanger systems or on fabricated frames.

g. Type 39 saddles shall be used on insulated pipe 100 mm (4 inches)4 inches and larger when the temperature of the medium is 15 degrees C60 degrees F or higher. Type 39 saddles shall be welded to the pipe.

h. Type 40 shields shall:

(1) Be used on insulated pipe less than 100 mm (4 inches).4 inches.

(2) Be used on insulated pipe 100 mm (4 inches)4 inches and larger when the temperature of the medium is 15 degrees C60 degrees F or less.

(3) Have a high density insert for all pipe sizes. High density inserts shall have a density of 128 kg per cubic meter (8 pcf)8 pcf or greater.

i. Horizontal pipe supports shall be spaced as specified in MSS SP-69 and a support shall be installed not over 300 mm1 foot from the pipe fitting joint at each change in direction of the piping. Pipe supports shall be spaced not over 1.5 m5 feet apart at valves. Operating temperatures in determining hanger spacing for PVC pipe shall be 49 degrees C120 degrees F for PVC. Horizontal pipe runs shall include allowances for expansion and contraction.

j. Vertical pipe shall be supported at each floor, except at slab-on-grade, at intervals of not more than 4.5 m15 feet nor more than 2 m8 feet from end of risers. Vertical pipe risers shall include allowances for expansion and contraction.

k. Type 35 guides using steel, reinforced polytetrafluoroethylene (PTFE) or graphite slides shall be provided to allow longitudinal pipe movement. Slide materials shall be suitable for the system operating temperatures, atmospheric conditions, and bearing loads encountered. Lateral restraints shall be provided as needed. Where steel slides do not require provisions for lateral restraint the following may be used:

(1) On pipe 100 mm (4 inches)4 inches and larger when the temperature of the medium is 15 degrees C60 degrees F or higher, a

Type 39 saddle, welded to the pipe, may freely rest on a steel plate.

(2) On pipe less than 100 mm (4 inches)4 inches a Type 40 shield, attached to the pipe or insulation, may freely rest on a steel plate.

(3) On pipe 100 mm (4 inches)4 inches and larger carrying medium less that 15 degrees C60 degrees F a Type 40 shield, attached to the pipe or insulation, may freely rest on a steel plate.

l. Pipe hangers on horizontal insulated pipe shall be the size of the outside diameter of the insulation. The insulation shall be continuous through the hanger on all pipe sizes and applications.

m. Where there are high system temperatures and welding to piping is not desirable, the type 35 guide shall include a pipe cradle, welded to the guide structure and strapped securely to the pipe. The pipe shall be separated from the slide material by at least 100 mm4 inches or by an amount adequate for the insulation, whichever is greater.

n. Hangers and supports for plastic pipe shall not compress, distort, cut or abrade the piping, and shall allow free movement of pipe except where otherwise required in the control of expansion/contraction.

3.1.6.4 Structural Attachments

Attachment to building structure concrete and masonry shall be by cast-in concrete inserts, built-in anchors, or masonry anchor devices. Inserts and anchors shall be applied with a safety factor not less than 5. Supports shall not be attached to metal decking. Supports shall not be attached to the underside of concrete filled floor or concrete roof decks unless approved by the Contracting Officer. Masonry anchors for overhead applications shall be constructed of ferrous materials only.

3.2 RAINWATER HARVESTING SYSTEM

Follow the drawings and manufacturer's written instructions for installation of the rainwater harvesting system. All aboveground piping, valves, fittings, and accessories shall be as specified for domestic water supply. Underground piping from the [fiberglass reinforced plastic][modular] storage tank to the rainwater harvesting system shall be installed in accordance with Section 33 11 00 WATER DISTRIBUTION.

[3.2.1 Modular Storage Tank

Prepare the area where the tank is to be installed in accordance with Section 31 23 00.00 20 EXCAVATION AND FILL. Install the tank in accordance with the tank manufacturer's written instructions. Provide the required types and number modules, inspection ports, inlets, outlet, and overflow connections, and accessories as recommended by the tank manufacturer. Tank shall be vented to atmospheric pressure.

][3.2.2 Fiberglass Reinforced Plastic Storage Tank

Install the tank in accordance with the tank manufacturer's written instructions. Provide the required types and number of anchors, strap

sizes and number of straps, and strap locations, as recommended by the tank manufacturer. Tank shall be vented to atmospheric pressure.

]3.2.3 Submersible Feed Pump

Follow the drawings and the manufacturer's written instructions for installation of the submersible feed pump. Connect the pump controls to the rainwater control system.

3.2.4 Debris Filter

Install the debris filter in accordance with the filter manufacturer's written instructions. Install such that the top cover shall be flush with finish grade after installation is complete.

3.2.5 Initial Runoff Filter

Install the debris filter in accordance with the filter manufacturer's written instructions. Install such that the top cover shall be flush with finish grade after installation is complete.

3.2.6 Rainwater Filter, Purification, and Controls

Follow the drawings and the manufacturer's written instructions for installation of the rainwater filters, purification system and controls.

3.2.7 [Dye][and][Chlorine]Injection System

Follow the drawings and the manufacturer's written instructions for installation of the [dye][and][chlorine]injection system.

[3.2.8 Booster Pump

Follow the drawings and the manufacturer's written instructions for installation of the booster pump. Connect the pump controls to the rainwater control system.

][3.2.9 Packaged Pump System

Follow the drawings and the manufacturer's written instructions for installation of the packaged pump system. Connect the pump controls to the rainwater control system.

]3.2.10 Hydropneumatic Tank

Follow the drawings and the manufacturer's written instructions for installation of the rainwater filters, purification system and controls.

3.3 FIXTURES AND FIXTURE TRIMMINGS

Polished chromium-plated pipe, valves, and fittings shall be provided where exposed to view. Angle stops, straight stops, stops integral with the faucets, or concealed type of lock-shield, and loose-key pattern stops for supplies with threaded, sweat or solvent weld inlets shall be furnished and installed with fixtures. Where connections between copper tubing and faucets are made by rubber compression fittings, a beading tool shall be used to mechanically deform the tubing above the compression fitting. Exposed supply pipes for fixtures and equipment shall be connected to the rough piping systems at the wall, unless otherwise specified under the

item. Floor and wall escutcheons shall be as specified. Drain lines and hot water lines of fixtures for handicapped personnel shall be insulated and do not require polished chrome finish. Plumbing fixtures and accessories shall be installed within the space shown.

[3.3.1 Backflow Prevention Devices

Plumbing fixtures, equipment, and pipe connections shall not cross connect or interconnect between a potable water supply and any source of nonpotable water. Backflow preventers shall be installed where indicated and in accordance with [ICC IPC][and the North Carolina Building Codes] at all other locations necessary to preclude a cross-connect or interconnect between a potable water supply and any nonpotable substance. Backflow preventers shall be located so that no part of the device will be submerged. Backflow preventers shall be of sufficient size to allow unrestricted flow of water to the equipment, and preclude the backflow of any nonpotable substance into the potable water system. Bypass piping shall not be provided around backflow preventers. Access shall be provided for maintenance and testing. Each device shall be a standard commercial unit.

]3.3.2 Access Panels

Access panels shall be provided for concealed valves and controls, or any item requiring inspection or maintenance. Access panels shall be of sufficient size and located so that the concealed items may be serviced, maintained, or replaced. Access panels shall be as specified in[Section 05 50 13 MISCELLANEOUS METAL FABRICATIONS][Section 05 51 33 METAL LADDERS][Section 05 52 00 METAL RAILINGS][Section 05 51 00 METAL STAIRS].

3.4 VIBRATION-ABSORBING FEATURES

Mechanical equipment, including pumps, shall be isolated from the building structure by approved vibration-absorbing features, unless otherwise shown. Each foundation shall include an adequate number of standard isolation units. Each unit shall consist of machine and floor or foundation fastening, together with intermediate isolation material, and shall be a standard product with printed load rating. Isolation unit installation shall limit vibration to [_____] percent of the lowest equipment rpm.

3.5 WATER METER REMOTE READOUT REGISTER

The remote readout register shall be provided thru the DDC for remote reading.

3.6 IDENTIFICATION SYSTEMS

3.6.1 Identification Tags

Identification tags made of brass, engraved laminated plastic, or engraved anodized aluminum, indicating service and valve number shall be installed on valves. Tags shall be 35 mm (1-3/8 inch) 1-3/8 inch minimum diameter, and marking shall be stamped or engraved. Indentations shall be black, for reading clarity. Tags shall be attached to valves with No. 12 AWG, copper wire, chrome-plated beaded chain, or plastic straps designed for that purpose. All hose bibbs connected to the rainwater harvesting system shall be identified with signs that say "CAUTION: RECLAIMED WATER - DO NOT DRINK". The letters on the sign shall be at least 1/2" high.

3.6.2 Pipe Color Code Marking

Color code marking of piping shall be as specified in Section 09 90 00 PAINTS AND COATINGS.

3.6.3 Color Coding Scheme for Locating Hidden Utility Components

Scheme shall be provided in buildings having suspended grid ceilings. The color coding scheme shall identify points of access for maintenance and operation of operable components which are not visible from the finished space and installed in the space directly above the suspended grid ceiling. The operable components shall include valves ans switches. The color coding scheme shall consist of a color code board and colored metal disks. Each colored metal disk shall be approximately 12 mm3/8 inch in diameter and secured to removable ceiling panels with fasteners. The fasteners shall be inserted into the ceiling panels so that the fasteners will be concealed from view. The fasteners shall be manually removable without tools and shall not separate from the ceiling panels when panels are dropped from ceiling height. Installation of colored metal disks shall follow completion of the finished surface on which the disks are to be fastened. The color code board shall have the approximate dimensions of 1 m 3 foot width, 750 mm30 inches height, and 12 mm 1/2 inch thickness. The board shall be made of wood fiberboard and framed under glass or 1.6 mm (1/16 inch)1/16 inch transparent plastic cover. Unless otherwise directed, the color code symbols shall be approximately 20 mm (3/4 inch)3/4 inch in diameter and the related lettering in 12 mm1/2 inch high capital letters. The color code board shall be mounted and located in the mechanical or equipment room. The color code system shall be as determined by the Contracting Officer. The color code shall meet base requirements.

3.7 ESCUTCHEONS

Escutcheons shall be provided at finished surfaces where bare or insulated piping, exposed to view, passes through floors, walls, or ceilings, except in boiler, utility, or equipment rooms. Escutcheons shall be fastened securely to pipe or pipe covering and shall be satin-finish, corrosion-resisting steel, polished chromium-plated zinc alloy, or polished chromium-plated copper alloy. Escutcheons shall be either one-piece or split-pattern, held in place by internal spring tension or setscrew.

3.8 PAINTING

Painting of pipes, hangers, supports, and other iron work, either in concealed spaces or exposed spaces, is specified in Section 09 90 00 PAINTS AND COATINGS.

3.8.1 PAINTING OF NEW EQUIPMENT

New equipment painting shall be factory applied or shop applied, and shall be as specified herein, and provided under each individual section.

3.8.1.1 Factory Painting Systems

Manufacturer's standard factory painting systems may be provided subject to certification that the factory painting system applied will withstand 125 hours in a salt-spray fog test, except that equipment located outdoors shall withstand 3000 hours in a salt-spray fog test. Salt-spray fog test shall be in accordance with ASTM B 117, and for that test the acceptance criteria shall be as follows: immediately after completion of the test,

the paint shall show no signs of blistering, wrinkling, or cracking, and no loss of adhesion; and the specimen shall show no signs of rust creepage beyond 3 mm0.125 inch on either side of the scratch mark.

The film thickness of the factory painting system applied on the equipment shall not be less than the film thickness used on the test specimen. If manufacturer's standard factory painting system is being proposed for use on surfaces subject to temperatures above 50 degrees C 120 degrees F, the factory painting system shall be designed for the temperature service.

3.8.1.2 Shop Painting Systems for Metal Surfaces

Clean, pretreat, prime and paint metal surfaces; except aluminum surfaces need not be painted. Apply coatings to clean dry surfaces. Clean the surfaces to remove dust, dirt, rust, oil and grease by wire brushing and solvent degreasing prior to application of paint, except metal surfaces subject to temperatures in excess of 50 degrees C 120 degrees F shall be cleaned to bare metal.

Where more than one coat of paint is specified, apply the second coat after the preceding coat is thoroughly dry. Lightly sand damaged painting and retouch before applying the succeeding coat. Color of finish coat shall be aluminum or light gray.

a. Temperatures Less Than 50 Degrees C 120 Degrees F: Immediately after cleaning, the metal surfaces subject to temperatures less than 50 degrees C 120 degrees F shall receive one coat of pretreatment primer applied to a minimum dry film thickness of 0.0076 mm 0.3 mil, one coat of primer applied to a minimum dry film thickness of 0.0255 mm one mil; and two coats of enamel applied to a minimum dry film thickness of 0.0255 mm one mil per coat.

b. Temperatures Between 50 and 205 Degrees C 120 and 400 Degrees F: Metal surfaces subject to temperatures between 50 and 205 degrees C 120 and 400 degrees F shall receive two coats of 205 degrees C 400 degrees F heat-resisting enamel applied to a total minimum thickness of 0.05 mm 2 mils.

c. Temperatures Greater Than 205 Degrees C 400 Degrees F: Metal surfaces subject to temperatures greater than 205 degrees C 400 degrees F shall receive two coats of 315 degrees C 600 degrees F heat-resisting paint applied to a total minimum dry film thickness of 0.05 mm 2 mils.

3.9 TESTS, FLUSHING AND DISINFECTION

3.9.1 Rainwater Harvesting System

The following tests shall be performed on the rainwater harvesting system in accordance with [ICC IPC] and [North Carolina Building Codes][_____].

a. Rainwater Harvesting system Test.

b. Water Supply Systems Tests.

3.9.1.1 Test of Backflow Prevention Assemblies

Backflow prevention assembly shall be tested using gauges specifically

designed for the testing of backflow prevention assemblies. Gauges shall be tested annually for accuracy in accordance with the University of Southern California's Foundation of Cross Connection Control and Hydraulic Research or the American Water Works Association Manual of Cross Connection (Manual M-14). Report form for each assembly shall include, as a minimum, the following:

Data on Device	Data on Testing Firm
Type of Assembly	Name
Manufacturer	Address
Model Number	Certified Tester
Serial Number	Certified Tester No.
Size	Date of Test
Location	
Test Pressure Readings	Serial Number and Test Data of Gauges

If the unit fails to meet specified requirements, the unit shall be repaired and retested.

3.9.2 Defective Work

If inspection or test shows defects, such defective work or material shall be replaced or repaired as necessary and inspection and tests shall be repeated. Repairs to piping shall be made with new materials. Caulking of screwed joints or holes will not be acceptable.

3.9.3 System Flushing

3.9.3.1 During Flushing

Before operational tests or disinfection, potable and non-potable water piping system shall be flushed with potable water. Sufficient water shall be used to produce a water velocity that is capable of entraining and removing debris in all portions of the piping system. This requires simultaneous operation of all fixtures on a common branch or main in order to produce a flushing velocity of approximately 1.2 meters per second (4 fps) 4 fps through all portions of the piping system. In the event that this is impossible due to size of system, the Contracting Officer (or the designated representative) shall specify the number of fixtures to be operated during flushing. Contractor shall provide adequate personnel to monitor the flushing operation and to ensure that drain lines are unobstructed in order to prevent flooding of the facility. Contractor shall be responsible for any flood damage resulting from flushing of the system. Flushing shall be continued until entrained dirt and other foreign materials have been removed and until discharge water shows no discoloration.

3.9.3.2 After Flushing

System shall be drained at low points. Strainer screens shall be removed, cleaned, and replaced. After flushing and cleaning, systems shall be prepared for testing by immediately filling water piping with clean, fresh potable water. Any stoppage, discoloration, or other damage to the finish, furnishings, or parts of the building due to the Contractor's failure to properly clean the piping system shall be repaired by the Contractor. Automatic control systems shall be adjusted for proper operation according to manufacturer's instructions. Comply with ASHRAE 90.1 - SI ASHRAE 90.1 - IP for minimum efficiency requirements. Unless more

stringent local requirements exist, lead levels shall not exceed limits established by 40 CFR 50.12 Part 141.80(c)(1). The water supply to the building shall be tested separately to ensure that any lead contamination found during potable water system testing is due to work being performed inside the building.

3.9.4 Operational Test

Upon completion of flushing and prior to disinfection procedures, the Contractor shall subject the rainwater harvesting system to operating tests to demonstrate satisfactory installation, connections, adjustments, and functional and operational efficiency. Such operating tests shall cover a period of not less than 8 hours for each system and shall include the following information in a report with conclusion as to the adequacy of the system:

a. Time, date, and duration of test.

b. Water pressures at the most remote and the highest fixtures.

c. Operation of each fixture and fixture trim.

d. Operation of each valve, hydrant, and faucet.

e. Pump suction and discharge pressures.

f. Operation of each vacuum breaker and backflow preventer.

g. Complete operation of the rainwater harvesting system. This shall include operation under all conditions such as loss of power and low water levels in the storage tank.

3.9.5 Disinfection

After operational tests are complete, the entire domestic non-potable and cold-water distribution system shall be disinfected. System shall be flushed as specified, before introducing chlorinating material. The chlorinating material shall be hypochlorites or liquid chlorine. Except as herein specified, water chlorination procedure shall be in accordance with AWWA C651 and AWWA C652. The chlorinating material shall be fed into the water piping system at a constant rate at a concentration of at least 50 parts per million (ppm). A properly adjusted hypochlorite solution injected into the main with a hypochlorinator, or liquid chlorine injected into the main through a solution-feed chlorinator and booster pump, shall be used. If after the 24 hour and 6 hour holding periods, the residual solution contains less than 25 ppm and 50 ppm chlorine respectively, flush the piping with potable water, and repeat the above procedures until the required residual chlorine levels are satisfied. The system shall then be flushed with clean water until the residual chlorine level is reduced to less than one part per million. During the flushing period each valve shall be opened and closed several times. Samples of water in disinfected containers shall be obtained from several locations selected by the Contracting Officer.

The samples of water shall be tested for total coliform organisms (coliform bacteria, fecal coliform, streptococcal, and other bacteria) in accordance with AWWA 10084. The testing method used shall be EPA approved for drinking water systems and shall comply with applicable local and state requirements.

Disinfection shall be repeated until tests indicate the absence of coliform organisms (zero mean coliform density per 100 milliliters) in the samples for at least 2 full days. The system will not be accepted until satisfactory bacteriological results have been obtained.

3.10 WASTE MANAGEMENT

Place materials defined as hazardous or toxic waste in designated containers. Return solvent and oil soaked rags for contaminant recovery and laundering or for proper disposal. Close and seal tightly partly used sealant and adhesive containers and store in protected, well-ventilated, fire-safe area at moderate temperature. Place used sealant and adhesive tubes and containers in areas designated for hazardous waste. Separate copper and ferrous pipe waste in accordance with the Waste Management Plan and place in designated areas for reuse.

3.11 POSTED INSTRUCTIONS

Framed instructions under glass or in laminated plastic, including wiring and control diagrams showing the complete layout of the entire system, shall be posted where directed. Condensed operating instructions explaining preventive maintenance procedures, methods of checking the system for normal safe operation, and procedures for safely starting and stopping the system shall be prepared in typed form, framed as specified above for the wiring and control diagrams and posted beside the diagrams. The framed instructions shall be posted before acceptance testing of the systems.

-- End of Section --

SECTION 26 11 13.00 20

PRIMARY UNIT SUBSTATION
04/07

PART 1 GENERAL

1.1 SCOPE OF WORK

This section includes the provision of a 15kV medium voltage freestanding outdoor metal-clad switchgear lineup containing vacuum circuit breakers. This switchgear shall replace the existing outdoor medium voltage vacuum switchgear located in Sectionalizing Stations E & F where indicated. The existing switchgear shall be deenergized and replaced during a 72-hour continuous weekend electrical outage to be scheduled by the government in consultation with the contractor. This switchgear presently serves the Naval Aviation Depot 12.47 kV electrical distribution system.

Each switchgear contains Schweitzer Engineering Laboratory (SEL) solid state protective relays, circuit breaker control pushbuttons and test blocks. Station E includes 4 vertical sections including 5 hinged panels with 6 SEL relays and required test blocks. Station F includes 13 vertical sections with 16 hinged panels, 14 SEL relays and required test blocks. The existing relays shall be disconnected and removed from the existing switchgear where indicated and turned over to the Government.

1.2 REFERENCES

The publications listed below form a part of this specification to the extent referenced. The publications are referred to within the text by the basic designation only.

AMERICAN NATIONAL STANDARDS INSTITUTE (ANSI)

ANSI C37.06	(2009) Standard for AC High-Voltage Circuit Breakers Rated on a Symmetrical Current Basis - Preferred Ratings and Related Required Capabilities for Voltages Above 1000 V

ASTM INTERNATIONAL (ASTM)

ASTM A 780	(2009) Standard Practice for Repair of Damaged and Uncoated Areas of Hot-Dip Galvanized Coatings
ASTM B 117	(2009) Standing Practice for Operating Salt Spray (Fog) Apparatus
ASTM D 709	(2001; R 2007) Laminated Thermosetting Materials
ASTM D 1654	(2008) Evaluation of Painted or Coated Specimens Subjected to Corrosive Environments

INTERNATIONAL ELECTROTECHNICAL COMMISSION (IEC)

IEC 60255-21-3	(1993) Electrical Relays - Part 21: Vibration, Shock, Bump And Seismic Tests On Measuring Relays And Protection Equipment - Section 3: Seismic Tests
IEC 60068-2-30	(2005) Environmental Testing - Part 2-30: Tests - Test Db: Damp Heat, Cyclic (12 H + 12 H Cycle)
IEC 60255-21-1	(1988) Electrical relays - Part 21: Vibration, shock, bump and seismic tests on measuring relays and protection equipment - Section One: Vibration tests (sinusoidal)
IEC 60255-21-2	IEC 60255-21-2 Electrical relays - Part 21: Vibration, shock, bump and seismic tests on measuring relays and protection equipment - Section Two: Shock and bump tests
IEC 60255-22-1	(2007)Measuring relays and protection equipment - Part 22-1: Electrical disturbance tests - 1 MHz burst immunity tests
IEC 60255-22-2	(2008) IEC 60255-22-2 Measuring relays and protection equipment – Part 22-2: Electrical disturbance tests – Electrostatic discharge tests
IEC 60255-22-3	(2007) IEC 60255-22-3 Measuring relays and protection equipment – Part 22-3: Electrical disturbance tests – Radiated electromagnetic field immunity
IEC 60255-22-4	(2008) Measuring relays and protection equipment - Part 22-4: Electrical disturbance tests - Electrical fast transient/burst immunity test
IEC 61000-4-4	(2010) Amendment 1 - Electromagnetic compatibility (EMC) - Part 4-4: Testing and measurement techniques - Electrical fast transient/burst immunity test
IEC 61000-4-2	(2008) Electromagnetic compatibility (EMC) - Part 4-2: Testing and measurement techniques - Electrostatic discharge immunity test
IEC 60068-2-1	(2008) Environmental testing - Part 2-1: Tests - Test A: Cold
IEC 60068-2-2	(2007) Environmental testing – Part 2-2: Tests – Test B: Dry heat

INSTITUTE OF ELECTRICAL AND ELECTRONICS ENGINEERS (IEEE)

IEEE C2	(2007; TIA 2007-1; TIA 2007-2; TIA 2007-3; TIA 2007-4; TIA 2007-5) National Electrical Safety Code
IEEE C37.20.1	(2002; Addenda A 2005; Addenda B 2006; R 2007) Standard for Metal-Enclosed Low-Voltage Power Circuit-Breaker Switchgear
IEEE C37.20.2	(1999) Standard for Metal-Clad Switchgear
IEEE C57.12.28	(2005) Standard for Pad-Mounted Equipment - Enclosure Integrity
IEEE C37.90.1	(2002) Standard for Surge Withstand Capability (SWC) Tests for Relays and Relay Systems Associated with Electric Power Apparatus
IEEE 81	(1983) Guide for Measuring Earth Resistivity, Ground Impedance, and Earth Surface Potentials of a Ground System

INTERNATIONAL ELECTRICAL TESTING ASSOCIATION (NETA)

NETA ATS	(2009) Standard for Acceptance Testing Specifications for Electrical Power Equipment and Systems

NATIONAL ELECTRICAL MANUFACTURERS ASSOCIATION (NEMA)

NEMA C12.1	(2008) Electric Meters Code for Electricity Metering
NEMA ST 20	(1992; R 1997) Standard for Dry-Type Transformers for General Applications
NEMA SG 6	(2000) Standard for Power Switching Equipment

NATIONAL FIRE PROTECTION ASSOCIATION (NFPA)

NFPA 70	(2008; AMD 1 2008) National Electrical Code

UNDERWRITERS LABORATORIES (UL)

UL 1558	(1999; R 2006 thru 2009) Standard for Metal-Enclosed Low-Voltage Power Circuit Breaker Switchgear
UL 467	(2007) Grounding and Bonding Equipment
UL 891	(2005; R 2003) Switchboards

1.3 RELATED REQUIREMENTS

Section 26 00 00.00 20 BASIC ELECTRICAL MATERIALS AND METHODS and Section

26 08 00 APPARATUS INSPECTION AND TESTING apply to this section, with the additions and modifications specified herein.

1.4 SUBMITTALS

Government approval is required for submittals with a "G" designation; submittals not having a "G" designation are for Contractor Quality Control approval. The following shall be submitted in accordance with Section 01 33 00 SUBMITTAL PROCEDURES:

1.4.1 Coordinated Submittal Reviews

SD-02 Shop Drawings

Switchgear drawings; G

Submit shop drawings indicating outline dimensions, enclosure construction, shipping splits, lifting and supporting points, electrical single line diagram, and equipment electrical ratings.

Include wiring diagrams and installation details of equipment indicating proposed location, layout and arrangement, control panels, accessories, and other items that must be shown to ensure a coordinated installation. Wiring diagrams shall identify circuit terminals and indicate the internal wiring for each item of equipment and the interconnection between each item of equipment. Drawings shall indicate adequate clearance for operation, maintenance, and replacement of operating equipment devices. Submittals shall include the nameplate data, size, and capacity. Submittals shall also include applicable federal, military, industry, and technical society publication references.

SD-03 Product Data

Switchgear; G

Submittal shall include manufacturer's information for each component, device and accessory provided with the equipment.

SD-05 Design Data

Capacity calculations for battery charger and batteries; G

SD-06 Test Reports

Switchgear Design Tests; G

Switchgear Production Tests; G

Submit report of results of acceptance checks and tests specified by paragraph entitled "Field Quality Control"; G

SD-09 Manufacturer's Field Reports

Switchgear design tests; G

Switchgear production tests; G

SD-10 Operation and Maintenance Data

Switchgear Operation and Maintenance, Data Package 5; G
Include circuit breaker recommended spare parts list.

Submit in accordance with Section 01 78 23 OPERATION AND MAINTENANCE DATA.

SD-11 Closeout Submittals

Formal request for settings; G

Equipment test schedule; G

Assembled Operation and Maintenance Manuals; G

1.5 QUALITY ASSURANCE

1.5.1 Battery Power Calculations

Submit capacity calculations for battery charger and batteries. Calculation shall verify that battery capacity exceeds station d.c. power requirements.

1.5.2 Switchgear Manufacturer

Switchgear manufacturer shall be a company specializing in medium voltage metal-clad switchgear with at least five years documented experience. The manufacturer of the switchgear must be the same as the manufacturer of the circuit breakers.

1.5.3 Switchgear Product Data

Each submittal shall include manufacturer's information for each component, device and accessory provided with the switchgear including:

a. Circuit breaker type, interrupting rating, and trip devices, including available settings

b. Manufacturer's instruction manuals and published time-current curves (on full size logarithmic paper) of each breaker type furnished in the switchgear.

1.5.4 Switchgear Drawings

Drawings shall include, but are not limited to the following:

a. One-line diagram including circuit breakers, fuses, current transformers, potential transformers, control power transformers, protective relays, and meters

b. Outline drawings including front elevation, section views, footprint, and overall dimensions

c. Bus configuration including dimensions and ampere ratings of bus bars

d. Markings and NEMA nameplate data, including circuit breakers information (manufacturer's name, catalog number, and ratings)

e. Circuit breaker type, interrupting rating, and trip devices, including

protective relay available settings

f. Three-line diagrams and elementary diagrams and wiring diagrams with terminals identified, and indicating prewired interconnections between items of equipment and the interconnection between the items.

g. Manufacturer's instruction manuals and published time-current curves (on full size logarithmic paper) of the protective relays connected to each circuit breakers. These shall be used by the designer of record to provide breaker settings that will ensure protection and coordination are achieved.

h. Provisions for future extension.

1.5.5 Regulatory Requirements

In each of the publications referred to herein, consider the advisory provisions to be mandatory, as though the word, "shall" had been substituted for "should" wherever it appears. Interpret references in these publications to the "authority having jurisdiction," or words of similar meaning, to mean the Contracting Officer. Equipment, materials, installation, and workmanship shall be in accordance with the mandatory and advisory provisions of NFPA 70 unless more stringent requirements are specified or indicated.

1.5.6 Standard Products

Provide materials and equipment that are products of manufacturers regularly engaged in the production of such products which are of equal material, design and workmanship. Products shall have been in satisfactory commercial or industrial use for 2 years prior to bid opening. The 2-year period shall include applications of equipment and materials under similar circumstances and of similar size. The product shall have been on sale on the commercial market through advertisements, manufacturers' catalogs, or brochures during the 2-year period. Where two or more items of the same class of equipment are required, these items shall be products of a single manufacturer; however, the component parts of the item need not be the products of the same manufacturer unless stated in this section.

1.5.6.1 Alternative Qualifications

Products having less than a 2-year field service record will be acceptable if a certified record of satisfactory field operation for not less than 6000 hours, exclusive of the manufacturers' factory or laboratory tests, is furnished.

1.5.6.2 Material and Equipment Manufacturing Date

Products manufactured more than 3 years prior to date of delivery to site shall not be used, unless specified otherwise.

1.5.7 MAINTENANCE

1.5.7.1 Switchgear Operation and Maintenance Data

Submit Operation and Maintenance Manuals in accordance with Section 01 78 23 OPERATION AND MAINTENANCE DATA.

1.5.7.2 Assembled Operation and Maintenance Manuals

Manuals shall be assembled and bound securely in durable, hard covered, water resistant binders. The manuals shall be assembled and indexed in the following order with a table of contents. The contents of the assembled operation and maintenance manuals shall be as follows:

a. Manufacturer's O&M information required by the paragraph entitled "SD-10, Operation and Maintenance Data".

b. Catalog data required by the paragraph entitled, "SD-03, Product Data".

c. Drawings required by the paragraph entitled, "SD-02, Shop Drawings".

d. Prices for spare parts and supply list.

e. Information on metering

f. Design test reports

g. Production test reports

1.5.8 WARRANTY

The equipment items shall be supported by service organizations which are reasonably convenient to the equipment installation in order to render satisfactory service to the equipment on a regular and emergency basis during the warranty period of the contract.

1.5.9 Formal Request for Settings

a. Where settings will be provided by the Government to achieve protection and coordination via relays and protective devices, submit a formal request for settings 30 days in advance of the date that settings will be needed, to allow the Contracting Officer to forward a copy of approved shop drawings to SOUTHNAVFACENGCOM; Code 162; Director, Utilities Engineering Division.

b. The equipment requiring protection and coordination shall be installed prior to making this request.

c. Include approved shop drawings, manufacturer's instructions to set the protective devices, and manufacturer's time-current curves.

PART 2 PRODUCTS

2.1 PRODUCT COORDINATION

Products and materials not considered to be switchgear and related accessories are specified in Section 33 71 02.00 20 UNDERGROUND ELECTRICAL DISTRIBUTION.

2.2 SWITCHGEAR

NEMA SG 6 and UL 891 IEEE C37.20.2 and ANSI C37.06.

2.2.1 Metal-Clad Switchgear Assembly

a. The metal-clad switchgear shall consist of a outdoor enclosure

containing circuit breakers and the necessary accessory components all factory assembled, except for necessary shipping splits, and operationally checked. The assembly shall be a self-supporting and floor mounted on a level concrete pad. The integrated switchgear assembly shall withstand the effects of closing, carrying and interrupting currents up to the assigned maximum short circuit rating.

b. System Voltage: 12.47 kV nominal, three-phase, three-wire grounded. 60Hz.

c. Maximum Design Voltage: 27.0 kV.

d. Impulse Withstand (Basic Impulse Level): 125 kV

e. Power Frequency Withstand: 60 kV, 1-minute test

f. Main Bus Ampacity: 2000 amps, continuous for Station E or 3000 amps continuous for Station F as indicated on drawings

g. Momentary Circuit Breakers Current Close and Latch Rating: 37,000 symmetrical amperes

2.2.2 Components

a. Stationary Structure

(1) Switchgear E shall consist of four new verticals including 5 circuit breaker compartments assembled to form a rigid self-supporting completely enclosed structure providing steel barriers between sections.

(2) Switchgear F shall consist of thirteen new verticals including eleven circuit breakers, battery, and auxiliary compartments assembled to form a rigid self-supporting completely enclosed structure providing steel barriers between sections.

(3) The sections are divided by metal barriers into the following separate compartments: Circuit breaker, instrument, main bus, auxiliary device and cable. Each feeder section shall have two circuit breaker compartments.

b. Circuit Breaker Compartment

(1) Each circuit breaker compartment shall be designed to house a horizontal drawout metal-clad vacuum circuit breaker. The stationary primary disconnecting contacts shall be silver-plated copper and mounted within molded cycloaliphatic epoxy support bushings. The movable contacts and springs shall be mounted on the circuit breaker for ease of inspection/maintenance.

(2) Entrance to the stationary primary disconnecting contacts shall be automatically covered by metal shutters when the circuit breaker is withdrawn from the connected position to the test or disconnected position or removed from the circuit breaker compartment. Extend a ground bus into a circuit breaker compartment to automatically ground the breaker frame with high-current spring type grounding contacts located on the breaker chassis when in the test and connected positions. Guide rails for positioning the circuit breaker and all other necessary hardware

shall be an integral part of the circuit breaker compartment. Blocking devices shall interlock breaker frame sizes to prevent installation of a lower ampere rating or interrupting capacity element into a bottom compartment without use of a transport truck or lift device.

c. Cable Compartment/Ground Bus

(1) Compression type cable lugs shall be furnished as shown on the plans. The ground bus (1/4 inch by 2 inch copper) shall extend through this compartment for the full length of the switchgear. NEMA Class A-20 standoff insulators for bus support (load bus runbacks and any auxiliary bus) shall be of high-track-resistant polyester material.

d. Main Bus Compartments

(1) The main bus shall be rated 2000 amps for Station E and 3000 amps for Station F and be fully insulated for its entire length with an epoxy coating by the fluidized bed process. The conductors shall be silver-plated copper and be of a bolted design. Access to this compartment is gained from the front or rear of the structure by removing a steel barrier. Provide standard provisions for future extension of the switchgear at both ends.

e. Doors and Panels

(1) Relays, meters, control switches and testing blocks shall be mounted on a formed front-hinged panel for each circuit breaker compartment.

(2) Provide these panels for each circuit breaker as indicated.

f. Circuit Breakers

(1) The circuit breakers shall each be rated for 13,800 nominal volts, 15,000 maximum volts, 60 Hz, 5 cycle interrupting time with a continuous current rating of 1200, 2000, or 3000 amps as indicated and a maximum symmetrical interrupting rating of 23kA/500MVA at 13.8kV. Furnish circuit breakers with one vacuum interrupter per phase. Breakers of same type and rating shall be completely interchangeable. The circuit breaker shall be operated by means of a stored energy mechanism, which is normally charged by a universal motor but can also be charged by the manual handle supplied on each breaker for manual emergency closing or testing. The closing speed of the moving contacts is to be independent of both the control voltage and the operator. Provide a full front shield on the breaker. Secondary control circuits shall be connected automatically with a self-aligning, self-engaging plug and receptacle arrangement when the circuit breaker is racked into the connected position. Provision shall be made for secondary control plug to be manually connected in test position. A minimum of 10 auxiliary contacts (5a, 5b) shall be provided for external use. The racking mechanism to move the breaker between positions shall be operable with the front door closed and position indication shall be visible with door closed.

(2) An interlocking system shall be provided to prevent racking a closed circuit breaker to or from any position. An additional

interlock shall automatically discharge the stored-energy operating mechanism springs upon removal of the breaker out of the compartment.

(3) The circuit breaker control voltage shall be 125 volts DC - for switchgear at Station F and 48 volts DC for switchgear at Station E.

g. Instrument Transformers

(1) Current transformers: Each circuit breaker compartment shall have provision for front-accessible mounting of up to four current transformers per phase. Current transformers (CT) shall be ANSI standard relay accuracy and located two on bus side and two on cable side of circuit breaker. Provide CTs in the quantity and location indicated. CTs shall be 5-tap with the full and tapped ratio as indicated. The current transformer shall assembly shall be insulated for the full voltage rating of the switchgear. The current transformers' wiring shall be Type SIS #10 AWG. Relaying and metering accuracy shall conform to ANSI standards.

(2) Voltage transformers: Provide drawout mounted voltage transformers with primary current- limiting fuses and shall have ratio as indicated. The transformers shall have mechanical rating equal to the momentary rating of the circuit breakers and shall have metering accuracy per ANSI standards.

h. Control Wiring

(1) The switchgear shall be wired with type SIS #14 AWG, except where larger size wire is specified. The switchgear shall be provided with terminal blocks for outgoing control connections. Wire markers shall be provided for each end of all control wires.

i. Protective Relays: Provide protective relays and communications processor as indicated on drawings and as specified herein for each circuit breaker. Each relay shall be as manufactured by Schweitzer Engineering Laboratories (SEL). Relay settings will be furnished by the Government and installed on each new relay by the contractor.

(1) Type SEL-351S three-phase, four-wire protection and breaker control relay. The microprocessor-based relay shall provide a combination of functions including protection, monitoring, control, fault locating, and automation. Relay self-checking functions shall be included. Specific operational and functional requirements are as follows.

a. Phase Fault Overcurrent Protection. The relay shall incorporate phase and negative-sequence overcurrent elements for detection of phase faults. The relay shall provide directional elements, load encroachment logic, and torque-control capability (internal and external).

b. Adaptive Phase Overcurrent Elements. The relay shall incorporate adaptive phase overcurrent elements that perform reliably in the presence of current transformer saturation, DC offset, and off-frequency harmonics.

c. Ground Fault Overcurrent Protection. The relay shall

incorporate residual ground and neutral ground overcurrent elements for detection of ground faults. The relay shall provide directional elements and torque-control capability (internal and external).

d. Directional Ground Protection. The relay shall incorporate directional ground elements for ungrounded, Petersen Coilgrounded, and impedance-grounded systems, using a neutral current channel that can withstand 500 A for one second (thermal rating).

e. Under- and Overvoltage Elements. The relay shall incorporate undervoltage and overvoltage elements for creating protection and control schemes, including but not limited to the following: voltage checks (e.g., hot bus/dead line) for reclosing; blown transformer high-side fuse detection logic; control schemes for capacitor banks.

f. Sequence Voltage Elements. The relay shall incorporate positive-, negative-, and zero-sequence voltage elements that can be logically configured for either under- or overvoltage applications.

g. Under- and Overfrequency Protection. The relay shall incorporate six levels of under-/overfrequency elements for detection of power system frequency disturbances. Each setting level shall use an independently set timer for load shedding or generator tripping schemes.

h. Autoreclosing Control. The relay shall incorporate a four-shot recloser. It shall include four independently set open time intervals, an independently set reset time from reclose cycle, and an independently set reset time from lockout.

i. Synchronism Check or Broken-Delta Voltage Input. The relay shall include two synchronism check elements with separate maximum angle settings (e.g., one for autoreclosing and one for manual closing). The synchronism check function shall compensate for breaker close time and constant phase angle differences between the two voltage sources used for synchronism check (phase angle differences settable in 30-degree increments). Alternatively, the relay shall accept a broken-delta (zero-sequence) voltage input (in place of a synchronism check voltage) to use as a polarizing source for the zero-sequence voltage-polarized ground directional elements.

j. Selectable Wye or Delta Voltage Inputs. The relay shall operate with either wye-connected (four wire) or open-deltaconnected (three wire) potential transformers.

k. Coordination With Downstream Reclosers. The relay shall include 38 standard recloser time-overcurrent curves and sequence coordination logic for secure and dependable operation for faults beyond a line recloser.

l. Operator Controls. The relay shall include 10 operator controls on the relay front panel; these functions shall also be accessible in the relay control logic. The operator control panel shall include pushbuttons and LEDs with the following markings: Ground Enabled, Reclose Enabled, Remote Enabled, Alternate

Settings, Lock, Hot Line Tag, AUX 1, AUX 2, Close/Breaker Closed (or AUX 3), and Trip/Breaker Open (or AUX 4).

m. Independent Trip/Close Pushbuttons. The relay shall include independently operated breaker trip/close switches and indicating lamps. The switches and breaker status lamps shall be functional regardless of the relay status.

n. Event Reporting and Sequential Events Recorder (SER). The relay shall be capable of automatically recording disturbance events of 15 or 30 cycles with settable prefault duration and user-defined triggering. Events shall be stored in nonvolatile memory. The relay shall include an SER that stores the latest 512 entries.

o. Fast SER Protocol. The relay shall be capable of communicating unsolicited binary SER messages.

p. Status and Trip Target LEDs. The relay shall include 16 status and trip target LEDs.

q. Overload and Unbalance Alarms. The relay shall include user-settable demand current thresholds for phase, negativesequence, neutral, and residual demand measurements.

r. Circuit Breaker Monitor. The relay shall include a breaker wear monitor with user-definable wear curves, operation counter, and accumulated interrupted currents by phase.

s. Substation Battery Monitor. The relay shall measure and report the substation battery voltage presented to the relay power supply terminals. Two user-selectable threshold parameters shall be provided for alarm and control purposes.

t.Fault Locator. The relay shall include a fault locating algorithm to provide an accurate estimate of fault location without communications channels, special instrument transformers, or prefault information.

u. Digital Relay-to-Relay Communications. The relay shall have eight send and eight receive logic elements in each of two communications ports for dedicated relay-to-relay communications.

v. Automation. The relay shall include 16 local control elements, 16 remote control logic points, 16 latching logic points, and 16 display messages in conjunction with a local display panel included in the relay. The relay shall have the capability to display custom messages.

w. Power Elements. The relay shall include four independent directional power elements that can respond to either real or reactive power.

x. Voltage Sag/Swell/Interruption Report. The relay shall include automatic monitoring of system disturbances, triggered by settable voltage thresholds as a percentage of the predisturbance voltage. The report shall be stored in nonvolatile memory.

y. Relay Logic. The relay shall include programmable logic

functions for a wide range of user- configurable protection, monitoring, and control schemes.

z. Communication. The relay shall include three independent EIA-232 serial ports and one EIA-485 serial port for external communications.

aa. Distributed Network Protocol (DNP). The relay shall incorporate compliant DNP3 Level 2 Slave protocol communications capability.

bb. IRIG-B. The relay shall include an interface port for a demodulated IRIG-B time synchronization input signal.

cc. PC Interface. The relay shall be capable of being set by Windows®-based graphical and ASCII terminal interfaces.

(2) Type SEL-587Z High-Impedance Bus Differential and Overcurrent Relay. The microprocessor-based relay shall provide a combination of functions including protection, monitoring, control, and automation. Relay self-checking functions shall be included. Specific requirements are as follows:

a. High-Impedance Differential Protection. The relay shall have three independent differential elements, each with two setting levels to provide for protection as well as open CT detection. Input resistance shall be 2000 ohms or higher. The relay shall include three MOVs with the ability to clamp the peak voltage to below 2000 V.

b. Overcurrent Fault Protection. The relay shall incorporate 19 overcurrent elements to provide phase, negative-sequence, and residual current protection.

c. Status and Trip Target LEDs. The relay shall include eight status and trip target LEDs.

d. Communication. The relay shall include two EIA-232 serial ports to provide flexible communication to external computers and control systems. The rear serial port shall be isolated from ground and shall be optionally available as an EIA-485 port. The relay shall operate at a speed of 300-38400 baud. Three-level password protection shall be included to provide remote secure communication. Modbus®, ASCII, and binary protocols shall be available for communication with SCADA, local HMI, or modems.

e. Relay Logic. The relay shall include programmable logic functions for a wide range of user-configurable protection, monitoring, and control schemes.

f. Auxiliary Inputs/Outputs. The relay shall include fully programmable optoisolated inputs and output contacts.

g. Metering. The relay shall include metering capabilities for real-time phase and differential quantities, as well as phase demand and peak demand current values.

h. Event Reporting and Sequential Events Recorder (SER). The relay shall be capable of automatically recording disturbance

events of 15 cycles with programmable triggering. Events shall be stored in nonvolatile memory. The relay shall include an SER that stores the latest 512 entries.

i. Automation. The relay shall include eight local control elements, eight remote control logic points, and eight display messages in conjunction with a local display panel included in the relay. The relay shall have the capability to display custom messages.

j. Internal Real-Time Clock. The relay shall include a real-time clock, with battery backup, synchronizable to demodulated IRIG-B input, to provide accurate time stamps for event records.

k. Low-Level Testing. The relay shall include a low-level test interface to permit relay testing with low-energy test equipment.

(3) Type SEL-2032 Communications Processor. The communications processor shall operate a star communications network and provide a combination of functions including Boolean logic processing, automatic transmission of outgoing messages and parsing of responses, data scaling, data aggregation, simultaneous collection of data from up to 16 slave devices (both SEL and non-SEL), and simultaneous data access for multiple master devices. The communications processor shall provide Modbus® RTU Slave and DNP 3.0 Level 2 Slave protocols and provide two card slots for the installation of additional protocol cards. Specific operational and functional requirements are as follows:

a. Power Supply. The communications processor shall be capable of operating on a wide range of power supply voltages and shall be available with one of three power supply types: 85-350 Vdc or 85-264 Vac, 38-200 Vdc or 85-140 Vac, or 20-60 Vdc.

b. Temperature. The communications processor shall be capable of continuous operation over a temperature range of -40° to +85°C in order to allow mounting in an outdoor control cubicle or in case of the failure of enclosure heating or cooling. The communications processor shall be type tested to IEC 60068-2-1: 1990 (Test Ad 16 hr at -40 degrees C), IEC 60068-2-2: 1974 (Test Bd 16 hr a +85 degrees C), and IEC 60068-2-30: 1980 (Test Db 12 + 12-hour cycle at 55 degrees C, 6 cycles).

c. Environmental Testing. The communications processor shall be tested to the same standards as protective relays including IEC 60255-21-1, IEC 60255-21-2, IEC 60255-21-3, IEC 60255-22-1, IEC 60255-22-2, IEC 61000-4-2, IEC 60255-22-3, IEC 60255-22-4, IEC 61000-4-4, and IEEE C37.90.1.

d. Input/Output. There shall be an optional input/output module with 16 optoisolated inputs and 4 outputs. There shall be four types of inputs available rated for operation at a nominal 24 Vdc, 48 Vdc, 125 Vdc, or 250 Vdc. The inputs shall draw no more than 4 mA when nominal control voltage is applied. The outputs shall be contact type with a 30 A make and 6 A carry with MOV protection.

e. Alarm Output. There shall be an alarm contact output programmed to signal internal errors and malfunctions. The alarm contact shall be programmable so that the alarm conditions that activate the output can include additional conditions with the

communications processor, collected data, and the results of logical and mathematical calculations. The alarm contact shall be configurable to operate as a Form A or Form B contact.

f. EIA-232 Ports. The communications processor shall have one front-panel and 16 rear-panel ports using standard DB-9 connectors and MOV protection. Two pins on each port shall be available as a demodulated IRIG-B time synchronization signal. One rear port shall be capable of receiving a demodulated IRIG-B signal. Six rear ports shall have a selectable +5 Vdc output on Pin 1. Each rear port shall be capable of operation at 300-9200 bps.

g. Password Security. The communications processor shall have a multilevel password system requiring that you pass through lower levels to reach higher levels. The passwords shall be user configurable and allow up to 12 characters including case-sensitive letters, digits, and special characters including !@#$%^&*()-_=+; There shall be a jumper to allow emergency password disable. This password scheme meets or exceeds all of the requirements of the DOE Password Guide (DOE G 205.3-1).

h. Protocol Card Slots. There shall be two slots that allow installation of field-installable protocol cards. The communications processor shall automatically recognize and communicate with the protocol cards.

i. Database. Each port shall have a separate database that allows data collection and labeling. Manipulation of data within the databases shall be available via label reference or memory address reference. There shall be a programmable User region that allows the data transfer, data scaling and offset, arithmetic operations, Boolean combinations, and data concentration.

j. Configuration. Configuration of messages and data processing functions shall be through simple message commands and data movement equations that do not require specific knowledge or tools for programming in C or other programming languages. Configuration of messages for data collection with SEL devices shall include automatic parsing and labeling of data.

k. Outgoing Messages. The communications processor shall be capable of sending outgoing messages triggered based on collected data, calculated data, time of day, and periodic time functions. Outgoing messages can contain any binary or ASCII character, internal database registers, and automatic CRC checksum calculation.

l. Incoming Messages. In response to an outgoing message, the communications processor shall be capable of ignoring the response or parsing as ASCII integer, ASCII floating point, character string, integer string, integer string with XON/XOFF, and flexible parsing. Flexible parsing shall be capable of handling messages that contain numbers that may be replaced with non-numeric text temporarily through a system of decode equations.

m. Auto-Configuration. The communications processor shall be capable of automatically communicating with SEL devices to determine communication parameters and features of the connected device.

n. Interleaved Conversations. The communications processor shall be capable of simultaneous ASCII, binary, and IRIG-B communications with connected SEL relays over a single communications cable or with the addition of transceivers over a single fiber-optic pair. The collection of status and measurement data and control operations from master devices connected to the SEL-2032 Communications Processor shall not be interrupted by ASCII engineering conversations with the relay over the same cable.

o. DNP 3. The communications processor shall be capable of operating as a DNP 3 Level 2 Slave. The communications processor shall allow configuration of any incoming data or data calculated within the communications processor to be available through the DNP interface. All control points within the communications processor shall be available as DNP control points using latch on/latch off, pulse on/pulse off, or trip/close control functions. SER data collected from SEL IEDs shall be available as timestamped DNP event data.

p. Modbus. The communications processor shall be capable of operating as a Modbus slave simultaneously on as many as three ports. The Modbus slave implementation shall allow direct access to any register within the communications processor. The Modbus implementation shall allow control of any control point within the communications processor.

q. Boolean Equation Processing. The communications processor shall process Boolean equation statements for the purposes of triggering outgoing messages and control actions and combining collected data for retrieval by master devices.

r. Configuration Storage. The communications processor shall store all settings and configuration in nonvolatile memory allowing recovery after prolonged loss of power including failure of the internal battery.

s. Nonvolatile Storage. There shall be flash memory used as nonvolatile storage of incoming and calculated data within the communications processor. Data stored in the nonvolatile memory shall be available for retrieval after sustained power outage including failure of the internal battery.

t. SER Data. The communications processor shall collect SER data from SEL IEDs. The collected SER data shall be forwarded to other SEL devices or equipment using the SEL Fast SER protocol. The communications processor shall also forward timestamped data as DNP 3 event data objects with timestamps.

2.2.3 FABRICATION

a. Construction: Each equipment bay shall be a separately constructed cubicle assembled to form a rigid free-standing unit. Minimum sheet metal thickness shall be 11-gauge steel on all exterior surfaces. Adjacent bays shall be securely bolted together to form an integrated rigid structure. The rear covers shall be removable to assist installation and maintenance of bus and cables. Each individual unit shall be braced to prevent distortion.

b. Dimensions: Standard dimensions per outdoor section shall be 36 inches wide by 109 inches high by 110.5 inches deep.

c. The metal-clad switchgear shall be fully assembled, inspected and tested at the factory prior to shipment. Large line-ups shall be split to permit normal shipping and handling as well as for ease of rejoining at the job site.

2.2.4 Heaters

Provide 120-volt heaters in each switchgear section. Heaters shall be of sufficient capacity to control moisture condensation in the section, shall be 250 watts minimum, and shall be controlled by a thermostat located in the section. Thermostat shall be industrial type, high limit, to maintain sections within the range of 60 to 90 degrees F. Supply voltage for the heaters shall be obtained from a control power transformer within the switchgear. If heater voltage is different than switchboard voltage, provide transformer rated to carry 125 percent of heater full load rating. Transformer shall have 220 degrees C insulation system with a temperature rise not exceeding 115 degrees C and shall conform to NEMA ST 20. Energize electric heaters in switchboard assemblies while the equipment is in storage or in place prior to being placed in service. Provide method for easy connection of heater to external power source. Provide temporary, reliable external power source if commercial power at rated voltage is not available on site.

2.2.5 Terminal Boards

Provide with engraved plastic terminal strips and screw type terminals for external wiring between components and for internal wiring between removable assemblies. Terminal boards associated with current transformers shall be short-circuiting type. Terminate conductors for current transformers with ring-tongue lugs. Terminal board identification shall be identical in similar units. External wiring shall be color coded consistently for similar terminal boards.

2.2.6 Wire Marking

Mark control and metering conductors at each end. Provide factory-installed, white, plastic tubing, heat stamped with black block type letters on factory-installed wiring. On field-installed wiring, provide white, preprinted, polyvinyl chloride (PVC) sleeves, heat stamped with black block type letters. Each sleeve shall contain a single letter or number, shall be elliptically shaped to securely grip the wire, and shall be keyed in such a manner to ensure alignment with adjacent sleeves. Provide specific wire markings using the appropriate combination of individual sleeves. Each wire marker shall indicate the device or equipment, including specific terminal number to which the remote end of the wire is attached.

2.2.7 Factory Finishing

a. All steel parts, except galvanized base, shall be cleaned and a zinc-phosphate pre-treatment applied prior to paint application.

b. Paint color shall be ANSI 61, light gray; TGIC polyester powder, applied electrostatically through air. Following paint application, parts shall be baked to produce a hard durable finish. The average thickness of the paint fill shall be 2.0 mils. Paint film shall be

uniform in color and free from blisters, sags, flaking and peeling. Paint coating system shall comply with IEEE C57.12.28 for galvanized steel.

c. Adequacy of paint finish to inhibit the buildup of rust on ferrous metal materials shall be tested and evaluated per paragraphs 5.2.8.1-7 of IEEE C37.20.2-1987. Salt spray withstand tests in accordance with ASTM D 1654 and ASTM B 117 shall be performed on a periodic basis to provide conformance with the corrosion resistance standard of at least 4000 hours minimum.

2.2.8 Station Batteries and Charger

Provide station batteries and charger, suitable for the requirements of the switchgear and vacuum circuit breakers. Batteries shall be 12.5 V, 60 cells, lead-acid, sealed, totally absorbed electrolyte type. The minimum station battery size shall be 200 ampere-hours or larger if manufacturer determines it is required for operation of breakers for Station E. The minimum Station battery size shall be 100 ampere-hours for Station F.

a. Sealed batteries: Provide batteries with leakproof, spillproof electrolyte utilizing highly absorbent material to separate the positive and negative plates. Battery jars shall be hermetically sealed with welded seams. Batteries shall be maintenance-free and shall not require water to be added. Capacity shall be calculated by switchgear manufacturer and approved by Contracting Officer before acceptance.

b. Battery charger shall be full-wave rectifier type, utilizing silicon semiconductor devices. Charger shall maintain a float charge of 2.15 V per cell and an equalizing charge of 2.33 V per cell. An equalizing charge timer shall be provided which operates automatically after an AC power failure of 5 seconds or more. Timer shall be adjustable for any time period up to 24 hours. Timer shall also be capable of being actuated manually. Adjustable float and equalizing voltage potentiometers shall be provided. Charger voltage shall be maintained within plus or minus 1/2 percent from no load to full load with AC line variations of plus or minus 10 percent and frequency variations of plus or minus 5 percent. DC voltmeter and ammeter with a minimum 3 1/2 inch scale and 2 percent accuracy of full scale shall be provided. Output current shall be limited to 115 percent of rated output current, even down to short circuit of the DC output terminals. Solid state circuit shall have AC and DC transient voltage terminals. AC and DC magnetic circuit breakers shall be provided. Circuit breakers shall not be overloaded or actuated under any external circuit condition, including recharge of a fully discharged battery and short circuit of the output terminals. Charger shall be capable of continuous operation at rated current at an ambient temperature of 40 degrees C. Output DC current capacity shall match the requirements of the batteries provided.

c. Secure battery rack such that it can not overturn or be disrupted by lateral forces accompanying a seismic disturbance. Provide steel, two- or three-step racks, painted with two coats of acid resistant paint for mounting batteries. Provide lead-plated copper inter-rack connectors and cell numbers with each rack.

2.3 MANUFACTURER'S NAMEPLATE

Each item of equipment shall have a nameplate bearing the manufacturer's

name, address, model number, and serial number securely affixed in a conspicuous place; the nameplate of the distributing agent will not be acceptable. This nameplate and method of attachment may be the manufacturer's standard if it contains the required information.

2.4 FIELD FABRICATED NAMEPLATES

ASTM D 709. Provide laminated plastic nameplates for each switchgear, equipment enclosure, relay, switch, and device; as specified in this section or as indicated on the drawings. Each nameplate inscription shall identify the function and, when applicable, the position. Nameplates shall be melamine plastic, 0.125 inch thick, white with black center core. Surface shall be matte finish. Corners shall be square. Accurately align lettering and engrave into the core. Minimum size of nameplates shall be one by 2.5 inches. Lettering shall be a minimum of 0.25 inch high normal block style.

2.5 EXISTING SWITCHGEAR E MODIFICATIONS

The existing verticals at switchgear E that are not being replaced shall be upgraded as follows:

a. Existing horizontal buswork shall be removed and replaced with new bus rated 2000 amps and be fully insulated for its entire length with an epoxy coating by the fluidized bed process. The conductors shall be silver-plated copper and be of a bolted design.

b. The vertical bus in verticals 7 and 8 shall be also upgraded to 2000 amps.

c. All current transformers used for bus differential relay in compartments 4, 5, and 6 shall be removed and replaced with new 2000 amp multi-ratio transformers that comply with the requirements of Section 2.2.2.G.1.

d. All current transformers in Sections 7 and 8 shall be removed and replaced with new 2000 amp multi-ratio transformers that compy with the requirements of Section 2.2.2.G.1.

2.6 SOURCE QUALITY CONTROL

2.6.1 Equipment Test Schedule

The Government reserves the right to witness tests. Provide equipment test schedules for tests to be performed at the manufacturer's test facility. Submit required test schedule and location, and notify the Contracting Officer 30 calendar days before scheduled test date. Notify Contracting Officer 15 calendar days in advance of changes to scheduled date.

a. Test Instrument Calibration

1. The manufacturer shall have a calibration program which assures that all applicable test instruments are maintained within rated accuracy.

2. The accuracy shall be directly traceable to the National Institute of Standards and Technology.

3. Instrument calibration frequency schedule shall not exceed 12

months for both test floor instruments and leased specialty equipment.

4. Dated calibration labels shall be visible on all test equipment.

5. Calibrating standard shall be of higher accuracy than that of the instrument tested.

6. Keep up-to-date records that indicate dates and test results of instruments calibrated or tested. For instruments calibrated by the manufacturer on a routine basis, in lieu of third party calibration, include the following:

(a) Maintain up-to-date instrument calibration instructions and procedures for each test instrument.

(b) Identify the third party/laboratory calibrated instrument to verify that calibrating standard is met.

2.6.2 Switchgear Design Tests

IEEE C37.20.1 and UL 1558.

2.6.2.1 Design Tests

Furnish documentation showing the results of design tests on a product of the same series and rating as that provided by this specification.

a. Short-circuit current test

b. Enclosure tests

c. Dielectric test

2.6.3 Switchgear Production Tests

IEEE C37.20.1 and UL 1558. Furnish reports which include results of production tests performed on the actual equipment for this project. These tests include:

a. 60-hertz dielectric tests

b. Mechanical operation tests

c. Electrical operation and control wiring tests

d. Ground fault sensing equipment test

2.7 CIRCUIT BREAKER LIFTING DEVICE

Provide manufacturer's standard device for lifting and lowering the supplied vacuum circuit breaker for servicing.

PART 3 EXECUTION

3.1 INSTALLATION

Electrical installations shall conform to IEEE C2, NFPA 70, and to the requirements specified herein.

3.2 GROUNDING

NFPA 70 and IEEE C2, except that grounds and grounding systems shall have a resistance to solid earth ground not exceeding 5 ohms.

3.2.1 Grounding Electrodes

Provide driven ground rods as specified in Section 33 71 02.00 20 UNDERGROUND ELECTRICAL DISTRIBUTION. Connect ground conductors to the upper end of the ground rods by exothermic weld or compression connector. Provide compression connectors at equipment end of ground conductors.

3.2.2 Equipment Grounding

Provide bare copper cable not smaller than No. 4/0 AWG not less than 30 inches below grade connecting to the indicated ground rods. When work in addition to that indicated or specified is directed to obtain the specified ground resistance, the provision of the contract covering "Changes" shall apply.

3.2.3 Connections

Make joints in grounding conductors and loops by exothermic weld or compression connector. Exothermic welds and compression connectors shall be installed as specified in Section 33 71 02.00 20 UNDERGROUND ELECTRICAL DISTRIBUTION, paragraph entitled "Grounding Connections."

3.2.4 Grounding and Bonding Equipment

UL 467, except as indicated or specified otherwise.

3.3 INSTALLATION OF EQUIPMENT AND ASSEMBLIES

Install and connect equipment furnished under this section as indicated on project drawings, the approved shop drawings, and as specified herein.

3.3.1 Switchgear

IEEE C37.20.1.

3.3.2 Meters and Instrument Transformers

NEMA C12.1.

3.3.3 Field Applied Painting

Where field painting of enclosures is required to correct damage to the manufacturer's factory applied coatings, provide manufacturer's recommended coatings and apply in accordance with manufacturer's instructions.

3.3.4 Galvanizing Repair

Repair damage to galvanized coatings using ASTM A 780, zinc rich paint, for galvanizing damaged by handling, transporting, cutting, welding, or bolting. Do not heat surfaces that repair paint has been applied to.

3.3.5 Field Fabricated Nameplate Mounting

Provide number, location, and letter designation of nameplates as indicated. Fasten nameplates to the device with a minimum of two sheet-metal screws or two rivets.

3.4 FOUNDATION FOR EQUIPMENT AND ASSEMBLIES

3.4.1 Exterior Location

Mount switchgear on existing concrete slab where indicated. Provide new conduit turnups and and reuse existing conduit turnups where indicated, and cable entrance space required by the equipment to be mounted. Seal voids around conduit openings in slab with water- and oil-resistant caulking or sealant. Cut off and bush conduits 3 inches above slab surface. Concrete work shall be as specified in Section 03 30 00 CAST-IN-PLACE CONCRETE.

3.5 FIELD QUALITY CONTROL

Contractor shall submit request for settings of breakers to the Contracting Officer after approval of switchgear and at least 30 days in advance of their requirement.

3.5.1 Performance of Acceptance Checks and Tests

Perform in accordance with the manufacturer's recommendations and include the following visual and mechanical inspections and electrical tests, performed in accordance with NETA ATS.

3.5.1.1 Switchgear

a. Visual and Mechanical Inspection

1. Compare equipment nameplate data with specifications and approved shop drawings.

2. Inspect physical, electrical, and mechanical condition.

3. Confirm correct application of manufacturer's recommended lubricants.

4. Verify appropriate anchorage, required area clearances, and correct alignment.

5. Inspect all doors, panels, and sections for paint, dents, scratches, fit, and missing hardware.

6. Verify that fuse and circuit breaker sizes and types correspond to approved shop drawings.

7. Verify that current transformer ratios and tap settings correspond to approved shop drawings.

8. Inspect all bolted electrical connections for high resistance using low-resistance ohmmeter, verifying tightness of accessible bolted electrical connections by calibrated torque-wrench method, or performing thermographic survey.

9. Confirm correct operation and sequencing of electrical and

mechanical interlock systems.

10. Clean switchgear.

11. Inspect insulators for evidence of physical damage or contaminated surfaces.

12. Verify correct barrier and shutter installation and operation.

13. Exercise all active components.

14. Inspect all mechanical indicating devices for correct operation.

15. Verify that vents are clear.

16. Test operation, alignment, and penetration of instrument transformer withdrawal disconnects.

17. Inspect control power transformers.

b. Electrical Tests

1. Perform insulation-resistance tests on each bus section.

2. Perform overpotential tests.

3. Perform insulation-resistance test on control wiring; Do not perform this test on wiring connected to solid-state components.

4. Perform control wiring performance test.

5. Perform primary current injection tests on the entire current circuit in each section of assembly.

6. Verify operation of switchgear heaters.

3.5.1.2 Vacuum Circuit Breakers - Medium Voltage - Power

a. Visual and Mechanical Inspection

1. Compare equipment nameplate data with specifications and approved shop drawings.

2. Inspect physical and mechanical condition.

3. Confirm correct application of manufacturer's recommended lubricants.

4. Inspect anchorage, alignment, and grounding.

5. Perform all mechanical operational tests on both the circuit breaker and its operating mechanism.

6. Measure critical distances such as contact gap as recommended by manufacturer.

7. Verify tightness of accessible bolted connections by calibrated torque-wrench method per manufacturer's recommendations.

8. Record as-found and as-left operation counter readings.

9. Verify that all maintenance devices are available for servicing and operating the breaker.

10. Verify that primary and secondary contact wipe and other dimensions vital to satisfactory operation of the breaker are correct.

11. Perform all mechanical operator and contact alignment tests on both the breaker and its operating mechanism.

12. Inspect all bolted electrical connections for high resistance using low-resistance ohmmeter, verifying tightness of accessible bolted electrical connections by calibrated torque-wrench method, or performing thermographic survey.

13. Verify cell fit and element alignment.

14. Verify racking mechanism and test operation of circuit breaker lifting device.

b. Electrical Tests

1. Perform a contact-resistance test.

2. Verify trip, close, trip-free and antipump function.

3. Trip circuit breaker by operation of each protective device.

4. Perform insulation-resistance tests.

5. Perform vacuum bottle integrity (overpotential) test across each bottle with breaker in the open position in strict accordance with the manufacturer's instructions. Do not exceed maximum voltage stipulated for this test.

3.5.1.3 Current Transformers

a. Visual and Mechanical Inspection

1. Compare equipment nameplate data with specifications and approved shop drawings.

2. Inspect physical and mechanical condition.

3. Verify correct connection.

4. Verify that adequate clearances exist between primary and secondary circuit.

5. Inspect all bolted electrical connections for high resistance using low-resistance ohmmeter, verifying tightness of accessible bolted electrical connections by calibrated torque-wrench method, or performing thermographic survey.

6. Verify that all required grounding and shorting connections provide good contact.

b. Electrical Tests

1. Perform resistance measurements through all bolted connections with low-resistance ohmmeter, if applicable.

2. Perform insulation-resistance tests.

3. Perform polarity tests.

4. Perform ratio-verification tests.

3.5.1.4 Protective Relays and Communications Processor

a. Visual and Mechanical Inspection

1. Compare equipment nameplate data with specifications and approved shop drawings.

2. Inspect physical and mechanical condition.

3. Verify tightness of electrical connections.

b. Electrical Tests

1. Place government furnished settings on protective relays using ACSELerator SEL-5030 software

2. Calibrate relaysaccording to manufacturer's published data.

3. Verify all instrument multipliers.

4. Electrically confirm that current transformer and voltage transformer secondary circuits are intact.

3.5.1.5 Electrical Tests - Voltage (Potential) Performance

1. Perform insulation-resistance tests.

2. Perform a polarity test on each transformer to verify the polarity marks on H1-X1 relationships as applicable.

3. Perform a turns ratio test on all tap positions, if applicable.

4. Measure potential circuit burdens at transformer terminals and determine the total burden.

5. Measure circuit burden at transformer terminals and determine the total burden.

3.5.1.6 Battery Systems

a. Visual and mechanical inspection

1. Compare equipment nameplate data with specifications and approved shop drawings.

2. Inspect physical and mechanical condition.

3. Verify tightness of accessible bolted electrical conditions by

calibrated torque-wrench method.

4. Measure electrolyte specific gravity and temperature and visually check fill level.

5. Verify adequacy of battery support racks, mounting, anchorage, and clearances.

b. Electrical Tests

1. Set charger float and equalizing voltage levels.

2. Verify all charger functions and alarms.

3. Measure each cell voltage and total battery voltage with charger energized and in float mode of operation.

4. Perform a capacity load test.

3.5.1.7 Grounding System

a. Visual and Mechanical Inspection

1. Inspect ground system for compliance with contract plans and specifications.

b. Electrical Tests

1. IEEE 81. Perform ground-impedance measurements utilizing the fall-of-potential method. On systems consisting of interconnected ground rods, perform tests after interconnections are complete. On systems consisting of a single ground rod perform tests before any wire is connected. Take measurements in normally dry weather, not less than 48 hours after rainfall. Use a portable ground testing megger in accordance with manufacturer's instructions to test each ground or group of grounds. The instrument shall be equipped with a meter reading directly in ohms or fractions thereof to indicate the ground value of the ground rod or grounding systems under test.

2. Submit the measured ground resistance of each ground rod and grounding system, indicating the location of the rod and grounding system. Include the test method and test setup (i.e., pin location) used to determine ground resistance and soil conditions at the time the measurements were made.

3.5.2 Follow-Up Verification

Upon completion of acceptance checks, settings, and tests, the Contractor shall show by demonstration in service that circuits and devices are in good operating condition and properly performing the intended function. Circuit breakers shall be tripped by operation of each protective device. Test shall require each item to perform its function not less than three times. As an exception to requirements stated elsewhere in the contract, the Contracting Officer shall be given 5 working days advance notice of the dates and times for checks, settings, and tests.

-- End of Section --

SECTION 26 27 14.00 20

ELECTRICITY METERING
07/10

PART 1 GENERAL

1.1 REFERENCES

The publications listed below form a part of this specification to the extent referenced. The publications are referred to within the text by the basic designation only.

NATIONAL ELECTRICAL MANUFACTURERS ASSOCIATION (NEMA)

ANSI C12.1	(2008) Electric Meters Code for Electricity Metering
ANSI C12.18	(2006) Protocol Specification for ANSI Type 2 Optical Port
ANSI C12.19	(1997) Utility Industry End Device Data Tables
ANSI C12.20	(2002) Electricity Meters - 0.2 and 0.5 Accuracy Classes
ANSI C12.7	(2005) Requirements for Watthour Meter Sockets

INTERNATIONAL ELECTROTECHNICAL COMMISSION (IEC)

IEC 60687	(2000) Alternating Current Static Watt-Hour Meters for Active Energy
IEC 62053-22	(2003) Electricity Metering Equipment (a.c.) - Particular Requirements - Part 22: Static Meters for Active Energy (Classses 0,2 S and 0,5 S)

INSTITUTE OF ELECTRICAL AND ELECTRONICS ENGINEERS (IEEE)

IEEE C2	(2007; TIA 2007-1; TIA 2007-2; TIA 2007-3; TIA 2007-4; TIA 2007-5) National Electrical Safety Code
IEEE C37.90.1	(2002) Standard for Surge Withstand Capability (SWC) Tests for Relays and Relay Systems Associated with Electric Power Apparatus
IEEE C57.13	(2008) Standard Requirements for Instrument Transformers
IEEE 100	(2000; Archived) The Authoritative Dictionary of IEEE Standards Terms

INTERNATIONAL ELECTRICAL TESTING ASSOCIATION (NETA)

NETA ATS	(2009) Standard for Acceptance Testing Specifications for Electrical Power Equipment and Systems

NATIONAL FIRE PROTECTION ASSOCIATION (NFPA)

NFPA 70	(2008; AMD 1 2008) National Electrical Code

1.2 DEFINITIONS

Unless otherwise specified or indicated, electrical and electronics terms used in these specifications, and on the drawings, shall be as defined in IEEE 100.

1.3 SUBMITTALS

Government approval is required for submittals with a "G" designation; submittals not having a "G" designation are for [Contractor Quality Control approval.] [information only. When used, a designation following the "G" designation identifies the office that will review the submittal for the Government.]

[Technical data packages consisting of technical data and computer software (meaning technical data which relates to computer software) which are specifically identified in this project and which may be defined/required in other specifications shall be delivered strictly in accordance with the CONTRACT CLAUSES and in accordance with the Contract Data Requirements List, DD Form 1423. Data delivered shall be identified by reference to the particular specification paragraph against which it is furnished. All submittals not specified as technical data packages are considered 'shop drawings' under the Federal Acquisition Regulation Supplement (FARS) and shall contain no proprietary information and be delivered with unrestricted rights.]

Submit the following in accordance with Section 01 33 00 SUBMITTAL PROCEDURES[, the CONTRACT CLAUSES and DD Form 1423]:

SD-02 Shop Drawings

Installation Drawings[; G][; G, [_____]]

SD-03 Product Data

Electricity meters[; G][; G, [_____]]

[The most recent meter product data shall be submitted as a Technical Data Package and shall be licensed to the project site. Any software shall be submitted on CD-ROM and [_____] hard copies of the software user manual shall be submitted for each piece of software provided.]

Current transformer[; G][; G, [_____]]

Potential transformer[; G][; G, [_____]]

External communications devices[; G][; G, [_____]]

[Configuration Software[; G][; G, [_____]]

The most recent version of the configuration software for each type (manufacturer and model) shall be submitted as a Technical Data Package and shall be licensed to the project site. Software shall be submitted on CD-ROM and [_____] hard copies of the software user manual shall be submitted for each piece of software provided.

] SD-06 Test Reports

Acceptance checks and tests[; G][; G, [_____]]

System functional verification[; G][; G, [_____]]

Building meter installation sheet, per building[; G][; G, [_____]]

Completed meter schedule[; G][; G, [_____]]

[Meter image report[; G][; G, [_____]]

The meter image data and meter configuration file shall be submitted as a Technical Data Package.]

SD-10 Operation and Maintenance Data

Electricity Meters and Accessories, Data Package 5[; G][; G, [_____]]

Submit operation and maintenance data in accordance with Section 01 78 23 OPERATION AND MAINTENANCE DATA and as specified herein.

SD-11 Closeout Submittals

System functional verification[; G][; G, [_____]]

1.4 QUALITY ASSURANCE

1.4.1 Installation Drawings

Drawings shall be provided in hard-copy and electronic form, and shall indicate but not be limited to the following:

a. Elementary diagrams and wiring diagrams with terminals identified of [kilowatt] [advanced] meter, [current transformers,] [potential transformers,][protocol modules,][communications interfaces,][Ethernet connections,][telephone lines]. [For each typical meter installation, provide a diagram.]

b. One-line diagram, including meters, [switch(es),][current transformers,][potential transformers,] [protocol modules,][communications interfacess,][Ethernet connections,][telephone outlets,][and fuses]. [For each typical meter installation, provide a diagram.]

1.4.2 Standard Products

Provide materials and equipment that are products of manufacturers regularly engaged in the production of such products which are of equal

material, design and workmanship. Products shall have been in satisfactory commercial or industrial use for 1 year prior to bid opening. The 1-year period shall include applications of equipment and materials under similar circumstances and of similar size. The product, or an earlier release of the product, shall have been on sale on the commercial market through advertisements, manufacturers catalogs, or brochures during the prior 1-year period. Where two or more items of the same class of equipment are required, these items shall be products of a single manufacturer; however, the component parts of the item need not be the products of the same manufacturer unless stated in this section.

1.4.3 Material and Equipment Manufacturing Data

Products manufactured more than 1 year prior to date of delivery to site shall not be used, unless specified otherwise.

1.5 MAINTENANCE

1.5.1 Additions to Operation and Maintenance Data

In addition to requirements of Data Package 5, include the following on the actual electricity meters and accessories provided:

a. A condensed description of how the system operates

b. Block diagram indicating major assemblies

c. Troubleshooting information

d. Preventive maintenance

e. Prices for spare parts and supply list

1.6 WARRANTY

The equipment items shall be supported by service organizations which are reasonably convenient to the equipment installation in order to render satisfactory service to the equipment on a regular and emergency basis during the warranty period of the contract.

1.7 SYSTEM DESCRIPTION

1.7.1 System Requirements

Electricity metering, consisting of meters and associated equipment, will be used to record the electricity consumption and other values as described in the sections that follow and as shown on the drawings. Communication system requirements are contained in a separate specification section as identified in paragraph entitled "Communications Interfaces".

1.7.2 Selection Criteria

Metering components are part of a system that includes the physical meter, data recorder function and communications method. Every building site identified shall include sufficient metering components to measure the electrical parameters identified and to store and communicate the values as required in the following sections.

[Contractor shall verify that the electricity meter installed on any

building site is compatible with the base-wide metering system with respect to the types of meters selected and the method used to program the meters for initial use. Software and meter programming tools are necessary to set up the meters described by this specification. New software tools different from the meter programming methods currently used by base personnel will require separate approval for use.]

[Contractor shall verify that the metering system installed on any building site is compatible with the facility-wide or base-wide communication and meter reading protocol system.]

PART 2 PRODUCTS

2.1 ELECTRICITY METERS AND ACCESSORIES

2.1.1 Physical and Common Requirements

[a. Metering system components shall be installed according to the Metering System Schedule shown [in this specification][on the drawings].]

b. [Replace all existing meter bases. Use meter and base form of 9S unless installation-specific limitations require the use of a different form type.] [Existing meter bases can be re-used if they are electrically functional, in physically good condition, and show no signs of corrosion on the electrical contacts. If the existing meter base is usable, the meter base determines meter form factor. If a new meter is being installed, use meter and base form factor of 9S unless installation-specific limitations require the use of a different form type.]

c. [Meter shall have NEMA [3R] [3R stainless steel] enclosure for surface mounting with bottom or rear penetrations.]

d. Surge withstand capability shall conform to IEEE C37.90.1.

e. Use #12 SIS (XHHW, or equivalent) wiring with ring lugs for all meter connections. Color code and mark the conductors [as follows:

(1) Red - Phase A CT - C1
(2) Orange - Phase B CT - C2
(3) Brown - Phase C CT - C3
(4) Gray with white stripe - neutral current return - C0
(5) Black - Phase A voltage - V1
(6) Yellow - Phase B voltage - V2
(7) Blue - Phase C voltage - V3
(8) White - Neutral voltage]

2.1.2 Potential Transformer Requirements

a. Meter shall be capable of connection to the service voltage phases and magnitude being monitored. If the meter is not rated for the service voltage, provide suitable potential transformers to send an acceptable voltage to the meter.

b. Voltage input shall be optically isolated to 2500 volts DC from signal and communications outputs. Components shall meet or exceed IEEE C37.90.1.

c. Provide [a pull-out type fuse block containing] one fuse per phase, Class RK type, to protect the voltage input to the meter. Size fuses as recommended by the meter manufacturer. Fusing shall either be inside the secondary compartment of the transformer or inside the same enclosure as the CT shorting device.

[d. Potential transformers will be used to convert 480 volt inputs to 120 volts for the locations shown on the metering schedule. Potential transformers shall be rated indoor or outdoor, as required for the specific application. Voltage rating shall provide 120 volts, wye-connected, 3 phase, 4 wire, 60 Hz, insulation class, 600 volts. Potential transformers BIL shall be 10 kV and shall have an accuracy class of 0.3 at burdens w, x, and y. Thermal rating shall be 500 VA.]

[e. The Contractor shall be responsible for determining the actual voltage ratio of each potential transformer for medium voltage applications. Transformer shall conform to IEEE C57.13 and the following requirements.

(1) Type: Dry type, of two-winding construction.

(2) Weather: Outdoor or indoor rated for the application.

(3) Frequency: Nominal 60 Hz.

(4) Accuracy: Plus or minus 0.3% at 60 Hz.

f. Potential transformers installed inside switchgear and panels shall be rated for interior use. Voltage rating shall provide 120 volts, wye-connected, 3 phase, 4 wire, 60 Hz, insulation class, 600 volts. Potential transformers BIL shall be a minimimum of 10 kV, and have an insulation class and BIL rating that equals or exceeds the ratings of the associated switchgear. Potential transformers shall have an accuracy class of 0.3 at burdens w, x, and y. Thermal rating shall be 500 VA. Potential transformers shall be accessed from the front and mounted in a metering section.]

2.1.3 Current Transformer Requirements

a. Current transformer shall be installed with a rating as shown in the schedule.

b. Current transformers shall have an Accuracy Class of 0.3 (with a maximum error of +/- 0.3% at 5.0 amperes) when operating within the specified rating factor.

c. Current transformers shall be solid-core, bracket-mounted for new installations using ring-tongue lugs for electrical connections. Current transformers shall be accessible and the associated wiring shall be installed in an organized and neat workmanship arrangement. Current transformers that are retrofitted onto existing switchgear busbar can be a busbar split-core design.

d. Current transformers shall have:

(1) Insulation Class: All 600 volt and below current transformers shall be rated 10 KV BIL. [Current transformers for 2400 and 4160 volt service shall be rated 25 KV BIL.]

(2) Frequency: Nominal 60 Hz.

(3) Burden: Burden class shall be selected for the load.

(4) Phase Angle Range: 0 to 60 degrees.

e. Meter shall accept current input from standard instrument transformers (5A secondary current transformers).

f. Current inputs shall have a continuous rating in accordance with IEEE C57.13.

g. Provide one single-ratio current transformer for each phase per power transformer with characteristics listed in the following table.

Single-Ratio Current Transformer Characteristics

kVA	Sec. Volt	CT Ratio	RF	Meter Acc. Class
[500]	[208Y/120]	[1200/5]	[1.33]	[0.3 thru B0.05]
[750]	[480Y/277]	[800/5]	[1.33]	[0.3 thru B0.05]

2.1.4 Meter Requirements

[Notwithstanding any other provision of this contract, meters shall be [ ]; no other product will be acceptable.]

[Electricity meters shall include the following features:

a. Meter shall comply with ANSI C12.1, ANSI C12.19, and ANSI C12.20.

b. Meter sockets shall comply with ANSI C12.7.]

[c. Meter shall comply with IEC 62053-22, certified by a qualified third party test laboratory.

d. Meter shall comply with IEC 60687 certified by a qualified 3rd party test laboratory.]

e. Meter design shall be as follows. Refer to the meter schedule for locations.

[(1) Meter shall be socket-mount design.]

[(2) Meter shall be panel-mounted design. Meters shall be semi-flush, back-connected, dustproof, draw-out switchboard type. Cases shall have window removable covers capable of being sealed against tampering. Meters shall be of a type that can be withdrawn through approved sliding contacts from fronts of panels or doors without opening current-transformer secondary circuits, disturbing external circuits, or requiring disconnection of any meter leads. Necessary test devices shall be incorporated within each meter and shall provide means for testing either from an external source of electric power or from associated instrument transformers or bus voltage.]

f. Meter shall be a Class 20, transformer rated design.

g. [Use Class 200 meters for direct current reading without current transformers for applications with an expected load less than 200

amperes.]

h. Meter shall be rated for use at temperature from -40 [ ] degrees Centigrade to +70 [ ] degrees Centigrade.

i. The meters shall have an electronic demand recording register and shall be secondary reading as indicated. The register shall be used to indicate maximum kilowatt demand as well as cumulative or continuously cumulative demand. Demand shall be measured on a block-interval basis and shall be capable of a 5 to 60 minute interval and initially set to a 15-minute interval. It shall have provisions to be programmed to calculate demand on a rolling interval basis. Meter readings shall be true RMS.

j. The electronic module register shall be of modular design with non-volatile data storage. Downloading meter stored data shall be capable via an optical port. Recording capability of data storage with a minimum capability of 89 days of 15 min, 2 channel interval data. The meter shall be capable of providing at least 2 KYZ pulse outputs (dry contacts). Default initial configuration (unless identified otherwise by base personnel) shall be:

(1) First channel - kWh
(2) Second channel - kVARh
(3) KYZ output #1 - kWh
(4) KYZ output #2 - kVARh

k. All electronic modules shall have identical features available in accordance with this specification. The meter schedule identifies which features shall be activated at each meter location.

l. Enable switches for Time of Use (TOU), pulse and load profile measurement module at the factory.

m. Meter shall have an optical port on front of meter capable of speeds from 9600 to a minimum of 19.2k baud, and shall be initially set at 9600 baud. Optical device shall be compatible with ANSI C12.18.

n. Meters shall have user programmable consolidated forms and 120-480 volt capabilities with auto service analysis.

o. Provide blank tag fixed to the meter faceplate for the addition of the meter multiplier, which will be the product of the current transformer [and potential transformer] ratio and will be filled in by base personnel on the job site. The meter's nameplate shall include:

(1) Meter ID number.
(2) Rated voltage.
(3) Current class.
(4) Metering form.
(5) Test amperes.
(6) Frequency.
(7) Catalog number.
(8) Manufacturing date.

p. On switchboard style installations, provide switchboard case with disconnect means for meter removal incorporating automatic short-circuiting of current transformer circuits.

q. Meter covers shall be polycarbonate resins with an optical port and reset. Plug in battery mounting location shall be in front. Time-of-use (TOU), load profile, and KYZ capability shall be indicated on the meter.

r. The normal billing data scroll shall be fully programmable. Data scroll display shall include the following.

(1) Number of demand resets.
(2) End-of-interval indication.
(3) Maximum demand.
(4) New maximum demand indication.
(5) Cumulative or continuously cumulative.
(6) Time remaining in interval.
(7) Kilowatt hours.

s. The register shall incorporate a built-in test mode that allows it to be tested without the need for any special tools or other accessories and saves data and constant prior to start of test. The following quantities shall be available for display in the test mode:

(1) Present interval's accumulating demand.
(2) Maximum demand.
(3) Number of impulses being received by the register.

t. Pulse module simple I/O board with programmable ratio selection.

u. Meters shall be programmed after installation via an optical port. Optical display shall show TOU data, peak kWh, semi-peak kWh, off peak kWh, and phase angles.

v. Self-monitoring to provide for:

(1) Unprogrammed register.
(2) RAM checksum error.
(3) ROM checksum error.
(4) Hardware failure.
(5) Memory failure.
(6) EPROM error.
(7) Battery status (fault, condition, or time in service).

w. Liquid crystal alphanumeric displays, 9 digits, blinking squares confirm register operation. 6 Large digits for data and smaller digits for display identifier.

x. Display operations, programmable sequence with display identifiers. Display identifiers shall be selectable for each item. Continually sequence with time selectable for each item.

y. The meters shall support three modes of registers: Normal Mode, Alternate Mode, and Test Mode. The meter also shall support a "Toolbox" or "Service Information" (accessible in the field) through an optocom port to a separate computer using the supplied software to allow access to instantaneous service information such as voltage, current, power factor, load demand, and the phase angle for individual phases.

z. Meter shall have a standard [4] [ ]-year warranty.]

2.1.5 Disconnect Method

a. Provide a 10-pole safety disconnect complete with isolation devices for the voltage and current transformer inputs, including a shorting means for the current transformers.

[b. Disconnecting wiring blocks shall be provided between the current transformer and the meter. A shorting mechanism shall be built into the wiring block to allow the current transformer wiring to be changed without removing power to the transformer. The wiring blocks shall be located where they are accessible without the necessity of disconnecting power to the transformer.

c. Voltage monitoring circuits shall be equipped with disconnect switches to isolate the meter base or socket from the voltage source.[Provide fuse protection in accordance with paragraph entitled "Voltage Requirements"]]

2.1.6 Installation Methods

a. Transformer Mounted ("XFMR" in Metering Systems Schedule). Meter base shall be located outside on the secondary side of the pad-mounted transformer.

b. Stand Mounted Adjacent to Transformer ("STAND" in Metering Systems Schedule). Meter base shall be mounted on a structural steel pole approximately 4 feet from the transformer pad. This can be used for multiple meters associated with a single transformers.

c. Building Mounted ("BLDG" in Metering Systems Schedule). Meter base shall be mounted on the side of the existing building near the service entrance.

d. Panel Mounted. ("PNL" in Metering Systems Schedule). Meter shall be mounted where directed.

e. Commercial meter pedestal ("PED" in Metering Systems Schedule).

2.2 COMMUNICATIONS INTERFACES

Provide a communications interface that is contained within each meter. [Refer to Section [ ] for the communication interface requirements for these meters.]

2.3 SPARE PARTS

[Provide the following spare parts:

a. Power Meter - two for each type used with batteries.

b. Communications interface - one for each type used.]

2.4 METERING SYSTEM SCHEDULE

[ ]

PART 3 EXECUTION

3.1 INSTALLATION

Electrical installations shall conform to IEEE C2, NFPA 70 (National Electrical Code), and to the requirements specified herein. Provide new equipment and materials unless indicated or specified otherwise.

3.1.1 Existing Condition Survey

The Contractor shall perform a field survey, including inspection of all existing equipment, resulting clearances, and new equipment locations intended to be incorporated into the system and furnish an existing conditions report to the Government. The report shall identify those items that are non-workable as defined in the contract documents. The Contractor shall be held responsible for repairs and modifications necessary to make the system perform as required.

3.1.1.1 Existing Meter Sockets

In some cases, the existing meter sockets will have to be replaced to accommodate the new electrical meters. An existing socket is considered unacceptable for any of the following conditions:

a. It is a non-ANSI form factor meter socket.

b. It is a panel mount form factor.

c. It is weathered beyond the point of being safe to reuse.

d. It is installed incorrectly, such as a non-weather resistant enclosure installed outdoors.

e. It is not the correct form factor for the existing electrical service.

3.1.1.2 Existing Meters

As part of the existing condition survey, the following applies for installations with existing meters:

a. Replace any meters that do not comply with this section.

b. If CTs are installed, verify that they comply with this section. If they do not comply, replace them with CTs that comply with this section. One CT per phase is required for wye-connected systems.

[c. If potential transformers are installed on low-voltage systems, remove the PTs as part of the installation.]

d. Install disconnect switches as specified in this section.

3.1.2 Scheduling of Work and Outages

[The Contract Clauses shall govern regarding permission for power outages, scheduling of work, coordination with Government personnel, and special working conditions.][ ]

3.1.3 Configuration Software

The standard meter shall include the latest available version of firmware and software. Meter shall either be programmed at the factory or shall be programmed in the field. When field programming is performed, turn field programming device over to the Contracting Officer at completion of project.

3.2 FIELD QUALITY CONTROL

Perform the following acceptance checks and tests on [a random sample of 10 percent of the installed meters as designated by the Contracting Officer] [all installed meters].

3.2.1 Performance of Acceptance Checks and Tests

Perform in accordance with the manufacturer's recommendations and include the following visual and mechanical inspections and electrical tests, performed in accordance with NETA ATS.

a. Meter Assembly

(1) Visual and mechanical inspection.

(a) Compare equipment nameplate data with specification and approved shop drawings.

(b) Inspect physical and mechanical condition. Confirm the meter is firmly seated in the socket, the socket is not abnormally heated, the display is visible, and the ring and seal on the cover are intact.

(c) Inspect all bolted electrical connections for high resistance using low-resistance ohmmeter, or by verifying tightness of accessible bolted electrical connections by calibrated torque-wrench method.

(d) Verify grounding of metering enclosure.

(e) Verify the presence of surge arresters.

(f) Verify that the CT ratio and the PT ratio are properly included in the meter multiplier or the programming of the meter. Confirm that the multiplier is provided on the meter face or on the meter.

(g) Make note of, and report, any "Error-Code" or "Caution-Code" on the meter's display.

(h) Provide building meter installation sheet, per building for each facility.

(i) Provide the completed meter schedule for the installation.

(2) Provide meter image report.

b. Current Transformers

(1) Visual and mechanical inspection.

(a) Compare equipment nameplate data with specification and approved shop drawings.

(b) Inspect physical and mechanical condition.

(c) Verify correct connection, including polarity.

(d) Inspect all bolted electrical connections for high resistance using low-resistance ohmmeter, verifying tightness of accessible bolted electrical connections by calibrated torque-wrench method.

(e) Verify that required grounding and shorting connections provide good contact.

(2) Electrical Tests.

(a) Perform resistance measurements through all bolted connections with low-resistance ohmmeter.

[c. Potential Transformers

(1) Visual and mechanical inspection.

(a) Verify potential transformers are rigidly mounted.

(b) Verify potential transformers are the correct voltage.

(c) Verify that adequate clearances exist between the primary and secondary circuit.

(2) Electrical Tests.

(a) Perform a ratio-verification test.]

3.2.2 System Functional Verification

Verify that the installed meters are working correctly and accurately measuring electricity usage when commissioned. Confirm that the meter socket is wired correctly; it is considered wired properly if the following conditions are satisfied:

a. It is verified that the correct meter base was originally installed.

b. All voltage phases are present.

c. Phase rotation is correct.

d. Phase angles are correct.

e. The new meter accurately measures power magnitude and direction, and can communicate as required by paragraph entitled "Communications Interfaces".

-- End of Section --

SECTION 26 31 00.00 22

SOLAR ENERGY ELECTRICAL POWER GENERATION SYSTEMS
06/10

PART 1 GENERAL

1.1 REFERENCES

The publications listed below form a part of this specification to the extent referenced. The publications are referenced within the text by the basic designation only.

AMERICAN SOCIETY OF CIVIL ENGINEERS (ASCE)

ASCE/SEI 7-05	(2005; R 2006) Minimum Design Loads for Buildings and Other Structures

ASTM INTERNATIONAL (ASTM)

ASTM A 1008/A 1008M	(2009a) Standard Specification for Steel, Sheet, Cold-Rolled, Carbon, Structural, High-Strength Low-Alloy and High-Strength Low-Alloy with Improved Formability, Solution Hardened, and Bake Hardened
ASTM A 500/A 500M	(2009) Standard Specification for Cold-Formed Welded and Seamless Carbon Steel Structural Tubing in Rounds and Shapes
ASTM A 653/A 653M	(2009a) Standard Specification for Steel Sheet, Zinc-Coated (Galvanized) or Zinc-Iron Alloy-Coated (Galvannealed) by the Hot-Dip Process
ASTM B 633	(2007) Standard Specification for Electrodeposited Coatings of Zinc on Iron and Steel
ASTM A 666	(2003) Standard Specification for Annealed or Cold-Worked Austenitic Stainless Steel Sheet, Strip, Plate and Flat Bar

INTERNATIONAL CODE COUNCIL (ICC)

ICC IBC	(2009; Errata First Printing) International Building Code

INTERNATIONAL ELECTROTECHNICAL COMMISSION (IEC)

IEC 61215	(2005) Crystalline Silicon Terrestrial Photovoltaic (PV) Modules - Design Qualification and Type Approval
IEC 61646	(2008) Thin-film terrestrial photovoltaic (PV) modules - Design qualification and type approval

INSTITUTE OF ELECTRICAL AND ELECTRONICS ENGINEERS (IEEE)

IEEE 1374	(1998) Guide for Terrestrial Photovoltaic Power System Safety
IEEE 519	(1992; Erta 2004) Recommended Practices and Requirements for Harmonic Control in Electrical Power Systems
IEEE 1547	(2003; R 2008) Interconnecting Distributed Resources with Electric Power Systems

NATIONAL FIRE PROTECTION ASSOCIATION (NFPA)

NFPA 70	(2008; AMD 1 2008) National Electrical Code

UNDERWRITERS LABORATORIES (UL)

UL 1703	(2002; R 2008) Standard for Safety Flat-Plate Photovoltaic Modules and Panels
UL 1741	(2010) Standard for Safety Inverters, Converters, Controllers and Interconnection System Equipment for Use With Distributed Energy Resources

1.2 RELATED REQUIREMENTS

Provide two (2) complete solar photovoltaic grid-connected systems with a minimum combined capacity of 60 kW and a minimum calculated energy production of 65,000 kW-hour per year at 480/277 volts, 3-phase, 60 Hz. There will be no energy storage devices (e.g. batteries) used in these systems.

1.2.1 System I

System I shall consist of crystalline modules mounted on steel support structures located on the roof level mechanical systems area. Crystalline modules shall have an installed capacity of approximately 40 kW, providing DC power to a nominal 50 kW inverter located on the roof which will provide 480/277 volt AC power to the building electrical system at the service entrance switchboard.

1.2.2 System II

System II shall consist of thin film building integrated photovoltaic modules (BIPV) mounted between standing seams on a 5:12 slope standing seam metal roof. Thin film modules shall have an installed capacity of approximately 20 kW providing DC power to a nominal 20 kW inverter located on the roof which will provide 480/277 volt AC power to the building electrical system at the service entrance switchboard.

1.2.3 Electrical Equipment

All equipment and electrical hardware, including overcurrent protection, disconnects, surge suppression devices, conduit, wiring and terminals, shall be approved, recognized, or listed for the intended application by UL or other recognized laboratory, and have appropriate voltage, current and

temperature ratings for the application.

Inverters and PV modules shall have specific listings as noted elsewhere in this document. All circuit breakers, fuses and disconnects shall be listed or recognized for use in DC circuits where applicable. Equipment only rated for use in AC circuits will not be permitted for use in DC circuits.

1.3 SUBMITTALS

Government approval is required for submittals with a "G" designation; submittals not having a "G" designation are for Contractor Quality Control approval. The following shall be submitted in accordance with Section 01 33 00 SUBMITTAL PROCEDURES:

SD-02 Shop Drawings

Mounting Structure for Crystalline Modules; G

Submit shop drawings of each mounting structure for crystalline photovoltaic modules. Shop drawings shall include connection detail to roof.

Submit shop drawings showing layout of modules and support structures on roof. Shop drawings shall be similar to project drawings with module locations and arrangements adjusted to the actual installation.

SD-03 Product Data

Bill of Materials; G

For each major component listed in the Bill of Materials, a manufacturer's data sheet shall be submitted including, but not limited to, the following:

Crystalline Photovoltaic Modules; G

BIPV Modules; G

Inverters; G

Combiner Boxes; G

Mounting Structure for Crystalline Modules; G

SD-05 Design Data

System Performance Calculations; G

Mounting Structure Seismic and Wind Load Design Calculations; G

SD-06 Test Reports

Acceptance Checks and Tests; G

Submit reports of field testing.

SD-08 Manufacturer's Instructions

Submit manufacturer's installation instructions for each major system component including, but not limited to, the following:

Crystalline Photovoltaic Modules; G

BIPV Modules; G

Inverters; G

Combiner Boxes; G

SD-10 Operation and Maintenance Data

Submit in accordance with Section 01 78 23 OPERATION AND MAINTENANCE DATA as supplemented and modified by this specification section.

Provide six hardcopy manuals and three manuals on CD. The manuals shall include the manufacturer's name, model number, general description of the product, parts list, list of parts and tools that should be kept in stock by the owner for routine maintenance including the name of a local supplier, simplified wiring and controls diagrams, troubleshooting guide, and recommended service organization (including telephone number and address) for each item of equipment. Each service organization submitted shall be capable of providing a 4 hour on-site response to a service call on an emergency basis.

The following equipment (as a minimum) shall be included in these manuals:

Crystalline Photovoltaic Modules; G

BIPV Modules; G

Inverters; G

Combiner Boxes; G

SD-11 Closeout Submittals

As-Built Shop Drawings

Operator/Maintenance Training

Training Plan

1.4 QUALITY ASSURANCE

Submit a Bill of Materials listing each product being incorporated into the system. Bill of Materials shall include a general description of the product, quantity, and exact manufacturer's model number. Where the manufacturer's model number does not fully identify the product, list options, accessories, or custom features by additional descriptions.

1.4.1 Material and Equipment Qualifications

Provide materials and equipment that are standard products of companies regularly engaged in the manufacture of such products, and which are of a

similar material, design and workmanship. Standard products shall have been in satisfactory commercial or industrial use for at least two years prior to bid opening. The 2-year use shall include applications of equipment and materials under similar circumstances and of similar size. The product shall have been for sale on the commercial or industrial market through advertisements, manufacturer's catalogs, or brochures during the 2 year period.

1.4.2 Alternative Qualifications

Products having less than a two-year field service record will be acceptable if a certified record of satisfactory field operation for not less than 6000 hours, exclusive of manufacturer's factory or laboratory tests, can be shown.

1.4.3 Manufacturer's Nameplate

Each item of equipment shall have a nameplate bearing the manufacturer's name, address, model number and serial number securely affixed in a conspicuous place by permanent means; the nameplate of the distributing agent will not be acceptable.

PART 2 PRODUCTS

2.1 GENERAL

All series connected strings of modules shall include a series fuse. Parallel connections of modules in individual source circuits are not permitted. Parallel-connected cells within individual modules are allowable as long as the module listing allows for the series fuse required for this configuration.

All series connected strings of modules (source circuits) shall include a blocking diode to prevent reverse currents. These diodes shall have a voltage and current ratings (at temperature) at least twice the open-circuit voltage and short-circuit ratings of the source circuits from zero degrees F to 104 degrees F.

2.2 PERFORMANCE

Design the photovoltaic system to harvest the maximum amount of power possible for the site and equipment.

System components provided shall be selected to achieve a minimum calculated energy production of ___ kilowatt-hours per year.

Submit system performance calculations to show that the components provided will produce the minimum required production of power. Software packages "PV Watts" or "PV SOL" can be used as a starting point for these calculations.

2.2.1 Calculation Notes

The following entry values shall be used in calculations:

2.2.2 Flat Roof Crystalline Type PV

Location: Wilmington, North Carolina

Array Type: Fixed tilt

DC to AC De-rate Factor: Use "PV Watts" default derate factors except average actual inverter efficiency shall be used. Average inverter efficiency shall be calculated from the inverter efficiency at 80 percent, 60 percent, 40 percent and 20 percent loading.

Array Tilt: 15 degrees

Array Azimuth: 140 degrees (North = 0 degrees)

DC Rating: As installed; __ watts per module; __ modules per string; __ strings.

2.2.3 North Roof Thin Film Type PV

Location: Wilmington, North Carolina

Array Type: Fixed tilt

DC to AC Derate Factor: Default value; see Note 1 under Paragraph 2.2.3 Calculation Notes.

Array Tilt: 22.6 degrees

Array Azimuth: 320 degrees North = 0 degrees)

DC Rating: As installed; see Note 3 under Paragraph 2.2.3 Calculation Notes.

2.3 PHOTOVOLTAIC MODULE AND ARRAY SPECIFICATIONS

Photovoltaic modules shall be certified through the California Energy Commission's PV system certification program. The CEC provides a list of currently certified equipment on the Go Solar California site at http://www.gosolarcalifornia.ca.gov/equipment/index.html.

Provide equal sized arrays all of the same module model. Dimensions of the arrays may vary in accordance with the specific panels installed but must fit within the areas defined on the plans.

Each PV module shall include bypass diodes installed in the module junction box. For each PV module, the manufacturer shall provide a warranty for at least 90 percent of its rated power for 10 years and 80 percent of its rated power for 20 years from the date of system acceptance.

The PV modules' electrical characteristics including current-voltage (I - V) curves and temperature coefficients of module power, voltage, and current shall be characterized by a research laboratory such as the Florida Solar Energy Center, the National Renewable Energy Laboratory, Sandia National Laboratories, or Arizona State University.

Complete system shall comply with IEEE 1547.

2.3.1 Crystalline Photovoltaic Modules

PV modules shall be framed flat-plate crystalline/amorphous silicon modules. Crystalline modules shall be UL 1703 listed and comply with

IEC 61215.

2.3.2 BIPV Modules

PV thin film modules shall be Building-Integrated Photovoltaic (BIPV) modules designed to be installed between the seams of a standing seam roof. Modules shall be selected such that only connections at the low edge of the roof are required. One BIPV module shall be installed for each area between standing seams. BIPV modules shall be UL 1703 listed and comply with IEC 61646.

2.4 INVERTERS

Inverters shall be certified through the California Energy Commission's PV system certification program. The CEC provides a list of currently certified equipment on the Go Solar California site at http://www.gosolarcalifornia.ca.gov/equipment/index.html.

Provide a 3-phase inverter specifically designed for utility grid interconnection of photovoltaic arrays and capable of automatic, continuous, and stable operation over the range of voltages, currents, and power levels for the size and type of arrays used. Provide one inverter for each PV system.

Inverters shall be designed to be located outside. Enclosure shall be NEMA 3R minimum and unit shall be designed to operate in air temperatures up to 104 degrees Farenheit.

The inverters shall be listed under UL 1741. The inverters also shall comply with IEEE 519 and the latest applicable ANSI and FCC standards and addenda.

The inverters shall have an automatic visual indicator showing whether the system is on-line or not. The inverters shall not operate without the line voltage present. The inverters shall sense a "loss of line" (utility) condition and shall automatically disconnect from the line. The inverter restart shall occur automatically after restoration of line voltage and frequency for at least five minutes.

Inverters shall include an integral meter that will monitor and record the following:

a. DC amps

b. AC amps

c. DC volts

d. AC volts

e. Power kW-hour

Provide disconnect switches at both the input and output of each inverter. Disconnect switches may be integral to the inverter enclosure or separately mounted.

Inverters shall have a minimum 10-year manufacturer's warranty.

2.5 COMBINER BOXES

Combiner boxes shall have provisions for DC wiring from each array to be terminated and fused. Fused DC circuits shall be combined on a common DC output bus. Combiner boxes shall have a NEMA 3R enclosure.

2.6 MOUNTING STRUCTURE FOR CRYSTALLINE MODULES

Provide array support structures that provide the design panel tilt. Support structures shall be stable under wind speeds of up to 130 mph.

Support structures shall be suitable for Seismic Design Category B as defined by ICC IBC.

Submit mounting structure seismic and wind load design calculations showing that the support structure will meet these wind and seismic requirements while supporting the PV modules.

Provide the mechanical hardware for mounting the PV arrays and all other hardware required for assembling the PV modules and panels and structurally attaching them to the base support structure.

The PV array, including modules, hardware and attachments shall be designed to withstand wind loads of 130 mph and comply with all existing local and national codes.

Array mounting hardware shall be compatible with the site considerations and environment. Special attention shall be paid to minimizing the risk from exposed fasteners, sharp edges, and potential damage to the modules or support structure. Mechanical hardware shall be selected for corrosion resistance and durability. The use of stainless steel fasteners and a galvanized steel support structure is preferred. Wood or plastic components shall not be used for support. Galvanic corrosion shall be avoided.

2.6.1 Base Supports

Fabricated from cold rolled steel conforming to ASTM A 1008/A 1008M with internal deck fastening points. After fabrication, apply minimum 2-4 mil baked on powder coat primer. Coordinate height with thickness of roof insulation.

2.6.2 Flashing Boot

Fabricated from 26 gauge, 304 stainless steel conforming to ASTM A 666, robotically fuse welded at seams for precision fit over base support. Provide with base flange that extends a minimum of 4 inches (102 mm) onto the roof surface on all four sides. Coordinate height with base supports.

2.6.3 Base Cap

Cold-rolled steel conforming to ASTM A 1008/A 1008M. Fabricated to overlap base support and flashing boot a minimum of 2 inches (51 mm). After fabrication, finish with PVDF fluoropolymer, 1 mil, 2 coat, 70 percent, color white.

2.6.4 Base Cap Gasket

EPDM with self-adhesive closed cell foam.

2.6.5 Framing

Carbon steel structural tubing with a 2.5 inch (64 mm) outside diameter conforming to ASTM A 500/A 500M with an triple layer galvanized coating. Provide with wall thickness as determined by structural calculations.

2.6.6 Connector Fittings

Fabricated from cold-rolled steel conforming to ASTM A 1008/A 1008M. After fabrication, apply zinc plating conforming to ASTM B 633 Type 1, then baked on powder coating minimum 2-4 mil Dupont Black T6IC Polyester #PFB603S9.

2.6.7 Steel Z Section

Steel sheet conforming to ASTM A 653/A 653M, Class SS, with a G90 hot-dip galvanized coating.

2.6.8 Sheet Hat Channel

Steel sheet conforming to ASTM A 653/A 653M, Class SS, with a G90 hot-dip galvanized coating.

2.6.9 Hardware

Bolts, nuts, washers and screws, 18-8 stainless steel.

2.7 MOUNTING FOR BIPV MODULES

BIPV modules shall be mounted using adhesive and mounting hardware per the manufacturer's instructions.

PART 3 EXECUTION

3.1 ELECTRICAL INSTALLATION REQUIREMENTS

The electrical installation shall conform to NFPA 70 and in particular to Articles 90, 690, 705, and 720. The photovoltaic system shall comply with IEEE 1374.

All wiring shall be listed for a minimum operation of up to 600 volts and temperature rating of 90 degrees C, 194 degrees F, in wet locations. With the exception of the PV module interconnect wiring, the use of any exposed conductors or cabling (excluding grounds) is not acceptable. All conductors shall be installed in metallic conduit. All conduit installed outside shall be rigid galvanized steel.

PV module interconnect wiring shall be sunlight-resistant USE-2 or equivalent rated conductor, and shall be attached to module junction boxes using weather-tight strain relief. The module wiring interconnections shall use a connector device that allows quick assembly and disassembly of the arrays under no load conditions. These connectors shall be UL-listed and weather-sealed, guarded and polarity protected.

With the exception of module interconnect wiring, all terminations shall use listed box terminal or compression type connections, and must be made within an appropriate junction box or enclosure. Exposed field splices between conductors will not be permitted. Twist on wire splices, crimped, soldered or taped connections are not permitted for the required field

installed wiring of DC circuits. Proper torque specifications shall be followed for all of the required field connections, and all termination points shall be liberally coated with an anti-corrosion spray to preserve the quality of all connections over time.

All series connected strings of modules (source circuits) shall include a series fuse as required by UL and NFPA 70 to prevent excessive reverse current flow through modules in source circuits under fault conditions, and the diodes shall be contained in a listed junction/combiner box. All series source circuit fuses shall be rated for at least 1.56 times the source circuit short-circuit current rating, and no greater than that specified on the module listing. Blocking diodes for array source circuits shall have voltage and current ratings (at temperature) at least twice the open-circuit voltage and short-circuit ratings of the source circuits.

All metallic module frames, array support structures, metal enclosures, and the inverter cabinets shall be properly bonded to a common grounding conductor. All grounding connections and terminations should be made accessible for routine inspections and maintenance as required.

Surge suppression on the DC and AC side of the inverter shall be provided. Silicon oxide varistors (SOVs), or other surge protection as recommended, shall be provided by the inverter manufacturer.

All electrical equipment, enclosures, disconnects and overcurrent devices shall be clearly marked and identified.

3.2 MECHANICAL INSTALLATION REQUIREMENTS

All hardware required for installing PV arrays and other system equipment shall be provided for the installation. Following are requirements for mounting the PV arrays, equipment and other materials and mechanical design considerations.

a. The array mounting systems and overall installation shall meet all applicable local building codes and the requirements of ASCE/SEI 7-05, and be capable of withstanding hurricane force winds of 130 mph. Calculations or certifications from a licensed professional engineer or test lab verifying that the system can withstand these wind forces shall be submitted.

b. The system installation and equipment layout shall be considered with respect to the need for maintenance of the system as needed by the customer.

c. Array mounting hardware supplied for this installation shall be compatible with the site considerations and environment. Special attention shall be paid to minimizing the risk from exposed fasteners, sharp edges, and potential damage to the modules or support structure. All materials shall be selected to avoid corrosion and degradation.

d. This system will be a high profile, publicly visible installation from nearby buildings and the aesthetics of the overall installation is extremely important. To create a uniform appearance of the array, spacing between individual modules and panels should be kept to a minimum, and the overall layout kept consistent. As much as possible, all mechanical hardware, conduit, junction boxes and other equipment shall be concealed beneath and/or behind the arrays, and all other electrical work performed neatly and as inconspicuously as possible.

e. The array layout shall be consistent with the electrical ordering (and labeling) of source circuits in the array combiner box. Ease of access for array troubleshooting and maintenance shall be achieved by allowing access to the back of the array for module junction box servicing, and removal/replacement of individual source circuits (panels) and modules if necessary.

3.3 ACCEPTANCE CHECKS AND TESTS

Test and verify that the system has been installed properly and is performing as intended. Submit documentation of the testing and verification procedures performed. Testing and verification shall include, but not be limited to, the following:

a. Verify that non-current carrying metal parts are grounded properly (array frames, racks, metal boxes, etc. are connected to the grounding system).

b. Verify that all components are labeled.

c. Verify that mounting supports are installed properly, and all fasteners are installed and tightened.

d. Document the open circuit voltage of each string in full sunlight.

e. Verify the polarity of each string and ensure that they are properly connected and marked.

f. Record the output of the inverter. Measure the solar irradiance. From calculations, show that the output of the inverter is consistent with the expected performance. If the performance is not as expected, determine the cause and repair the system.

3.4 Operator/Maintenance Training

Upon completion of the work and at a time approved by the Contracting Officer, the Contractor shall provide instructions by a qualified instructor to the Government personnel in the proper operation and maintenance of the equipment. [_____] Government personnel shall receive training comparable to the equipment manufacturer's factory training. The duration of instruction shall be for not less than one 8 hour working day for instruction of operating/maintenance personnel.

3.4.1 Instructor's Qualifications

Instructors shall be regular employees of the photovoltaic system manufacturer. The instruction personnel provided to satisfy the requirements above shall be factory certified by the related equipment manufacturer to provide instruction services.

3.4.2 Training Plan

Submit training plan 30 calendar days prior to training sessions. Training plan shall include scheduling, content, outline, and training material (handouts).

SECTION 26 56 00

EXTERIOR LIGHTING
08/10

PART 1 GENERAL

1.1 REFERENCES

The publications listed below form a part of this specification to the extent referenced. The publications are referred to in the text by the basic designation only.

ALLIANCE FOR TELECOMMUNICATIONS INDUSTRY SOLUTIONS (ATIS)

ATIS ANSI O5.1	(2008) Wood Poles -- Specifications & Dimensions

AMERICAN ASSOCIATION OF STATE HIGHWAY AND TRANSPORTATION OFFICIALS (AASHTO)

AASHTO LTS-5	(2009; Errata 2009) Standard Specifications for Structural Supports for Highway Signs, Luminaires and Traffic Signals

AMERICAN NATIONAL STANDARDS INSTITUTE (ANSI)

ANSI C136.20	(2008) Roadway Lighting Equipment Fiber Reinforced-Plastic (FRP) Lighting Poles
ANSI C136.31	(2001) Roadway Lighting Equipment - Luminaire Vibration

AMERICAN WOOD PROTECTION ASSOCIATION (AWPA)

AWPA C1	(2003) All Timber Products - Preservative Treatment by Pressure Processes
AWPA C4	(2003) Poles - Preservative Treatment by Pressure Processes
AWPA M6	(2007) Brands Used on Forest Products

ASTM INTERNATIONAL (ASTM)

ASTM A 123/A 123M	(2009) Standard Specification for Zinc (Hot-Dip Galvanized) Coatings on Iron and Steel Products
ASTM A 153/A 153M	(2009) Standard Specification for Zinc Coating (Hot-Dip) on Iron and Steel Hardware
ASTM B 108/B 108M	(2008) Standard Specification for Aluminum-Alloy Permanent Mold Castings
ASTM B 117	(2009) Standing Practice for Operating

	Salt Spray (Fog) Apparatus
ASTM C 1089	(2006) Standard Specification for Spun Cast Prestressed Concrete Poles
ASTM E 2129	(2005) Standard Practice for Data Collection for Sustainability Assessment of Building Products
ASTM G 154	(2006) Standard Practice for Operating Fluorescent Light Apparatus for UV Exposure of Nonmetallic Materials

ILLUMINATING ENGINEERING SOCIETY OF NORTH AMERICA (IESNA)

IESNA HB-9	(2000; Errata 2004; Errata 2005; Errata 2006) IES Lighting Handbook
IESNA LM-79	(2008) Electrical and Photometric Measurements of Solid-State Lighting Products
IESNA LM-80	(2008) Measuring Lumen Maintenance of LED Light Sources
IESNA TM-15	(2007; Addendum 2009) Luminaire Classification System for Outdoor Luminaires
IESNA RP-8	(2000; Errata 2004; R 2005) Roadway Lighting

INSTITUTE OF ELECTRICAL AND ELECTRONICS ENGINEERS (IEEE)

IEEE 100	(2000; Archived) The Authoritative Dictionary of IEEE Standards Terms
IEEE C2	(2007; TIA 2007-1; TIA 2007-2; TIA 2007-3; TIA 2007-4; TIA 2007-5) National Electrical Safety Code
IEEE C62.41.2	(2002) Recommended Practice on Characterization of Surges in Low-Voltage (1000 V and Less) AC Power Circuits

INTERNATIONAL ELECTROTECHNICAL COMMISSION (IEC)

IEC 60068-2-14	(2009) Environmental testing - Part 2-14: Tests - Test N: Change of temperature - Edition 6.0
IEC 60068-2-30	(2009) Environmental Testing - Part 2-Part 2-30: Tests - Test Db: Damp heat, cyclic (12 h + 12 h cycle)
IEC 60529 CORR 3	(2009) Degrees of Protection Provided by Enclosures (IP Code) - Edition 2.1

NATIONAL ELECTRICAL MANUFACTURERS ASSOCIATION (NEMA)

ANSI ANSLG C78.41	(2006) For Electric Lamps--Guidelines for Low-Pressure Sodium Lamps
ANSI ANSLG C78.42	(2007) For Electric Lamps: High-Pressure Sodium Lamps
ANSI C136.10	(2006) American National Standard for Roadway and Area Lighting Equipment-Locking-Type Photocontrol Devices and Mating Receptacles--Physical and Electrical Interchangeability and Testing
ANSI C136.13	(2004; R 2009) American National Standard for Roadway Lighting Equipment, Metal Brackets for Wood Poles
ANSI C136.21	(2004; R 2009) American National Standard for Roadway and Area Lighting Equipment - Vertical Tenons Used with Post-Top-Mounted Luminaires
ANSI C136.3	(2005) American National Standard for Roadway and Area Lighting Equipment Luminaire Attachments
ANSI C78.1381	(1998) American National Standard for Electric Lamps - 250-Watt, 70 Watt, M85 Metal-Halide Lamps
ANSI C82.4	(2002) American National Standard for Ballasts for High-Intensity-Discharge and Low-Pressure Sodium (LPS) Lamps (Multiple-Supply Type)
ANSI/ANSLG C78.43	(2007) American National Standard for Electric Lamps - Single-Ended Metal-Halide Lamps
NEMA ANSLG C78.377	(2008) American National Standard for electric lamps— Specifications for the Chromaticity of Solid State Lighting Products
NEMA 250	(2008) Enclosures for Electrical Equipment (1000 Volts Maximum)
NEMA ICS 2	(2000; Errata 2006; R 2005; Errata 2008) Standard for Controllers, Contactors, and Overload Relays Rated 600 V
NEMA ICS 6	(1993; R 2001; R 2006) Standard for Enclosures
NEMA WD 7	(2000; R 2005) Occupancy Motion Sensors

NATIONAL FIRE PROTECTION ASSOCIATION (NFPA)

NFPA 70	(2008; AMD 1 2008) National Electrical Code

U.S. DEPARTMENT OF AGRICULTURE (USDA)

RUS Bull 1728F-700	(1993) REA Specification for Wood Poles, Stubs and Anchor Logs

U.S. ENVIRONMENTAL PROTECTION AGENCY (EPA)

Energy Star	(1992; R 2006) Energy Star Energy Efficiency Labeling System

U.S. FEDERAL COMMUNICATIONS COMMISSION (FCC)

FCC Part 15	Radio Frequency Devices (47 CFR 15)

UNDERWRITERS LABORATORIES (UL)

UL 1029	(1994; R 2001 thru 2009) Standard for High-Intensity-Discharge Lamp Ballasts
UL 1310	(2005) UL Standard for Safety Class 2 Power Units - Fifth Edition; Reprint with revisions through and including July 20, 2009
UL 1598	(2008; R 2006 thru 2010) Luminaires
UL 773	(1995; R 1994 thru 2002) Standard for Plug-In Locking Type Photocontrols for Use with Area Lighting
UL 773A	(2006) Standard for Nonindustrial Photoelectric Switches for Lighting Control
UL 8750	(2009) Standard for Safety Light Emitting Diode (LED) Equipment for Use in Lighting Products - First Edition

1.2 DEFINITIONS

a. Unless otherwise specified or indicated, electrical and electronics terms used in these specifications, and on the drawings, shall be as defined in IEEE 100.

b. Average life is the time after which 50 percent will have failed and 50 percent will have survived under normal conditions.

c. Groundline section is that portion between one foot above and 2 feet below the groundline.

d. Useful Life is the operating hours before reaching 70% of the initial rated lumen output point with no catastrophic failures under normal conditions.

1.3 SUBMITTALS

Government approval is required for submittals with a "G" designation; submittals not having a "G" designation are for information only or as otherwise designated. When used, a designation following the "G" designation identifies the office that will review the submittal for the Government. The following shall be submitted in accordance with Section 01 33 00 SUBMITTAL PROCEDURES:

SD-01 Preconstruction Submittals

Photometric Plan; G

Submit computer generated photometric analysis of proposed initial illuminance values, of the lighting installation using LLF values:of 1.0 and LLD values of 1.0. Submittal shall include the following:

Horizontal illuminance measurements at finished grade. Spacing between computer calculation points must be 10'

Vertical illuminance measurements at 5 foot above finished grade)

Minimum footcandle level

Maximum footcandle level

Average maintained footcandle level

Maximum and minimum ratio (Horizontal)

Warranty; G

LED Luminaire Warranty; G

SD-02 Shop Drawings

Luminaire drawings; G, [_____]

Poles; G, [_____]

SD-03 Product Data

[Local/Regional Materials

Submit documentation indicating distance between manufacturing facility and the project site. Indicate distance of raw material origin from the project site. Indicate relative dollar value of local/regional materials to total dollar value of products included in project.]

[Environmental Data]

Energy Efficiency

Luminaires; G, [_____]

LED Luminaires; G, [_____]

LED Luminaire Daylighting Controls; G

LED Luminaire Photocell Switch; G

LED Luminaire Time Switch; G

LED Luminaire Curfew Control; G

LED Luminaire Occupancy Sensor Controls; G

Lamps; G, [_____]

Ballasts; G, [_____]

Lighting contactor; G, [_____]

Time switch; G, [_____]

Photocell switch; G, [_____]

Concrete poles; G, [_____]

Aluminum poles; G, [_____]

Steel poles; G, [_____]

Fiberglass poles; G, [_____]

Brackets

[Auxiliary instant-on quartz system; G, [_____]]

[SD-04 Samples

Luminaires; G, [_____]

LED Luminaires; G, [_____]

Submit one sample of each luminaire type[, complete with lamp and ballast].[Submit one sample for each item other than luminaires.] Sample will be returned to the Contractor for installation in the project work.

] SD-05 Design Data

Design Data for luminaires; G, [_____]

Wind Loading Calculations, G

SD-06 Test Reports

LED Luminaire IESNA LM-79 Report; G

Submit report on manufacturer's standard production model luminaire. Submittal shall include:

Testing agency, report number, date, manufacturer's name, catalog number, LED driver, drive current, ambient temperature

Luminaire Efficacy (Lumens/watt), Minimum Light Output, Zonal Lumen Density

Color Qualities (CCT, CRI, Chromaticity)

Electrical Measurements (input voltage, input current, input power (watts))

Spectral Distribution over visible wavelengths (mW/nm)

Absolute Intensity Candlepower (cd) Summary table

Isocandela Plot

Luminance Summary table

Illuminance - Cone of Light Plot

Illuminance - Isofootcandle Plot

Illuminance - Roadway Isofootcandle Plot (if streetlight)

Picture of sample

IES File

LED Luminaire IESNA LM-80 Report; G

Submit report on manufacturer's standard production LED package, array, or module. Submittal shall include:

Testing agency, report number, date, type of equipment, and LED light source being tested.

All data required by IESNA LM-80

Test laboratories for the IESNA LM-79 and IESNA LM-80 reports shall be one of the following:

National Voluntary Laboratory Accreditation Program (NVLAP) accredited for solid-state lighting testing as part of the Energy-Efficient Lighting Products laboratory accreditation program.

One of the qualified labs listed on the DOE SSL web site (http://www1.eere.energy.gov/buildings/ssl/test_labs.html).

A manufacturer's in-house lab that meets the following criteria:

a. Manufacturer has been regularly engaged in the design and production of high intensity discharge roadway and area luminaires and the manufacturer's lab has been successfully certifying these fixtures for a minimum of 15 years,

b. Annual equipment calibration including photometer calibration in accordance with National Institute of Standards and Technology.

[Pressure treated wood pole quality]

[Tests for fiberglass poles; G, [_____]]

Operating test

Submit operating test results as stated in paragraph entitled "Field Quality Control."

SD-07 Certificates

Fixture Useful Life Certificate; G

Submit certification from the manufacturer indicating the expected useful life of the luminaires provided. The useful life shall be directly correlated to the IESNA LM-80 test data, adjusted for the thermal properties of manufacturer's luminaire, and adjusted for local average ambient operating conditions.

SD-08 Manufacturer's Instructions

Concrete poles

Submit instructions prior to installation.

Fiberglass poles

Submit instructions prior to installation.

SD-10 Operation and Maintenance Data

Operational Service

Submit documentation that includes contact information, summary of procedures, and the limitations and conditions applicable to the project. Indicate manufacturer's commitment to reclaim materials for recycling and/or reuse.

1.4 QUALITY ASSURANCE

1.4.1 Drawing Requirements

1.4.1.1 Luminaire Drawings

Include dimensions, effective projected area (EPA), accessories, and installation and construction details. Photometric data, including zonal lumen data, average and minimum ratio, aiming diagram, and[computerized] candlepower distribution data shall accompany shop drawings.

1.4.1.2 Poles

Include dimensions, wind load determined in accordance with AASHTO LTS-5, pole deflection, pole class, and other applicable information.[For concrete poles, include: section and details to indicate quantities and position of prestressing steel, spiral steel, inserts, and through holes; initial prestressing steel tension; and concrete strengths at release and at 28 days.]

[1.4.2 Pressure Treated Wood Pole Quality

Ensure the quality of pressure treated wood poles. Furnish an inspection

report (for wood poles) of an independent inspection agency, approved by the Contracting Officer, stating that offered products comply with AWPA M6 and RUS Bull 1728F-700 standards. The RUS approved Quality Mark "WQC" on each pole will be accepted, in lieu of inspection reports, as evidence of compliance with applicable AWPA treatment standards.

]1.4.3 Design Data for Luminaires

a. Distribution data according to IESNA classification type as defined in IESNA HB-9.

b. Computerized horizontal illumination levels in footcandles at ground level, taken every [10][20][_____] feet. Include average maintained footcandle level and maximum and minimum ratio. Provide Photometric Plan for project.

c. Shielding as defined by IESNA RP-8 or B.U.G. rating as defined by IESNA TM-15.

d. Provide safety certification and file number for the luminaire family. Include listing, labeling and identification per NFPA 70 (NEC). Applicable testing bodies are determined by the US Occupational Safety Health Administration (OSHA) as Nationally Recognized Testing Laboratories (NRTL) and include: CSA (Canadian Standards Association), ETL (Edison Testing Laboratory), and UL (Underwriters Laboratory).

[1.4.4 Tests for Fiberglass Poles

a. Ultraviolet resistance tests: Perform according to ASTM G 154 using a UV-B lamp having a 313 nanometer wavelength, operated at 130 degrees F, cycling the lamp on for 4 hours and off for 4 hours for a total test period of 1500 hours minimum with the following results:

Fiber exposure:	None
Crazing:	None
Checking:	None
Chalking:	None
Color:	May dull slightly

b. Flexural strength and deflection test: Test loading shall be as a cantilever beam with pole butt as fixed end and a force simulating wind load at the free end.

]1.4.5 Regulatory Requirements

In each of the publications referred to herein, consider the advisory provisions to be mandatory, as though the word, "shall" had been substituted for "should" wherever it appears. Interpret references in these publications to the "authority having jurisdiction," or words of similar meaning, to mean the Contracting Officer. Equipment, materials, installation, and workmanship shall be in accordance with the mandatory and advisory provisions of NFPA 70 unless more stringent requirements are specified or indicated.

1.4.6 Standard Products

Provide materials and equipment that are products of manufacturers regularly engaged in the production of such products which are of equal material, design and workmanship. Products shall have been in satisfactory

commercial or industrial use for 2 years prior to bid opening. The 2-year period shall include applications of equipment and materials under similar circumstances and of similar size. The product shall have been on sale on the commercial market through advertisements, manufacturers' catalogs, or brochures during the 2-year period. Where two or more items of the same class of equipment are required, these items shall be products of a single manufacturer. Component parts of the item shall be the products of the same manufacturer, unless stated otherwise in this section.

1.4.6.1 Alternative Qualifications

Products having less than a 2-year field service record will be acceptable if the manufacturer has been regularly engaged in the design and production of high intensity discharge roadway and area luminaires for a minimum of 15 years. Products shall have been in satisfactory commercial or industrial use for 15 years prior to bid opening. The product shall have been on sale on the commercial market through advertisements, manufacturers' catalogs, or brochures during the 15-year period.

1.4.6.2 Material and Equipment Manufacturing Date

Products manufactured more than 1 year prior to date of delivery to site shall not be used, unless specified otherwise.

1.5 DELIVERY, STORAGE, AND HANDLING

[1.5.1 Wood Poles

Stack poles stored for more than 2 weeks on decay-resisting skids arranged to support the poles without producing noticeable distortion. Store poles to permit free circulation of air; the bottom poles in the stack shall be at least one foot above ground level and growing vegetation. Do not permit decayed or decaying wood to remain underneath stored poles. Do not drag treated poles along the ground. Do not use pole tongs, cant hooks, and other pointed tools capable of producing indentation more than one inch in depth in handling the poles. Do not apply tools to the groundline section of any pole.

][1.5.2 Concrete Poles

Do not store poles on ground. Support poles so they are at least one foot above ground level and growing vegetation.

][1.5.3 Fiberglass Poles

Do not store poles on ground. Support poles so they are at least one foot above ground level and growing vegetation. Do not remove factory-applied pole wrappings until just before installing pole.

][1.5.4 [Aluminum][Steel]Poles

Do not store poles on ground. Support poles so they are at least one foot above ground level and growing vegetation. Do not remove factory-applied pole wrappings until just before installing pole.

]1.6 SUSTAINABLE DESIGN REQUIREMENTS

1.6.1 Local/Regional Materials

Use materials or products extracted, harvested, or recovered, as well as manufactured, within a [500][_____] mile radius from the project site, if available from a minimum of three sources.

1.6.2 Environmental Data

[Submit Table 1 of ASTM E 2129 for the following products: [_____].]

1.6.3 Energy Efficiency

Comply with National Energy Policy Act. [Comply with Energy Star requirements for the following lighting products: [___]].

1.7 WARRANTY

The equipment items shall be supported by service organizations which are reasonably convenient to the equipment installation in order to render satisfactory service to the equipment on a regular and emergency basis during the warranty period of the contract.

1.7.1 LED Luminaire Warranty

Life of exterior LED lighting (primarily the luminaire) is not yet well understood given the relative newness of the technology for this application. Projected life of LED luminaires is a key component to payback scenarios in project evaluations, therefore it is very important that products perform as anticipated. Since life claims provided by suppliers is typically 50,000 hours or greater and the first cost of exterior LED luminaires may be significant, site Warranty shall assure that the product will perform as claimed in terms of useful life. Provide Fixture Useful Life Certificate.

The equipment items shall be supported by service organizations which are reasonably convenient to the equipment installation in order to render satisfactory service to the equipment on a regular and emergency basis during the warranty period of the contract.

a. Provide a written five year on-site replacement material, fixture finish, and workmanship. On-site replacement includes transportation, removal, and installation of new products. Finish warranty shall include warranty against failure and against substantial deterioration such as blistering, cracking, peeling, chalking, or fading.

b. Provide a written five year on-site replacement material warranty when more than 10% of LED sources in any lightbar or subassembly(s) are defective or non-starting.

c. Provide a written five-year on-site replacement material warranty on all power supply units (PSUs).

d. Warranty period must begin on date of beneficial occupancy. Contractor shall provide the Contracting Officer signed warranty certificates prior to final payment.

1.8 POWER SOURCE

[Use a photovoltaic power source.]

1.9 OPERATIONAL SERVICE

Coordinate with manufacturer for [maintenance agreement] [take-back program]. Collect information from the manufacturer about [maintenance agreement] [green lease] options, and submit to Contracting Officer. Services shall reclaim materials for recycling and/or reuse. Services shall not landfill or burn reclaimed materials. Indicate procedures for compliance with regulations governing disposal of mercury. When such a service is not available, local recyclers shall be sought after to reclaim the materials.

PART 2 PRODUCTS

2.1 PRODUCT COORDINATION

Products and materials not considered to be lighting equipment or lighting fixture accessories are specified in[Section 33 71 02.00 20 UNDERGROUND ELECTRICAL DISTRIBUTION,] Section 33 71 01 OVERHEAD TRANSMISSION AND DISTRIBUTION,[Section 33 70 02.00 10 UNDERGROUND TRANSMISSION AND DISTRIBUTION SYSTEM, UNDERGROUND,][and] Section 26 20 00 INTERIOR DISTRIBUTION SYSTEM.[Lighting fixtures and accessories mounted on exterior surfaces of buildings are specified in Section 26 51 00 INTERIOR LIGHTING.]

2.2 LUMINAIRES

UL 1598 and UL 8750. Provide luminaires as indicated. Provide luminaires complete with lamps of number, type, and wattage indicated. Details, shapes, and dimensions are indicative of the general type desired, but are not intended to restrict selection to luminaires of a particular manufacturer. Luminaires of similar designs, light distribution and brightness characteristics, and of equal finish and quality will be acceptable as approved.

2.2.1 Lamps

2.2.1.1 High-Pressure Sodium (HPS) Lamps

ANSI ANSLG C78.42. Wattage as indicated. HPS lamps shall have average rated life of 16,000 hours (minimum) for 35 watt lamps and 24,000 hours (minimum) for all higher wattage lamps. 150 watt lamps, if required, shall be 55 volt lamps. Lamps shall have Luminaire Efficiency Ratings (LER) as follows:

a. Upward efficiency of 0%

1. 150-399 watts: minimum 58 LER for closed fixture; minimum 68 for open fixture

2. 400-999 watts: minimum 63 LER for closed fixture; minimum 84 for open fixture

b. Upward efficiency of 1%-10%

1. 150-399 watts: minimum 64 LER for closed fixture; minimum 63 for

open fixture

2. 400-999 watts: minimum 82 LER for closed fixture; minimum 89 for open fixture

3. 1000+ watts: minimum 109 LER for open fixture

c. Upward efficiency of 11% to 20%

1. 150-399 watts: minimum 78 LER for open fixture

2. 400-999 watts: minimum 94 for open fixture

d. Upward efficiency greater than 20%

1. 150-399 watts: minimum 75 LER for closed fixture; minimum 77 for open fixture

[2.2.1.2 Standby HPS Lamps

ANSI ANSLG C78.42. Wattage as indicated. Standby HPS lamps shall have two arc tubes and an average rated life of 40,000 hours (minimum). Hot restart instant lumen output shall be 8 percent, minimum, of total light output. 150 watt lamps, if required, shall be 55 volt type.

][2.2.1.3 Low-Pressure Sodium (LPS) Lamps

ANSI ANSLG C78.41.

][2.2.1.4 Metal-Halide Lamps

Provide luminaires with tempered glass lens.

[a. Double-ended, 70 watt, conforming to ANSI C78.1381]

[b. Single-ended, wattage as indicated, conforming to ANSI/ANSLG C78.43]

Lamps shall have Luminaire Efficiency Ratings (LER) as follows:

a. Upward efficiency of 0%

1. 150-399 watts: minimum 41 LER for closed fixture

2. 400-999 watts: minimum 53 LER for closed fixture; minimum 59 for open fixture

3. 1000+ watts: minimum 77 LER for closed fixture

b. Upward efficiency of 1%-10%

1. 150-399 watts: minimum 56 LER for closed fixture

2. 400-999 watts: minimum 62 LER for closed fixture; minimum 64 for open fixture

3. 1000+ watts: minimum 88 LER for open fixture

c. Upward efficiency greater than 20%

1. 150-399 watts: minimum 62 LER for closed fixture; minimum 77 for open fixture

2. 400-999 watts: minimum 65 LER for closed fixture

]2.2.2 Ballasts for High-Intensity-Discharge (HID) Luminaires

UL 1029 and ANSI C82.4, and shall be constant wattage autotransformer (CWA) or regulator, high power-factor type (minimum 90%). Provide single-lamp ballasts which shall have a minimum starting temperature of minus 30 degrees C. Ballasts shall be:

a. Designed to operate on voltage system to which they are connected.

b. Constructed so that open circuit operation will not reduce the average life.

HID ballasts shall have a solid-state igniter/starter with an average life in the pulsing mode of 10,000 hours at the intended ambient temperature. Igniter case temperature shall not exceed 90 degrees C.

2.3 LED LUMINAIRES

UL 1598 and UL 8750. Provide luminaires as indicated. Provide luminaires complete with lamps of number, type, and wattage indicated. Details, shapes, and dimensions are indicative of the general type desired, but are not intended to restrict selection to luminaires of a particular manufacturer. Luminaires of similar designs, light distribution and brightness characteristics, and of equal finish and quality will be acceptable as approved.

2.3.1 General Requirements

a. Luminaire shall be UL-listed for wet locations and wiring cavity must be field accessible for service or repair needs.

b. Luminaire shall be full cutoff or fully shielded as defined by IESNA RP-8. Alternatively, the full cutoff can be validated by meeting the following IESNA TM-15 B-U-G Ratings (backlight, uplight, and glare):

(1) Maximum uplight (U) rating of U1.

(2) Maximum glare (G) rating equal to G2.

c. Optical system for roadway and area luminaires shall be sealed and rated for IP 66 as defined in IEC 60529 CORR 3.

d. Luminaire shall be fully assembled and electrically tested prior to shipment from factory.

e. For all mast arm mounted luminaires, a wildlife shield shall be included in the fixture to prevent wildlife access to the fixture.

f. Color of the luminaire shall be bronze unless specified otherwise.

g. The coating must be capable of surviving ASTM B 117 Salt Fog environment for 1000 hrs minimum without blistering or peeling.

h. The coating shall demonstrate gloss retention of greater than or equal to 90% for 1000 hrs exposure QUV test per ASTM G 154 UVB-313 Lamps, 4 hr Condensation 50 °C.

i. Luminaire shall be tested according to IEC 60068-2-14 for thermal shock. Luminaire shall be fully functional after completion of testing.

j. Luminaire shall be tested according to IEC 60068-2-30, damp heat, steady state, for high humidity and high temperatures. Luminaire shall be fully functional after testing.

k. Luminaire arm bolts shall be 304 stainless steel or zinc plated steel.

l. If a lens not integral to the LED is used, construct the luminaire optical enclosure (lens/window) of clear and UV-resistant acrylic or tempered glass.

m. 80% of the luminaire material by weight should be recyclable at end of life.

n. Produce a minimum efficacy of 60 lumens per Watt driven at 350mA or a minimum of 50 lumens per Watt driven at 525mA tested per IESNA LM-79. Theoretical models of initial raw LED lumens per watt are not acceptable.

o. Incorporate modular electrical connections and construct luminaire to allow replacement of all or any part of the optics, heat sinks, power supply units, and electrical components using only a simple tool, such as a screwdriver.

p. Luminaire shall have a nameplate bearing the manufacturer's name, address, model number, date of manufacture, and serial number securely affixed in a conspicuous place; the nameplate of the distributing agent will not be acceptable.

q. Fixture weight and effective projected area (EPA) shall not exceed the pole requirements for wind loading. Provide wind loading calculations.

r. Roadway and area luminaires shall have an integral tilt adjustment of +/- 5° to allow the unit to be leveled, in accordance with ANSI C136.3.

s. Luminaire must pass 3G vibration testing in accordance with ANSI C136.31.

t. Provide LED Luminaire IESNA LM-79 Report and LED Luminaire IESNA LM-80 Report.

2.3.2 Wiring

All factory electrical connections shall be made using crimp, locking, or latching style connectors. Twist style wire nuts are not acceptable.

2.3.3 Power Supply Units

Power Supply Unit (PSU) including drivers shall meet the following requirements:

a. Minimum efficiency of 85%.

b. Drive current per LED shall not exceed 525mA ±10%.

c. Rated to operate between ambient temperatures of -30°C and [+40°C] [+50°C].

d. Designed to operate on voltage system to which they are connected ranging from 120 V to 277 V nominal.

e. UL 1310 Class 2 Compliant.

f. Operating frequency: 50/60 Hz.

g. Power Factor (PF): Greater than or equal to 0.90.

h. Total Harmonic Distortion (THD) current: Less than or equal to 20%.

i. FCC Part 15 Class B.

j. Reduction of Hazardous Substances (RoHS) compliant.

k. Luminaires under a covered structure such as canopies shall be UL listed Class P with a sound rating of "A."

[l. Driver shall be dimmable.]

2.3.4 LED Light Source

a. Luminaires must be rated for operation in ambient temperatures of -30°C to [+40°C] [+50°C].

b. Correlated Color Temperature (CCT) shall be in accordance with NEMA ANSLG C78.377.

[Nominal CCT: 3000 K 3045 ± 175 K or Nominal CCT 3500 K: 3465 ± 245 K]

[Nominal CCT: 4000 K: 3985 ± 275 K or Nominal CCT 4500 K: 4503 ± 243 K]

[Nominal CCT 5000 K: 5028 ± 283 K or Nominal CCT 5700 K: 5665 ± 355]

[Nominal CCT: 6500 K: 6530 ± 510 K]

c. Color Rendering Index (CRI) shall be:

[Greater than or equal to 80 for 3000 K - 3500 K]

[Greater than or equal to 70 for 4000 K - 6500 K]

2.3.5 Surge Protection

Provide surge protection integral to luminaire to meet "C Low" waveforms as defined in IEEE C62.41.2, Scenario 1 Location Category C.

2.3.6 LED Luminaire Daylighting Controls

All exterior parking lot, drive, and front aisle areas shall be controlled with a combination photocell plus time switch control system that allows automatic on and off settings based on daylighting, plus timed off settings after expected parking lot activity ends. LED Luminaire Photocell Switch is used to energize all luminaires at dusk, and to switch-off any security

lighting left on overnight by the time switch.

2.3.7 LED Luminaire Photocell Switch

UL 773 or UL 773A, hermetically sealed cadmium-sulfide or silicon diode type cell, rated [_____] volts ac, 60 Hz, with[single-throw contacts][single pole double-throw (spdt) contacts for mechanically held contactors rated [1000][1800] watts] designed to fail to the ON position. Switch shall turn on at or below 32 lux (3 footcandles) and off at 43 to 107 lux (4 to 10 footcandles). A time delay shall prevent accidental switching from transient light sources. [Provide a directional lens in front of the cell to prevent fixed light sources from creating a turnoff condition.] Provide switch:

a. Compliant with Reduction of Hazardous Substances (RoHS).

b. Utilizing an ambient light sensing technology which inherently minimizes the contribution of typical high power LED light sources to the sensed light level.

c. With a rated life expectancy of 90,000 hours continuous operation.

d. [In a high-impact-resistant, noncorroding and nonconductive molded plastic housing with a [fixture mounted] locking-type receptacle conforming to ANSI C136.10 and rated 1800 VA, minimum.]

e. [In a cast weatherproof aluminum housing with adjustable window slide, rated 1800 VA, minimum.]

f. [In a U.V. stabilized polycarbonate housing with swivel arm and adjustable window slide, rated 1800 VA, minimum.]

g. [Integral to the luminaire, rated 1000 VA, minimum.]

2.3.8 LED Luminaire Time Switch

Astronomic dial type or electronic type, arranged to turn "ON" at sunset, and turn "OFF" at predetermined time between 8:30 p.m. and 2:30 a.m. or sunrise, automatically changing the settings each day in accordance with seasonal changes of sunset and sunrise. Provide switch rated [_____] volts, having automatically wound spring mechanism or capacitor, to maintain accurate time for a minimum of 7 hours following power failure. Provide time switch with a manual on-off bypass switch. Housing for the time switch shall be surface mounted, NEMA [3R][_____] enclosure conforming to NEMA ICS 6.

[2.3.9 LED Luminaire Curfew Control

Provide an optional curfew control, in addition to the photocell switch and timeswitch control system. Curfew Control shall include after hours dimming control to reduce light levels to approximately [50%] [___] of full lumen output at a predetermined time. This time setting will normally be after expected parking lot activity ends. Design controls to fail to the ON position.

][2.3.10 LED Luminaire Occupancy Sensor Controls

NEMA WD 7, UL 773A. Provide passive infrared or microwave sensor with 360° coverage, time delay that can be adjusted from 30 seconds to 30 minutes,

and designed to fail to the ON position. Sensors shall be located to achieve coverage of areas indicated. Coverage patterns shall be derated as recommended by manufacturer based on mounting height of sensor and any obstructions such as trees. Do not use gross rated coverage in manufacturer's product literature. Sensors integral to the luminaire must be provided by luminaire manufacturer.

a. Infrared: Integral to the luminaire. Shall detect occupancy by changes in infrared energy within a coverage area and shall be capable of operating between -40°C and +50°C.

b. Microwave: Integral to luminaire. Shall detect occupancy by transmitting electromagnetic energy into a coverage area, receiving direct and reflected energy, and monitoring frequency shift between transmitted and received signals. When more than one device is used in an area, devices shall operate on different frequencies. Provide for selective filtering by the sensor to minimize nuisance tripping due to interference from radar, or other sources of electronic interference.

]2.4 LIGHTING CONTACTOR

NEMA ICS 2,[electrically][mechanically] held contactor.[Contacts shall be rated [_____] volts, [_____] amperes, and [_____] poles. Coils shall be rated [_____] volts.][Rate contactor as indicated.] Provide in NEMA[4][_____] enclosure conforming to NEMA ICS 6. Contactor shall have silver alloy double-break contacts [and coil clearing contacts for mechanically held contactor] and shall require no arcing contacts.[Provide contactor with[hand-off-automatic][on-off] selector switch.][Contactor shall be hermetically sealed.]

2.5 TIME SWITCH

Astronomic dial type or electronic type, arranged to turn "ON" at sunset, and turn "OFF" at predetermined time between 8:30 p.m. and 2:30 a.m. or sunrise, automatically changing the settings each day in accordance with seasonal changes of sunset and sunrise. Provide switch rated [_____] volts, having automatically wound spring mechanism or capacitor, to maintain accurate time for a minimum of 7 hours following power failure. Provide time switch with a manual on-off bypass switch. Housing for the time switch shall be surface mounted, NEMA [3R][_____] enclosure conforming to NEMA ICS 6.

2.6 PHOTOCELL SWITCH

UL 773 or UL 773A, hermetically sealed cadmium-sulfide or silicon diode type cell rated [_____] volts ac, 60 Hz with[single-throw contacts][single pole double-throw (spdt) contacts for mechanically held contactors rated 1000 watts] designed to fail to the ON position. Switch shall turn on at or below 3 footcandles and off at 4 to 10 footcandles. A time delay shall prevent accidental switching from transient light sources.[Provide a directional lens in front of the cell to prevent fixed light sources from creating a turnoff condition.] Provide switch:

[a. In a high-impact-resistant, noncorroding and nonconductive molded plastic housing with a[fixture mounted,] locking-type receptacle conforming to ANSI C136.10 and rated 1800 VA, minimum.]

[b. In a cast weatherproof aluminum housing with adjustable window slide, rated 1800 VA, minimum.]

[c. In a U.V. stabilized polycarbonate housing with swivel arm and adjustable window slide, rated 1800 VA, minimum.]

[d. Integral to the luminaire, rated 1000 VA, minimum.]

2.7 POLES

Provide poles designed for wind loading of [100][_____] miles per hour determined in accordance with AASHTO LTS-5 while supporting luminaires and all other appurtenances indicated. The effective projected areas of luminaires and appurtenances used in calculations shall be specific for the actual products provided on each pole. Poles shall be[embedded][anchor]-base type designed for use with[underground][overhead] supply conductors.[Poles[, other than wood poles,] shall have oval-shaped handhole having a minimum clear opening of 2.5 by 5 inches. Handhole cover shall be secured by stainless steel captive screws.][Metal poles shall have an internal grounding connection accessible from the handhole near the bottom of each pole.] Scratched, stained, chipped, or dented poles shall not be installed.

2.7.1 Concrete Poles

Provide concrete poles conforming to ASTM C 1089. Cross-sectional shape shall be[round][or][multi-sided].

2.7.1.1 Steel Reinforcing

Prestressed concrete pole shafts shall be reinforced with steel prestressing members. Design shall provide internal longitudinal loading by either pretensioning or post tensioning of longitudinal reinforcing members.

2.7.1.2 Tensioned Reinforcing

Primary reinforcement steel used for a prestressed concrete pole shaft shall be tensioned between 60 to 70 percent of its ultimate strength. The amount of reinforcement shall be such that when reinforcement is tensioned to 70 percent of its ultimate strength, the total resultant tensile force does not exceed the minimum section compressive strength of the concrete.

2.7.1.3 Coating and Sleeves for Reinforcing Members

Where minimum internal coverage cannot be maintained next to required core openings, such as handhole and wiring inlet, reinforcing shall be protected with a vaporproof noncorrosive sleeve over the length without the 1/2 inch concrete coverage. Each steel reinforcing member which is to be post-tensioned shall have a nonmigrating slipper coating applied prior to the addition of concrete to ensure uniformity of stress throughout the length of such member.

2.7.1.4 Strength Requirement

As an exception to the requirements of ASTM C 1089, poles shall be naturally cured to achieve a 28-day compressive strength of 7000 psi. Poles shall not be subjected to severe temperature changes during the curing period.

2.7.1.5 Shaft Preparation

Completed prestressed concrete pole shaft shall have a hard, smooth, nonporous surface that is resistant to soil acids, road salts, and attacks of water and frost, and shall be clean, smooth, and free of surface voids and internal honeycombing. Poles shall not be installed for at least 15 days after manufacture.

2.7.2 Aluminum Poles

Provide aluminum poles manufactured of corrosion resistant aluminum alloys conforming to AASHTO LTS-5 for Alloy 6063-T6 or Alloy 6005-T5 for wrought alloys and Alloy 356-T4 (3,5) for cast alloys. Poles shall be seamless extruded or spun seamless type with minimum 0.188 inch wall thickness. Provide a pole grounding connection designed to prevent electrolysis when used with copper ground wire. Tops of shafts shall be fitted with a round or tapered cover. Base shall be anchor bolt mounted, made of cast 356-T6 aluminum alloy in accordance with ASTM B 108/B 108M and shall be machined to receive the lower end of shaft. Joint between shaft and base shall be welded. Base cover shall be cast 356-T6 aluminum alloy in accordance with ASTM B 108/B 108M. Hardware, except anchor bolts, shall be either 2024-T4 anodized aluminum alloy or stainless steel.[Aluminum poles and brackets for [walkway][_____] lighting shall have a[uniform satin][dark anodic bronze][_____] finish to match fixtures and shall not be painted.] Manufacturer's standard provision shall be made for protecting the finish during shipment and installation. Minimum protection shall consist of spirally wrapping each pole shaft with protective paper secured with tape, and shipping small parts in boxes.

2.7.3 Steel Poles

AASHTO LTS-5. Provide steel poles having minimum 11-gage steel with minimum yield/strength of 48,000 psi and[hot-dipped galvanized in accordance with ASTM A 123/A 123M][iron-oxide primed] factory finish. Provide a pole grounding connection designed to prevent electrolysis when used with copper ground wire. Pole shall be[direct set][anchor bolt mounted] type. Poles shall have tapered tubular members, either round in cross section or polygonal.[Pole shafts shall be one piece. Poles shall be welded construction with no bolts, rivets, or other means of fastening except as specifically approved.] Pole markings shall be approximately 3 to 4 feet above grade and shall include manufacturer, year of manufacture, top and bottom diameters, and length.[Base covers for steel poles shall be structural quality hot-rolled carbon steel plate having a minimum yield of 36,000 psi.]

2.7.4 Wood Poles

ATIS ANSI O5.1 and RUS Bull 1728F-700 of[Southern Yellow Pine][Douglas Fir][_____]. Poles shall be gained, bored, and roofed before treatment. Poles shall be treated full length with chromated copper arsenate (CCA) or ammoniacal copper arsenate (ACA) according to AWPA C1 and AWPA C4 as referenced in RUS Bull 1728F-700. Poles shall be branded by manufacturer with manufacturer's mark and date of treatment, height and class of pole, wood species, preservation code, and retention. Place the brand so that the bottom of the brand or disc is 10 feet from the pole butt for poles up to 50 feet long[and 14 feet from the butt for poles over 50 feet long].

2.7.5 Fiberglass Poles

ANSI C136.20. Designed specifically for supporting luminaires and having factory-formed cable entrance and handhole. Resin color shall be[dark bronze][as indicated][_____], and pigment shall provide uniform coloration throughout entire wall thickness. Finish surface shall be pigmented polyurethane having a minimum dry film thickness of 1.5 mils. Polyurethane may be omitted if the surface layer of the pole is inherently ultraviolet inhibited. Minimum fiberglass content shall be 65 percent with resin and pigment comprising the other 35 percent material content.

2.8 BRACKETS AND SUPPORTS

ANSI C136.3, ANSI C136.13, and ANSI C136.21, as applicable. Pole brackets shall be not less than 1 1/4 inch[galvanized steel pipe][aluminum] secured to pole. Slip-fitter or pipe-threaded brackets may be used, but brackets shall be coordinated to luminaires provided, and brackets for use with one type of luminaire shall be identical. Brackets for pole-mounted street lights shall correctly position luminaire no lower than mounting height indicated. Mount brackets not less than 24 feet above street. Special mountings or brackets shall be as indicated and shall be of metal which will not promote galvanic reaction with luminaire head.

2.9 POLE FOUNDATIONS

Anchor bolts shall be steel rod having a minimum yield strength of 50,000 psi; the top 12 inches of the rod shall be galvanized in accordance with ASTM A 153/A 153M. Concrete shall be as specified in[Section 03 30 00 CAST-IN-PLACE CONCRETE][Section 03 31 00.00 10 CAST-IN-PLACE STRUCTURAL CONCRETE].

[2.10 AUXILIARY INSTANT-ON QUARTZ SYSTEM

UL listed, automatically switched instant-on[150][250]-watt[quartz][_____] lamp. Quartz lamp shall come on when the luminaire is initially energized and immediately after a momentary power outage, and remain on until HID lamp reaches approximately 60 percent light output. Wiring for quartz lamp shall be internal to ballast and independent of incoming line voltage to the ballast.[Provide instant-on quartz system for each HID fixture.][Provide instant-on quartz system as indicated.]

]2.11 EQUIPMENT IDENTIFICATION

2.11.1 Manufacturer's Nameplate

Each item of equipment shall have a nameplate bearing the manufacturer's name, address, model number, and serial number securely affixed in a conspicuous place; the nameplate of the distributing agent will not be acceptable.

2.11.2 Labels

Provide labeled luminaires in accordance with UL 1598 requirements. Luminaires shall be clearly marked for operation of specific lamps and ballasts according to proper lamp type. The following lamp characteristics shall be noted in the format "Use Only _____":

a. Lamp diameter code (T-4, T-5, T-8, T-12), tube configuration (twin, quad, triple), base type, and nominal wattage for fluorescent and

compact fluorescent luminaires.

b. Lamp type, wattage, bulb type (ED17, BD56, etc.) and coating (clear or coated) for HID luminaires.

c. Start type (preheat, rapid start, instant start) for fluorescent and compact fluorescent luminaires.

d. ANSI ballast type (M98, M57, etc.) for HID luminaires.

e. Correlated color temperature (CCT) and color rendering index (CRI) for all luminaires.

Markings related to lamp type shall be clear and located to be readily visible to service personnel, but unseen from normal viewing angles when lamps are in place. Ballasts shall have clear markings indicating multi-level outputs and indicate proper terminals for the various outputs.

2.12 FACTORY APPLIED FINISH

Electrical equipment shall have factory-applied painting systems which shall, as a minimum, meet the requirements of NEMA 250 corrosion-resistance test.

PART 3 EXECUTION

3.1 INSTALLATION

Electrical installations shall conform to IEEE C2, NFPA 70, and to the requirements specified herein.

[3.1.1 Wood Poles

Pole holes shall be at least as large at the top as at the bottom and shall be large enough to provide 4 inches of clearance between the pole and the side of the hole.

a. Setting depth: Pole setting depths shall be as follows:

Length of Pole (feet)	Setting in Soil (feet)
20	5.0
25	5.5
30	5.5
35	6.0
40	6.0
45	6.5
50	7.0
55	7.5
60	8.0

b. Soil setting: "Setting in Soil" depths shall apply where pole holes are in soil, sand, or gravel or any combination of these.[At corners, dead ends and other points of extra strain, poles 40 feet long or more shall be set 6 inches deeper.]

c. Setting on sloping ground: On sloping ground, measure the depth of the hole from the low side of the hole.

d. Backfill: Tamp pole backfill for the full depth of the hole and mound the excess fill around the pole.

][3.1.2 Concrete Poles

Install according to pole manufacturer's instructions.

][3.1.3 Fiberglass Poles

Install according to pole manufacturer's instructions.

][3.1.4 [Aluminum][Steel] Poles

Provide pole foundations with galvanized steel anchor bolts, threaded at the top end and bent 90 degrees at the bottom end. Provide ornamental covers to match pole and galvanized nuts and washers for anchor bolts. Concrete for anchor bases, polyvinyl chloride (PVC) conduit ells, and ground rods shall be as specified in Section[33 71 02.00 20 UNDERGROUND ELECTRICAL DISTRIBUTION][33 70 02.00 10 UNDERGROUND TRANSMISSION AND DISTRIBUTION SYSTEM, UNDERGROUND]. Thoroughly compact backfill with compacting arranged to prevent pressure between conductor, jacket, or sheath and the end of conduit ell. Adjust poles as necessary to provide a permanent vertical position with the bracket arm in proper position for luminaire location.[After installation, paint exposed surfaces of steel poles with two finish coats of[exterior oil paint of a color as indicated][aluminum paint].]

]3.1.5 Pole Setting

[Depth shall be as indicated.][Poles in straight runs shall be in a straight line. Dig holes large enough to permit the proper use of tampers to the full depth of the hole. Place backfill in the hole in 6 inch maximum layers and thoroughly tamp. Place surplus earth around the pole in a conical shape and pack tightly to drain water away.]

3.1.6 Photocell Switch Aiming

Aim switch according to manufacturer's recommendations.[Mount switch on or beside each luminaire when switch is provided in cast weatherproof aluminum housing with swivel arm.][Set adjustable window slide for [_____] footcandles photocell turn-on.]

3.1.7 GROUNDING

Ground noncurrent-carrying parts of equipment including[metal poles,] luminaires, mounting arms, brackets, and metallic enclosures as specified in Section[33 71 02.00 20 UNDERGROUND ELECTRICAL DISTRIBUTION][33 70 02.00 10 UNDERGROUND TRANSMISSION AND DISTRIBUTION SYSTEM, UNDERGROUND]. Where copper grounding conductor is connected to a metal other than copper, provide specially treated or lined connectors suitable for this purpose.

3.1.8 FIELD APPLIED PAINTING

Paint electrical equipment as required to match finish of adjacent surfaces or to meet the indicated or specified safety criteria. Painting shall be as specified in Section 09 90 00 PAINTS AND COATINGS.

3.2 FIELD QUALITY CONTROL

Upon completion of installation, verify that equipment is properly installed, connected, and adjusted. Conduct an operating test to show that the equipment operates in accordance with the requirements of this section.

-- End of Section --

BPA	Office Furniture Vendor	Point of Contact	Phone Number
N00189-07-A-0007	Affordable Interior Systems Inc. dba AIS	Primary: Dave Morales Alternate: David Moorad	800-434-7400 703-307-0955
N00189-07-A-0013	BIF New York Inc.	Primary: Tommy Lee Alternate: Paul Chung	201-933-7777
N00189-07-A-0014	BIF New York Inc.	Primary: Tommy Lee Alternate: Paul Chung	201-933-7777
N00189-07-A-0015	Ergogenesis LLC	Primary: Ray Woodward Alternate: Lee Mauney	800-364-5299
N00189-07-A-0016	Jack Knelly Office Furniture	Primary: Jack Knelly Alternate: Bob Broderrek	570-742-8210
N00189-07-A-0017	Metalworks Inc. dba Great Openings	Primary: Steve Paine Alternate: Shane Pung	231-398-8282 231-895-3177
N00189-07-A-0018	Service Products Group of Bucyrus Inc. dba Wyandot Seating	Primary: Shane Boland Alternate: Phil Snyder	410-627-0397 800-233-4974
N00189-07-A-0019	Global Distributors Inc.	Primary: Ken Corbin Alternate: Sonya Groves	301-657-3557 877-289-4472 ext 816
N00189-07-A-0020	Centercore Group Inc.	Primary: Kevin Singleton Alternate: Penny Vick	870-358-2500
N00189-07-A-0021	Jofco Inc.	Primary: Cheryl Dischinger	888-749-9165
N00189-07-A-0022	Solution Planning & Contract Environments dba SPACE	Primary: Stacy Betts Alternate: Colette St. Louis	989-835-5151
N00189-07-A-0023	Maxon Furniture Inc	Primary: Abe Soria Alternate: David Dillard	253-740-0383 703-723-8127
N00189-07-A-0024	Teknion, Inc.	Primary: Steve Hindle Alternate:William Richards	410-300-9955 202-246-8582
N00189-07-A-0025	Cramer Inc.	Primary: Brian Edmonds	800-366-6700
N00189-07-A-0026	Haworth, Inc.	Primary: Tom Walker	616-393-3611
N00189-07-A-0028	Unicor Federal Prison Industries Inc.	Primary: Diane Stabinski Alternate: Cory Wheeland	757-812-2673 757-410-8408
N00189-07-A-0029	Herman Miller, Inc.	Primary: Dave Bowes	703-946-8312
N00189-07-A-0035	Steelcase Inc.	Primary: Greg Engelsma	616-246-9082
N00189-07-A-0040	Trendway Corp.	Primary: Chris Silguero Alternate: Nick Pannunzio	616-399-3900
N00189-07-A-0049	Knoll, Inc	Primary: Steve Robinson	202-973-0410
N00189-07-A-0051	Compatico Inc.	Primary: Dick Posthumus Alternate: John Rea	616-575-8307 616-575-8312
N00189-07-A-0052	Executive Furniture of Washington DC	Primary: Richard Mellish Alternate: Ann Mellish	301-622-9584
N00189-07-A-0053	Humanscale Corp.	Primary: Theresa Donnelly Alternate: Craig Puegner	732-537-2944 952-906-1097
N00189-07-A-0054	The Hon Company	Primary: Mike Paar	563-272-4345

N00189-07-A-0057	Allsteel Inc	Primary: Bill Phelan Alternate: Marian C. Moreley	800-248-2025
N00189-07-A-0067	Kimball International Inc.	Primary: Drew Andrews Alternate: Mickie Emmons	301-655-7233
N00189-07-A-0069	Commercial Marketing Associates Inc. dba CMA	Primary: Paul Snyder Alternate: Cindy Johnson	240-215-9700 ext 12 240-215-9700 ext 29

BPA	Packaged Furniture Vendor	Point of Contact	Phone Number
N00189-07-A-0001	Krug Inc.	Primary: Mike Boehmer	800-265-2796 ext 203
N00189-07-A-0005	DCI Inc.	Primary: Lisa Birch-Wooldridge	800-552-8286 ext 603
N00189-07-A-0011	R T London Company	Primary: Gerald Barry Alternate: Abbi Adams	877-613-2012
N00189-07-A-0027	Unicor Federal Prison Industries Inc.	Primary: Diane Stabinski Alternate: Cory Wheeland	757-812-2673 757-410-8408
N00189-07-A-0030	Homeland Office Products and Equipment	Primary: Tom Pratt Alternate:Christina Pratt	781-829-0397
N00189-07-A-0032	Stonehill Sales	Primary: Carol Hill Alternate: Scott Hill	845-386-1234
N00189-07-A-0033	Office Design Group Inc.	Primary: Russell Smith Alternate: Kathy Habash	949-215-5557
N00189-07-A-0034	Facilities Solutions Group LLC	Primary: Eric zetterberg Alternate: Phil Foltman	703-234-6057 703-234-6555
N00189-07-A-0035	Steelcase Inc.	Primary: Greg Engelsma	616-246-9082
N00189-07-A-0036	Med Enterprises LLC dba K L N Steel Products	Primary: Mike Gittinger Alternate: Willie Adclck	210-227-4747 800-624-9109 ext 647
N00189-07-A-0037	New Day Office Products & Furnishings	Primary: Chuck Brady	757-398-0718
N00189-07-A-0038	Office Environments International Inc.	Primary: Dale Buch Alternate: Bill Malone	703-578-0024 571-438-6644
N00189-07-A-0042	Trade Products Corp.	Primary: Allyn Richert Alternate: David Richardson	703-502-9000
N00189-07-A-0045	Dehler Manufacturing Co Inc.	Primary: Neicey Holloman Alternate: Bob Cantarrago	757-753-0880
N00189-07-A-0049	Knoll, Inc	Primary: Steve Robinson	202-973-0410
N00189-07-A-0065	GOVSOLUTIONS Inc.	Primary: Donna Long Alternate: Jerry Barnett	757-430-7890
N00189-07-A-0066	Perry & Wilson Inc.	Primary: Malcolm Wilson Alternate: Gi Gi Wilson	301-564-1112
N00189-07-A-0069	Commercial Marketing Associates Inc. dba CMA	Primary: Paul Snyder Alternate: Cindy Johnson	240-215-9700 ext 12 240-215-9700 ext 29

BPA	Household and Quarters Furniture Vendor	Point of Contact	Phone
N00189-07-A-0002	Capitol Supply Inc.	Primary: Phil Harris Alternate: David Ostan	954-485-5000
N00189-07-A-0003	Sundrella Aluminum Products Co. Inc.	Primary: Kaycie Drennan Alternate: Ron Simonson	623-556-6833 800-825-5222
N00189-07-A-0004	Thomasville Furniture Industries Inc.	Primary: Carole Snider	336-476-2175
N00189-07-A-0008	John Savoy & Son Inc.	Primary: Paula Robinson Alternate: Dave Kratzer	570-368-2424
N00189-07-A-0010	New England Woodcraft Inc.	Primary: Betsy Quigley	802-247-8211
N00189-07-A-0031	J Squared Inc. dba University Loft	Primary: Ventura Lopez Alternate: Terrance Bergin	317-985-3748 317-603-6489
N00189-07-A-0047	Lakewood Manufacturing Co. Inc.	Primary: Doug Widlake	800-344-1616
N00189-07-A-0048	Unicor Federal Prison Industries Inc.	Primary: Diane Stabinski Alternate: Cory Wheeland	757-812-2673 757-410-8408
N00189-07-A-0060	United Industry of New England	Primary: Nicholas Besedin	401-421-6106
N00189-07-A-0061	Cmark International Inc.	Primary: Neha Mekim Alternate: Bonnie Perkins	803-699-4940
N00189-07-A-0063	Med Enterprises LLC dba KLN Steel Products	Primary: Mike Gittinger	210-227-4748
N00189-07-A-0069	Commercial Marketing Associates Inc. dba CMA	Primary: Paul Snyder Alternate: Cindy Johnson	240-215-9700 ext 12 240-215-9700 ext 29
N00189-08-A-0001	Furniture by Thurston	Primary: Mike Gittinger Alternate: Wayne Young	210-227-4747 530-272-4329
N00189-08-A-0002	Furniture by Thurston	Primary: Mike Gittinger Alternate: Wayne Young	210-227-4747 530-272-4329

Email	Business Size
dmorales@ais-inc.com	Small
tommy@bifnewyork.com pchung@bifnewyork.com	Small
tommy@bifnewyork.com pchung@bifnewyork.com	Small
rwoodward@ergogenesis.com lmauney@ergogenesis.com	Small
jackknelly@verizon.net bobb@namarketinginc.com	Small
spaine@greatopenings.com spung@greatopenings.com	Small
midatlanticfurniture@comcast.net info@wyandotseating.com	Small
kcorbin@globalgsa.com sgroves@globalindustries.com	Small
ksingleton@centercore.com pvick@centercore.com	Small
cheryl.dischinger@jofco.com	Small
sbetts@spaceinc.net	Small
soriaa@maxonmail.com dillardd@maxonmail.com	Large
shindle@tekus.com brichards@tekus.com	Large
brian@cramerinc.com	Small
thomas.walker@haworth.com	Large
diane.stabinski@oei-inc.com	Large
dave_bowes@hermanmiller.com	Large
genglsma@steelcase.com	Large
csilguero@trendway.com npannunzio@trendway.com	Small
steve_robinson@knoll.com	Large
dposthumus@compatico.com jrea@compatico.com	Small
efwdc@efwdc.com efidc@prodigy.net	Small
tdonnelly@humanscale.com cpuegner@humanscale.com	Small
paarm@honcompany.com	Large

PhelanB@allsteeloffice.com	Large
drew.andrews@kimball.com mickie.emmons@kimball.com	Large
paul.snyder@cma-gsa.com cindy.johnson@cma-gsa.com	Small

Email	***Business Size***
mboehmer@krug.ca	Large
Lbirch-wooldridge@dcufurn.com	Small
gbarry@rtlondon.com aadams@rtlondon.com	Small
diane.stabinski@oei-inc.com	Large
tpratt@homelandoffice.com	Small
chill@hvc.rr.com stonehill@hvc.rr.com	Small
russell@officedesigngroup.com kathy@officedesigngroup.com	Small
eric.zetterberg@fsg-llc.com	Small
genglsma@steelcase.com	Large
mike@kln.com willie@3mtf.com	Small
chuck@newdayoffice.com	Small
dale@oeii.com	Small
arichert@tradeproductscorp.com drichardson@tradeproductscorp.com	Small
neiceyholloman@yahoo.com	Small
steve_robinson@knoll.com	Large
donna@govsolutionsinc.com gsa@govsolutionsinc.com	Small
malcolmw@mjpw.com ggwilson@mjpw.com	Small
paul.snyder@cma-gsa.com cindy.johnson@cma-gsa.com	Small

Email	Business Size
Pharris@capitolsupply.com Dostan@capitolsupply.com	Small
kdrennan@sundrella.com rsimonson@sundrella.com	Small
Csnider@thomasville.com	Small
probinson@savoyfurniture.com dkratzer@savoyfurniture.com	Small
bquigley@newwoodcraft.com	Small
vlopez@uloft.com tbergin@uloft.com	Small
lakmfg@aol.com	Small
diane.stabinski@oei-inc.com	Large
nbesedin@divon.com	Small
neha@cmark.org bonnie@cmark.org	Small
mike@kln.com	Small
paul.snyder@cma-gsa.com cindy.johnson@cma-gsa.com	Small
mike@kln.com wyoung@3mtf.com	Small
mike@kln.com wyoung@3mtf.com	Small

CAPITAL IMPROVEMENTS

NAVFAC Naval Facilities Engineering Command

ENGINEERING & CONSTRUCTION Bulletin

Issue No. 2010-01 | 7 October 2009 | Type: Policy

Subject: Marine Corps BEQ, Gross Building Allowance (GBA) Calculation Change

Reference: (a) UFC 4-721-10: Design: Navy and Marine Corps Bachelor Housing, dtd 31 July 2002, w/ Change 2 dtd 4 Oct 2007.

Attachment: (1) Commandant of the Marine Corps letter 11103 LFF-3 of Sept 11 2009, with enclosures.

1. Purpose.

Provide guidance for calculating the maximum allowable Gross Building Area (GBA) as it relates to enclosed interior corridors and open breezeways for Marine Corps Bachelor Enlisted Quarters (BEQ).

2. Background.

As part of the Commandant of the Marine Corps (CMC) Bachelor Enlisted Quarters Red-Line initiative, a review of the existing 2+0 design guidance, in coordination with Naval Facilities Engineering Command (NAVFAC), was undertaken and incorporated into reference (a). This review resulted in a new maximum allowable GBA of 47 square meters per room, which includes the room itself, common areas, circulation areas, and mechanical, electrical and communication space requirements.

Marine Corps BEQs utilize either open breezeways or enclosed interior corridors as circulation areas, depending on climate region. Open breezeways have traditionally been counted at one-half scope against the GBA, while fully enclosed interior corridors have been counted as full-scope. This has resulted in disparity between the designs and the allowable construction size of BEQ projects. This policy change is intended to eliminate the disparity and provide more standardization to Marine Corps BEQ designs.

3. Applicability.

This ECB applies to Marines Corps Bachelor Enlisted Quarters only.

4. Policy and Implementation.

Effective immediately, per attachment (1), the square footage of interior corridors for Marine Corps Bachelor Enlisted Quarters will be calculated as "one-half scope" (i.e., half square footage) when determining total allowable GBA.

Issue POC: David M. Young, david.m.young@navy.mil (757) 636-2674

ECB posted at https://portal.navfac.navy.mil/portal/page/portal/ci/tab_ci_ecb

5. Action.

This policy and implementation is effective immediately, and is fully retroactive for any FY08/09 projects that can be affected without unreasonable re-design or construction cost increases Changes to criteria documents and NAVFAC standard contract templates will be implemented. Project managers and contracting officers will ensure that all applicable contracts are in compliance with this guidance.

6. Points of Contact.

For clarification or additional information, please contact:

For Marine Corps Bachelor Housing: LtCol Patrick Hittle or Mrs. Darlene McCoy, HQMC LFF-3, commercial 703-695-9767 (DSN 225) or email patrick.r.hittle@usmc.mil or darlene.mccoy@usmc.mil.

For Marine Corps MILCON: Mr. Brian Sanders, HQMC LFL, commercial 703-695-8202 (DSN 225) or e-mail brian.sanders1@usmc.mil.

For NAVFAC: David M. Young, NAVFAC ATLANTIC CI ARCH, commercial 757-322-4212 (DSN 262), or email david.m.young@navy.mil.

This document has been reviewed by Headquarters, US Marine Corps and is fully applicable to all USMC installations.

JOSEPH E. GOTT, P.E.
Chief Engineer and Director,
Capital Improvements

DEPARTMENT OF THE NAVY
HEADQUARTERS UNITED STATES MARINE CORPS
2 NAVY ANNEX
WASHINGTON, DC 20380-1775

IN REPLY REFER TO:
11103
LFF-3
SEP 11 2009

From: Commandant of the Marine Corps (LF)
To: Distribution List

Subj: MARINE CORPS BARRACKS CONSTRUCTION STANDARD - BEQ CORRIDOR SQUARE FOOTAGE CALCULATION

Encl: (1) CMC (LFF-3) Memo Ser 11103/LFF-3 dtd 27 Aug 2009
(2) ASN(I&E) Memo dtd Sep 4 2009

1. Enclosures (1) and (2) are forwarded for your appropriate action in designing and executing ongoing and future MILCON barracks projects. Specifically, as approved by enclosure (2), square footage of interior corridors for bachelor enlisted quarters (BEQs) will be calculated as "half scope" (i.e., half square footage) in determining total facility square footage.

2. This policy is effective immediately.

3. My points of contact for this matter are Mr. Brain Sanders, (MILCON), 703-695-8202/DSN 225, brian.sanders1@usmc.mil and LtCol Patrick Hittle (BEQ Program), 703-695-9767/DSN 225, patrick.r.hittle@usmc.mil.

E. G. PAYNE
Major General, U.S. Marine Corps
Assistant Deputy Commandant
Installations and Logistics
(Facilities)

Distribution:
CG MARCORBASESLANT
CG MARCORBASESPAC
CG MARFORRES NEW ORLEANS LA
CG MCCDC QUANTICO VA
CO MARBKS WASHINGTON DC
NAVFACENGCOM (CI)

Copy to:
CG MARFORCOM NORFOLK VA
CG MARFORPAC CAMP SMITH HI
CG MCIWEST
CG MCIEAST
CG MCB CAMP BUTLER OKINAWA JA
CG MCRD/WRR SAN DIEGO CA
CG MCRD/ERR PARRIS ISLAND SC
CG MCAGCC TWENTYNINE PALMS CA
CO MCB HAWAII
CO MCB QUANTICO VA
CO MCB CAMP PENDLETON CA
CO MCB CAMP LEJEUNE NC

Subj: MARINE CORPS BARRACKS CONSTRUCTION STANDARD - BEQ CORRIDOR SQUARE FOOTAGE CALCULATION

CO MCLB BARSTOW CA
CO MCLB ALBANY GA
CO MCMWTC BRIDGEPORT CA
CO MCSF BLOUNT ISLAND FL
CO MCAS MIRAMAR CA
CO MCAS CAMP PENDLETON CA
CO MCAS YUMA AZ
CO MCAS BEAUFORT SC
CO MCAS CHERRY POINT NC
CO MCAS NEW RIVER NC
CO MCAS IWAKUNI JA
CO MCAF QUANTICO VA
CO HQBN HQMC ARLINGTON VA

CAPITAL IMPROVEMENTS

NAVFAC Naval Facilities Engineering Command

ENGINEERING & CONSTRUCTION Bulletin

Issue No. 2010-04 **10 May 2010** **Type: Policy**

Subject: Marine Corps BEQ, Gross Building Allowance (GBA) Calculation Change

Reference: (a) USMC BEQ Facilities Oversight Board Charter
(b) UFC 4-721-10: Design: Navy and Marine Corps Bachelor Housing, dtd 31 July 2002, w/ changes.

1. **Purpose.**

The purpose of this ECB is to announce an increase in the Gross Building Area (GBA), and additional space enhancements for Marine Corps Bachelor Enlisted Quarters and provide guidance for calculating the new (GBA)..

2. **Background.**

As part of the CMC Bachelor Enlisted Quarters (BEQ) Red-line initiative, a BEQ Facilities Oversight Board was established. The Board has authority to review, evaluate and recommend adoption of new design specifications for Bachelor Enlisted Quarters (BEQ) construction and renovation projects in support of an integrated approach to capture and formally codify "Best of Breed" BEQ construction innovations across the USMC. On 23-24 February, 2010, the Board met to for the first time and conducted a review of the existing BEQ housing design guidance, in coordination with Naval Facilities Engineering Command (NAVFAC). The Board approved an increase of 1 square meter (SM) to the current 47 SM Gross Building Allowance (GBA), and an increase in the sizes of the multi-purpose room and the laundry room. This policy change, and the provision of additional areas are intended to provide significant increased Quality of Life QOL features for enlisted personnel and promote innovation in Marine Corps BEQ designs

3. **Applicability**.

This ECB applies to Marine Corps Bachelor Housing only.

- Apply to FY10 and prior projects if these changes can be implemented within available funding and meet client schedule requirements.

- Apply to all projects programmed for FY 11 and beyond.

4. **Policy.**

Effective immediately, per reference (a)

- The Gross Building Area (GBA) for Marines Corps Bachelor Enlisted Quarters is 48 SM, when determining total facility size. GBA will be calculated as the number of rooms multiplied by 48 SM.

Enhanced spaces have also been approved. Additional details will be provided in the next criteria guidance revision, Change 4, ref (b), describing functional features and amenities.

- The multi-purpose room has been enlarged to accommodate several concurrent common uses and will be calculated at 6.25SF minimum to 12.5SF maximum per resident.

- The laundry room has been enlarged to provide one (1) washer and two (2) dryers for every twelve (12) residents, as a minimum. For programming purposes, this should equate to approximately 400SF floor area per 100 residents

5. **Action.**

This policy and implementation is effective immediately, and is fully retroactive for any FY10 projects that can be affected without unreasonable re-design or construction costs. Changes to criteria documents including reference (b) as Change 4, standard request for proposal contract templates, and BMS to this policy will be implemented timely. Project managers and contracting officers will ensure that all applicable contracts are in compliance with this guidance.

6. **Points of Contact.**

For clarification or additional information, please contact:

For Marine Corps Bachelor Housing: LtCol Patrick Hittle or Mrs. Darlene McCoy, HQMC LFF-3, commercial 703-695-9767 (DSN 225) or email patrick.r.hittle@usmc.mil or darlene.mccoy@usmc.mil

For Marine Corps MILCON: Mr. Brian Sanders, HQMC LFL, commercial 703-695-8202 (DSN 225) or e-mail brian.sanders1@usmc.mil.

For NAVFAC: David M. Young, NAVFAC CI ARCH, commercial 757-322-4212 (DSN 262), or email david.m.young@navy.mil.

This document has been reviewed by Headquarters, US Marine Corps and is fully applicable to all USMC installations.

JOSEPH E. GOTT, P.E.
Chief Engineer and Director,
Capital Improvements

Interior Design Policy: Best Value Determinations Mar 2009

FAR 8.405-1 States the designer shall review at least three schedule contractors through GSA (NAVSUP BPAs). In addition to price, when determining best value, the designer may consider the factors such as special features, trade in considerations, life cycle analysis, warranty, maintenance, past performance, sustainability, comfort, delivery, training needed, technical qualifications, compatibility, and administrative costs as part of the Best Value Determination (BVD) (Enclosures 1 and 2)

If other than price is the deciding factor for selection, the designer must document the decision in a narrative paragraph as part of the BVD.

The designer must sign the BVD forms under Submitting Official

BVD REQUIREMENTS

$3,000 or less: For any procurement in the FF&E package with a value of $3,000 or less, the interior designer may utilize any BPA holder. If the BPA holders cannot supply the item, then any other manufacturer may be utilized.

Greater than $3,000 and $100,000 or less: for any procurement in the FF&E package with a value greater than $3,000 and $100,000 or less, the contractor's interior designer shall always review pricing from at least three BPA holders/manufacturers as well as UNICOR. UNICOR must always be solicited which is done by sending an email with the requirements and evaluation criteria. In addition to the review of published list prices, the contractor's interior designer must confirm the pricing with the vendor. The BVD form (Enclosure 1) must be completed and submitted for all FF&E procurements greater than $3,000 and $100,000 or less.

Greater than $100,000: The contractor's interior designer shall solicit proposals from all BPA holders under the applicable group for FF&E procurements greater than $100,000. UNICOR must always be solicited. The contractor's interior designer shall develop performance criteria and project requirements based on a generic design for the BPA holders and UNICOR to develop a price and performance proposal. The BVD form (Enclosure 2) must be completed and submitted for all FF&E procurements greater than $100,000 and manufacturer's quotes and a summary of all proposals must be attached.

Federal Prison Industries (UNICOR) must be considered as part of all BVDs. UNICOR contact information to obtain pricing or send solicitations is enclosed. (Enclosure 3)

This policy is in effect immediately for any projects awarded after 1 Mar 09. Any questions can be directed to Peggy Noland, CID, Supervisory Interior Designer, NAVFAC MIDLANT at 757-445-3187 or margaret.noland@navy.mil.

****

DEPARTMENT OF THE NAVY
NAVAL FACILITIES
ENGINEERING COMMAND

PROJECT INFORMATION FORM
JANUARY 2007

****

PROJECT INFORMATION FORM

This questionnaire form provides technical information used by the Contracts Office to prepare the final contract package. THIS IS NOT A CONTRACT DOCUMENT. Submit a completed copy of this questionnaire at the 100 percent and final submittal. This form must be completed by the A/E (Architect/Engineer) or the Government (PM, AIC/EIC or DM) depending on who the designer of record is.

PROJECT INFORMATION

a. Project Name: BACHELOR ENLISTED QUARTERS

Location: MCAS CHERRY POINT

eProjects Work Order No.: 796444

Contract Type [Fixed Price] [RFP]: RFP

Estimated Cost: $ 33 million

Design Firm:

Contact: CS Michael Brice

Phone: 757-322-4721

b. Project Manager: Kevin W. Hanna, PE

Phone: 757-322-4273

c. AIC/EIC or DM: Marvin Riedel, RA

Phone: 757-322-8399

FAR 52.211-14, NOTICE OF PRIORITY RATING FOR NATIONAL DEFENSE USE (SEP (1990)

****

NOTE: Unless directed otherwise all jobs require the DO rated priority.

****

Is this project a DO rated or DX rated Priority? ☒ DO ☐ DX

FAC 5252.214-9301, NOTICE TO BIDDERS (JUN 1994)

Does project include additive or option bid items? ☐ Yes ☒ No
(If Yes, include a bid schedule showing base bid and any additive or option items.)

Is Document 00 41 00, "Bid Schedules" or Document 00 22 13, "Supplementary Instructions to Bidders" attached? ☐ Yes ☒ No

FAR 52.236-4, PHYSICAL DATA (APR 1984)

Is physical data (e.g., test borings, hydrographic, weather conditions data) to be furnished or made available to offerers? ☒ Yes ☐ No (If Yes, complete the following)

(1) The indications of physical conditions on the drawings and in the specifications are the result of site investigations by

Included in RFP

(insert a description of investigative methods used, such as surveys, auger borings, core borings, test pits, probings, test tunnels).

(2.) Weather conditions:

(insert a summary of weather records and warnings).

(3) Transportation facilities:

(insert a summary of transportation facilities providing access from the site, including information about their availability and limitations).

(4)

(insert other pertinent information).

FAR 52.204-2, SECURITY REQUIREMENTS (AUG 1996) - ALTERNATE II (APR 1984)

Under the performance of this contract, will contractor employees be required to have ID's for access to the jobsite? ☒ Yes ☐ No

Under the performance of this contract, will the contractor require access to classified material? ☐ Yes ☒ No

FAR 52.211-6, BRAND NAME OR EQUAL (AUG 1999)

NOTE: To obtain "Level III Contracting Officer Approval," the designer must write a JUSTIFICATION of the need for the "Or Equal," "Proprietary/Restrictive," or the "Performance Specifications" in the contract specification or indicated in the design.

Does project include any Brand Name or Equal statements? (Requires prior approval by a Level III Contracting Officer.) ☒ Yes ☐ No (If Yes, fill in table below):

Description	Section or Dwg No.	Para. Or Dwg View
Presto's Geoblock Invisible Structure's Grasspave2	ESR D40 Fire Protection	D4090 Other Fire Protection Systems

FAR 52.211-10, COMMENCEMENT, PROSECUTION, AND COMPLETION OF WORK (APR 1984) - ALTERNATE I (APR 1984)

Fill in construction time for all projects.

(1) Commence work under this contract within 15 calendar days after the date the Contractor receives the notice to proceed,

(2) Prosecute the work diligently, and

(3) Complete the entire work ready for use not later than 745 calendar days after notice to proceed.

****

NOTE: Construction duration (NTP to BOD) should not exceed the following routine facility construction times; exceptions are to be coordinated between NAVFAC and MAJOR COMMAND.

NAVY CONUS:

- **PA ≤$5M, construction duration is 380 days or less**
- **PA >$5M and PA <$20M, construction duration is 555 days or less**
- **PA ≥$20M, construction duration is 745 days or less**

NAVY OCONUS:

- **PA ≤$5M, construction duration is 470 days or less**
- **PA >$5M and PA <$20M, construction duration is 645 days or less**
- **PA ≥$20M, construction duration is 835 days or less**

AIR FORCE CONUS:

- **PA ≤$5M, construction duration is 365 days or less**
- **PA >$5M and PA <$20M, construction duration is 540 days or less**
- **PA ≥$20M, construction duration is 730 days or less**

AIR FORCE OCONUS:

- **PA ≤$5M, construction duration is 455 days or less**
- **PA >$5M and PA <$20M, construction duration is 630 days or less**
- **PA ≥$20M, construction duration is 820 days or less**

****

FAC 5252.211-9301, PHASED CONSTRUCTION SCHEDULE (SEP 1996)

NOTE: Determine the number of days required for each phase.

Phase	Description	Scheduled Start Day	Completion Date

FAR 52.211-12, LIQUIDATED DAMAGES -- CONSTRUCTION (SEP 2000)

If project is phased provide construction cost for each phase:

Phase A $_____, Phase B $_____, Phase C $_____, Phase D $_____, Phase E $_____

FAR 52.223-3, HAZARDOUS MATERIAL IDENTIFICATION AND MATERIAL SAFETY DATA (JAN 1997)

Will this contract require delivery of hazardous material that will remain in place when the project is completed for which the station requires Material Safety Data Sheets? ☐ Yes ☒ No

FAR 52.223-4, RECOVERED MATERIAL CERTIFICATION (OCT 1997)

Does this contract use "Recovered Material"? (i.e. Materials that have been collected or recovered from solid waste per FAR 23.405(a)). ☐ Yes ☒ No

FAR 52.225-9, BUY AMERICAN ACT - CONSTRUCTION MATERIALS (JAN 2005)

Does the project have any exemptions to the Buy American Act? (Prior approval is required for an exemption.) ☐ Yes ☒ No (If Yes, fill in table below:)

Description	Section or Dwg No.	Para. Or Dwg View

FAR 52.225-11, BUY AMERICAN ACT - CONSTRUCTION MATERIALS UNDER TRADE AGREEMENTS (JAN 2005)

Use this if contract is greater than $6,806,000. Yes ☒ No ☐

FAR 52.236.21, SPECIFICATIONS AND DRAWINGS FOR CONSTRUCTION (FEB 1997) - ALTERNATES I, II (APR 1984)

****

NOTE: Do not use for design build. May be applicable for design bid build with respect to Fire Protection design. Contact Navfac Fire Protection for guidance.

****

Are record shop drawings required? Yes ☐ No ☐

Reproducible copies of these record drawings required? Yes ☐ No ☐

DFARS 252.236-7006, COST LIMITATION (JAN 1997) AND FAC 5252.236-9308, INFORMATION CONCERNING COST LIMITATIONS (JUN 1994)

****

NOTE: Contact NAVFAC Project Manager for guidance.

****

Does this project contain a statutory cost limitation (design/build for housing for example)? Yes ☐ No ☒ Amount: $_____

FAC 252.236-9304, UTILITIES FOR CONSTRUCTION AND TESTING (JUNE 1994)

Does Contractor provide all of his own utilities? Yes ☐ No ☒

FAC 5252.236-9305, AVAILABILITY OF UTILITIES (JUN 1994)

Are utilities being provided by the Government? Yes ☒ No ☐

Any Government utility costs charged to the Contractor? Yes ☒ No ☐

List Government Utilities and Costs if applicable.

Utility Provided Cost Per Unit

Contact ROICC Office for rates _____per _____

FAR 52.245-1, PROPERTY RECORDS (APR 1984); FAR 52.245-2, GOVERNMENT PROPERTY 9FIXED-PRICE CONTRACTS) (DEC 1989); FAR 52.245-3, IDENTIFICATION OF GOVERNMENT-FURNISHED PROPERTY (APR 1984); FAR 52.245-4, GOVERNMENT-FURNISHED PROPERTY (SHORT FURM) (APR 1984); FAR 52.245-19, GOVERNMENT PROPERTY FURNISHED "AS IS" (APR 1984)

Is there Government-furnished property in the contract? Yes ☐ No ☒

Is the estimated value of the Government-furnished property greater than or equal to $100,000? Yes ☐ No ☐

Has this property been identified and terms specified? . Yes ☐ No ☐

Will the property be provided "As Is" and require the contractor to modify/repair it? Yes ☐ No ☐

FAC 5252.245-9302, LIMITED ASSUMPTION OF RISK BY GOVERNMENT (JUN 1994)

Is construction performed near naval ammunition depots or magazines where the Government will assume part of the risk? Yes ☐ No ☒

ADDITIONAL INFORMATION FOR CONTRACT SPECIALIST

Normal Bid Acceptance Period is 60 days.

Does this project need a longer period? Yes ☐ No ☒ (If Yes) No. of days _____

Does this project specify any Class I Ozone Depleting Substance (ODS)? Yes ☐ No ☒

(If yes, provide approval per NAPS 5210.002-71.)

NFAS 11.105-100, PROPRIETARY SPECIFICATIONS

Does this project specify any proprietary items? Yes ☐ No ☒

****

NOTE: Justification and Approval should be completed as soon as possible and no later than prefinal design submittal due to required market research.

****

Justification and Approval (J&A) complete? Yes ☐ No ☒

(Indicate where items can be found in the specification by providing the section, paragraph and/or drawing location.) (DM attach copy of J & A approval letter for all proprietary items.) (Where item is specified include the following verbiage "Notwithstanding any other provision of this contract, no other product will be acceptable.)

Description	Section or Dwg No.	Para. Or Dwg View

DFARS 252.236-7005, AIRFIELD SAFETY PRECAUTIONS (DEC 1991)

Is construction near an airfield? Yes ☐ No ☒

If yes, what is the width of the primary surface?

☐ 1,500 feet (750 feet on each side of the runway centerline)
☐ 2,000 feet (1000 feet on each side of the runway centerline)

Will construction cause an obstruction to navigable waterways? Yes ☐ No ☒

Will there be "Partnering" on this project? Yes ☒ No ☐

****

NOTE: Edit the following for NAVFAC Pacific

****

Elevator maintenance service required? Yes ☐ No ☐

Has a separate bid price line item been included if O&M funds are used for the elevator service? Yes ☐ No ☐

Is collateral equipment included? Yes ☐ No ☐
(If yes, NAVSUP waiver required)

Fund type ☐ O&MN ☐ OPN

****

NOTE: Edit the following for contracts in Italy

****

For construction in Italy, provide the Societa' Organismi d'Attestazione (S.O.A.) (Qualifying Agencies) work categories for this project in accordance with Italian D.P.R. 34/00 (Decreto del Presidente della Republica 25 febbraio 2000, n.34).

The Prevailing Work Category: OG-_____

The related classifications (sub-categories) and percentages for this work category:

Classification OS-_____

Percentage of Work _____%

All additional Work Categories other than the Prevailing Category (as required).

First additional Work Category OG-_____

The related classifications (sub-categories) and percentages for this work category:

Classification OS-_____

Percentage of Work _____%

Second Additional Work Category: (and all additional Work Categories can be attached on a separate piece of paper in this format.

Suggestions for improvement of this document should be forwarded to:

Commander
NAVFAC ATLANTIC
Engineering Criteria and Programs Office
6505 Hampton Blvd.
Norfolk, VA 23508-1278
TEL: (757) 322-4433
FAX: (757) 322-4416 Attn: Engineering Criteria and Programs Office

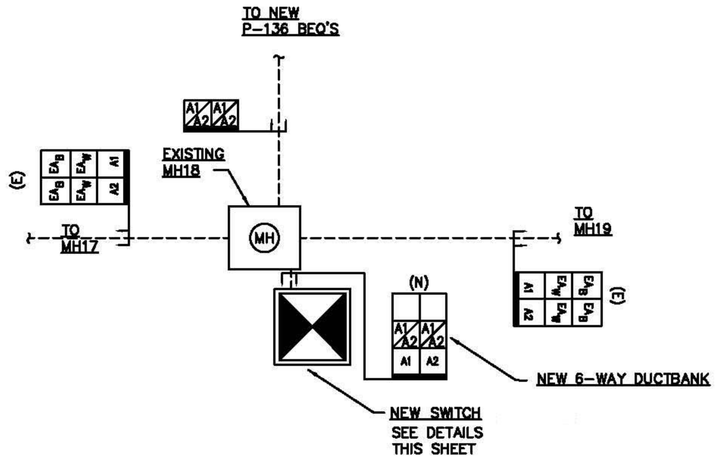

SITE PLAN

NTS

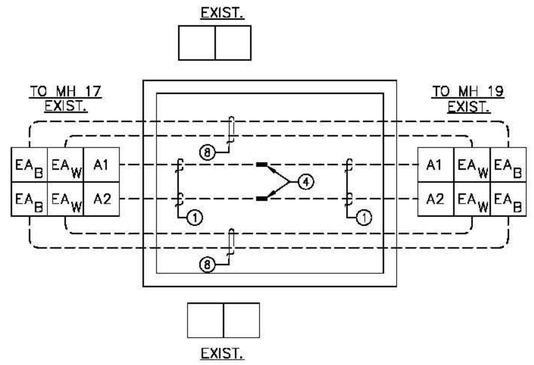

MANHOLE 18 DETAILS (EXISTING)

NO SCALE

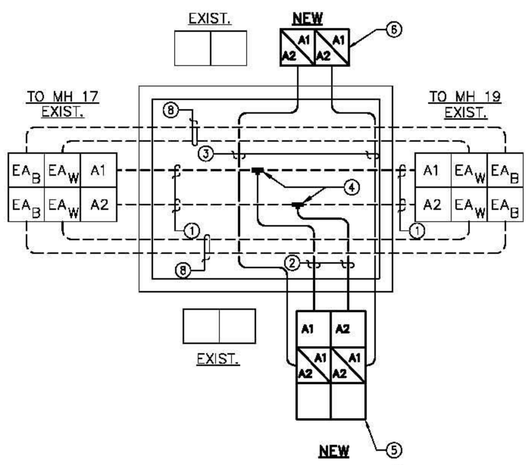

MANHOLE 18 DETAILS (MODIFIED)

NO SCALE

GENERAL NOTES:

THE CONTRACTOR SHALL POSSESS A VALID NC PUBLIC UTILITIES – ELECTRIC LICENSE AND BE INSURED TO DO SUCH WORK IN THE STATE OF NC.

KEYED NOTES:

1. EXISTING 3 #4/0(15KV) & 1 #2/0 (600 VOLT) NEUTRAL.
2. NEW 3 #4/0 (15KV) & 1 #2/0 (600 VOLT) NEUTRAL.
3. NEW 3 #2 (15KV) & 1 #2 (600 VOLT) NEUTRAL.
4. INSTALL NEW TEE TAPE SPLICES IN CONDUCTORS AS SHOWN. CUT OUT EXISTING A1 AND A2 SPLICES AS REQUIRED TO INSTALL NEW TEE SPLICES. PROVIDE NEW 15KV CABLE AS SHOWN TO NEW SWITCH AND SPLICE TO EXISTING CABLES AS SHOWN. PROVIDE CABLE TAGS ON EACH CONDUCTOR IDENTIFYING THE FEEDER AND PHASE. RELABEL EXISTING CABLES AS REQUIRED TO CORRECTLY INDICATE THEIR NEW IDENTITY. HI-POT TEST EACH NEW CABLE SECTION PRIOR TO SPLICING.
5. NEW 6-WAY DUCT BANK FROM MANHOLE TO NEW SWITCH, CONSISTING OF 6-5" SCH 40 PVC CONDUITS DIRECT BURIED. CORE DRILL ALL HOLES IN THE EXISTING MANHOLE AND GROUT AROUND EACH NEW CONDUIT WITH 3000 PSI HYDRAULIC CEMENT.
6. NEW DUCTS FROM MANHOLE TO NEW BEQ TRANSFORMERS, CONSISTING OF 1-5" SCH 40 PVC CONDUIT EACH CONCRETE ENCASED. CORE DRILL ALL HOLES IN THE EXISTING MANHOLE AND GROUT AROUND EACH NEW CONDUIT WITH 3000 PSI HYDRAULIC CEMENT.
7. PROVIDE SWITCH WITH OPTIONS: -L2 (POTENTIAL INDICATION WITH TEST FEATURES AND PROVISIONS FOR LOW-VOLTAGE PHASING); -M4 (200A BUSHING WELLS AT LOAD-INTERRUPTER SWITCH AND BUS TERMINALS).
8. EA (W OR B) – 3#500 15KV EPR & 1#2/0 (600V) N

MATERIAL SPECIFICATIONS:

MEDIUM VOLTAGE CABLE – 1/C, TAPE SHIELD, 15KV EPR 133% INSULATION, CU CONDUCTOR.

MEDIUM VOLTAGE CABLE SPLICES – 15 KV TAPE SPLICE WITH COMPRESSION CONNECTORS.

600V CABLE – 1/C, THWN INSULATION.

ALL ABOVE GROUND GROUNDING CONDUCTOR CONNECTIONS TO BE COMPRESSION TYPE.

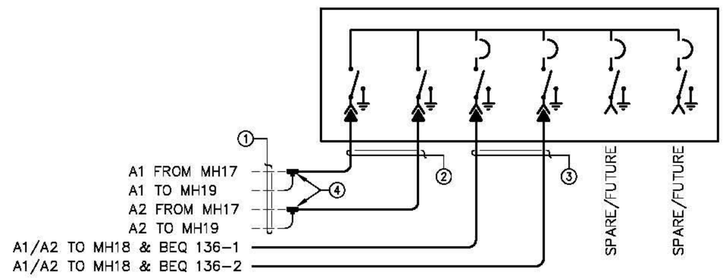

ONE LINE DIAGRAM

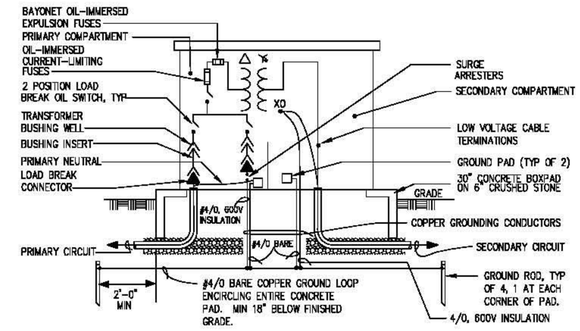

PAD MOUNT TRANSFORMER DETAIL

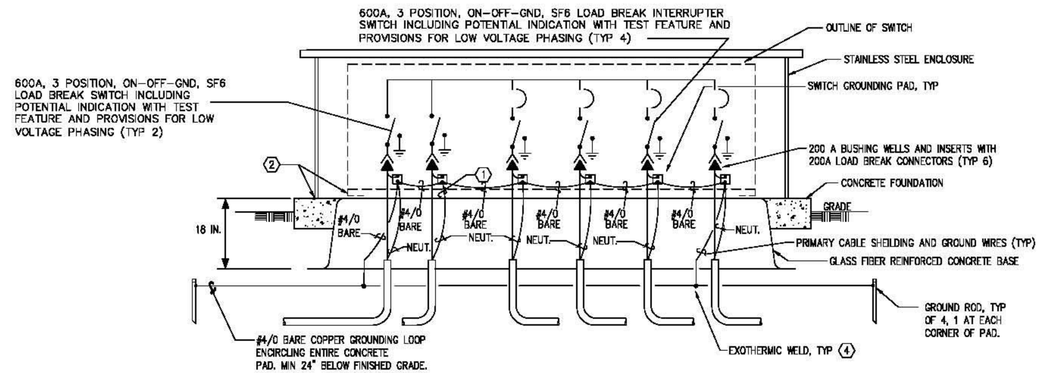

6-WAY SF6 INSULATED PAD MOUNTED SWITCH DETAIL

NO SCALE

KEYED NOTES: (SWITCH DETAIL ONLY)

1. ALL GROUND CONNECTIONS IN PAD MOUNTED TRANSFORMERS AND SWITCHES SHALL BE COMPRESSION TYPE ONLY.
2. PROVIDE CONCRETE FOUNDATION WITH 18" DEEP GLASS FIBER REINFORCED CONCRETE BASE. COORDINATE EXACT DIMENSIONS OF FOUNDATION WITH SF6 SWITCH AND ENCLOSURE. COORDINATE SIZE OF BASE WITH SWITCH SUCH THAT ENCLOSURE IS SUPPORTED BY THE CONCRETE FOUNDATION AND SWITCH IS SUPPORTED BY THE CONCRETE BASE. SEE ANCHOR BOLT DETAIL THIS SHEET.
3. SECURE SWITCH AND ENCLOSURE TO PAD WITH ANCHOR BOLTS.
4. ALL UG GROUND CONNECTIONS TO BE EXOTHERMIC WELDS.

DESIGNED & DRAWN BY: FACILITIES ENGINEERING DEPARTMENT (ELECTRICAL)

APPROVED

ACTIVITY – SUBJECT TO

DATE

APPROVED

FOR BID FOR CONTRACTOR MARKS

DATE

	A/E	RPD
DESIGN		RCM
DRAWN		RCM
REVIEW		NAVFAC
QC		NAVFAC
CHIEF ARCH./ ENGR.		
PROJECT MANAGER		RCM
FIRE PROTECTION		N/A
BRANCH MANAGER		RCM
DESIGN DIRECTOR		RL

DEPARTMENT OF THE NAVY
NAVAL FACILITIES ENGINEERING COMMAND
MARINE CORPS AIR STATION, CHERRY POINT, N.C.

NEW BEQS

15KV SWITCH & TRANSFORMER ELECTRICAL DETAILS

CODE ID. NO. 80091	SIZE D
SCALE:	AS SHOWN
FED NO.	P136
NFA PROJ NO.	P136
SPEC. NO.	N/A
CONTR. CONTR. NO.	
NAVFAC DRAWING NO.	
SHEET	1 OF 2

E-1

QF4048

ENGINEERING CONSULTING SERVICES, LTD.
Geotechnical • Construction Materials • Environmental

June 16, 1994

Mr. Irwin Kroskin, AIA
Kroskin Design Group
6160 Kempsville Circle
Suite 310A
Norfolk, Virginia 23502

ECS Project No. N1273

Reference: Report of Subsurface Exploration and Geotechnical Engineering Analysis for the Proposed Water Survival Training Pool Building
FY 95, BRAC MCON Project P-506T
MCAS Cherry Point, North Carolina

Dear Mr. Kroskin:

Engineering Consulting Services, Ltd. has completed a subsurface exploration and geotechnical analysis for the above referenced project. A report including the results of our subsurface exploration and engineering analysis, boring logs, and boring log information is submitted herein. This exploration and analysis was performed in general accordance with our proposal N183-P, as amended by LANTDIV.

We have enjoyed being of service to you during the design phase of this project. If you should have any questions regarding the information and recommendations contained in the accompanying report or if we can be of further assistance, please do not hesitate to contact us.

Respectfully,

ENGINEERING CONSULTING SERVICES, LTD.

David E. Stinnette
Project Engineer

Roland E. Dubbé, P.E.
Vice President/Norfolk Regional Manager

NORTH CAROLINA PROFESSIONAL SEAL 10916 ENGINEER ROLAND E. DUBBE

DES/cd/N1273RPT

Copies: (6) Kroskin Design Group (for distribution)

REPORT

PROJECT

Subsurface Exploration
and Geotechnical Engineering Analysis
Proposed Water Survival Training Pool Building
FY 95, BRAC MCON Project P-506T
MCAS Cherry Point, North Carolina

CLIENT

Kroskin Design Group
6160 Kempsville Circle
Suite 310A
Norfolk, Virginia 23502

SUBMITTED BY

Engineering Consulting Services, Ltd.
341 Cleveland Place
Suite 102
Virginia Beach, Virginia 23462

PROJECT N1273

DATE June 16, 1994

TABLE OF CONTENTS

	PAGE
PROJECT OVERVIEW	
· Executive Summary	1
· Scope of Work	2
. Purposes of Exploration	3
· Proposed Construction	3
EXPLORATION PROCEDURES	
· Subsurface Exploration Procedures	4
· Laboratory Analysis Program	5
EXPLORATION RESULTS	
· Site Conditions	5
. Subsurface Conditions	5
· Groundwater Observations	6
ANALYSIS AND RECOMMENDATIONS	
· Foundation Evaluation	7
· Floor Slab Design	8
. Pool Design Considerations	8
. Pavement Design Considerations	9
· Subgrade Preparation and Earthwork Operations	10
· Construction Considerations	11
· Closing	12
APPENDIX	
I. Boring Location Sketch	
II. Soil Boring Logs	
III. Laboratory Test Results	
IV. Unified Soil Classification System	
V. Reference Notes for Boring Logs	

PROJECT OVERVIEW

Executive Summary

This report presents the results of our subsurface exploration and engineering analysis for the proposed Water Survival Training Pool Building, FY 95-BRAC MCON Project P-506T. The proposed project site is situated to the immediate northeast of existing Building 3957 which is located on the north corner of 4th Avenue and "E" Street at the Marine Corps Air Station (MCAS) in Cherry Point, North Carolina.

It is our understanding that the proposed project will include the construction of a 1 1/2 STORY STRUCTURE comprised of STEEL FRAMING with BRICK VENEER EXTERIOR and SLAB ON GRADE FLOOR. The project Structural Engineer indicated that maximum COLUMN LOADING associated with this structure will be on the order of about 150 KIPS. This proposed building will house a 12 foot deep pool, classrooms, shower facilities, and a lounge area. It is noted that THE EXISTING SITE GRADE WILL BE RAISED ON THE ORDER of 5 FEET IN order to establish desired finished floor elevation within the pool area. In this regard, the proposed pool rim will be located about 5 feet above existing grade, and the pool bottom will be situated at a depth of approximately 7 feet below existing ground surface.

In summary, WE RECOMMEND THAT THE PROPOSED BUILDING BE SUPPORTED ON SHALLOW SPREAD FOOTINGS foundation system and floor slab-on-grade. Spread footings should be designed to bear on either compacted engineered fill or suitable natural soils, with appropriate stepping as necessary to accommodate changes in floor elevation. For footings designed as discussed herein, a net allowable SOIL BEARING PRESSURE OF 2000 PSF soil bearing pressure of 2000 pounds per square foot (psf) is recommended. In order to attain this allowable capacity, it will be necessary to remove existing topsoil, rootmat, pavement and any unsuitable soils from below new foundations and floor systems. Due to the depth of the anticipated pool excavation, control of the groundwater may require well pointing. At the time of our field study, the groundwater table was observed in the open boreholes at a depth of about 7.5 feet,

however, fluctuations of the groundwater table between about 5 and 10 should be expected depending on seasonal conditions and the time of year that construction activity occurs. It is also noted that depending on seasonal conditions and construction scheduling, additional undercutting of the site soils that support building foundations and slab systems may be required to remove wet or unstable subgrade bearing material.

Based on the design bearing pressure and the anticipated structural loads, total building settlements are anticipated to be less than one inch with differential settlements of approximately one-half this amount.

Further information regarding the subsurface exploration procedures used, groundwater conditions, foundations, floor slab, pool and pavement design, earthwork operations, and construction considerations are included in the text of this report.

Scope of Work

The conclusions and recommendations presented in this report are based on seven (7) soil test borings performed under the direction of Engineering Consulting Services, Ltd., and one (1) California Bearing Ratio (CBR) test. Five (5) soil test borings were extended to depths of 60 feet below the existing ground surface within the limits of the proposed building, and two (2) soil test borings were extended to a depth of 10 feet below the existing ground surface within the proposed new steam line route. The CBR sample was obtained between 1 and 2 feet below the existing ground surface located within the east corner of 4th Avenue and "E" Street. In addition, a site reconnaissance was performed by the Geotechnical Engineer to explore the existing field conditions and drainage characteristics. Included in Appendix of this report is a site sketch indicating the boring and CBR sampling locations, as well as the boring logs and laboratory testing results.

Purposes of Exploration

The purposes of this exploration were to explore the soil and groundwater conditions at the site and to develop soils related engineering recommendations to guide the design of the building, pool and pavements, and to address construction concerns. We accomplished these purposes by drilling borings to explore the subsurface conditions, and analyzing the soil samples from the borings to evaluate pertinent engineering properties and conditions.

Proposed Construction

It is our understanding that the proposed Water Survival Training Pool Building will be a 1-1/2 story structure constructed of steel framing with brick veneer and floor slab-on-grade. As indicated by the project Structural Engineer, maximum column foundation loading will be on the order of about 150 kips. This building will house a 12 foot deep pool, classrooms, shower facilities, and a lounge area.

We anticipate that controlled fill required to raise the site to design floor elevation within the pool area will be on the order of 5 feet. In this regard, we anticipate that the rim of the pool will be located at about finished floor elevation and the base of the pool will be situated at a depth of approximately 7 feet below existing ground surface.

EXPLORATION PROCEDURES

Subsurface Exploration Procedures

Five (5) soil test borings were drilled to depths of sixty (60) feet from existing surface grade within the proposed building area, and two (2) soil test borings were extended to a depth of ten (10) feet within the proposed new steam line route. The borings were performed with a truck mounted auger drill rig which utilized hollow stem augers to advance the boreholes. Representative soil samples were obtained by means of the split-barrel sampling procedure in accordance with ASTM Specification D-1586. In this procedure, a 2-inch O.D., split-barrel sampler is driven into the soil a distance of 18 inches by a 140-pound hammer falling 30 inches. The number of blows required to drive the sampler through a 12-inch interval is termed the Standard Penetration Test (SPT) value and is indicated for each sample on the boring logs. This value can be used as a qualitative indication of the in-place relative density and relative consistency of cohesionless soils and cohesive soils, respectively. This indication is qualitative, since many factors can significantly affect the standard penetration resistance value and prevent a direct correlation between drill crews, drill rigs, drilling procedures, and hammer-rod-sampler assemblies.

A field log of the soils encountered in the borings was maintained by the drill crew. After recovery, each sample was removed from the sampler and visually classified. Representative portions of each sample were then sealed and brought to our laboratory in Virginia Beach, Virginia for further visual examination and laboratory testing.

Laboratory Analysis Program

An experienced geotechnical engineer classified each soil sample from the borings on the basis of texture and plasticity in accordance with the Unified Soil Classification System. Representative soil samples were subjected to moisture content, sieve analysis and Atterberg Limits testing in order to substantiate the visual classifications and to develop the soils engineering properties. The group symbols for each soil type are indicated in parentheses following the soil descriptions on the boring logs. A brief explanation of the USC System is included in Appendix IV of this report. The geotechnical engineer grouped the various soil types into the major zones noted on the boring logs. The stratification lines designating the interfaces between earth materials on the boring logs are approximate; in situ, the transitions may be gradual. The bulk CBR subgrade sample was subjected to moisture-density and CBR testing in general accordance with ASTM D698 and ASTM D1883 procedures, respectively. The boring logs, the results of all laboratory testing, and a sheet of reference notes for boring logs are included in Appendix II, III, and V of this report. All soil samples will be retained in our Virginia Beach laboratory for a period of 60 days, after which they will be discarded unless other instructions are received as to their disposition.

EXPLORATION RESULTS

Site and Soil Conditions

The project site of the proposed building is situated to the immediate northeast of existing Building 3957 which is located on the north corner of 4th Avenue and "E" Street at the Marine Corps Air Station (MCAS) in Cherry Point, North Carolina. In addition, an area designated for new parking is situated within the east corner of 4th Avenue and "E" Street.

At the time of our field exploration performed May 17, 1994, the building site consisted primarily of asphalt pavement (utilized for parking and drive lanes for Building 3957), and grassy landscape areas. A small stand of trees was situated near the east corner of the site, and a shallow drainage ditch bordered the west-southwest side of the site (along 4th Avenue). Numerous buried utilities; such as Cable TV, Steam Line, and Storm Drain traverse the building site. During CBR sampling,

the new parking area was noted to be generally clear, open and covered with sparse grass. Some surficial fill (remnant of past development) was observed in localized areas.

Geologically, the subject site is located in the Coastal Plain Physiographic Province of eastern North Carolina. The site and vicinity are underlain by formations which typically consists of pebbly and cobbly, fine to corase Sand which grades upward into Clayey and Silty fine SAND, and Sandy CLAY and Sandy SILT. A generalized cross section of the areas indicates that these formations are underlain by lower Tertiary deposits, Cretaceous age deposits, and finally metasedimentary and metaigneous rocks of Paleozonic and upper Proteozoic age.

Our subsurface exploration(soil test borings) indicated that surface of the proposed building site is comprised generally of about 6 inches of topsoil within the grassy areas, and about 2 inches of asphalt over 6 inches of stone within the existing pavement area. In addition, shallow uncontrolled fill was observed in the borings near the south end of the site. This fill may be associated with past grading operations performed around Building 3957. Underlying the topsoil and associated surface material and extending to depths up to about 10 to 20 feet, the subsurface soils generally consisted of varying and somewhat erratic deposits of Silty CLAYS and SANDS (CL, SC and SM). These soil deposits were typically of stiff consistency to medium density. Standard Penetration test results (N-values) recorded through these deposits ranged between 6 and 25 blows per foot (BPF). From depths of about 10 to 20 feet and extending to a depth of about 40 feet, the subsurface profile was comprised of a more uniform soil deposit of Silty SAND (SP-SM). This deposit was of loose to medium density with N-values ranging between 6 and 20 BPF. Between depths of about 40 and 52 feet a deposit of dense, Silty SAND (SM) containing marine shell fragments was observed. N-values were recorded between 36 and 72 BPF. From a depth of about 52 feet and extending to boring termination (60 feet), a deposit of medium dense, Silty SAND (SM) was encountered. Recorded N-values through this layer ranged between 14 and 19 BPF.

Groundwater Observations

Observations for groundwater were made during sampling and upon completion of the drilling operations at each boring location. In auger drilling operations, water is not introduced into the boreholes, and the groundwater position can often be determined by observing water flowing into or out of the boreholes. Furthermore, visual observation of the soil samples retrieved during the auger drilling exploration can often be used in evaluating the groundwater conditions.

Based on the results of our observations and sampling performed at each boring location, the groundwater level was noted at depths of about 7.5 feet from existing grade. In general, fluctuation of the groundwater table on the order of 24 inches (+/-) can occur due to seasonal conditions and variations in precipitation. It is our recommendation that the static groundwater table be considered to fluctuate between depths of about 5 to 10 feet. Furthermore, considering the erratic composition of the shallower subsurface profile, perched water should be expected to be encountered at relatively shallower depths.

ANALYSIS AND RECOMMENDATIONS

Foundations

The anticipated finished floor elevation for the proposed building within the pool area will be raised with controlled fill to about 5 feet above existing mean grade. It is noted that an additional 12 to 36 inches of backfill in some areas of the site may be required to provide subgrade improvements in unstable areas and/or areas of deep grubbing for tree root removal, as well as backfilliing existing site ditching and abandoned utility trenches. Therefore, as much as 6 to 8 feet of fill could be required in various areas of the site.

For foundation design and construction, we recommend that a net allowable soil bearing pressure of 2000 psf not be exceeded and that the base of the footings be a minimum of 24 inches wide and be embedded a minimum of 18 inches below final exterior site grade. It is also recommended that the footings bear in stable original and undisturbed ground or in select fill compacted to at least 95% of the material's maximum dry density as determined by the Standard Proctor Method (ASTM D698). Select fill material is described in the following "Floor Slab Design" section of this report. The footing should be evaluated as an independent system, not rigidly connected to the floor slab. In addition, the footing should be adequately designed to transfer concentrated loads so that the pressures at the base of the footing do not exceed an allowable net bearing capacity of 2000 psf.

For foundation support considerations, we recommend that all unsuitable and unstable material (where encountered) be removed from below all new footing areas. In areas where deeper unsuitable material, abandoned utilities and tree stumps are removed, the undercut and depressed areas should be backfilled with a compacted controlled fill (select material). For backfilling undercut and low areas we recommend utilizing a select fill material compacted to at least 95% the material's maximum dry density as determined by the Standard Proctor method (ASTM D698). In this regard, a unit price for over-excavation, and importation and placement of select fill should be provided in the foundation contract.

Floor Slab Design

For the design and construction of the floor slab-on-grade for the proposed building, it is recommended that all existing vegetation, topsoil, rootmat, pavements, abandoned utilities, and any other soft or unsuitable materials be removed from the subgrade area. The stripped area should be observed and proofrolled by an experienced Geotechnical Engineer during the time of construction in order to aid in locating any additional unsuitable materials which should be removed.

Engineered fill material (select fill) required to raise the building site to the design floor slab subgrade elevation should consist of an approved granular fill material (SAND) classified as SM, SP-SM, SP or better containing less than about 20% by weight Silt or Clay and free of debris. This material should be placed in lifts not exceeding 8 inches in loose thickness, moisture conditioned to within ±3% of the optimum moisture content, and compacted to a minimum of 95% of the maximum density obtained in accordance with ASTM Specification D-698, Standard Proctor Method.

Pool Design Considerations

It is our understanding that the proposed base of the 12 foot deep pool will be located about 7 feet below existing ground surface.

The side walls of the proposed pool should be designed to resist the lateral forces imposed by the surrounding soils. For purposes of design evaluation these soils can be considered as homogenous between depths of about 0 to 10 feet. The recommended soil design parameters for the observed subsurface soil conditions at the site are as follows:

Depth, (ft):	0-10
Cohesion, (psf):	150
Angle of Internal Friction: Ø	20
Active Lateral Pressure Coefficient, Ka:	0.49
Passive Lateral Pressure Coefficient, Kp:	2.04
At Rest Lateral Pressure Coefficient, Ko:	0.50
Soil Unit Weight (moist), δ, (pcf):	115
Modulus of Subgrade Reaction, Ks, (psi/in):	200

In addition, the base of the pool should be designed to resist uplift forces imposed by the static groundwater table. Furthermore, the pool structure should be designed to resist buoyancy when the pool is drained. During our field exploration performed May 17, 1994, the groundwater table was observed in the open boreholes at a depth of about 7.5 feet. For purposes of design evaluation, we recommended using a seasonal high water elevation estimated at a depth of 5 feet below existing ground surface.

Pavements Design Considerations

For the construction of new pavements within the proposed parking area, we recommend that topsoil, surficial fill and any other soft or unsuitable materials be removed from below the proposed parking area. The stripped surface should be proofrolled and carefully observed at the time of construction in order to aid in identifying any localized soft or unsuitable materials. Such materials should be removed prior to fill placement or grading for the parking lot and drive lanes. In order to minimize deep undercutting of unstable original subgrade encompassing large areas, a suitable geotextile fabric may be utilized provided that objectionable organic material is removed. The utilization of a geotextile fabric should be determined in the field at the time of subgrade preparation and proofrolling operations.

An important consideration with the design and construction of pavements is surface and subsurface drainage. Where standing water develops, either on the pavement surface or within the base course layer, softening of the subgrade and other problems related to the deterioration of the pavement can

be expected. Furthermore, good drainage should minimize the possibility of the subgrade materials becoming saturated over a long period of time. Based upon the results of the soil test borings for the building, the groundwater table should not significantly affect the performance of pavements; however, surface runoff water that is trapped during construction on the exposed subgrade soils could create localized deterioration of the soil's bearing capacity.

CBR testing performed on one (1) bulk sample obtained from anticipated pavement subgrade indicated soaked CBR value of 5.0. Based on these results, we would recommend that a design CBR value of 3.0 be utilized for pavement design. The design CBR value was computed as 2/3 of the direct soaked CBR value taken at the 0.1 inch penetration ratio.

Subgrade Preparation and Earthwork Operations

The subgrade preparation should consist of stripping all vegetation, rootmat, topsoil, abandoned pavements, and any other soft or unsuitable material from the proposed building and new parking areas.

We recommend the earthwork clearing be extended a minimum of 5 feet beyond the building limits and 2 feet beyond the pavement limits.

After stripping to the desired grade, and prior to fill placement, the stripped surface should be observed by an experienced geotechnical engineer or his authorized representative. Proofrolling using a 10-ton drum roller or a loaded dump truck having an axle weight of at least 10 tons may be used at this time to aid in identifying localized soft or unsuitable material. Any soft or unsuitable materials encountered during this proofrolling should be removed and replaced with an approved backfill compacted to the criteria given below.

Fill used to support any part of the proposed foundation system and floor slabs should be placed in lifts not exceeding 8 inches in loose thickness, moisture conditioned to within +/- 3% of the optimum moisture content, and compacted to at least 95% of the maximum dry density obtained in accordance with ASTM Specification D698, Standard Proctor Method.

At this time it is unknown what volume of unsuitable surface material may require removal from below foundations, floor slabs, and pavements. It is therefore recommended that the construction contract include a fair unit rate for undercut and backfill below subgrade elevations and backfilling with a clean Sand Fill (select material) as described in the "Floor Slab Design" section of this report.

Construction Considerations

All abandoned site utilities should be properly removed and/or capped as necessary. Abandoned utility trenches which lie within the limits of the new building should be evaluated for stability by proofrolling and probing as required. In areas where abandoned utilities are removed, the open trenches should be properly backfilled with a select material as discussed in the preceding section.

Proper compaction control of the building pad fill is an important aspect of this project. Therefore, we recommend that all fill operations be observed full-time by a qualified soil technician to determine if minimum compaction requirements are being met.

When wet, the shallower subgrade soils will degrade quickly with disturbance from contractor operations. Therefore, good site drainage should be maintained during earthwork operations so as to help maintain the integrity of the soil.

Control of groundwater and/or perched water may become difficult during construction of excavations and general cutting across the site. We expect that dewatering in trenches and shallow excavations could be accomplished by pumping from sumps. Deeper excavations, such as for the pool construction, may require well pointing to control the groundwater. The specifications should alert the contractor to the potential presence of subsurface water, and it should be incumbent on the contractor to provide the means by which to satisfactorily dewater the site.

Closing

We recommend that construction activities be monitored by a qualified geotechnical engineering firm to provide the necessary overview and to check the suitability of the subgrade soils for support of the shallow foundations and slabs. ECS, Ltd. can provide these services and would be happy to submit unit rates for the required services during project cost estimation.

APPENDIXES

I. Boring Location Sketch

II. Soil Boring Logs

III. Laboratory Test Results

IV. Unified Soil Classification System

V. Reference Notes For Boring Logs

Appendix I

Boring Location Sketch

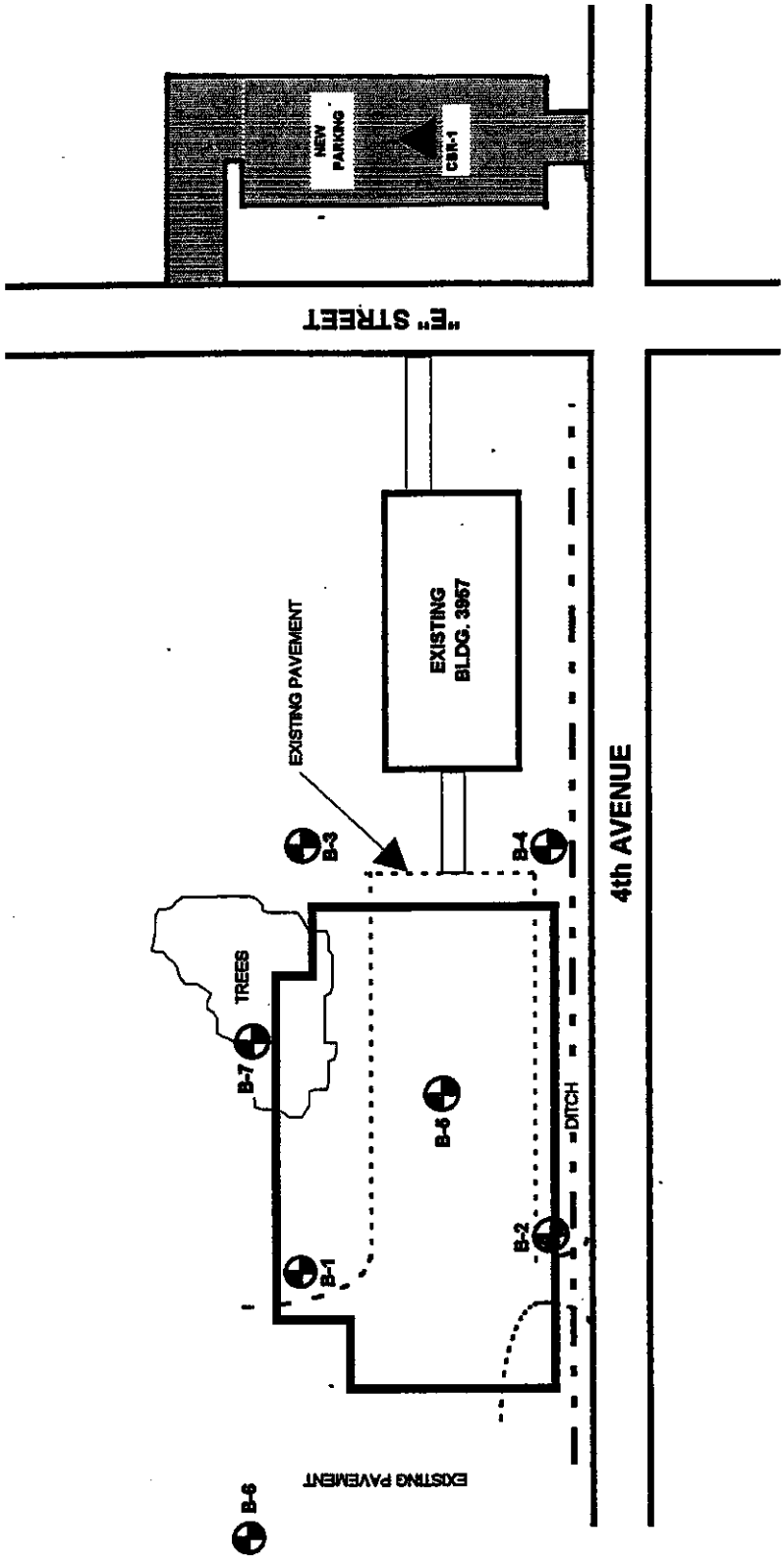

ECS LTD
ENGINEERING CONSULTING SERVICES, LTD

BORING LOCATION DIAGRAM

WATER SURVIVAL TRAINING POOL BUILDING

MCAS CHERRY POINT, NORTH CAROLINA

RAC	DES	5/17/1994	N.T.S.	N1273	1 OF 1

Appendix II

Soil Boring Logs

OWNER	JOB #	BORING #	SHEET
UNITED STATES NAVY	N1273	B-1	1 OF 2

PROJECT NAME: WATER SURVIVAL TRAINING POOL (P-506T)

ARCHITECT-ENGINEER: KROSKIN DESIGN GROUP

ECS LTD

SITE LOCATION: MCAS – CHERRY POINT, NORTH CAROLINA

CALIBRATED PENETROMETER TONS/FT.^{2} (1, 2, 3, 4, 5+)

PLASTIC LIMIT % (X) — WATER CONTENT % (●) — LIQUID LIMIT % (Δ) (10, 20, 30, 40, 50+)

STANDARD PENETRATION BLOWS/FT. (⊗) (10, 20, 30, 40, 50+)

DEPTH (FT)	SAMPLE NO.	SAMPLE TYPE	SAMPLE DISTANCE (IN)	RECOVERY (IN)	DESCRIPTION OF MATERIAL	ELEVATION (FT)	STANDARD PENETRATION BLOWS/FT.
					SURFACE ELEVATION		
0	1	SS	24	24	Silty CLAY, With Sand, Orange and Gray Mottled, Moist, Medium Stiff to Stiff, (CL)		20
	2	SS	24	24			13
5	3	SS	24	24	Silty Fine to Medium SAND, Grayish Tan, Wet to Saturated, Medium Dense, (SP-SM) [Dark Gray Clay Lenses From 13 Feet to 19 Feet]		9
	4	SS	24	24			24
	5	SS	24	24			18
10	6	SS	24	24			22
	7	SS	24	24			8
15							
	8	SS	24	24	Fine to Coarse SAND, Trace Silt, Gray, Saturated, Medium Dense, (SP-SM)		8
20							
	9	SS	24	24			14
25							
	10	SS	24	24			14
30							

CONTINUED ON NEXT PAGE.

THE STRATIFICATION LINES REPRESENT THE APPROXIMATE BOUNDARY LINES BETWEEN SOIL TYPES IN-SITU THE TRANSITION MAY BE GRADUAL

WL 7.5 FEET WS OR WD	BORING STARTED 05-17-94	TOPSOIL DEPTH: 6"
WL BCR ACR	BORING COMPLETED 05-17-94	CAVE IN DEPTH @
WL	RIG FOREMAN FISHBURNE	DRILLING METHOD HOLLOW STEM AUGER

OWNER	JOB #	BORING #	SHEET
UNITED STATES NAVY	N1273	B-1	2 OF 2
PROJECT NAME WATER SURVIVAL TRAINING POOL (P-506T)	ARCHITECT-ENGINEER KROSKIN DESIGN GROUP		

SITE LOCATION
MCAS – CHERRY POINT, NORTH CAROLINA

CALIBRATED PENETROMETER TONS/FT.^{2} 1 2 3 4 5+

PLASTIC LIMIT % X — WATER CONTENT % ● — LIQUID LIMIT % Δ

10 20 30 40 50+

STANDARD PENETRATION BLOWS/FT. ⊗ 10 20 30 40 50+

DEPTH (FT)	SAMPLE NO.	SAMPLE TYPE	SAMPLE DISTANCE (IN)	RECOVERY (IN)	DESCRIPTION OF MATERIAL	ELEVATION (FT)
					SURFACE ELEVATION	
30						
	11	SS	24	24		
35						
	12	SS	24	24		
40						
					Silty Fine to Medium SAND, With Marine Shell Fragments, Light Gray, Moist, Dense, (SM)	
	13	SS	24	24		
45						
	14	SS	24	24		
50						
					Silty Fine SAND, Trace Clay, Grayish Green, Moist, Medium Dense, (SM)	
	15	SS	24	24		
55						
	16	SS	24	24		
60						

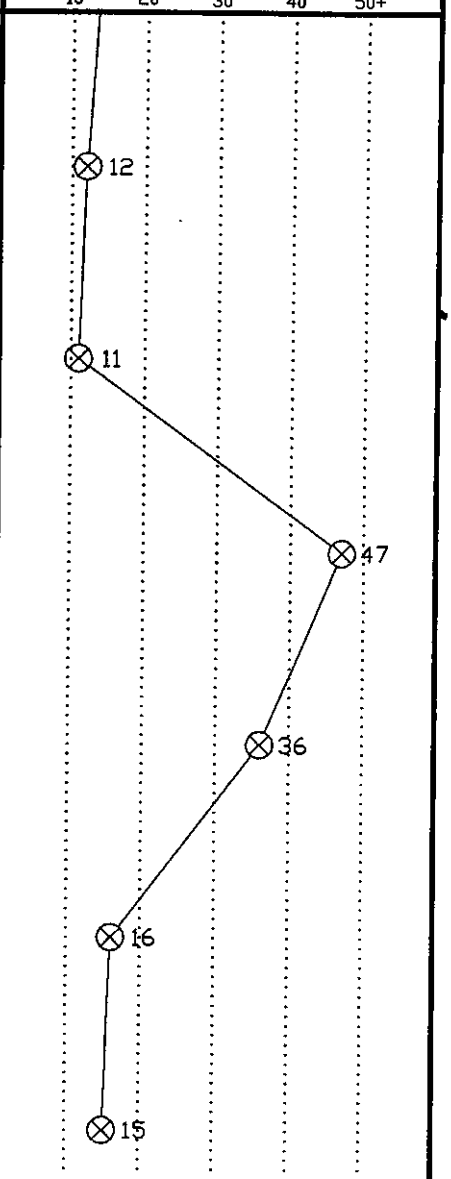

END OF BORING @ 60.0'

THE STRATIFICATION LINES REPRESENT THE APPROXIMATE BOUNDARY LINES BETWEEN SOIL TYPES IN-SITU THE TRANSITION MAY BE GRADUAL

WL 7.5 FEET WS OR WD	BORING STARTED 05-17-94	TOPSOIL DEPTH: 6"
WL BCR ACR	BORING COMPLETED 05-17-94	CAVE IN DEPTH @
WL	RIG FOREMAN FISHBURNE	DRILLING METHOD HOLLOW STEM AUGER

OWNER	JOB #	BORING #	SHEET
UNITED STATES NAVY	N1273	B-2	1 OF 2
PROJECT NAME WATER SURVIVAL TRAINING POOL (P-506T)	ARCHITECT-ENGINEER KROSKIN DESIGN GROUP		

SITE LOCATION
MCAS – CHERRY POINT, NORTH CAROLINA

CALIBRATED PENETROMETER TONS/FT.^{2} (1 2 3 4 5+)
PLASTIC LIMIT % (X) — WATER CONTENT % (●) — LIQUID LIMIT % (Δ)
STANDARD PENETRATION BLOWS/FT. (⊗) (10 20 30 40 50+)

DEPTH (FT)	SAMPLE NO.	SAMPLE TYPE	SAMPLE DISTANCE (IN)	RECOVERY (IN)	DESCRIPTION OF MATERIAL	ELEVATION (FT)	STANDARD PENETRATION BLOWS/FT.
					SURFACE ELEVATION		
0	1	SS	24	24	Silty CLAY, With Sand, Orange and Gray Mottled, Moist, Medium Stiff, (CL)		8
	2	SS	24	24			8
5	3	SS	24	24			6
	4	SS	24	24	Silty Fine to Medium SAND, Tan, Moist to Saturated, Loose to Medium Dense, (SP-SM)		9
	5	SS	24	24			10
10	6	SS	24	24			11
					Silty Fine to Coarse SAND, Trace Clay Lenses, Gray, Wet to Saturated, Loose to Medium Dense, (SP-SM)		
	7	SS	24	24			7
15							
	8	SS	24	24			8
20							
	9	SS	24	24			14
25							
	10	SS	24	24			15
30							

CONTINUED ON NEXT PAGE.

THE STRATIFICATION LINES REPRESENT THE APPROXIMATE BOUNDARY LINES BETWEEN SOIL TYPES IN-SITU THE TRANSITION MAY BE GRADUAL

WL 7.5 FEET WS OR WD	BORING STARTED 05-17-94	TOPSOIL DEPTH: 6"
WL BCR ACR	BORING COMPLETED 05-17-94	CAVE IN DEPTH @
WL	RIG FOREMAN FISHBURNE	DRILLING METHOD HOLLOW STEM AUGER

OWNER	JOB #	BORING #	SHEET
UNITED STATES NAVY	N1273	B-2	2 OF 2
PROJECT NAME WATER SURVIVAL TRAINING POOL (P-506T)	ARCHITECT-ENGINEER KROSKIN DESIGN GROUP		

SITE LOCATION
MCAS – CHERRY POINT, NORTH CAROLINA

CALIBRATED PENETROMETER TONS/FT.^{2} 1 2 3 4 5+

PLASTIC LIMIT % X — WATER CONTENT % ● — LIQUID LIMIT % Δ

10 20 30 40 50+

STANDARD PENETRATION BLOWS/FT. ⊗ 10 20 30 40 50+

DEPTH (FT)	SAMPLE NO.	SAMPLE TYPE	SAMPLE DISTANCE (IN)	RECOVERY (IN)	DESCRIPTION OF MATERIAL	ELEVATION (FT)
					SURFACE ELEVATION	
30						
	11	SS	24	24		
35						
	12	SS	24	24		
40						
					Silty Fine to Medium SAND, With Marine Shell Fragments, Light Gray, Moist, Dense to Very Dense, (SM)	
	13	SS	24	24		
45						
	14	SS	24	24		
50						
					Silty Fine SAND, Trace Clay, Grayish Green, Moist, Medium Dense, (SM)	
	15	SS	24	24		
55						
	16	SS	24	24		
60						

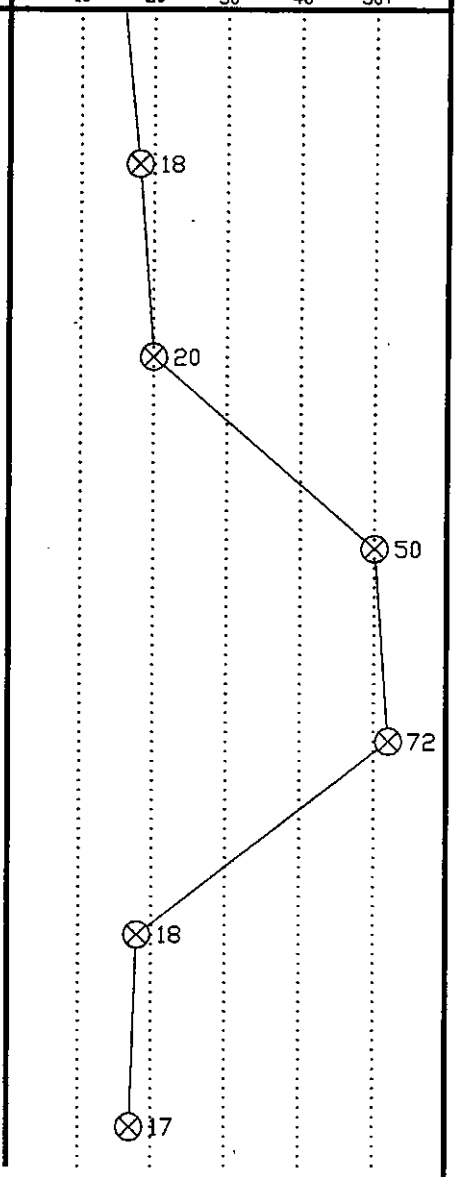

END OF BORING @ 60.0'

THE STRATIFICATION LINES REPRESENT THE APPROXIMATE BOUNDARY LINES BETWEEN SOIL TYPES IN-SITU THE TRANSITION MAY BE GRADUAL

WL 7.5 FEET WS OR WD	BORING STARTED 05-17-94	TOPSOIL DEPTH: 6"
WL BCR ACR	BORING COMPLETED 05-17-94	CAVE IN DEPTH @
WL	RIG FOREMAN FISHBURNE	DRILLING METHOD HOLLOW STEM AUGER

OWNER	JOB #	BORING #	SHEET
UNITED STATES NAVY	N1273	B-3	1 OF 2
PROJECT NAME WATER SURVIVAL TRAINING POOL (P-506T)	ARCHITECT-ENGINEER KROSKIN DESIGN GROUP		

SITE LOCATION
MCAS – CHERRY POINT, NORTH CAROLINA

CALIBRATED PENETROMETER TONS/FT.^{2} (1 2 3 4 5+)

PLASTIC LIMIT % X — WATER CONTENT % — LIQUID LIMIT % Δ (10 20 30 40 50+)

STANDARD PENETRATION BLOWS/FT. ⊗ (10 20 30 40 50+)

DEPTH (FT)	SAMPLE NO.	SAMPLE TYPE	SAMPLE DISTANCE (IN)	RECOVERY (IN)	DESCRIPTION OF MATERIAL	ELEVATION (FT)	STANDARD PENETRATION BLOWS/FT.
					SURFACE ELEVATION		
0	1	SS	24	24	Silty and Clayey SAND, Trace Concrete Fragments, Brown and Dark Gray, Moist, Loose, (FILL)		10
	2	SS	24	24	Silty Fine SAND, Tan, Moist, Medium Dense, (SM)		18
5	3	SS	24	24	Silty CLAY, Orange and Gray Mottled, Moist, Very Stiff, (CL)		23
	4	SS	24	24	Silty Fine to Medium SAND, Tan, Moist to Saturated, Medium Dense, (SM) [Trace Root Matting at 9 Feet]		17
	5	SS	24	24			13
10	6	SS	24	24	Silty Fine to Coarse SAND, Trace Clay Lenses, Gray, Wet, Loose to Medium Dense, (SP-SM)		8
	7	SS	24	24			7
15							
	8	SS	24	24			15
20							
	9	SS	24	24			16
25							
	10	SS	24	24			18
30							

CONTINUED ON NEXT PAGE.

THE STRATIFICATION LINES REPRESENT THE APPROXIMATE BOUNDARY LINES BETWEEN SOIL TYPES IN-SITU THE TRANSITION MAY BE GRADUAL

WL 7.5 FEET WS OR WD	BORING STARTED 05-17-94	TOPSOIL DEPTH: 6"
WL BCR ACR	BORING COMPLETED 05-17-94	CAVE IN DEPTH @
WL	RIG FOREMAN FISHBURNE	DRILLING METHOD HOLLOW STEM AUGER

OWNER	JOB #	BORING #	SHEET
UNITED STATES NAVY	N1273	B-3	2 OF 2
PROJECT NAME WATER SURVIVAL TRAINING POOL (P-506T)	ARCHITECT-ENGINEER KROSKIN DESIGN GROUP		

SITE LOCATION
MCAS – CHERRY POINT, NORTH CAROLINA

CALIBRATED PENETROMETER TONS/FT.^{2} (1, 2, 3, 4, 5+)
PLASTIC LIMIT % X — WATER CONTENT % ● — LIQUID LIMIT % Δ (10, 20, 30, 40, 50+)
STANDARD PENETRATION BLOWS/FT. ⊗ (10, 20, 30, 40, 50+)

DEPTH (FT)	SAMPLE NO.	SAMPLE TYPE	SAMPLE DISTANCE (IN)	RECOVERY (IN)	DESCRIPTION OF MATERIAL	ELEVATION (FT)	STANDARD PENETRATION BLOWS/FT.
					SURFACE ELEVATION		
30							
	11	SS	24	24			19
35							
	12	SS	24	24			20
40							
					Silty Fine to Medium SAND, With Marine Shell Fragments, Light Gray, Moist, Dense, (SM)		
	13	SS	24	24			46
45							
	14	SS	24	24			48
50							
					Silty Fine SAND, Trace Clay, Grayish Green, Moist, Medium Dense, (SM)		
	15	SS	24	24			15
55							
	16	SS	24	24			14
60							

END OF BORING @ 60.0'

THE STRATIFICATION LINES REPRESENT THE APPROXIMATE BOUNDARY LINES BETWEEN SOIL TYPES IN-SITU THE TRANSITION MAY BE GRADUAL

WL 7.5 FEET WS OR ⓓ	BORING STARTED 05-17-94	TOPSOIL DEPTH: 6"
WL BCR ACR	BORING COMPLETED 05-17-94	CAVE IN DEPTH @
WL	RIG FOREMAN FISHBURNE	DRILLING METHOD HOLLOW STEM AUGER

OWNER	JOB #	BORING #	SHEET
UNITED STATES NAVY	N1273	B-4	1 OF 2
PROJECT NAME WATER SURVIVAL TRAINING POOL (P-506T)	ARCHITECT-ENGINEER KROSKIN DESIGN GROUP		

SITE LOCATION
MCAS – CHERRY POINT, NORTH CAROLINA

CALIBRATED PENETROMETER TONS/FT.^{2} (1 2 3 4 5+)
PLASTIC LIMIT % X — WATER CONTENT % ● — LIQUID LIMIT % Δ (10 20 30 40 50+)
STANDARD PENETRATION BLOWS/FT. ⊗ (10 20 30 40 50+)

DEPTH (FT)	SAMPLE NO.	SAMPLE TYPE	SAMPLE DISTANCE (IN)	RECOVERY (IN)	DESCRIPTION OF MATERIAL	ELEVATION (FT)	STANDARD PENETRATION BLOWS/FT.
					SURFACE ELEVATION		
0	1	SS	24	24	Silty and Clayey SAND, Brown and Gray, Moist, Medium Dense, (FILL)		23
	2	SS	24	24	Silty CLAY, Trace Sand, Orange and Gray Mottled, Moist, Very Stiff, (CL)		25
5	3	SS	24	24			18
	4	SS	24	24	Silty Fine to Medium SAND, Trace Clay, Grayish Tan, Moist to Saturated, Loose to Medium Dense, (SM)		7
	5	SS	24	24			8
10	6	SS	24	24			10
	7	SS	24	24	Silty Fine to Coarse SAND, Trace Clay Lenses, Gray, Saturated, (SP-SM)		6
15							
	8	SS	24	24			11
20							
	9	SS	24	24			17
25							
	10	SS	24	24			16
30							

CONTINUED ON NEXT PAGE.

THE STRATIFICATION LINES REPRESENT THE APPROXIMATE BOUNDARY LINES BETWEEN SOIL TYPES IN-SITU THE TRANSITION MAY BE GRADUAL

WL 7.5 FEET WS DR WD	BORING STARTED 05-18-94	TOPSOIL DEPTH: 6"
WL BCR ACR	BORING COMPLETED 05-18-94	CAVE IN DEPTH @
WL	RIG FOREMAN FISHBURNE	DRILLING METHOD HOLLOW STEM AUGER

OWNER	JOB #	BORING #	SHEET
UNITED STATES NAVY	N1273	B-4	2 OF 2
PROJECT NAME WATER SURVIVAL TRAINING POOL (P-506T)	ARCHITECT-ENGINEER KROSKIN DESIGN GROUP		

SITE LOCATION
MCAS – CHERRY POINT, NORTH CAROLINA

CALIBRATED PENETROMETER TONS/FT.^{2} 1 2 3 4 5+

PLASTIC LIMIT % X — WATER CONTENT % ● — LIQUID LIMIT % Δ

10 20 30 40 50+

STANDARD PENETRATION BLOWS/FT. ⊗ 10 20 30 40 50+

DEPTH (FT)	SAMPLE NO.	SAMPLE TYPE	SAMPLE DISTANCE (IN)	RECOVERY (IN)	DESCRIPTION OF MATERIAL	ELEVATION (FT)
					SURFACE ELEVATION	
30						
	11	SS	24	24		
35						
	12	SS	24	24		
40						
					Silty Fine to Medium SAND, With Marine Shell Fragments, Light Gray, Moist, Very Dense, (SM)	
	13	SS	24	24		
45						
	14	SS	24	24		
50						
					Silty Fine SAND, Trace Clay, Grayish Green, Moist, Medium Dense, (SM)	
	15	SS	24	24		
55						
	16	SS	24	24		
60						

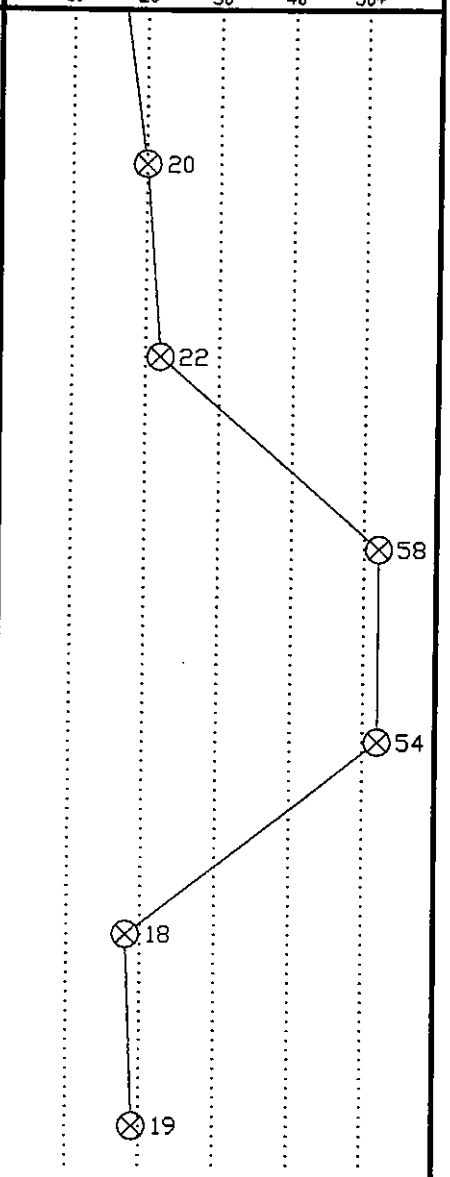

END OF BORING @ 60.0'

THE STRATIFICATION LINES REPRESENT THE APPROXIMATE BOUNDARY LINES BETWEEN SOIL TYPES IN-SITU THE TRANSITION MAY BE GRADUAL

WL 7.5 FEET WS OR ✓	BORING STARTED 05-18-94	TOPSOIL DEPTH: 6"
WL BCR ACR	BORING COMPLETED 05-18-94	CAVE IN DEPTH @
WL	RIG FOREMAN FISHBURNE	DRILLING METHOD HOLLOW STEM AUGER

OWNER	JOB #	BORING #	SHEET
UNITED STATES NAVY	N1273	B-5	1 OF 2
PROJECT NAME WATER SURVIVAL TRAINING POOL (P-506T)	ARCHITECT-ENGINEER KROSKIN DESIGN GROUP		

SITE LOCATION
MCAS – CHERRY POINT, NORTH CAROLINA

CALIBRATED PENETROMETER TONS/FT.^{2} (1 2 3 4 5+)
PLASTIC LIMIT % (X) — WATER CONTENT % — LIQUID LIMIT % (Δ) (10 20 30 40 50+)
STANDARD PENETRATION BLOWS/FT. (⊗) (10 20 30 40 50+)

DEPTH (FT)	SAMPLE NO.	SAMPLE TYPE	SAMPLE DISTANCE (IN)	RECOVERY (IN)	DESCRIPTION OF MATERIAL	ELEVATION (FT)	STANDARD PENETRATION BLOWS/FT.
					SURFACE ELEVATION		
0					2" ASPHALT/6" STONE		
	1	SS	24	24	Silty and Clayey Fine SAND, Grayish Brown, Dry, Medium Dense, (FILL)		26
	2	SS	24	24	Silty CLAY, Orange and Gray Mottled, Moist, Very Stiff, (CL)		18
5	3	SS	24	24	Clayey Fine to Medium SAND, Orangish Gray, Moist, Medium Dense, (SC)		17
	4	SS	24	24	Silty Fine to Medium SAND, Tan, Wet to Saturated, Loose to Medium Dense, (SM)		13
	5	SS	24	24			8
10	6	SS	24	24			9
	7	SS	24	24	Silty Fine to Coarse SAND, Trace Clay Lenses, Gray, Wet to Saturated, Loose to Medium Dense, (SP-SM)		6
15							
	8	SS	24	24			16
20							
	9	SS	24	24			16
25							
	10	SS	24	24			18
30							

CONTINUED ON NEXT PAGE.

THE STRATIFICATION LINES REPRESENT THE APPROXIMATE BOUNDARY LINES BETWEEN SOIL TYPES IN-SITU THE TRANSITION MAY BE GRADUAL

WL 7.5 FEET WS OR (WD)	BORING STARTED 05-18-94	
WL BCR ACR	BORING COMPLETED 05-18-94	CAVE IN DEPTH @
WL	RIG FOREMAN FISHBURNE	DRILLING METHOD HOLLOW STEM AUGER

OWNER	JOB #	BORING #	SHEET
UNITED STATES NAVY	N1273	B-5	2 OF 2
PROJECT NAME WATER SURVIVAL TRAINING POOL (P-506T)	ARCHITECT-ENGINEER KROSKIN DESIGN GROUP		

SITE LOCATION
MCAS - CHERRY POINT, NORTH CAROLINA

CALIBRATED PENETROMETER TONS/FT.^{2} 1 2 3 4 5+

PLASTIC LIMIT % X — WATER CONTENT % ● — LIQUID LIMIT % Δ

10 20 30 40 50+

STANDARD PENETRATION BLOWS/FT. ⊗ 10 20 30 40 50+

DEPTH (FT)	SAMPLE NO.	SAMPLE TYPE	SAMPLE DISTANCE (IN)	RECOVERY (IN)	DESCRIPTION OF MATERIAL	ELEVATION (FT)	STANDARD PENETRATION BLOWS/FT.
					SURFACE ELEVATION		
30							
	11	SS	24	24			19
35							
	12	SS	24	24			21
40							
					Silty Fine to Medium SAND, With Marine Shell Fragments, Light Gray, Wet, Dense to Very Dense, (SM)		
	13	SS	24	24			50
45							
	14	SS	24	24			64
50							
					Silty Fine SAND, Grayish Green, Moist, Medium Dense, (SM)		
	15	SS	24	24			15
55							
	16	SS	24	24			19
60							

END OF BORING @ 60.0'

THE STRATIFICATION LINES REPRESENT THE APPROXIMATE BOUNDARY LINES BETWEEN SOIL TYPES IN-SITU THE TRANSITION MAY BE GRADUAL

WL 7.5 FEET WS OR WD	BORING STARTED 05-18-94	
WL BCR ACR	BORING COMPLETED 05-18-94	CAVE IN DEPTH @
WL	RIG FOREMAN FISHBURNE	DRILLING METHOD HOLLOW STEM AUGER

OWNER	JOB #	BORING #	SHEET
UNITED STATES NAVY	N1273	B-6	1 OF 1
PROJECT NAME WATER SURVIVAL TRAINING POOL (P-506T)	ARCHITECT-ENGINEER KROSKIN DESIGN GROUP		

SITE LOCATION
MCAS – CHERRY POINT, NORTH CAROLINA

CALIBRATED PENETROMETER TONS/FT.^{2} 1 2 3 4 5+

PLASTIC LIMIT % X — WATER CONTENT % ● — LIQUID LIMIT % Δ

STANDARD PENETRATION BLOWS/FT. ⊗ 10 20 30 40 50+

DEPTH (FT)	SAMPLE NO.	SAMPLE TYPE	SAMPLE DISTANCE (IN)	RECOVERY (IN)	DESCRIPTION OF MATERIAL	ELEVATION (FT)	STANDARD PENETRATION BLOWS/FT.
					SURFACE ELEVATION		
0	1	SS	24	24	Silty CLAY, Trace Sand, Orange and Gray Mottled, Moist, Medium Stiff to Stiff, (CL)		10
	2	SS	24	24			14
5	3	SS	24	24			13
	4	SS	24	24	Silty Fine to Medium SAND, Tan, Moist, Medium Dense, (SM)		25
10	5	SS	24	24			22
					END OF BORING @ 10.0'		
15							
20							
25							
30							

THE STRATIFICATION LINES REPRESENT THE APPROXIMATE BOUNDARY LINES BETWEEN SOIL TYPES IN-SITU THE TRANSITION MAY BE GRADUAL

WL 7.5 FEET WS OR (WD)	BORING STARTED 05-18-94	TOPSOIL DEPTH: 6"
WL BCR ACR	BORING COMPLETED 05-18-94	CAVE IN DEPTH @
WL	RIG FOREMAN FISHBURNE	DRILLING METHOD HOLLOW STEM AUGER

OWNER	JOB #	BORING #	SHEET
UNITED STATES NAVY	N1273	B-7	1 OF 1

PROJECT NAME: WATER SURVIVAL TRAINING POOL (P-506T)

ARCHITECT-ENGINEER: KROSKIN DESIGN GROUP

ECS LTD

SITE LOCATION: MCAS – CHERRY POINT, NORTH CAROLINA

CALIBRATED PENETROMETER TONS/FT.^{2}: 1 2 3 4 5+

PLASTIC LIMIT % X — WATER CONTENT % ● — LIQUID LIMIT % Δ: 10 20 30 40 50+

STANDARD PENETRATION BLOWS/FT. ⊗: 10 20 30 40 50+

DEPTH (FT)	SAMPLE NO.	SAMPLE TYPE	SAMPLE DISTANCE (IN)	RECOVERY (IN)	DESCRIPTION OF MATERIAL	ELEVATION (FT)	STANDARD PENETRATION BLOWS/FT.
					SURFACE ELEVATION		
0	1	SS	24	24	Silty Fine to Medium SAND, Orange to Tan, Moist, Medium Dense, (SM-FILL)		22
	2	SS	24	24	Silty CLAY, Trace Sand, Orange and Gray Mottled, Moist, Stiff, (CL)		10
5	3	SS	24	24			12
	4	SS	24	24	Silty Fine to Medium SAND, Tan, Moist, Medium Dense, (SM)		24
	5	SS	24	24			21
10					END OF BORING @ 10.0'		
15							
20							
25							
30							

THE STRATIFICATION LINES REPRESENT THE APPROXIMATE BOUNDARY LINES BETWEEN SOIL TYPES IN-SITU THE TRANSITION MAY BE GRADUAL

WL 7.5 FEET WS OR WD	BORING STARTED 05-18-94	TOPSOIL DEPTH: 6"
WL BCR ACR	BORING COMPLETED 05-18-94	CAVE IN DEPTH @
WL	RIG FOREMAN FISHBURNE	DRILLING METHOD HOLLOW STEM AUGER

Appendix III

Laboratory Test Results

SUMMARY OF LABORATORY TEST DATA

PROJECT
Water Survival Training Pool
Cherry Point, NC

ECS PROJECT No.
N-1273

BORING NUMBER	SAMPLE NUMBER	DEPTH (Ft.)	MOISTURE CONTENT%	% PASSING No. 200	PLASTICITY LL / PI	USCS SYMBOL
B-1	1	0-2	9.1			CL
B-1	2	2-4	18.7			CL
B-1	3	4-6	31.3			SP-SM
B-1	4	6-8	22.2			SP-SM
B-1	5	8-10	23.2			SP-SM
B-1	6	10-12	24.2			SP-SM
B-2	1	0-2	9.4			CL
B-2	2	2-4	27.2			CL
B-2	3	4-6	26.9			CL
B-2	4	6-8	25.2			SP-SM
B-2	5	8-10	22.6			SP-SM
B-2	6	10-12	25.7			SP-SM

SUMMARY OF LABORATORY TEST DATA

PROJECT
Water Survival Training Pool
Cherry Point, NC

ECS PROJECT No.
N-1273

BORING NUMBER	SAMPLE NUMBER	DEPTH (Ft.)	MOISTURE CONTENT%	% PASSING No. 200	PLASTICITY LL / PI	USCS SYMBOL
B-3	1	0-2	9.8			FILL
B-3	2	2-4	11.3			SM
B-3	3	4-6	22.1			CL
B-3	4	6-8	13.8			SM
B-3	5	8-10	38.1			SM
B-3	6	10-12	22.8			SP-SM
B-4	1	0-2	8.8			FILL
B-4	2	2-4	16.8			CL
B-4	3	4-6	27.5			CL
B-4	4	6-8	27.9			SM
B-4	5	8-10	20.3			SM
B-4	6	10-12	22.6			SM

SUMMARY OF LABORATORY TEST DATA

PROJECT
Water Survival Training Pool
Cherry Point, NC

ECS PROJECT No.
N-1273

BORING NUMBER	SAMPLE NUMBER	DEPTH (Ft.)	MOISTURE CONTENT%	% PASSING No. 200	PLASTICITY LL / PI	USCS SYMBOL
B-5	1	0-2	7.0			FILL
B-5	2	2-4	18.6		34 / 17	CL
B-5	3	4-6	17.1			SC
B-5	4	6-8	24.0			SM
B-5	5	8-10	22.8	10.4		SM-SP
B-5	6	10-12	23.2			SM
B-5	7	13-15		30.4		SM
B-5	9	23-25		5.0		SP
B-5	10	28-30		11.9		SP-SM
B-5	13	43-45		3.9		SP
B-5	15	53-55		23.4		SM
B-6	1	0-2	16.4			CL
B-6	2	2-4	24.4			CL
B-6	4	6-8	36.6			CL

SUMMARY OF LABORATORY TEST DATA

PROJECT
Water Survival Training Pool
Cherry Point, NC

ECS PROJECT No.
N-1273

BORING NUMBER	SAMPLE NUMBER	DEPTH (Ft.)	MOISTURE CONTENT%	% PASSING No. 200	PLASTICITY LL / PI	USCS SYMBOL
B-7	1	0-2	8.9			FILL
B-7	2	2-4	16.5			CL
B-7	4	6-8	16.3			SM

LABORATORY TEST SUMMARY

PROJECT: Water Survival Training Pool
LOCATION: Cherry Point, NC

ECS Job No.:N-1273
DATE:5-26-94

SAMPLE No.	DEPTH (FT.)	MAX. DRY DENSITY	OPT. MOIST.	LL %	PI %	MINUS 200 (%)	CBR (Unsoaked)	CBR (Soaked)	SWELL (%)	USCS SYMBOL
CBR- 1	1-2	107.4 pcf	16.9	42	23	52.2	13	5	.9	CL

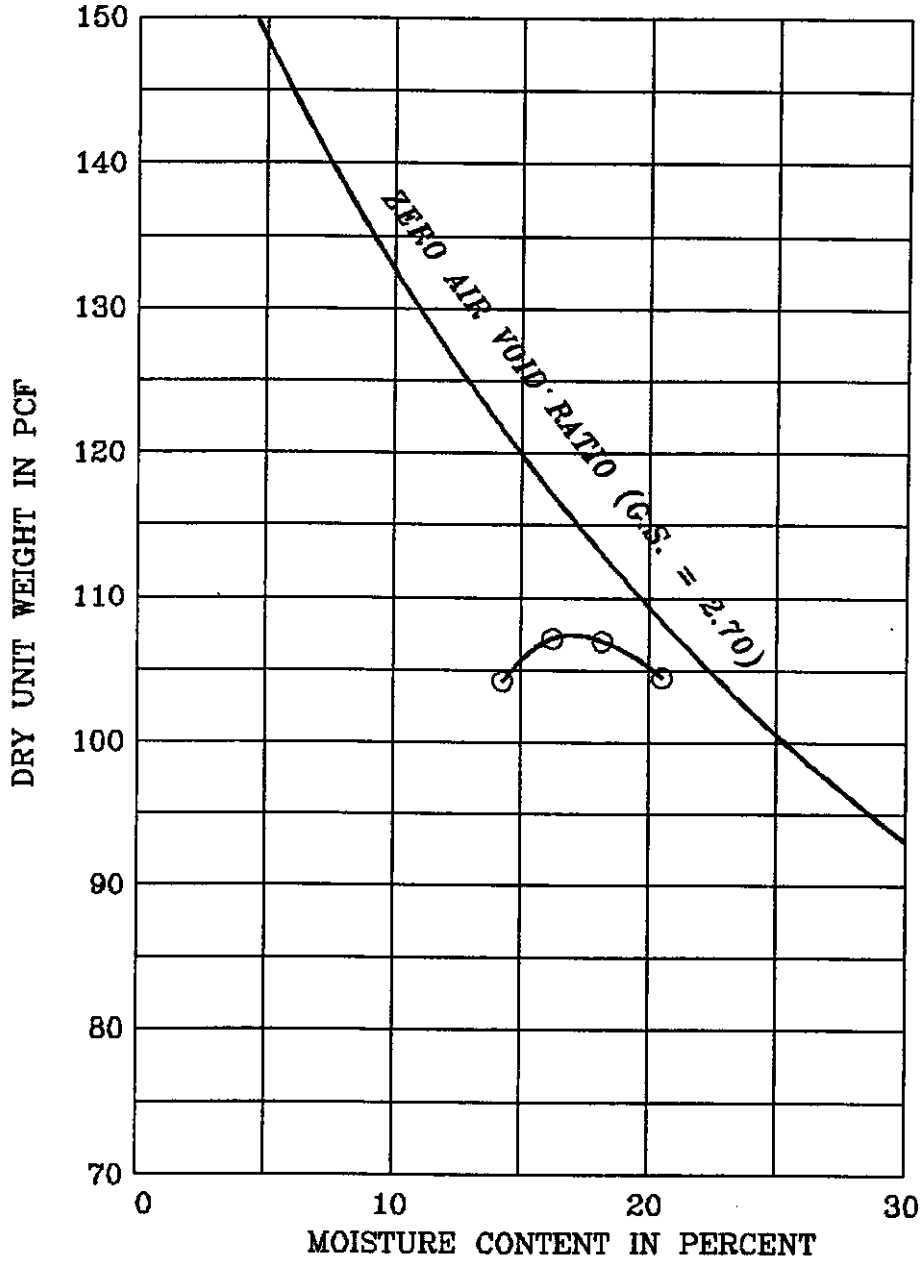

SYMBOL	SAMPLE LOCATION	DEPTH (ft)	DESCRIPTION	TEST METHOD	OPTIMUM MOISTURE (%)	MAXIMUM DRY DENSITY (pcf)
O	CBR-1	1-2	Brown fine sandy silty *	ASTM D698	16.9	107.4

Remark : * CLAY (CL)

Project No.N1273	Water Survival Training Pool
ECS, Ltd.	COMPACTION TEST Figure No.Pr-1

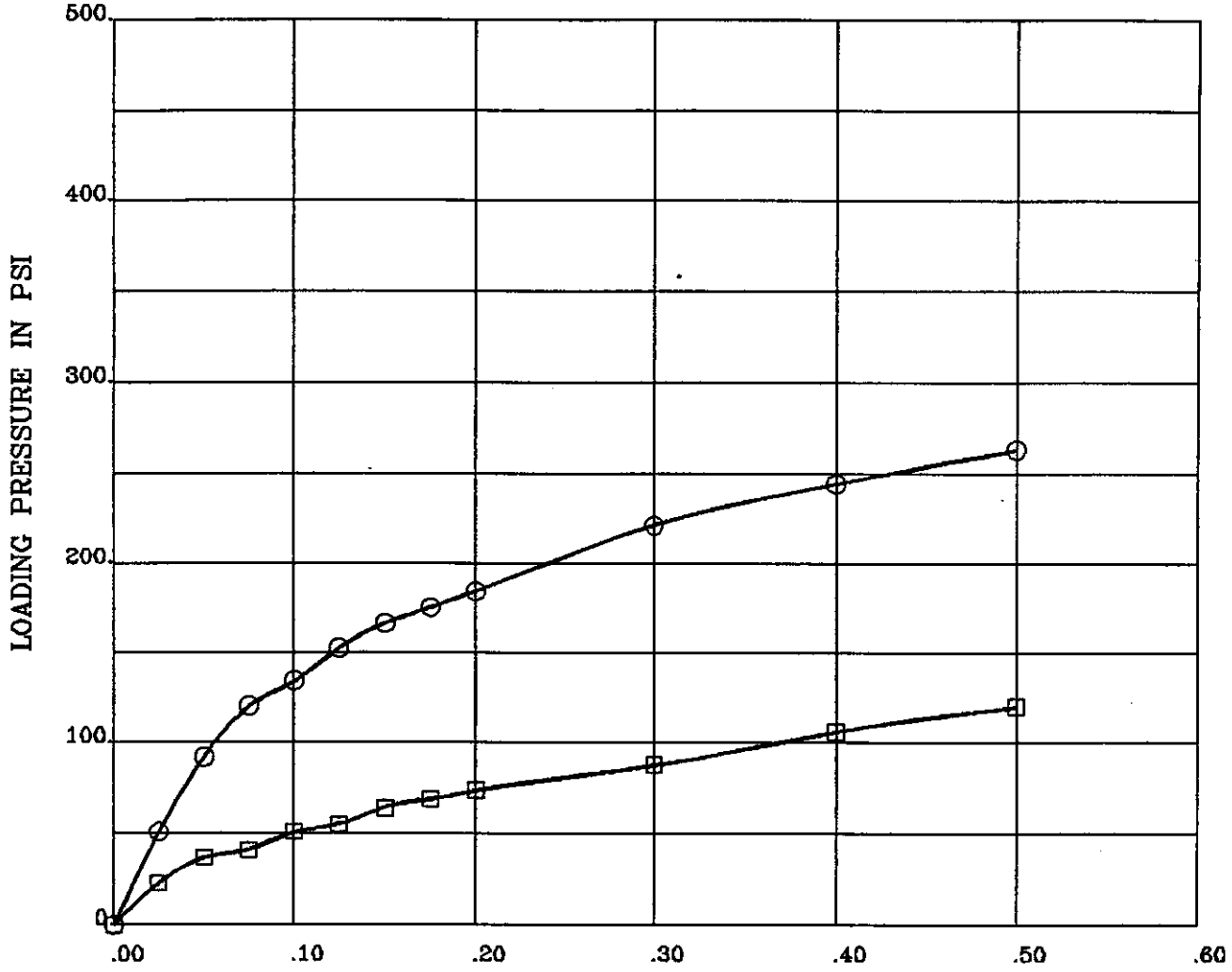

SAMPLE	: CBR-1	DEPTH (ft)	: 1 - 2
WATER CONTENT (%)	: 17.0	DRY DENSITY (PCF)	: 107.7
O. M. C. (%)	: 16.9	MAX. DRY DENSITY (PCF)	: 107.4
RELATIVE COMPACTION	: 100	PERCENT SWELLING (%)	: .9
DESCRIPTION	: Brown fine sandy silty CLAY		

SYMBOL	SAMPLE	C.B.R.(0.1 in)	C.B.R.(0.2 in)	SOAKED MOISTURE CONTENT (%)	UPPER	MIDDLE
○	UNSOAKED	13	12		24.4	
□	SOAKED	5	5			

Remark:

Project No.N-1273	Project :Water Survival Training Pool
ECS, Ltd.	CALIFORNIA BEARING RATIO Figure No.CBR-1

ENGINEERING CONSULTING SERVICES, LTD.
Geotechnical • Construction Materials • Environmental

May 11, 1993

Mr. Jay Aftel, AIA
Kroskin Design Group
6160 Kempsville Circle
Suite 310A
Norfolk, Virginia 23502

ECS Project No. N1221

Reference: Report of Subsurface Exploration and Geotechnical Engineering Analysis
for the Proposed Bachelor Enlisted Quarters (BEQ)
FY96 BRAC MCON Project P-090T
MCAS, Cherry Point, North Carolina

Dear Mr. Aftel:

Engineering Consulting Services, Ltd. has completed the subsurface exploration and geotechnical analysis for the above referenced project. A report including the results of our subsurface exploration and engineering analysis, boring logs, and boring log information is submitted herein. This exploration and analysis was performed in general accordance with our proposal N182-2 and your requested scope of services.

We have enjoyed being of service to you during the design phase of this project. If you should have any questions regarding the information and recommendations contained in the accompanying report or if we can be of further assistance, please do not hesitate to contact us.

Respectfully,

ENGINEERING CONSULTING SERVICES, LTD.

David E. Simonte
Project Engineer

Roland E. Dubbé, P.E.
Vice President/Norfolk Regional Manager

NORTH CAROLINA PROFESSIONAL SEAL 10916 ENGINEER ROLAND E. DUBBE

DES/cd/N122IRPT

Copies: (6) Kroskin Design Group (for distribution)

341 Cleveland Place, Suite 102 • Virginia Beach, Virginia 23462 • (804) 499-9100 • Fax (804) 499-2404

TABLE OF CONTENTS

	PAGE
PROJECT OVERVIEW	
· Executive Summary	1
· Scope of Work	2
· Proposed Construction	2
EXPLORATION PROCEDURES	
· Subsurface Exploration Procedures	3
· Laboratory Analysis Program	3
EXPLORATION RESULTS	
· Site Conditions	4
· Subsurface Conditions	5
· Groundwater Observations	6
ANALYSIS AND RECOMMENDATIONS	
· Foundation Evaluation	7
· Floor Slab Design	10
· Subgrade Preparation and Earthwork Operations	11
· Construction Considerations	12
· Closing	13
APPENDIX	
I. Boring Location Sketch	
II. Soil Boring Logs	
III. Laboratory Test Results	
IV. Unified Soil Classification System	
V. Reference Notes for Boring Logs	

PROJECT OVERVIEW

Executive Summary

This report presents the results of our subsurface exploration and engineering analysis for the proposed Bachelor Enlisted Quarters (BEQ), FY 96-BRAC MCON Project P-090T. The proposed project site is situated on the easternmost side of 4th Avenue between "C" Street and "E" Street at the Marine Corps Air Station (MCAS) in Cherry Point, North Carolina.

It is our understanding that the proposed project will include the construction of two (2), three story structures comprised of masonry bearing walls and columns supported by grade beams with slab-on-grade first level floor. The project Structural Engineer indicated that grade beam loading associated with this type of structure will be on the order 5 to 6 kips per foot.

Considering the significant variations in the foundation bearing soils and potential for excessive differential settlement we recommend that the proposed grade beam foundation be supported on a pile foundation system. First level floor systems may be constructed as slab-on-grade directly supported by controlled structural fill placed and compacted over prepared existing subgrade.

Based on the allowable pile capacities presented herein, the anticipated structural loading, and the subsurface soil conditions total settlements of structures supported by deep foundations are anticipated to be less than one-half inch with differential settlements of approximately one-half this amount.

Further information regarding the subsurface exploration procedures used, groundwater conditions, foundations, floor slab, earthwork operations, and construction considerations are included in the text of this report.

Scope of Work

The conclusions and recommendations presented in this report are based on fourteen (14) soil test borings performed under the direction of Engineering Consulting Services, Ltd. Twelve (12) soil test borings (six at each building site) were extended to a depth of 70 feet below the existing grade within the limits of the proposed building construction. Two (2) soil test borings (one at each building site) were extended to a depth of 20 feet below the existing grade within the proposed stormwater infiltration area. The locations of the borings were staked in the field by ECS personnel and are shown on the sketch included in the appendix of this report. In addition, a site reconnaissance was performed by the Project Geotechnical Engineer to explore the existing field conditions and general site characteristics.

The purpose of this exploration was to explore the soil and groundwater conditions at the site and to develop soils related engineering recommendations to guide design and construction of foundations for the project.

Proposed Construction

It is our understanding that the proposed BEQ buildings will be three story structures constructed of masonry bearing walls and columns supported by grade beams. As indicated by the project Structural Engineer, grade beam foundation loading will be on the order of about 5 to 6 kips per foot. Furthermore, we anticipate that the grade beam foundation system will be pile supported.

We expect that the first level floor system for the structure will consist of a slab-on-grade. We anticipate that controlled fill required to raise the site to design floor elevation will be on the order of 24 to 36 inches. Proposed finish floor will be at an elevation of about 27.

EXPLORATION PROCEDURES

Subsurface Exploration Procedures

Twelve (12) soil test borings were drilled to depths of seventy (70) feet from existing surface grade within the proposed building area, and two (2) soil test borings were extended to a depth of twenty (20) feet within the proposed stormwater infiltration areas. The borings were performed with a skid mounted auger drill rig which utilized hollow stem augers and/or mud rotary (wash bore procedure) to advance the boreholes. Representative soil samples were obtained by means of the split-barrel sampling procedure in accordance with ASTM Specification D-1586. In this procedure, a 2-inch O.D., split-barrel sampler is driven into the soil a distance of 18 inches by a 140-pound hammer falling 30 inches. The number of blows required to drive the sampler through a 12-inch interval is termed the Standard Penetration Test (SPT) value and is indicated for each sample on the boring logs. This value can be used as a qualitative indication of the in-place relative density and relative consistency of cohesionless soils and cohesive soils, respectively. This indication is qualitative, since many factors can significantly affect the standard penetration resistance value and prevent a direct correlation between drill crews, drill rigs, drilling procedures, and hammer-rod-sampler assemblies.

A field log of the soils encountered in the borings was maintained by the drill crew. After recovery, each sample was removed from the sampler and visually classified. Representative portions of each sample were then sealed and brought to our laboratory in Virginia Beach, Virginia for further visual examination and laboratory testing.

Laboratory Analysis Program

An experienced geotechnical engineer visually classified each splitspoon soil sample on the basis of texture and plasticity in accordance with the Unified Soil Classification System. Representative soil samples were selected and subjected to moisture contents, sieve analysis and Atterberg Limits testing in order to substantiate the visual classifications. The group symbols for each soil type are indicated in parentheses following the soil descriptions on the boring logs. A brief explanation of the USC System is included with this report. The geotechnical engineer grouped the various soil types into the major zones noted on the boring logs. The stratification lines designating the interfaces between earth materials on the boring logs are approximate; in situ, the transitions may be gradual.

The soil samples will be retained in our Virginia Beach laboratory for a period of 60 days, after which they will be discarded unless other instructions are received as to their disposition.

EXPLORATION RESULTS

Site Conditions

The general project site is located on the easternmost side of 4th Avenue between "C" Street and "E" Street at the Marine Corps Air Station in Cherry Point, North Carolina. The area proposed for the new BEQ #1 is situated between "D" Street and "E" Street. The area proposed for the new BEQ #2 is situated to the immediate southeast of existing Building 286 between "C" Street and "D" Street.

At the time of our field reconnaissance, a two-story masonry structure (Building 234) was located within the construction limits of the proposed new BEQ #1 building. This building, which was occupied and being used for enlisted barracks, was situated on the northwest half of the site.

A two-story masonry structure (Building 207) was located within the construction limits of the proposed new BEQ #2 building. This building, which was vacant and formerly used as enlisted barracks, was situated on the northwest half of the site. The proposed project sites are bound to the east with asphalt pavements. Buried electrical, phone, cable, water, sewage and steam utilities traverse the site. Existing site elevations range from about 23 to 25 feet.

It is noted that the open areas (southeast half of the site) at both the BEQ #1 and BEQ #2 locations were previously occupied by two story masonry structures utilized for enlisted barracks. These former structures had just recently been razed, and as such, isolated shallow surface fill and/or disturbed surface material and associated building rubble was observed across the site. It is further noted that the previous on-site structures were pile supported, as indicated by LANTDIV personnel. In this regard, we caution that these buried obstructions (abandoned piles) could be encountered during new construction activities performed within these sites.

Subsurface Conditions

Geologically, the subject site is located in the Coastal Plain Physiographic Province of eastern North Carolina. The site and vicinity are underlain by formations which typically consists of pebbly and cobbly, fine to coarse Sand which grades upward into Clayey and Silty fine SAND, and Sandy Clay and Sandy Silt. A generalized cross section of the areas indicates that those formations are underlain by lower Tertiary deposits, Cretaceous age deposits, and finally metasedimentary and metaigneous rocks of Paleozoic and upper Proteozoic age.

Our subsurface exploration and site reconnaissance determined that the surface of the site generally consists of variable depths (12 to 24 inches) of fill and/or disturbed surface material containing

building rubble and construction debris. This fill material is remnant of past development and/or construction in this area. Underlying the surface material, the subsurface profile consisted primarily of erratic deposits of Silty and Clayey SANDS with interbedded deposits of Silty and Sandy CLAYS. The granular soils (Sand) were observed to be loose to very dense, with the Standard Penetration Test ("N") values ranging between 3 and 50 (+) blows-per-foot (BPF). The "N" values recorded through this interbedded cohesive soil (Clay) deposits typically ranged between 0 and 11 BPF, indicating that these soils are of very soft to medium stiff consistency.

Groundwater Observations

Observations for groundwater were made during sampling and upon completion of the drilling operations at each boring location. In auger drilling operations, water is not introduced into the boreholes, and the groundwater position can often be determined by observing water flowing into or out of the boreholes. Furthermore, visual observation and moisture content testing of the soil samples retrieved during the sampling and drilling exploration can often be used in evaluating the groundwater conditions. Because the drilling operations utilized both hollow stem auger procedures and mud rotary procedures (in which water and a drilling fluid are introduced into the borehole), accurate groundwater readings at completion of the borings was not recorded.

Based on the available results of our observations, laboratory analysis (moisture content testing) and split barrel sampling performed at each boring location, the groundwater level is estimated to be at depths of about 8 to 10 feet from existing grade. In general, fluctuation of the groundwater table on the order of 24 inches can occur due to seasonal conditions.

Typically, the water table surface in the Coastal Plain Physiographic Province is generally a subdued replica of the land surface topography. Groundwater flows from areas of higher elevation to areas of

lower elevation, with groundwater typically recharging along areas of higher elevation and discharging to down gradient streams and other surface bodies of water.

ANALYSIS AND RECOMMENDATIONS

Foundation Evaluation

Based on the results of our exploration and analysis, we recommend that the proposed BEQ buildings be supported by a pile foundation system. Due to the erratic nature of the subsurface profile and the potential for excessive differential settlements created by the non-uniform bearing conditions it is our opinion that spread foundations are unsuitable for the proposed structures on these sites.

For the design of the piling foundation system the following pile cross-section, embedment criteria, and capacities are recommended. Two pile sizes with corresponding capacities are submitted for cost and suitability evaluation purposes. It is our recommendation that the Project Structural Engineer determine the most suitable pile.

Pile Type	Pile Cross Section	Pile Embedment (Feet)	Allowable Capacities (Tons) Compression - Tension - Lateral		
Concrete	12" x 12"	45	50	20	5.0
Concrete	12" x 12"	55	60	20	5.0
Timber	7" Tip	35	25	10	2.0
Timber	7" Tip	40	30	15	2.0

It should noted that pile embedment depth is referenced from existing site grades. It is also noted that the allowable pile capacities presented above are based on a factor of safety of approximately 2.0 and

that total pile settlements are anticipated to be less than 0.5 inch; that is, pile movement required to mobilize soil resistance (approximately 0.15 to 0.25 inches) plus pile shortening.

For piling installation, the following recommendations are submitted:

1. The piles should be driven to the dynamic driving resistance required, as determined by the Geotechnical Engineer. In this regard, compatibility of pile driving equipment and the pile type being driven is an essential element in achieving the required penetration and a satisfactory pile foundation. All equipment should be subject to the approval of the Geotechnical Engineer. We recommend that the pile driving rig be equipped with fixed leads and the pile hammer have an energy appropriate for the piles being driven. We recommend that the hammer used be of sufficient capacity such that the energy delivered to the pile in ft-lbs is at least equal to the weight of the pile in pounds.

2. In order to minimize driving difficulties due to densification of the soils and the reduction in capacity due to group action of the piles, it is recommended that the piles be driven with an on-center spacing of at least three (3) feet.

3. In order to enhance the efficiency of the pile installation, and minimize damage to nearby structures as a result of the transfer of driving energy through the near surface soils, the location of piles to be driven from existing site grade may be pre-drilled to depths of 15 feet below the existing grades. Increasing of the pre-drill depth should be done only under the advisement of the Geotechnical Engineer

4. The installation of all piles should be in accordance with the local Building Code requirements. In addition, the installation of all piles should be observed by a qualified inspector under the direction of a registered Geotechnical Engineer. the engineer

should verify and record all aspects of the installation. In general, the engineer or his representative should:

a) Be familiar with all aspects of the installation.

b) Be present continuously during driving.

c) Record and approve the dimensions of each pile, locate and report any obvious defects.

d) Count and record the blows for each foot of driving.

e) Record energy rating of hammer and adjust where appropriate for chamber pressure, such as in the case of a diesel hammer.

f) Have knowledge of soil conditions at the site and the minimum required penetration of each pile.

g) Be cognizant of intended support mechanisms of piles on which to base approval or rejection or pre-drilling, etc.

h) Have authority to hold driving when unanticipated difficulties or conditions are encountered.

It is also recommended that at least eight (8) indicator piles be driven per BEQ site to the specified pile embeddment depth and/or a suitable resistance as calculated by an acceptable pile driving formula prior to the start of production pile installation. It is also recommended that at least one of these indicator piles per BEQ site, preferably the pile demonstrating the lowest driving resistance, be load tested in accordance with ASTM D1143 procedures. Depending on the results of these indicator piles and load testing some adjustments to the design capacities or depths may be necessary. Correlation and evaluation between the driving of these indicator piles and load testing, and the driving data collected during production piles installation should be performed. It is noted that due to

the erratic nature of the subsurface profile, some variations in actual pile embeddment depth and driving resistance is expected.

Floor Slab Design

For the design and construction of the slab-on-grade floor for the proposed building, it is recommended that all existing vegetation, topsoil, heavy rootmat, pavements, abandoned foundations and any other unstable or unsuitable materials be removed from these areas. The stripped area should be observed by an experienced Geotechnical Engineer during the time of construction in order to aid in locating any additional unsuitable materials which should be removed. As previously noted within the "Site Conditions" section of this report, isolated fill material and scattered building rubble from previous development on-site was observed on or near the surface during our field exploration study. With regard to floor slab-on-grade considerations, isolated building rubble (excluding timber products) if determined to be non-threatening to the performance of grade supported floor slabs, may remain in-place.

Engineered fill material required to raise the building site to the design floor slab subgrade elevation should consist of an approved granular fill material (SAND) classified as SM, SP-SM, SP or better containing less than about 20% by weight Silt or Clay and free of debris. This material should be placed in lifts not exceeding 8 inches in loose thickness, moisture conditioned to within ±3% of the optimum moisture content, and compacted to a minimum of 95% of the maximum density obtained in accordance with ASTM Specification D-698, Standard Proctor Method.

We recommend the slabs on grade be underlain by a minimum of 4 inches of a clean granular material (porous fill) having a maximum aggregate size of 1.5 inches and no more than 2% passing the #200

Sieve. This granular layer will facilitate the fine grading of the subgrade, provide more uniform bearing conditions, and help minimize the rise of water to the bottom of the slab (capillary action).

Subgrade Preparation and Earthwork Operations

The subgrade preparation for floor slab support should consist of stripping all vegetation, heavy rootmat, topsoil, old pavements, abandoned foundations, and any other unstable or unsuitable material from the proposed building and new pavement areas (if applicable). We recommend the earthwork clearing be extended a minimum of 5 feet beyond the building limits and 2 feet beyond the pavement limits.

After stripping to the desired grade, and prior to fill placement, the stripped surface should be observed by an experienced geotechnical engineer or his authorized representative. Proofrolling using a 10-ton drum roller or a loaded dump truck having an axle weight of at least 10 tons may be used at this time to aid in identifying localized soft or unsuitable material. Any soft or unsuitable materials encountered during this proofrolling should be removed and replaced with an approved backfill compacted to the criteria provided in the following paragraph. It is noted that the Geotechnical Engineer should be present during initial site stripping operations in order to better direct undercut depth requirements. As previously noted within the "Site Conditions" section of this report, isolated fill material and scattered building rubble from previous development on-site was observed on or near the surface during our field exploration study. With regard to floor slab-on-grade considerations, isolated building rubble (excluding timber products) if determined to be non-threatening to the performance of grade supported floor slabs may remain in-place.

Fill used to support any part of the proposed slab-on-grade systems should be placed in lifts not exceeding 8 inches in loose thickness, moisture conditioned to within ±3% of the optimum moisture

content, and compacted to at least 95% of the maximum dry density obtained in accordance with ASTM Specification D698, Standard Proctor Method.

At this time it is unknown what volume of unsuitable surface material may require removal from below proposed slabs. It is therefore recommended that the construction contract include a fair unit rate for undercut below subgrade elevations and backfilling with a clean Sand Fill (select material) and/or a crushed angular gravel.

Construction Considerations

All abandoned site utilities should be properly removed and/or capped as necessary. Abandoned utility trenches which lie within the limits of the new building should be evaluated for stability by proofrolling and probing as required. In areas where abandoned utilities are removed, the open trenches should be properly backfilled with a select material as discussed in the preceding section. As previously mentioned under the "Site Conditions" section of this report, we anticipate that buried obstructions such as abandoned piles from previous site development may be encountered during new construction activities at these sites.

Proper compaction control of the building pad fill is an important aspect of this project. Therefore, we recommend that all fill operations be observed full-time by a qualified soil technician to determine if minimum compaction requirements are being met.

When wet, the shallower subgrade soils will degrade quickly with disturbance from contractor operations. Therefore, good site drainage should be maintained during earthwork operations so as to help maintain the integrity of the soil.

Control of groundwater and/or perched water may become difficult during construction of excavations and general cutting across the site. We expect that dewatering in trenches and shallow excavations could be accomplished by pumping from sumps. The specifications should alert the contractor to the potential presence of subsurface water, and it should be incumbent on the contractor to provide the means by which to satisfactorily dewater the site.

Closing

We recommend that the pile installation and construction activities be monitored by a qualified geotechnical engineering firm to provide the necessary overview and to check the suitability of the subgrade soils for support of the shallow foundations and slabs. ECS, Ltd. can provide these services and would be happy to submit unit rates for the required services during project cost estimation.

APPENDIXES

I. **Boring Location Sketch**

II. **Soil Boring Logs**

III. **Laboratory Test Results**

IV. **Unified Soil Classification System**

V. **Reference Notes For Boring Logs**

Appendix I

Boring Location Sketch

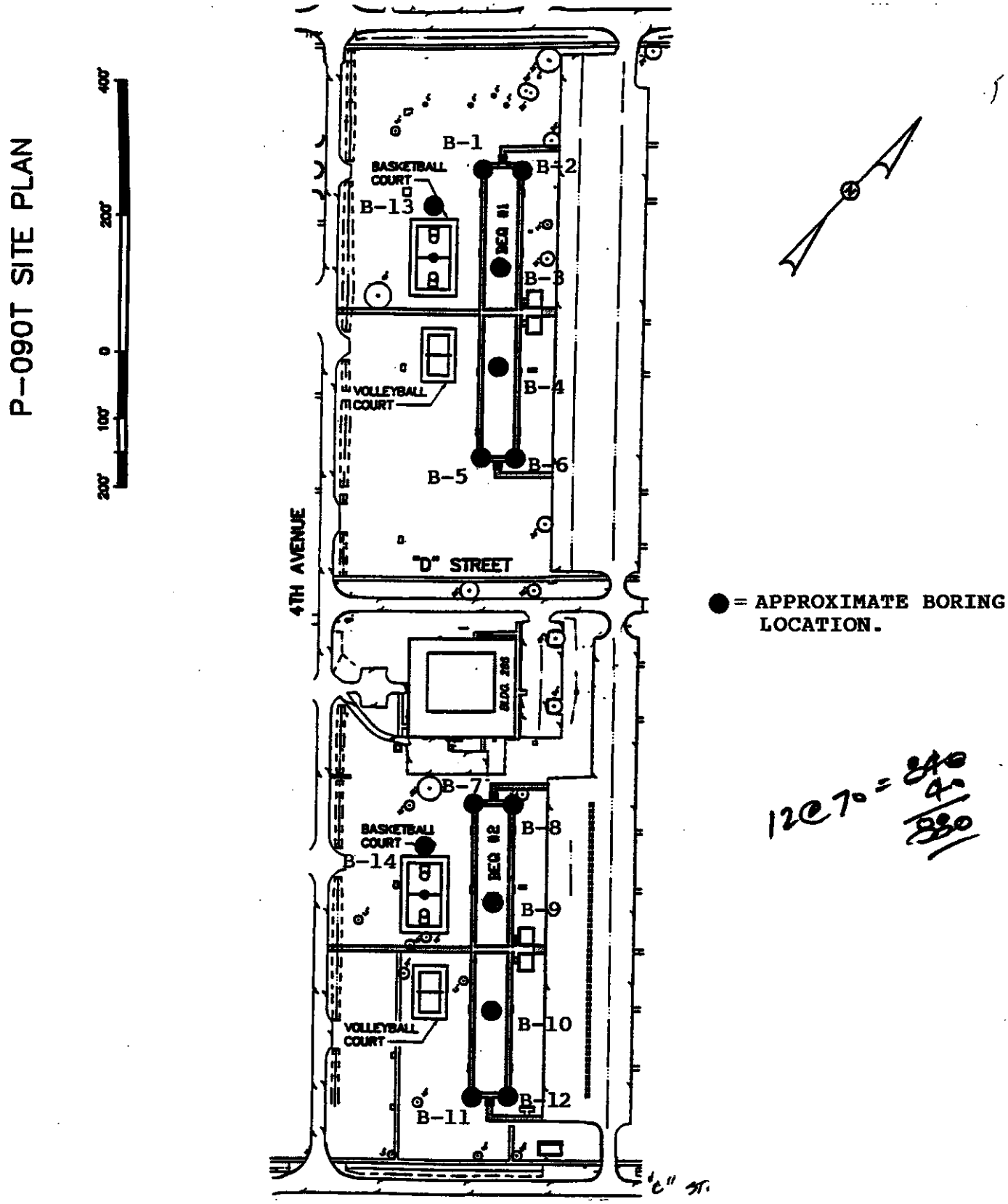

ECS LTD ENGINEERING CONSULTING SERVICES, LTD	BORING LOCATION DIAGRAM BACHELORS ENLISTED QUARTERS (BEQ)				
	MCAS, CHERRY POINT, NORTH CAROLINA				
	RAC	DES	MAY 11, 1994	N1221	1 OF 1

Appendix II

Soil Boring Logs

OWNER	JOB #	BORING #	SHEET
UNITED STATES NAVY	N1221	B-1	1 OF 3

PROJECT NAME	ARCHITECT-ENGINEER
BEQ (P-090T)	KROSKIN DESIGN GROUP

SITE LOCATION
MCAS CHERRY POINT, NORTH CAROLINA

CALIBRATED PENETROMETER TONS/FT.^{2} 1 2 3 4 5+

PLASTIC LIMIT % X — WATER CONTENT % ● — LIQUID LIMIT % Δ

10 20 30 40 50+

STANDARD PENETRATION BLOWS/FT. ⊗ 10 20 30 40 50+

SURFACE ELEVATION 23.50

DEPTH (FT)	SAMPLE NO.	SAMPLE TYPE	SAMPLE DISTANCE (IN)	RECOVERY (IN)	DESCRIPTION OF MATERIAL	ELEVATION (FT)	STANDARD PENETRATION BLOWS/FT.
0	1	SS	24	24	Clayey SAND, Trace Concrete Fragments, Dark Gray and Tan, Moist, Very Loose, (FILL)	20	3
	2	SS	24	24			5
5	3	SS	24	24	Sandy CLAY, With Silt, Dark Gray, Moist to Saturated, Soft to Medium Stiff, (CL)		6
	4	SS	24	24		15	4
	5	SS	24	24	Clayey SAND, Orange and Gray Mottled, Moist, Medium Dense, (SC)		14
10	6	SS	24	24			29
					Silty Fine to Medium SAND, Light Tan, Moist to Wet, Loose to Medium Dense, (SM+SP)	10	
15	7	SS	18	18			9
						5	
20	8	SS	18	18	Silty Fine SAND, Orange and Light Gray, Moist, Loose, (SM)		8
						0	
25	9	SS	18	18			8
					Silty Fine to Coarse SAND, With Clay Lenses, Trace Clay, Gray, Saturated, Medium Dense, (SM)	−5	
30	10	SS	18	18			29

CONTINUED ON NEXT PAGE.

THE STRATIFICATION LINES REPRESENT THE APPROXIMATE BOUNDARY LINES BETWEEN SOIL TYPES IN-SITU THE TRANSITION MAY BE GRADUAL.

WL 8.0 FEET WS OR (WD)	BORING STARTED 04-05-94	TOPSOIL DEPTH: 4"
WL BCR ACR	BORING COMPLETED 04-05-94	CAVE IN DEPTH @
WL	RIG ECS FOREMAN	DRILLING METHOD WASH (WB)

OWNER	JOB #	BORING #	SHEET
UNITED STATES NAVY	N1221	B-1	2 OF 3
PROJECT NAME	ARCHITECT-ENGINEER		
BEQ (P-090T)	KROSKIN DESIGN GROUP		

SITE LOCATION
MCAS CHERRY POINT, NORTH CAROLINA

CALIBRATED PENETROMETER TONS/FT.^{2} (1, 2, 3, 4, 5+)

PLASTIC LIMIT % X — WATER CONTENT % ● — LIQUID LIMIT % Δ (10, 20, 30, 40, 50+)

STANDARD PENETRATION BLOWS/FT. ⊗ (10, 20, 30, 40, 50+)

DEPTH (FT)	SAMPLE NO.	SAMPLE TYPE	SAMPLE DISTANCE (IN)	RECOVERY (IN)	DESCRIPTION OF MATERIAL	ELEVATION (FT)	STANDARD PENETRATION BLOWS/FT.
					SURFACE ELEVATION 23.50		
30							
	11	SS	18	18	Silty Fine to Coarse SAND, Gray, Saturated, Medium Dense to Dense, (SM) [Clay Lenses at 38 Feet]	-10	17
35							
	12	SS	18	18		-15	17
40							
	13	SS	18	18		-20	11
45							
	14	SS	18	18		-25	10
50					Silty Fine to Medium SAND, With Marine Shell Fragments, Gray, Saturated, Medium Dense, (SP)		
	15	SS	18	18		-30	24
55							
	16	SS	18	18	Silty Fine SAND, Grayish Green, Moist, Medium Dense, (SM)	-35	17
60							

CONTINUED ON NEXT PAGE.

THE STRATIFICATION LINES REPRESENT THE APPROXIMATE BOUNDARY LINES BETWEEN SOIL TYPES IN-SITU THE TRANSITION MAY BE GRADUAL

WL 8.0 FEET WS OR (WD)	BORING STARTED 04-05-94	TOPSOIL DEPTH: 4"
WL BCR ACR	BORING COMPLETED 04-05-94	CAVE IN DEPTH @
WL	RIG ECS FOREMAN	DRILLING METHOD WASH (WB)

OWNER	JOB #	BORING #	SHEET
UNITED STATES NAVY	N1221	B-1	3 OF 3
PROJECT NAME	ARCHITECT-ENGINEER		
BEQ (P-090T)	KROSKIN DESIGN GROUP		

SITE LOCATION
MCAS CHERRY POINT, NORTH CAROLINA

CALIBRATED PENETROMETER TONS/FT.^{2} (1, 2, 3, 4, 5+)

PLASTIC LIMIT % (X) — WATER CONTENT % — LIQUID LIMIT % (Δ)

STANDARD PENETRATION BLOWS/FT. (⊗) (10, 20, 30, 40, 50+)

DEPTH (FT)	SAMPLE NO.	SAMPLE TYPE	SAMPLE DISTANCE (IN)	RECOVERY (IN)	DESCRIPTION OF MATERIAL	ELEVATION (FT)
					SURFACE ELEVATION 23.50	
60						40
	17	SS	18	18		
65					Silty Fine to Medium SAND, With Marine Shell Fragments, Grayish Tan, Wet, Dense, (SM-SP)	45
	18	SS	18	18		
70					END OF BORING @ 70.0'	
75						50
80						55
85						60
90						65

⊗ 28 (at 65)

⊗ 41 (at 70)

THE STRATIFICATION LINES REPRESENT THE APPROXIMATE BOUNDARY LINES BETWEEN SOIL TYPES IN-SITU THE TRANSITION MAY BE GRADUAL

WL 8.0 FEET WS OR (WD)	BORING STARTED 04-05-94	TOPSOIL DEPTH: 4"
WL BCR ACR	BORING COMPLETED 04-05-94	CAVE IN DEPTH @
WL	RIG ECS FOREMAN	DRILLING METHOD WASH (WB)

OWNER	JOB #	BORING #	SHEET
UNITED STATES NAVY	N1221	B-2	1 OF 3
PROJECT NAME	ARCHITECT-ENGINEER		
BEQ (P-090T)	KROSKIN DESIGN GROUP		

SITE LOCATION
MCAS CHERRY POINT, NORTH CAROLINA

CALIBRATED PENETROMETER TONS/FT.^{2} (1, 2, 3, 4, 5+)

PLASTIC LIMIT % (X) — WATER CONTENT % — LIQUID LIMIT % (Δ) (10, 20, 30, 40, 50+)

STANDARD PENETRATION BLOWS/FT. (⊗) (10, 20, 30, 40, 50+)

SURFACE ELEVATION 23.00

DEPTH (FT)	SAMPLE NO.	SAMPLE TYPE	SAMPLE DISTANCE (IN)	RECOVERY (IN)	DESCRIPTION OF MATERIAL	ELEVATION (FT)	STANDARD PENETRATION BLOWS/FT.
0	1	SS	24	24	Silty SAND, Trace Wood Fragments, Grayish Brown, Moist, Loose, (FILL)	20	10
	2	SS	24	24			7
5	3	SS	24	24	Silty CLAY, With Sand and Organic Fragments, Gray, Moist, Soft to Medium Stiff, (CL)		5
	4	SS	24	24	Silty CLAY, With Sand, Orange and Gray Mottled, Moist, Soft to Medium Stiff, (CL)	15	10
	5	SS	24	24	Silty Fine SAND, Light Tan, Moist to Wet, Loose to Medium Dense, (SM+SP)		18
10	6	SS	24	24		10	22
15	7	SS	18	18	Silty Fine SAND, With Interbedded Clay Lenses, Orange, Wet, Loose, (SM)		7
	8	SS	18	18		5	5
20	9	SS	18	18		0	8
25	10	SS	18	18		-5	17
30							

CONTINUED ON NEXT PAGE.

THE STRATIFICATION LINES REPRESENT THE APPROXIMATE BOUNDARY LINES BETWEEN SOIL TYPES IN-SITU THE TRANSITION MAY BE GRADUAL

WL 8.0 FEET WS OR WD	BORING STARTED 04-05-94	TOPSOIL DEPTH: 4"
WL BCR ACR	BORING COMPLETED 04-05-94	CAVE IN DEPTH @
WL	RIG ECS FOREMAN	DRILLING METHOD WASH (WB)

OWNER	JOB #	BORING #	SHEET
UNITED STATES NAVY	N1221	B-2	2 OF 3
PROJECT NAME	ARCHITECT-ENGINEER		
BEQ (P-090T)	KROSKIN DESIGN GROUP		

SITE LOCATION
MCAS CHERRY POINT, NORTH CAROLINA

CALIBRATED PENETROMETER TONS/FT.^{2} (1, 2, 3, 4, 5+)

PLASTIC LIMIT % (X) — WATER CONTENT % — LIQUID LIMIT % (Δ)

STANDARD PENETRATION BLOWS/FT. (⊗) (10, 20, 30, 40, 50+)

SURFACE ELEVATION 23.00

DEPTH (FT)	SAMPLE NO.	SAMPLE TYPE	SAMPLE DISTANCE (IN)	RECOVERY (IN)	DESCRIPTION OF MATERIAL	ELEVATION (FT)	STANDARD PENETRATION BLOWS/FT.
30					Silty Fine to Medium SAND, Light Gray, Wet, Medium Dense to Dense, (SP-SM) [Thin Clay Seams at 34 Feet]	-10	
35	11	SS	18	18			17
	12	SS	18	18		-15	28
40							
	13	SS	18	18		-20	36
45							
	14	SS	18	0		-25	29
50					Silty Fine SAND, Trace Clay, Grayish Green, Moist, Medium Dense, (SM)		
	15	SS	18	18		-30	25
55							
	16	SS	18	18		-35	21
60							

CONTINUED ON NEXT PAGE.

THE STRATIFICATION LINES REPRESENT THE APPROXIMATE BOUNDARY LINES BETWEEN SOIL TYPES IN-SITU THE TRANSITION MAY BE GRADUAL

WL 8.0 FEET WS OR (WD)	BORING STARTED 04-05-94	TOPSOIL DEPTH: 4"
WL BCR ACR	BORING COMPLETED 04-05-94	CAVE IN DEPTH @
WL	RIG ECS FOREMAN	DRILLING METHOD WASH (WB)

OWNER	JOB #	BORING #	SHEET
UNITED STATES NAVY	N1221	B-2	3 OF 3
PROJECT NAME	ARCHITECT-ENGINEER		
BEQ (P-090T)	KROSKIN DESIGN GROUP		

SITE LOCATION
MCAS CHERRY POINT, NORTH CAROLINA

CALIBRATED PENETROMETER TONS/FT.^{2} 1 2 3 4 5+

PLASTIC LIMIT % X — WATER CONTENT % ● — LIQUID LIMIT % Δ

10 20 30 40 50+

STANDARD PENETRATION BLOWS/FT. ⊗ 10 20 30 40 50+

SURFACE ELEVATION 23.00

DEPTH (FT)	SAMPLE NO.	SAMPLE TYPE	SAMPLE DISTANCE (IN)	RECOVERY (IN)	DESCRIPTION OF MATERIAL	ELEVATION (FT)
60						
					Silty Fine to Medium SAND, With Marine Shell Fragments, Grayish Tan, Wet, Dense to Very Dense, (SP-SM)	-40
65	17	SS	18	18		
						-45
	18	SS	18	18		
70					END OF BORING @ 70.0'	-50
75						-55
80						-60
85						-65
90						

105

52

THE STRATIFICATION LINES REPRESENT THE APPROXIMATE BOUNDARY LINES BETWEEN SOIL TYPES IN-SITU THE TRANSITION MAY BE GRADUAL

WL 8.0 FEET WS OR (WD)	BORING STARTED 04-05-94	TOPSOIL DEPTH: 4".
WL BCR ACR	BORING COMPLETED 04-05-94	CAVE IN DEPTH @
WL	RIG ECS FOREMAN	DRILLING METHOD WASH (WB)

OWNER	JOB #	BORING #	SHEET
UNITED STATES NAVY	N1221	B-3	1 OF 3
PROJECT NAME	ARCHITECT-ENGINEER		
BEQ (P-090T)	KROSKIN DESIGN GROUP		

SITE LOCATION
MCAS CHERRY POINT, NORTH CAROLINA

CALIBRATED PENETROMETER TONS/FT.^{2} 1 2 3 4 5+

PLASTIC LIMIT % X — WATER CONTENT % ● — LIQUID LIMIT % Δ 10 20 30 40 50+

STANDARD PENETRATION BLOWS/FT. ⊗ 10 20 30 40 50+

SURFACE ELEVATION 24.00

DEPTH (FT)	SAMPLE NO.	SAMPLE TYPE	SAMPLE DISTANCE (IN)	RECOVERY (IN)	DESCRIPTION OF MATERIAL	ELEVATION (FT)	STANDARD PENETRATION BLOWS/FT.
0	1	SS	24	24	Silty SAND, Trace Brick Fragments, Gray and Tan, Moist, Loose, (FILL)	20	8
	2	SS	24	24	Sandy CLAY, Trace Silt, Orange and Gray Mottled, Moist, Medium Stiff, (SC-CL)		6
5	3	SS	24	24			6
	4	SS	24	24	Silty Fine SAND, Light Tan, Moist to Saturated, Very Loose to Loose, (SM+SP)		10
	5	SS	24	24		15	9
10	6	SS	24	24			3
						10	
15	7	SS	18	18			4
						5	
20	8	SS	18	18	Silty Fine to Coarse SAND, Gray, Wet to Saturated, Very Loose to Medium Dense, (SP) [Clay Seams at 34 Feet, Black Staining at 40 Feet]		7
						0	
25	9	SS	18	18			5
						-5	
30	10	SS	18	18			5

CONTINUED ON NEXT PAGE.

THE STRATIFICATION LINES REPRESENT THE APPROXIMATE BOUNDARY LINES BETWEEN SOIL TYPES IN-SITU THE TRANSITION MAY BE GRADUAL

WL 10.0 FEET WS OR ⓥ	BORING STARTED 04-04-94	TOPSOIL DEPTH: N/A
WL BCR ACR	BORING COMPLETED 04-04-94	CAVE IN DEPTH @ 10.0 FEET
WL	RIG ECS FOREMAN	DRILLING METHOD WASH (WB)

OWNER	JOB #	BORING #	SHEET
UNITED STATES NAVY	N1221	B-3	2 OF 3

PROJECT NAME	ARCHITECT-ENGINEER
BEQ (P-090T)	KROSKIN DESIGN GROUP

SITE LOCATION
MCAS CHERRY POINT, NORTH CAROLINA

CALIBRATED PENETROMETER TONS/FT.^{2} 1 2 3 4 5+

PLASTIC LIMIT % X — WATER CONTENT % ● — LIQUID LIMIT % Δ
10 20 30 40 50+

STANDARD PENETRATION BLOWS/FT. ⊗
10 20 30 40 50+

DEPTH (FT)	SAMPLE NO.	SAMPLE TYPE	SAMPLE DISTANCE (IN)	RECOVERY (IN)	DESCRIPTION OF MATERIAL	ELEVATION (FT)
					SURFACE ELEVATION 24.00	
30						
35	11	SS	18	0		10
40	12	SS	18	18		15
45	13	SS	18	18	Silty Fine to Medium SAND, With Marine Shell Fragments, Gray, Wet, Medium Dense to Very Dense, (SP)	20
50	14	SS	18	18		25
55	15	SS	18	18		30
60	16	SS	18	18	Silty Fine SAND, Grayish Green, Wet, Medium Dense, (SM)	35

⊗17 ⊗16 ⊗61 ⊗65 ⊗17 ⊗26

CONTINUED ON NEXT PAGE.

THE STRATIFICATION LINES REPRESENT THE APPROXIMATE BOUNDARY LINES BETWEEN SOIL TYPES IN-SITU THE TRANSITION MAY BE GRADUAL

WL 10.0 FEET WS OR WD	BORING STARTED 04-04-94	TOPSOIL DEPTH: N/A
WL BCR ACR	BORING COMPLETED 04-04-94	CAVE IN DEPTH @ 10.0 FEET
WL	RIG ECS FOREMAN	DRILLING METHOD WASH (WB)

OWNER	JOB #	BORING #	SHEET
UNITED STATES NAVY	N1221	B-3	3 OF 3

PROJECT NAME	ARCHITECT-ENGINEER
BEQ (P-090T)	KROSKIN DESIGN GROUP

SITE LOCATION
MCAS CHERRY POINT, NORTH CAROLINA

CALIBRATED PENETROMETER TONS/FT.^{2} (1, 2, 3, 4, 5+)

PLASTIC LIMIT % (X) — WATER CONTENT % — LIQUID LIMIT % (Δ) (10, 20, 30, 40, 50+)

STANDARD PENETRATION BLOWS/FT. (⊗) (10, 20, 30, 40, 50+)

DEPTH (FT)	SAMPLE NO.	SAMPLE TYPE	SAMPLE DISTANCE (IN)	RECOVERY (IN)	DESCRIPTION OF MATERIAL	ELEVATION (FT)
					SURFACE ELEVATION 24.00	
60						
	17	SS	18	18	Fine to Medium SAND, With Marine Shell Fragments, Tannish Gray, Wet, Dense, (SP-SM)	40
65						
	18	SS	18	18		45
70					END OF BORING @ 70.0'	
75						50
80						55
85						60
90						65

⊗ 53
⊗ 57

THE STRATIFICATION LINES REPRESENT THE APPROXIMATE BOUNDARY LINES BETWEEN SOIL TYPES IN-SITU THE TRANSITION MAY BE GRADUAL

WL 10.0 FEET WS OR (WD)	BORING STARTED 04-04-94	TOPSOIL DEPTH: N/A
WL BCR ACR	BORING COMPLETED 04-04-94	CAVE IN DEPTH @ 10.0 FEET
WL	RIG ECS FOREMAN	DRILLING METHOD WASH (WB)

OWNER	JOB #	BORING #	SHEET
UNITED STATES NAVY	N1221	B-4	1 OF 3
PROJECT NAME	ARCHITECT-ENGINEER		
BEQ (P-090T)	KROSKIN DESIGN GROUP		

SITE LOCATION
MCAS CHERRY POINT, NORTH CAROLINA

CALIBRATED PENETROMETER TONS/FT.^{2} (1 2 3 4 5+)
PLASTIC LIMIT % (X) — WATER CONTENT % — LIQUID LIMIT % (Δ)
STANDARD PENETRATION BLOWS/FT. (⊗) (10 20 30 40 50+)

DEPTH (FT)	SAMPLE NO.	SAMPLE TYPE	SAMPLE DISTANCE (IN)	RECOVERY (IN)	DESCRIPTION OF MATERIAL	ELEVATION (FT)	STANDARD PENETRATION BLOWS/FT.
					SURFACE ELEVATION 24.00		
0	1	SS	24	24	Silty and Clayey SAND, Brownish Gray, Moist, Loose, (FILL)		5
	2	SS	24	24	Silty CLAY, With Sand, Orange and Gray Mottled, Moist, Medium Stiff, (CL)	20	8
5	3	SS	24	24	Silty Fine SAND, Trace Clay Lenses, Grayish and Tannish White, Moist to Wet, Loose to Medium Dense, (SP-SM)		18
	4	SS	24	24			17
	5	SS	24	24		15	14
10	6	SS	24	24			9
					Silty Fine to Medium SAND, Orange and Gray, Wet to Saturated, Very Loose to Medium Dense, (SP-SM)	10	
15	7	SS	18	18			8
						5	
20	8	SS	18	18			4
						0	
25	9	SS	18	18	Silty Fine to Medium SAND, Trace Clay Lenses, Gray, Wet to Saturated, Medium Dense, (SP)		12
	10	SS	18	18		-5	11
30							

CONTINUED ON NEXT PAGE.

THE STRATIFICATION LINES REPRESENT THE APPROXIMATE BOUNDARY LINES BETWEEN SOIL TYPES IN-SITU THE TRANSITION MAY BE GRADUAL.

WL 10.0 FEET WS DR (D)	BORING STARTED 04-05-94	TOPSOIL DEPTH: N/A
WL BCR ACR	BORING COMPLETED 04-05-94	CAVE IN DEPTH @
WL	RIG ECS FOREMAN	DRILLING METHOD WASH (WB)

OWNER	JOB #	BORING #	SHEET
UNITED STATES NAVY	N1221	B-4	2 OF 3
PROJECT NAME	ARCHITECT-ENGINEER		
BEQ (P-090T)	KROSKIN DESIGN GROUP		

SITE LOCATION
MCAS CHERRY POINT, NORTH CAROLINA

CALIBRATED PENETROMETER TONS/FT.^{2} (1 2 3 4 5+)
PLASTIC LIMIT % X — WATER CONTENT % ● — LIQUID LIMIT % Δ (10 20 30 40 50+)
STANDARD PENETRATION BLOWS/FT. ⊗ (10 20 30 40 50+)

DEPTH (FT)	SAMPLE NO.	SAMPLE TYPE	SAMPLE DISTANCE (IN)	RECOVERY (IN)	DESCRIPTION OF MATERIAL	ELEVATION (FT)	STANDARD PENETRATION BLOWS/FT.
					SURFACE ELEVATION 24.00		
30							
	11	SS	18	18		-10	33
35							
	12	SS	18	18		-15	22
40							
	13	SS	18	18		-20	23
45							
					Silty Fine to Medium SAND, With Marine Shell Fragments, Gray and Tan, Moist to Wet, Medium Dense to Very Dense, (SP-SM)		
	14	SS	18	18		-25	50
50							
	15	SS	18	18		-30	29
55							
	16	SS	18	18		-35	23
60							

CONTINUED ON NEXT PAGE.

THE STRATIFICATION LINES REPRESENT THE APPROXIMATE BOUNDARY LINES BETWEEN SOIL TYPES IN-SITU THE TRANSITION MAY BE GRADUAL

WL 10.0 FEET WS OR WD	BORING STARTED 04-05-94	TOPSOIL DEPTH: N/A
WL BCR ACR	BORING COMPLETED 04-05-94	CAVE IN DEPTH @
WL	RIG ECS FOREMAN	DRILLING METHOD WASH (WB)

OWNER	JOB #	BORING #	SHEET
UNITED STATES NAVY	N1221	B-4	3 OF 3

PROJECT NAME	ARCHITECT-ENGINEER
BEQ (P-090T)	KROSKIN DESIGN GROUP

SITE LOCATION
MCAS CHERRY POINT, NORTH CAROLINA

CALIBRATED PENETROMETER TONS/FT.^{2} 1 2 3 4 5+

PLASTIC LIMIT % X — WATER CONTENT % ● — LIQUID LIMIT % Δ

10 20 30 40 50+

STANDARD PENETRATION BLOWS/FT. ⊗ 10 20 30 40 50+

DEPTH (FT)	SAMPLE NO.	SAMPLE TYPE	SAMPLE DISTANCE (IN)	RECOVERY (IN)	DESCRIPTION OF MATERIAL	ELEVATION (FT)
					SURFACE ELEVATION 24.00	
60						
	17	SS	18	18		40
65						
	18	SS	18	18		45
70					END OF BORING @ 70.0'	
75						50
80						55
85						60
90						65

⊗56

⊗44

THE STRATIFICATION LINES REPRESENT THE APPROXIMATE BOUNDARY LINES BETWEEN SOIL TYPES IN-SITU THE TRANSITION MAY BE GRADUAL.

WL 10.0 FEET WS OR ⓌD	BORING STARTED 04-05-94	TOPSOIL DEPTH: N/A
WL BCR ACR	BORING COMPLETED 04-05-94	CAVE IN DEPTH @
WL	RIG ECS FOREMAN	DRILLING METHOD WASH (WB)

OWNER	JOB #	BORING #	SHEET
UNITED STATES NAVY	N1221	B-5	1 OF 3
PROJECT NAME	ARCHITECT-ENGINEER		
BEQ (P-090T)	KROSKIN DESIGN GROUP		

SITE LOCATION
MCAS CHERRY POINT, NORTH CAROLINA

CALIBRATED PENETROMETER TONS/FT.^{2} (1, 2, 3, 4, 5+)

PLASTIC LIMIT % (X) — WATER CONTENT % — LIQUID LIMIT % (Δ) (10, 20, 30, 40, 50+)

STANDARD PENETRATION BLOWS/FT. (⊗) (10, 20, 30, 40, 50+)

SURFACE ELEVATION 24.00

DEPTH (FT)	SAMPLE NO.	SAMPLE TYPE	SAMPLE DISTANCE (IN)	RECOVERY (IN)	DESCRIPTION OF MATERIAL	ELEVATION (FT)	STANDARD PENETRATION BLOWS/FT.
0	1	SS	24	24	Silty SAND, With Clay, Trace Organic Fragments, Dark Gray, Moist, Loose, (FILL)	20	9
	2	SS	24	24	Silty Fine to Medium SAND, Trace Interbedded Clay Lenses, Orange and Tan, Moist, Loose to Medium Dense, (SM)		9
5	3	SS	24	24			9
	4	SS	24	24			15
	5	SS	24	24		15	10
10	6	SS	24	24			6
						10	
15	7	SS	18	18			6
						5	
20	8	SS	18	18			7
						0	
25	9	SS	18	18			5
					Silty Fine to Coarse SAND, Light Gray, Moist to Saturated, Medium Dense, (SP-SM)	−5	
30	10	SS	18	18			20

CONTINUED ON NEXT PAGE.

THE STRATIFICATION LINES REPRESENT THE APPROXIMATE BOUNDARY LINES BETWEEN SOIL TYPES IN-SITU THE TRANSITION MAY BE GRADUAL

WL 10.0 FEET WS OR (WD)	BORING STARTED 04-05-94	TOPSOIL DEPTH: N/A
WL BCR ACR	BORING COMPLETED 04-05-94	CAVE IN DEPTH @
WL	RIG ECS FOREMAN	DRILLING METHOD WASH (WB)

OWNER	JOB #	BORING #	SHEET
UNITED STATES NAVY	N1221	B-5	2 OF 3

PROJECT NAME	ARCHITECT-ENGINEER
BEQ (P-090T)	KROSKIN DESIGN GROUP

SITE LOCATION
MCAS CHERRY POINT, NORTH CAROLINA

CALIBRATED PENETROMETER TONS/FT.^{2} (1, 2, 3, 4, 5+)

PLASTIC LIMIT % (X) — WATER CONTENT % — LIQUID LIMIT % (Δ) (10, 20, 30, 40, 50+)

STANDARD PENETRATION BLOWS/FT. (⊗) (10, 20, 30, 40, 50+)

SURFACE ELEVATION 24.00

DEPTH (FT)	SAMPLE NO.	SAMPLE TYPE	SAMPLE DISTANCE (IN)	RECOVERY (IN)	DESCRIPTION OF MATERIAL	ELEVATION (FT)	STANDARD PENETRATION BLOWS/FT.
30							
	11	SS	18	18			19
35						-10	
	12	SS	18	18	Silty Fine to Medium SAND, With Marine Shell Fragments, Gray, Wet to Saturated, Dense, (SP)	-15	44
40							
	13	SS	18	18		-20	53
45							
						-25	
50	14	SS	18	18			45
						-30	
	15	SS	18	18			74
55							
					Silty Fine SAND, Trace Clay, Grayish Green, Moist, Medium Dense, (SM)	-35	
	16	SS	18	18			12
60							

CONTINUED ON NEXT PAGE.

THE STRATIFICATION LINES REPRESENT THE APPROXIMATE BOUNDARY LINES BETWEEN SOIL TYPES IN-SITU THE TRANSITION MAY BE GRADUAL.

WL 10.0 FEET WS OR WD	BORING STARTED 04-05-94	TOPSOIL DEPTH: N/A
WL BCR ACR	BORING COMPLETED 04-05-94	CAVE IN DEPTH @
WL	RIG ECS FOREMAN	DRILLING METHOD WASH (WB)

OWNER	JOB #	BORING #	SHEET
UNITED STATES NAVY	N1221	B-5	3 OF 3

ECS LTD

PROJECT NAME	ARCHITECT-ENGINEER
BEQ (P-090T)	KROSKIN DESIGN GROUP

SITE LOCATION
MCAS CHERRY POINT, NORTH CAROLINA

SURFACE ELEVATION 24.00

DEPTH (FT)	SAMPLE NO.	SAMPLE TYPE	SAMPLE DISTANCE (IN)	RECOVERY (IN)	DESCRIPTION OF MATERIAL	ELEVATION (FT)
60						
					Silty Fine to Medium SAND, With Marine Shell Fragments, Gray, Wet, Dense, (SP-SM)	
	17	SS	18	18		-40
65						
	18	SS	18	18		-45
70					END OF BORING @ 70.0'	
75						-50
80						-55
85						-60
90						-65

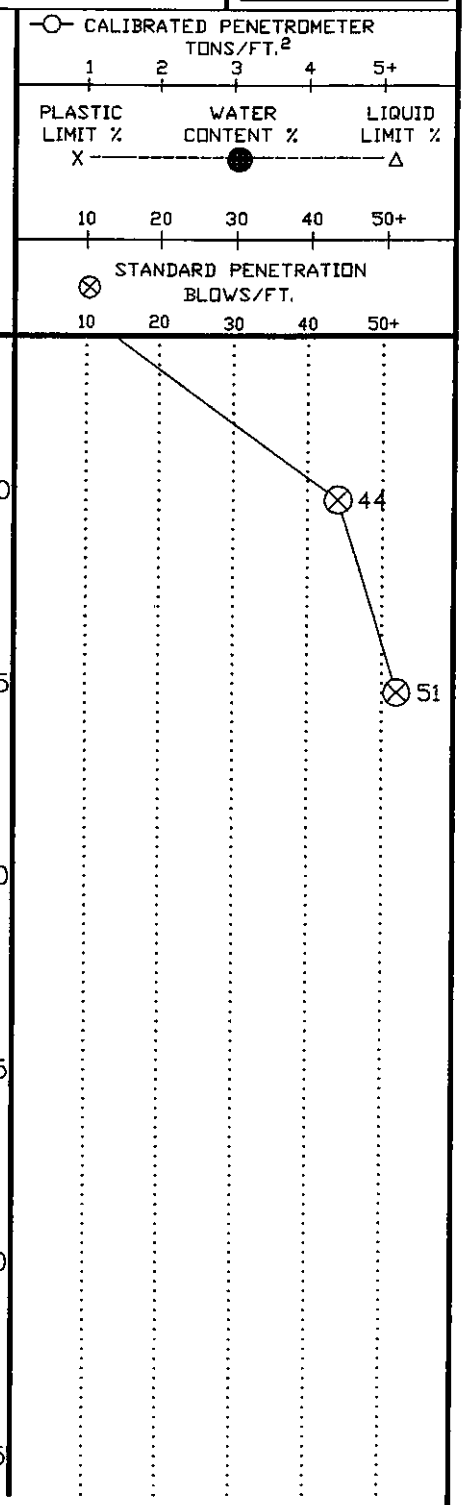

THE STRATIFICATION LINES REPRESENT THE APPROXIMATE BOUNDARY LINES BETWEEN SOIL TYPES IN-SITU THE TRANSITION MAY BE GRADUAL

WL 10.0 FEET WS OR WD	BORING STARTED 04-05-94	TOPSOIL DEPTH: N/A
WL BCR ACR	BORING COMPLETED 04-05-94	CAVE IN DEPTH @
WL	RIG ECS FOREMAN	DRILLING METHOD WASH (WB)

OWNER	JOB #	BORING #	SHEET
UNITED STATES NAVY	N1221	B-6	1 OF 3

PROJECT NAME	ARCHITECT-ENGINEER
BEQ (P-090T)	KROSKIN DESIGN GROUP

SITE LOCATION
MCAS CHERRY POINT, NORTH CAROLINA

CALIBRATED PENETROMETER TONS/FT.^{2} (1 2 3 4 5+)

PLASTIC LIMIT % (X) — WATER CONTENT % — LIQUID LIMIT % (Δ)

STANDARD PENETRATION BLOWS/FT. (10 20 30 40 50+)

DEPTH (FT)	SAMPLE NO.	SAMPLE TYPE	SAMPLE DISTANCE (IN)	RECOVERY (IN)	DESCRIPTION OF MATERIAL	ELEVATION (FT)	STANDARD PENETRATION BLOWS/FT.
					SURFACE ELEVATION 24.00		
0	1	SS	24	24	Silty Fine SAND, With Gravel Fragments, Grayish Brown, Dry, Loose, (FILL)	20	7
	2	SS	24	24	Silty Fine to Medium SAND, Orange and Tan, Moist to Saturated, Medium Dense, (SM+SP)		13
5	3	SS	24	24			15
	4	SS	24	24			20
	5	SS	24	24		15	17
10	6	SS	24	24			11
						10	
15	7	SS	18	18			3
						5	
20	8	SS	18	18			6
						0	
25	9	SS	18	18			11
					Silty Fine SAND, With Clay and Marine Shell Fragments, Greenish Gray, Moist, Medium Dense, (SM)	−5	
30	10	SS	18	18			15

CONTINUED ON NEXT PAGE.

THE STRATIFICATION LINES REPRESENT THE APPROXIMATE BOUNDARY LINES BETWEEN SOIL TYPES IN-SITU THE TRANSITION MAY BE GRADUAL

WL 10.0 FEET WS DR (D)	BORING STARTED 04-04-94	TOPSOIL DEPTH: N/A
WL BCR ACR	BORING COMPLETED 04-04-94	CAVE IN DEPTH @
WL	RIG ECS FOREMAN	DRILLING METHOD WASH

OWNER	JOB #	BORING #	SHEET
UNITED STATES NAVY	N1221	B-6	2 OF 3
PROJECT NAME	ARCHITECT-ENGINEER		
BEQ (P-090T)	KROSKIN DESIGN GROUP		

SITE LOCATION
MCAS CHERRY POINT, NORTH CAROLINA

CALIBRATED PENETROMETER TONS/FT.^{2} (1 2 3 4 5+)
PLASTIC LIMIT % X — WATER CONTENT % ● — LIQUID LIMIT % Δ (10 20 30 40 50+)
STANDARD PENETRATION BLOWS/FT. ⊗ (10 20 30 40 50+)

DEPTH (FT)	SAMPLE NO.	SAMPLE TYPE	SAMPLE DISTANCE (IN)	RECOVERY (IN)	DESCRIPTION OF MATERIAL	ELEVATION (FT)	STANDARD PENETRATION BLOWS/FT.
					SURFACE ELEVATION 24.00		
35	11	SS	18	18	Silty Fine to Coarse SAND, Gray, Saturated, Medium Dense, (SP) [Clay Seams at 40 Feet]	-10	30
40	12	SS	18	18		-15	36
45	13	SS	18	18	Silty Fine to Medium SAND, With Marine Shell Fragments, Gray, Saturated, Dense to Very Dense, (SP-SM)	-20	66
50	14	SS	18	18		-25	58
55	15	SS	18	18		-30	73
60	16	SS	18	18		-35	34

CONTINUED ON NEXT PAGE.

THE STRATIFICATION LINES REPRESENT THE APPROXIMATE BOUNDARY LINES BETWEEN SOIL TYPES IN-SITU THE TRANSITION MAY BE GRADUAL

WL 10.0 FEET WS OR WD	BORING STARTED 04-04-94	TOPSOIL DEPTH: N/A
WL BCR ACR	BORING COMPLETED 04-04-94	CAVE IN DEPTH @
WL	RIG ECS FOREMAN	DRILLING METHOD WASH

OWNER	JOB #	BORING #	SHEET
UNITED STATES NAVY	N1221	B-6	3 OF 3
PROJECT NAME	**ARCHITECT-ENGINEER**		
BEQ (P-090T)	KROSKIN DESIGN GROUP		

SITE LOCATION: MCAS CHERRY POINT, NORTH CAROLINA

CALIBRATED PENETROMETER TONS/FT.^{2}: 1 2 3 4 5+

PLASTIC LIMIT % X — WATER CONTENT % ● — LIQUID LIMIT % Δ: 10 20 30 40 50+

STANDARD PENETRATION BLOWS/FT. ⊗: 10 20 30 40 50+

SURFACE ELEVATION 24.00

DEPTH (FT)	SAMPLE NO.	SAMPLE TYPE	SAMPLE DISTANCE (IN)	RECOVERY (IN)	DESCRIPTION OF MATERIAL	ELEVATION (FT)	STANDARD PENETRATION BLOWS/FT.
60							
	17	SS	18	18		40	⊗34
65							
	18	SS	18	18		45	⊗36
70					END OF BORING @ 70.0'		
75						50	
80						55	
85						60	
90						65	

THE STRATIFICATION LINES REPRESENT THE APPROXIMATE BOUNDARY LINES BETWEEN SOIL TYPES IN-SITU THE TRANSITION MAY BE GRADUAL.

WL 10.0 FEET WS OR (WD)	BORING STARTED 04-04-94	TOPSOIL DEPTH: N/A
WL BCR ACR	BORING COMPLETED 04-04-94	CAVE IN DEPTH @
WL	RIG ECS FOREMAN	DRILLING METHOD WASH

OWNER	JOB #	BORING #	SHEET
UNITED STATES NAVY	N1221	B-7	1 OF 3
PROJECT NAME	ARCHITECT-ENGINEER		
BEQ (P-090T)	KROSKIN DESIGN GROUP		

SITE LOCATION
MCAS CHERRY POINT, NORTH CAROLINA

CALIBRATED PENETROMETER TONS/FT.^{2} (1 2 3 4 5+)
PLASTIC LIMIT % (X) — WATER CONTENT % — LIQUID LIMIT % (Δ) (10 20 30 40 50+)
STANDARD PENETRATION BLOWS/FT. (⊗) (10 20 30 40 50+)

DEPTH (FT)	SAMPLE NO.	SAMPLE TYPE	SAMPLE DISTANCE (IN)	RECOVERY (IN)	DESCRIPTION OF MATERIAL	ELEVATION (FT)	STANDARD PENETRATION BLOWS/FT.
					SURFACE ELEVATION 25.00		
0	1	SS	24	24	Silty SAND, Trace Organic Fragments, Grayish Brown, Moist, Very Loose, (FILL)		5
	2	SS	24	24	Silty CLAY, With Sand, Orange and Gray Mottled, Moist, Soft, (SC-CL)		5
5	3	SS	24	24		20	8
	4	SS	24	24	Silty Fine SAND, Orange, Moist, Loose, (SM)		7
	5	SS	24	24			5
10	6	SS	24	24	Silty Fine to Medium SAND, Trace Clay Lenses, Gray, Very Loose to Medium Dense, (SP+SM) [Dark Grayish Black at 38 Feet]	15	6
15	7	SS	18	18		10	2
20	8	SS	18	18		5	3
25	9	SS	18	18		0	7
30	10	SS	18	18			26

CONTINUED ON NEXT PAGE.

THE STRATIFICATION LINES REPRESENT THE APPROXIMATE BOUNDARY LINES BETWEEN SOIL TYPES IN-SITU THE TRANSITION MAY BE GRADUAL

WL 10.0 FEET WS OR (WD)	BORING STARTED 04-04-94	TOPSOIL DEPTH: 2"
WL BCR ACR	BORING COMPLETED 04-04-94	CAVE IN DEPTH @ 12 FEET
WL	RIG ECS FOREMAN	DRILLING METHOD WASH (WB)

OWNER	JOB #	BORING #	SHEET
UNITED STATES NAVY	N1221	B-7	2 OF 3

PROJECT NAME	ARCHITECT-ENGINEER
BEQ (P-090T)	KROSKIN DESIGN GROUP

SITE LOCATION
MCAS CHERRY POINT, NORTH CAROLINA

CALIBRATED PENETROMETER TONS/FT.^{2} 1 2 3 4 5+

PLASTIC LIMIT % X — WATER CONTENT % ● — LIQUID LIMIT % Δ
10 20 30 40 50+

STANDARD PENETRATION BLOWS/FT. ⊗
10 20 30 40 50+

DEPTH (FT)	SAMPLE NO.	SAMPLE TYPE	SAMPLE DISTANCE (IN)	RECOVERY (IN)	DESCRIPTION OF MATERIAL	ELEVATION (FT)
					SURFACE ELEVATION 25.00	
30						
35	11	SS	18	18		-10
	12	SS	18	18		
40					Silty Fine to Medium SAND, With Marine Shell Fragments, Gray, Wet to Saturated, Loose to Dense, (SP) [Clay Seam at 54 Feet]	-15
45	13	SS	18	18		-20
50	14	SS	18	18		-25
55	15	SS	18	18		-30
					Silty Fine SAND, Grayish Green, Moist, Medium Dense, (SM)	
60	16	SS	18	18		

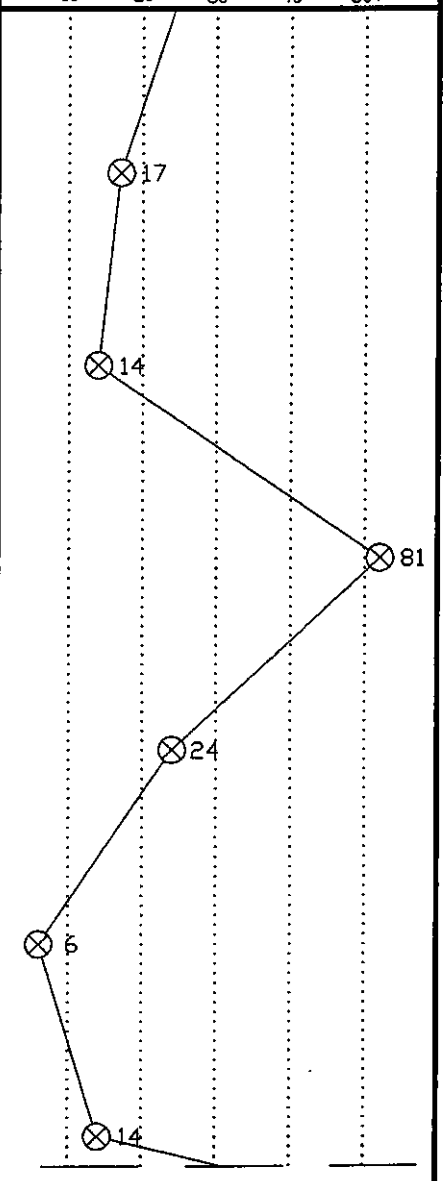

CONTINUED ON NEXT PAGE.

THE STRATIFICATION LINES REPRESENT THE APPROXIMATE BOUNDARY LINES BETWEEN SOIL TYPES IN-SITU THE TRANSITION MAY BE GRADUAL

WL 10.0 FEET WS OR WD	BORING STARTED 04-04-94	TOPSOIL DEPTH: 2"
WL BCR ACR	BORING COMPLETED 04-04-94	CAVE IN DEPTH @ 12 FEET
WL	RIG ECS FOREMAN	DRILLING METHOD WASH (WB)

OWNER	JOB #	BORING #	SHEET
UNITED STATES NAVY	N1221	B-7	3 OF 3

PROJECT NAME	ARCHITECT-ENGINEER
BEQ (P-090T)	KROSKIN DESIGN GROUP

SITE LOCATION
MCAS CHERRY POINT, NORTH CAROLINA

CALIBRATED PENETROMETER TONS/FT.^{2} 1 2 3 4 5+

PLASTIC LIMIT % X — WATER CONTENT % ● — LIQUID LIMIT % Δ

10 20 30 40 50+

STANDARD PENETRATION BLOWS/FT. ⊗

10 20 30 40 50+

DEPTH (FT)	SAMPLE NO.	SAMPLE TYPE	SAMPLE DISTANCE (IN)	RECOVERY (IN)	DESCRIPTION OF MATERIAL	ELEVATION (FT)
					SURFACE ELEVATION 25.00	
60						
	17	SS	18	18	Silty Fine to Medium SAND, With Marine Shell Fragments, Gray, Wet to Saturated, Dense, (SP-SM)	40
65						
	18	SS	18	18		
70					END OF BORING @ 70.0'	45
75						50
80						55
85						60
90						

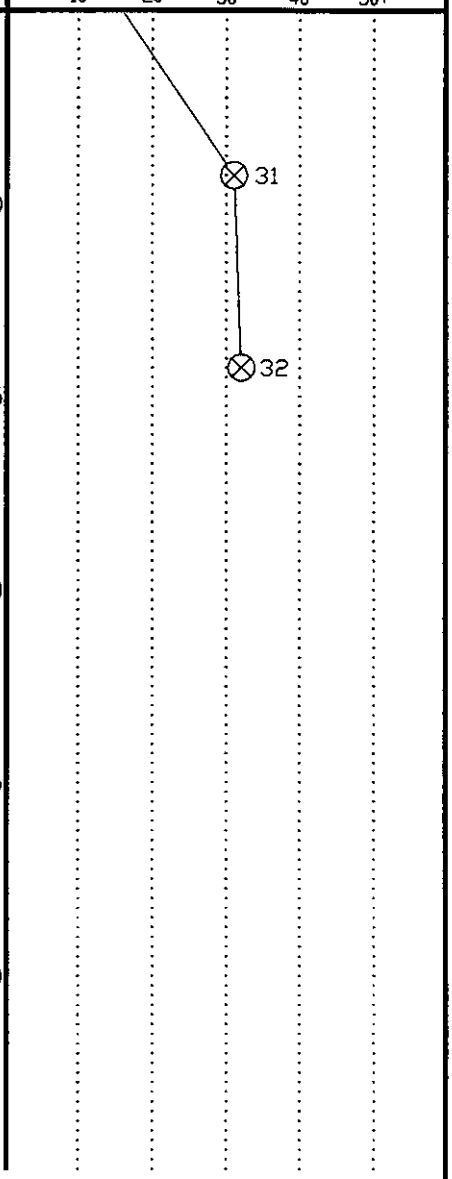

THE STRATIFICATION LINES REPRESENT THE APPROXIMATE BOUNDARY LINES BETWEEN SOIL TYPES IN-SITU THE TRANSITION MAY BE GRADUAL

WL 10.0 FEET WS OR (WD)	BORING STARTED 04-04-94	TOPSOIL DEPTH: 2"
WL BCR ACR	BORING COMPLETED 04-04-94	CAVE IN DEPTH @ 12 FEET
WL	RIG ECS FOREMAN	DRILLING METHOD WASH (WB)

OWNER	JOB #	BORING #	SHEET
UNITED STATES NAVY	N1221	B-8	1 OF 3
PROJECT NAME	ARCHITECT-ENGINEER		
BEQ (P-090T)	KROSKIN DESIGN GROUP		

SITE LOCATION: MCAS CHERRY POINT, NORTH CAROLINA

CALIBRATED PENETROMETER TONS/FT.^{2} (1, 2, 3, 4, 5+)

PLASTIC LIMIT % (X) — WATER CONTENT % — LIQUID LIMIT % (Δ)

STANDARD PENETRATION BLOWS/FT. (10, 20, 30, 40, 50+)

SURFACE ELEVATION 25.00

DEPTH (FT)	SAMPLE NO.	SAMPLE TYPE	SAMPLE DISTANCE (IN)	RECOVERY (IN)	DESCRIPTION OF MATERIAL	ELEVATION (FT)	STANDARD PENETRATION BLOWS/FT.
0	1	SS	24	24	Silty and Clayey SAND, Trace Organic Fragments, Dark Gray and Tan, Moist to Wet, Loose to Medium Dense, (FILL)	25	6
	2	SS	24	24			12
5	3	SS	24	24	Silty CLAY, Trace Sand Seams, Orange and Gray Mottled, Moist, Medium Stiff, (CL)	20	6
	4	SS	24	24			11
	5	SS	24	24			19
10	6	SS	24	24	Silty Fine to Medium SAND, Grayish Tan, Moist to Saturated, Loose to Medium Dense, (SM)	15	17
15	7	SS	18	18		10	7
20	8	SS	18	18		5	7
25	9	SS	18	18		0	9
30	10	SS	18	18			14

CONTINUED ON NEXT PAGE.

THE STRATIFICATION LINES REPRESENT THE APPROXIMATE BOUNDARY LINES BETWEEN SOIL TYPES IN-SITU THE TRANSITION MAY BE GRADUAL

WL 10.0 FEET WS OR (WD)	BORING STARTED 04-04-94	TOPSOIL DEPTH: 3"
WL BCR ACR	BORING COMPLETED 04-04-94	CAVE IN DEPTH @
WL	RIG ECS FOREMAN	DRILLING METHOD WASH

OWNER	JOB #	BORING #	SHEET
UNITED STATES NAVY	N1221	B-8	2 OF 3
PROJECT NAME	ARCHITECT-ENGINEER		
BEQ (P-090T)	KROSKIN DESIGN GROUP		

SITE LOCATION
MCAS CHERRY POINT, NORTH CAROLINA

CALIBRATED PENETROMETER TONS/FT.^{2} (1, 2, 3, 4, 5+)

PLASTIC LIMIT % (X) — WATER CONTENT % — LIQUID LIMIT % (Δ) (10, 20, 30, 40, 50+)

STANDARD PENETRATION BLOWS/FT. (⊗) (10, 20, 30, 40, 50+)

DEPTH (FT)	SAMPLE NO.	SAMPLE TYPE	SAMPLE DISTANCE (IN)	RECOVERY (IN)	DESCRIPTION OF MATERIAL	ELEVATION (FT)
					SURFACE ELEVATION 25.00	
30						
					Silty Fine to Medium SAND, Trace Clay Lenses, Gray, Wet to Saturated, Medium Dense, (SP+SM) [Dark Gray With Trace Gravel at 49 Feet]	
	11	SS	18	18		
35						-10
	12	SS	18	18		
40						-15
	13	SS	18	18		
45						-20
	14	SS	18	18	Silty CLAY, Dark Gray, Wet, Soft, (CL)	
50						-25
					Clayey Fine to Medium SAND, With Marine Shell Fragments, Greenish Gray, Moist, Medium Dense, (SC)	
	15	SS	18	18		
55						-30
					Silty Fine SAND, Trace Clay, Greenish Gray, Moist, Medium Dense, (SM)	
	16	SS	18	18		
60						

CONTINUED ON NEXT PAGE.

THE STRATIFICATION LINES REPRESENT THE APPROXIMATE BOUNDARY LINES BETWEEN SOIL TYPES IN-SITU THE TRANSITION MAY BE GRADUAL.

WL 10.0 FEET WS OR WD	BORING STARTED 04-04-94	TOPSOIL DEPTH: 3"
WL BCR ACR	BORING COMPLETED 04-04-94	CAVE IN DEPTH @
WL	RIG ECS FOREMAN	DRILLING METHOD WASH

OWNER	JOB #	BORING #	SHEET
UNITED STATES NAVY	N1221	B-8	3 OF 3
PROJECT NAME	ARCHITECT-ENGINEER		
BEQ (P-090T)	KROSKIN DESIGN GROUP		

SITE LOCATION
MCAS CHERRY POINT, NORTH CAROLINA

CALIBRATED PENETROMETER TONS/FT.^{2} (1, 2, 3, 4, 5+)

PLASTIC LIMIT % X — WATER CONTENT % ● — LIQUID LIMIT % Δ (10, 20, 30, 40, 50+)

STANDARD PENETRATION BLOWS/FT. ⊗ (10, 20, 30, 40, 50+)

SURFACE ELEVATION 25.00

DEPTH (FT)	SAMPLE NO.	SAMPLE TYPE	SAMPLE DISTANCE (IN)	RECOVERY (IN)	DESCRIPTION OF MATERIAL	ELEVATION (FT)
60						
65	17	SS	18	18	Silty Fine to Medium SAND, With Marine Shell Fragments, Light Gray, Moist, Dense, (SP-SM)	-40
70	18	SS	18	18		-45
75						-50
80						-55
85						-60
90						

⊗43 ⊗47

END OF BORING @ 70.0'

THE STRATIFICATION LINES REPRESENT THE APPROXIMATE BOUNDARY LINES BETWEEN SOIL TYPES IN-SITU THE TRANSITION MAY BE GRADUAL

WL 10.0 FEET WS OR WD	BORING STARTED 04-04-94	TOPSOIL DEPTH: 3"
WL BCR ACR	BORING COMPLETED 04-04-94	CAVE IN DEPTH @
WL	RIG ECS FOREMAN	DRILLING METHOD WASH

OWNER	JOB #	BORING #	SHEET
UNITED STATES NAVY	N1221	B-9	1 OF 3
PROJECT NAME	ARCHITECT-ENGINEER		
BEQ (P-090T)	KROSKIN DESIGN GROUP		

SITE LOCATION
MCAS CHERRY POINT, NORTH CAROLINA

CALIBRATED PENETROMETER TONS/FT.^{2} 1 2 3 4 5+

PLASTIC LIMIT % X — WATER CONTENT % ● — LIQUID LIMIT % Δ

10 20 30 40 50+

STANDARD PENETRATION BLOWS/FT. ⊗ 10 20 30 40 50+

DEPTH (FT)	SAMPLE NO.	SAMPLE TYPE	SAMPLE DISTANCE (IN)	RECOVERY (IN)	DESCRIPTION OF MATERIAL	ELEVATION (FT)
					SURFACE ELEVATION 24.00	
0	1	SS	24	24	Silty CLAY, Grayish Brown, Moist, Medium Stiff, (CL) [Possible Fill]	20
	2	SS	24	24	Silty CLAY, Trace Sand, Orange and Gray Mottled, Moist, Very Stiff, (CL)	
5	3	SS	24	24	Silty Fine to Medium SAND, Orange and Tan, Moist, Loose to Medium Dense, (SP-SM) [Gray Clay Seam at 10 Feet]	15
	4	SS	24	24		
	5	SS	24	24		10
10	6	SS	24	24		
						5
15	7	SS	18	18		
						0
20	8	SS	18	18		
						-5
25	9	SS	18	18		
	10	SS	18	18		
30						

STANDARD PENETRATION BLOWS/FT.: 8, 17, 15, 14, 1, 7, 6, 8, 13, 12

CONTINUED ON NEXT PAGE.

THE STRATIFICATION LINES REPRESENT THE APPROXIMATE BOUNDARY LINES BETWEEN SOIL TYPES IN-SITU THE TRANSITION MAY BE GRADUAL

WL 10.0 FEET WS OR WD	BORING STARTED 04-01-94	TOPSOIL DEPTH: 4"
WL BCR ACR	BORING COMPLETED 04-01-94	CAVE IN DEPTH @
WL	RIG ECS FOREMAN	DRILLING METHOD WASH (WB)

OWNER	JOB #	BORING #	SHEET
UNITED STATES NAVY	N1221	B-9	2 OF 3
PROJECT NAME	ARCHITECT-ENGINEER		
BEQ (P-090T)	KROSKIN DESIGN GROUP		

SITE LOCATION
MCAS CHERRY POINT, NORTH CAROLINA

CALIBRATED PENETROMETER TONS/FT.^{2} (1, 2, 3, 4, 5+)

PLASTIC LIMIT % X — WATER CONTENT % ● — LIQUID LIMIT % Δ (10, 20, 30, 40, 50+)

STANDARD PENETRATION BLOWS/FT. ⊗ (10, 20, 30, 40, 50+)

SURFACE ELEVATION 24.00

DEPTH (FT)	SAMPLE NO.	SAMPLE TYPE	SAMPLE DISTANCE (IN)	RECOVERY (IN)	DESCRIPTION OF MATERIAL	ELEVATION (FT)	STANDARD PENETRATION BLOWS/FT.
30							
	11	SS	18	18	Silty Fine to Medium SAND, Gray, Moist, Dense, (SP-SM)	-10	41
35							
	12	SS	18	18		-15	32
40							
	13	SS	18	18	Silty CLAY, Trace Sand and Marine Shell Fragments, Medium Gray, Moist, Very Soft to Medium Stiff, (CH)	-20	6
45							
	14	SS	18	18		-25	2
50							
	15	SS	18	18	Silty Fine to Medium SAND, With Marine Shell Fragments, Gray, Moist, Loose, (SP-SM)	-30	8
55							
	16	SS	18	18	Silty Fine SAND, With Clay, Greenish Gray, Moist, Medium Dense, (SM-CL)	-35	12
60							

CONTINUED ON NEXT PAGE.

THE STRATIFICATION LINES REPRESENT THE APPROXIMATE BOUNDARY LINES BETWEEN SOIL TYPES IN-SITU THE TRANSITION MAY BE GRADUAL

WL 10.0 FEET WS OR WD	BORING STARTED 04-01-94	TOPSOIL DEPTH: 4"
WL BCR ACR	BORING COMPLETED 04-01-94	CAVE IN DEPTH @
WL	RIG ECS FOREMAN	DRILLING METHOD WASH (WB)

OWNER	JOB #	BORING #	SHEET
UNITED STATES NAVY	N1221	B-9	3 OF 3

ECS LTD

PROJECT NAME	ARCHITECT-ENGINEER
BEQ (P-090T)	KROSKIN DESIGN GROUP

SITE LOCATION
MCAS CHERRY POINT, NORTH CAROLINA

SURFACE ELEVATION 24.00

DEPTH (FT)	SAMPLE NO.	SAMPLE TYPE	SAMPLE DISTANCE (IN)	RECOVERY (IN)	DESCRIPTION OF MATERIAL	ELEVATION (FT)
60						
	17	SS	18	18		-40
65					Silty Fine to Medium SAND, With Marine Shell Fragments, Grayish Tan, Wet, Medium Dense, (SP-SM)	
	18	SS	18	18		-45
70					END OF BORING @ 70.0'	
75						-50
80						-55
85						-60
90						-65

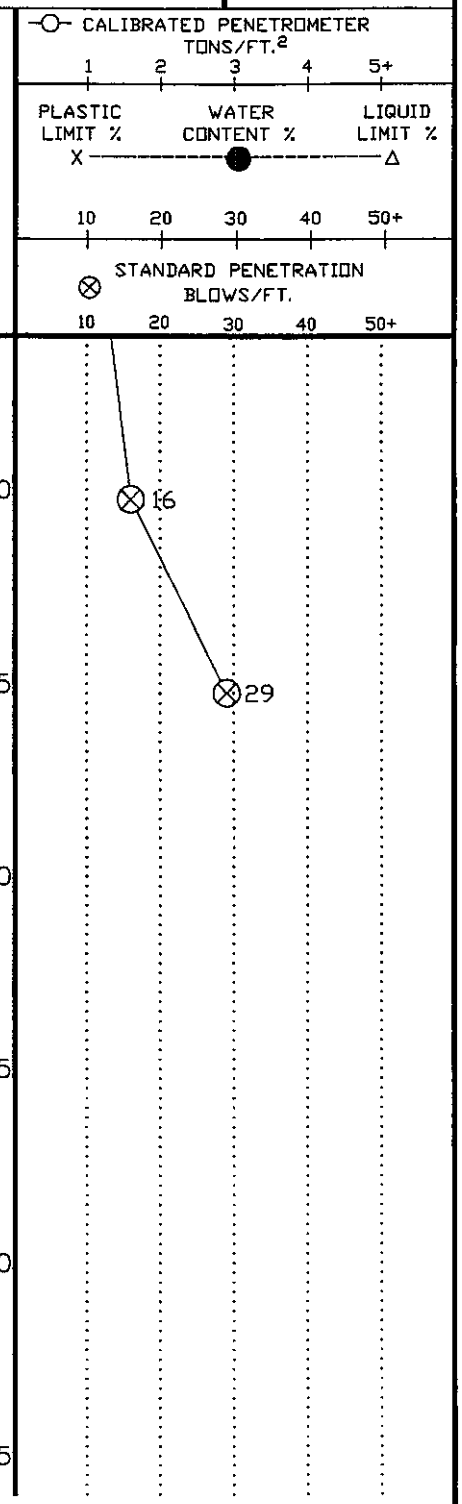

THE STRATIFICATION LINES REPRESENT THE APPROXIMATE BOUNDARY LINES BETWEEN SOIL TYPES IN-SITU THE TRANSITION MAY BE GRADUAL

WL 10.0 FEET WS OR WD	BORING STARTED 04-01-94	TOPSOIL DEPTH: 4"
WL BCR ACR	BORING COMPLETED 04-01-94	CAVE IN DEPTH @
WL	RIG ECS FOREMAN	DRILLING METHOD WASH (WB)

OWNER	JOB #	BORING #	SHEET
UNITED STATES NAVY	N1221	B-10	1 OF 3
PROJECT NAME	ARCHITECT-ENGINEER		
BEQ (P-090T)	KROSKIN DESIGN GROUP		

SITE LOCATION
MCAS CHERRY POINT, NORTH CAROLINA

CALIBRATED PENETROMETER TONS/FT.^{2} (1, 2, 3, 4, 5+)

PLASTIC LIMIT % (X) — WATER CONTENT % — LIQUID LIMIT % (Δ) (10, 20, 30, 40, 50+)

STANDARD PENETRATION BLOWS/FT. (⊗) (10, 20, 30, 40, 50+)

SURFACE ELEVATION 24.00

DEPTH (FT)	SAMPLE NO.	SAMPLE TYPE	SAMPLE DISTANCE (IN)	RECOVERY (IN)	DESCRIPTION OF MATERIAL	ELEVATION (FT)	STANDARD PENETRATION BLOWS/FT.
0	1	SS	24	24	Silty SAND, Trace Clay and Wood Fragments, Grayish Brown, Moist, Loose, (FILL)	20	6
	2	SS	24	24	Sandy CLAY, Orange and Gray Mottled, Moist, Medium Stiff, (CL)		10
5	3	SS	24	24	Silty Fine SAND, Orange and Tan, Moist, Medium Dense, (SP-SM)		17
	4	SS	24	24			3
	5	SS	24	24	Sandy CLAY, With Silt, Gray, Wet to Saturated, Very Soft, (CH)	15	WOH
10	6	SS	24	24			1
15	7	SS	18	18	Silty Fine to Medium SAND, Gray and Tan, Moist, Medium Dense, (SM)	10	18
20	8	SS	18	18		5	9
25	9	SS	18	18		0	9
	10	SS	18	18		-5	10
30							

CONTINUED ON NEXT PAGE.

THE STRATIFICATION LINES REPRESENT THE APPROXIMATE BOUNDARY LINES BETWEEN SOIL TYPES IN-SITU THE TRANSITION MAY BE GRADUAL

WL 8.0 FEET WS OR (WD)	BORING STARTED 03-30-94	TOPSOIL DEPTH: N/A
WL BCR ACR	BORING COMPLETED 03-30-94	CAVE IN DEPTH @
WL	RIG ECS FOREMAN	DRILLING METHOD WASH (WB)

OWNER	JOB #	BORING #	SHEET
UNITED STATES NAVY	N1221	B-10	2 OF 3
PROJECT NAME	ARCHITECT-ENGINEER		
BEQ (P-090T)	KROSKIN DESIGN GROUP		

SITE LOCATION
MCAS CHERRY POINT, NORTH CAROLINA

CALIBRATED PENETROMETER TONS/FT.^{2} (1 2 3 4 5+)
PLASTIC LIMIT % X — WATER CONTENT % ● — LIQUID LIMIT % Δ (10 20 30 40 50+)
STANDARD PENETRATION BLOWS/FT. ⊗ (10 20 30 40 50+)

DEPTH (FT)	SAMPLE NO.	SAMPLE TYPE	SAMPLE DISTANCE (IN)	RECOVERY (IN)	DESCRIPTION OF MATERIAL	ELEVATION (FT)
					SURFACE ELEVATION 24.00	
30						
	11	SS	18	18		-10
35					Silty Fine to Medium SAND, Trace Marine Shell Fragments, Gray, Wet to Saturated, Dense, (SP-SM)	
	12	SS	18	18		-15
40						
	13	SS	18	18		-20
45						
	14	SS	18	18		-25
50						
	15	SS	18	18		-30
55						
	16	SS	18	18	Silty Fine SAND, Trace Clay, Greenish Gray, Moist, Dense, (SM)	-35
60						

Penetrometer values: 7, 39, 53, 57, 16, 33

CONTINUED ON NEXT PAGE.

THE STRATIFICATION LINES REPRESENT THE APPROXIMATE BOUNDARY LINES BETWEEN SOIL TYPES IN-SITU THE TRANSITION MAY BE GRADUAL

WL 8.0 FEET WS OR WD	BORING STARTED 03-30-94	TOPSOIL DEPTH: N/A
WL BCR ACR	BORING COMPLETED 03-30-94	CAVE IN DEPTH @
WL	RIG ECS FOREMAN	DRILLING METHOD WASH (WB)

OWNER	JOB #	BORING #	SHEET
UNITED STATES NAVY	N1221	B-10	3 OF 3
PROJECT NAME	ARCHITECT-ENGINEER		
BEQ (P-090T)	KROSKIN DESIGN GROUP		

SITE LOCATION: MCAS CHERRY POINT, NORTH CAROLINA

CALIBRATED PENETROMETER TONS/FT.^{2} (1, 2, 3, 4, 5+)

PLASTIC LIMIT % (X) — WATER CONTENT % — LIQUID LIMIT % (Δ) (10, 20, 30, 40, 50+)

STANDARD PENETRATION BLOWS/FT. (⊗) (10, 20, 30, 40, 50+)

SURFACE ELEVATION 24.00

DEPTH (FT)	SAMPLE NO.	SAMPLE TYPE	SAMPLE DISTANCE (IN)	RECOVERY (IN)	DESCRIPTION OF MATERIAL	ELEVATION (FT)
60						
	17	SS	18	18		40
65					Silty Fine to Medium SAND, With Marine Shell Fragments, Tan, Wet, Dense, (SP-SM)	
	18	SS	18	18		45
70					END OF BORING @ 70.0'	
75						50
80						55
85						60
90						65

⊗ 24 (at 40)

⊗ 41 (at 45)

THE STRATIFICATION LINES REPRESENT THE APPROXIMATE BOUNDARY LINES BETWEEN SOIL TYPES IN-SITU THE TRANSITION MAY BE GRADUAL

WL 8.0 FEET WS OR (WD)	BORING STARTED 03-30-94	TOPSOIL DEPTH: N/A
WL BCR ACR	BORING COMPLETED 03-30-94	CAVE IN DEPTH @
WL	RIG ECS FOREMAN	DRILLING METHOD WASH (WB)

OWNER	JOB #	BORING #	SHEET
UNITED STATES NAVY	N1221	B-11	1 OF 3

PROJECT NAME	ARCHITECT-ENGINEER
BEQ (P-090T)	KROSKIN DESIGN GROUP

SITE LOCATION
MCAS CHERRY POINT, NORTH CAROLINA

SURFACE ELEVATION 24.00

CALIBRATED PENETROMETER TONS/FT.^{2} (1, 2, 3, 4, 5+)

PLASTIC LIMIT % X — WATER CONTENT % — LIQUID LIMIT % Δ (10, 20, 30, 40, 50+)

STANDARD PENETRATION BLOWS/FT. (⊗) (10, 20, 30, 40, 50+)

DEPTH (FT)	SAMPLE NO.	SAMPLE TYPE	SAMPLE DISTANCE (IN)	RECOVERY (IN)	DESCRIPTION OF MATERIAL	ELEVATION (FT)	STANDARD PENETRATION BLOWS/FT.
0	1	SS	24	24	Silty Fine SAND, Black, Moist, Loose, (FILL)		7
	2	SS	24	24	Clayey SAND, Trace Silt, Orange and Gray Mottled, Moist, Loose, (SC)	20	7
5	3	SS	24	24			6
	4	SS	24	24	Silty CLAY, With Sand Lenses, Light Gray, Wet, Very Soft, (CH)		4
	5	SS	24	24		15	2
10	6	SS	24	24			2
					Silty Fine to Coarse SAND, Trace Clay Lenses, Orange and Tan, Wet to Saturated, Loose to Medium Dense, (SM)	10	
15	7	SS	18	18			6
						5	
20	8	SS	18	18			4
						0	
25	9	SS	18	18			7
						-5	
30	10	SS	18	18			11

CONTINUED ON NEXT PAGE.

THE STRATIFICATION LINES REPRESENT THE APPROXIMATE BOUNDARY LINES BETWEEN SOIL TYPES IN-SITU THE TRANSITION MAY BE GRADUAL

WL 8.0 FEET WS OR WD	BORING STARTED 03-22-94	TOPSOIL DEPTH: N/A
WL BCR ACR	BORING COMPLETED 03-22-94	CAVE IN DEPTH @
WL	RIG ECS FOREMAN	DRILLING METHOD WASH (WB)

OWNER	JOB #	BORING #	SHEET
UNITED STATES NAVY	N1221	B-11	2 OF 3
PROJECT NAME	ARCHITECT-ENGINEER		
BEQ (P-090T)	KROSKIN DESIGN GROUP		

SITE LOCATION
MCAS CHERRY POINT, NORTH CAROLINA

CALIBRATED PENETROMETER TONS/FT.^{2} (1, 2, 3, 4, 5+)
PLASTIC LIMIT % (X) — WATER CONTENT % — LIQUID LIMIT % (Δ) (10, 20, 30, 40, 50+)
STANDARD PENETRATION BLOWS/FT. (⊗) (10, 20, 30, 40, 50+)

DEPTH (FT)	SAMPLE NO.	SAMPLE TYPE	SAMPLE DISTANCE (IN)	RECOVERY (IN)	DESCRIPTION OF MATERIAL	ELEVATION (FT)
					SURFACE ELEVATION 24.00	
30						
	11	SS	18	18		10
35					Silty Fine to Coarse SAND, Trace Marine Shell Fragments, Gray, Saturated, Dense, (SP-SM)	
	12	SS	18	18		15
40						
	13	SS	18	18		20
45						
	14	SS	18	18		25
50						
	15	SS	18	18		30
55					Silty Fine SAND, Trace Clay, Greenish Gray, Moist, Medium Dense, (SM)	
	16	SS	18	18		35
60						

Penetrometer values: 8, 68, 213, 40, 12, 13

CONTINUED ON NEXT PAGE.

THE STRATIFICATION LINES REPRESENT THE APPROXIMATE BOUNDARY LINES BETWEEN SOIL TYPES IN-SITU THE TRANSITION MAY BE GRADUAL

WL 8.0 FEET WS OR WD	BORING STARTED 03-22-94	TOPSOIL DEPTH: N/A
WL BCR ACR	BORING COMPLETED 03-22-94	CAVE IN DEPTH @
WL	RIG ECS FOREMAN	DRILLING METHOD WASH (WB)

OWNER	JOB #	BORING #	SHEET
UNITED STATES NAVY	N1221	B-11	3 OF 3
PROJECT NAME	ARCHITECT-ENGINEER		
BEQ (P-090T)	KROSKIN DESIGN GROUP		

SITE LOCATION
MCAS CHERRY POINT, NORTH CAROLINA

DEPTH (FT)	SAMPLE NO.	SAMPLE TYPE	SAMPLE DISTANCE (IN)	RECOVERY (IN)	DESCRIPTION OF MATERIAL	ELEVATION (FT)
					SURFACE ELEVATION 24.00	
60						40
	17	SS	18	18		
65					Silty Fine to Medium SAND, With Marine Shell Fragments, Tan, Wet, Dense, (SP-SM)	45
	18	SS	18	18		
70					END OF BORING @ 70.0'	50
75						55
80						60
85						65
90						

CALIBRATED PENETROMETER TONS/FT.^{2}
1 2 3 4 5+

PLASTIC LIMIT % X — WATER CONTENT % — LIQUID LIMIT % Δ
10 20 30 40 50+

STANDARD PENETRATION BLOWS/FT.
10 20 30 40 50+

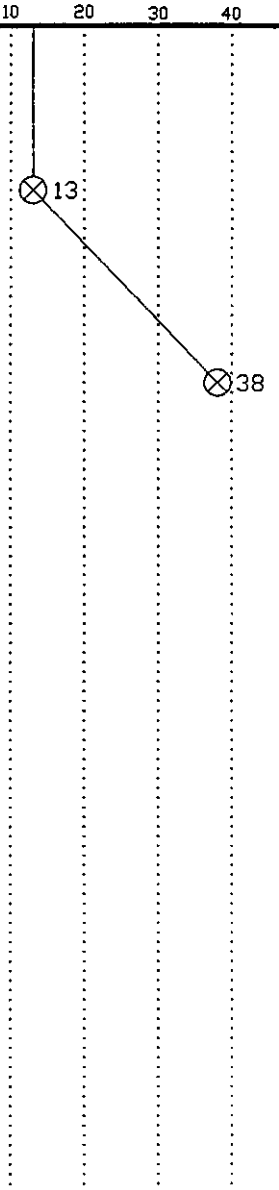

THE STRATIFICATION LINES REPRESENT THE APPROXIMATE BOUNDARY LINES BETWEEN SOIL TYPES IN-SITU THE TRANSITION MAY BE GRADUAL

WL 8.0 FEET WS OR (D)	BORING STARTED 03-22-94	TOPSOIL DEPTH: N/A
WL BCR ACR	BORING COMPLETED 03-22-94	CAVE IN DEPTH @
WL	RIG ECS FOREMAN	DRILLING METHOD WASH (WB)

OWNER	JOB #	BORING #	SHEET
UNITED STATES NAVY	N1221	B-12	1 OF 3
PROJECT NAME	ARCHITECT-ENGINEER		
BEQ (P-090T)	KROSKIN DESIGN GROUP		

SITE LOCATION
MCAS CHERRY POINT, NORTH CAROLINA

CALIBRATED PENETROMETER TONS/FT.^{2} (1, 2, 3, 4, 5+)

PLASTIC LIMIT % (X) — WATER CONTENT % — LIQUID LIMIT % (Δ)

STANDARD PENETRATION BLOWS/FT. (10, 20, 30, 40, 50+)

DEPTH (FT)	SAMPLE NO.	SAMPLE TYPE	SAMPLE DISTANCE (IN)	RECOVERY (IN)	DESCRIPTION OF MATERIAL	ELEVATION (FT)	STANDARD PENETRATION BLOWS/FT.
					SURFACE ELEVATION 24.00		
0	1	SS	24	24	Silty SAND, Trace Organic Fragments, Brownish Gray, Moist, Loose, (FILL)	20	8
	2	SS	24	24	Silty CLAY, Trace Sand, Orange and Gray Mottled, Moist, Medium Stiff, (CL)		10
5	3	SS	24	24			9
	4	SS	24	24	Silty Fine to Medium SAND, With Interbedded Gray Clay Seams, Gray and Tan, Wet to Saturated, Very Loose, Very Soft, (SM+CL)	15	3
	5	SS	24	24			2
10	6	SS	24	24	Silty Fine to Coarse SAND, Gray and Tan, Saturated, Very Loose, (SM)		2
						10	
15	7	SS	18	18			4
						5	
20	8	SS	18	18			9
						0	
25	9	SS	18	18			7
						-5	
30	10	SS	18	18			9

CONTINUED ON NEXT PAGE.

THE STRATIFICATION LINES REPRESENT THE APPROXIMATE BOUNDARY LINES BETWEEN SOIL TYPES IN-SITU THE TRANSITION MAY BE GRADUAL

WL 8.0 FEET WS OR (WI)	BORING STARTED 03-22-94	TOPSOIL DEPTH: N/A
WL BCR ACR	BORING COMPLETED 03-24-94	CAVE IN DEPTH @
WL	RIG ECS FOREMAN	DRILLING METHOD WASH (WB)

OWNER	JOB #	BORING #	SHEET
UNITED STATES NAVY	N1221	B-12	2 OF 3
PROJECT NAME	ARCHITECT-ENGINEER		
BEQ (P-090T)	KROSKIN DESIGN GROUP		

SITE LOCATION
MCAS CHERRY POINT, NORTH CAROLINA

CALIBRATED PENETROMETER TONS/FT.^{2} (1, 2, 3, 4, 5+)

PLASTIC LIMIT % X — WATER CONTENT % ● — LIQUID LIMIT % Δ (10, 20, 30, 40, 50+)

STANDARD PENETRATION BLOWS/FT. ⊗ (10, 20, 30, 40, 50+)

SURFACE ELEVATION 24.00

DEPTH (FT)	SAMPLE NO.	SAMPLE TYPE	SAMPLE DISTANCE (IN)	RECOVERY (IN)	DESCRIPTION OF MATERIAL	ELEVATION (FT)	STANDARD PENETRATION BLOWS/FT.
30							
	11	SS	18	18		-10	15
35							
	12	SS	18	18		-15	58
40							
	13	SS	18	18	Clayey Fine to Medium SAND, With Marine Shell Fragments, Gray, Wet, Loose, (SP-SC)	-20	104
45							
	14	SS	18	18		-25	6
50							
					Silty Fine SAND, Trace Clay, Greenish Gray, Moist, Medium Dense, (SM)		
	15	SS	18	18		-30	23
55							
	16	SS	18	18		-35	37
60							

CONTINUED ON NEXT PAGE.

THE STRATIFICATION LINES REPRESENT THE APPROXIMATE BOUNDARY LINES BETWEEN SOIL TYPES IN-SITU THE TRANSITION MAY BE GRADUAL

WL 8.0 FEET WS OR (WD)	BORING STARTED 03-22-94	TOPSOIL DEPTH: N/A
WL BCR ACR	BORING COMPLETED 03-24-94	CAVE IN DEPTH @
WL	RIG ECS FOREMAN	DRILLING METHOD WASH (WB)

OWNER	JOB #	BORING #	SHEET
UNITED STATES NAVY	N1221	B-12	3 OF 3

ECS LTD

PROJECT NAME	ARCHITECT-ENGINEER
BEQ (P-090T)	KROSKIN DESIGN GROUP

SITE LOCATION
MCAS CHERRY POINT, NORTH CAROLINA

SURFACE ELEVATION 24.00

DEPTH (FT)	SAMPLE NO.	SAMPLE TYPE	SAMPLE DISTANCE (IN)	RECOVERY (IN)	DESCRIPTION OF MATERIAL	ELEVATION (FT)
60						
					Silty Fine to Medium SAND, With Marine Shell Fragments, Tan, Saturated, Dense to Very Dense, (SP-SM)	
	17	SS	18	18		-40
65						
	18	SS	18	18		-45
70					END OF BORING @ 70.0'	
75						-50
80						-55
85						-60
90						-65

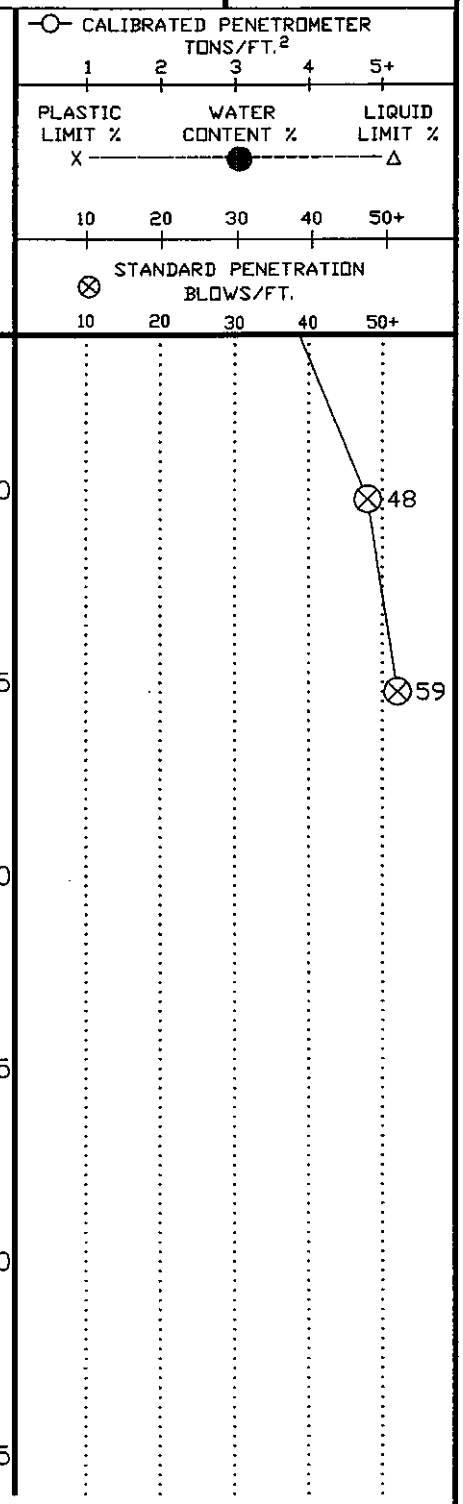

THE STRATIFICATION LINES REPRESENT THE APPROXIMATE BOUNDARY LINES BETWEEN SOIL TYPES IN-SITU THE TRANSITION MAY BE GRADUAL

WL 8.0 FEET WS OR WD	BORING STARTED 03-22-94	TOPSOIL DEPTH: N/A
WL BCR ACR	BORING COMPLETED 03-24-94	CAVE IN DEPTH @
WL	RIG ECS FOREMAN	DRILLING METHOD WASH (WB)

OWNER	JOB #	BORING #	SHEET
UNITED STATES NAVY	N1221	B-14	1 OF 1

PROJECT NAME	ARCHITECT-ENGINEER
BEQ (P-090T)	KROSKIN DESIGN GROUP

SITE LOCATION
MCAS CHERRY POINT, NORTH CAROLINA

CALIBRATED PENETROMETER, TONS/FT.^{2} (1, 2, 3, 4, 5+)

PLASTIC LIMIT % (X) — WATER CONTENT % — LIQUID LIMIT % (Δ) (10, 20, 30, 40, 50+)

STANDARD PENETRATION BLOWS/FT. (⊗) (10, 20, 30, 40, 50+)

DEPTH (FT)	SAMPLE NO.	SAMPLE TYPE	SAMPLE DISTANCE (IN)	RECOVERY (IN)	DESCRIPTION OF MATERIAL	ELEVATION (FT)	STANDARD PENETRATION BLOWS/FT.
					SURFACE ELEVATION 24.00		
0	1	SS	24	24	Silty SAND, Black, Moist, Very Loose, (FILL)	24	4
	2	SS	24	24	Sandy CLAY, Trace Silt, Orange and Gray Mottled, Moist, Medium Stiff, (CL)	20	6
5	3	SS	24	24	Silty Fine SAND, Grayish Tan, Moist, Loose to Medium Dense, (SM)		6
	4	SS	24	24			12
	5	SS	24	24	Silty CLAY, Medium Gray, Wet, Very Soft, (CH) [Sand Seam at 10 Feet]	15	2
10	6	SS	24	24			2
	7	SS	18	18	Silty Fine to Medium SAND, With Clay Lenses, Tannish Orange, Very Loose, (SP+SM)	10	5
15							
	8	SS	18	18		5	1
20					END OF BORING @ 20.0'		
						0	
25							
						-5	
30							

THE STRATIFICATION LINES REPRESENT THE APPROXIMATE BOUNDARY LINES BETWEEN SOIL TYPES IN-SITU THE TRANSITION MAY BE GRADUAL

WL 10.0' WS OR WD	BORING STARTED 03-18-94	TOPSOIL DEPTH: 3"
WL BCR ACR	BORING COMPLETED 03-18-94	CAVE IN DEPTH @ 8.0 FEET
WL	RIG ECS FOREMAN	DRILLING METHOD WASH (WB)

Appendix III

Laboratory Test Results

SUMMARY OF LABORATORY TEST DATA

PROJECT
BEQ

ECS PROJECT No.
N-1221

BORING NUMBER	SAMPLE NUMBER	DEPTH (Ft.)	MOISTURE CONTENT%	% PASSING No. 200	PLASTICITY LL / PI	USCS SYMBOL
B-1	1	0 - 2	18.7			FILL
B-1	2	2 - 4	14.9			FILL
B-1	3	4 - 6	19.6			CL
B-1	4	6 - 8	27.7			CL
B-1	5	8 - 10	19.2			SC
B-1	6	10 - 12	18.7			SC
B-2	1	0 - 2	17.9			FILL
B-2	2	2 - 4	18.9			CL
B-2	3	4 - 6	17.5			CL
B-2	4	6 - 8	34.5			CL
B-2	5	8 - 10	22.4			SM+SP
B-2	6	10 - 12	17.7			SM+SP

SUMMARY OF LABORATORY TEST DATA

PROJECT
BEQ

ECS PROJECT No.
N-1221

BORING NUMBER	SAMPLE NUMBER	DEPTH (Ft.)	MOISTURE CONTENT%	% PASSING No. 200	PLASTICITY LL / PI	USCS SYMBOL
B-5	1	0 - 2	18.8			FILL
B-5	2	2 - 4	12.7			SM
B-5	3	4 - 6	22.0			SM
B-5	4	6 - 8	9.8			SM
B-5	5	8 - 10	28.6			SM
B-5	6	10 - 12	30.7			SM
B-6	1	0 - 2	6.1			FILL
B-6	2	2 - 4	8.5			SM+SP
B-6	3	4 - 6	11.8			SM+SP
B-6	4	6 - 8	6.6			SM+SP
B-6	5	8 - 10	14.5			SM+SP
B-6	6	10 - 12	24.8			SM+SP

SUMMARY OF LABORATORY TEST DATA

PROJECT
BEQ

ECS PROJECT No.
N-1221

BORING NUMBER	SAMPLE NUMBER	DEPTH (Ft.)	MOISTURE CONTENT%	% PASSING No. 200	PLASTICITY LL / PI	USCS SYMBOL
B-7	1	0 - 2	17.8			FILL
B-7	2	2 - 4	18.8			SC-CL
B-7	3	4 - 6	75.8			SC-CL
B-7	4	6 - 8	14.0			SM
B-7	5	8 - 10	29.4			SP+SM
B-7	6	10 - 12	25.2			SP+SM
B-8	1	0 - 2	17.2			FILL
B-8	2	2 - 4	14.6			FILL
B-8	3	4 - 6	34.5			CL
B-8	4	6 - 8	24.9			CL
B-8	5	8 - 10	25.5			CL
B-8	6	10 - 12	24.1			SM

SUMMARY OF LABORATORY TEST DATA

PROJECT
BEQ

ECS PROJECT No.
N-1221

BORING NUMBER	SAMPLE NUMBER	DEPTH (Ft.)	MOISTURE CONTENT%	% PASSING No. 200	PLASTICITY LL / PI	USCS SYMBOL
B-9	1	0 - 2	23.5			CL
B-9	2	2 - 4	24.8			CL
B-9	3	4 - 6	22.1			SP-SM
B-9	4	6 - 8	23.1			SP-SM
B-9	5	8 - 10	22.1			SP-SM
B-9	6	10 - 12	21.7			SP-SM
B-10	1	0 - 2	13.2			FILL
B-10	2	2 - 4	15.9			CL
B-10	3	4 - 6	20.5			SP-SM
B-10	4	6 - 8	37.5			SP-SM
B-10	5	8 - 10	No Sample			CH
B-10	6	10 - 12	76.0	77.8	93 / 62	CH
B-10	10	36-38.5		12.7		SM
B-10	12	38.5-40		5.7		SP-SM
B-10	16	58.5-60		17.7		SM

SUMMARY OF LABORATORY TEST DATA

PROJECT
BEQ

ECS PROJECT No.
N-1221

BORING NUMBER	SAMPLE NUMBER	DEPTH (Ft.)	MOISTURE CONTENT%	% PASSING No. 200	PLASTICITY LL / PI	USCS SYMBOL
B-11	1	0 - 2	17.3			FILL
B-11	2	2 - 4	11.4			SC
B-11	3	4 - 6	19.1			SC
B-11	4	6 - 8	57.7			CH
B-11	5	8 - 10	42.3			CH
B-11	6	10 - 12	36.2			CH
B-12	1	0 - 2	18.1			FILL
B-12	2	2 - 4	22.8			CL
B-12	3	4 - 6	20.0			SM+CL
B-12	4	6 - 8	44.0			SM+CL
B-12	5	8 - 10	44.7			SM+CL
B-12	6	10 - 12	24.2			SM

SUMMARY OF LABORATORY TEST DATA

PROJECT
BEQ

ECS PROJECT No.
N-1221

BORING NUMBER	SAMPLE NUMBER	DEPTH (Ft.)	MOISTURE CONTENT%	% PASSING No. 200	PLASTICITY LL / PI	USCS SYMBOL
B-13	1	0 - 2	18.6			FILL
B-13	2	2 - 4	23.7			CL
B-13	3	4 - 6	21.8			CH
B-13	4	6 - 8	28.1			CL
B-13	5	8 - 10	28.7			SM+SP
B-13	6	10 - 12	20.5			SM+SP
B-14	1	0 - 2	20.0			FILL
B-14	2	2 - 4	21.4			CL
B-14	3	4 - 6	18.7			SM
B-14	4	6 - 8	22.7			SM
B-14	5	8 - 10	63.0			CH
B-14	6	10 - 12	47.0			CH

	P-136 Design Guidance	
	Description	**Where found in the RFP**
1	Provide full-size horseshoe pits, basketball courts, and volleyball courts.	1.0 Project Description, eleventh paragraph
2	Provide lighting along sidewalks.	1.0 Project Description, eighth paragraph
3	Provide molded concrete paver pattern at building entrance and 600 square feet adjacent to Multi-Purpose Room.	1.0 Project Description, eleventh paragraph
4	Provide concrete benches and shade canopies.	1.0 Project Description, eleventh paragraph
5	Provide two windows on both sides of a center vertical structural support for each Sleeping Room.	5.0 Room Requirements, Double-Occupancy Unit, Handicap-Accessible Unit
6		
7	Provide minimum 9'-0" interior floor-to-ceiling height, and minimum 12'-0" height for Multi-Purpose Room.	5.0 Room Requirements
8	Provide the option of precast or cast-in-place concrete walls.	1.0 Project Description, seventh paragraph
9	Provide minimum Interior Corridor width of 6'-0".	5.0 Room Requirements, Interior Corridor
10	Provide two elevators for buildings four to five stories in height.	5.0 Room Requirements, Elevators
11	Provide conduit for Closed-Circuit Television system.	1.0 Project Description, eighth paragraph
12	Provide active sightline from Duty Office Check-In Area in Multi-Purpose Room to lounge area of Multi-Purpose Room.	4.0 Building Requirements, 4.2 Space Relationships, third paragraph
13	Provide several activity areas in Multi-Purpose Room, with Kitchenette accessible to Patio Area.	5.0 Room Requirements, Multi-Purpose Room
14	Provide enlarged Sleeping Room Module by expanding Service Area 12" in Head and providing separate toilet room and double sinks.	Part 6 Attachments
15		
16	Provide residential-feel Light-Emitting Diode light fixtures with maximum-controllability where possible and occupancy sensors in Closets and Heads for Sleeping Rooms. Provide one dimmable switch on each side of the Sleeping Rooms.	5.0 Room Requirements, Double-Occupancy Unit, Handicap-Accessible Unit
17	Provide two-door, Energy Star-rated 10.3 cubic foot refrigerator.	5.0 Room Requirements, Double-Occupancy Unit, Handicap-Accessible Unit
18	Provide increased counter length and 14" wide by 8" deep sink at Service Area with gooseneck faucet.	5.0 Room Requirements, Double-Occupancy Unit, Handicap-Accessible Unit
19	Provide minimum of six rows of shelving vertically.	5.0 Room Requirements, Double-Occupancy Unit, Handicap-Accessible Unit
20		
21	Provide doors to Interior Corridor with minimum Sound Transmission Class of 41.	5.0 Room Requirements, Double-Occupancy Unit, Handicap-Accessible Unit
22	Provide residential-feel cementitious, poured terrazzo at Entrance Lobby, Multi-Purpose Room, and Interior Corridors.	5.0 Room Requirements, Entrance Lobby, Multi-Purpose Room, Interior Corridor
23	Provide residential-feel simulated wood grain flooring in the Sleeping Rooms.	5.0 Room Requirements, Double-Occupancy Unit, Handicap-Accessible Unit
24	Provide solid-surfacing shower surround.	5.0 Room Requirements, Double-Occupancy Unit, Handicap-Accessible Unit
25	Provide solid-surfacing shower base.	5.0 Room Requirements, Double-Occupancy Unit, Handicap-Accessible Unit
26	Provide full-height minimum 8" x 8" tiles with accents on walls outside shower area.	5.0 Room Requirements, Double-Occupancy Unit, Handicap-Accessible Unit
27	Provide attention to human scale.	4.0 Building Requirements, 4.3 Exterior Character, third paragraph
28	Provide compatibility with the environment and sustainable design.	2.0 Project Objectives, 2.2 Facility Function, second paragraph
29	Provide campus or community layout.	2.0 Project Objectives, 2.2 Facility Function, second paragraph
30	Provide picnic areas.	1.0 Project Description, eleventh paragraph
31	Provide gas-fired grill and outdoor sink in Patio Area next to Multi-Purpose Room, where gas is available.	1.0 Project Description, eleventh paragraph
32	Provide photovoltaic-covered walkways.	1.0 Project Description, eleventh paragraph
33	Provide photovoltaic-covered carports.	1.0 Project Description, eleventh paragraph
34		
35	Avoid monotonous design features, long unbroken wall planes, long unbroken roof lines, flat roofs, "green" roofs, and mechanical equipment enclosures that appear to be "tacked-on".	4.0 Building Requirements, 4.3 Exterior Character, fifth paragraph
36	Provide maximum Interior Corridor length not to exceed 80'-0" without a change in direction.	4.0 Building Requirements, 4.2 Space Relationships, fifth paragraph
37	Provide LEED Silver rating, consider Gold rating as an option, and avoid Platinum rating.	2.0 Project Objectives, 2.3.1 Sustainable Design, third paragraph
38	Provide elevations and massing broken-up and articulated.	4.0 Building Requirements, 4.3 Exterior Character, third paragraph
39		
40	Provide windows to break up building massing. Provide embellished, ornamental window frames and window trim at entrances.	4.0 Building Requirements, 4.3 Exterior Character, third paragraph
41	Provide enhanced covered entrances and roof structure.	4.0 Building Requirements, 4.3 Exterior Character, third paragraph
42	Provide sunscreens on windows where appropriate.	4.0 Building Requirements, 4.3 Exterior Character, third paragraph

43	Provide direct connection between a Community Building and the Main Building. Buildings may share Multi-Purpose Room.	2.0 Project Objectives, 2.2 Facility Function, second paragraph
44	Provide upgraded Duty Office Check-In Area design.	5.0 Room Requirements, Barracks Manager's Office / Duty Office Check-In Area
45	Provide extended and enhanced warranties.	2.0 Project Objectives, 2.6 Special Design Challenges, third paragraph
46	Provide enhanced and expanded Multi-Purpose Room, including theater seating area, internet cafeteria, game stations, and superior-quality furniture design.	5.0 Room Requirements, Multi-Purpose Room
47	Provide daylighting and lighting controls for flexibility.	2.0 Project Objectives, 2.2 Facility Function, second paragraph, and 2.3.3 Building Commissioning, first paragraph
48	Provide conduit for wireless hardware.	1.0 Project Description, eighth paragraph
49	Provide enhanced and expanded Laundry Room.	4.0 Building Requirements, 4.1 Space Tabulation, and 5.0 Room Requirements, Laundry Room
50	Provide enhanced and expanded Entrance Lobby, which may be connected to the Multi-Purpose Room / Laundry Room.	5.0 Room Requirements, Entrance Lobby (Located within the Multi-Purpose Room)
51	Provide conduit for data in Sleeping Rooms.	5.0 Room Requirements, Double-Occupancy Unit, Handicap-Accessible Unit
52	Provide residential-feel for each building.	2.0 Project Objectives, 2.2 Facility Function, second paragraph
53	Provide enhanced finishes in Interior Corridor.	5.0 Room Requirements, Interior Corridor
54	Provide Duraplex additive, or equal, to plaster veneer on interior face of Concrete Masonry Unit walls.	5.0 Room Requirements, and 6.0 Engineering Systems Requirements, C10 Interior Construction, C1010 Partitions

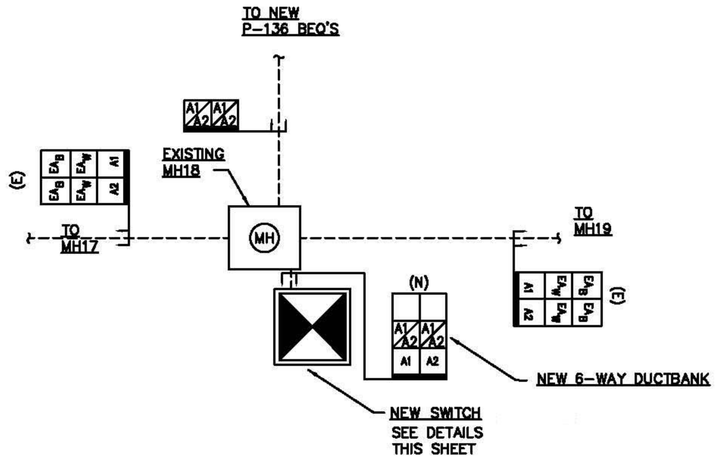

SITE PLAN

NTS

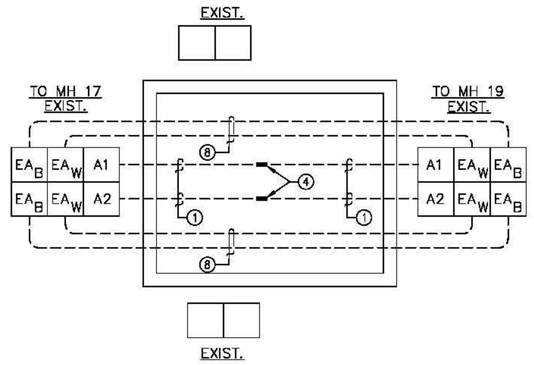

MANHOLE 18 DETAILS (EXISTING)

NO SCALE

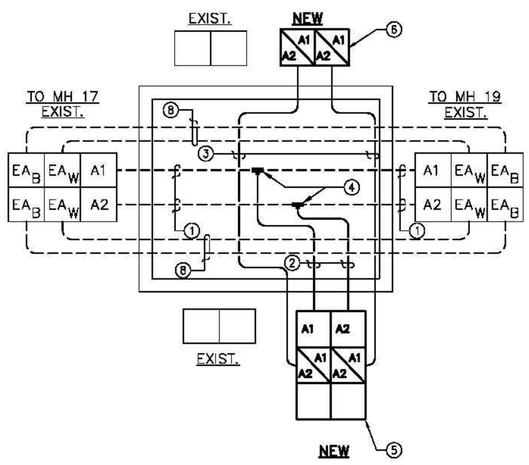

MANHOLE 18 DETAILS (MODIFIED)

NO SCALE

GENERAL NOTES:

THE CONTRACTOR SHALL POSSESS A VALID NC PUBLIC UTILITIES – ELECTRIC LICENSE AND BE INSURED TO DO SUCH WORK IN THE STATE OF NC.

KEYED NOTES:

1. EXISTING 3 #4/0(15KV) & 1 #2/0 (600 VOLT) NEUTRAL.
2. NEW 3 #4/0 (15KV) & 1 #2/0 (600 VOLT) NEUTRAL.
3. NEW 3 #2 (15KV) & 1 #2 (600 VOLT) NEUTRAL.
4. INSTALL NEW TEE TAPE SPLICES IN CONDUCTORS AS SHOWN. CUT OUT EXISTING A1 AND A2 SPLICES AS REQUIRED TO INSTALL NEW TEE SPLICES. PROVIDE NEW 15KV CABLE AS SHOWN TO NEW SWITCH AND SPLICE TO EXISTING CABLES AS SHOWN. PROVIDE CABLE TAGS ON EACH CONDUCTOR IDENTIFYING THE FEEDER AND PHASE. RELABEL EXISTING CABLES AS REQUIRED TO CORRECTLY INDICATE THEIR NEW IDENTITY. HI-POT TEST EACH NEW CABLE SECTION PRIOR TO SPLICING.
5. NEW 6-WAY DUCT BANK FROM MANHOLE TO NEW SWITCH, CONSISTING OF 6-5" SCH 40 PVC CONDUITS DIRECT BURIED. CORE DRILL ALL HOLES IN THE EXISTING MANHOLE AND GROUT AROUND EACH NEW CONDUIT WITH 3000 PSI HYDRAULIC CEMENT.
6. NEW DUCTS FROM MANHOLE TO NEW BEQ TRANSFORMERS, CONSISTING OF 1-5" SCH 40 PVC CONDUIT EACH CONCRETE ENCASED. CORE DRILL ALL HOLES IN THE EXISTING MANHOLE AND GROUT AROUND EACH NEW CONDUIT WITH 3000 PSI HYDRAULIC CEMENT.
7. PROVIDE SWITCH WITH OPTIONS: -L2 (POTENTIAL INDICATION WITH TEST FEATURES AND PROVISIONS FOR LOW-VOLTAGE PHASING); -M4 (200A BUSHING WELLS AT LOAD-INTERRUPTER SWITCH AND BUS TERMINALS).
8. EA (W OR B) – 3#500 15KV EPR & 1#2/0 (600V) N

MATERIAL SPECIFICATIONS:

MEDIUM VOLTAGE CABLE – 1/C, TAPE SHIELD, 15KV EPR 133% INSULATION, CU CONDUCTOR.

MEDIUM VOLTAGE CABLE SPLICES – 15 KV TAPE SPLICE WITH COMPRESSION CONNECTORS.

600V CABLE – 1/C, THWN INSULATION.

ALL ABOVE GROUND GROUNDING CONDUCTOR CONNECTIONS TO BE COMPRESSION TYPE.

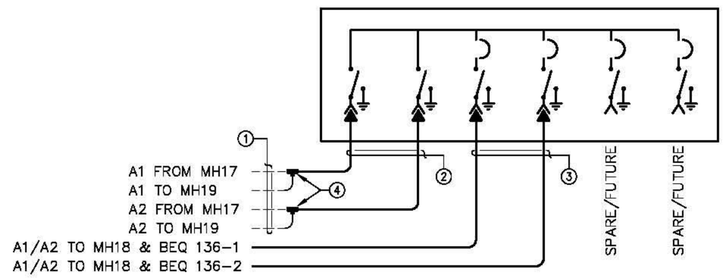

ONE LINE DIAGRAM

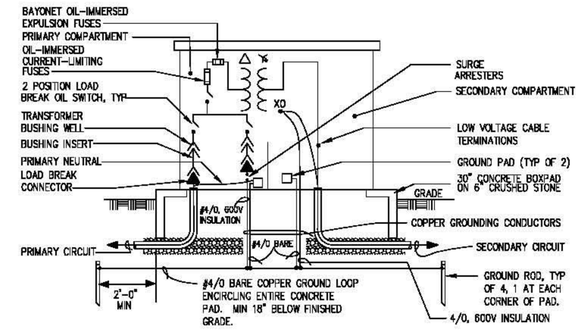

PAD MOUNT TRANSFORMER DETAIL

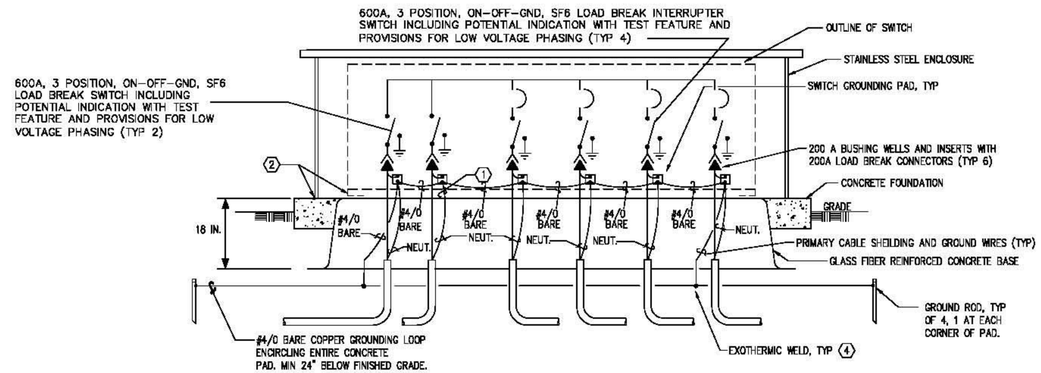

6-WAY SF6 INSULATED PAD MOUNTED SWITCH DETAIL

NO SCALE

KEYED NOTES: (SWITCH DETAIL ONLY)

1. ALL GROUND CONNECTIONS IN PAD MOUNTED TRANSFORMERS AND SWITCHES SHALL BE COMPRESSION TYPE ONLY.
2. PROVIDE CONCRETE FOUNDATION WITH 18" DEEP GLASS FIBER REINFORCED CONCRETE BASE. COORDINATE EXACT DIMENSIONS OF FOUNDATION WITH SF6 SWITCH AND ENCLOSURE. COORDINATE SIZE OF BASE WITH SWITCH SUCH THAT ENCLOSURE IS SUPPORTED BY THE CONCRETE FOUNDATION AND SWITCH IS SUPPORTED BY THE CONCRETE BASE. SEE ANCHOR BOLT DETAIL THIS SHEET.
3. SECURE SWITCH AND ENCLOSURE TO PAD WITH ANCHOR BOLTS.
4. ALL UG GROUND CONNECTIONS TO BE EXOTHERMIC WELDS.

DESIGNED & DRAWN BY: FACILITIES ENGINEERING DEPARTMENT (ELECTRICAL)

APPROVED

ACTIVITY – SUBJECT TO

DATE

APPROVED

FOR BID FOR CONTRACTOR MARKS

DATE

	A/E	RPD
DESIGN		RCM
DRAWN		RCM
REVIEW		NAVFAC
QC		NAVFAC
CHIEF ARCH./ ENGR.		
PROJECT MANAGER		RCM
FIRE PROTECTION		N/A
BRANCH MANAGER		RCM
DESIGN DIRECTOR		RL

DEPARTMENT OF THE NAVY
NAVAL FACILITIES ENGINEERING COMMAND
MARINE CORPS AIR STATION, CHERRY POINT, N.C.

NEW BEQS

15KV SWITCH & TRANSFORMER ELECTRICAL DETAILS

CODE ID. NO. 80091	SIZE D
SCALE:	AS SHOWN
FED NO.	P136
NFA PROJ NO.	P136
SPEC. NO.	N/A
CONTR. CONTR. NO.	
NAVFAC DRAWING NO.	
SHEET	1 OF 2

E-1

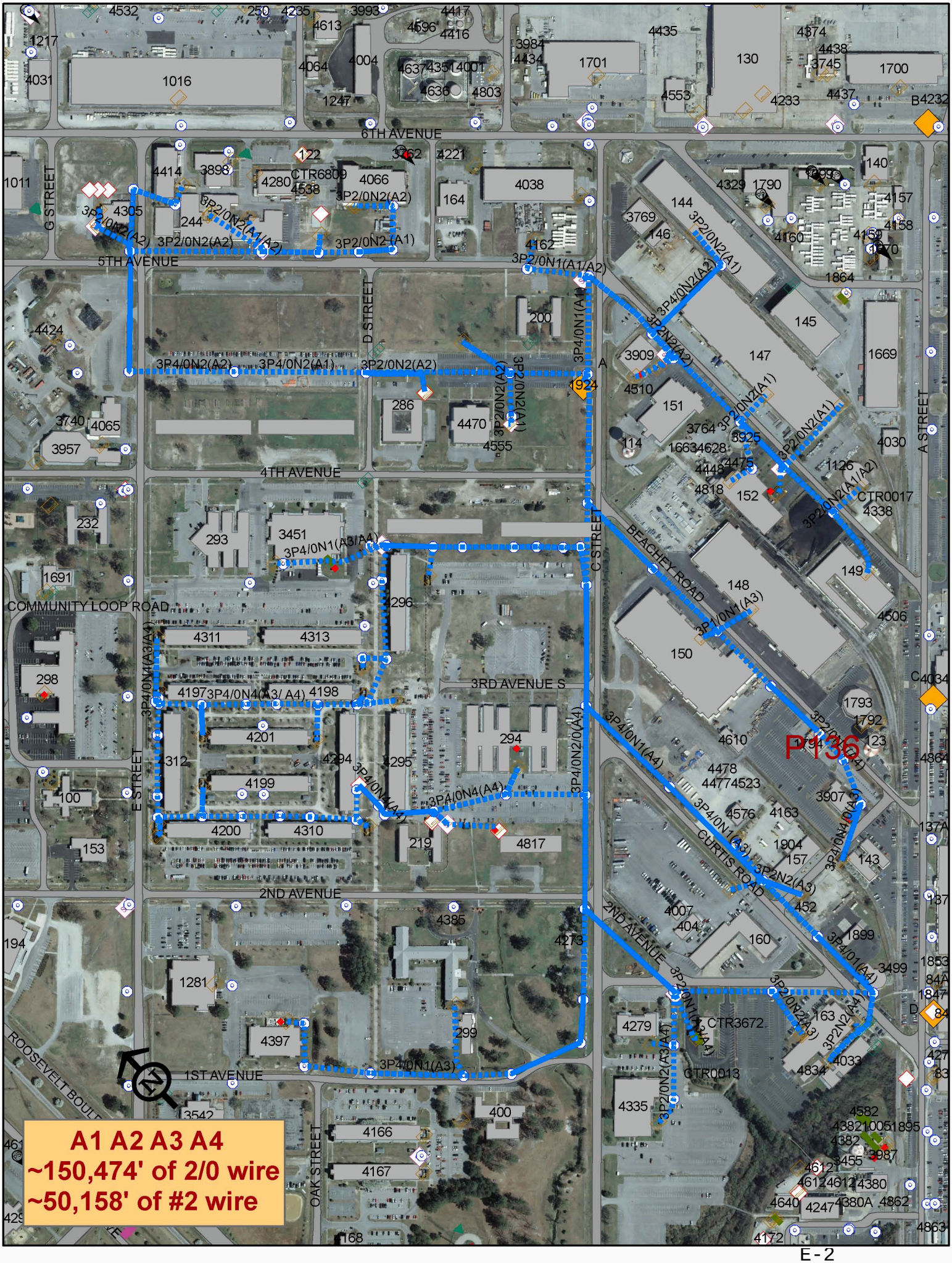
A1 A2 A3 A4
~150,474' of 2/0 wire
~50,158' of #2 wire
P136
6TH AVENUE
5TH AVENUE
4TH AVENUE
3RD AVENUE S
2ND AVENUE
1ST AVENUE
COMMUNITY LOOP ROAD
BEACHEY ROAD
CURTIS ROAD
ROOSEVELT BOULEVARD
G STREET
D STREET
C STREET
E STREET
A STREET
OAK STREET
CTR6809
CTR3672
CTR0013
CTR0017

LEGEND:

- DISCONNECT SWITCH
- GROUP OPERATED DISCONNECT SWITCH
- TRANSFORMER
- LIGHTNING ARRESTOR
- CURRENT TRANSFORMER
- CIRCUIT BREAKER
- GROUND LOCATION
- VOLTAGE REGULATOR
- FUSED DISCONNECT
- CL – CURRENT LIMITING FUSE
- FUSE
- LOW VOLTAGE CIRCUIT BREAKER
- DRAW OUT DEVICE
- CURRENT OR POTENTIAL CIRCUIT
- CONTROL CIRCUIT
- RELAY FUNCTION
- RELAY OR METER

15 KV SECTIONALIZING STATION A

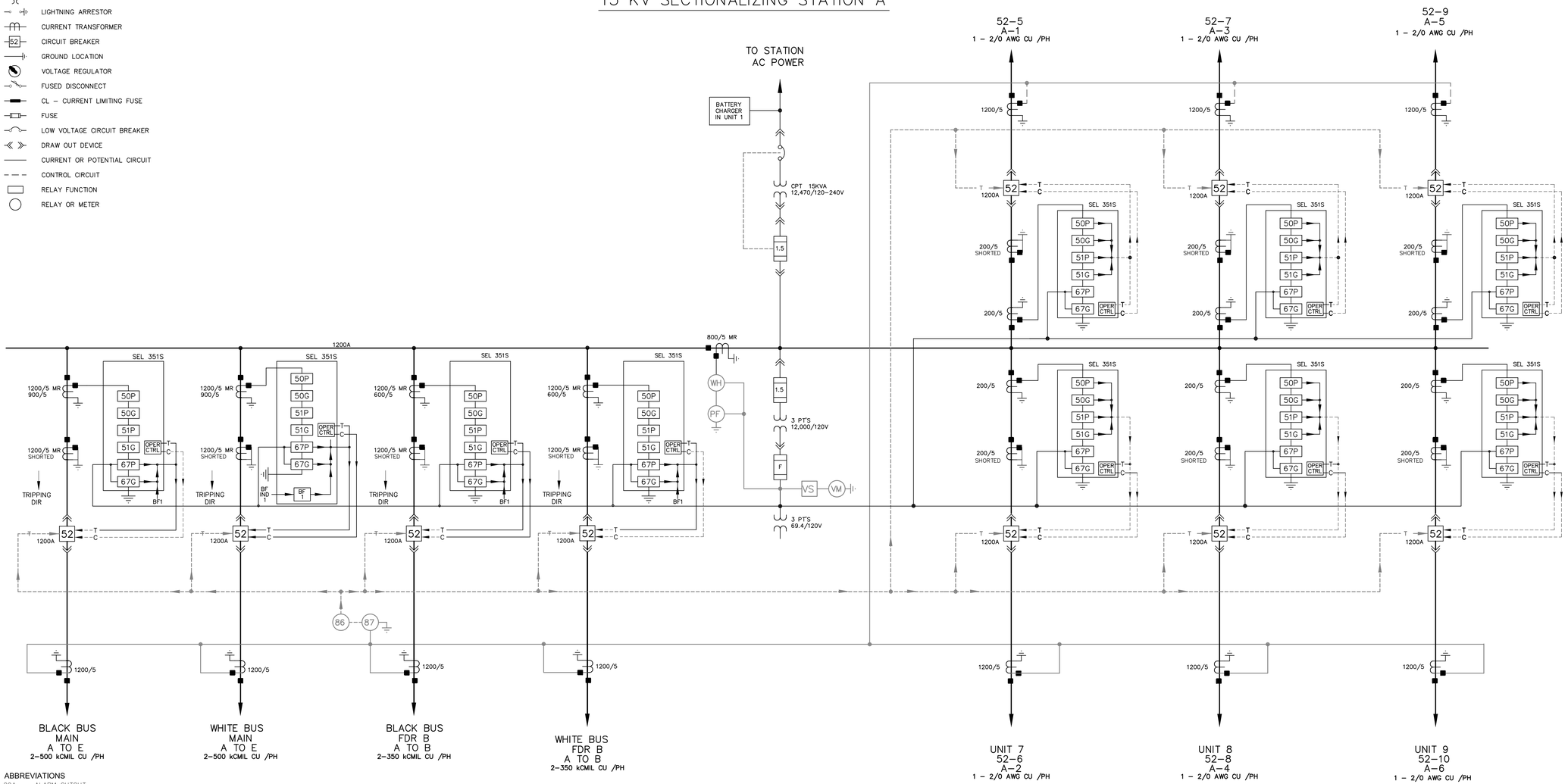

ABBREVIATIONS

29A	ALARM CUTOUT
29D	DIFFERENTIAL CUTOUT
29L	LIQUID LEVEL CUTOUT
29P	SUDDEN PRESSURE CUTOUT
29T	LIQUID TEMPERATURE CUTOUT
29W	WINDING TEMPERATURE CUTOUT
30	TRIPPING RELAY
50	INSTANTANEOUS RELAY FUNCTION P–PHASE G–GROUND
51	OVERCURRENT RELAY FUNCTION P–PHASE G–GROUND
52	POWER CIRCUIT BREAKER
67	DIRECTIONAL OVERCURRENT RELAY FUNCTION P–PHASE G–GROUND
86	LOCKOUT RELAY
87	BUS DIFFERENTIAL RELAY
ACP	AC PANEL
BF	BREAKER FAILURE
CL	CURRENT LIMITING FUSE
CT	CURRENT TRANSFORMER
DCP	DC PANEL
GCB	GAS CIRCUIT BREAKER
GOAB	GROUP–OPERATED AIRBREAK SWITCH
LL	LIQUID LEVEL
LT	LIQUID TEMPERATURE
MR	MULTI–RATIO
PT	POTENTIAL (VOLTAGE) TRANSFORMER
ROP	RELAY CONTROL PANEL
RF	RELAY FAILURE
RVM	RECORDING VOLTMETER
SP	SUDDEN PRESSURE
V	VOLTAGE METER
VCB	VACUUM CIRCUIT BREAKER
VRT	VAR TRANSDUCER
VS	VOLTAGE SWITCH
VT	VOLTAGE TRANSDUCER
WDT	WATT DEMAND TRANSDUCER
WHD	WATTHOUR DEMAND METER
WT	WINDING TEMPERATURE

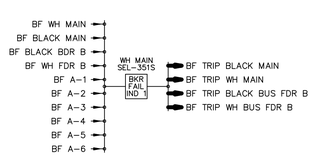

BREAKER FAILURE CIRCUIT

SINGLE LINE DIAGRAM

NO SCALE

DESIGNED & ENGINEERED BY:

UTILITY TECHNOLOGY ENGINEERS CONSULTANTS
P.O. Box 2629
Asheboro, North Carolina 27204

NORTH CAROLINA PROFESSIONAL SEAL 16346 ENGINEER BRIAN KLINE

SEAL

APPROVED

ACTIVITY – SATISFACTORY TO

DATE

APPROVED

FOR EFD FOR COMMANDER NAVFAC

DATE

A/E	EFD
KBK	DESIGN
PEA	DRAWN
GWM	REVIEW
JSB	QC
	CHIEF ARCH./ ENGR.
	PROJECT MANAGER
	FIRE PROTECTION
RCM	BRANCH MANAGER
CAC	DESIGN DIRECTOR

DEPARTMENT OF THE NAVY
NAVAL FACILITIES ENGINEERING COMMAND
MARINE CORPS AIR STATION, CHERRY POINT, N.C.

REPAIR ELECTRICAL DISTRIBUTION SYSTEM

STATION A RELAY ONE–LINE

CODE ID. NO. 80091 | SIZE D

SCALE: AS SHOWN
FED NO. 5267
STA. PROJ. NO. CP0315M
SPEC. NO. 05041154
CONSTR. CONTR. NO. N64270–04–C–1154
NAVFAC DRAWING NO. 4483123
SHEET 28 OF 57

E–6

DATE APP'R DESCRIPTION MK

8 7 6 5 4 3 2 1

D C B A

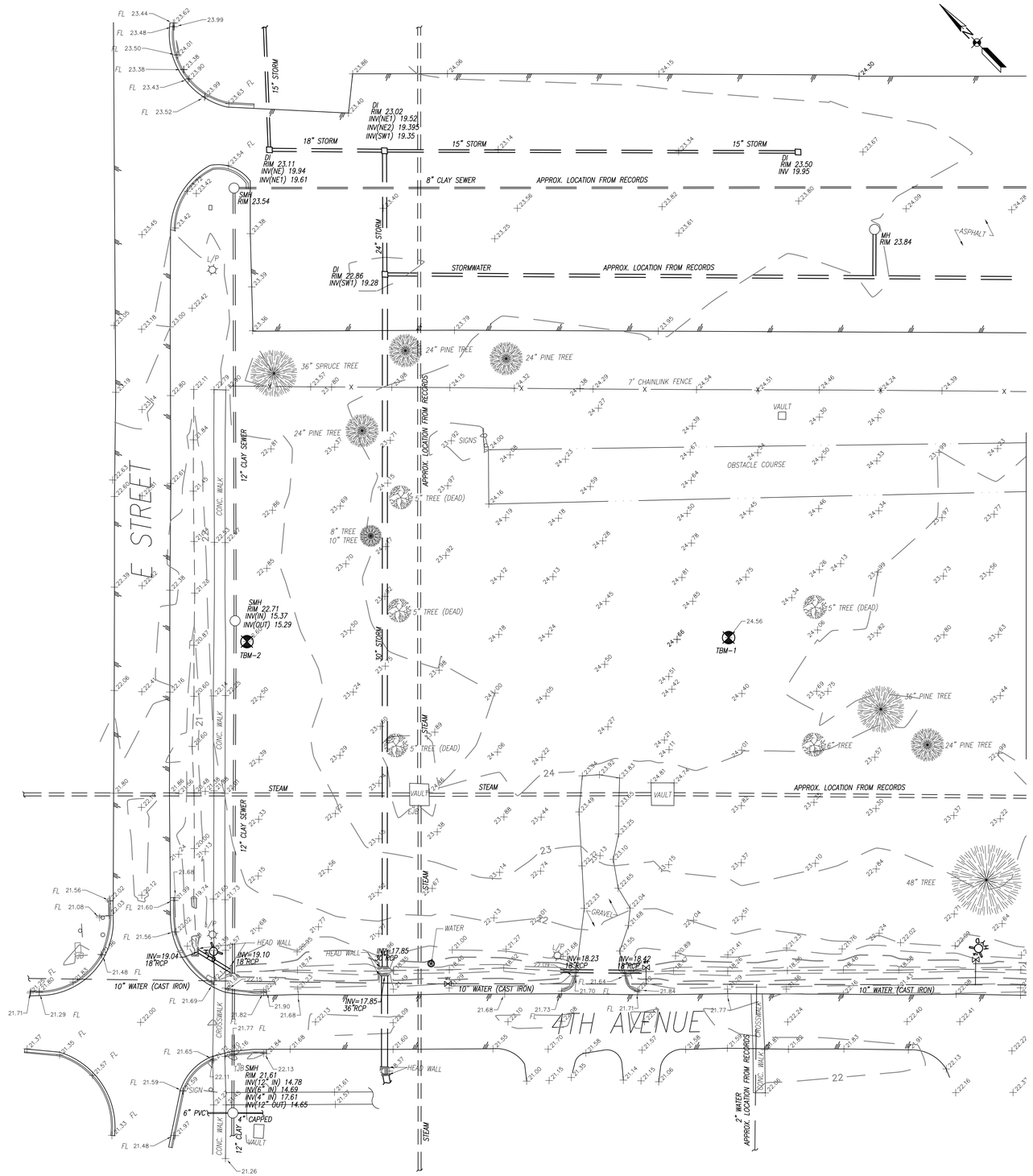

LEGEND

EXISTING

- BITUMINOUS CONCRETE
- CONCRETE
- CONCRETE CURB
- CHAINLINK FENCE
- SPOT ELEVATION
- CONTOUR
- TREE
- CATCH BASIN
- CURB DROP INLET
- STORM SEWER
- MANHOLE

8" CLAY SEWER SANITARY SEWER

- WATER
- FIRE HYDRANT
- WATER VALVE
- TEMPORARY BENCH MARK
- STEAM
- OVERHEAD ELECTRIC
- UNDERGROUND ELECTRIC
- POWER POLE
- LIGHT POLE
- GUY WIRE
- TELEPHONE

GRAPHIC SCALE

1" = 30'

0 15' 30' 60'

APPR	DATE	DESCRIPTION	SYM

APPROVED

FOR COMMANDER NAVFAC DATE

APPROVED

XXXXX

ACTIVITY - SATISFACTORY TO DATE DD/MM/YY

PM/DM XXX

DES XXX DRW NRY CHK XXX

FIRE PROTECTION XXX

BRANCH MANAGER XXX

CHIEF ENG/ARCH XXX

DEPARTMENT OF THE NAVY
NAVAL FACILITIES ENGINEERING COMMAND
MARINE CORPS NORTH CAROLINA IPT

NAVAL FACILITIES ENGINEERING COMMAND MID-ATLANTIC
NAVAL STATION - NORFOLK, VIRGINIA

MCAS CHERRY POINT
HAVELOCK, NC

BACHELORS ENLISTED QUARTERS

SURVEY

CODE ID. NO. 80091 SIZE D

SCALE: AS NOTED

MAXIMO NO.

JOB ORDER NO. P-136

WORK ORDER NO. 5A4760

CONSTR. CONTR. NO.

NAVFAC DRAWING NO. ##########

SHEET 1 OF ##

V-100

DRAWFORM REVISION: 6 AUG 2007

FILE NAME: P:\North_Carolina\MCAS_Cherry_Point\MILCON\2011_WO#796444_P136 DB_RFP_BEQ\Phase A - Pre Design RFP\Drawings\Civil\survey - deleted points.dwg LAYOUT NAME: V-100 PLOTTED: Monday, August 30, 2010 - 10:48am USER: nicholas.r.young1

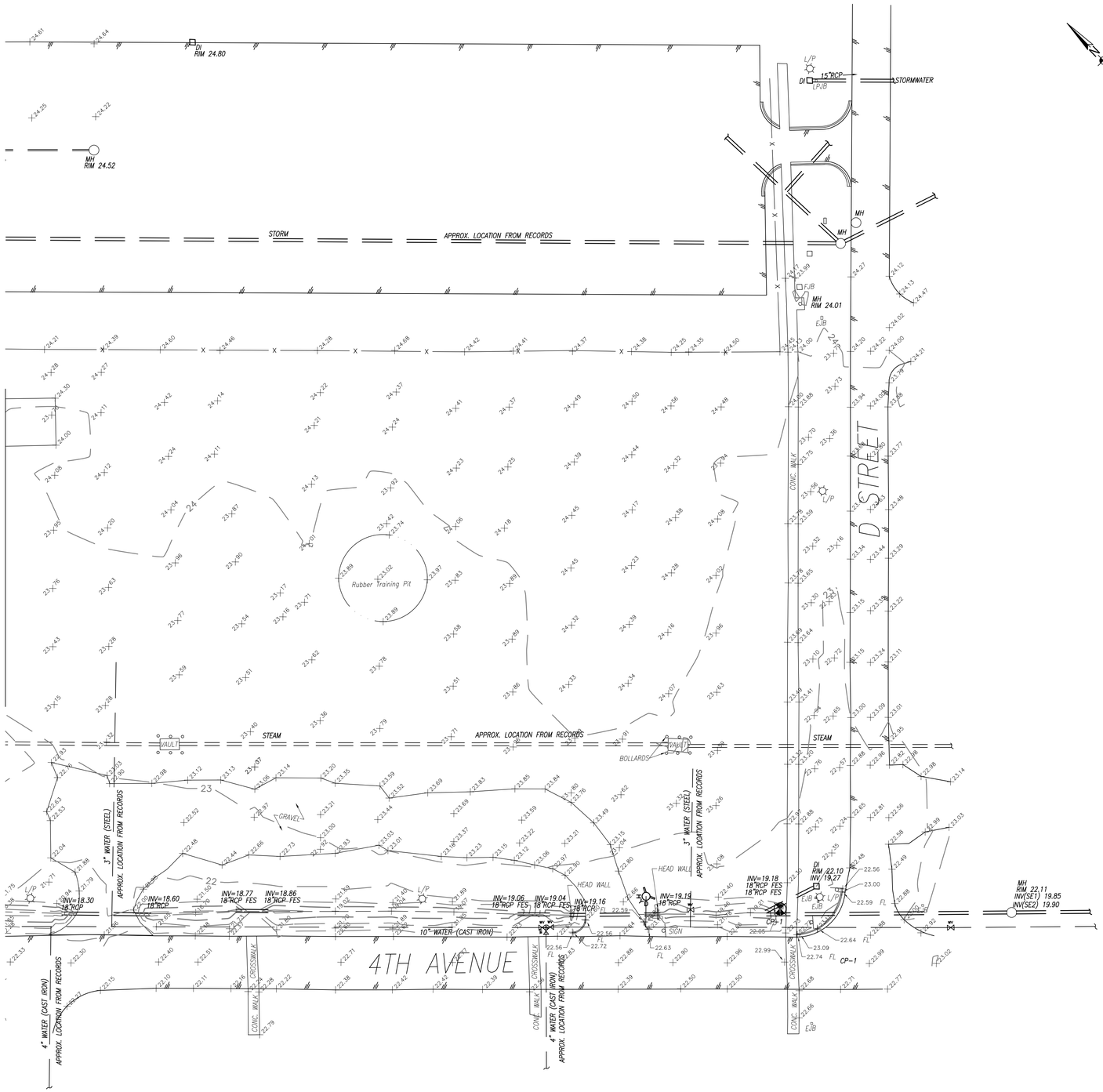

SURVEY NOTES:

1. TOPOGRAPHIC SURVEY PREPARED BY NAVFAC MID-ATLANTIC, IN MARCH OF 2010.
2. THE EXISTENCE, SIZE AND/OR LOCATION OF UTILITIES ARE NOT GUARANTEED BY THIS SURVEY, UTILIITES SHOWN ARE BASED ON ABOVE GROUND STRUCTURES AND AVAILABLE UTILITY PLANS. THE CONTRACTOR SHALL FIELD VERIFY THE LOCATION OF ALL UTLITIES PRIROR TO CONSTRUCTION.
3. ELEVATIONS ARE IN FEET AND REFER TO NORTH AMERICAN VERTICAL DATUM (NAVD) 1988 AND ARE BASED ON CHERRY POINT CONTROL.
4. TEMPORARY BENCHMARK (TBM) IS A NAIL AND HUB (#1 & #2) AS INDICATED, ELEV. #1 = 24.56 AND ELEV. #2 = 22.60
5. COORDINATES SHOWN REFER TO NORTH CAROLINA STATE PLANE COORDINATES (NAD 1983).
6. COORDINATES AND ELEVATIONS WERE ESTABLISHED UTILIZING GPS FROM MCAS. CHERRY POINT CONTROL.

SURVEY CONTROL POINTS

CIVIL POINT # 1
NAIL AND HUB
N = 426425.96
E = 2630299.59
ELEV. = 22.05

TBM # 1
NAIL AND HUB
N = 426916.96
E = 2630027.30
ELEV = 24.56

TBM # 2
NAIL AND HUB
N = 427080.78
E = 2629856.19
ELEV = 22.60

GRAPHIC SCALE

1" = 30'

0 15' 30' 60'

APPR	DATE	DESCRIPTION	MK

NAVFAC

APPROVED
FOR COMMANDER NAVFAC
DATE

APPROVED
XXXXX
ACTIVITY - SATISFACTORY TO DATE DD/MM/YY

PM/DM XXX
DES XXX DRW NRY CHK XXX
FIRE PROTECTION XXX
BRANCH MANAGER XXX
CHIEF ENG/ARCH XXX

DEPARTMENT OF THE NAVY
NAVAL FACILITIES ENGINEERING COMMAND
MARINE CORPS NORTH CAROLINA IPT
NAVAL FACILITIES ENGINEERING COMMAND MID-ATLANTIC
NAVAL STATION - NORFOLK, VIRGINIA
MCAS CHERRY POINT
HAVELOCK, NC

BACHELORS ENLISTED QUARTERS

SURVEY

CODE ID. NO. 80091 SIZE D
SCALE: AS NOTED
MAXIMO NO.
JOB ORDER NO. P-136
WORK ORDER NO. 5A4760
CONSTR. CONTR. NO.
NAVFAC DRAWING NO. ##########
SHEET 2 OF ##

V-101

DRAWFORM REVISION: 6 AUG 2007

FILE NAME: P:\North_Carolina\MCAS_Cherry_Point\MILCON\2011_WO#796444_P136_BB_RFP_BEQ\Phase A - Pre Design RFP\Drawings\Civil\survey - deleted points.dwg LAYOUT NAME: V-101 PLOTTED: Monday, August 30, 2010 - 10:49am USER: nicholas.r.young1