Test Report

Korea Marine Equipment Research Institute
435, Haeyang-ro Yeongdo-gu, Busan 49111 Rep of KOREA
Tel +82-51-400-5000, Fax +82-51-400-5091

Report No : KOMERI-0906-13T531-2

http://www.komeri.re.kr

Korea Marine Equipment Research Institute

시정확인 진본 2016/03/25 09:32:57 KST 창원시정확인센터

1. Applicant
   - Company Name : KT MARINE Co., Ltd
   - Address : Centum IS Tower Rm 1808 #1209, Jaesong-dong, Haewndae-gu Busan
   - Date of Receipt : 2013 03 18
2. Equipment under Test
   - Name of Product : Ballast water Treatment system
   - Model : MARINOMATE™ BWMS (MARINOMATE-300)
   - Serial No : MARINO250-1212-001
3. Test Standards : The Provisional Regulation for Type Approval of Ballast Water Management System by the Ministry of Oceans and Fisheries (PR. No. 2013-56, Annex 4 and Annex 6) and Guidelines for Approval of Ballast Water Management Systems (Res MEPC 174(58), Annex, PART 2, 23, 24 & Part 4)
4. Use of Report : Type Approval by the Ministry of Oceans and Fisheries
5. Test Period : 2013 05 30 ~ 2013 09 03
6. Environment
   - Temperature : (min 179 ℃, max 281 ℃),
     Humidity : (min 46 % RH, max 67 % RH)
7. Test Result : Conformity

The result shown in this test report refer only to the sample(s) tested unless otherwise stated

Affirmation	Tested by Name : Bo-Ram Lee (Signature)	Technical Manager Name : Young-Soo Kim (Signature)

※ The test results are valid only for the test sample(s) provided by the applicant, and cannot be reproduced in full or in part without the prior written consent of the KOMERI

This document is substitute fro report No KOMERI-0906-13T531

Date of issue : 2016. 03. 25

The President of Korea Marine Equipment Research Institute (Signature)

KOMERI 2020 LEADING

G4B(www.g4b.go.kr)진위확인코드 : muf2jn1x3RU=

TABLE OF CONTENTS

■ GENERAL ····· 3

1 LAND-BASED TEST ····· 4
11 TEST ENVIRONMENT ····· 4
12 TEST STANDARD ····· 4
13 TEST EQUIPMENT ····· 5
14 TEST SET-UP ····· 6
15 TEST PROCEDURE ····· 6
16 TEST SCHEDULE ····· 6
17 TEST RESULT ····· 7

ATTACHMENT I DRAWING ····· 10
ATTACHMENT II. PROCEDURE OF LAND-BASED TEST ····· 11
ATTACHMENT III ORGANISMS DIVERSITY OF THE TEST WATER ····· 12
ATTACHMENT IV. TEST RESULT DETAILS ····· 24

G4B(www.g4b.go.kr)진위확인코드 : mul2|n1x3RU=

GENERAL

■ MANUFACTURER

Company Name : KT MARINE Co., Ltd

Address : Centum IS Tower Rm 1808 #1209, Jaesong-dong, Haewndae-gu Busan

■ TEST SITE

24-20, Noksansandan 335-ro, Gangseo-gu, Busan, Korea

■ ADDITIONAL TEST INFORMATION

Treatment Rated Capacity : 300 m^3/h

Test Rated Capacity : 250 m^3/h

■ TEST SUMMARY

Test Item	Test Standard	Result
Land-based test	The Provisional Regulation for Type Approval of Ballast Water Management System by the Ministry of Oceans and Fisheries (PR No. 2013-56, Annex 4 and Annex 6) and Guidelines for Approval of Ballast Water Management Systems (Res. MEPC 174(58), Annex, PART 2, 2.3, 2.4 & Part 4)	Conformity

G4B(www.g4b.go.kr)진위확인코드 : mul2in1x3RU=

1. LAND-BASED TEST

1.1 TEST ENVIRONMENT

- Temperature min 17.9 ℃, max 28.1 ℃
- Humidity min 46 % RH, max 67 % RH

1.2 TEST STANDARD

- Test standards are 'The Provisional Regulation for Type Approval of Ballast Water Management System' by the Ministry of Oceans and Fisheries (PR No. 2013-56, Annex 4 and Annex 6) and Guidelines for Approval of Ballast Water Management Systems (Res. MEPC 174(58), Annex, PART 2, 2.3, 2.4 & Part 4)

	Test Item	Test Method
◆	Water temperature	APHA Standard Method 2550:2012
◆	pH	APHA Standard Method 4500 H^+ B:2012
◆	ORP	APHA Standard Method 2580:2012
◆	Salinity	APHA Standard Method 2520 B:2012
◆	DO	ASTM Standard Method D888-09 C:2010
◆	Turbidity	APHA Standard Method 2130 B:2012
◆	TSS	Standard Method 2540 D:2005
◆	DOC/POC[1]	ISO 8245:1999
◆	Viable organisms (≥ 50 μm)	Fleming & Coughlan, 1978[2], US EPA 600/R-10/146:2010[3], APHA Standard Method 10200 C:2012[4]
◆	Viable organisms (≥ 10 – 50 μm)	Anja et al., 2005[5], APHA Standard Method 10200 C:2012
◆	Heterotrophic bacteria	APHA Standard Method 9125:2012
◆	Coliform	APHA Standard Method 9222 B:2012
◆	*Escherichia coli*	US EPA 1603:2009
◆	Intestinal Enterococci	US EPA 1600:2009
◆	Toxicogenic *Vibrio cholerae* (O1, O139)	APHA Standard Method 9260 H:2012 and/or API 20E kit (BioMerieux, Inc.)

[1] The test was conducted by Korea Testing & Research Institute (KTR)
[2] Staining with Neutral Red
[3] Touch with the point of a fine dissecting needle
[4] Concentration techniques
[5] Fluorescence staning with 5-CFDA-AM

G4B(www.g4b.go.kr)신뢰확인코드 : mu12n1x3RU=

1.3 TEST EQUIPMENT

Description	Manufacturer	Model Number	Calibration Due
◆ Auto pipette	Labnet International, inc	BP-10000	~ 2013. 12. 01
◆ Auto pipette	Labnet International, inc	BP-1000	~ 2013. 12. 01
◆ Auto pipette	Labnet International, inc	BP-200	~ 2013. 12. 01
◆ Autoclave	DH Sci	WAC-60	~ 2013. 12. 06
◆ Bogorov counting chamber	DH Sci	-	-
◆ Clean bench	SY Sci	SH-150S	-
◆ Colony counter	SUNTEX	570	-
◆ Digital imaging	BAUMER	TDI DMC3	-
◆ Digital imaging	Olympus	JUJAK 5.5	-
◆ Drying and heating oven	DH Sci	WON-105	~ 2013. 12. 06
◆ Electronic balance	OHAUS	Pioneer™ Balances	~ 2013. 12. 06
◆ Filtration system	Nalgene	350 mL	-
◆ Fluorescent microscope	Olympus	CFX41-33FL	-
◆ Humidity Recorder	CENTER	342	~ 2013. 08. 17
◆ Incubators	DH Sci	WIG-155	~ 2013. 12. 06
◆ Mass cylinder	Witeg	100 mL	~ 2015. 06. 04
◆ Micro (Pasteur) pipette	Hilgenberg	31 501 02	-
◆ Multiprobe (Hydrolab)	Hach company	Hydrolab MS5	
◆ Plankton net	SA Sci	conical type 30 μm	-
◆ Plankton net	SA Sci	conical type 7 ~ 8 μm	-
◆ Sedgewick-Rafter chamber	Pyser-SGI	-	-
◆ Standard sieve	Sefar	30 μm	~ 2013. 11. 19
◆ Standard sieve	Sefar	7 ~ 8 μm	-
◆ Stereo-microscope	Olympus	SZ40	-
◆ Turbidity meter	Hach company	2100 P	-
◆ Vacuum pump	THOMAS	1617-353 series	-

G4B(www.g4b.go.kr)진위확인코드 : mut2in1x3RU=

1.4 TEST SET-UP

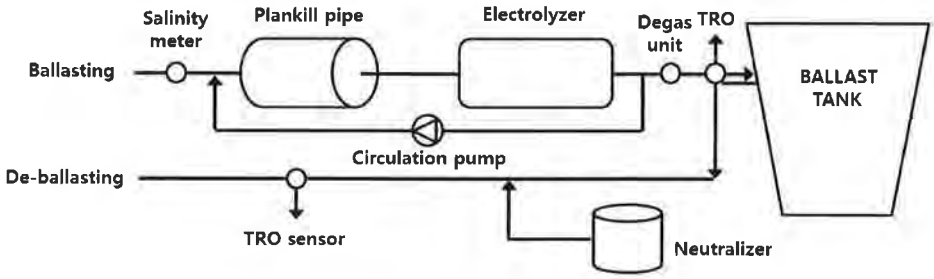

Figure 1-1 Test flow diagram of the MARINOMATE

1.5 TEST PROCEDURE

·See Attachment II PROCEDURES OF LAND-BASED TEST

1.6 TEST SCHEDULE

Period	Cycle	Test mode and date		Location
		Ballasting	de-Ballasting	
1 (> 32 PSU)	1	2013. 05. 30	2013. 06. 04	KIOST, Geoje (34°59'31.00"N, 128°40'23.39"E)
	2	2013. 06. 06	2013. 06. 11	
	3	2013. 06. 13	2013. 06. 18	
	4	2013. 06. 20	2013. 06. 25	
	5	2013. 07. 04	2013. 07. 09	
	11	2013. 08. 22	2013. 08. 27	
2 (3 - 32 PSU)	6	2013. 07. 11	2013. 07. 16	
	7	2013. 07. 18	2013. 07. 23	
	8	2013. 07. 25	2013. 07. 30	
	9	2013. 08. 08	2013. 08. 13	
	10	2013. 08. 15	2013. 08. 20	
	12	2013. 08. 29	2013. 09. 03	

G4B(www.g4b.go.kr)진위확인코드 : muf2jn1x3RU=

1.7 TEST RESULTS

1.7.1 Assessment of valid test

(1) Basic water parameters of test (challenge) water

Period	Cycle	Salinity (PSU)	TSS (mg/L)	DOC (mg/L)	POC (mg/L)	Remarks
1 (> 32 PSU)	1	32.76[1] ± 0.22[2]	24.9 ± 3.70	3.28 ± 0.11	2.30 ± 0.05	Conformity
	2	33.05 ± 0.06	25.4 ± 2.71	3.51 ± 0.35	2.15 ± 0.26	Conformity
	3	32.74 ± 0.14	26.3 ± 4.27	3.66 ± 0.07	2.08 ± 0.39	Conformity
	4	33.12 ± 0.14	22.1 ± 3.44	3.59 ± 0.14	2.55 ± 0.38	Conformity
	5	33.66 ± 0.08	27.6 ± 5.43	3.45 ± 0.11	2.35 ± 0.31	Conformity
	11	34.57 ± 0.14	20.7 ± 3.02	3.87 ± 0.05	2.07 ± 0.41	Conformity
Valid requirement		> 32	> 1	> 1	> 1	-
2 (3 - 32 PSU)	6	20.88 ± 0.03	65.8 ± 3.20	7.54 ± 0.07	13.8 ± 0.79	Conformity
	7	20.86 ± 0.06	62.9 ± 2.38	7.35 ± 0.02	8.04 ± 2.18	Conformity
	8	21.20 ± 0.12	60.9 ± 1.47	7.25 ± 0.18	13.3 ± 1.55	Conformity
	9	21.34 ± 0.03	53.6 ± 2.72	6.92 ± 0.09	12.5 ± 0.44	Conformity
	10	21.49 ± 0.25	63.8 ± 1.31	8.20 ± 0.37	13.9 ± 0.11	Conformity
	12	21.28 ± 0.04	60.6 ± 2.14	7.99 ± 0.03	10.7 ± 1.62	Conformity
Valid requirement		3 - 32	> 50	> 5	> 5	-

[1] Data indicates an arithmetic mean from 3 time analysis of beginning, middle, and end sample, respectively
[2] Standard Deviation

(2) Viable organisms of test (challenge) water

Period	Cycle	≥ 50 μm organisms (inds./m³)	≥ 10 - 50 μm organisms (inds./mL)	Heterotrophic bacteria (CFU/mL)	Remarks
1 (> 32 PSU)	1	267 667[1] ± 12 470[2]	1 427 ± 210	16 178 ± 2 132	Conformity
	2	177 389 ± 16 933	1 357 ± 160	12 389 ± 1 816	Conformity
	3	176 334 ± 31 754	1 318 ± 154	2 889 ± 1 395	Invalid
	4	156 278 ± 17 722	1 246 ± 216	10 156 ± 1 032	Conformity
	5	440 000 ± 66 639	1 164 ± 78	11 689 ±1 880	Conformity
	11	181 223 ± 28 874	1 050 ± 129	16 356 ± 1 947	Conformity
2 (3 - 32 PSU)	6	118 445 ± 10 159	1 157 ± 266	16 556 ± 3 104	Conformity
	7	221 112 ± 22 970	1 095 ± 176	12 623 ± 3 979	Conformity
	8	295 112 ± 23 406	1 028 ± 140	23 356 ± 4 577	Conformity
	9	261 223 ± 17 655	1 275 ± 120	10 512 ± 372	Conformity
	10	232 445 ± 13 135	1 119 ± 87	11 267 ± 1 110	Conformity
	12	189 112 ± 16 856	1 086 ± 82	16 067 ± 1 476	Conformity
Valid requirement		≥ 100 000	≥ 1 000	≥ 10 000	-

[1] Data indicates an arithmetic mean from 3 time analysis of beginning, middle, and end sample, respectively
[2] Standard Deviation

G4B(www.g4b.go.kr)진위확인코드 : mul2jn1x3RU=

(3) Organisms diversity of test (challenge) water

Period	Cycle	≥ 50 μm organisms	≥ 10 - 50 μm organisms	Remarks
1 (〉 32 PSU)	1	4 Phyla/Division 13 species	3 Phyla/Division 13 species	Conformity
	2	5 Phyla/Division 16 species	3 Phyla/Division 11 species	Conformity
	3	4 Phyla/Division 13 species	3 Phyla/Division 19 species	Conformity
	4	3 Phyla/Division 12 species	3 Phyla/Division 12 species	Conformity
	5	3 Phyla/Division 11 species	4 Phyla/Division 19 species	Conformity
	11	3 Phyla/Division 17 species	4 Phyla/Division 15 species	Conformity
2 (3 - 32 PSU)	6	3 Phyla/Division 13 species	4 Phyla/Division 19 species	Conformity
	7	4 Phyla/Division 12 species	4 Phyla/Division 8 species	Conformity
	8	3 Phyla/Division 13 species	3 Phyla/Division 8 species	Conformity
	9	4 Phyla/Division 14 species	4 Phyla/Division 8 species	Conformity
	10	4 Phyla/Division 13 species	3 Phyla/Division 6 species	Conformity
	12	4 Phyla/Division 13 species	4 Phyla/Division 7 species	Conformity
Valid requirement		≥ 3 Phyla/Division 5 species	≥ 3 Phyla/Division 5 species	-

(4) Viable organisms of discharge control water

Period	Cycle	≥ 50 μm organisms (inds./m^3)	≥ 10 - 50 μm organisms (inds./mL)	비고
1 (〉 32 PSU)	1	1 723[1] ± 363[2]	440 ± 102	Conformity
	2	1 945 ± 1 184	374 ± 72	Conformity
	3	2 556 ± 1 550	302 ± 44	Conformity
	4	7 167 ± 1 750	445 ± 60	Conformity
	5	18 945 ± 3 539	270 ± 56	Conformity
	11	2 167 ± 707	129 ± 15	Conformity
2 (3 - 32 PSU)	6	723 ± 507	453 ± 63	Conformity
	7	22 056 ± 3 609	539 ± 184	Conformity
	8	278 ± 264	428 ± 155	Conformity
	9	167 ± 125	186 ± 24	Conformity
	10	389 ± 220	208 ± 42	Conformity
	12	389 ± 220	118 ± 29	Conformity
Valid requirement		〉 100	〉 100	-

[1] Data indicates an arithmetic mean from 3 time analysis of beginning, middle and end sample respectively
[2] Standard Deviation

G4B(www.g4b.go.kr)진위확인코드 : muf2|n1x3RU=

1.7.2 Assessment of discharge treated water

Period	Cycle	≥ 50 μm organisms (inds./m³)	≥ 10-50 μm organisms (inds./mL)	Bacteria (CFU/100 mL)			Remarks
				Escherichia coli	Intestinal Enterococci	Toxicogenic *Vibrio cholerae* (O1, O139)	
1 (> 32 PSU)	1	0[1] ± 0[2]	0 ± 0	0 ± 0	0 ± 0	0 ± 0	Conformity
	2	0 ± 0	0 ± 0	0 ± 0	1 ± 0	0 ± 0	Conformity
	3	1 ± 1	1 ± 0	0 ± 0	0 ± 0	0 ± 0	Conformity
	4	0 ± 0	1 ± 0	0 ± 0	1 ± 0	0 ± 0	Conformity
	5	0 ± 0	1 ± 0	0 ± 0	1 ± 0	0 ± 0	Conformity
	11	0 ± 0	1 ± 0	0 ± 0	13 ± 10	0 ± 0	Conformity
2 (3 - 32 PSU)	6	0 ± 0	0 ± 0	0 ± 0	19 ± 26	0 ± 0	Conformity
	7	0 ± 0	0 ± 0	0 ± 0	1 ± 1	0 ± 0	Conformity
	8	1 ± 1	0 ± 0	0 ± 0	28 ± 16	0 ± 0	Conformity
	9	2 ± 1	0 ± 0	0 ± 0	55 ± 29	0 ± 0	Conformity
	10	1 ± 1	0 ± 0	0 ± 0	TNTC[3]	0 ± 0	Invalid[4]
	12	2 ± 1	0 ± 0	2 ± 2	75 ± 31	0 ± 0	Conformity
Discharge standard		< 10	< 10	< 250	< 100	< 1	-

[1] Data indicates an arithmetic mean from 3 time analysis of beginning, middle and end sample, respectively
[2] Standard Deviation
[3] Too Numerous To Count
[4] Test result of 10th test cycle was invalidated as we can not conclude that the outcome of intestinal enterococci in discharge water was not affected by contamination of test facility pipes with intestinal enterococci due to incomplete cleaning

- The end -

G4B(www.g4b.go.kr)진위확인코드 : mul2jn1x3RU=

ATTACHMENT

I. DRAWING

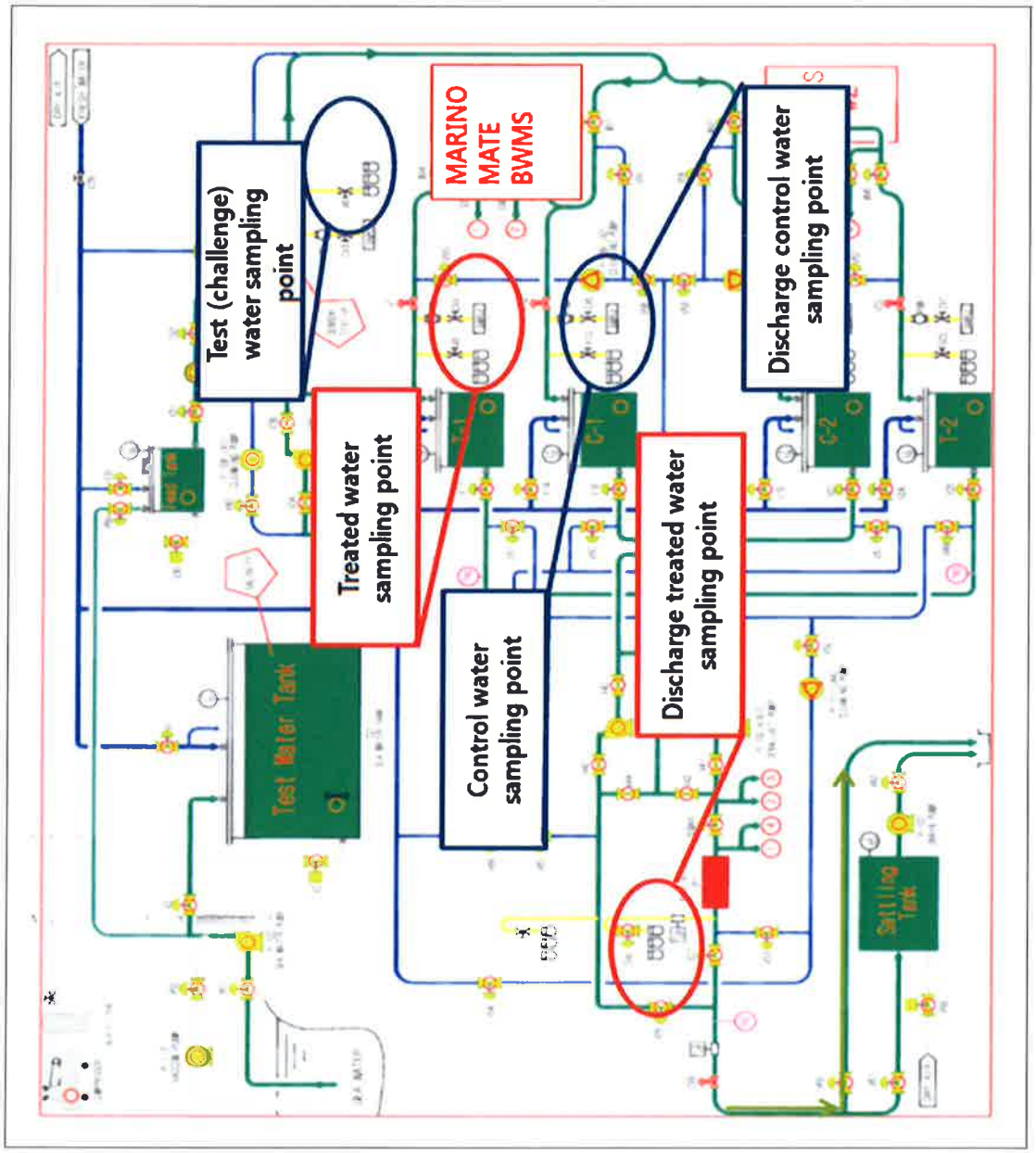

G4B(www.g4b.go.kr)진위확인코드 : muf2jn1x3RU=

II. PROCEDURE OF LAND-BASED TEST

KOMERI SOP BWMS 01
Rev. 3.0 May 2011

BWMS Test Procedures of Land-Based Test

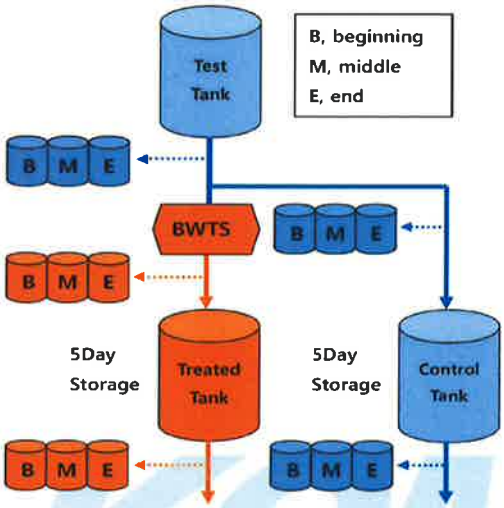

<Standard for valid test>

Salinity in the test water			
	> 32 PSU	3-32 PSU	< 3 PSU
DOC	> 1 mg/L	> 5 mg/L	> 5 mg/L
POC	> 1 mg/L	> 5 mg/L	> 5 mg/L
TSS	> 1 mg/L	> 50 mg/L	> 50 mg/L

Density of organisms in the test water	
≥ 50 μm organisms	≥ 3 Phyla/Division 5 species ≥ 100,000 inds./m³
≥ 10-50 μm organisms	≥ 3 Phyla/Division 5 species ≥ 1,000 inds./mL
Heterotrophic bacteria	≥ 10,000 cells/mL

Density of organisms in the treated water		
≥ 50 μm organisms		< 10 inds./m³
≥ 10-50 μm organisms		< 10 inds./mL
Bacteria	Toxicogenic *Vibrio cholerae* (O1, O139)	< 1 cfu/100 mL
	Escherichia coil	< 250 cfu/100mL
	Intestinal Enterococci	< 100 cfu/100mL

Sample volume			
Ballasting	Test water	≥ 50 μm organisms	20 L
		≥ 10-50 μm organisms	1 L
		Bacteria	1 L
	Control water	≥ 50 μm organisms	20 L
		≥ 10-50 μm organisms	1 L
		Bacteria	1 L
	Treated water	≥ 50 μm organisms	1 m³
		≥ 10-50 μm organisms	10 L
		Bacteria	2 L
de-Ballasting	Control water	≥ 50 μm organisms	20 L
		≥ 10-50 μm organisms	1 L
		Bacteria	1 L
	Treated water	≥ 50 μm organisms	1 m³
		≥ 10-50 μm organisms	10 L
		Bacteria	2 L

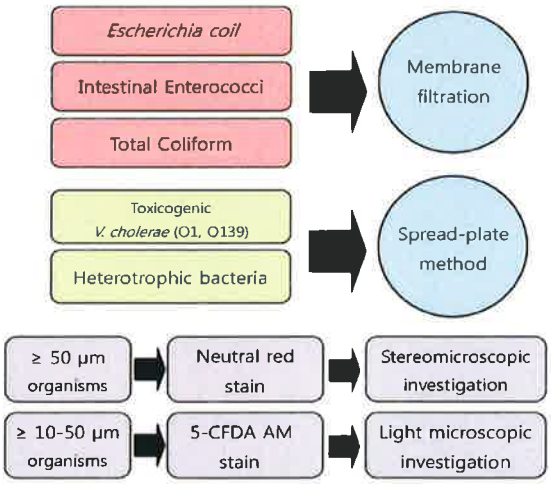

G4B(www.g4b.go.kr)진위확인코드 : muf2jn1x3RU=

III. ORGANISMS DIVERSITY OF THE TEST WATER

- **Ballasting (1st cycle : 2013. 05. 30)**

≥ 50 μm organisms

Phylum	Order	Genus/Species
Rotifera	Ploimaida	*Brachionus plicatilis*
Arthropoda	Anostraca	*Artemia salina*
	Calanoida	*Acartia omorii*
	Cladocera	*Podon* sp
	Cyclopoida	*Oithona* sp
		Oncaea sp
	Harpacticoida	-
	Sessilia	Balanus larva
	Copepod nauplius	-
	Calanoida copepodite	-
	Cyclopoida copepodite	-
Annelida	Polychaeta larva	-
Mollusca	Gastropod larva	-

≥ 10 - 50 μm organisms

Phylum	Order	Genus/Species
Bacillariophyta	Thalassiosirales	*Thalassiosira rotula*
	Chaetocerotales	*Chaetoceros* sp
	Naviculales	*Pleurosigma* sp
Dinophyta	Prorocentrales	*Prorocentrum* sp
	Gymnodiniales	*Amphidinium* sp
		Askashiwo sanguinea
		Gyrodinium sp
	Dinophysiales	*Oxyphysis* sp
	Peridiniales	*Ceratium fusus*
		Ceratium furca
		Scrippsiella sp
		Protoperidinium sp
Chlorophyta	Chlorodendrales	*Tetraselmis suecica*

G4B(www.g4b.go.kr)진위확인코드 : muf2jn1x3RU=

III. TO BE CONTINUED

- Ballasting (2nd cycle : 2013. 06. 06)

≥ 50 μm organisms

Phylum	Order	Genus/Species
Rotifera	Ploimaida	*Brachionus plicatilis*
Protozoa	Tintinnida	*Tintinnopsis* sp
Arthropoda	Anostraca	*Artemia salina*
	Calanoida	*Acartia omorii*
	Cladocera	*Podon* sp
	Cyclopoida	*Oithona* sp
	Poecilostomatoida	*Corycaeus affinis*
	Harpacticoida	-
	Sessilia	Balanus larva
		Cyprid larva
	Copepod nauplius	-
	Calanoida copepodite	-
	Cyclopoida copepodite	-
Annelida	Polychaeta larva	-
Mollusca	Gastropod larva	-
	Bivalve larva	-

≥ 10 - 50 μm organisms

Phylum	Order	Genus/Species
Bacillariophyta	Thalassiosirales	*Thalassiosira rotula*
	Chaetocerotales	*Chaetoceros* sp
Dinophyta	Prorocentrales	*Prorocentrum* sp
	Dinophysiales	*Dinophysis* sp
	Gymnodiniales	*Amphidinium* sp
		Askashiwo sanguinea
		Gyrodinium sp
	Peridiniales	*Ceratium fusus*
		Ceratium furca
		Protoperidinium sp
Chlorophyta	Chlorodendrales	*Tetraselmis suecica*

G4B(www.g4b.go.kr)진위확인코드 : mul2jn1x3RU=

III. TO BE CONTINUED

- **Ballasting (3rd cycle : 2013. 06. 13)**

≥ 50 μm organisms

Phylum	Order	Genus/Species
Rotifera	Ploimaida	*Brachionus plicatilis*
Arthropoda	Anostraca	*Artemia salina*
	Calanoida	*Acartia omorii*
	Cladocera	*Podon* sp
	Cyclopoida	*Oithona* sp
	Poecilostomatoida	*Corycaeus affinis*
	Harpacticoida	-
	Sessilia	Balanus larva
	Copepod nauplius	-
	Calanoida copepodite	-
	Cyclopoida copepodite	-
Annelida	Polychaeta larva	-
Mollusca	Bivalve larva	-

≥ 10 - 50 μm organisms

Phylum	Order	Genus/Species
Baciliariophyta	Chaetocerotales	*Chaetoceros* sp
	Thalassiosirales	*Thalassiosira* sp
	Coscinodiscales	*Coscinodiscus* sp
	Dictyochales	*Dictyocha* sp
	Rhizosoleniales	*Rhizosolenia* sp
		Guinardia sp
	Lithodesmidales	*Ditylum brightwellii*
	Naviculales	*Navicula* sp
		Pinnularia sp
Dinophyta	Prorocetrales	*Prorocentrum* sp
	Gymnodiniales	*Amphidinium* sp
		Gyrodinium sp
		Askashiwo sanguinea
	Peridiniales	*Ceratium furca*
		Ceratium fusus
		Scrippsiella sp
		Protoperidinium sp
Chlorophyta	Chlorodendrales	*Tetraselmis suecica*
Unidentified species		

G4B(www.g4b.go.kr)진위확인코드 : mul2jn1x3RU=

III. TO BE CONTINUED

- **Ballasting (4th cycle : 2013. 06. 20)**

≥ 50 μm organisms

Phylum	Order	Genus/Species
Arthropoda	Anostraca	*Artemia salina*
	Calanoida	*Acartia omorii*
	Cyclopoida	*Oithona* sp
	Poecilostomatoida	*Corycaeus affinis*
	Sessilia	Balanus larva
	Harpacticoida	-
	Copepod nauplius	-
	Calanoida copepodite	-
	Cyclopoida copepodite	-
Annelida	Polychaeta larva	-
Mollusca	Gastropod larva	-
	Bivalve larva	-

≥ 10 - 50 μm organisms

Phylum	Order	Genus/Species
Bacillariophyta	Thalassiosirales	*Thalassiosira rotula*
	Chaetocerotales	*Chaetoceros* sp
	Naviculales	*Navicula* sp
Dinophyta	Prorocentrales	*Prorocentrum* sp
	Gymnodiniales	*Amphidinium* sp
		Katodinium sp
		Gyrodinium sp
	Peridiniales	*Ceratium fusus*
		Ceratium furca
		Protoperidinium sp
Chlorophyta	Chlorodendrales	*Tetraselmis suecica*
Unidentified Species		

G4B(www.g4b.go.kr)진위확인코드 : muf2jn1x3RU=

III. TO BE CONTINUED

- **Ballasting (5th cycle : 2013. 07. 04)**

≥ 50 μm organisms

Phylum	Order	Genus/Species
Arthropoda	Anostraca	*Artemia salina*
	Calanoida	*Paracalanus* sp
	Cyclopoida	*Oithona* sp
	Poecilostomatoida	*Corycaeus affinis*
	Sessilia	Balanus larva
	Copepod nauplius	-
	Calanoida copepodite	-
	Cyclopoida copepodite	-
Annelida	Polychaeta larva	-
Mollusca	Gastropod larva	-
	Bivalve larva	-

≥ 10 - 50 μm organisms

Phylum	Order	Genus/Species
Bacillariophyta	Thalassiosirales	*Thalassiosira rotula*
	Chaetocerotales	*Chaetoceros* sp
	Rhizosoleniales	*Rhizosolenia* sp
		Guinardia sp
	Hemiaulales	*Eucampia* sp
		Hemiaulus sp
	Dictyochales	*Dictyocha* sp
Dinophyta	Prorocentrales	*Prorocentrum* sp
	Gymnodiniales	*Amphidinium* sp
		Gymnodinium sp
		Gyrodinium sp
	Peridiniales	*Ceratium fusus*
		Ceratium furca
		Scrippsiella sp
		Protoperidinium sp
Chlorophyta	Chlorodendrales	*Tetraselmis suecica*
Protozoa	Tintinnida	*Tintinnopsis* sp
Unidentified Species (2 spp)		

G4B(www.g4b.go.kr)진위확인코드 : mul2jn1x3RU=

III. TO BE CONTINUED

- Ballasting (6th cycle : 2013. 07. 11)

≥ 50 μm organisms

Phylum	Order	Genus/Species
Arthropoda	Anostraca	*Artemia salina*
	Calanoida	*Acartia omorii*
	Cladocera	*Podon* sp.
		Evadne sp.
	Cyclopoida	*Oithona* sp.
	Harpacticoida	-
	Sessilia	Balanus larva
	Copepod nauplius	-
	Calanoida copepodite	-
	Cyclopoida copepodite	-
Annelida	Polychaeta larva	-
Mollusca	Gastropod larva	-
	Bivalve larva	-

≥ 10 - 50 μm organisms

Phylum	Order	Genus/Species
Bacillariophyta	Thalassiosirales	*Thalassiosira rotula*
	Chaetocerotales	*Chaetoceros* sp.
	Coscinodiscales	*Coscinodiscus* sp.
	Rhizosoleniales	*Rhizosolenia* sp.
	Hemiaulales	*Eucampia* sp.
	Lithodesmidales	*Ditylum brighwellii*
	Dictyochales	*Dictyocha* sp.
Dinophyta	Prorocentrales	*Prorocentrum* sp.
	Gymnodiniales	*Amphidinium* sp.
		Gyrodinium sp.
	Peridiniales	*Ceratium fusus*
		Ceratium furca
		Ceratium kofoidii
		Gonyaulax sp.
		Scrippsiella sp.
		Heterocapsa sp.
		Protoperidinium sp.
Chlorophyta	Chlorodendrales	*Tetraselmis suecica*
Protozoa		

G4B(www.g4b.go.kr)진위확인코드 : mul2jn1x3RU=

III. TO BE CONTINUED

- **Ballasting (7th cycle : 2013. 07. 18)**

≥ 50 μm organisms

Phylum	Order	Genus/Species
Rotifera	Ploimaida	*Brachionus plicatilis*
Arthropoda	Anostraca	*Artemia salina*
	Calanoida	*Acartia omorii*
		Paracalanus sp
	Cladocera	*Podon* sp
	Cyclopoida	*Oithona* sp
	Copepod nauplius	-
	Calanoida copepodite	-
	Cyclopoida copepodite	-
Annelida	Polychaeta larva	-
Mollusca	Bivalve larva	-
	Gastropod larva	-

≥ 10 - 50 μm organisms

Phylum	Order	Genus/Species
Bacillariophyta	Chaetocerotales	*Chaetoceros* sp
	Rhizosoleniales	*Guinardia* sp
	Dictyochales	*Dictyocha* sp
Dinophyta	Oxyrrhinales	*Oxyrrhis* sp
	Gymnodiniales	*Amphidinium* sp
Chlorophyta	Chlorodendrales	*Tetraselmis suecica*
	Chlorococcales	*Brachiomonas* sp
Protozoa	Tintinnida	*Tintinnopsis* sp

G4B(www.g4b.go.kr)진위확인코드 : mul2|n1x3RU=

III. TO BE CONTINUED

- **Ballasting (8th cycle : 2013. 07. 25)**

≥ 50 μm organisms

Phylum	Order	Genus/Species
Arthropoda	Anostraca	*Artemia salina*
	Calanoida	*Acartia omorii*
	Cladocera	*Podon* sp
		Evadne sp
	Cyclopoida	*Oithona* sp
	Harpacticoida	-
	Sessilia	Cyprid larva
	Copepod nauplius	-
	Calanoida copepodite	-
	Cyclopoida copepodite	-
Annelida	Polychaeta larva	-
Mollusca	Gastropod larva	-
	Bivalve larva	-

≥ 10 - 50 μm organisms

Phylum	Order	Genus/Species
Bacillariophyta	Thalassiosirales	*Thalassiosira rotula*
	Melosirales	*Stephanopyxis turris*
	Rhizosoleniales	*Rhizosolenia* sp
	Chaetocerotales	*Chaetoceros* sp
Dinophyta	Gymnodiniales	*Amphidinium* sp
		Scrippsiella sp
		Protoperidinium sp
Chlorophyta	Chlorodendrales	*Tetraselmis suecica*

G4B(www.g4b.go.kr)진위확인코드 : mul2|n1x3RU=

III. TO BE CONTINUED

- **Ballasting (9th cycle : 2013. 08. 08)**

≥ 50 μm organisms

Phylum	Order	Genus/Species
Rotifera	Ploimaida	*Brachionus plicatilis*
Arthropoda	Anostraca	*Artemia salina*
	Calanoida	*Paracalanus* sp.
	Cyclopoida	*Oithona* sp.
	Harpacticoida	-
	Sessilia	Balanus larva
		Cyprid larva
	Decapoda	-
	Copepod nauplius	-
	Calanoida copepodite	-
	Cyclopoida copepodite	-
Annelida	Polychaeta larva	-
Mollusca	Bivalve larva	-
	Gastropod larva	-

≥ 10 - 50 μm organisms

Phylum	Order	Genus/Species
Bacillariophyta	Chaetocerotales	*Chaetoceros* sp.
	Naviculales	*Pleurosigma* sp.
Dinophyta	Gymnodiniales	*Amphidinium* sp.
		Cochlodinium polykrikoides
		Cetatium furca
		Cetatium fusus
Chlorophyta	Chlorodendrales	*Tetraselmis suecica*
Protozoa		

G4B(www.g4b.go.kr)진위확인코드 : mul2jn1x3RU=

III. TO BE CONTINUED

- **Ballasting (10th cycle : 2013. 08. 15)**

≥ 50 μm organisms

Phylum	Order	Genus/Species
Rotifera	Ploimaida	*Brachionus plicatilis*
Arthropoda	Anostraca	*Artemia salina*
	Cladocera	*Podon* sp.
	Cyclopoida	*Oithona* sp.
	Harpacticoida	-
	Sessilia	Balanus larva
		Cyprid larva
	Copepod nauplius	-
	Calanoida copepodite	-
	Cyclopoida copepodite	-
Annelida	Polychaeta larva	-
Mollusca	Bivalve larva	-
	Gastropod larva	-

≥ 10 - 50 μm organisms

Phylum	Order	Genus/Species
Baciliariophyta	Chaetocerotales	*Chaetoceros* sp.
	Naviculales	*Navicula* sp.
Dinophyta	Gymnodiniales	*Amphidinium* sp.
		Ceratium furca
		Ceratium fusus
Chlorophyta	Chlorodendrales	*Tetraselmis* sp.

G4B(www.g4b.go.kr)진위확인코드 : muf2)nIx3RU=

III. TO BE CONTINUED

- **Ballasting (11th cycle : 2013. 08. 22)**

≥ 50 μm organisms

Phylum	Order	Genus/Species
Arthropoda	Anostraca	*Artemia salina*
	Calanoida	*Acartia omorii*
		Acartia pacifica
		Paracalanus sp
	Cladocera	*Podon* sp
	Cyclopoida	*Oithona* sp
		Oncaea sp
	Poecilostomatoida	*Corycaeus affinis*
	Harpacticoida	-
	Sessilia	Balanus larva
		Cyprid larva
	Copepod nauplius	-
	Calanoida copepodite	-
	Cyclopoida copepodite	-
Annelida	Polychaeta larva	-
Mollusca	Gastropod larva	-
	Bivalve larva	-

≥ 10 - 50 μm organisms

Phylum	Order	Genus/Species
Bacillariophyta	Thalassiosirales	*Thalassiosira rotula*
	Chaetocerotales	*Chaetoceros* sp
	Hemiaulales	*Eucampia* sp
	Lithodesmidales	*Ditylum brightwellii*
	Naviculales	*Pleurosigma* sp
	Dictyochales	*Dictyocha* sp
Dinophyta	Gymnodiniales	*Amphidinium* sp
		Gyrodinium sp
		Cetatium furca
		Cetatium fusus
		Scrippsiella sp
		Protoperidinium sp
Chlorophyta	Chlorodendrales	*Tetraselmis suecica*
Protozoa		
Protozoa	Tintinnida	*Tintinnopsis* sp

G4B(www.g4b.go.kr)진위확인코드 : muf2jnlx3RU=

III. TO BE CONTINUED

- **Ballasting (12th cycle : 2013. 08. 29)**

≥ 50 μm organisms

Phylum	Order	Genus/Species
Rotifera	Ploimaida	*Brachionus plicatilis*
Arthropoda	Anostraca	*Artemia salina*
	Cyclopoida	*Oithona* sp
	Poecilostomatoida	*Corycaeus affinis*
	Harpacticoida	-
	Sessilia	Balanus larva
		Cyprid larva
	Copepod nauplius	-
	Calanoida copepodite	-
	Cyclopoida copepodite	-
Annelida	Polychaeta larva	-
Mollusca	Bivalve larva	-
	Gastropod larva	-

≥ 10 - 50 μm organisms

Phylum	Order	Genus/Species
Bacillariophyta	Chaetocerotales	*Chaetoceros* spp
Dinophyta	Gymnodiniales	*Gyrodinium* sp
		Scrippsiella sp
		Protoperidinium sp
Chlorophyta	Chlorodendrales	*Tetraselmis suecica*
Protozoa		
Unidentified Species		

G4B(www.g4b.go.kr)진위확인코드 : mul2jn1x3RU=

IV. TEST RESULT DETAILS

- **Ballasting (1st cycle : 2013. 05. 30)** – Basic water parameter

Test Item	Test water			Control water			Treated water		
	B	M	E	B	M	E	B	M	E
Water temperature (℃)	20.66	19.53	19.79	20.84	19.34	19.55	20.00	19.34	19.84
	20.87	19.53	19.48	20.85	19.33	20.10	19.82	19.37	20.03
	20.73	19.55	19.49	20.63	19.34	20.43	19.89	19.36	19.71
Average	20.75	19.54	19.59	20.77	19.34	20.03	19.90	19.36	19.86
Standard deviation	0.11	0.01	0.18	0.12	0.01	0.44	0.09	0.02	0.16
pH	7.85	7.83	7.75	7.93	7.84	7.83	7.68	7.35	7.58
	7.88	7.84	7.79	7.83	7.76	7.87	7.61	7.37	7.55
	7.85	7.95	7.97	7.71	7.83	7.82	7.54	7.46	7.68
Average	7.86	7.87	7.84	7.82	7.81	7.84	7.61	7.39	7.60
Standard deviation	0.02	0.07	0.12	0.11	0.04	0.03	0.07	0.06	0.07
ORP (mV)	288	447	553	222	428	624	661	704	713
	263	442	544	206	410	441	674	714	719
	241	436	529	202	408	410	684	717	721
Average	264	442	542	210	415	492	673	712	718
Standard deviation	24	6	12	11	11	116	12	7	4
Salinity (PSU)	32.46	32.93	32.71	32.51	33.02	33.04	32.11	33.04	33.01
	32.47	32.99	32.84	32.94	33.02	32.37	32.48	33.06	32.95
	32.52	33.00	32.88	31.59	33.01	31.76	32.64	33.06	33.11
Average	32.48	32.97	32.81	32.35	33.02	32.39	32.41	33.05	33.02
Standard deviation	0.03	0.04	0.09	0.69	0.01	0.64	0.27	0.01	0.08
DO (mg/L)	7.44	7.56	7.47	7.48	7.55	7.52	7.53	7.51	7.59
	7.43	7.57	7.55	7.52	7.57	7.51	7.55	7.54	7.48
	7.41	7.51	7.56	7.48	7.58	7.52	7.56	7.52	7.54
Average	7.43	7.55	7.53	7.49	7.57	7.52	7.55	7.52	7.54
Standard deviation	0.02	0.03	0.05	0.02	0.02	0.01	0.02	0.02	0.06
Turbidity (NTU)	6.19	5.09	4.72	8.68	4.30	4.85	7.70	6.92	5.42
	6.61	4.65	5.33	6.85	4.85	5.62	6.58	5.30	6.26
	7.54	5.34	4.78	6.20	4.82	6.30	6.00	4.36	4.99
Average	6.78	5.03	4.94	7.24	4.66	5.59	6.76	5.53	5.56
Standard deviation	0.69	0.35	0.34	1.29	0.31	0.73	0.86	1.29	0.65
TSS (mg/L)	24.8	23.2	22.0	27.2	18.4	26.0	17.6	22.4	16.0
	26.4	22.8	24.8	24.8	23.2	22.0	16.0	21.2	18.4
	34.0	22.0	24.4	24.4	23.2	22.8	24.4	20.4	21.6
Average	28.4	22.7	23.7	25.5	21.6	23.6	19.3	21.3	18.7
Standard deviation	4.92	0.61	1.51	1.51	2.77	2.12	4.46	1.01	2.81
DOC (mg/L)	3.16	3.32	3.36	3.35	3.10	2.77	3.66	3.17	3.10
TOC (mg/L)	2.33	2.33	2.24	2.09	2.16	2.27	1.74	2.06	2.45

KOMERI 2020 LEADING
G4B(www.g4b.go.kr)진위확인코드 : mul2jn1x3RU=

IV. TO BE CONTINUED

- **Ballasting (1st cycle : 2013. 05. 30)** - Viable organisms

Test Item	Test water			Control water			Treated water		
	B	M	E	B	M	E	B	M	E
≥ 50 μm (inds/m³)	276 000	281 000	260 000	240 000	241 000	270 500	15 300	15 800	19 000
	259 500	269 500	278 500	249 000	229 000	257 000	16 450	17 100	20 200
	249 500	282 000	253 000	276 500	232 000	264 500	17 350	13 800	16 750
Average	261 667	277 500	263 834	255 167	234 000	264 000	16 367	15 567	18 650
Standard deviation	10 927	5 672	10 757	15 526	5 099	5 523	839	1 357	1 430
≥ 10 - 50 μm (inds/mL)	1 515	1 170	1 677	1 350	1 078	1 371	0	0	1
	1 712	1 191	1 372	1 531	963	1 425	0	0	0
	1 512	1 178	1 512	1 328	943	1 319	0	0	1
Average	1 580	1 180	1 521	1 403	995	1 372	0	0	1
Standard deviation	115	11	153	111	73	53	0	0	1

- **Ballasting (1st cycle : 2013. 05. 30)** - Bacteria

Test Item	Test water			Control water			Treated water		
	B	M	E	B	M	E	B	M	E
Heterotrophic bacteria (CFU/mL)	16 000	16 100	15 200	12 900	10 100	12 200	0	10	0
	15 900	13 800	17 000	12 600	13 100	10 700	0	0	0
	21 300	15 700	14 600	15 300	13 600	11 200	0	0	0
Average	17 734	15 200	15 600	13 600	12 267	11 367	0	4	0
Standard deviation	3 089	1 229	1 249	1 480	1 893	764	0	6	0
Coliform (CFU/100 mL)	50	20	20	30	10	10	0	0	0
	20	0	20	20	0	0	0	0	0
	30	0	30	10	0	0	0	0	0
Average	34	7	24	20	4	4	0	0	0
Standard deviation	15	12	6	10	6	6	0	0	0
Escherichia coli (CFU/100 mL)	10	10	10	10	10	10	0	0	0
	0	0	20	0	0	0	0	0	0
	0	0	0	0	0	0	0	0	0
Average	4	4	10	4	4	4	0	0	0
Standard deviation	6	6	10	6	6	6	0	0	0
Intestinal Enterococci (CFU/100 mL)	50	50	10	0	10	30	0	0	0
	20	40	20	0	20	10	0	0	0
	0	0	10	30	0	0	0	0	0
Average	24	30	14	10	10	14	0	0	0
Standard deviation	25	26	6	17	10	15	0	0	0
Toxicogenic *Vibrio cholerae* (O1, O139) (CFU/100 mL)	0	0	0	0	0	0	0	0	0
	0	0	0	0	0	0	0	0	0
	0	0	0	0	0	0	0	0	0
Average	0	0	0	0	0	0	0	0	0
Standard deviation	0	0	0	0	0	0	0	0	0

G4B(www.g4b.go.kr)진위확인코드 : muf2jn1x3RU=

IV. TO BE CONTINUED

- **de-Ballasting (1st cycle : 2013. 06. 04)** – Basic water parameter

Test Item	Control water			Treated water		
	B	M	E	B	M	E
Water temperature (℃)	20.96	20.96	20.97	20.66	21.06	20.93
	20.65	20.73	21.56	20.30	20.30	20.25
	20.59	20.85	20.70	20.30	20.57	20.27
Average	20.73	20.85	21.08	20.42	20.64	20.48
Standard deviation	0.20	0.12	0.44	0.21	0.39	0.39
pH	7.44	7.51	7.52	7.48	7.55	7.53
	7.48	7.51	7.51	7.57	7.58	7.55
	7.49	7.51	7.51	7.58	7.62	7.56
Average	7.47	7.51	7.51	7.54	7.58	7.55
Standard deviation	0.03	0.00	0.01	0.06	0.04	0.02
ORP (mV)	257	221	214	340	149	180
	247	220	219	315	154	165
	241	218	216	305	159	153
Average	248	220	216	320	154	166
Standard deviation	8	2	3	18	5	14
Salinity (PSU)	32.29	32.58	32.63	32.54	32.47	32.54
	32.35	32.70	32.64	32.88	32.83	32.81
	32.53	32.68	32.71	32.89	32.67	32.76
Average	32.39	32.65	32.66	32.77	32.66	32.70
Standard deviation	0.12	0.06	0.04	0.20	0.18	0.14
DO (mg/L)	6.93	6.82	6.97	7.47	7.45	7.43
	6.88	6.84	6.99	7.55	7.59	7.55
	6.91	6.85	6.99	7.54	7.53	7.55
Average	6.91	6.84	6.98	7.52	7.52	7.51
Standard deviation	0.03	0.02	0.01	0.04	0.07	0.07
Turbidity (NTU)	4.15	4.70	4.41	4.76	3.96	4.57
	4.05	3.75	4.59	4.51	4.39	4.33
	3.56	4.05	4.03	4.43	4.63	4.28
Average	3.92	4.17	4.34	4.57	4.33	4.39
Standard deviation	0.32	0.49	0.29	0.17	0.34	0.16
TSS (mg/L)	37.0	32.0	29.0	30.0	48.0	36.0
	39.0	42.0	35.0	47.0	32.0	37.0
	51.0	42.0	33.0	45.0	38.0	26.0
Average	42.3	38.7	32.3	40.7	39.3	33.0
Standard deviation	7.57	5.77	3.06	9.29	8.08	6.08
DOC (mg/L)	1.78	1.66	1.75	4.13	3.96	3.95
TOC (mg/L)	0.88	0.97	1.02	1.68	1.88	2.38

G4B(www.g4b.go.kr)진위확인코드 : mul2jn1x3RU=

IV. TO BE CONTINUED

- **de-Ballasting (1st cycle : 2013. 06. 04)** - Viable organisms

Test Item	Control water			Treated water		
	B	M	E	B	M	E
≥ 50 μm (inds/m³)	1 500	2 500	1 500	0*	0	0
	1 500	1 500	1 500			
	2 000	1 500	2 000			
Average	1 667	1 834	1 667			
Standard deviation	289	577	289			
≥ 10 - 50 μm (inds/mL)	576	386	326	0	0	0
	582	308	440	0	0	0
	522	444	370	0	0	0
Average	560	380	379	0	0	0
Standard deviation	33	68	57	0	0	0

* Analysed entire sample volume

- **de-Ballasting (1st cycle : 2013. 06. 04)** - Bacteria

Test Item	Control water			Treated water		
	B	M	E	B	M	E
Heterotrophic bacteria (CFU/mL)	49 600	57 200	18 400	600	450	790
	19 000	11 900	22 000	940	620	700
	11 500	32 400	44 000	820	700	710
Average	26 700	33 834	28 134	787	590	734
Standard deviation	20 183	22 684	13 858	172	128	49
Coliform (CFU/100 mL)	0	0	0	0	0	0
	0	0	0	0	0	0
	0	0	0	0	0	0
Average	0	0	0	0	0	0
Standard deviation	0	0	0	0	0	0
Escherichia coli (CFU/100 mL)	5	0	0	0	0	0
	0	0	0	0	0	0
	0	0	0	0	0	0
Average	2	0	0	0	0	0
Standard deviation	3	0	0	0	0	0
Intestinal Enterococci (CFU/100 mL)	75	15	25	0	0	0
	45	30	25	0	0	0
	55	25	45	0	0	0
Average	59	24	32	0	0	0
Standard deviation	15	8	12	0	0	0
Toxicogenic *Vibrio cholerae* (O1, O139) (CFU/100 mL)	0	0	0	0	0	0
	0	0	0	0	0	0
	0	0	0	0	0	0
Average	0	0	0	0	0	0
Standard deviation	0	0	0	0	0	0

G4B(www.g4b.go.kr)진위확인코드 : muf2jn1x3RU=

IV. TO BE CONTINUED

- **Ballasting (2nd cycle : 2013. 06. 06)** - Basic water parameter

Test Item	Test water			Control water			Treated water		
	B	M	E	B	M	E	B	M	E
Water temperature (℃)	20.03	19.97	20.20	20.03	19.98	20.15	20.38	19.93	20.24
	20.00	19.94	20.07	20.02	20.01	20.15	20.53	19.94	20.23
	20.01	19.95	20.07	20.04	19.98	20.13	20.57	19.99	20.35
Average	20.01	19.95	20.11	20.03	19.99	20.14	20.49	19.95	20.27
Standard deviation	0.02	0.02	0.08	0.01	0.02	0.01	0.10	0.03	0.07
pH	7.85	7.86	7.87	7.92	7.90	7.89	7.69	7.63	7.64
	7.87	7.88	7.89	7.92	7.90	7.90	7.69	7.63	7.65
	7.88	7.88	7.89	7.93	7.91	7.91	7.68	7.62	7.63
Average	7.87	7.87	7.88	7.92	7.90	7.90	7.69	7.63	7.64
Standard deviation	0.02	0.01	0.01	0.01	0.01	0.01	0.01	0.01	0.01
ORP (mV)	290	520	575	260	517	527	731	733	723
	275	525	562	255	509	517	730	740	738
	268	528	554	252	503	506	729	742	743
Average	278	524	564	256	510	517	730	738	735
Standard deviation	11	4	11	4	7	11	1	5	10
Salinity (PSU)	32.97	33.02	33.11	32.78	32.75	32.77	32.71	32.95	32.98
	33.02	33.05	33.09	32.78	32.82	32.78	32.59	32.98	32.99
	33.00	33.04	33.15	32.77	32.83	32.79	32.64	32.97	33.00
Average	33.00	33.04	33.12	32.78	32.80	32.78	32.65	32.97	32.99
Standard deviation	0.03	0.02	0.03	0.01	0.04	0.01	0.06	0.02	0.01
DO (mg/L)	7.54	7.54	7.47	7.56	7.55	7.55	7.52	7.52	7.51
	7.52	7.54	7.52	7.57	7.56	7.55	7.52	7.53	7.49
	7.5	7.55	7.52	7.57	7.55	7.54	7.51	7.54	7.50
Average	7.52	7.54	7.50	7.57	7.55	7.55	7.52	7.53	7.50
Standard deviation	0.02	0.01	0.03	0.01	0.01	0.01	0.01	0.01	0.01
Turbidity (NTU)	4.88	4.12	4.39	5.01	4.02	3.73	4.54	4.19	4.52
	4.98	4.99	4.01	4.45	4.36	3.96	4.34	3.51	4.67
	5.30	4.59	4.29	4.89	3.95	4.09	5.01	3.94	4.26
Average	5.05	4.57	4.23	4.78	4.11	3.93	4.63	3.88	4.48
Standard deviation	0.22	0.44	0.20	0.29	0.22	0.18	0.34	0.34	0.21
TSS (mg/L)	26.8	25.2	20.8	26.8	18.8	22.4	18.4	27.2	21.6
	26.8	27.6	27.6	24.4	26.4	22.0	22.8	21.2	24.8
	26.8	20.8	26.4	21.6	25.6	24.8	24.0	22.4	26.4
Average	26.8	24.5	24.9	24.3	23.6	23.1	21.7	23.6	24.3
Standard deviation	0.00	3.45	3.63	2.60	4.18	1.51	2.95	3.17	2.44
DOC (mg/L)	3.11	3.70	3.73	3.17	3.53	3.42	3.93	3.69	3.66
TOC (mg/L)	2.00	2.01	2.45	0.40	1.05	1.08	2.15	2.07	2.90

G4B(www.g4b.go.kr)진위확인코드 : mul2jn1x3RU=

IV. TO BE CONTINUED

- **Ballasting (2nd cycle : 2013. 06. 06)** - Viable organisms

Test Item	Test water			Control water			Treated water		
	B	M	E	B	M	E	B	M	E
≥ 50 μm (inds/m³)	210 500	162 000	183 000	158 000	172 500	141 500	2 800	5 600	2 900
	183 500	180 500	154 000	165 500	152 000	138 500	4 100	6 700	3 400
	188 500	169 000	165 500	143 000	144 500	130 500	3 700	6 700	3 300
Average	194 167	170 500	167 500	155 500	156 334	136 834	3 534	6 334	3 200
Standard deviation	11 728	7 627	11 923	9 354	11 835	4 643	544	519	216
≥ 10 - 50 μm (inds/mL)	1 185	1 150	1 441	1 322	1 468	1 237	1	1	1
	1 496	1 327	1 527	1 493	1 376	1 172	1	1	0
	1 235	1 587	1 264	1 555	1 468	1 221	1	1	0
Average	1 306	1 355	1 411	1 457	1 438	1 210	1	1	1
Standard deviation	167	220	134	121	53	34	0	0	1

- **Ballasting (2nd cycle : 2013. 06. 06)** - Bacteria

Test Item	Test water			Control water			Treated water		
	B	M	E	B	M	E	B	M	E
Heterotrophic bacteria (CFU/mL)	10 800	11 100	12 300	10 100	10 300	10 400	0	0	0
	16 100	11 700	14 100	7 900	13 600	12 100	0	0	0
	13 300	11 600	10 500	9 100	9 600	8 400	0	0	0
Average	13 400	11 467	12 300	9 034	11 167	10 300	0	0	0
Standard deviation	2 651	321	1 800	1 102	2 136	1 852	0	0	0
Coliform (CFU/100 mL)	10	0	5	5	10	5	0	0	1
	10	0	0	5	5	0	0	0	0
	5	0	0	0	5	0	0	0	0
Average	9	0	2	4	7	2	0	0	1
Standard deviation	3	0	3	3	3	3	0	0	1
Escherichia coli (CFU/100 mL)	0	0	0	5	0	0	0	0	0
	0	0	0	0	0	0	0	0	0
	0	0	0	0	0	0	0	0	0
Average	0	0	0	2	0	0	0	0	0
Standard deviation	0	0	0	3	0	0	0	0	0
Intestinal Enterococci (CFU/100 mL)	20	45	15	20	15	5	0	0	0
	30	15	10	40	5	10	0	0	0
	30	10	5	55	20	25	0	0	0
Average	27	24	10	39	14	14	0	0	0
Standard deviation	6	19	5	18	8	10	0	0	0
Toxicogenic *Vibrio cholerae* (O1, O139) (CFU/100 mL)	0	0	0	0	0	0	0	0	0
	0	0	0	0	0	0	0	0	0
	0	0	0	0	0	0	0	0	0
Average	0	0	0	0	0	0	0	0	0
Standard deviation	0	0	0	0	0	0	0	0	0

G4B(www.g4b.go.kr)진위확인코드 : muf2jn1x3RU=

IV. TO BE CONTINUED

- **de-Ballasting (2nd cycle : 2013. 06. 11)** - Basic water parameter

Test Item	Control water			Treated water		
	B	M	E	B	M	E
Water temperature (℃)	21.07	21.17	20.98	21.37	21.36	21.19
	21.06	21.08	20.94	21.05	21.06	21.05
	21.07	21.05	20.93	21.05	21.06	21.02
Average	21.07	21.10	20.95	21.16	21.16	21.09
Standard deviation	0.01	0.06	0.03	0.18	0.17	0.09
pH	7.52	7.51	7.52	7.43	7.51	7.53
	7.52	7.52	7.53	7.49	7.53	7.56
	7.53	7.53	7.53	7.51	7.54	7.56
Average	7.52	7.52	7.53	7.48	7.53	7.55
Standard deviation	0.01	0.01	0.01	0.04	0.02	0.02
ORP (mV)	277	263	247	438	351	317
	269	255	242	435	341	303
	265	252	239	427	330	297
Average	270	257	243	433	341	306
Standard deviation	6	6	4	6	11	10
Salinity (PSU)	32.85	32.95	33.00	32.80	32.76	32.72
	32.94	33.01	33.04	32.90	32.90	32.87
	32.90	32.99	33.04	32.95	32.96	32.91
Average	32.90	32.98	33.03	32.88	32.87	32.83
Standard deviation	0.05	0.03	0.02	0.08	0.10	0.10
DO (mg/L)	6.75	6.79	6.67	7.33	7.36	7.34
	6.75	6.82	6.65	7.39	7.43	7.35
	6.77	6.81	6.63	7.38	7.41	7.34
Average	6.76	6.81	6.65	7.37	7.40	7.34
Standard deviation	0.01	0.02	0.02	0.03	0.04	0.01
Turbidity (NTU)	4.00	3.87	4.06	4.04	3.58	4.13
	4.14	4.25	4.21	3.92	3.57	4.20
	4.00	3.61	4.13	3.83	3.73	3.74
Average	4.05	3.91	4.13	3.93	3.63	4.02
Standard deviation	0.08	0.32	0.08	0.11	0.09	0.25
TSS (mg/L)	24.4	18.0	20.0	28.8	24.8	14.8
	20.8	23.2	24.8	22.0	21.2	26.4
	13.6	23.6	26.0	29.2	24.4	17.6
Average	19.6	21.6	23.6	26.7	23.5	19.6
Standard deviation	5.50	3.12	3.17	4.05	1.97	6.05
DOC (mg/L)	1.77	2.74	2.79	4.61	4.92	4.79
TOC (mg/L)	1.35	2.16	0.49	0.76	2.36	2.52

G4B(www.g4b.go.kr)진위확인코드 : mut2jn1x3RU=

IV. TO BE CONTINUED

- **de-Ballasting (2nd cycle : 2013. 06. 11) - Viable organisms**

Test Item	Control water			Treated water		
	B	M	E	B	M	E
≥ 50 μm (inds/m³)	1 000	2 500	1 500	0*	0	0
	3 000	1 000	1 500			
	4 500	1 500	1 000			
Average	2 834	1 667	1 334			
Standard deviation	1 756	764	289			
≥ 10 - 50 μm (inds/mL)	491	298	285	0	0	0
	436	380	351	0	0	0
	456	348	321	0	0	0
Average	461	342	319	0	0	0
Standard deviation	28	41	33	0	0	0

* Analysed entire sample volume

- **de-Ballasting (2nd cycle : 2013. 06. 11) - Bacteria**

Test Item	Control water			Treated water		
	B	M	E	B	M	E
Heterotrophic bacteria (CFU/mL)	TNTC*	TNTC	TNTC	2 090	1 410	2 620
	TNTC	TNTC	TNTC	1 310	710	1 940
	TNTC	TNTC	TNTC	1 080	1 270	2 430
Average	TNTC	TNTC	TNTC	1 493	1 130	2 330
Standard deviation	0	0	0	529	370	351
Coliform (CFU/100 mL)	0	0	0	0	0	1
	0	0	0	0	0	0
	0	0	0	0	0	0
Average	0	0	0	0	0	1
Standard deviation	0	0	0	0	0	1
Escherichia coli (CFU/100 mL)	0	0	0	0	0	0
	0	0	0	0	0	0
	0	0	0	0	0	0
Average	0	0	0	0	0	0
Standard deviation	0	0	0	0	0	0
Intestinal Enterococci (CFU/100 mL)	6	8	26	0	0	1
	4	2	8	0	0	0
	0	2	20	0	0	0
Average	4	4	18	0	0	1
Standard deviation	3	3	9	0	0	1
Toxicogenic *Vibrio cholerae* (O1, O139) (CFU/100 mL)	0	0	0	0	0	0
	0	0	0	0	0	0
	0	0	0	0	0	0
Average	0	0	0	0	0	0
Standard deviation	0	0	0	0	0	0

* Too Numerous To Count

G4B(www.g4b.go.kr)진위확인코드 : mul2jn1x3RU=

IV. TO BE CONTINUED

- **Ballasting (3rd cycle : 2013. 06. 13)** – Basic water parameter

Test Item	Test water			Control water			Treated water		
	B	M	E	B	M	E	B	M	E
Water temperature (℃)	19.96	19.95	20.05	19.92	19.81	19.88	19.89	19.82	19.95
	20.00	19.82	19.92	19.90	19.85	19.86	19.88	19.83	19.94
	19.91	19.82	19.92	19.88	19.87	19.84	19.92	19.85	19.95
Average	19.96	19.86	19.96	19.90	19.84	19.86	19.90	19.83	19.95
Standard deviation	0.05	0.08	0.08	0.02	0.03	0.02	0.02	0.02	0.01
pH	7.83	7.82	7.83	7.86	7.85	7.86	7.65	7.60	7.60
	7.84	7.83	7.84	7.88	7.86	7.87	7.65	7.60	7.60
	7.85	7.84	7.85	7.89	7.86	7.87	7.65	7.60	7.60
Average	7.84	7.83	7.84	7.88	7.86	7.87	7.65	7.60	7.60
Standard deviation	0.01	0.01	0.01	0.02	0.01	0.01	0.00	0.00	0.00
ORP (mV)	276	548	642	246	550	602	723	740	744
	270	548	635	246	552	597	724	744	750
	267	548	628	241	555	587	730	747	753
Average	271	548	635	244	552	595	726	744	749
Standard deviation	5	0	7	3	3	8	4	4	5
Salinity (PSU)	32.5	32.78	32.61	32.61	32.88	32.84	32.79	32.94	32.83
	32.69	32.92	32.79	32.65	32.88	32.86	32.81	32.94	32.78
	32.65	32.93	32.82	32.65	32.89	32.86	32.80	32.94	32.80
Average	32.61	32.88	32.74	32.64	32.88	32.85	32.80	32.94	32.80
Standard deviation	0.10	0.08	0.11	0.02	0.01	0.01	0.01	0.00	0.03
DO (mg/L)	7.54	7.5	7.48	7.55	7.53	7.52	7.52	7.49	7.47
	7.55	7.53	7.51	7.54	7.54	7.53	7.51	7.49	7.49
	7.53	7.53	7.53	7.55	7.54	7.53	7.52	7.49	7.49
Average	7.54	7.52	7.51	7.55	7.54	7.53	7.52	7.49	7.48
Standard deviation	0.01	0.02	0.03	0.01	0.01	0.01	0.01	0.00	0.01
Turbidity (NTU)	5.27	4.57	4.28	3.98	4.32	4.64	3.90	3.63	3.84
	5.13	4.50	4.57	4.07	4.38	3.95	3.98	3.72	4.01
	4.93	4.52	4.39	4.66	4.16	4.07	3.88	3.92	3.93
Average	5.11	4.53	4.41	4.24	4.29	4.22	3.92	3.76	3.93
Standard deviation	0.17	0.04	0.15	0.37	0.11	0.37	0.05	0.15	0.09
TSS (mg/L)	22.4	28.0	19.2	29.2	21.2	33.6	24.8	29.2	14.4
	27.6	26.4	28.0	28.8	36.4	44.4	18.0	26.8	27.6
	30.4	22.0	32.4	32.4	28.0	30.8	24.0	24.0	27.2
Average	26.8	25.5	26.5	30.1	28.5	36.3	22.3	26.7	23.1
Standard deviation	4.06	3.11	6.72	1.97	7.61	7.18	3.72	2.60	7.51
DOC (mg/L)	3.62	3.62	3.74	3.68	3.67	3.54	3.99	3.65	3.58
TOC (mg/L)	2.49	1.71	2.04	1.71	1.57	1.79	2.23	2.48	0.24

G4B(www.g4b.go.kr)진위확인코드 : muf2jn1x3RU=

IV. TO BE CONTINUED

- **Ballasting (3rd cycle : 2013. 06. 13)** - Viable organisms

Test Item	Test water			Control water			Treated water		
	B	M	E	B	M	E	B	M	E
≥ 50 μm (inds/m³)	171 500	188 500	145 500	153 500	167 000	129 000	10 950	10 500	11 850
	190 000	201 500	135 500	166 500	172 500	119 000	13 650	9 450	9 900
	221 000	200 500	133 000	161 000	165 000	114 000	11 250	8 850	12 150
Average	194 167	196 834	138 000	160 334	168 167	120 667	11 950	9 600	11 300
Standard deviation	20 422	5 907	5 401	5 328	3 171	6 236	1 208	682	997
≥ 10 - 50 μm (inds/mL)	1 227	1 549	1 167	1 080	1 861	1 551	1	0	1
	1 248	1 394	1 129	1 042	1 467	1 538	1	1	1
	1 212	1 425	1 511	1 162	1 552	1 319	1	1	1
Average	1 229	1 456	1 269	1 095	1 627	1 470	1	1	1
Standard deviation	18	82	210	61	207	130	0	1	0

- **Ballasting (3rd cycle : 2013. 06. 13)** - Bacteria

Test Item	Test water			Control water			Treated water		
	B	M	E	B	M	E	B	M	E
Heterotrophic bacteria (CFU/mL)	2 300	1 400	3 900	9 700	2 100	13 900	0	0	0
	3 300	3 400	4 100	7 000	800	18 400	0	0	0
	4 000	0	3 600	8 900	700	23 900	0	0	0
Average	3 200	1 600	3 867	8 534	1 200	18 734	0	0	0
Standard deviation	854	1 709	252	1 387	781	5 008	0	0	0
Coliform (CFU/100 mL)	2	0	0	0	22	2	0	0	0
	0	0	0	0	4	0	0	0	0
	0	0	0	0	0	0	0	0	0
Average	1	0	0	0	9	1	0	0	0
Standard deviation	1	0	0	0	12	1	0	0	0
Escherichia coli (CFU/100 mL)	2	0	0	0	2	2	0	0	0
	0	0	0	0	0	0	0	0	0
	0	0	0	0	0	0	0	0	0
Average	1	0	0	0	1	1	0	0	0
Standard deviation	1	0	0	0	1	1	0	0	0
Intestinal Enterococci (CFU/100 mL)	10	40	28	12	16	14	0	0	0
	30	26	30	28	14	24	0	0	0
	32	40	42	26	40	24	0	0	0
Average	24	36	34	22	24	21	0	0	0
Standard deviation	12	8	8	9	14	6	0	0	0
Toxicogenic *Vibrio cholerae* (O1, O139) (CFU/100 mL)	0	0	0	0	0	0	0	0	0
	0	0	0	0	0	0	0	0	0
	0	0	0	0	0	0	0	0	0
Average	0	0	0	0	0	0	0	0	0
Standard deviation	0	0	0	0	0	0	0	0	0

G4B(www.g4b.go.kr)전위확인코드 : mul2jn1x3RU=

IV. TO BE CONTINUED

- **de-Ballasting (3rd cycle : 2013. 06. 18)** – Basic water parameter

Test Item	Control water			Treated water		
	B	M	E	B	M	E
Water temperature (℃)	22.21	22.29	22.43	22.24	22.46	22.43
	22.32	22.23	22.29	22.10	22.11	22.17
	22.26	22.23	22.22	22.16	22.24	22.16
Average	22.26	22.25	22.31	22.17	22.27	22.25
Standard deviation	0.06	0.03	0.11	0.07	0.18	0.15
pH	7.45	7.45	7.47	7.47	7.48	7.55
	7.44	7.46	4.46	7.50	7.52	7.55
	7.45	7.46	7.46	7.51	7.53	7.56
Average	7.45	7.46	6.46	7.49	7.51	7.55
Standard deviation	0.01	0.01	1.73	0.02	0.03	0.01
ORP (mV)	279	277	279	503	461	281
	280	278	278	485	430	276
	282	280	279	470	401	275
Average	280	278	279	486	431	277
Standard deviation	2	2	1	17	30	3
Salinity (PSU)	33.50	33.43	33.38	33.56	33.35	33.41
	33.49	33.54	33.43	33.61	33.56	33.57
	33.54	33.53	33.48	33.60	33.51	33.57
Average	33.51	33.50	33.43	33.59	33.47	33.52
Standard deviation	0.03	0.06	0.05	0.03	0.11	0.09
DO (mg/L)	6.38	6.40	6.41	7.05	7.03	6.98
	6.35	6.42	6.44	7.05	7.12	6.97
	6.32	6.45	6.45	7.04	7.10	6.97
Average	6.35	6.42	6.43	7.05	7.08	6.97
Standard deviation	0.03	0.03	0.02	0.01	0.05	0.01
Turbidity (NTU)	3.82	3.99	5.08	4.26	5.16	4.36
	4.00	3.83	5.20	4.22	5.50	4.71
	3.86	3.60	4.63	4.89	4.95	4.98
Average	3.89	3.81	4.97	4.46	5.20	4.68
Standard deviation	0.09	0.20	0.30	0.38	0.28	0.31
TSS (mg/L)	14.0	23.2	25.6	15.2	32.4	21.6
	20.4	26.8	26.4	24.8	28.0	26.0
	18.4	20.0	29.2	22.0	32.8	26.4
Average	17.6	23.3	27.1	20.7	31.1	24.7
Standard deviation	3.27	3.40	1.89	4.94	2.66	2.66
DOC (mg/L)	2.14	2.16	2.25	4.00	4.06	4.01
TOC (mg/L)	1.27	1.23	1.97	2.25	1.82	1.15

G4B(www.g4b.go.kr)진위확인코드 : mul2jn1x3RU=

IV. TO BE CONTINUED

- **de-Ballasting (3rd cycle : 2013. 06. 18)** - Viable organisms

Test Item	Control water			Treated water		
	B	M	E	B	M	E
≥ 50 μm (inds/m³)	3 000	4 000	3 000	1*	0	1
	500	2 500	1 000			
	4 500	4 000	500			
Average	2 667	3 500	1 500			
Standard deviation	2 021	866	1 323			
≥ 10 - 50 μm (inds/mL)	374	258	335	1	1	0
	291	264	322	0	0	0
	346	252	276	0	0	0
Average	337	258	311	1	1	0
Standard deviation	42	6	31	1	1	0

* Analysed entire sample volume

- **de-Ballasting (3rd cycle : 2013. 06. 18)** - Bacteria

Test Item	Control water			Treated water		
	B	M	E	B	M	E
Heterotrophic bacteria (CFU/mL)	12 300	20 500	17 900	1 670	1 080	720
	10 500	19 000	19 300	1 230	1 010	850
	10 300	17 900	21 600	1 140	970	800
Average	11 034	19 134	19 600	1 347	1 020	790
Standard deviation	1 102	1 305	1 868	284	56	66
Coliform (CFU/100 mL)	0	0	0	0	0	0
	0	0	0	0	0	0
	0	0	0	0	0	0
Average	0	0	0	0	0	0
Standard deviation	0	0	0	0	0	0
Escherichia coli (CFU/100 mL)	0	0	0	0	0	0
	0	0	0	0	0	0
	0	0	0	0	0	0
Average	0	0	0	0	0	0
Standard deviation	0	0	0	0	0	0
Intestinal Enterococci (CFU/100 mL)	10	4	8	0	0	0
	4	2	6	0	0	0
	4	2	6	0	0	0
Average	6	3	7	0	0	0
Standard deviation	3	1	1	0	0	0
Toxicogenic *Vibrio cholerae* (O1, O139) (CFU/100 mL)	0	0	0	0	0	0
	0	0	0	0	0	0
	0	0	0	0	0	0
Average	0	0	0	0	0	0
Standard deviation	0	0	0	0	0	0

G4B(www.g4b.go.kr)진위확인코드 : mut2jn1x3RU=

IV. TO BE CONTINUED

- **Ballasting (4th cycle : 2013. 06. 20)** - Basic water parameter

Test Item	Test water			Control water			Treated water		
	B	M	E	B	M	E	B	M	E
Water temperature (℃)	23.84	23.82	23.82	23.85	23.81	23.79	23.85	23.85	23.84
	23.83	23.83	23.83	23.81	23.78	23.77	23.83	23.86	23.83
	23.83	23.8	23.83	23.80	23.76	23.77	23.81	23.82	23.74
Average	23.83	23.82	23.83	23.82	23.78	23.78	23.83	23.84	23.80
Standard deviation	0.01	0.02	0.01	0.03	0.03	0.01	0.02	0.02	0.06
pH	7.83	7.86	7.87	7.88	7.88	7.89	7.67	7.58	7.59
	7.85	7.88	7.87	7.89	7.89	7.89	7.67	7.56	7.59
	7.85	7.87	7.88	7.89	7.89	7.89	7.67	7.57	7.57
Average	7.84	7.87	7.87	7.89	7.89	7.89	7.67	7.57	7.58
Standard deviation	0.01	0.01	0.01	0.01	0.01	0.00	0.00	0.01	0.01
ORP (mV)	354	305	387	332	332	385	774	799	801
	347	309	386	329	335	383	797	811	810
	339	323	387	326	335	380	804	816	818
Average	347	312	387	329	334	383	792	809	810
Standard deviation	8	9	1	3	2	3	16	9	9
Salinity (PSU)	33.11	32.80	33.01	33.06	33.19	33.16	33.01	33.26	32.78
	33.21	33.17	33.20	33.08	33.19	33.15	33.03	33.26	32.64
	33.21	33.22	33.19	33.08	33.19	33.16	33.06	33.26	32.89
Average	33.18	33.06	33.13	33.07	33.19	33.16	33.03	33.26	32.77
Standard deviation	0.06	0.23	0.11	0.01	0.00	0.01	0.03	0.00	0.13
DO (mg/L)	6.82	6.60	6.79	6.81	6.80	6.80	6.80	6.79	6.82
	6.81	6.75	6.79	6.82	6.81	8.79	6.80	6.79	6.82
	6.81	6.81	6.80	6.82	6.82	6.80	6.80	6.80	6.82
Average	6.81	6.72	6.79	6.82	6.81	7.46	6.80	6.79	6.82
Standard deviation	0.01	0.11	0.01	0.01	0.01	1.15	0.00	0.01	0.00
Turbidity (NTU)	4.21	3.72	3.93	3.87	3.56	3.85	3.51	3.48	3.23
	4.74	4.18	3.92	3.66	3.50	3.89	4.29	3.36	3.92
	3.90	3.78	3.95	4.02	3.63	3.65	3.86	3.70	3.10
Average	4.28	3.89	3.93	3.85	3.56	3.80	3.89	3.51	3.42
Standard deviation	0.42	0.25	0.02	0.18	0.07	0.13	0.39	0.17	0.44
TSS (mg/L)	16.8	18.4	24.4	25.2	29.2	13.6	27.6	21.6	14.0
	24.0	24.4	27.6	26.4	22.0	20.8	22.0	17.6	38.0
	20.0	20.4	23.2	20.8	20.8	22.4	23.2	22.8	10.8
Average	20.3	21.1	25.1	24.1	24.0	18.9	24.3	20.7	20.9
Standard deviation	3.61	3.06	2.27	2.95	4.54	4.69	2.95	2.72	14.9
DOC (mg/L)	3.60	3.45	3.72	3.49	3.57	3.47	3.47	3.44	3.31
TOC (mg/L)	2.76	2.78	2.12	2.63	2.18	2.43	2.47	2.46	2.48

G4B(www.g4b.go.kr)진위확인코드 : muf2In1x3RU=

IV. TO BE CONTINUED

- **Ballasting (4th cycle : 2013. 06. 20)** - Viable organisms

Test Item	Test water			Control water			Treated water		
	B	M	E	B	M	E	B	M	E
≥ 50 μm (inds/m³)	135 000	150 500	166 000	119 000	168 000	140 000	570	4 050	4 410
	147 000	150 000	164 500	130 500	188 000	139 500	810	4 260	4 920
	132 500	180 500	180 500	117 500	198 500	129 000	720	4 140	5 160
Average	138 167	160 334	170 334	122 334	184 834	136 167	700	4 150	4 830
Standard deviation	6 329	14 261	7 215	5 807	12 651	5 072	99	86	313
≥ 10 - 50 μm (inds/mL)	1 531	1 128	1 020	1 367	1 211	1 109	0	0	0
	1 319	1 136	1 040	1 102	1 112	1 096	0	0	0
	1 582	1 390	1 061	1 319	1 036	1 090	1	0	0
Average	1 478	1 218	1 041	1 263	1 120	1 099	1	0	0
Standard deviation	139	149	21	141	88	10	1	0	0

- **Ballasting (4th cycle : 2013. 06. 20)** - Bacteria

Test Item	Test water			Control water			Treated water		
	B	M	E	B	M	E	B	M	E
Heterotrophic bacteria (CFU/mL)	9 200	10 100	9 300	5 100	8 100	7 500	0	0	0
	12 300	9 700	10 200	6 000	7 000	6 300	0	0	0
	9 300	11 300	10 000	7 100	6 100	5 500	0	0	0
Average	10 267	10 367	9 834	6 067	7 067	6 434	0	0	0
Standard deviation	1 762	833	473	1 002	1 002	1 007	0	0	0
Coliform (CFU/100 mL)	TNTC*	TNTC	TNTC	TNTC	TNTC	TNTC	0	0	0
	TNTC	TNTC	TNTC	TNTC	TNTC	TNTC	0	0	0
	TNTC	TNTC	TNTC	TNTC	TNTC	TNTC	0	0	0
Average	TNTC	TNTC	TNTC	TNTC	TNTC	TNTC	0	0	0
Standard deviation	0	0	0	0	0	0	0	0	0
Escherichia coli (CFU/100 mL)	12	12	10	8	10	4	0	0	0
	8	6	6	6	8	4	0	0	0
	8	2	2	4	4	2	0	0	0
Average	10	7	6	6	8	4	0	0	0
Standard deviation	2	5	4	2	3	1	0	0	0
Intestinal Enterococci (CFU/100 mL)	50	34	52	30	36	66	0	0	0
	52	40	64	36	40	66	0	0	0
	58	46	48	54	42	54	0	0	0
Average	54	40	55	40	40	62	0	0	0
Standard deviation	4	6	8	12	3	7	0	0	0
Toxicogenic *Vibrio cholerae* (O1 O139) (CFU/100 mL)	0	0	0	0	0	0	0	0	0
	0	0	0	0	0	0	0	0	0
	0	0	0	0	0	0	0	0	0
Average	0	0	0	0	0	0	0	0	0
Standard deviation	0	0	0	0	0	0	0	0	0

* Too Numerous To Count

G4B(www.g4b.go.kr)진위확인코드 : muf2lnlx3RU=

IV. TO BE CONTINUED

- **de-Ballasting (4th cycle : 2013. 06. 25)** - Basic water parameter

Test Item	Control water			Treated water		
	B	M	E	B	M	E
Water temperature (℃)	23.52	23.51	23.52	23.41	23.52	23.57
	23.52	23.52	23.55	23.44	23.52	23.52
	23.52	23.50	23.49	23.45	23.54	23.53
Average	23.52	23.51	23.52	23.43	23.53	23.54
Standard deviation	0.00	0.01	0.03	0.02	0.01	0.03
pH	7.37	7.38	7.39	7.57	7.57	7.56
	7.37	7.38	7.38	7.55	7.57	7.56
	7.37	7.38	7.38	7.56	7.58	7.56
Average	7.37	7.38	7.38	7.56	7.57	7.56
Standard deviation	0.00	0.00	0.01	0.01	0.01	0.00
ORP (mV)	281	281	282	316	269	268
	281	281	281	315	264	263
	282	282	282	313	261	262
Average	281	281	282	315	265	264
Standard deviation	1	1	1	2	4	3
Salinity (PSU)	33.14	33.13	33.08	32.84	33.09	33.05
	33.28	33.25	33.20	33.26	33.23	33.19
	33.24	33.26	33.23	33.13	33.24	33.22
Average	33.22	33.21	33.17	33.08	33.19	33.15
Standard deviation	0.07	0.07	0.08	0.22	0.08	0.09
DO (mg/L)	6.29	6.03	6.39	6.71	6.91	6.86
	6.25	6.08	6.39	6.89	6.88	6.86
	6.27	6.06	6.37	6.90	6.89	6.86
Average	6.27	6.06	6.38	6.83	6.89	6.86
Standard deviation	0.02	0.03	0.01	0.11	0.02	0.00
Turbidity (NTU)	3.00	3.15	3.22	3.69	3.56	3.64
	3.30	3.59	3.30	4.13	3.36	3.41
	2.96	3.24	3.30	3.29	3.64	3.64
Average	3.09	3.33	3.27	3.70	3.52	3.56
Standard deviation	0.19	0.23	0.05	0.42	0.14	0.13
TSS (mg/L)	8.0	16.0	10.8	10.0	22.8	21.6
	17.2	18.8	18.4	26.4	24.0	16.4
	21.2	12.4	19.2	13.6	20.4	12.4
Average	15.5	15.7	16.1	16.7	22.4	16.8
Standard deviation	6.77	3.21	4.64	8.62	1.83	4.61
DOC (mg/L)	2.04	2.05	2.13	3.66	3.61	3.76
TOC (mg/L)	0.35	0.26	0.25	2.21	2.40	2.34

G4B(www.g4b.go.kr)진위확인코드 : mul2jn1x3RU=

IV. TO BE CONTINUED

- **de-Ballasting (4th cycle : 2013. 06. 25)** - Viable organisms

Test Item	Control water			Treated water		
	B	M	E	B	M	E
≥ 50 μm (inds/m³)	7 500	8 500	4 500	0*	0	0
	9 500	8 500	7 500			
	5 500	8 000	5 000			
Average	7 500	8 334	5 667			
Standard deviation	2 000	289	1 607			
≥ 10 - 50 μm (inds/mL)	323	462	453	0	1	0
	372	525	475	0	0	0
	468	455	465	0	0	0
Average	388	481	465	0	1	0
Standard deviation	74	39	11	0	1	0

* Analysed entire sample volume

- **de-Ballasting (4th cycle : 2013. 06. 25)** - Bacteria

Test Item	Control water			Treated water		
	B	M	E	B	M	E
Heterotrophic bacteria (CFU/mL)	5 800	9 200	15 600	1 620	690	1 840
	13 700	9 500	6 300	1 280	590	1 580
	15 500	13 700	5 600	1 830	720	1 590
Average	11 667	10 800	9 167	1 577	667	1 670
Standard deviation	5 160	2 516	5 582	278	68	147
Coliform (CFU/100 mL)	0	0	0	0	0	0
	0	0	0	0	0	0
	0	0	0	0	0	0
Average	0	0	0	0	0	0
Standard deviation	0	0	0	0	0	0
Escherichia coli (CFU/100 mL)	0	2	2	0	0	0
	0	0	0	0	0	0
	0	0	0	0	0	0
Average	0	1	1	0	0	0
Standard deviation	0	1	1	0	0	0
Intestinal Enterococci (CFU/100 mL)	4	6	4	1	0	0
	8	16	12	0	0	0
	4	2	4	0	0	0
Average	6	8	7	1	0	0
Standard deviation	2	7	5	1	0	0
Toxicogenic *Vibrio cholerae* (O1, O139) (CFU/100 mL)	0	0	0	0	0	0
	0	0	0	0	0	0
	0	0	0	0	0	0
Average	0	0	0	0	0	0
Standard deviation	0	0	0	0	0	0

G4B(www.g4b.go.kr)진위확인코드 : mul2lnlx3RU=

IV. TO BE CONTINUED

- **Ballasting (5th cycle : 2013. 07. 04)** - Basic water parameter

Test Item	Test water			Control water			Treated water		
	B	M	E	B	M	E	B	M	E
Water temperature (℃)	23.71	23.58	23.66	23.48	23.52	23.58	23.56	23.56	23.61
	23.74	23.51	23.57	23.49	23.51	23.60	23.52	23.57	23.63
	23.48	23.5	23.58	23.52	23.52	23.59	23.54	23.57	23.65
Average	23.64	23.53	23.60	23.50	23.52	23.59	23.54	23.57	23.63
Standard deviation	0.14	0.04	0.05	0.02	0.01	0.01	0.02	0.01	0.02
pH	8.00	8.06	8.07	8.05	8.07	8.08	7.85	7.77	7.78
	8.03	8.06	8.08	8.06	8.07	8.08	7.85	7.77	7.78
	8.04	8.06	8.07	8.06	8.08	8.08	7.83	7.77	7.77
Average	8.02	8.06	8.07	8.06	8.07	8.08	7.84	7.77	7.78
Standard deviation	0.02	0.00	0.01	0.01	0.01	0.00	0.01	0.00	0.01
ORP (mV)	360	259	276	333	279	282	795	808	798
	347	262	279	327	279	281	804	812	814
	341	267	283	321	278	280	802	814	821
Average	349	263	279	327	279	281	800	811	811
Standard deviation	10	4	4	6	1	1	5	3	12
Salinity (PSU)	33.47	33.62	33.62	33.57	33.72	33.76	33.68	33.76	33.59
	33.72	33.68	33.72	33.58	33.72	33.75	33.66	33.77	33.53
	33.72	33.67	33.73	33.59	33.72	33.73	32.96	33.77	33.61
Average	33.64	33.66	33.69	33.58	33.72	33.75	33.43	33.77	33.58
Standard deviation	0.14	0.03	0.06	0.01	0.00	0.02	0.41	0.01	0.04
DO (mg/L)	6.76	6.76	6.78	6.83	6.82	6.80	6.80	6.79	6.80
	6.80	6.81	6.80	6.82	6.83	6.81	6.83	6.78	6.79
	6.81	6.81	6.81	6.81	6.83	6.8	6.81	6.80	6.81
Average	6.79	6.79	6.80	6.82	6.83	6.80	6.81	6.79	6.80
Standard deviation	0.03	0.03	0.02	0.01	0.01	0.01	0.02	0.01	0.01
Turbidity (NTU)	3.75	3.98	4.03	3.59	3.64	3.90	3.29	3.50	4.02
	3.74	3.84	4.20	3.30	3.20	3.91	3.45	3.28	3.82
	3.57	3.91	4.12	3.76	3.76	3.94	4.95	3.75	3.75
Average	3.69	3.91	4.12	3.55	3.53	3.92	3.90	3.51	3.86
Standard deviation	0.10	0.07	0.09	0.23	0.29	0.02	0.92	0.24	0.14
TSS (mg/L)	23.2	25.2	28.0	31.2	24.0	24.8	22.0	26.8	30.4
	28.4	31.2	29.2	34.4	30.0	31.2	27.2	25.2	29.2
	32.4	16.4	34.4	26.0	28.4	28.4	29.6	29.2	30.8
Average	28.0	24.3	30.5	30.5	27.5	28.1	26.3	27.1	30.1
Standard deviation	4.61	7.44	3.40	4.24	3.11	3.21	3.89	2.01	0.83
DOC (mg/L)	3.35	3.42	3.57	3.32	3.79	3.26	3.08	3.07	3.11
TOC (mg/L)	2.01	2.62	2.41	2.07	2.18	1.85	2.19	2.58	1.73

G4B(www.g4b.go.kr)진위확인코드 : mul2jn1x3RU=

IV. TO BE CONTINUED

- **Ballasting (5th cycle : 2013. 07. 04)** - Viable organisms

Test Item	Test water			Control water			Treated water		
	B	M	E	B	M	E	B	M	E
≥ 50 μm (inds/m³)	509 000	307 000	474 000	387 000	432 000	372 000	1 400	1 760	2 600
	459 000	437 000	456 000	328 000	375 000	358 000	1 040	2 240	2 840
	490 000	353 000	475 000	354 000	430 000	313 000	1 200	1 280	3 320
Average	486 000	365 667	468 334	356 334	412 334	347 667	1 214	1 760	2 920
Standard deviation	20 607	53 823	8 731	24 143	26 411	25 171	147	392	299
≥ 10 - 50 μm (inds/mL)	1 268	1 184	1 146	1 313	1 103	1 039	1	1	1
	1 263	1 140	1 165	1 227	1 056	1 154	1	1	1
	1 194	1 019	1 096	1 114	1 184	1 196	1	1	0
Average	1 242	1 115	1 136	1 218	1 115	1 130	1	1	1
Standard deviation	41	85	36	100	65	81	0	0	1

- **Ballasting (5th cycle : 2013. 07. 04)** - Bacteria

Test Item	Test water			Control water			Treated water		
	B	M	E	B	M	E	B	M	E
Heterotrophic bacteria (CFU/mL)	10 300	10 800	12 400	8 800	6 500	5 700	0	0	0
	11 300	9 600	10 800	10 500	4 800	4 200	0	0	0
	13 600	15 600	10 800	7 300	5 400	5 100	0	0	0
Average	11 734	12 000	11 334	8 867	5 567	5 000	0	0	0
Standard deviation	1 692	3 175	924	1 601	862	755	0	0	0
Coliform (CFU/100 mL)	0	0	0	0	0	0	0	0	0
	0	0	0	0	0	0	0	0	0
	0	0	0	0	0	0	0	0	0
Average	0	0	0	0	0	0	0	0	0
Standard deviation	0	0	0	0	0	0	0	0	0
Escherichia coli (CFU/100 mL)	2	2	10	6	8	8	0	0	0
	2	0	10	2	6	6	0	0	0
	4	0	10	6	4	4	0	0	0
Average	3	1	10	5	6	6	0	0	0
Standard deviation	1	1	0	2	2	2	0	0	0
Intestinal Enterococci (CFU/100 mL)	38	16	20	22	22	28	0	0	0
	40	26	24	40	40	32	0	0	0
	34	26	14	26	32	26	0	0	0
Average	38	23	20	30	32	29	0	0	0
Standard deviation	3	6	5	9	9	3	0	0	0
Toxicogenic *Vibrio cholerae* (O1, O139) (CFU/100 mL)	0	0	0	0	0	0	0	0	0
	0	0	0	0	0	0	0	0	0
	0	0	0	0	0	0	0	0	0
Average	0	0	0	0	0	0	0	0	0
Standard deviation	0	0	0	0	0	0	0	0	0

G4B(www.g4b.go.kr)진위확인코드 : mul2jn1x3RU=

IV. TO BE CONTINUED

- **de-Ballasting (5th cycle : 2013. 07. 09)** - Basic water parameter

Test Item	Control water			Treated water		
	B	M	E	B	M	E
Water temperature (℃)	26.04	26.22	26.18	25.74	25.76	25.71
	25.64	25.79	26.09	25.35	25.22	25.33
	25.75	25.92	25.88	25.25	25.21	25.39
Average	25.81	25.98	26.05	25.45	25.40	25.48
Standard deviation	0.21	0.22	0.15	0.26	0.31	0.20
pH	7.55	7.52	7.51	7.65	7.59	7.59
	7.54	7.53	7.54	7.61	7.62	7.60
	7.54	7.53	7.55	7.60	7.59	7.61
Average	7.54	7.53	7.53	7.62	7.60	7.60
Standard deviation	0.01	0.01	0.02	0.03	0.02	0.01
ORP (mV)	258	293	290	212	216	193
	260	286	284	203	206	191
	261	281	279	199	203	193
Average	260	287	284	205	208	192
Standard deviation	2	6	6	7	7	1
Salinity (PSU)	33.10	33.35	33.31	33.54	33.65	33.45
	33.58	33.55	33.43	33.62	33.74	33.61
	33.48	32.16	33.64	33.58	33.72	33.68
Average	33.39	33.02	33.46	33.58	33.70	33.58
Standard deviation	0.25	0.75	0.17	0.04	0.05	0.12
DO (mg/L)	5.72	5.70	5.80	6.69	6.64	6.70
	5.74	5.76	5.76	6.75	6.76	6.73
	5.66	5.85	5.81	6.73	6.74	6.71
Average	5.71	5.77	5.79	6.72	6.71	6.71
Standard deviation	0.04	0.08	0.03	0.03	0.06	0.02
Turbidity (NTU)	2.95	3.04	2.98	3.25	3.44	3.75
	2.89	2.97	2.95	3.08	3.39	3.21
	2.99	2.65	2.90	2.85	3.55	3.02
Average	2.94	2.89	2.94	3.06	3.46	3.33
Standard deviation	0.05	0.21	0.04	0.20	0.08	0.38
TSS (mg/L)	20.8	19.2	21.6	24.8	24.8	25.2
	19.2	20.4	23.6	24.4	23.6	23.2
	22.8	20.8	24.0	25.6	26.0	25.6
Average	20.9	20.1	23.1	24.9	24.8	24.7
Standard deviation	1.80	0.83	1.29	0.61	1.20	1.29
DOC (mg/L)	1.70	1.73	1.45	3.95	4.05	4.12
TOC (mg/L)	0.93	0.53	0.96	2.68	2.92	2.51

G4B(www.g4b.go.kr)진위확인코드 : mul2inlx3RU=

IV. TO BE CONTINUED

- **de-Ballasting (5th cycle : 2013. 07. 09)** - Viable organisms

Test Item	Control water			Treated water		
	B	M	E	B	M	E
≥ 50 μm (inds/m³)	14 000	17 000	16 500	0*	0	0
	20 000	15 500	24 500			
	20 000	23 500	19 500			
Average	18 000	18 667	20 167			
Standard deviation	3 464	4 252	4 041			
≥ 10 - 50 μm (inds/mL)	348	283	230	0	0	1
	319	193	258	0	0	0
	340	222	229	0	0	0
Average	336	233	239	0	0	1
Standard deviation	15	46	16	0	0	1

* Analysed entire sample volume

- **de-Ballasting (5th cycle : 2013. 07. 09)** - Bacteria

Test Item	Control water			Treated water		
	B	M	E	B	M	E
Heterotrophic bacteria (CFU/mL)	11 700	15 200	11 700	2 580	960	2 530
	10 500	19 300	13 700	2 040	970	2 390
	15 400	16 900	11 900	2 450	920	2 970
Average	12 534	17 134	12 434	2 357	950	2 630
Standard deviation	2 554	2 060	1 102	282	26	303
Coliform (CFU/100 mL)	12	4	6	0	0	0
	4	0	6	0	0	0
	6	0	0	0	0	0
Average	8	2	4	0	0	0
Standard deviation	4	2	3	0	0	0
Escherichia coli (CFU/100 mL)	0	0	0	0	0	0
	0	0	0	0	0	0
	0	0	0	0	0	0
Average	0	0	0	0	0	0
Standard deviation	0	0	0	0	0	0
Intestinal Enterococci (CFU/100 mL)	2	2	4	1	0	0
	2	0	4	0	0	0
	2	2	6	1	0	0
Average	2	2	5	1	0	0
Standard deviation	0	1	1	1	0	0
Toxicogenic *Vibrio cholerae* (O1, O139) (CFU/100 mL)	0	0	0	0	0	0
	0	0	0	0	0	0
	0	0	0	0	0	0
Average	0	0	0	0	0	0
Standard deviation	0	0	0	0	0	0

G4B(www.g4b.go.kr)진위확인코드 : mut2jn1x3RU=

IV. TO BE CONTINUED

- **Ballasting (6th cycle : 2013. 07. 11)** - Basic water parameter

Test Item	Test water			Control water			Treated water		
	B	M	E	B	M	E	B	M	E
Water temperature (℃)	25.11	24.74	24.63	24.83	24.56	25.04	24.86	24.90	24.94
	24.91	24.57	24.55	24.83	24.58	24.95	24.85	24.79	24.89
	24.91	24.67	24.63	24.86	24.61	25.00	24.71	24.97	24.96
Average	24.98	24.66	24.60	24.84	24.58	25.00	24.81	24.89	24.93
Standard deviation	0.12	0.09	0.05	0.02	0.03	0.05	0.08	0.09	0.04
pH	8.25	8.22	8.21	8.26	8.25	8.25	7.89	7.82	7.70
	8.24	8.23	8.24	8.26	8.25	8.25	7.93	7.79	7.68
	8.25	8.23	8.23	8.26	8.25	8.25	7.95	7.74	7.66
Average	8.25	8.23	8.23	8.26	8.25	8.25	7.92	7.78	7.68
Standard deviation	0.01	0.01	0.02	0.00	0.00	0.00	0.03	0.04	0.02
ORP (mV)	240	520	493	242	499	450	787	801	813
	241	516	473	242	487	433	780	814	822
	242	509	467	242	475	420	794	818	826
Average	241	515	478	242	487	434	787	811	820
Standard deviation	1	6	14	0	12	15	7	9	7
Salinity (PSU)	20.86	20.88	20.82	20.88	20.91	20.77	20.82	20.93	20.89
	20.88	20.93	20.90	20.90	20.93	20.80	20.78	20.93	20.92
	20.89	20.91	20.88	20.90	20.93	20.78	20.84	20.92	20.81
Average	20.88	20.91	20.87	20.89	20.92	20.78	20.81	20.93	20.87
Standard deviation	0.02	0.03	0.04	0.01	0.01	0.02	0.03	0.01	0.06
DO (mg/L)	7.34	7.34	7.35	7.37	7.35	7.32	7.40	7.34	7.35
	7.37	7.33	7.36	7.37	7.35	7.35	7.41	7.38	7.36
	7.36	7.33	7.35	7.35	7.35	7.35	7.44	7.36	7.37
Average	7.36	7.33	7.35	7.36	7.35	7.34	7.42	7.36	7.36
Standard deviation	0.02	0.01	0.01	0.01	0.00	0.02	0.02	0.02	0.01
Turbidity (NTU)	18.5	16.0	16.0	16.6	18.9	18.2	16.1	16.6	16.4
	17.9	17.8	17.0	15.7	16.3	16.9	15.7	14.7	14.2
	17.6	17.9	16.1	16.2	15.7	15.9	13.8	15.1	17.3
Average	18.0	17.2	16.4	16.2	17.0	17.0	15.2	15.5	16.0
Standard deviation	0.46	1.07	0.55	0.45	1.70	1.15	1.23	1.00	1.59
TSS (mg/L)	70.4	67.2	68.0	66.4	64.8	72.4	62.0	64.4	64.8
	68.0	65.2	62.8	64.4	60.4	67.6	60.8	61.6	64.0
	64.8	66.4	59.6	64.4	62.8	66.0	60.0	64.0	63.2
Average	67.7	66.3	63.5	65.1	62.7	68.7	60.9	63.3	64.0
Standard deviation	2.81	1.01	4.24	1.15	2.20	3.33	1.01	1.51	0.80
DOC (mg/L)	7.46	7.58	7.59	7.52	7.61	7.54	7.57	7.65	7.43
TOC (mg/L)	13.9	14.6	13.0	12.2	14.3	16.0	15.6	16.9	15.4

G4B(www.g4b.go.kr)진위확인코드 : mul2jn1x3RU=

IV. TO BE CONTINUED

- **Ballasting (6th cycle : 2013. 07. 11)** - Viable organisms

Test Item	Test water			Control water			Treated water		
	B	M	E	B	M	E	B	M	E
≥ 50 μm (inds/m³)	127 500	109 500	115 000	104 000	112 500	89 500	4 600	4 200	3 000
	115 000	134 000	104 000	116 000	97 500	97 000	3 800	3 800	4 000
	113 000	117 000	131 000	103 500	92 500	88 000	2 800	5 000	2 200
Average	118 500	120 167	116 667	107 834	100 834	91 500	3 734	4 334	3 067
Standard deviation	6 416	10 250	11 086	5 778	8 498	3 937	736	499	736
≥ 10 - 50 μm (inds/mL)	1 073	965	1 754	1 061	1 006	1 112	0	1	0
	1 104	969	1 361	1 237	1 069	1 224	0	0	0
	976	951	1 258	1 140	1 054	1 239	0	0	0
Average	1 051	962	1 458	1 146	1 043	1 192	0	1	0
Standard deviation	67	9	262	88	33	69	0	1	0

- **Ballasting (6th cycle : 2013. 07. 11)** - Bacteria

Test Item	Test water			Control water			Treated water		
	B	M	E	B	M	E	B	M	E
Heterotrophic bacteria (CFU/mL)	20 500	18 400	15 600	11 000	12 200	19 400	0	0	0
	17 000	21 400	16 000	20 600	12 700	16 600	0	0	0
	12 500	14 700	12 900	14 100	11 400	17 400	0	0	0
Average	16 667	18 167	14 834	15 234	12 100	17 800	0	0	0
Standard deviation	4 010	3 356	1 686	4 899	656	1 442	0	0	0
Coliform (CFU/100 mL)	TNTC*	TNTC	TNTC	TNTC	TNTC	TNTC	0	0	0
	TNTC	TNTC	TNTC	TNTC	TNTC	TNTC	0	0	0
	TNTC	TNTC	TNTC	TNTC	TNTC	TNTC	0	0	0
Average	TNTC	TNTC	TNTC	TNTC	TNTC	TNTC	0	0	0
Standard deviation	0	0	0	0	0	0	0	0	0
Escherichia coli (CFU/100 mL)	2	0	0	2	0	0	0	0	0
	0	0	0	0	0	0	0	0	0
	0	0	0	0	0	0	0	0	0
Average	1	0	0	1	0	0	0	0	0
Standard deviation	1	0	0	1	0	0	0	0	0
Intestinal Enterococci (CFU/100 mL)	6	278	232	28	12	14	0	0	0
	16	238	220	112	28	30	0	0	0
	28	204	210	120	38	26	0	0	0
Average	17	240	221	87	26	24	0	0	0
Standard deviation	11	37	11	51	13	8	0	0	0
Toxicogenic *Vibrio cholerae* (O1, O139) (CFU/100 mL)	0	0	0	0	0	0	0	0	0
	0	0	0	0	0	0	0	0	0
	0	0	0	0	0	0	0	0	0
Average	0	0	0	0	0	0	0	0	0
Standard deviation	0	0	0	0	0	0	0	0	0

* Too Numerous To Count

G4B(www.g4b.go.kr)전위확인코드 : muf2jn1x3RU=

IV. TO BE CONTINUED

- **de-Ballasting (6th cycle : 2013. 07. 16)** - Basic water parameter

Test Item	Control water			Treated water		
	B	M	E	B	M	E
Water temperature (℃)	26.52	26.58	26.64	26.76	26.63	26.65
	26.49	26.50	26.68	26.47	26.54	26.65
	26.48	26.49	26.65	26.48	26.54	26.59
Average	26.50	26.52	26.66	26.57	26.57	26.63
Standard deviation	0.02	0.05	0.02	0.16	0.05	0.03
pH	7.22	7.21	7.19	7.34	7.44	7.45
	7.24	7.25	7.24	7.40	7.49	7.46
	7.26	7.24	7.24	7.42	7.49	7.46
Average	7.24	7.23	7.22	7.39	7.47	7.46
Standard deviation	0.02	0.02	0.03	0.04	0.03	0.01
ORP (mV)	286	310	301	256	274	262
	276	292	290	220	234	230
	272	283	285	214	219	219
Average	278	295	292	230	242	237
Standard deviation	7	14	8	23	28	22
Salinity (PSU)	20.88	20.91	20.79	20.95	20.92	20.68
	20.90	20.92	20.67	20.95	20.94	20.74
	20.93	20.92	20.73	20.95	20.96	20.75
Average	20.90	20.92	20.73	20.95	20.94	20.72
Standard deviation	0.03	0.01	0.06	0.00	0.02	0.04
DO (mg/L)	6.48	6.60	6.41	7.15	7.12	7.09
	6.51	6.59	6.30	7.20	7.11	7.08
	6.56	6.55	6.32	7.19	7.12	7.06
Average	6.52	6.58	6.34	7.18	7.12	7.08
Standard deviation	0.04	0.03	0.06	0.03	0.01	0.02
Turbidity (NTU)	18.7	19.4	19.9	17.2	17.3	18.5
	19.4	19.4	19.2	18.1	17.3	17.4
	19.0	18.8	18.8	18.6	16.9	17.4
Average	19.0	19.2	19.3	18.0	17.2	17.8
Standard deviation	0.35	0.35	0.56	0.71	0.23	0.64
TSS (mg/L)	59.6	61.6	63.2	67.6	63.2	60.8
	58.8	62.4	62.8	68.4	63.2	65.6
	62.4	64.0	66.0	69.6	63.2	64.8
Average	60.3	62.7	64.0	68.5	63.2	63.7
Standard deviation	1.89	1.22	1.74	1.01	0.00	2.57
DOC (mg/L)	5.31	5.29	5.42	8.10	8.04	9.65
TOC (mg/L)	13.7	10.4	11.5	14.6	16.0	0.88

G4B(www.g4b.go.kr)진위확인코드 : mul2jn1x3RU=

IV. TO BE CONTINUED

- **de-Ballasting (6th cycle : 2013. 07. 16)** - Viable organisms

Test Item	Control water			Treated water		
	B	M	E	B	M	E
≥ 50 μm (inds/m³)	0	500	1 000	0*	0	0
	500	500	500			
	500	1 500	1 500			
Average	333	833	1 000			
Standard deviation	289	577	500			
≥ 10 - 50 μm (inds/mL)	548	434	330	0	0	0
	504	467	416	0	0	0
	497	414	463	0	0	0
Average	517	439	403	0	0	0
Standard deviation	28	27	67	0	0	0

* Analysed entire sample volume

- **de-Ballasting (6th cycle : 2013. 07. 16)** - Bacteria

Test Item	Control water			Treated water		
	B	M	E	B	M	E
Heterotrophic bacteria (CFU/mL)	43 600	59 200	64 000	2 440	3 230	4 710
	67 200	69 600	50 800	2 420	2 980	4 520
	60 800	64 000	35 600	2 590	3 120	4 980
Average	57 200	64 267	50 134	2 484	3 110	4 737
Standard deviation	12 205	5 205	14 212	14	177	134
Coliform (CFU/100 mL)	0	0	0	0	0	0
	0	0	0	0	0	0
	0	0	0	0	0	0
Average	0	0	0	0	0	0
Standard deviation	0	0	0	0	0	0
Escherichia coli (CFU/100 mL)	0	0	0	0	0	0
	0	0	0	0	0	0
	0	0	0	0	0	0
Average	0	0	0	0	0	0
Standard deviation	0	0	0	0	0	0
Intestinal Enterococci (CFU/100 mL)	TNTC*	TNTC	TNTC	43	6	1
	TNTC	TNTC	TNTC	50	2	1
	TNTC	TNTC	TNTC	64	2	0
Average	TNTC	TNTC	TNTC	47	4	1
Standard deviation	0	0	0	11	2	1
Toxicogenic *Vibrio cholerae* (O1 O139) (CFU/100 mL)	0	0	0	0	0	0
	0	0	0	0	0	0
	0	0	0	0	0	0
Average	0	0	0	0	0	0
Standard deviation	0	0	0	0	0	0

* Too Numerous To Count

G4B(www.g4b.go.kr)진위확인코드 : mul2jn1x3RU=

IV. TO BE CONTINUED

- **Ballasting (7th cycle : 2013. 07. 18)** - Basic water parameter

Test Item	Test water			Control water			Treated water		
	B	M	E	B	M	E	B	M	E
Water temperature (℃)	26.03	26.19	26.14	26.10	26.94	26.19	26.12	25.90	25.98
	26.01	25.97	25.99	26.17	27.50	26.18	26.21	25.75	26.03
	25.96	25.95	25.99	26.23	26.82	26.24	26.25	25.76	26.37
Average	26.00	26.04	26.04	26.17	27.09	26.20	26.23	25.80	26.13
Standard deviation	0.04	0.13	0.09	0.07	0.36	0.03	0.12	0.08	0.21
pH	7.96	7.91	7.91	8.00	7.95	7.95	7.72	7.48	7.44
	7.96	7.93	7.92	7.99	7.96	7.95	7.71	7.46	7.43
	7.97	7.94	7.93	8.00	7.96	7.96	7.72	7.45	7.49
Average	7.96	7.93	7.92	8.00	7.96	7.95	7.72	7.46	7.45
Standard deviation	0.01	0.02	0.01	0.01	0.01	0.01	0.01	0.02	0.03
ORP (mV)	326	652	681	312	608	642	778	816	793
	320	639	666	309	591	629	779	826	823
	316	630	654	306	572	619	789	830	832
Average	321	640	667	309	590	630	782	824	816
Standard deviation	5	11	14	3	18	12	6	7	20
Salinity (PSU)	20.75	20.82	20.86	20.72	20.29	20.72	20.80	20.93	20.83
	20.85	20.89	20.93	20.73	20.03	20.75	20.76	20.95	20.80
	20.82	20.89	20.91	20.72	20.46	20.75	20.70	20.94	20.64
Average	20.81	20.87	20.90	20.72	20.26	20.74	20.75	20.94	20.76
Standard deviation	0.05	0.04	0.04	0.01	0.22	0.02	0.05	0.01	0.10
DO (mg/L)	7.23	7.23	7.22	7.27	7.21	7.26	7.31	7.29	7.27
	7.26	7.26	7.26	7.27	7.16	7.26	7.31	7.31	7.28
	7.26	7.26	7.25	7.25	7.23	7.24	7.32	7.32	7.24
Average	7.25	7.25	7.24	7.26	7.20	7.25	7.31	7.31	7.26
Standard deviation	0.02	0.02	0.02	0.01	0.04	0.01	0.01	0.02	0.02
Turbidity (NTU)	14.6	17.4	17.9	15.9	18.2	15.4	15.0	16.7	14.8
	16.2	16.5	18.7	15.2	19.6	15.1	16.5	15.6	14.6
	15.7	16.0	15.8	15.4	17.0	13.1	15.7	14.2	13.2
Average	15.5	16.6	17.5	15.5	18.3	14.5	15.7	15.5	14.2
Standard deviation	0.82	0.71	1.50	0.36	1.30	1.25	0.75	1.25	0.87
TSS (mg/L)	62.4	63.2	62.0	63.2	57.2	65.6	61.6	54.8	64.0
	57.6	65.2	64.4	64.4	67.6	64.8	64.0	57.2	66.0
	62.0	65.6	63.6	67.6	57.2	67.2	62.8	59.6	61.2
Average	60.7	64.7	63.3	65.1	60.7	65.9	62.8	57.2	63.7
Standard deviation	2.66	1.29	1.22	2.27	6.00	1.22	1.20	2.40	2.41
DOC (mg/L)	7.33	7.36	7.35	7.49	7.38	7.47	7.48	7.43	7.53
TOC (mg/L)	6.17	7.51	10.4	13.5	16.7	11.3	13.6	14.3	15.2

G4B(www.g4b.go.kr)진위확인코드 : mul2jn1x3RU=

IV. TO BE CONTINUED

- **Ballasting (7th cycle : 2013. 07. 18)** - Viable organisms

Test Item	Test water			Control water			Treated water		
	B	M	E	B	M	E	B	M	E
≥ 50 μm (inds/m³)	233 000	205 000	258 000	184 000	197 000	232 000	30 150	29 850	30 300
	226 000	181 000	225 000	162 000	194 000	253 000	36 300	28 500	32 100
	242 000	202 000	218 000	182 000	197 000	242 000	33 750	32 550	33 000
Average	233 667	196 000	233 667	176 000	196 000	242 334	33 400	30 300	31 800
Standard deviation	6 549	10 677	17 442	12 166	1 732	10 504	2 523	1 684	1 122
≥ 10 - 50 μm (inds/mL)	1 066	923	1 215	832	1 061	1 197	0	0	0
	918	1 027	1 497	755	987	929	0	0	0
	1 059	1 037	1 106	740	1 015	1 229	0	0	0
Average	1 015	996	1 273	776	1 021	1 119	0	0	0
Standard deviation	84	63	202	49	37	165	0	0	0

- **Ballasting (7th cycle : 2013. 7. 18)** - Bacteria

Test Item	Test water			Control water			Treated water		
	B	M	E	B	M	E	B	M	E
Heterotrophic bacteria (CFU/mL)	11 900	11 400	12 000	12 700	5 800	9 000	30	0	10
	8 700	8 900	11 400	10 800	4 800	9 300	0	0	0
	15 300	12 100	21 900	11 600	5 200	9 600	0	0	0
Average	11 967	10 800	15 100	11 700	5 267	9 300	10	0	4
Standard deviation	3 301	1 682	5 897	954	503	300	17	0	6
Coliform (CFU/100 mL)	TNTC*	TNTC	TNTC	TNTC	TNTC	TNTC	0	0	0
	TNTC	TNTC	TNTC	TNTC	TNTC	TNTC	0	0	0
	TNTC	TNTC	TNTC	TNTC	TNTC	TNTC	0	0	0
Average	TNTC	TNTC	TNTC	TNTC	TNTC	TNTC	0	0	0
Standard deviation	0	0	0	0	0	0	0	0	0
Escherichia coli (CFU/100 mL)	TNTC	TNTC	TNTC	0	0	0	0	0	0
	TNTC	TNTC	TNTC	0	0	0	0	0	0
	TNTC	TNTC	TNTC	0	0	0	0	0	0
Average	TNTC	TNTC	TNTC	0	0	0	0	0	0
Standard deviation	0	0	0	0	0	0	0	0	0
Intestinal Enterococci (CFU/100 mL)	TNTC	TNTC	TNTC	TNTC	TNTC	6	0	0	0
	TNTC	TNTC	TNTC	TNTC	TNTC	4	0	0	0
	TNTC	TNTC	TNTC	TNTC	TNTC	10	0	0	0
Average	TNTC	TNTC	TNTC	TNTC	TNTC	7	0	0	0
Standard deviation	0	0	0	0	0	3	0	0	0
Toxicogenic *Vibrio cholerae* (O1, O139) (CFU/100 mL)	0	0	0	0	0	0	0	0	0
	0	0	0	0	0	0	0	0	0
	0	0	0	0	0	0	0	0	0
Average	0	0	0	0	0	0	0	0	0
Standard deviation	0	0	0	0	0	0	0	0	0

* Too Numerous To Count

G4B(www.g4b.go.kr)진위확인코드 : mul2jn1x3RU=

IV. TO BE CONTINUED

- **de-Ballasting (7th cycle : 2013. 07. 23)** - Basic water parameter

Test Item	Control water			Treated water		
	B	M	E	B	M	E
Water temperature (℃)	27.24	27.31	27.32	27.20	27.35	26.94
	27.10	27.10	27.05	27.05	27.01	26.93
	26.98	27.03	27.14	27.01	26.93	26.92
Average	27.11	27.15	27.17	27.09	27.10	26.93
Standard deviation	0.13	0.15	0.14	0.10	0.22	0.01
pH	7.01	7.07	7.12	7.15	7.28	7.19
	7.02	7.06	7.06	7.23	7.25	7.26
	7.01	7.05	7.08	7.24	7.26	7.27
Average	7.01	7.06	7.09	7.21	7.26	7.24
Standard deviation	0.01	0.01	0.03	0.05	0.02	0.04
ORP (mV)	272	271	278	329	219	332
	258	261	266	282	206	305
	240	243	252	257	206	267
Average	257	258	265	289	210	301
Standard deviation	16	14	13	37	8	33
Salinity (PSU)	20.19	20.00	19.57	20.86	20.85	20.89
	20.43	20.39	20.43	20.98	21.00	20.91
	20.70	20.53	20.10	20.99	21.02	20.94
Average	20.44	20.31	20.03	20.94	20.96	20.91
Standard deviation	0.26	0.27	0.43	0.07	0.09	0.03
DO (mg/L)	5.94	6.10	6.16	7.07	7.05	7.08
	6.05	6.14	6.11	7.11	7.16	7.08
	6.06	6.14	6.13	7.10	7.16	7.09
Average	6.02	6.13	6.13	7.09	7.12	7.08
Standard deviation	0.07	0.02	0.03	0.02	0.06	0.01
Turbidity (NTU)	18.9	19.1	18.3	14.8	16.2	16.2
	18.3	19.7	18.9	15.8	16.8	14.9
	18.2	17.7	18.6	15.5	15.5	13.4
Average	18.5	18.8	18.6	15.4	16.2	14.8
Standard deviation	0.38	1.03	0.30	0.51	0.65	1.40
TSS (mg/L)	51.6	59.6	60.0	62.4	60.0	57.6
	58.8	56.8	57.2	63.2	60.8	62.0
	56.0	53.2	58.4	61.2	61.6	61.2
Average	55.5	56.5	58.5	62.3	60.8	60.3
Standard deviation	3.63	3.21	1.40	1.01	0.80	2.34
DOC (mg/L)	5.03	4.99	4.98	7.91	8.01	7.95
TOC (mg/L)	11.7	12.4	13.0	14.8	14.0	13.4

G4B(www.g4b.go.kr)진위확인코드 : mul2jn1x3RU=

IV. TO BE CONTINUED

- **de-Ballasting (7th cycle : 2013. 07. 23)** - Viable organisms

Test Item	Control water			Treated water		
	B	M	E	B	M	E
≥ 50 μm (inds/m³)	20 500	19 000	28 500	0*	0	0
	17 000	19 000	22 500			
	22 500	25 500	24 000			
Average	20 000	21 167	25 000			
Standard deviation	2 784	3 753	3 122			
≥ 10 - 50 μm (inds/mL)	428	798	354	0	0	0
	482	831	469	0	0	0
	355	683	445	0	0	0
Average	422	771	423	0	0	0
Standard deviation	64	78	61	0	0	0

* Analysed entire sample volume

- **de-Ballasting (7th cycle : 2013. 07. 23)** - Bacteria

Test Item	Control water			Treated water		
	B	M	E	B	M	E
Heterotrophic bacteria (CFU/mL)	TNTC*	TNTC	TNTC	1 960	2 930	1 620
	TNTC	TNTC	TNTC	2 530	1 520	1 870
	TNTC	TNTC	TNTC	2 640	1 680	1 830
Average	TNTC	TNTC	TNTC	2 377	2 044	1 774
Standard deviation	0	0	0	365	772	134
Coliform (CFU/100 mL)	0	0	0	0	0	0
	0	0	0	0	0	0
	0	0	0	0	0	0
Average	0	0	0	0	0	0
Standard deviation	0	0	0	0	0	0
Escherichia coli (CFU/100 mL)	0	0	0	0	0	0
	0	0	0	0	0	0
	0	0	0	0	0	0
Average	0	0	0	0	0	0
Standard deviation	0	0	0	0	0	0
Intestinal Enterococci (CFU/100 mL)	TNTC	TNTC	TNTC	1	0	0
	TNTC	TNTC	TNTC	3	0	0
	TNTC	TNTC	TNTC	0	0	0
Average	TNTC	TNTC	TNTC	2	0	0
Standard deviation	0	0	0	2	0	0
Toxicogenic *Vibrio cholerae* (O1, O139) (CFU/100 mL)	0	0	0	0	0	0
	0	0	0	0	0	0
	0	0	0	0	0	0
Average	0	0	0	0	0	0
Standard deviation	0	0	0	0	0	0

* Too Numerous To Count

G4B(www.g4b.go.kr)진위확인코드 : mul2in1x3RU=

IV. TO BE CONTINUED

- **Ballasting (8th cycle : 2013. 07. 25)** - Basic water parameter

Test Item	Test water			Control water			Treated water		
	B	M	E	B	M	E	B	M	E
Water temperature (℃)	25.74	25.39	25.41	25.18	25.02	25.17	25.62	25.03	25.31
	25.35	25.10	25.45	25.19	24.94	25.18	25.48	24.92	25.30
	25.33	25.09	25.51	25.12	25.01	25.25	25.74	24.95	25.18
Average	25.47	25.19	25.46	25.16	24.99	25.20	25.61	24.97	25.26
Standard deviation	0.23	0.17	0.05	0.04	0.04	0.04	0.13	0.06	0.07
pH	8.12	8.12	8.14	8.13	8.14	8.16	7.92	7.74	7.71
	8.13	8.13	8.15	8.14	8.15	8.16	7.95	7.75	7.71
	8.13	8.14	8.14	8.14	8.15	8.16	7.97	7.75	7.69
Average	8.13	8.13	8.14	8.14	8.15	8.16	7.95	7.75	7.70
Standard deviation	0.01	0.01	0.01	0.01	0.01	0.00	0.03	0.01	0.01
ORP (mV)	294	654	471	278	611	445	759	825	781
	286	637	462	274	604	436	806	828	807
	281	623	455	272	597	431	807	830	816
Average	287	638	463	275	604	437	791	828	801
Standard deviation	7	16	8	3	7	7	27	3	18
Salinity (PSU)	20.94	21.20	21.28	21.23	21.26	21.25	21.15	21.24	21.30
	21.10	21.28	21.29	21.22	21.26	21.26	21.15	21.28	21.30
	21.12	21.28	21.29	21.24	21.24	21.26	21.06	21.27	21.29
Average	21.05	21.25	21.29	21.23	21.25	21.26	21.12	21.26	21.30
Standard deviation	0.10	0.05	0.01	0.01	0.01	0.01	0.05	0.02	0.01
DO (mg/L)	7.16	7.19	7.20	7.24	7.26	7.25	7.25	7.26	7.24
	7.24	7.24	7.16	7.24	7.25	7.26	7.29	7.26	8.09
	7.24	7.25	7.19	7.26	7.24	7.26	7.27	7.26	8.17
Average	7.21	7.23	7.18	7.25	7.25	7.26	7.27	7.26	7.83
Standard deviation	0.05	0.03	0.02	0.01	0.01	0.01	0.02	0.00	0.52
Turbidity (NTU)	15.2	18.0	17.1	15.0	16.3	17.2	18.8	15.2	19.7
	16.6	17.4	16.2	13.9	16.2	17.7	17.2	17.1	15.5
	14.8	18.6	14.5	12.1	15.0	17.1	11.8	15.6	11.4
Average	15.5	18.0	15.9	13.7	15.8	17.3	15.9	16.0	15.5
Standard deviation	0.95	0.60	1.32	1.46	0.72	0.32	3.67	1.00	4.15
TSS (mg/L)	59.6	61.2	64.4	58.8	55.2	60.0	64.0	54.4	99.2
	60.0	61.6	60.0	58.0	58.0	60.4	64.4	56.0	85.6
	60.4	60.8	60.0	65.6	57.2	62.0	67.2	57.2	86.4
Average	60.0	61.2	61.5	60.8	56.8	60.8	65.2	55.9	90.4
Standard deviation	0.40	0.40	2.54	4.18	1.44	1.06	1.74	1.40	7.63
DOC (mg/L)	7.08	7.43	7.25	7.39	7.58	7.60	7.36	7.39	7.46
TOC (mg/L)	14.8	13.3	11.7	9.75	11.5	13.3	13.5	13.8	15.7

G4B(www.g4b.go.kr)진위확인코드 : muf2jn1x3AU=

IV. TO BE CONTINUED

- **Ballasting (8th cycle : 2013. 07. 25)** - Viable organisms

Test Item	Test water			Control water			Treated water		
	B	M	E	B	M	E	B	M	E
≥ 50 μm (inds/m³)	305 000	307 000	268 000	241 000	219 000	166 000	24 075	19 275	25 275
	271 000	304 000	277 000	269 000	224 000	178 000	21 675	21 300	26 850
	339 000	277 000	308 000	257 000	244 000	212 000	22 800	20 175	30 600
Average	305 000	296 000	284 334	255 667	229 000	185 334	22 850	20 250	27 575
Standard deviation	27 761	13 491	17 133	11 470	10 801	19 482	980	828	2 234
≥ 10 - 50 μm (inds/mL)	957	1 026	1 214	860	983	905	0	0	0
	948	899	1 116	714	817	936	0	0	0
	1 264	862	966	918	953	873	0	1	0
Average	1 057	929	1 099	831	918	905	0	1	0
Standard deviation	180	86	125	105	88	32	0	1	0

- **Ballasting (8th cycle : 2013. 07. 25)** - Bacteria

Test Item	Test water			Control water			Treated water		
	B	M	E	B	M	E	B	M	E
Heterotrophic bacteria (CFU/mL)	18 900	24 900	21 800	TNTC*	TNTC	TNTC	0	0	0
	17 100	29 200	25 700	TNTC	TNTC	TNTC	0	0	0
	18 200	29 200	25 200	TNTC	TNTC	TNTC	0	0	0
Average	18 067	27 767	24 234	TNTC	TNTC	TNTC	0	0	0
Standard deviation	907	2 483	2 122	0	0	0	0	0	0
Coliform (CFU/100 mL)	TNTC	TNTC	TNTC	TNTC	TNTC	TNTC	0	0	0
	TNTC	TNTC	TNTC	TNTC	TNTC	TNTC	0	0	0
	TNTC	TNTC	TNTC	TNTC	TNTC	TNTC	0	0	0
Average	TNTC	TNTC	TNTC	TNTC	TNTC	TNTC	0	0	0
Standard deviation	0	0	0	0	0	0	0	0	0
Escherichia coli (CFU/100 mL)	14	2	0	2	6	8	0	0	0
	14	2	4	0	8	8	0	0	0
	8	0	8	0	4	0	0	0	0
Average	12	2	4	1	6	6	0	0	0
Standard deviation	4	1	4	1	2	5	0	0	0
Intestinal Enterococci (CFU/100 mL)	TNTC	TNTC	TNTC	TNTC	TNTC	TNTC	0	1	4
	TNTC	TNTC	TNTC	TNTC	TNTC	TNTC	0	1	4
	TNTC	TNTC	TNTC	TNTC	TNTC	TNTC	0	1	4
Average	TNTC	TNTC	TNTC	TNTC	TNTC	TNTC	0	1	4
Standard deviation	0	0	0	0	0	0	0	0	0
Toxicogenic *Vibrio cholerae* (O1, O139) (CFU/100 mL)	0	0	0	0	0	0	0	0	0
	0	0	0	0	0	0	0	0	0
	0	0	0	0	0	0	0	0	0
Average	0	0	0	0	0	0	0	0	0
Standard deviation	0	0	0	0	0	0	0	0	0

* Too Numerous To Count

G4B(www.g4b.go.kr)진위확인코드 : mul2jn1x3RU=

IV. TO BE CONTINUED

- **de-Ballasting (8th cycle : 2013. 07. 30)** - Basic water parameter

Test Item	Control water			Treated water		
	B	M	E	B	M	E
Water temperature (℃)	26.86	26.82	27.11	26.81	26.92	26.59
	27.02	26.75	26.72	26.86	26.79	26.56
	26.96	26.73	26.78	26.80	26.78	26.56
Average	26.95	26.77	26.87	26.82	26.83	26.57
Standard deviation	0.08	0.05	0.21	0.03	0.08	0.02
pH	6.90	6.94	6.94	7.23	7.28	7.28
	6.92	6.90	6.97	7.25	7.29	7.30
	6.93	6.95	6.97	7.27	7.30	7.31
Average	6.92	6.93	6.96	7.25	7.29	7.30
Standard deviation	0.02	0.03	0.02	0.02	0.01	0.02
ORP (mV)	212	177	190	269	331	337
	189	160	164	349	315	320
	176	144	155	329	304	307
Average	192	160	170	316	317	321
Standard deviation	18	17	18	42	14	15
Salinity (PSU)	20.99	21.03	20.92	20.70	20.47	20.84
	20.97	21.14	21.13	20.79	20.69	20.94
	21.00	21.17	21.12	20.81	20.70	20.93
Average	20.99	21.11	21.06	20.77	20.62	20.90
Standard deviation	0.02	0.07	0.12	0.06	0.13	0.06
DO (mg/L)	6.09	6.17	6.12	7.23	7.21	7.24
	6.01	6.19	6.19	7.20	7.20	7.20
	6.93	6.24	6.12	7.19	7.20	7.17
Average	6.34	6.20	6.14	7.21	7.20	7.20
Standard deviation	0.51	0.04	0.04	0.02	0.01	0.04
Turbidity (NTU)	19.8	19.0	19.9	14.2	15.6	17.2
	18.7	19.9	19.0	16.4	16.8	16.9
	19.6	19.8	18.3	15.7	15.8	16.6
Average	19.4	19.6	19.1	15.4	16.1	16.9
Standard deviation	0.59	0.49	0.80	1.12	0.64	0.30
TSS (mg/L)	49.0	74.0	82.0	93.0	65.0	86.0
	70.0	72.0	75.0	75.0	81.0	82.0
	72.0	74.0	69.0	74.0	77.0	79.0
Average	63.7	73.3	75.3	80.7	74.3	82.3
Standard deviation	12.7	1.15	6.51	10.7	8.33	3.51
DOC (mg/L)	5.08	5.37	5.21	8.17	8.25	8.10
TOC (mg/L)	11.9	11.8	11.1	13.4	13.6	14.4

G4B(www.g4b.go.kr)진위확인코드 : mul2jn1x3RU=

IV. TO BE CONTINUED

- **de-Ballasting (8th cycle : 2013. 07. 30)** - Viable organisms

Test Item	Control water			Treated water		
	B	M	E	B	M	E
≥ 50 μm (inds/m³)	500	0	500	2*	1	0
	0	500	0			
	0	500	500			
Average	167	334	334			
Standard deviation	289	289	289			
≥ 10 - 50 μm (inds/mL)	704	529	291	0	0	0
	488	490	227	0	0	0
	495	379	248	0	0	0
Average	563	466	256	0	0	0
Standard deviation	123	78	33	0	0	0

* Analysed entire sample volume

- **de-Ballasting (8th cycle : 2013. 07. 30)** - Bacteria

Test Item	Control water			Treated water		
	B	M	E	B	M	E
Heterotrophic bacteria (CFU/mL)	14 500	19 200	29 500	3 670	1 860	360
	13 800	19 900	26 000	2 910	1 370	150
	12 700	20 800	23 400	2 960	1 880	210
Average	13 667	19 967	26 300	3 180	1 703	240
Standard deviation	907	802	3 061	425	289	108
Coliform (CFU/100 mL)	2	0	0	1	2	1
	0	0	0	1	0	0
	0	0	0	0	0	0
Average	1	0	0	1	1	1
Standard deviation	1	0	0	1	1	1
Escherichia coli (CFU/100 mL)	0	0	0	0	0	0
	0	0	0	0	0	0
	0	0	0	0	0	0
Average	0	0	0	0	0	0
Standard deviation	0	0	0	0	0	0
Intestinal Enterococci (CFU/100 mL)	TNTC*	TNTC	TNTC	34	36	22
	TNTC	TNTC	TNTC	45	44	3
	TNTC	TNTC	TNTC	37	25	4
Average	TNTC	TNTC	TNTC	39	35	10
Standard deviation	0	0	0	6	10	11
Toxicogenic *Vibrio cholerae* (O1, O139) (CFU/100 mL)	0	0	0	0	0	0
	0	0	0	0	0	0
	0	0	0	0	0	0
Average	0	0	0	0	0	0
Standard deviation	0	0	0	0	0	0

* Too Numerous To Count

G4B(www.g4b.go.kr)진위확인코드 : muf2in1x3RU=

IV. TO BE CONTINUED

- **Ballasting (9th cycle : 2013. 08. 08)** – Basic water parameter

Test Item	Test water			Control water			Treated water		
	B	M	E	B	M	E	B	M	E
Water temperature (℃)	27.93	27.39	27.42	27.41	27.46	27.33	27.59	27.32	27.44
	27.63	27.31	27.38	27.45	27.35	27.47	27.61	27.37	27.36
	27.61	27.43	27.30	27.51	27.37	27.30	27.54	27.42	27.51
Average	27.72	27.38	27.37	27.46	27.39	27.37	27.58	27.37	27.44
Standard deviation	0.18	0.06	0.06	0.05	0.06	0.09	0.04	0.05	0.08
pH	7.97	7.94	7.93	8.00	7.96	7.96	7.69	7.52	7.46
	7.98	7.95	7.94	8.00	7.97	7.96	7.64	7.51	7.43
	7.98	7.94	7.95	8.00	7.97	7.78	7.61	7.49	7.41
Average	7.98	7.94	7.94	8.00	7.97	7.90	7.65	7.51	7.43
Standard deviation	0.01	0.01	0.01	0.00	0.01	0.10	0.04	0.02	0.03
ORP (mV)	305	504	555	291	488	536	752	777	779
	298	499	547	289	484	522	772	797	806
	294	495	541	287	480	521	782	804	813
Average	299	499	548	289	484	526	769	793	799
Standard deviation	6	5	7	2	4	8	15	14	18
Salinity (PSU)	21.28	21.37	21.29	21.31	21.19	21.30	21.33	21.34	21.36
	21.32	21.37	21.35	21.29	21.30	21.26	21.34	21.33	21.37
	21.32	21.36	21.36	21.28	21.32	21.34	21.35	21.34	21.36
Average	21.31	21.37	21.33	21.29	21.27	21.30	21.34	21.34	21.36
Standard deviation	0.02	0.01	0.04	0.02	0.07	0.04	0.01	0.01	0.01
DO (mg/L)	7.04	7.07	7.08	7.08	7.07	7.06	7.13	7.17	7.08
	7.06	7.08	7.08	7.06	7.09	7.03	7.12	7.16	7.11
	7.05	7.07	7.07	7.07	7.09	7.06	7.15	7.15	7.07
Average	7.05	7.07	7.08	7.07	7.08	7.05	7.13	7.16	7.09
Standard deviation	0.01	0.01	0.01	0.01	0.01	0.02	0.02	0.01	0.02
Turbidity (NTU)	16.1	18.5	16.0	16.0	11.6	12.1	14.3	14.4	14.7
	15.8	16.5	17.6	14.3	13.5	17.2	15.3	14.3	14.8
	16.6	19.3	14.9	14.8	14.5	13.7	13.0	15.5	13.4
Average	16.2	18.1	16.2	15.0	13.2	14.3	14.2	14.7	14.3
Standard deviation	0.40	1.44	1.36	0.87	1.47	2.61	1.15	0.67	0.78
TSS (mg/L)	57.6	54.0	52.0	58.8	51.2	54.4	54.8	59.2	53.6
	53.2	53.2	58.0	57.6	46.4	48.4	56.4	57.6	54.4
	50.4	50.4	53.2	52.4	50.0	48.8	50.8	54.4	51.2
Average	53.7	52.5	54.4	56.3	49.2	50.5	54.0	57.1	53.1
Standard deviation	3.63	1.89	3.17	3.40	2.50	3.35	2.88	2.44	1.67
DOC (mg/L)	7.03	6.87	6.87	6.83	7.16	7.08	7.22	7.16	7.15
TOC (mg/L)	12.0	12.9	12.6	13.3	13.2	14.2	14.1	15.0	12.3

G4B(www.g4b.go.kr)진위확인코드 : mul2|n1x3RU=

IV. TO BE CONTINUED

- **Ballasting (9th cycle : 2013. 08. 08)** - Viable organisms

Test Item	Test water			Control water			Treated water		
	B	M	E	B	M	E	B	M	E
≥ 50 μm (inds/m^3)	272 000	238 000	276 000	266 000	205 000	214 000	17 700	19 000	17 500
	259 000	256 000	258 000	249 000	208 000	229 000	16 950	18 800	20 700
	287 000	233 000	272 000	252 000	204 000	226 000	15 050	18 750	16 500
Average	272 667	242 334	268 667	255 667	205 667	223 000	16 567	18 850	18 234
Standard deviation	11 441	9 877	7 717	7 409	1 700	6 481	1 115	108	1 791
≥ 10 - 50 μm (inds/mL)	1 362	1 350	1 388	1 172	973	953	1	0	0
	1 186	1 188	1 412	1 043	894	966	0	0	0
	1 081	1 345	1 161	944	914	918	0	0	0
Average	1 210	1 295	1 321	1 053	927	946	1	0	0
Standard deviation	142	92	139	114	41	25	1	0	0

- **Ballasting (9th cycle : 2013. 08. 08)** - Bacteria

Test Item	Test water			Control water			Treated water		
	B	M	E	B	M	E	B	M	E
Heterotrophic bacteria (CFU/mL)	10 500	10 100	11 000	11 200	10 900	10 000	0	0	0
	11 000	10 300	10 200	11 400	12 300	12 700	0	0	0
	10 900	10 100	10 500	9 700	10 800	9 700	0	0	0
Average	10 800	10 167	10 567	10 767	11 334	10 800	0	0	0
Standard deviation	265	115	404	929	839	1 652	0	0	0
Coliform (CFU/100 mL)	0	0	0	0	0	0	0	0	0
	0	0	0	0	0	0	0	0	0
	0	0	0	0	0	0	0	0	0
Average	0	0	0	0	0	0	0	0	0
Standard deviation	0	0	0	0	0	0	0	0	0
Escherichia coli (CFU/100 mL)	0	2	4	2	2	4	0	0	0
	0	2	0	2	2	4	0	0	0
	0	2	0	0	0	0	0	0	0
Average	0	2	2	2	2	3	0	0	0
Standard deviation	0	0	2	1	1	2	0	0	0
Intestinal Enterococci (CFU/100 mL)	TNTC*	TNTC	TNTC	TNTC	TNTC	TNTC	0	0	0
	TNTC	TNTC	TNTC	TNTC	TNTC	TNTC	0	0	0
	TNTC	TNTC	TNTC	TNTC	TNTC	TNTC	0	0	0
Average	TNTC	TNTC	TNTC	TNTC	TNTC	TNTC	0	0	0
Standard deviation	0	0	0	0	0	0	0	0	0
Toxicogenic *Vibrio cholerae* (O1, O139) (CFU/100 mL)	0	0	0	0	0	0	0	0	0
	0	0	0	0	0	0	0	0	0
	0	0	0	0	0	0	0	0	0
Average	0	0	0	0	0	0	0	0	0
Standard deviation	0	0	0	0	0	0	0	0	0

* Too Numerous To Count

G4B(www.g4b.go.kr)진위확인코드 : mul2jn1x3RU=

IV. TO BE CONTINUED

- **de-Ballasting (9th cycle : 2013. 08. 13)** - Basic water parameter

Test Item	Control water			Treated water		
	B	M	E	B	M	E
Water temperature (℃)	28.77	28.77	29.54	28.60	28.33	28.41
	28.56	28.64	28.90	28.53	28.32	28.41
	28.48	28.67	29.10	28.52	28.28	28.37
Average	28.60	28.69	29.18	28.55	28.31	28.40
Standard deviation	0.15	0.07	0.33	0.04	0.03	0.02
pH	6.90	6.90	7.00	7.30	7.26	7.30
	6.92	6.92	6.96	7.32	7.28	7.30
	6.94	6.94	7.00	7.33	7.31	7.32
Average	6.92	6.92	6.99	7.32	7.28	7.31
Standard deviation	0.02	0.02	0.02	0.02	0.03	0.01
ORP (mV)	361	331	345	350	348	344
	338	308	326	331	328	324
	320	293	309	320	315	311
Average	340	311	327	334	330	326
Standard deviation	21	19	18	15	17	17
Salinity (PSU)	21.18	21.10	20.38	21.25	21.28	21.17
	21.31	21.22	21.01	21.28	21.35	21.24
	21.32	21.17	20.78	21.31	21.36	21.28
Average	21.27	21.16	20.72	21.28	21.33	21.23
Standard deviation	0.08	0.06	0.32	0.03	0.04	0.06
DO (mg/L)	6.05	5.88	6.05	6.97	7.05	7.00
	6.01	5.96	5.94	6.97	7.02	7.00
	5.97	5.82	5.99	6.98	7.00	6.98
Average	6.01	5.89	5.99	6.97	7.02	6.99
Standard deviation	0.04	0.07	0.06	0.01	0.03	0.01
Turbidity (NTU)	17.4	16.8	16.6	15.4	15.3	14.4
	17.5	16.6	17.2	15.3	14.6	15.2
	15.4	17.3	15.7	14.7	14.6	14.9
Average	16.8	16.9	16.5	15.1	14.8	14.8
Standard deviation	1.18	0.36	0.75	0.38	0.40	0.40
TSS (mg/L)	43.6	46.4	48.8	54.8	56.4	51.2
	48.4	45.6	46.8	58.0	57.6	57.2
	48.8	46.0	47.6	57.6	55.6	58.4
Average	46.9	46.0	47.7	56.8	56.5	55.6
Standard deviation	2.89	0.40	1.01	1.74	1.01	3.86
DOC (mg/L)	5.13	4.97	5.01	8.52	8.6	8.42
TOC (mg/L)	12.5	11.4	12.6	11.8	14.3	16.0

G4B(www.g4b.go.kr)진위확인코드 : mul2jn1x3RU=

IV. TO BE CONTINUED

- **de-Ballasting (9th cycle : 2013. 08. 13)** - Viable organisms

Test Item	Control water			Treated water		
	B	M	E	B	M	E
≥ 50 μm (inds/m³)	250	250	250	1*	2	1
	250	0	250			
	0	0	250			
Average	167	83	250			
Standard deviation	144	144	0			
≥ 10 - 50 μm (inds/mL)	222	209	186	0	0	0
	157	186	179	0	0	0
	158	163	207	0	0	0
Average	179	186	191	0	0	0
Standard deviation	37	23	15	0	0	0

* Analysed entire sample volume

- **de-Ballasting (9th cycle : 2013. 08. 13)** - Bacteria

Test Item	Control water			Treated water		
	B	M	E	B	M	E
Heterotrophic bacteria (CFU/mL)	20 000	20 000	18 800	1 010	800	1 140
	10 800	12 400	22 400	1 430	660	1 050
	10 400	15 600	17 200	1 240	890	1 160
Average	13 734	16 000	19 467	1 227	784	1 117
Standard deviation	5 431	3 816	2 663	210	116	59
Coliform (CFU/100 mL)	0	0	0	0	0	0
	0	0	0	0	0	0
	0	0	0	0	0	0
Average	0	0	0	0	0	0
Standard deviation	0	0	0	0	0	0
Escherichia coli (CFU/100 mL)	0	0	0	0	0	0
	0	0	0	0	0	0
	0	0	0	0	0	0
Average	0	0	0	0	0	0
Standard deviation	0	0	0	0	0	0
Intestinal Enterococci (CFU/100 mL)	TNTC*	TNTC	TNTC	107	48	27
	TNTC	TNTC	TNTC	78	50	30
	TNTC	TNTC	TNTC	84	44	23
Average	TNTC	TNTC	TNTC	90	48	27
Standard deviation	0	0	0	15	3	4
Toxicogenic *Vibrio cholerae* (O1, O139) (CFU/100 mL)	0	0	0	0	0	0
	0	0	0	0	0	0
	0	0	0	0	0	0
Average	0	0	0	0	0	0
Standard deviation	0	0	0	0	0	0

* Too Numerous To Count

G4B(www.g4b.go.kr)진위확인코드 : mul2jn1x3RU=

IV. TO BE CONTINUED

- **Ballasting (10th cycle : 2013. 08. 15)** - Basic water parameter

Test Item	Test water			Control water			Treated water		
	B	M	E	B	M	E	B	M	E
Water temperature (℃)	28.36	28.35	28.22	28.25	27.96	28.22	28.00	28.09	28.33
	28.28	28.14	28.36	28.21	28.04	28.17	27.94	27.95	28.60
	28.48	28.17	28.29	28.17	27.97	28.08	27.94	28.08	28.34
Average	28.37	28.22	28.29	28.21	27.99	28.16	27.96	28.04	28.42
Standard deviation	0.10	0.11	0.07	0.04	0.04	0.07	0.03	0.08	0.15
pH	7.87	7.96	7.97	7.94	7.99	8.00	7.74	7.60	7.60
	7.91	7.98	7.98	7.95	8.00	8.00	7.71	7.54	7.67
	7.92	7.99	7.99	7.95	8.00	8.00	7.69	7.56	7.55
Average	7.90	7.98	7.98	7.95	8.00	8.00	7.71	7.57	7.61
Standard deviation	0.03	0.02	0.01	0.01	0.01	0.00	0.03	0.03	0.06
ORP (mV)	344	337	348	360	328	335	747	756	747
	349	330	340	363	327	333	775	787	782
	356	329	336	365	327	332	787	797	797
Average	350	332	341	363	327	333	770	780	775
Standard deviation	6	4	6	3	1	2	21	21	26
Salinity (PSU)	21.64	20.86	21.52	21.92	21.81	21.91	21.67	21.71	21.67
	21.68	21.66	21.44	21.89	21.84	21.88	21.69	21.70	21.65
	21.55	21.65	21.45	21.86	21.74	21.42	21.69	21.71	21.67
Average	21.62	21.39	21.47	21.89	21.80	21.74	21.68	21.71	21.66
Standard deviation	0.07	0.46	0.04	0.03	0.05	0.27	0.01	0.01	0.01
DO (mg/L)	6.94	6.99	6.97	7.03	7.02	6.97	7.04	7.07	6.97
	6.98	7.00	6.97	7.02	7.02	6.98	7.04	7.10	6.97
	6.98	6.99	6.98	7.00	7.01	7.00	7.03	7.08	6.98
Average	6.97	6.99	6.97	7.02	7.02	6.98	7.04	7.08	6.97
Standard deviation	0.02	0.01	0.01	0.02	0.01	0.02	0.01	0.02	0.01
Turbidity (NTU)	15.7	21.5	18.6	14.6	15.2	16.9	15.0	13.9	15.6
	15.8	17.2	19.4	13.6	15.5	17.9	16.3	14.0	16.5
	14.0	17.7	19.9	13.1	14.3	15.0	15.7	14.8	15.5
Average	15.2	18.8	19.3	13.8	15.0	16.6	15.7	14.2	15.9
Standard deviation	1.01	2.35	0.66	0.76	0.62	1.47	0.65	0.49	0.55
TSS (mg/L)	63.6	64.0	62.8	60.0	57.2	61.2	67.2	67.2	62.8
	62.0	65.6	65.2	59.2	58.8	63.2	69.2	69.6	68.4
	62.0	64.0	64.8	58.8	57.6	64.4	66.8	71.6	69.6
Average	62.5	64.5	64.3	59.3	57.9	62.9	67.7	69.5	66.9
Standard deviation	0.92	0.92	1.29	0.61	0.83	1.62	1.29	2.20	3.63
DOC (mg/L)	8.60	8.11	7.88	7.88	8.00	8.04	7.95	8.02	7.86
TOC (mg/L)	13.8	14.0	13.8	13.3	13.6	13.5	13.8	16.3	14.5

G4B(www.g4b.go.kr)진위확인코드 : mul2jn1x3RU=

IV. TO BE CONTINUED

- **Ballasting (10th cycle : 2013. 08. 15)** – Viable organisms

Test Item	Test water			Control water			Treated water		
	B	M	E	B	M	E	B	M	E
≥ 50 μm (inds/m³)	260 000	234 000	223 000	229 000	213 000	222 000	35 600	22 600	31 400
	241 000	218 000	219 000	203 000	216 000	216 000	38 000	33 000	33 000
	229 000	239 000	229 000	195 000	215 000	210 000	31 200	29 800	35 000
Average	243 334	230 334	223 667	209 000	214 667	216 000	34 934	28 467	33 134
Standard deviation	12 763	8 957	4 110	14 514	1 247	4 899	2 816	4 349	1 473
≥ 10 – 50 μm (inds/mL)	1 032	1 074	1 119	1 207	1 038	1 070	0	2	0
	1 283	1 230	1 014	1 248	1 014	1 054	0	0	0
	1 086	1 105	1 123	1 032	1 025	1 103	0	0	0
Average	1 134	1 137	1 086	1 163	1 026	1 076	0	1	0
Standard deviation	132	83	62	115	12	25	0	1	0

- **Ballasting (10th cycle : 2013. 08. 15)** – Bacteria

Test Item	Test water			Control water			Treated water		
	B	M	E	B	M	E	B	M	E
Heterotrophic bacteria (CFU/mL)	12 800	9 800	12 100	7 900	9 200	7 200	0	0	0
	11 300	10 300	12 900	9 100	9 800	7 400	0	0	0
	10 500	10 600	11 100	10 600	8 200	7 400	0	0	0
Average	11 534	10 234	12 034	9 200	9 067	7 334	0	0	0
Standard deviation	1 168	404	902	1 353	808	115	0	0	0
Coliform (CFU/100 mL)	TNTC*	TNTC	TNTC	TNTC	TNTC	TNTC	0	0	0
	TNTC	TNTC	TNTC	TNTC	TNTC	TNTC	0	0	0
	TNTC	TNTC	TNTC	TNTC	TNTC	TNTC	0	0	0
Average	TNTC	TNTC	TNTC	TNTC	TNTC	TNTC	0	0	0
Standard deviation	0	0	0	0	0	0	0	0	0
Escherichia coli (CFU/100 mL)	44	40	36	60	58	36	0	0	0
	36	38	38	34	46	24	0	0	0
	50	36	40	54	40	42	0	0	0
Average	44	38	38	50	48	34	0	0	0
Standard deviation	7	2	2	14	9	9	0	0	0
Intestinal Enterococci (CFU/100 mL)	TNTC	TNTC	TNTC	TNTC	TNTC	TNTC	0	3	2
	TNTC	TNTC	TNTC	TNTC	TNTC	TNTC	0	2	0
	TNTC	TNTC	TNTC	TNTC	TNTC	TNTC	0	0	0
Average	TNTC	TNTC	TNTC	TNTC	TNTC	TNTC	0	2	1
Standard deviation	0	0	0	0	0	0	0	2	1
Toxicogenic *Vibrio cholerae* (O1 O139) (CFU/100 mL)	0	0	0	0	0	0	0	0	0
	0	0	0	0	0	0	0	0	0
	0	0	0	0	0	0	0	0	0
Average	0	0	0	0	0	0	0	0	0
Standard deviation	0	0	0	0	0	0	0	0	0

* Too Numerous To Count

G4B(www.g4b.go.kr)진위확인코드 : mul2jn1x3RU=

IV. TO BE CONTINUED

- **de-Ballasting (10th cycle : 2013. 08. 20)** – Basic water parameter

Test Item	Control water			Treated water		
	B	M	E	B	M	E
Water temperature (℃)	28.80	29.13	28.83	29.04	29.01	28.97
	28.76	29.13	28.77	28.98	28.92	28.95
	28.75	29.01	28.78	28.92	28.88	28.95
Average	28.77	29.09	28.79	28.98	28.94	28.96
Standard deviation	0.03	0.07	0.03	0.06	0.07	0.01
pH	6.88	6.93	6.96	7.16	7.14	7.18
	6.92	6.96	6.97	7.16	7.15	7.20
	6.93	6.96	6.97	7.18	7.17	7.20
Average	6.91	6.95	6.97	7.17	7.15	7.19
Standard deviation	0.03	0.02	0.01	0.01	0.02	0.01
ORP (mV)	288	281	248	314	331	340
	237	257	230	280	308	317
	218	241	225	268	295	306
Average	248	260	234	287	311	321
Standard deviation	36	20	12	24	18	17
Salinity (PSU)	21.55	21.38	20.96	21.59	21.60	21.58
	21.61	21.43	21.61	21.66	21.70	21.66
	21.63	21.51	21.60	21.68	21.70	21.67
Average	21.60	21.44	21.39	21.64	21.67	21.64
Standard deviation	0.04	0.07	0.37	0.05	0.06	0.05
DO (mg/L)	6.02	5.86	6.04	6.91	6.90	6.87
	6.01	5.84	6.03	6.92	6.90	6.87
	5.96	5.88	6.03	6.95	6.90	6.87
Average	6.00	5.86	6.03	6.93	6.90	6.87
Standard deviation	0.03	0.02	0.01	0.02	0.00	0.00
Turbidity (NTU)	19.8	20.0	19.8	15.0	15.9	15.3
	19.9	21.8	20.2	14.4	17.5	16.1
	20.0	20.1	19.3	13.1	16.4	15.1
Average	19.9	20.6	19.8	14.2	16.6	15.5
Standard deviation	0.10	1.01	0.45	0.97	0.82	0.53
TSS (mg/L)	48.8	48.8	50.4	62.8	60.4	60.8
	47.6	50.4	51.6	61.2	56.4	59.6
	48.4	49.2	50.4	58.4	60.8	64.0
Average	48.3	49.5	50.8	60.8	59.2	61.5
Standard deviation	0.61	0.83	0.69	2.23	2.43	2.27
DOC (mg/L)	5.79	5.74	5.85	9.57	9.67	9.69
TOC (mg/L)	11.6	12.0	11.7	13.5	14.7	10.7

G4B(www.g4b.go.kr)진위확인코드 : mul2jn1x3RU=

IV. TO BE CONTINUED

- **de-Ballasting (10th cycle : 2013. 08. 20)** - Viable organisms

Test Item	Control water			Treated water		
	B	M	E	B	M	E
≥ 50 μm (inds/m³)	500	500	500	0*	0	1
	500	0	500			
	0	500	500			
Average	334	334	500			
Standard deviation	289	289	0			
≥ 10 - 50 μm (inds/mL)	196	158	228	0	0	0
	266	227	216	0	0	0
	198	244	132	0	0	0
Average	220	210	192	0	0	0
Standard deviation	40	46	52	0	0	0

* Analysed entire sample volume

- **de-Ballasting (10th cycle : 2013. 08. 20)** - Bacteria

Test Item	Control water			Treated water		
	B	M	E	B	M	E
Heterotrophic bacteria (CFU/mL)	27 600	25 700	45 300	1 430	1 430	370
	30 900	31 100	43 700	1 080	2 060	330
	31 800	27 900	31 400	1 240	1 520	500
Average	30 100	28 234	40 134	1 250	1 670	400
Standard deviation	2 211	2 715	7 605	175	341	89
Coliform (CFU/100 mL)	0	2	2	0	0	0
	0	0	0	0	0	0
	0	0	0	0	0	0
Average	0	1	1	0	0	0
Standard deviation	0	1	1	0	0	0
Escherichia coli (CFU/100 mL)	20	18	22	0	0	0
	28	14	18	0	0	0
	22	14	14	0	0	0
Average	24	16	18	0	0	0
Standard deviation	4	2	4	0	0	0
Intestinal Enterococci (CFU/100 mL)	TNTC*	TNTC	TNTC	TNTC	TNTC	TNTC
	TNTC	TNTC	TNTC	TNTC	TNTC	TNTC
	TNTC	TNTC	TNTC	TNTC	TNTC	TNTC
Average	TNTC	TNTC	TNTC	TNTC	TNTC	TNTC
Standard deviation	0	0	0	0	0	0
Toxicogenic *Vibrio cholerae* (O1, O139) (CFU/100 mL)	0	0	0	0	0	0
	0	0	0	0	0	0
	0	0	0	0	0	0
Average	0	0	0	0	0	0
Standard deviation	0	0	0	0	0	0

* Too Numerous To Count

G4B(www.g4b.go.kr)진위확인코드 : mul2jn1x3RU=

IV. TO BE CONTINUED

- **Ballasting (11th cycle : 2013. 08. 22)** - Basic water parameter

Test Item	Test water			Control water			Treated water		
	B	M	E	B	M	E	B	M	E
Water temperature (℃)	24.92	25.22	25.17	24.72	24.74	24.65	24.60	24.59	24.63
	24.75	24.68	25.34	24.86	24.65	24.62	24.55	24.48	24.53
	24.71	25.31	24.95	24.56	24.44	24.64	24.48	24.62	24.68
Average	24.79	25.07	25.15	24.71	24.61	24.64	24.54	24.56	24.61
Standard deviation	0.11	0.34	0.20	0.15	0.15	0.02	0.06	0.07	0.08
pH	7.97	7.98	7.99	7.99	7.99	8.00	7.73	7.68	7.70
	7.97	7.98	7.99	8.00	7.99	8.00	7.74	7.67	7.71
	7.98	7.98	7.99	7.99	7.99	8.00	7.74	7.68	7.70
Average	7.97	7.98	7.99	7.99	7.99	8.00	7.74	7.68	7.70
Standard deviation	0.01	0.00	0.00	0.01	0.00	0.00	0.01	0.01	0.01
ORP (mV)	311	276	267	288	282	274	773	777	792
	303	279	269	286	282	274	794	803	806
	299	280	271	284	283	275	806	813	814
Average	304	278	269	286	282	274	791	798	804
Standard deviation	6	2	2	2	1	1	17	19	11
Salinity (PSU)	34.36	34.41	34.58	34.20	34.54	34.46	34.57	34.56	34.64
	34.51	34.75	34.70	34.30	34.63	34.54	34.59	34.64	34.66
	34.52	34.64	34.70	34.61	34.72	34.58	34.62	34.58	34.60
Average	34.46	34.60	34.66	34.37	34.63	34.53	34.59	34.59	34.63
Standard deviation	0.09	0.17	0.07	0.21	0.09	0.06	0.03	0.04	0.03
DO (mg/L)	6.77	6.70	6.72	6.79	6.78	6.80	6.78	6.79	6.79
	6.77	6.78	6.71	6.78	6.79	6.81	6.79	6.81	6.79
	6.79	6.71	6.75	6.81	6.81	6.80	6.80	6.79	6.78
Average	6.78	6.73	6.73	6.79	6.79	6.80	6.79	6.80	6.79
Standard deviation	0.01	0.04	0.02	0.02	0.02	0.01	0.01	0.01	0.01
Turbidity (NTU)	5.32	5.62	6.29	5.52	5.79	5.20	4.62	4.77	3.84
	5.01	4.98	5.26	4.92	5.68	5.52	4.56	4.27	4.11
	4.82	5.77	4.67	5.85	4.92	5.16	4.01	4.66	4.14
Average	5.05	5.46	5.41	5.43	5.46	5.29	4.40	4.57	4.03
Standard deviation	0.25	0.42	0.82	0.47	0.47	0.20	0.34	0.26	0.17
TSS (mg/L)	21.6	19.6	22.4	21.2	18.8	20.4	23.2	18.4	19.2
	19.6	21.2	20.0	23.6	18.0	20.8	21.6	22.8	16.8
	14.0	22.8	24.8	20.0	18.4	20.4	22.0	20.8	23.6
Average	18.4	21.2	22.4	21.6	18.4	20.5	22.3	20.7	19.9
Standard deviation	3.94	1.60	2.40	1.83	0.40	0.23	0.83	2.20	3.45
DOC (mg/L)	3.91	3.88	3.81	3.88	3.77	3.73	4.09	3.70	3.75
TOC (mg/L)	1.68	2.50	2.04	2.32	2.45	2.30	2.47	2.26	2.58

IV. TO BE CONTINUED

G4B(www.g4b.go.kr)진위확인코드 : mul2jn1x3RU=

IV. TO BE CONTINUED

- **Ballasting (11th cycle : 2013. 08. 22)** – Viable organisms

Test Item	Test water			Control water			Treated water		
	B	M	E	B	M	E	B	M	E
≥ 50 μm (inds/m³)	206 000	213 000	181 000	184 000	214 000	181 000	2 160	3 540	2 880
	221 000	191 000	147 000	199 000	188 000	173 000	2 130	2 910	2 370
	172 000	159 000	141 000	188 000	176 000	150 000	2 610	2 880	2 910
Average	199 667	187 667	156 334	190 334	192 667	168 000	2 300	3 110	2 720
Standard deviation	20 499	22 171	17 613	6 342	15 861	13 140	220	304	248
≥ 10 – 50 μm (inds/mL)	1 079	904	1 141	1 086	1 024	1 103	0	0	0
	1 002	1 140	1 070	976	1 057	1 012	0	0	0
	852	1 272	990	1 011	1 027	1 127	0	0	0
Average	978	1 106	1 067	1 025	1 036	1 081	0	0	0
Standard deviation	115	186	76	56	18	61	0	0	0

- **Ballasting (11th cycle : 2013. 08. 22)** – Bacteria

Test Item	Test water			Control water			Treated water		
	B	M	E	B	M	E	B	M	E
Heterotrophic bacteria (CFU/mL)	18 600	16 900	15 300	14 300	16 700	20 500	0	0	10
	17 900	17 200	15 700	16 500	13 400	17 700	0	0	10
	18 400	12 900	14 300	19 000	14 000	18 900	0	0	10
Average	18 300	15 667	15 100	16 600	14 700	19 034	0	0	10
Standard deviation	361	2 401	721	2 352	1 758	1 405	0	0	0
Coliform (CFU/100 mL)	TNTC*	TNTC	TNTC	TNTC	TNTC	TNTC	0	1	1
	TNTC	TNTC	TNTC	TNTC	TNTC	TNTC	0	0	0
	TNTC	TNTC	TNTC	TNTC	TNTC	TNTC	0	0	0
Average	TNTC	TNTC	TNTC	TNTC	TNTC	TNTC	0	1	1
Standard deviation	0	0	0	0	0	0	0	1	1
Escherichia coli (CFU/100 mL)	338	448	508	32	300	492	0	0	0
	312	452	486	18	328	458	0	0	0
	346	506	518	24	226	484	0	0	0
Average	325	450	497	25	314	475	0	0	0
Standard deviation	18	32	16	7	53	18	0	0	0
Intestinal Enterococci (CFU/100 mL)	TNTC	TNTC	TNTC	TNTC	TNTC	TNTC	13	4	4
	TNTC	TNTC	TNTC	TNTC	TNTC	TNTC	4	2	2
	TNTC	TNTC	TNTC	TNTC	TNTC	TNTC	5	0	1
Average	TNTC	TNTC	TNTC	TNTC	TNTC	TNTC	8	2	3
Standard deviation	0	0	0	0	0	0	5	2	2
Toxicogenic *Vibrio cholerae* (O1 O139) (CFU/100 mL)	0	0	0	0	0	0	0	0	0
	0	0	0	0	0	0	0	0	0
	0	0	0	0	0	0	0	0	0
Average	0	0	0	0	0	0	0	0	0
Standard deviation	0	0	0	0	0	0	0	0	0

* Too Numerous To Count

G4B(www.g4b.go.kr)진위확인코드 : mul2jn1x3RU=

IV. TO BE CONTINUED

- **de-Ballasting (11th cycle : 2013. 08. 27)** - Basic water parameter

Test Item	Control water			Treated water		
	B	M	E	B	M	E
Water temperature (℃)	25.97	25.61	26.00	25.69	25.83	25.95
	26.07	25.84	26.00	25.61	25.96	25.74
	25.68	25.47	25.82	25.62	25.67	25.79
Average	25.91	25.64	25.94	25.64	25.82	25.83
Standard deviation	0.20	0.19	0.10	0.04	0.15	0.11
pH	7.34	7.32	7.34	7.36	7.39	7.40
	7.35	7.35	7.35	7.37	7.40	7.42
	7.34	7.34	7.35	7.37	7.40	7.43
Average	7.34	7.34	7.35	7.37	7.40	7.42
Standard deviation	0.01	0.02	0.01	0.01	0.01	0.02
ORP (mV)	364	335	329	584	503	454
	344	321	320	557	483	435
	330	314	312	541	470	423
Average	346	323	320	561	485	437
Standard deviation	17	11	9	22	17	16
Salinity (PSU)	33.21	34.08	33.92	34.31	34.03	33.91
	33.00	33.72	33.96	34.47	33.94	34.20
	33.86	34.33	34.18	34.45	34.31	34.10
Average	33.36	34.04	34.02	34.41	34.09	34.07
Standard deviation	0.45	0.31	0.14	0.09	0.19	0.15
DO (mg/L)	5.77	5.81	5.83	6.75	6.74	6.70
	5.64	5.74	5.73	6.75	6.73	6.70
	5.74	5.82	5.73	6.75	6.73	6.70
Average	5.72	5.79	5.76	6.75	6.73	6.70
Standard deviation	0.07	0.04	0.06	0.00	0.01	0.00
Turbidity (NTU)	6.28	5.04	4.72	5.37	6.15	5.59
	6.08	5.18	4.81	5.86	5.98	4.45
	5.13	4.46	4.44	5.34	6.23	5.32
Average	5.83	4.89	4.66	5.52	6.12	5.12
Standard deviation	0.61	0.38	0.19	0.29	0.13	0.60
TSS (mg/L)	16.4	15.2	13.6	19.2	17.6	21.6
	18.0	16.4	14.4	19.6	20.4	19.6
	16.4	17.6	18.8	20.8	18.0	20.4
Average	16.9	16.4	15.6	19.9	18.7	20.5
Standard deviation	0.92	1.20	2.80	0.83	1.51	1.01
DOC (mg/L)	1.79	1.87	1.96	4.30	4.31	4.27
TOC (mg/L)	0.54	0.60	0.67	2.72	2.42	2.56

G4B(www.g4b.go.kr)진위확인코드 : mul2jn1x3RU=

IV. TO BE CONTINUED

- **de-Ballasting (11th cycle : 2013. 08. 27)** - Viable organisms

Test Item	Control water			Treated water		
	B	M	E	B	M	E
≥ 50 μm (inds/m³)	2 000	2 000	1 500	0*	0	0
	2 000	3 000	3 000			
	1 000	2 000	3 000			
Average	1 667	2 334	2 500			
Standard deviation	577	577	866			
≥ 10 - 50 μm (inds/mL)	101	140	142	0	0	0
	128	115	114	0	1	0
	136	140	140	0	0	0
Average	122	132	132	0	1	0
Standard deviation	18	14	16	0	1	0

* Analysed entire sample volume

- **de-Ballasting (11th cycle : 2013. 08. 27)** - Bacteria

Test Item	Control water			Treated water		
	B	M	E	B	M	E
Heterotrophic bacteria (CFU/mL)	26 600	26 200	31 400	1 660	1 790	2 130
	32 300	38 800	24 400	1 780	1 750	2 600
	25 100	31 800	19 200	1 700	2 050	2 530
Average	28 000	32 267	25 000	1 714	1 864	2 420
Standard deviation	3 799	6 313	6 122	61	163	254
Coliform (CFU/100 mL)	0	0	0	3	1	5
	0	0	0	1	0	4
	0	0	0	0	0	1
Average	0	0	0	2	1	5
Standard deviation	0	0	0	2	1	2
Escherichia coli (CFU/100 mL)	2	8	6	0	0	0
	0	2	4	0	0	0
	0	2	2	0	0	0
Average	1	4	4	0	0	0
Standard deviation	1	3	2	0	0	0
Intestinal Enterococci (CFU/100 mL)	286	386	382	19	9	3
	258	418	372	30	11	2
	200	400	402	26	12	1
Average	248	402	386	25	11	2
Standard deviation	44	16	15	6	2	1
Toxicogenic *Vibrio cholerae* (O1, O139) (CFU/100 mL)	0	0	0	0	0	0
	0	0	0	0	0	0
	0	0	0	0	0	0
Average	0	0	0	0	0	0
Standard deviation	0	0	0	0	0	0

G4B(www.g4b.go.kr)진위확인코드 : muf2jn1x3RU=

IV. TO BE CONTINUED

- **Ballasting (12th cycle : 2013. 08. 29)** - Basic water parameter

Test Item	Test water			Control water			Treated water		
	B	M	E	B	M	E	B	M	E
Water temperature (℃)	27.83	27.16	27.50	27.10	26.80	27.02	27.23	26.97	27.17
	27.80	27.23	27.30	27.21	26.95	26.93	27.31	27.02	27.26
	27.45	27.05	27.34	27.16	26.90	26.93	27.32	27.06	27.30
Average	27.69	27.15	27.38	27.16	26.88	26.96	27.29	27.02	27.24
Standard deviation	0.21	0.09	0.11	0.06	0.08	0.05	0.05	0.05	0.07
pH	8.17	8.18	8.19	8.20	8.20	8.20	8.10	8.00	7.75
	8.18	8.19	8.20	8.20	8.20	8.21	8.13	7.79	7.77
	8.18	8.19	8.20	8.20	8.21	8.22	8.15	7.79	7.77
Average	8.18	8.19	8.20	8.20	8.20	8.21	8.13	7.86	7.76
Standard deviation	0.01	0.01	0.01	0.00	0.01	0.01	0.03	0.12	0.01
ORP (mV)	690	639	650	656	608	602	754	794	809
	678	633	637	647	586	583	785	810	819
	668	623	627	640	578	566	793	815	822
Average	679	632	638	648	591	584	777	806	817
Standard deviation	11	8	12	8	16	18	21	11	7
Salinity (PSU)	21.23	21.26	21.23	21.30	21.32	21.28	21.35	21.24	21.30
	21.31	21.29	21.32	21.19	21.29	21.30	21.38	21.25	21.31
	21.28	21.31	21.32	21.27	21.33	21.30	21.38	21.24	21.31
Average	21.27	21.29	21.29	21.25	21.31	21.29	21.37	21.24	21.31
Standard deviation	0.04	0.03	0.05	0.06	0.02	0.01	0.02	0.01	0.01
DO (mg/L)	7.03	7.08	7.04	7.13	7.11	7.05	7.12	7.10	7.04
	7.05	7.07	7.05	7.11	7.10	7.08	7.13	7.09	7.04
	7.05	7.07	7.07	7.14	7.09	7.07	7.12	7.09	7.05
Average	7.04	7.07	7.05	7.13	7.10	7.07	7.12	7.09	7.04
Standard deviation	0.01	0.01	0.02	0.02	0.01	0.02	0.01	0.01	0.01
Turbidity (NTU)	16.2	18.2	18.2	15.8	18.5	15.0	14.7	14.2	14.3
	14.8	15.5	18.4	19.4	18.5	14.6	16.8	15.9	14.1
	18.1	17.4	18.3	15.9	16.8	15.5	12.6	15.1	14.8
Average	16.4	17.0	18.3	17.0	17.9	15.0	14.7	15.1	14.4
Standard deviation	1.66	1.39	0.10	2.05	0.98	0.45	2.10	0.85	0.36
TSS (mg/L)	60.4	60.4	66.0	64.0	62.8	63.6	56.0	56.0	56.8
	60.0	59.2	60.0	63.2	64.0	61.6	56.8	59.6	58.8
	58.8	59.6	61.2	63.6	59.2	61.6	58.8	60.0	58.4
Average	59.7	59.7	62.4	63.6	62.0	62.3	57.2	58.5	58.0
Standard deviation	0.83	0.61	3.17	0.40	2.50	1.15	1.44	2.20	1.06
DOC (mg/L)	7.98	8.02	7.96	8.06	8.15	7.86	8.33	8.20	8.16
TOC (mg/L)	8.84	11.5	11.8	9.91	9.84	9.23	9.92	9.49	10.6

G4B(www.g4b.go.kr)진위확인코드 : mul2in1x3RU=

IV. TO BE CONTINUED

- **Ballasting (12th cycle : 2013. 08. 29)** - Viable organisms

Test Item	Test water			Control water			Treated water		
	B	M	E	B	M	E	B	M	E
≥ 50 μm (inds/m³)	165 000	210 000	185 000	131 000	158 000	203 000	21 600	20 200	17 000
	186 000	178 000	181 000	147 000	167 000	173 000	17 200	21 300	21 000
	216 000	203 000	178 000	135 000	143 000	175 000	18 900	21 700	18 100
Average	189 000	197 000	181 334	137 667	156 000	183 667	19 234	21 067	18 700
Standard deviation	20 928	13 736	2 867	6 799	9 899	13 695	1 812	634	1 687
≥ 10 - 50 μm (inds/mL)	1 196	1 053	1 058	876	902	1 036	0	1	0
	1 205	1 073	935	853	732	1 107	1	0	0
	1 039	1 113	1 102	716	645	1 125	0	0	1
Average	1 147	1 080	1 032	815	760	1 090	1	1	1
Standard deviation	93	31	87	87	131	47	1	1	1

- **Ballasting (12th cycle : 2013. 08. 29)** - Bacteria

Test Item	Test water			Control water			Treated water		
	B	M	E	B	M	E	B	M	E
Heterotrophic bacteria (CFU/mL)	17 200	17 000	17 500	14 900	15 400	14 100	0	0	0
	14 600	16 700	16 200	15 000	14 800	14 200	0	0	0
	17 400	14 400	13 600	16 200	14 000	12 900	0	0	0
Average	16 400	16 034	15 767	15 367	14 734	13 734	0	0	0
Standard deviation	1 838	212	919	71	424	71	0	0	0
Coliform (CFU/100 mL)	TNTC*	TNTC	TNTC	TNTC	TNTC	TNTC	0	0	0
	TNTC	TNTC	TNTC	TNTC	TNTC	TNTC	0	0	0
	TNTC	TNTC	TNTC	TNTC	TNTC	TNTC	0	0	0
Average	TNTC	TNTC	TNTC	TNTC	TNTC	TNTC	0	0	0
Standard deviation	0	0	0	0	0	0	0	0	0
Escherichia coli (CFU/100 mL)	TNTC	TNTC	TNTC	TNTC	TNTC	TNTC	0	0	0
	TNTC	TNTC	TNTC	TNTC	TNTC	TNTC	0	0	0
	TNTC	TNTC	TNTC	TNTC	TNTC	TNTC	0	0	0
Average	TNTC	TNTC	TNTC	TNTC	TNTC	TNTC	0	0	0
Standard deviation	0	0	0	0	0	0	0	0	0
Intestinal Enterococci (CFU/100 mL)	TNTC	TNTC	TNTC	TNTC	TNTC	TNTC	1	1	0
	TNTC	TNTC	TNTC	TNTC	TNTC	TNTC	0	0	0
	TNTC	TNTC	TNTC	TNTC	TNTC	TNTC	0	3	0
Average	TNTC	TNTC	TNTC	TNTC	TNTC	TNTC	1	2	0
Standard deviation	0	0	0	0	0	0	1	2	0
Toxicogenic *Vibrio cholerae* (O1, O139) (CFU/100 mL)	0	0	0	0	0	0	0	0	0
	0	0	0	0	0	0	0	0	0
	0	0	0	0	0	0	0	0	0
Average	0	0	0	0	0	0	0	0	0
Standard deviation	0	0	0	0	0	0	0	0	0

* Too Numerous To Count

G4B(www.g4b.go.kr)진위확인코드 : muf2jn1x3RU=

IV. TO BE CONTINUED

- **de-Ballasting (12th cycle : 2013. 09. 03)** - Basic water parameter

Test Item	Control water			Treated water		
	B	M	E	B	M	E
Water temperature (℃)	25.35	25.36	25.45	25.00	25.50	25.55
	25.43	25.44	25.39	25.32	25.55	25.62
	25.46	25.35	25.32	25.44	25.56	25.61
Average	25.41	25.38	25.39	25.25	25.54	25.59
Standard deviation	0.06	0.05	0.07	0.23	0.03	0.04
pH	6.94	6.93	6.96	7.48	7.36	7.33
	6.96	6.94	7.02	7.41	7.34	7.36
	6.94	6.97	7.00	7.42	7.34	7.37
Average	6.95	6.95	6.99	7.44	7.35	7.35
Standard deviation	0.01	0.02	0.03	0.04	0.01	0.02
ORP (mV)	234	234	227	305	287	300
	213	212	197	289	259	268
	204	204	188	278	250	261
Average	217	217	204	291	265	276
Standard deviation	15	16	20	14	19	21
Salinity (PSU)	21.13	21.18	21.01	20.14	21.03	20.87
	21.16	21.23	21.05	20.96	21.21	21.16
	21.18	21.23	21.11	21.11	21.22	21.18
Average	21.16	21.21	21.06	20.74	21.15	21.07
Standard deviation	0.03	0.03	0.05	0.52	0.11	0.17
DO (mg/L)	6.25	6.27	6.47	7.34	7.28	7.22
	6.24	6.19	6.41	7.26	7.29	7.22
	6.21	6.26	6.40	7.23	7.27	7.22
Average	6.23	6.24	6.43	7.28	7.28	7.22
Standard deviation	0.02	0.04	0.04	0.06	0.01	0.00
Turbidity (NTU)	19.7	21.1	21.2	17.4	18.6	16.7
	20.9	21.6	20.0	16.2	16.1	18.3
	20.8	18.9	21.0	15.2	17.1	16.4
Average	20.5	20.5	20.7	16.3	17.3	17.1
Standard deviation	0.67	1.44	0.64	1.10	1.26	1.02
TSS (mg/L)	44.0	50.8	45.2	60.0	58.0	56.0
	48.8	50.8	50.0	57.6	58.4	55.2
	48.4	52.0	50.0	57.6	57.6	55.2
Average	47.1	51.2	48.4	58.4	58.0	55.5
Standard deviation	2.66	0.69	2.77	1.39	0.40	0.46
DOC (mg/L)	5.43	5.68	5.64	7.68	8.83	8.51
TOC (mg/L)	11.1	7.98	7.97	7.85	8.10	9.18

G4B(www.g4b.go.kr)진위확인코드 : muf2jn1x3RU=

IV. TO BE CONTINUED

- **de-Ballasting (12th cycle : 2013. 09. 03)** - Viable organisms

Test Item	Control water			Treated water		
	B	M	E	B	M	E
≥ 50 μm (inds/m³)	500	0	500	2*	3	1
	0	500	500			
	500	500	500			
Average	333	333	500			
Standard deviation	289	289	0			
≥ 10 - 50 μm (inds/mL)	144	171	96	0	0	0
	88	112	104	0	0	0
	147	102	96	0	0	0
Average	127	129	99	0	0	0
Standard deviation	33	37	5	0	0	0

* Analysed entire sample volume

- **de-Ballasting (12th cycle : 2013. 09. 03)** - Bacteria

Test Item	Control water			Treated water		
	B	M	E	B	M	E
Heterotrophic bacteria (CFU/mL)	16 200	15 700	11 600	1 010	250	510
	16 600	16 800	13 400	810	410	530
	13 800	25 000	14 000	1 080	400	500
Average	15 534	19 167	13 000	967	354	514
Standard deviation	1 514	5 082	1 249	140	90	15
Coliform (CFU/100 mL)	TNTC*	TNTC	TNTC	24	26	46
	TNTC	TNTC	TNTC	17	36	36
	TNTC	TNTC	TNTC	12	32	37
Average	TNTC	TNTC	TNTC	18	32	40
Standard deviation	0	0	0	6	5	6
Escherichia coli (CFU/100 mL)	TNTC	TNTC	TNTC	5	0	1
	TNTC	TNTC	TNTC	2	1	0
	TNTC	TNTC	TNTC	2	0	0
Average	TNTC	TNTC	TNTC	3	1	1
Standard deviation	0	0	0	2	1	1
Intestinal Enterococci (CFU/100 mL)	TNTC	TNTC	TNTC	99	77	35
	TNTC	TNTC	TNTC	126	63	50
	TNTC	TNTC	TNTC	102	79	37
Average	TNTC	TNTC	TNTC	109	73	41
Standard deviation	0	0	0	15	9	8
Toxicogenic *Vibrio cholerae* (O1, O139) (CFU/100 mL)	0	0	0	0	0	0
	0	0	0	0	0	0
	0	0	0	0	0	0
Average	0	0	0	0	0	0
Standard deviation	0	0	0	0	0	0

* Too Numerous To Count

G4B(www.g4b.go.kr)진위확인코드 : mul2in1x3RU=