REG - WR - 000006 - 2013.001

RECEIVED
DEC 27 2013
8P - AR

Jacob Parker
HES Professional

Marathon Oil Corporation
Rocky Mountain Operation
27 Maverick Springs Rd.
P.O. Box 130
Kinnear, Wyoming 82516
Telephone 307.856.6228 ext. 2237 Mobile 307.699.5304
Fax 307.857.1299
jacobparker@marathonoil.com

Marathon Oil Corporation.

Federal Minor NSR Permit Coordinator
U.S. EPA Region 8
1595 Wynkoop Street, 8P-AR
Denver, CO 80202-1129

via Certified Mail Number:
7010 1670 0001 3087 5345

Dean Goggles
Wind River Environmental Quality Commission
P.O. Box 217
Fort Washakie, WY 82514

via Certified Mail Number:
7010 1670 0001 3087 5338

December 19, 2013

RE: Minor NSR Program Registration Update
Marathon Oil
Circle Ridge Tank Battery

Dear Officers:

Marathon Oil Company (Marathon) is submitting a registration update for the Circle Ridge Tank Battery.The original registration was submitted on February 26, 2013.

In 2014 Marathon Oil intends to restarte the Circle Ridge Enhanced Oil Recovery Project (EOR) using nitrogen as the injection source. This project has been modeled for its Potential to Emit (PTE) for the years 2014-2016. I have attached an updated registration document with the 2011 Actuals and it has the 2014 PTE's.

If you have any questions or require additional information concerning this submittal, please contact me at 307-856-6228 ext. 2237 or via email at jacobparker@marathonoil.com.

Sincerely,

Jacob Parker
HES Professional

cc: Kelly Saltzgiver – Production Superintendent
Justin Lajeunesse – Production Supervisor

OMB Control No. 2060-0003
Approval expires 04/30/2012

UNITED STATES ENVIRONMENTAL PROTECTION AGENCY
FEDERAL MINOR NEW SOURCE REVIEW PROGRAM IN INDIAN COUNTRY
40 CFR 49.151

Registration for Existing Sources
(FORM REG)

Please submit information to following two entities:

Federal Minor NSR Permit Coordinator
U.S. EPA, Region 8
1595 Wynkoop Street, 8P-AR
Denver, CO 80202-1129
R8airpermitting@epa.gov

For more information, visit:
http://www.epa.gov/region08/air/permitting/tmnsr.html

The Tribal Environmental Contact for the specific reservation:

If you need assistance in identifying the appropriate Tribal Environmental Contact and address, please contact: R8airpermitting@epa.gov

A. GENERAL SOURCE INFORMATION

1. Company Name Marathon Oil Corporation	**2. Source Name** Circle Ridge Battery
3. Type of Operation Oil Production	**4. Portable Source?** Yes ☐ No ☑ **5. Temporary Source?** Yes ☐ No ☑
6. NAICS Code 211111	**7. SIC Code** 1311
8. Physical Address (home base for portable sources) 27 Maverick Springs Road Kinnear, WY 82516	

9. Reservation* Wind River	**10. County*** Fremont	**11a. Latitude*** 43.525326	**11b. Longitude*** -109.046092
12a. Quarter-Quarter Section*	**12b. Section***	**12c. Township***	**12d. Range***

* Provide all locations of operation for portable sources

B. CONTACT INFORMATION

1. Owner Name Marathon Oil Corporation	Title
Mailing Address 1501 Stampede Avenue, Cody, WY 82414	
Email Address	
Telephone Number (307) 527-5631	Facsimile Number
2. Operator Name (if different from owner) Marathon Oil Corporation	Title
Mailing Address 1501 Stampede Avenue, Cody, WY 82414	
Email Address	
Telephone Number (307) 527-5631	Facsimile Number
3. Source Contact Jacob Parker	Title HES Professional
Mailing Address 27 Maverick Springs Road, Kinnear, WY 82516	
Email Address jacobparker@marathonoil.com	
Telephone Number (307) 856-6228 ext. 2237	Facsimile Number (307) 857-1299
4. Compliance Contact Jacob Parker	Title HES Professional
Mailing Address 27 Maverick Springs Road, Kinnear, WY 82516	
Email Address jacobparker@marathonoil.com	
Telephone Number (307) 856-6228 ext. 2237	Facsimile Number (307) 857-1299

C. ATTACHMENTS

Include all of the following information as attachments to this form

Narrative description of the operations

Identification and description of all emission units and air pollution generating activities (with the exception of the exempt emissions units and activities listed in §49.153(c)

Identification and description of any existing air pollution control equipment and compliance monitoring devices or activities

Type and amount of each fuel used

Type raw materials used

Production Rates

Operating Schedules

Any existing limitations on source operations affecting emissions or any work practice standards, where applicable, for all regulated NSR pollutants at your source.

Total allowable (potential to emit if there are no legally and practically enforceable restrictions) emissions from the air pollution source for the following air pollutants: particulate matter, PM_{10}, $PM_{2.5}$, sulfur oxides (SOx), nitrogen oxides (NOx), carbon monoxide (CO), volatile organic compound (VOC), lead (Pb) and lead compounds, fluorides (gaseous and particulate), sulfuric acid mist (H_2SO_4), hydrogen sulfide (H_2S), total reduced sulfur (TRS) and reduced sulfur compounds, including all calculations for the estimates.

Estimates of the total actual emissions from the air pollution source for the following air pollutants: particulate matter, PM_{10}, $PM_{2.5}$, sulfur oxides (SO_x), nitrogen oxides (NO_x), carbon monoxide (CO), volatile organic compound (VOC), lead (Pb) and lead compounds, fluorides (gaseous and particulate), sulfuric acid mist (H_2SO_4), hydrogen sulfide (H_2S), total reduced sulfur (TRS) and reduced sulfur compounds, including all calculations for the estimates.

Other

The public reporting and recordkeeping burden for this collection of information is estimated to average 6 hours per response. Send comments on the Agency's need for this information, the accuracy of the provided burden estimates, and any suggested methods for minimizing respondent burden, including through the use of automated collection techniques to the Director, Collection Strategies Division, U.S. Environmental Protection Agency (2822T), 1200 Pennsylvania Ave., NW, Washington, D.C. 20460. Include the OMB control number in any correspondence. Do not send the completed form to this address.

D. TABLE OF ESTIMATED EMISSIONS

The following estimates of the total emissions in tons/year for all pollutants contained in your worksheet stated above should be provided.

Pollutant	2012 Total Actual Emissions (tpy)	2014 Potential Emissions (tpy)	
PM	0.00	0.00	PM - Particulate Matter PM_{10} - Particulate Matter less than 10 microns in size $PM_{2.5}$ - Particulate Matter less than 2.5 microns in size SOx - Sulfur Oxides NOx - Nitrogen Oxides CO - Carbon Monoxide VOC - Volatile Organic Compound Pb - Lead and lead compounds Fluorides - Gaseous and particulates H_2SO_4 - Sulfuric Acid Mist H_2S - Hydrogen Sulfide TRS - Total Reduced Sulfur RSC - Reduced Sulfur Compounds
PM_{10}	0.00	0.00	
$PM_{2.5}$	0.00	0.00	
SO_x	0.65	1.90	
NO_x	1.19	2.11	
CO	1.08	2.02	
VOC	11.8	8.71	
Pb	0.00	0.00	
Fluorides	0.00	0.00	
H_2SO_4	0.00	0.00	
H_2S	3.66	2.67	
TRS	0.00	0.00	
RSC	0.00	0.00	

Emissions calculations must include fugitive emissions if the source is one the following listed sources, pursuant to CAA Section 302(j):

(a) Coal cleaning plants (with thermal dryers);
(b) Kraft pulp mills;
(c) Portland cement plants;
(d) Primary zinc smelters;
(e) Iron and steel mills;
(f) Primary aluminum ore reduction plants;
(g) Primary copper smelters;
(h) Municipal incinerators capable of charging more than 250 tons of refuse per day;
(i) Hydrofluoric, sulfuric, or nitric acid plants;
(j) Petroleum refineries;
(k) Lime plants;
(l) Phosphate rock processing plants;
(m) Coke oven batteries;
(n) Sulfur recovery plants;
(o) Carbon black plants (furnace process);
(p) Primary lead smelters;
(q) Fuel conversion plants;
(r) Sintering plants;
(s) Secondary metal production plants;
(t) Chemical process plants
(u) Fossil-fuel boilers (or combination thereof) totaling more than 250 million British thermal units per hour heat input;
(v) Petroleum storage and transfer units with a total storage capacity exceeding 300,000 barrels;
(w) Taconite ore processing plants;
(x) Glass fiber processing plants;
(y) Charcoal production plants;
(z) Fossil fuel-fired steam electric plants of more that 250 million British thermal units per hour heat input, and
(aa) Any other stationary source category which, as of August 7, 1980, is being regulated under section 111 or 112 of the Act.

Instructions

Please answer all questions. If the item does not apply to the source and its operations write "n/a". If the answer is not known write "unknown".

A. General Source Information

1. Company Name: Provide the complete company name. For corporations, include divisions or subsidiary name, if any.

2. Source Name: Provide the source name. Please note that a source is a site, place, location, etc… that may contain one or more air pollution emitting units.

3. Type of Operation: Indicate the generally accepted name for the operation (i.e., asphalt plant, gas station, dry cleaner, sand & gravel mining, oil and gas well site, tank battery, etc.).

4. Portable Source: Does the source operate in more than one location? Some examples of portable sources include asphalt batch plants and concrete batch plants.

5. Temporary Source: A temporary source, in general, would have emissions that are expected last less than 2 years. Do you expect to cease operations within the next 2 years?

6. NAICS Code: North American Industry Classification System. The NAICS Code for your source can be found at the following link → North American Industry Classification System (http://www.census.gov/epcd/naics/nsic2ndx.htm#S1).

7. SIC Code: Standard Industrial Classification Code. Although the new North American Industry Classification System (NAICS) has replaced the SIC codes, much of the Clean Air Act permitting processes continue to use these codes. The SIC Code for your source can be found at the following link → Standard Industrial Classification Code (http://www.osha.gov/pls/imis/sic_manual.html).

8. Physical Address: Provide the actual address of where the source is operating, not the mailing address. Include the State and the ZIP Code.

9. Reservation: Provide the name of the Indian reservation within which the source is operating.

10. County: Provide the County within which the source is operating.

11a & 11b. Latitude & Longitude: These are GPS (global positioning system) coordinates. This information can be provided in decimal format or degree-minute-second format.

12a – 12d. Section-Township-Range: Please provide these coordinates in Quarter-Quarter Section/Section/Township/Range. (e.g., SW ¼, NE ¼ /S36/T10N/R21E).

B. Contact Information

Please provide the information requested in full.

1. Owners: List the full name (last, middle initial, first) of all owners of the source.

2. Operator: Provide the name of the operator of the source if it is different from the owner(s).

3. Source Contact: The source contact must be the local contact authorized to receive requests for data and information.

4. Compliance Contact: The compliance contact must be the local contact responsible for the source's compliance with this rule. If this is the same as the Source Contact please note this on the form.

C. Attachments

The information requested in the attachments will enable EPA to understand the type of source being registered and the nature and extent of the air pollutants being emitted.

D. Total Emissions

1. Allowable Emissions (See also, Potential to Emit): Emissions rate of a source calculated using the maximum rated capacity of the source (unless the source is subject to practically and legally enforceable limits which restrict the operating rate, or hours of operation, or both) and the most stringent of the following:

   a) Any applicable standards as set forth in 40 CFR parts 60 and 61;

   b) Any applicable Tribal or Federal Implementation Plan emissions limitation, including those with a future compliance date; or

   c) Any emissions rate specified as a federally enforceable permit condition, including those with a future compliance date.

2. Potential to Emit: The maximum capacity of a source to emit a pollutant under its physical and operational design. Any physical or operational limitation on the capacity of the source to emit a pollutant, including air pollution control equipment and restrictions on hours of operation or on the type or amount of material combusted, stored, or processed, shall be treated as part of its design if the limitation or the effect it would have on emissions is enforceable as a practical matter. See Allowable Emissions.

3. Actual Emissions: Estimates of actual emissions must take into account equipment, operating conditions, and air pollution control measures. For a source that operated during the entire calendar year preceding the initial registration submittal, the reported actual emissions typically should be the annual emissions for the preceding calendar year, calculated using the actual operating hours, production rates, in-place control equipment, and types of materials processed, stored, or combusted during the preceding calendar year. However, if you believe that the actual emissions in the preceding calendar year are not representative of the emissions that your source

will actually emit in coming years, you may submit an estimate of projected actual emissions along with the actual emissions from the preceding calendar year and the rationale for the projected actual emissions. For a source that has not operated for an entire year, the actual emissions are the estimated annual emissions for the current calendar year.

4. The emission estimates can be based upon actual test data or, in the absence of such data, upon procedures acceptable to the Reviewing Authority. The following procedures are generally acceptable for estimating emissions from air pollution sources:

   (i) Source-specific emission tests;
   (ii) Mass balance calculations;
   (iii) Published, verifiable emission factors that are applicable to the source. (i.e., manufacturer specifications).
   (iv) Other engineering calculations; or
   (v) Other procedures to estimate emissions specifically approved by the Reviewing Authority.

5. Guidance for estimating emissions can be found at http://www.epa.gov/ttn/chief/efpac/index.html.

Attachments: Section C

Marathon Oil

POTENTIAL TO EMIT

CIRCLE RIDGE FIELD

Marathon Oil Corporation

Prepared for:

Marathon Oil Corporation
1501 Stampede Avenue
Cody, Wyoming 82414

Prepared by:

Compliance Partners™

4038 Timberline Road, Suite 100
Fort Collins, Colorado 80505
970/206-4443

DECEMBER 2013

TABLE OF CONTENTS

Section Page

1.0 INTRODUCTION 1
- 1.1 Production Forecasts 1
- 1.2 Process Description 1
- 1.3 Gas Composition by Year 2

2.0 ANNUAL EMISSION CALCULATIONS 4
- 2.1 2014 Emissions PTE 4
  - 2.1.1 2014 Flare Emissions 6
  - 2.1.2 Run Tank Emissions 2014 8
  - 2.1.3 Overflow Tank Emissions 2014 9
  - 2.1.4 Produced Water Skim Tank Emissions 2014 10
- 2.2 2015 Emissions PTE 11
  - 2.2.1 2015 Flare Emissions 13
  - 2.2.2 Run Tank Emissions 2015 15
  - 2.2.3 Overflow Tank Emissions 2015 16
  - 2.2.4 Produced Water Skim Tank Emissions 2015 17
- 2.3 2016 Emissions PTE 18
  - 2.3.1 2016 Flare Emissions 20
  - 2.3.2 Run Tank Emissions 2016 22
  - 2.3.3 Overflow Tank Emissions 2016 23
  - 2.3.4 Produced Water Skim Tank Emissions 2016 24

3.0 CONSTANT EMISSIONS SOURCES 26
- 3.1 Heating Equipment 26
  - 3.1.1 Heater Treaters 26
  - 3.1.2 Water Heater 27
  - 3.1.3 Steam Generator 28
- 3.2 Tank Emissions 29
  - 3.2.1 Concrete Tank Emissions 29
  - 3.2.2 Steamer Tank Emissions 30
  - 3.2.3 Reject Tank Estimated Emissions 31

TABLE OF TABLES

Tables Page

Table 1: Production Information Provided 1
Table 2: Gas Compositions Used to Estimate Flare Emissions Phosphoria 2
Table 3: Gas Compositions Used to Estimate Flare Emissions Tensleep 3
Table 4: Circle Ridge Field Potential to Emit 2014 5
Table 5: Circle Ridge Field HAP Emissions 2014 5
Table 6: Flare Gas Composition and Volume 2014 6
Table 7: Flare Emissions 2014 7
Table 8: Run Tank Emissions 2014 8
Table 9: Overflow Tank Emissions 2014 9
Table 10: Produced Water Tank Emissions 2014 10
Table 11: Controlled Produced Water Tank Emissions 2014 11
Table 12: Circle Ridge Field Potential to Emit 2015 12
Table 13: Circle Ridge Field HAP Emissions 2015 12
Table 14: Flare Gas Composition and Volume 2015 13
Table 15: Flare Emissions 2015 14
Table 16: Run Tank Emissions 2015 15
Table 17: Overflow Tank Emissions 2015 16
Table 18: Produced Water Tank Emissions 2015 17
Table 19: Controlled Produced Water Tank Emissions 2015 18
Table 20: Circle Ridge Field Potential to Emit 2016 19
Table 21: Circle Ridge Field HAP Emissions 2016 19
Table 22: Flare Gas Composition and Volume 2016 20
Table 23: Flare Emissions 2016 21
Table 24: Run Tank Emissions 2016 22
Table 25: Overflow Tank Emissions 2016 23
Table 26: Produced Water Tank Emissions 2016 24
Table 27: Controlled Produced Water Tank Emissions 2016 25
Table 28: Heater Treaters 1&2 26
Table 29: Water Heater Emissions 27
Table 30: Steam Generator Emissions 28
Table 31: Concrete Tank Emissions 29
Table 32: Steamer Tank Emissions 30
Table 33: Reject Tank Estimated Emissions 31

1.0 INTRODUCTION

Emissions calculations for the Circle Ridge field are calculated with the aid of projected data provided by marathon and a myriad of assumptions.

1.1 Production Forecasts

Projected production numbers for 2014 through 2016 were provided as a basis for the emissions calculations. Some of these values will appear in the calculations for each individual source but have been compiled in Table 1 below for quick reference.

Table 1: Production Information Provided

Circle Ridge Field anticipated and actual production (Annual Average)				
Production	Units	2014	2015	2016
Treater Gas to Flare	Mscfd	0.64	0.63	0.6
Oil	bbl/day	1,793	1513	845
Water	bbl/day	107,448	151,884	150,899
Nitrogen injection projected increase				
Production	Units	2014	2015	2016
Recycle Gas	Mscfd	230	350	360
Oil	bbl/day	130	200	200
Water	bbl/day	2500	4500	3300
Total Forecasted Production				
Production	Units	2014	2015	2016
Recycle Gas to Flare[2]	MMscf total	2.1	6.39	6.57
Treater Gas to Flare[1]	Mscfd	0.768	0.756	0.72
Oil	bbl/day	1,923	1,713	1,045
Water	bbl/day	109,948	156,384	154,199

[1] Treater Gas is increased by 20% to account for variations in production

[2] 5% of total recycled gas is sent to the flare

1.2 Process Description

Oil, water and gas enter the facility and enter two parallel heated three phase separators (heater treaters). The pressure and temperature in the heater treaters are 20 psig and 125 °F. Water from the treaters is routed to the atmospheric produced water skim tanks where any remaining hydrocarbons are skimmed from the water's surface before the water is re-injected. Vapors from the 10,000 bbl water skim tank are controlled by VRU (which will be re-injected) and emissions from the 5,000 bbl water tank are released to the atmosphere. Oil from the treaters enters a series of atmospheric oil tanks, all vapors are vented to the atmosphere.

The facility will be adding a nitrogen injection system to pressurize the oil reservoir for enhanced oil recovery. The equipment used for nitrogen separation and injection is power by electricity and will therefore have no onsite associated emissions.

1.3 Gas Composition by Year

The nitrogen injection process will produce a significant amount of recycle gas. This recycle gas will vary in composition as the nitrogen injection process proceeds. Because some of this gas maybe controlled by the flare estimated compositions were provided for each year of production table shows the gas compositions used to calculate emissions. The values in blue are specified compositional estimates provided by Marathon personnel. The values in orange come from the analysis from which the aforementioned compositional estimates are derived. The treater gas composition reflects the sample analysis provided in Attachment A. Two recycle gas anticipated compositions were provided and their compositions are presented in Tables 2 and 3. The flared recycle gas is a 50/50 mix of the two compositions.

Table 2: Gas Compositions Used to Estimate Flare Emissions Phosphoria

Species	MW	Mole %					LHV	HHV
		Treater Gas	2012 Sample	2014 Recycle Gas	2015 Recycle Gas	2016 Recycle Gas	Btu/scf	Btu/scf
Hydrogen Sulfide	34	1.138	0.071	0.071	0.071	0.070	586.8	637.1
Helium	8	0.000	0.040	0.040	0.040	0.040	0	0
Hydrogen	2	0.000	0.260	0.261	0.260	0.259	273.8	324.2
Carbon Dioxide	44	4.238	11.930	11.983	10.062	8.844	0	0
Nitrogen	28	25.740	36.890	37.053	39.235	40.692	0	0
Methane	16	66.693	47.758	47.970	47.720	47.529	911	1012
Ethane	30	0.367	0.391	0.393	0.391	0.389	1631	1783
Propane	44	0.207	0.067	0.030	0.030	0.027	2353	2557
Isobutane	58	0.088	0.041	0.019	0.019	0.017	3094	3354
n-Butane	58	0.140	0.063	0.028	0.029	0.026	3101	3369
IsoPentane	72	0.174	0.091	0.041	0.041	0.037	3698	4001
n-Pentane	72	0.128	0.063	0.028	0.029	0.026	3709	4009
cyclopentane	70	0.000	0.001	0.000	0.000	0.000	3512.1	3763.7
n-hexane	86	0.043	0.066	0.030	0.030	0.027	4403.8	4755.9
Cyclohexane	84	0.000	0.004	0.002	0.002	0.002	4179.7	4481.7
hexanes	86	0.378	0.138	0.062	0.063	0.056	4403.8	4755.9
Heptane	100	0.339	0.135	0.061	0.061	0.055	5100	5502.5
methylcyclohexane	98	0.000	0.011	0.005	0.005	0.004	4863.6	5215.9
2,2,4-trimethylpentane	114	0.000	0.000	0.000	0.000	0.000	5796.1	6248.9
Benzene	78	0.005	0.000	0.000	0.000	0.000	3590.9	3741.8
Toluene	92	0.014	0.001	0.000	0.000	0.000	4273.6	4475
Ethylbenzene	106	0.006	0.000	0.000	0.000	0.000	4970.5	5222.2
Xylenes(ortho)	106	0.069	0.002	0.001	0.001	0.001	4958.2	5209.9
C8+	114	0.235	0.116	0.052	0.053	0.047	5796.1	6248.9
Oxygen	32	0.000	1.860	1.869	1.859	1.852	0	0
		100.00	100.00	100.00	100.00	100.000		

Calculated Composition Characteristics					
VOC Mole%	1.824	0.799	0.360	0.363	0.325
HAPS Mole%	0.136	0.069	0.031	0.031	0.028
inert Mole%	0.000	2.160	2.170	2.159	2.151
Average MW lb/lbmole	21.74	24.63	24.37	24.09	23.90
Average VOC MW lb/lbmole	82.46	82.77	82.77	82.77	82.77
HHV Btu/scf	771.75	528.28	510.30	507.87	504.14
LHV Btu/scf	697.20	476.56	459.86	457.67	454.27

Composition Specifications Provided for Each Year			
VOC Mole%	0.36	0.363	0.325
HAPS Mole%	0.031	0.031	0.028
Inert Mole%	2.17	2.159	2.151

Table 3: Gas Compositions Used to Estimate Flare Emissions Tensleep

Species	MW	Mole %					LHV	HHV
		Treater Gas	2012 sample	2014 Recycle Gas	2015 Recycle Gas	2016 Recycle Gas	Btu/scf	Btu/scf
Hydrogen Sulfide	34	1.138	1.845	1.884	0.334	0.212	586.8	637.1
Helium	8	0.000	0.020	0.020	0.020	0.021	0	0
Hydrogen	2	0.000	0.010	0.010	0.010	0.011	273.8	324.2
Carbon Dioxide	44	4.238	5.190	5.300	4.324	4.092	0	0
Nitrogen	28	25.740	19.710	20.128	20.706	23.123	0	0
Methane	16	66.693	66.207	67.610	69.715	67.395	911	1012
Ethane	30	0.367	3.038	3.102	2.998	3.215	1631	1783
Propane	44	0.207	1.310	0.405	0.398	0.383	2353	2557
Isobutane	58	0.088	0.543	0.168	0.165	0.159	3094	3354
n-Butane	58	0.140	0.221	0.068	0.067	0.064	3101	3369
IsoPentane	72	0.174	0.347	0.108	0.106	0.102	3698	4001
n-Pentane	72	0.128	0.052	0.016	0.016	0.015	3709	4009
cyclopentane	70	0.000	0.007	0.002	0.002	0.002	3512.1	3763.7
n-hexane	86	0.043	0.043	0.013	0.013	0.013	4403.8	4755.9
Cyclohexane	84	0.000	0.010	0.003	0.003	0.003	4179.7	4481.7
hexanes	86	0.378	0.172	0.053	0.052	0.050	4403.8	4755.9
Heptane	100	0.339	0.131	0.041	0.040	0.038	5100	5502.5
methylcyclohexane	98	0.000	0.013	0.004	0.004	0.004	4863.6	5215.9
2,2,4-trimethylpentane	114	0.000	0.000	0.000	0.000	0.000	5796.1	6248.9
Benzene	78	0.005	0.004	0.001	0.001	0.001	3590.9	3741.8
Toluene	92	0.014	0.004	0.001	0.001	0.001	4273.6	4475
Ethylbenzene	106	0.006	0.001	0.000	0.000	0.000	4970.5	5222.2
Xylenes(ortho)	106	0.069	0.003	0.001	0.001	0.001	4958.2	5209.9
C8+	114	0.235	0.120	0.037	0.036	0.035	5796.1	6248.9
Oxygen	32	0.000	1.001	1.022	0.988	1.059	0	0
		100.00	100.00	100.00	100.00	100.00		

Calculated Composition Characteristics					
VOC Mole%	1.824	2.979	0.922	0.905	0.871
HAPS Mole%	0.136	0.056	0.017	0.017	0.016
inert Mole%	0.000	1.031	1.053	1.018	1.091
Average MW lb/lbmole	21.74	22.05	21.24	20.73	20.96
Average VOC MW lb/lbmole	82.46	60.26	60.26	60.26	60.26
HHV Btu/scf	771.75	837.88	783.10	792.09	770.54
LHV Btu/scf	697.20	757.63	706.72	714.57	695.18

Composition Specifications Provided for Each Year			
VOC Mole%	0.922	0.905	0.871
HAPS Mole%	0.017	0.017	0.016
Inert Mole%	1.053	1.018	1.091

2.0 ANNUAL EMISSION CALCULATIONS

Emissions for each year will be presented separately and organized by year. Assumptions and specifications used to calculate emissions for each source will be presented in the description of that source. General assumptions by source are also listed below:

- The Pop and rupture tank is considered to have negligible emissions
- Emissions for the Steamer tank and Reject tank assume oil throughputs of 90 and 80 barrels per day respectively. This does not change by year and these sources have the same emissions for each year.
- The concrete tanks are assumed to have a weekly throughput of 160 barrels per week that remains constant year to year.
- All heating equipment is assumed to burn sweet gas provided by phoenix. This assumption allows the use of AP-42 emission factors
- Emissions for the flare, run tank, overflow tank, and produced water skim tanks vary year by year proportional to the anticipated oil, water and gas production for each year.
- No produced water analysis was provided so ProMax was used to estimate water composition and subsequently water tank emissions. Pure water was mixed with the oil and gas flows which stripped H2S and methane from the gas and oil samples. To ensure H2S and Methane concentrations in the water were representative of actual values a supply of 50% methane and H2S was mixed with the water, gas and oil samples. The volume of the supplemental gas was varied until the treater gas H2S and Methane concentrations were nearly equal to those from the treater gas analysis.
- All Tanks are assumed to be tank in color and in good condition, atmospheric pressure at the facility is assumed to be 12.1 psia.

Sources that have constant emissions such as the heating equipment, concrete tanks, steamer tanks and reject tank will be presented in Section 3, Constant Emission Sources.

2.1 2014 Emissions PTE

Emissions for each source projected for 2014 are summarized in Table 4 and Table 5 on the following page.

Table 4: Circle Ridge Field Potential to Emit 2014

Source ID	Description	Rating	NO_X		CO		VOC		SO_2		H_2S		CO_2e		HAPs	
			lb/hr	tpy	lb/hr	tpy	lb/hr	tpy	lb/hr	tpy	lb/hr	tpy	lb/hr	tpy	lb/hr	tpy
H1	Treater 1	1 MMBtu/hr	0.20	0.86	0.16	0.72	0.01	0.05	0.00	0.00	--	--	234	1025	0.00	0.02
H2	Treater 2	1 MMBtu/hr	0.20	0.86	0.16	0.72	0.01	0.05	0.00	0.00	--	--	234	1025	0.00	0.02
H3	Water Heater	0.3 MMBtu/hr	0.03	0.13	0.02	0.11	0.00	0.01	0.00	0.00	--	--	35	154	0.00	0.00
H4	Steam Generator	0.5 MMBtu/hr	0.05	0.21	0.04	0.18	0.00	0.01	0.00	0.00	--	--	59	256	0.00	0.00
T1	Run Tank	400 bbl	--	--	--	--	1.00	4.40	--	--	0.34	1.51	152	667	0.05	0.21
T2	Overflow Tank	1000 bbl	--	--	--	--	0.19	0.82	--	--	0.06	0.26	10	44	0.01	0.04
T3	Reject Tank	1000 bbl	--	--	--	--	0.05	0.22	--	--	0.02	0.07	3	12	0.00	0.01
T4	Steamer Tank	500 bbl	--	--	--	--	0.03	0.13	--	--	0.01	0.04	2	7	0.00	0.01
T5&T6	PW Skimmer Tanks	5,000 and 10,000 bbl	--	--	--	--	0.07	0.29	--	--	0.16	0.70	19	82	0.00	0.01
T7	Concrete Tanks	160 bbl/week	--	--	--	--	0.61	2.65	--	--	0.01	0.04	0	2	0.04	0.16
F1	Flare		0.01	0.05	0.07	0.29	0.02	0.09	0.43	1.90	0.01	0.05		129	0.00	0.01
		Total:	**0.48**	**2.11**	**0.46**	**2.02**	**1.99**	**8.71**	**0.44**	**1.90**	**0.61**	**2.67**	**747**	**3402**	**0.11**	**0.48**

Table 5: Circle Ridge Field HAP Emissions 2014

Source ID	Description	Rating	Benzene		Toluene		Ethylbenzene		Xylenes		n-Hexane		2,2,4-TMP		HCOH		HAPs	
			lb/hr	tpy	lb/hr	tpy	lb/hr	tpy	lb/hr	tpy	lb/hr	tpy	lb/hr	tpy	lb/hr	tpy	lb/hr	tpy
H1	Treater 1	1 MMBtu/hr	0.00	0.00	0.00	0.00	--	--	--	--	0.00	0.02	--	--	0.00	0.00	0.00	0.02
H2	Treater 2	1 MMBtu/hr	0.00	0.00	0.00	0.00	--	--	--	--	0.00	0.02	--	--	0.00	0.00	0.00	0.02
H3	Water Heater	0.3 MMBtu/hr	0.00	0.00	0.00	0.00	--	--	--	--	0.00	0.00	--	--	0.00	0.00	0.00	0.00
H4	Steam Generator	0.5 MMBtu/hr	0.00	0.00	0.00	0.00	--	--	--	--	0.00	0.00	--	--	0.00	0.00	0.00	0.00
T1	Run Tank	400 bbl	0.00	0.02	0.00	0.01	0.00	0.00	0.00	0.00	0.04	0.16	0.00	0.01	--	--	0.05	0.21
T2	Overflow Tank	1000 bbl	0.00	0.00	0.00	0.00	0.00	0.00	0.00	0.00	0.01	0.03	0.00	0.00	--	--	0.01	0.04
T3	Reject Tank	1000 bbl	0.00	0.00	0.00	0.00	0.00	0.00	0.00	0.00	0.00	0.01	0.00	0.00	--	--	0.00	0.01
T4	Steamer Tank	500 bbl	0.00	0.00	0.00	0.00	0.00	0.00	0.00	0.00	0.00	0.00	0.00	0.00	--	--	0.00	0.01
T5&T6	PW Skimmer Tanks	5,000 and 10,000 bbl	0.00	0.00	0.00	0.00	0.00	0.00	0.00	0.00	0.00	0.00	0.00	0.00	--	--	0.00	0.01
T7	Concrete Tanks	160 bbl/week	0.00	0.01	0.00	0.02	0.00	0.01	0.01	0.02	0.02	0.09	0.00	0.01	--	--	0.04	0.16
F1	Flare		0.00	0.00	0.00	0.00	0.00	0.00	0.00	0.00	0.00	0.00	0.00	0.00	0.00	0.00	0.00	0.01
		Total:	**0.01**	**0.03**	**0.01**	**0.03**	**0.00**	**0.01**	**0.01**	**0.03**	**0.07**	**0.34**	**0.01**	**0.02**	**0.00**	**0.00**	**0.11**	**0.48**

2.1.1 2014 Flare Emissions

Flare emissions are calculated assuming all gas from the treater is controlled by the facilities flare. It is also assumed that recycle gas from the gas injection system may have to be sent to the flare 5% of the time. The flare is estimated to have 95% combustion efficiency. Both the recycle gas and treater gas are combined in Table 6 to provide an average flare gas composition which is used to estimate emissions provided in Table 7.

Table 6: Flare Gas Composition and Volume 2014

Component	MW	Reactive carbons (Per Mole)	HHV Btu/scf	Recycle Vapors Tensleep	Treater Gas	Recycle Vapors Phosphoria	Average composition
				Mole %			
Hydrogen Sulfide	34	0	637.1	1.884	1.138	0.071	0.996
Helium	8	0	0	0.020	0.000	0.040	0.027
Hydrogen	2	0	324.2	0.010	0.000	0.261	0.120
Carbon Dioxide	44	0	0.0	5.300	4.238	11.983	8.123
Nitrogen	28	0	0.0	20.128	25.740	37.053	28.255
Methane	16	1	1010.0	67.610	66.693	47.970	58.839
Ethane	30	2	1769.6	3.102	0.367	0.393	1.585
Propane	44	3	2518.7	0.405	0.207	0.030	0.216
iso-Butane	58.1	4	3257.5	0.168	0.088	0.019	0.093
Butane	58.1	4	3265.3	0.068	0.140	0.028	0.059
Isopentane	72.2	5	4000.9	0.108	0.174	0.041	0.086
n-pentane	72.2	5	4008.7	0.016	0.128	0.028	0.035
Cyclopentane	70	5	3763.7	0.002	0.000	0.000	0.001
n-hexane	86.2	6	4756.0	0.013	0.043	0.030	0.024
Cyclohexane	84	6	4481.7	0.003	0.000	0.002	0.002
Hexanes	86	6	4755.9	0.053	0.378	0.062	0.095
Heptanes	100.2	7	5501.0	0.041	0.339	0.061	0.085
Methylcyclohexane	98	7	5215.9	0.004	0.000	0.005	0.004
2,2,4 Trimethlypentane	114.2	8	6231.6	0.000	0.000	0.000	0.000
Benzene	78.1	6	3741.9	0.001	0.005	0.000	0.001
Toluene	92.1	7	4474.9	0.001	0.014	0.000	0.002
Ethylbenzene	106.2	8	5222.0	0.000	0.006	0.000	0.001
Xylene	106.2	8	5207.7	0.001	0.069	0.001	0.009
Octanes +	114.2	8	6248.9	0.037	0.235	0.052	0.067
Oxygen	32	0	0	1.022	0.000	1.869	1.275
Water	18	0	0.0	0.000	0.000	0.000	0.000
		Total :		100.0	100.0	100.0	100.0
Flare Efficiency	FeedRate		scf/hr	119.79	32.00	119.79	271.58
95%	Average MW		lb/lbmole	21.24	21.75	24.37	22.68
Average Carbons/mole	Heat Content		Btu/scf	780.94	770.05	509.23	659.81
0.66	Energy Rate		MMBtu/hr	0.09	0.02	0.06	**0.18**

Table 7: Flare Emissions 2014

2014 Average Treater Gas Flow Rate	768	scf/day
	32	scf/hr
Recycle Vapor Flare Supply Rate	2.10	MMscf
	239.58	scf/hr

Combustion Emissions

Species	**lb/MMBTU** *lb/MMscf*	lb/hr	tpy
NO_X[1]	**0.068**	0.012	0.053
FORM[2]	*0.075*	0.000	0.000
CO[1]	**0.37**	0.07	0.29

[1]-CO and NO_X emission factors from AP-42 Tables 13.5-1 and 13.5-2

[2]-HCOH emission factor from AP-42 Table 1.4-3

GHG Emissions

Non Combusted emissions	lb/hr	tpy
CO_2	2.56	11.22
CH_4	0.34	1.48
Combusted Emissions	**lb/hr**	**tpy**
CO_2	19.73	86.41
N_2O[3]	0.00004	0.00

[3]-N_2O EF based on GHG Reporting Rule equation W-40

Total GHG	lb/hr	tpy
CO_2	22.29	97.62
CH_4	0.34	1.48
SO_2	0.43	1.90
N_2O	0.00	0.00
CO_2e	29.38	128.70

Species	lb/hr	tpy
VOCs	0.020	0.087
Benzene	0.000	0.000
Toluene	0.000	0.000
Ethylbenzene	0.000	0.000
2,2,4-trimethylpentane	0.000	0.000
Xylene	0.000	0.001
n-hexane	0.001	0.003
H_2S	0.012	0.053
HAPs	0.001	0.005

2.1.2 Run Tank Emissions 2014

Emission calculations assume all oil flash emissions originate from the run tank. All other oil tanks generate only working and breathing losses. Table 8 summarizes the run tank estimated emissions from the 2014 ProMax emission simulation.

Table 8: Run Tank Emissions 2014

2014 Oil Tank Emissions		
Oil throughput	1,923	bbl/day
Tank dimensions	12X20	feet
Average Liquid Height	15.00	feet

Emissions from Promax Simulation
Marathon - Circle Ridge #2 Treater Pressurized Crude Oil (11/4/2011)
Circle Ridge Treater Gas Analysis (2/21/2010)

Emissions (tpy)			
Component	Working Breathing	Flash	Total
Hydrogen Sulfide	0.219	1.288	1.507
Oxygen	0.000	0.000	0.000
Carbon Dioxide	0.047	0.282	0.329
Nitrogen	0.158	11.890	12.048
Methane	1.797	29.960	31.757
Ethane	0.130	0.503	0.634
Propane	0.189	0.904	1.093
Isobutane	0.057	0.295	0.352
Butane	0.111	0.597	0.708
Isopentane	0.038	0.200	0.238
Pentane	0.059	0.308	0.367
2-Methylpentane	0.018	0.095	0.112
3-Methylpentane	0.006	0.035	0.041
n-Hexane	0.025	0.138	0.163
Heptane	0.054	0.320	0.374
Octane	0.051	0.316	0.368
Nonane	0.009	0.058	0.067
Decane	0.062	0.401	0.463
Benzene	0.002	0.016	0.018
Toluene	0.001	0.012	0.013
Ethylbenzene	0.000	0.002	0.002
ortho-Xylene	0.001	0.004	0.005
2,2,4-Trimethylpentane	0.002	0.010	0.012
Water	0.000	0.994	0.994
Total:	3.037	48.628	51.665
VOC Emissions	0.686	3.710	4.396
Hap Emissions	0.031	0.182	0.213

2.1.3 Overflow Tank Emissions 2014

Overflow tank emissions assume the entire amount of oil produced at the facility is routed through the tank. Estimated working and breathing losses from the tank are located in Table 9 below.

Table 9: Overflow Tank Emissions 2014

2014 Oil Tank Emissions		
Oil throughput	1,923	bbl/day
Tank dimensions	21.5X16	feet
Average Liquid Height	5.00	feet

Emissions from Promax Simulation
Marathon - Circle Ridge #2 Treater Pressurized Crude Oil (11/4/2011)
Circle Ridge Treater Gas Analysis (2/21/2010)

Emissions (tpy)			
Component	Working Breathing	Flash	Total
Hydrogen Sulfide	0.259	0.000	0.259
Oxygen	0.000	0.000	0.000
Carbon Dioxide	0.055	0.000	0.055
Nitrogen	0.187	0.000	0.187
Methane	2.107	0.000	2.107
Ethane	0.154	0.000	0.154
Propane	0.226	0.000	0.226
Isobutane	0.068	0.000	0.068
Butane	0.133	0.000	0.133
Isopentane	0.046	0.000	0.046
Pentane	0.070	0.000	0.070
2-Methylpentane	0.021	0.000	0.021
3-Methylpentane	0.008	0.000	0.008
n-Hexane	0.030	0.000	0.030
Heptane	0.065	0.000	0.065
Octane	0.062	0.000	0.062
Nonane	0.011	0.000	0.011
Decane	0.075	0.000	0.075
Benzene	0.002	0.000	0.002
Toluene	0.002	0.000	0.002
Ethylbenzene	0.000	0.000	0.000
ortho-Xylene	0.001	0.000	0.001
2,2,4-Trimethylpentane	0.002	0.000	0.002
Water	0.000	0.000	0.000
Total:	3.582	0.000	3.582
VOC Emissions	0.820	0.000	0.820
Hap Emissions	0.037	0.000	0.037

2.1.4 Produced Water Skim Tank Emissions 2014

Flash emissions are all attributed to a single tank (the 10,000 bbl tank) and calculations assume the tanks operate in series. It is estimated that 5% of the time (VRU downtime) vapors from the 10,000 bbl water tank are released to the atmosphere. Estimated vapors from the produced water tanks are presenting in Table 10 while total emissions from the tanks factoring the use of the VRU are presented in Table 11.

Table 10: Produced Water Tank Emissions 2014

2014 Water Tank Emissions					
Tank 5			**Tank 6**		
Water throughput	109,948	bbl/day	Water throughput	109,948	bbl/day
Tank dimensions	38.5X24	feet	Tank dimensions	55X24	feet
Tank Volume	5,000	barrels	Tank Volume	10,000	barrels
Average Liquid Height	10.00	feet	Average Liquid Height	10.00	feet

Emissions from Promax Simulation
Marathon - Circle Ridge #2 Treater Pressurized Crude Oil (11/4/2011)
Circle Ridge Treater Gas Analysis (2/21/2010)

Emissions (tpy)					
Component	Tank 5		Tank 6		Total
	Working Breathing	Flash	Working Breathing	Flash	
Hydrogen Sulfide	0.534	0.000	0.551	2.852	3.938
Oxygen	0.000	0.000	0.000	0.000	0.000
Carbon Dioxide	0.125	0.000	0.130	0.645	0.900
Nitrogen	0.097	0.000	0.108	32.800	33.006
Methane	0.556	0.000	0.606	66.090	67.252
Ethane	0.006	0.000	0.006	0.853	0.866
Propane	0.002	0.000	0.002	1.273	1.278
Isobutane	0.000	0.000	0.000	0.343	0.343
Butane	0.000	0.000	0.000	1.185	1.186
Isopentane	0.000	0.000	0.000	0.329	0.329
Pentane	0.000	0.000	0.000	0.633	0.633
2-Methylpentane	0.000	0.000	0.000	0.157	0.157
3-Methylpentane	0.000	0.000	0.000	0.086	0.086
n-Hexane	0.000	0.000	0.000	0.202	0.202
Heptane	0.000	0.000	0.000	0.247	0.247
Octane	0.000	0.000	0.000	0.462	0.462
Nonane	0.000	0.000	0.000	0.124	0.124
Decane	0.000	0.000	0.000	0.681	0.681
Benzene	0.000	0.000	0.000	0.045	0.046
Toluene	0.000	0.000	0.000	0.041	0.041
Ethylbenzene	0.000	0.000	0.000	0.005	0.005
ortho-Xylene	0.000	0.000	0.000	0.016	0.016
2,2,4-Trimethylpentane	0.000	0.000	0.000	0.004	0.004
Water	12.230	0.000	12.350	2.272	26.852
Total:	13.551	0.000	13.755	111.346	138.652
VOC Emissions	0.003	0.000	0.003	5.833	5.839
Hap Emissions	0.000	0.000	0.000	0.314	0.314

Table 11: Controlled Produced Water Tank Emissions 2014

Species	lb/hour	tpy
VOC	0.07	0.29
H2S	0.16	0.70
CO2	0.04	0.16
CH4	0.89	3.89
CO2e	18.69	81.86
Benzene	0.00	0.00
Toluene	0.00	0.00
Ethylbenzene	0.00	0.00
Xylene	0.00	0.00
n-Hexane	0.00	0.00
2,2,4-Trimethylpentane	0.00	0.00

2.2 2015 Emissions PTE

Emissions for each source projected for 2015 are summarized in Table 12 and Table 13 on the following page.

Table 12: Circle Ridge Field Potential to Emit 2015

Source ID	Description	Rating	NO_X		CO		VOC		SO_2		H_2S		CO_2e		HAPs	
			lb/hr	tpy	lb/hr	tpy	lb/hr	tpy	lb/hr	tpy	lb/hr	tpy	lb/hr	tpy	lb/hr	tpy
H1	Treater 1	1 MMBtu/hr	0.20	0.86	0.16	0.72	0.01	0.05	0.00	0.00	--	--	234	1025	0.00	0.02
H2	Treater 2	1 MMBtu/hr	0.20	0.86	0.16	0.72	0.01	0.05	0.00	0.00	--	--	234	1025	0.00	0.02
H3	Water Heater	0.3 MMBtu/hr	0.03	0.13	0.02	0.11	0.00	0.01	0.00	0.00	--	--	35	154	0.00	0.00
H4	Steam Generator	0.5 MMBtu/hr	0.05	0.21	0.04	0.18	0.00	0.01	0.00	0.00	--	--	59	256	0.00	0.00
T1	Run Tank	400 bbl	--	--	--	--	0.89	3.89	--	--	0.31	1.36	140	615	0.04	0.19
T2	Overflow Tank	1000 bbl	--	--	--	--	0.17	0.74	--	--	0.05	0.24	9	41	0.01	0.03
T3	Reject Tank	1000 bbl	--	--	--	--	0.05	0.22	--	--	0.02	0.07	3	12	0.00	0.01
T4	Steamer Tank	500 bbl	--	--	--	--	0.03	0.13	--	--	0.01	0.04	2	7	0.00	0.01
T5&T6	PW Skimmer Tanks	5,000 and 10,000 bbl	--	--	--	--	0.09	0.41	--	--	0.23	0.99	27	120	0.00	0.01
T7	Concrete Tanks	160 bbl/week	--	--	--	--	0.61	2.65	--	--	0.01	0.04	0	2	0.04	0.16
F1	Flare		0.03	0.15	0.18	0.81	0.05	0.21	0.29	1.29	0.01	0.04	81	356	0.00	0.01
		Total:	**0.50**	**2.21**	**0.58**	**2.54**	**1.91**	**8.36**	**0.30**	**1.29**	**0.63**	**2.78**	**825**	**3611**	**0.10**	**0.46**

Table 13: Circle Ridge Field HAP Emissions 2015

Source ID	Description	Rating	Benzene		Toluene		Ethylbenzene		Xylenes		n-Hexane		2,2,4-TMP		HCOH		HAPs	
			lb/hr	tpy	lb/hr	tpy	lb/hr	tpy	lb/hr	tpy	lb/hr	tpy	lb/hr	tpy	lb/hr	tpy	lb/hr	tpy
H1	Treater 1	1 MMBtu/hr	0.00	0.00	0.00	0.00	--	--	--	--	0.00	0.02	--	--	0.00	0.00	0.00	0.02
H2	Treater 2	1 MMBtu/hr	0.00	0.00	0.00	0.00	--	--	--	--	0.00	0.02	--	--	0.00	0.00	0.00	0.02
H3	Water Heater	0.3 MMBtu/hr	0.00	0.00	0.00	0.00	--	--	--	--	0.00	0.00	--	--	0.00	0.00	0.00	0.00
H4	Steam Generator	0.5 MMBtu/hr	0.00	0.00	0.00	0.00	--	--	--	--	0.00	0.00	--	--	0.00	0.00	0.00	0.00
T1	Run Tank	400 bbl	0.00	0.01	0.00	0.01	0.00	0.00	0.00	0.00	0.03	0.15	0.00	0.01	--	--	0.04	0.19
T2	Overflow Tank	1000 bbl	0.00	0.00	0.00	0.00	0.00	0.00	0.00	0.00	0.01	0.03	0.00	0.00	--	--	0.01	0.03
T3	Reject Tank	1000 bbl	0.00	0.00	0.00	0.00	0.00	0.00	0.00	0.00	0.00	0.01	0.00	0.00	--	--	0.00	0.01
T4	Steamer Tank	500 bbl	0.00	0.00	0.00	0.00	0.00	0.00	0.00	0.00	0.00	0.00	0.00	0.00	--	--	0.00	0.01
T5&T6	PW Skimmer Tanks	5,000 and 10,000 bbl	0.00	0.00	0.00	0.00	0.00	0.00	0.00	0.00	0.00	0.00	0.00	0.00	--	--	0.00	0.01
T7	Concrete Tanks	160 bbl/week	0.00	0.01	0.00	0.02	0.00	0.01	0.01	0.02	0.02	0.09	0.00	0.01	--	--	0.04	0.16
F1	Flare		0.00	0.00	0.00	0.00	0.00	0.00	0.00	0.00	0.00	0.01	0.00	0.00	0.00	0.00	0.00	0.01
		Total:	**0.01**	**0.03**	**0.01**	**0.03**	**0.00**	**0.01**	**0.01**	**0.03**	**0.07**	**0.33**	**0.01**	**0.02**	**0.00**	**0.00**	**0.10**	**0.46**

2.2.1 2015 Flare Emissions

Flare emissions are calculated assuming all gas from the treater is controlled by the facilities flare. It is also assumed that recycle gas from the gas injection system may have to be sent to the flare 5% of the time. The flare is estimated to have 95% combustion efficiency. Both the recycle gas and treater gas are combined in Table 14 to provide an average flare gas composition which is used to estimate emissions provided in Table 15.

Table 14: Flare Gas Composition and Volume 2015

Component	MW	Reactive carbons (Per Mole)	HHV Btu/scf	Recyle Vapors Tensleep	Treater Gas	Recycle Vapors phosphoria	Average composition
				Mole %			
Hydrogen Sulfide	34	0	637.1	0.334	1.138	0.071	0.241
Helium	8	0	0	0.020	0.000	0.040	0.029
Hydrogen	2	0	324.2	0.010	0.000	0.260	0.129
Carbon Dioxide	44	0	0.0	4.324	4.238	10.062	7.071
Nitrogen	28	0	0.0	20.706	25.740	39.235	29.795
Methane	16	1	1010.0	69.715	66.693	47.720	59.048
Ethane	30	2	1769.6	2.998	0.367	0.391	1.640
Propane	44	3	2518.7	0.398	0.207	0.030	0.214
iso-Butane	58.1	4	3257.5	0.165	0.088	0.019	0.092
Butane	58.1	4	3265.3	0.067	0.140	0.029	0.052
Isopentane	72.2	5	4000.9	0.106	0.174	0.041	0.078
n-pentane	72.2	5	4008.7	0.016	0.128	0.029	0.027
Cyclopentane	70	5	3763.7	0.002	0.000	0.000	0.001
n-hexane	86.2	6	4756.0	0.013	0.043	0.030	0.022
Cyclohexane	84	6	4481.7	0.003	0.000	0.002	0.002
Hexanes	86	6	4755.9	0.052	0.378	0.063	0.071
Heptanes	100.2	7	5501.0	0.040	0.339	0.061	0.063
Methylcyclohexane	98	7	5215.9	0.004	0.000	0.005	0.004
2,2,4 Trimethlypentane	114.2	8	6231.6	0.000	0.000	0.000	0.000
Benzene	78.1	6	3741.9	0.001	0.005	0.000	0.001
Toluene	92.1	7	4474.9	0.001	0.014	0.000	0.001
Ethylbenzene	106.2	8	5222.0	0.000	0.006	0.000	0.000
Xylene	106.2	8	5207.7	0.001	0.069	0.001	0.004
Octanes +	114.2	8	6248.9	0.036	0.235	0.053	0.052
Oxygen	32	0	0	0.988	0.000	1.859	1.365
Water	18	0	0.0	0.000	0.000	0.000	0.000
		Total :		100.0	100.0	100.0	100.0
Flare Efficiency	Feed Rate		scf/hr	364.58	31.50	364.58	760.67
95%	Average MW		lb/lbmole	20.73	21.75	24.09	22.39
Average Carbons/mole	Heat Content		Btu/scf	789.91	770.05	506.80	653.39
0.66	Energy Rate		MMBtu/hr	0.29	0.02	0.18	**0.50**

Table 15: Flare Emissions 2015

2015 Average Treater Gas Flow Rate	756	scf/day
	31.5	scf/hr
Recycle Vapor Flare Supply Rate	6.39	MMscf
	729.1666667	scf/hr

Combustion Emissions

Species	**lb/MMBTU** *lb/MMscf*	lb/hr	tpy
NO_X[1]	**0.068**	0.034	0.148
FORM[2]	*0.075*	0.000	0.000
CO[1]	**0.37**	0.18	0.81

[1]-CO and NO_X emission factors from AP-42 Tables 13.5-1 and 13.5-2

[2]-HCOH emission factor from AP-42 Table 1.4-3

GHG Emissions

Non Combusted emissions	lb/hr	tpy
CO_2	6.24	27.35
CH_4	0.95	4.15
Combusted Emissions	**lb/hr**	**tpy**
CO_2	55.01	240.96
N_2O[3]	0.00011	0.00

[3]-N_2O EF based on GHG Reporting Rule equation W-40

Total GHG	lb/hr	tpy
CO_2	61.26	268.31
CH_4	0.95	4.15
SO_2	0.29	1.29
N_2O	0.00	0.00
CO_2e	81.20	355.66

Species	lb/hr	tpy
VOCs	0.047	0.206
Benzene	0.000	0.000
Toluene	0.000	0.001
Ethylbenzene	0.000	0.000
2,2,4-trimethylpentane	0.000	0.000
Xylene	0.000	0.002
n-hexane	0.002	0.009
H_2S	0.008	0.036
HAPs	0.003	0.011

2.2.2 Run Tank Emissions 2015

Emission calculations assume all oil flash emissions originate from the run tank. All other oil tanks generate only working and breathing losses. Table 16 summarizes the run tank estimated emissions from the 2015 ProMax emission simulation.

Table 16: Run Tank Emissions 2015

2015 Oil Tank Emissions		
Oil throughput	1,713	bbl/day
Tank dimensions	12X20	feet
Average Liquid Height	15.00	feet

Emissions from Promax Simulation
Marathon - Circle Ridge #2 Treater Pressurized Crude Oil (11/4/2011)
Circle Ridge Treater Gas Analysis (2/21/2010)

Emissions (tpy)			
Component	Working Breathing	Flash	Total
Hydrogen Sulfide	0.197	1.164	1.361
Oxygen	0.000	0.000	0.000
Carbon Dioxide	0.036	0.218	0.254
Nitrogen	0.133	10.010	10.143
Methane	1.651	27.600	29.251
Ethane	0.103	0.399	0.502
Propane	0.160	0.765	0.925
Isobutane	0.051	0.265	0.316
Butane	0.098	0.528	0.626
Isopentane	0.035	0.181	0.216
Pentane	0.053	0.278	0.331
2-Methylpentane	0.016	0.086	0.102
3-Methylpentane	0.006	0.032	0.038
n-Hexane	0.023	0.125	0.148
Heptane	0.049	0.290	0.339
Octane	0.046	0.286	0.332
Nonane	0.008	0.052	0.060
Decane	0.056	0.363	0.419
Benzene	0.002	0.013	0.014
Toluene	0.001	0.010	0.011
Ethylbenzene	0.000	0.001	0.002
ortho-Xylene	0.000	0.004	0.004
2,2,4-Trimethylpentane	0.002	0.009	0.011
Water	0.000	0.899	0.900
Total:	2.725	43.578	46.303
VOC Emissions	0.605	3.288	3.893
Hap Emissions	0.028	0.162	0.190

2.2.3 Overflow Tank Emissions 2015

Overflow tank emissions assume the entire amount of oil produced at the facility is routed through the tank. Estimated working and breathing losses from the tank are located in Table 17 below.

Table 17: Overflow Tank Emissions 2015

2015 Oil Tank Emissions		
Oil throughput	1,713	bbl/day
Tank dimensions	21.5X16	feet
Average Liquid Height	5.00	feet

Emissions from Promax Simulation
Marathon - Circle Ridge #2 Treater Pressurized Crude Oil (11/4/2011)
Circle Ridge Treater Gas Analysis (2/21/2010)

Emissions (tpy)			
Component	Working Breathing	Flash	Total
Hydrogen Sulfide	0.238	0.000	0.238
Oxygen	0.000	0.000	0.000
Carbon Dioxide	0.043	0.000	0.043
Nitrogen	0.160	0.000	0.160
Methane	1.969	0.000	1.969
Ethane	0.124	0.000	0.124
Propane	0.194	0.000	0.194
Isobutane	0.062	0.000	0.062
Butane	0.119	0.000	0.119
Isopentane	0.042	0.000	0.042
Pentane	0.064	0.000	0.064
2-Methylpentane	0.019	0.000	0.019
3-Methylpentane	0.007	0.000	0.007
n-Hexane	0.028	0.000	0.028
Heptane	0.059	0.000	0.059
Octane	0.057	0.000	0.057
Nonane	0.010	0.000	0.010
Decane	0.068	0.000	0.068
Benzene	0.002	0.000	0.002
Toluene	0.001	0.000	0.001
Ethylbenzene	0.000	0.000	0.000
ortho-Xylene	0.001	0.000	0.001
2,2,4-Trimethylpentane	0.002	0.000	0.002
Water	0.000	0.000	0.000
Total:	3.270	0.000	3.270
VOC Emissions	0.736	0.000	0.736
Hap Emissions	0.034	0.000	0.034

2.2.4 Produced Water Skim Tank Emissions 2015

Flash emissions are all attributed to a single tank (the 10,000 bbl tank) and calculations assume the tanks operate in series. It is estimated that 5% of the time (VRU downtime) vapors from the 10,000 bbl water tank are released to the atmosphere. Estimated vapors from the produced water tanks are presenting in Table 18 while total emissions from the tanks factoring the use of the VRU are presented in Table 19.

Table 18: Produced Water Tank Emissions 2015

2015 Water Tank Emissions					
Tank 5			**Tank 6**		
Water throughput	156,384	bbl/day	Water throughput	156,384	bbl/day
Tank dimensions	38.5X24	feet	Tank dimensions	55X24	feet
Tank Volume	5,000	barrels	Tank Volume	10,000	barrels
Average Liquid Height	10.00	feet	Average Liquid Height	10.00	feet

Emissions from Promax Simulation
Marathon - Circle Ridge #2 Treater Pressurized Crude Oil (11/4/2011)
Circle Ridge Treater Gas Analysis (2/21/2010)

Emissions (tpy)					
Component	Tank 5		Tank 6		Total
	Working Breathing	Flash	Working Breathing	Flash	
Hydrogen Sulfide	0.752	0.000	0.766	4.104	5.621
Oxygen	0.000	0.000	0.000	0.000	0.000
Carbon Dioxide	0.151	0.000	0.154	0.795	1.100
Nitrogen	0.128	0.000	0.141	44.130	44.399
Methane	0.798	0.000	0.860	97.070	98.727
Ethane	0.007	0.000	0.008	1.073	1.088
Propane	0.003	0.000	0.003	1.710	1.716
Isobutane	0.000	0.000	0.000	0.486	0.486
Butane	0.000	0.000	0.001	1.660	1.661
Isopentane	0.000	0.000	0.000	0.471	0.471
Pentane	0.000	0.000	0.000	0.903	0.903
2-Methylpentane	0.000	0.000	0.000	0.225	0.225
3-Methylpentane	0.000	0.000	0.000	0.125	0.125
n-Hexane	0.000	0.000	0.000	0.289	0.289
Heptane	0.000	0.000	0.000	0.353	0.353
Octane	0.000	0.000	0.000	0.659	0.659
Nonane	0.000	0.000	0.000	0.177	0.177
Decane	0.000	0.000	0.000	0.972	0.972
Benzene	0.000	0.000	0.000	0.055	0.056
Toluene	0.000	0.000	0.000	0.055	0.055
Ethylbenzene	0.000	0.000	0.000	0.007	0.007
ortho-Xylene	0.000	0.000	0.000	0.023	0.023
2,2,4-Trimethylpentane	0.000	0.000	0.000	0.006	0.006
Water	17.210	0.000	17.160	3.269	37.639
Total:	19.049	0.000	19.092	158.618	196.759
VOC Emissions	0.004	0.000	0.004	8.177	8.185
Hap Emissions	0.000	0.000	0.000	0.436	0.436

Table 19: Controlled Produced Water Tank Emissions 2015

Species	lb/hour	tpy
VOC	0.09	0.41
H2S	0.23	0.99
CO2	0.05	0.20
CH4	1.30	5.69
CO2e	27.35	119.77
Benzene	0.00	0.00
Toluene	0.00	0.00
Ethylbenzene	0.00	0.00
Xylene	0.00	0.00
n-Hexane	0.00	0.00
2,2,4-Trimethylpentane	0.00	0.00

2.3 2016 Emissions PTE

Emissions for each source projected for 2016 are summarized in Table 20 and Table 21 on the following page.

Table 20: Circle Ridge Field Potential to Emit 2016

Source ID	Description	Rating	NO_X		CO		VOC		SO_2		H_2S		CO_2e		Haps	
			lb/hr	tpy	lb/hr	tpy	lb/hr	tpy	lb/hr	tpy	lb/hr	tpy	lb/hr	tpy	lb/hr	tpy
H1	Treater 1	1 MMBtu/hr	0.20	0.86	0.16	0.72	0.01	0.05	0.00	0.00	--	--	234	1025	0.00	0.02
H2	Treater 2	1 MMBtu/hr	0.20	0.86	0.16	0.72	0.01	0.05	0.00	0.00	--	--	234	1025	0.00	0.02
H3	Water Heater	0.3 MMBtu/hr	0.03	0.13	0.02	0.11	0.00	0.01	0.00	0.00	--	--	35	154	0.00	0.00
H4	Steam Generator	0.5 MMBtu/hr	0.05	0.21	0.04	0.18	0.00	0.01	0.00	0.00	--	--	59	256	0.00	0.00
T1	Run Tank	400 bbl	--	--	--	--	0.54	2.35	--	--	0.19	0.85	88	386	0.03	0.12
T2	Overflow Tank	1000 bbl	--	--	--	--	0.12	0.51	--	--	0.04	0.17	7	30	0.01	0.02
T3	Reject Tank	1000 bbl	--	--	--	--	0.05	0.22	--	--	0.02	0.07	3	12	0.00	0.01
T4	Steamer Tank	500 bbl	--	--	--	--	0.03	0.13	--	--	0.01	0.04	2	7	0.00	0.01
T5&T6	PW Skimmer Tanks	5,000 and 10,000 bbl	--	--	--	--	0.09	0.40	--	--	0.22	0.98	28	121	0.00	0.01
T7	Concrete Tanks	160 bbl/week	--	--	--	--	0.61	2.65	--	--	0.01	0.04	0	2	0.04	0.16
F1	Flare		0.03	0.15	0.18	0.81	0.05	0.20	0.22	0.98	0.01	0.03	81	356	0.00	0.01
		Total:	**0.50**	**2.21**	**0.58**	**2.54**	**1.50**	**6.57**	**0.23**	**0.98**	**0.50**	**2.18**	**770**	**3372**	**0.08**	**0.37**

Table 21: Circle Ridge Field HAP Emissions 2016

Source ID	Description	Rating	Benzene		Toluene		Ethylbenzene		Xylenes		n-Hexane		2,2,4-TMP		HCOH		Haps	
			lb/hr	tpy	lb/hr	tpy	lb/hr	tpy	lb/hr	tpy	lb/hr	tpy	lb/hr	tpy	lb/hr	tpy	lb/hr	tpy
H1	Treater 1	1 MMBtu/hr	0.00	0.00	0.00	0.00	--	--	--	--	0.00	0.02	--	--	0.00	0.00	0.00	0.02
H2	Treater 2	1 MMBtu/hr	0.00	0.00	0.00	0.00	--	--	--	--	0.00	0.02	--	--	0.00	0.00	0.00	0.02
H3	Water Heater	0.3 MMBtu/hr	0.00	0.00	0.00	0.00	--	--	--	--	0.00	0.00	--	--	0.00	0.00	0.00	0.00
H4	Steam Generator	0.5 MMBtu/hr	0.00	0.00	0.00	0.00	--	--	--	--	0.00	0.00	--	--	0.00	0.00	0.00	0.00
T1	Run Tank	400 bbl	0.00	0.01	0.00	0.01	0.00	0.00	0.00	0.00	0.02	0.09	0.00	0.01	--	--	0.03	0.12
T2	Overflow Tank	1000 bbl	0.00	0.00	0.00	0.00	0.00	0.00	0.00	0.00	0.00	0.02	0.00	0.00	--	--	0.01	0.02
T3	Reject Tank	1000 bbl	0.00	0.00	0.00	0.00	0.00	0.00	0.00	0.00	0.00	0.01	0.00	0.00	--	--	0.00	0.01
T4	Steamer Tank	500 bbl	0.00	0.00	0.00	0.00	0.00	0.00	0.00	0.00	0.00	0.00	0.00	0.00	--	--	0.00	0.01
T5&T6	PW Skimmer Tanks	5,000 and 10,000 bbl	0.00	0.00	0.00	0.00	0.00	0.00	0.00	0.00	0.00	0.00	0.00	0.00	--	--	0.00	0.01
T7	Concrete Tanks	160 bbl/week	0.00	0.01	0.00	0.02	0.00	0.01	0.01	0.02	0.02	0.09	0.00	0.01	--	--	0.04	0.16
F1	Flare		0.00	0.00	0.00	0.00	0.00	0.00	0.00	0.00	0.00	0.01	0.00	0.00	0.00	0.00	0.00	0.01
		Total:	**0.00**	**0.02**	**0.01**	**0.03**	**0.00**	**0.01**	**0.01**	**0.03**	**0.06**	**0.26**	**0.00**	**0.02**	**0.00**	**0.00**	**0.08**	**0.37**

2.3.1 2016 Flare Emissions

Flare emissions are calculated assuming all gas from the treater is controlled by the facilities flare. It is also assumed that recycle gas from the gas injection system may have to be sent to the flare 5% of the time. The flare is estimated to have 95% combustion efficiency. Both the recycle gas and treater gas are combined in Table 22 to provide an average flare gas composition which is used to estimate emissions provided in Table 23.

Table 22: Flare Gas Composition and Volume 2016

Component	MW	Reactive carbons (Per Mole)	HHV Btu/scf	Recyle Vapors Tensleep	Treater Gas	Recycle Vapors phosphoria	Average composition
				Mole %			
Hydrogen Sulfide	34	0	637.1	0.212	1.138	0.070	0.179
Helium	8	0	0	0.021	0.000	0.040	0.029
Hydrogen	2	0	324.2	0.011	0.000	0.259	0.130
Carbon Dioxide	44	0	0.0	4.092	4.238	8.844	6.382
Nitrogen	28	0	0.0	23.123	25.740	40.692	31.670
Methane	16	1	1010.0	67.395	66.693	47.529	57.817
Ethane	30	2	1769.6	3.215	0.367	0.389	1.747
Propane	44	3	2518.7	0.383	0.207	0.027	0.205
iso-Butane	58.1	4	3257.5	0.159	0.088	0.017	0.088
Butane	58.1	4	3265.3	0.064	0.140	0.026	0.049
Isopentane	72.2	5	4000.9	0.102	0.174	0.037	0.073
n-pentane	72.2	5	4008.7	0.015	0.128	0.026	0.025
Cyclopentane	70	5	3763.7	0.002	0.000	0.000	0.001
n-hexane	86.2	6	4756.0	0.013	0.043	0.027	0.021
Cyclohexane	84	6	4481.7	0.003	0.000	0.002	0.002
Hexanes	86	6	4755.9	0.050	0.378	0.056	0.066
Heptanes	100.2	7	5501.0	0.038	0.339	0.055	0.058
Methylcyclohexane	98	7	5215.9	0.004	0.000	0.004	0.004
2,2,4 Trimethlypentane	114.2	8	6231.6	0.000	0.000	0.000	0.000
Benzene	78.1	6	3741.9	0.001	0.005	0.000	0.001
Toluene	92.1	7	4474.9	0.001	0.014	0.000	0.001
Ethylbenzene	106.2	8	5222.0	0.000	0.006	0.000	0.000
Xylene	106.2	8	5207.7	0.001	0.069	0.001	0.003
Octanes +	114.2	8	6248.9	0.035	0.235	0.047	0.048
Oxygen	32	0	0	1.059	0.000	1.852	1.400
Water	18	0	0.0	0.000	0.000	0.000	0.000
		Total :		100.0	100.0	100.0	100.0
Flare Efficiency	Feed Rate		scf/hr	375.00	30.00	375.00	780.00
95%	Average MW		lb/lbmole	20.96	21.75	23.90	22.40
Average Carbons/mole	Heat Content		Btu/scf	768.39	770.05	503.09	640.91
0.64	Energy Rate		MMBtu/hr	0.29	0.02	0.19	**0.50**

Table 23: Flare Emissions 2016

2016 Average Treater Gas Flow Rate	720	scf/day
	30	scf/hr
Recycle Vapor Flare Supply Rate	6.57	MMscf
	750	scf/hr

Combustion Emissions

Species	**lb/MMBTU** *lb/MMscf*	lb/hr	tpy
NO_X[1]	**0.068**	0.034	0.149
FORM[2]	*0.075*	0.000	0.000
CO[1]	**0.37**	0.18	0.81

[1]-CO and NO_X emission factors from AP-42 Tables 13.5-1 and 13.5-2

[2]-HCOH emission factor from AP-42 Table 1.4-3

GHG Emissions

Non Combusted emissions	lb/hr	tpy
CO_2	5.78	25.31
CH_4	0.95	4.17
Combusted Emissions	**lb/hr**	**tpy**
CO_2	55.37	242.51
N_2O[3]	0.00011	0.00

[3]-N_2O EF based on GHG Reporting Rule equation W-40

Total GHG	lb/hr	tpy
CO_2	61.15	267.83
CH_4	0.95	4.17
SO_2	0.22	0.98
N_2O	0.00	0.00
CO_2e	81.17	355.53

Species	lb/hr	tpy
VOCs	0.045	0.198
Benzene	0.000	0.000
Toluene	0.000	0.000
Ethylbenzene	0.000	0.000
2,2,4-trimethylpentane	0.000	0.000
Xylene	0.000	0.002
n-hexane	0.002	0.008
H_2S	0.006	0.027
HAPs	0.002	0.011

2.3.2 Run Tank Emissions 2016

Emission calculations assume all oil flash emissions originate from the run tank. All other oil tanks generate only working and breathing losses. Table 24 summarizes the run tank estimated emissions from the 2016 ProMax emission simulation.

Table 24: Run Tank Emissions 2016

2016 Oil Tank Emissions		
Oil throughput	1,045	bbl/day
Tank dimensions	12X20	feet
Average Liquid Height	15.00	feet

Emissions from Promax Simulation
Marathon - Circle Ridge #2 Treater Pressurized Crude Oil (11/4/2011)
Circle Ridge Treater Gas Analysis (2/21/2010)

Emissions (tpy)			
Component	Working Breathing	Flash	Total
Hydrogen Sulfide	0.129	0.717	0.846
Oxygen	0.000	0.000	0.000
Carbon Dioxide	0.021	0.121	0.142
Nitrogen	0.083	5.845	5.928
Methane	1.097	17.260	18.357
Ethane	0.057	0.210	0.267
Propane	0.095	0.428	0.523
Isobutane	0.033	0.161	0.194
Butane	0.062	0.315	0.376
Isopentane	0.023	0.112	0.135
Pentane	0.034	0.170	0.205
2-Methylpentane	0.011	0.054	0.064
3-Methylpentane	0.004	0.020	0.024
n-Hexane	0.015	0.077	0.092
Heptane	0.032	0.179	0.211
Octane	0.030	0.177	0.207
Nonane	0.005	0.032	0.038
Decane	0.037	0.224	0.261
Benzene	0.001	0.006	0.007
Toluene	0.001	0.006	0.006
Ethylbenzene	0.000	0.001	0.001
ortho-Xylene	0.000	0.002	0.003
2,2,4-Trimethylpentane	0.001	0.006	0.007
Water	0.000	0.555	0.555
Total:	1.771	26.676	28.447
VOC Emissions	0.384	1.969	2.353
Hap Emissions	0.018	0.098	0.116

2.3.3 Overflow Tank Emissions 2016

Overflow tank emissions assume the entire amount of oil produced at the facility is routed through the tank. Estimated working and breathing losses from the tank are located in Table 25 below.

Table 25: Overflow Tank Emissions 2016

2016 Oil Tank Emissions		
Oil throughput	1,045	bbl/day
Tank dimensions	21.5X16	feet
Average Liquid Height	5.00	feet

Emissions from Promax Simulation
Marathon - Circle Ridge #2 Treater Pressurized Crude Oil (11/4/2011)
Circle Ridge Treater Gas Analysis (2/21/2010)

Emissions (tpy)			
Component	Working Breathing	Flash	Total
Hydrogen Sulfide	0.171	0.000	0.171
Oxygen	0.000	0.000	0.000
Carbon Dioxide	0.028	0.000	0.028
Nitrogen	0.109	0.000	0.109
Methane	1.440	0.000	1.440
Ethane	0.076	0.000	0.076
Propane	0.126	0.000	0.126
Isobutane	0.044	0.000	0.044
Butane	0.083	0.000	0.083
Isopentane	0.031	0.000	0.031
Pentane	0.046	0.000	0.046
2-Methylpentane	0.014	0.000	0.014
3-Methylpentane	0.005	0.000	0.005
n-Hexane	0.020	0.000	0.020
Heptane	0.043	0.000	0.043
Octane	0.041	0.000	0.041
Nonane	0.007	0.000	0.007
Decane	0.049	0.000	0.049
Benzene	0.001	0.000	0.001
Toluene	0.001	0.000	0.001
Ethylbenzene	0.000	0.000	0.000
ortho-Xylene	0.000	0.000	0.000
2,2,4-Trimethylpentane	0.001	0.000	0.001
Water	0.000	0.000	0.000
Total:	2.335	0.000	2.335
VOC Emissions	0.512	0.000	0.512
Hap Emissions	0.024	0.000	0.024

2.3.4 Produced Water Skim Tank Emissions 2016

Flash emissions are all attributed to a single tank (the 10,000 bbl tank) and calculations assume the tanks operate in series. It is estimated that 5% of the time (VRU downtime) vapors from the 10,000 bbl water tank are released to the atmosphere. Estimated vapors from the produced water tanks are presenting in Table 26 while total emissions from the tanks factoring the use of the VRU are presented in Table 27.

Table 26: Produced Water Tank Emissions 2016

2016 Water Tank Emissions					
Tank 5			**Tank 6**		
Water throughput	154,199	bbl/day	Water throughput	154,199	bbl/day
Tank dimensions	38.5X24	feet	Tank dimensions	55X24	feet
Tank Volume	5,000	barrels	Tank Volume	10,000	barrels
Average Liquid Height	10.00	feet	Average Liquid Height	10.00	feet

Emissions from Promax Simulation
Marathon - Circle Ridge #2 Treater Pressurized Crude Oil (11/4/2011)
Circle Ridge Treater Gas Analysis (2/21/2010)

Emissions (tpy)					
Component	Tank 5		Tank 6		Total
	Working Breathing	Flash	Working Breathing	Flash	
Hydrogen Sulfide	0.741	0.000	0.754	4.083	5.578
Oxygen	0.000	0.000	0.000	0.000	0.000
Carbon Dioxide	0.134	0.000	0.136	0.713	0.984
Nitrogen	0.120	0.000	0.124	41.690	41.933
Methane	0.799	0.000	0.824	98.060	99.683
Ethane	0.006	0.000	0.006	0.908	0.920
Propane	0.003	0.000	0.003	1.538	1.543
Isobutane	0.000	0.000	0.000	0.475	0.475
Butane	0.000	0.000	0.000	1.588	1.589
Isopentane	0.000	0.000	0.000	0.468	0.468
Pentane	0.000	0.000	0.000	0.889	0.889
2-Methylpentane	0.000	0.000	0.000	0.225	0.225
3-Methylpentane	0.000	0.000	0.000	0.127	0.127
n-Hexane	0.000	0.000	0.000	0.285	0.285
Heptane	0.000	0.000	0.000	0.349	0.349
Octane	0.000	0.000	0.000	0.652	0.652
Nonane	0.000	0.000	0.000	0.175	0.175
Decane	0.000	0.000	0.000	0.961	0.961
Benzene	0.000	0.000	0.000	0.044	0.044
Toluene	0.000	0.000	0.000	0.050	0.050
Ethylbenzene	0.000	0.000	0.000	0.007	0.007
ortho-Xylene	0.000	0.000	0.000	0.022	0.022
2,2,4-Trimethylpentane	0.000	0.000	0.000	0.006	0.006
Water	16.970	0.000	16.940	3.253	37.163
Total:	18.773	0.000	18.788	156.569	194.130
VOC Emissions	0.003	0.000	0.003	7.862	7.868
Hap Emissions	0.000	0.000	0.000	0.415	0.415

Table 27: Controlled Produced Water Tank Emissions 2016

Species	lb/hour	tpy
VOC	0.09	0.40
H_2S	0.22	0.98
CO_2	0.04	0.18
CH_4	1.31	5.74
CO_2e	27.57	120.78
Benzene	0.00	0.00
Toluene	0.00	0.00
Ethylbenzene	0.00	0.00
Xylene	0.00	0.00
n-Hexane	0.00	0.00
2,2,4-Trimethylpentane	0.00	0.00

3.0 CONSTANT EMISSIONS SOURCES

The concrete, reject, and steamer tanks have constant estimated throughputs and were therefore assumed to have consistent emissions year to year. Emissions from heating equipment located at the facility are also anticipated to have constant annual emissions.

3.1 Heating Equipment

Heating equipment at the facility burns pipeline quality natural gas warranting the use of AP-42 emission factors to estimate anticipated emissions.

3.1.1 Heater Treaters

Estimated emissions for each of the 1MMBtu/hr heater treaters are presented in Table 28.

Table 28: Heater Treaters 1&2

Basis		
Heat usage	1	MMBtu/hr
Number of units	2	units
Operating Hours	8760	hr/year
Fuel Gas heat Value	1050	Btu/scf

Species	Emission Factors		Emissions	
	lb/MMscf	lb/MMBtu	lb/hr	tpy
NO_X	100	0.098	0.196	0.859
CO	84	0.082	0.165	0.721
VOC	5.5	0.005	0.011	0.047
Formaldehyde	0.075	0.000	0.000	0.001
SO_2	0.60	0.001	0.001	0.000
PM-total	7.6	0.007	0.015	0.065
PM10	5.7	0.006	0.011	0.049
PM2.5	1.9	0.002	0.004	0.016
n-Hexane	1.8	0.002	0.004	0.015
Benzene	0.0021	0.000	0.000	0.000
Toluene	0.0034	0.000	0.000	0.000

Emission factors AP-42 table 1.4-2 and table 1.4-3

Greenhouse Gas Emission Estimates

Species	EF	EF	Emissions	
	kg/MMBtu	lb/MMBtu	lb/hr	tpy
CO_2	53.02	116.9	233.8	1023.9
CH_4	0.001	0.0022	0.0044	0.019
N_2O	0.0001	0.00022	0.00044	0.0019
CO_2e	--	--	234.0	1,024.9

Emission Factors from 40 CFR Part 98 Subpart C tables C-1 and C-2

3.1.2 Water Heater

Emissions for the 0.3 MMBtu/hr water heater are presented in Table 29.

Table 29: Water Heater Emissions

Basis				
Heat usage			0.3	MMBtu/hr
Number of units			1	units
Operating Hours			8760	hr/year
Fuel Gas heat Value			1050	Btu/scf
Species	**Emission Factors**		**Emissions**	
	lb/MMscf	lb/MMBtu	lb/hr	tpy
NO_X	100	0.098	0.029	0.129
CO	84	0.082	0.025	0.108
VOC	5.5	0.005	0.002	0.007
Formaldehyde	0.075	0.000	0.000	0.000
SO_2	0.60	0.001	0.000	0.000
PM-total	7.6	0.007	0.002	0.010
PM11	5.7	0.006	0.002	0.007
PM2.6	1.9	0.002	0.001	0.002
n-Hexane	1.8	0.002	0.001	0.002
Benzene	0.0021	0.000	0.000	0.000
Toluene	0.0034	0.000	0.000	0.000

Emission factors AP-42 table 1.4-2 and table 1.4-3

Greenhouse Gas Emission Estimates

Species	EF	EF	Emissions	
	kg/MMBtu	lb/MMBtu	lb/hr	tpy
CO_2	53.02	116.9	35.1	153.6
CH_4	0.001	0.0022	0.0007	0.003
N_2O	0.0001	0.00022	0.00007	0.0003
CO_2e	--	--	35.1	153.7

Emission Factors from 40 CFR Part 98 Subpart C tables C-1 and C-2

3.1.3 Steam Generator

Emissions for the 0.5 MMBtu/hr steam generator are presented in Table 29 on the following page.

Table 30: Steam Generator Emissions

Basis				
Heat usage			0.5	MMBtu/hr
Number of units			1	units
Operating Hours			8760	hr/year
Fuel Gas heat Value			1050	Btu/scf
Species	**Emission Factors**		**Emissions**	
	lb/MMscf	lb/MMBtu	lb/hr	tpy
NO_X	100	0.098	0.049	0.215
CO	84	0.082	0.041	0.180
VOC	5.5	0.005	0.003	0.012
Formaldehyde	0.075	0.000	0.000	0.000
SO_2	0.60	0.001	0.000	0.000
PM-total	7.6	0.007	0.004	0.016
PM11	5.7	0.006	0.003	0.012
PM2.6	1.9	0.002	0.001	0.004
n-Hexane	1.8	0.002	0.001	0.004
Benzene	0.0021	0.000	0.000	0.000
Toluene	0.0034	0.000	0.000	0.000

Emission factors AP-42 table 1.4-2 and table 1.4-3

Greenhouse Gas Emission Estimates

Species	EF	EF	Emissions	
	kg/MMBtu	lb/MMBtu	lb/hr	tpy
CO_2	53.02	116.9	58.4	256.0
CH_4	0.001	0.0022	0.0011	0.005
N_2O	0.0001	0.00022	0.00011	0.0005
CO_2e	--	--	58.5	256.2

Emission Factors from 40 CFR Part 98 Subpart C tables C-1 and C-2

3.2 Tank Emissions

Each of the tanks in the following section has a set anticipated throughput and emissions were calculated only once for each source.

3.2.1 Concrete Tank Emissions

A combined flow rate of 160 bbl/wk was used to calculate emissions from the two open concrete atmospheric tanks. The fluid inside each of the tanks was estimated to be 98.8 mole % produced water with the remaining fraction comprising of oil. EPA's Water9 program was used to estimate emissions from these tanks. A summary of the estimated emissions is presented in Table 31.

Table 31: Concrete Tank Emissions

Species	lb/hr	tpy
VOCs	0.605	2.652
n-Hexane	0.021	0.093
Benzene	0.002	0.008
Toluene	0.004	0.017
Ethylbenzene	0.002	0.007
Xylene	0.006	0.025
SO_2	0.000	0.000
CO_2	0.012	0.051
CH_4	0.017	0.076
CO_2e	0.377	1.650
H_2S	0.009	0.039
HAPs	0.037	0.160
2,2,4-trimethylpentane	0.002	0.009

Emissions based on simulation using EPA program Water9 for wastewater emissions

3.2.2 Steamer Tank Emissions

Emissions from the steamer tank are estimated based on an approximate daily throughput of 90 barrels. The estimated emissions from this source can be observed in Table 32.

Table 32: Steamer Tank Emissions

Steamer Tank Emissions		
Oil throughput	90	bbl/day
Tank dimensions	15X16	feet
Average Liquid Height	8.00	feet

Emissions from Promax Simulation
Marathon - Circle Ridge #2 Treater Pressurized Crude Oil (11/4/2011)
Circle Ridge Treater Gas Analysis (2/21/2010)

Emissions (tpy)			
Component	Working Breathing	Flash	Total
Hydrogen Sulfide	0.041	0.000	0.041
Oxygen	0.000	0.000	0.000
Carbon Dioxide	0.009	0.000	0.009
Nitrogen	0.029	0.000	0.029
Methane	0.331	0.000	0.331
Ethane	0.024	0.000	0.024
Propane	0.035	0.000	0.035
Isobutane	0.011	0.000	0.011
Butane	0.021	0.000	0.021
Isopentane	0.007	0.000	0.007
Pentane	0.011	0.000	0.011
2-Methylpentane	0.003	0.000	0.003
3-Methylpentane	0.001	0.000	0.001
n-Hexane	0.005	0.000	0.005
Heptane	0.010	0.000	0.010
Octane	0.010	0.000	0.010
Nonane	0.002	0.000	0.002
Decane	0.012	0.000	0.012
Benzene	0.000	0.000	0.000
Toluene	0.000	0.000	0.000
Ethylbenzene	0.000	0.000	0.000
ortho-Xylene	0.000	0.000	0.000
2,2,4-Trimethylpentane	0.000	0.000	0.000
Water	0.000	0.000	0.000
Total:	0.563	0.000	0.563
VOC Emissions	0.129	0.000	0.129
Hap Emissions	0.006	0.000	0.006

3.2.3 Reject Tank Estimated Emissions

Emissions from the reject tank are estimated based on an approximate daily throughput of 80 barrels. The estimated emissions from this source can be observed in Table 32

Table 33: Reject Tank Estimated Emissions

Reject Tank Emissions		
Oil throughput	80	bbl/day
Tank dimensions	21.5X16	feet
Average Liquid Height	8.00	feet

Emissions from Promax Simulation
Marathon - Circle Ridge #2 Treater Pressurized Crude Oil (11/4/2011)
Circle Ridge Treater Gas Analysis (2/21/2010)

Emissions (tpy)			
Component	Working Breathing	Flash	Total
Hydrogen Sulfide	0.068	0.000	0.068
Oxygen	0.000	0.000	0.000
Carbon Dioxide	0.014	0.000	0.014
Nitrogen	0.049	0.000	0.049
Methane	0.553	0.000	0.553
Ethane	0.040	0.000	0.040
Propane	0.059	0.000	0.059
Isobutane	0.018	0.000	0.018
Butane	0.035	0.000	0.035
Isopentane	0.012	0.000	0.012
Pentane	0.018	0.000	0.018
2-Methylpentane	0.006	0.000	0.006
3-Methylpentane	0.002	0.000	0.002
n-Hexane	0.008	0.000	0.008
Heptane	0.017	0.000	0.017
Octane	0.016	0.000	0.016
Nonane	0.003	0.000	0.003
Decane	0.020	0.000	0.020
Benzene	0.001	0.000	0.001
Toluene	0.000	0.000	0.000
Ethylbenzene	0.000	0.000	0.000
ortho-Xylene	0.000	0.000	0.000
2,2,4-Trimethylpentane	0.001	0.000	0.001
Water	0.000	0.000	0.000
Total:	0.941	0.000	0.941
VOC Emissions	0.215	0.000	0.215
Hap Emissions	0.010	0.000	0.010

Attachment A
Gas Analysis

PRECISION ANALYSIS

423 ELIZABETH DR, RIVERTON, WY 82501
PHONE: 307-856-0866, CELL: 307-851-7046
E-MAIL: INFO@PRECISION-LABS.COM
WWW.PRECISION-LABS.COM

Run File	C:\Galaxie Workstation\data\11_02_10\CR TOTAL GAS PHOENIX4_2.DATA		
Method	S2_C6+		
Operator	User1	Analysis Date	2/10/2011
Client:	MARATHON	Date Sampled:	2/10/2011
Sample Identification:	CR TOTAL GAS PHOENIX	Purpose:	QUARTERLY
Unique #:		Pressure:	71 PSIA
Sample Temperature:	35 DEG F	Type Sample:	ON-SITE
Sampled by:	ANDY FONTAINE	County:	FREMONT

Component	Mole %	BTU	GPM
Nitrogen (N2)	0.9544	0.0000	0.0000
Carbon Dioxide	1.8231	0.0000	0.0000
Methane (CH4)	92.5399	936.8157	0.0000
Ethane (C2)	2.4008	42.5852	0.6419
Propane (C3)	1.1407	28.7682	0.3142
iso-Butane (i-C4)	0.4834	15.7552	0.1581
Butane (C4)	0.1675	5.4763	0.0528
iso-Pentane (i-C5)	0.2441	9.7901	0.0893
Pentane (C5)	0.0165	0.6647	0.0060
Hexanes (C6)	0.2295	10.9410	0.0944
Totals	100.0000	1050.7963	1.3566

Specific Gravity from Composition			0.6194				
BTUs @	14.730	Saturated	1032.5083	BTUs @	14.730	Saturated (Real)	1034.9750
BTUs @	14.730	Dry	1050.7963	BTUs @	14.730	Dry (Real)	1053.3067
Compressibility			0.99762				

Brinkenhoff

2-10-11

2/10/2011

PRECISION ANALYSIS

423 ELIZABETH DR, RIVERTON, WY 82501
PHONE: 307-856-0566, CELL: 307-851-7046
E-MAIL: INFO@PRECISION-LABS.COM
WWW.PRECISION-LABS.COM

Run File	C:\Galaxie Workstation\data\10_10_21\CR TREATER GAS3_2.DATA		
Method	S2_C9,H2S(high)		
Operator	User1	Analysis Date	10/21/2010
Client:	MARATHON	Date Sampled:	10/21/2010
Sample Identification:	CR TREATER GAS	Purpose:	
Unique #:		Pressure:	19 PSI
Sample Temperature:	74 DEG F	Type Sample:	ON-SITE
Sampled by:	ANDY FONTAINE	County:	FREMONT

Component	Mole %	BTU	GPM
Hydrogen Sulfide	1.1380	7.2672	0.0000
Nitrogen (N2)	25.7400	0.0000	0.0000
Carbon Dioxide	4.2375	0.0000	0.0000
Methane (CH4)	66.6934	675.1617	0.0000
Ethane (C2)	0.3673	6.5150	0.0982
Propane (C3)	0.2067	5.2134	0.0569
iso-Butane (i-C4)	0.0882	2.8750	0.0289
Butane (C4)	0.1399	4.5734	0.0441
iso-Pentane (i-C5)	0.1738	6.9704	0.0636
Pentane (C5)	0.1284	5.1572	0.0465
Hexanes (C6)	0.4254	20.2803	0.1749
Heptanes (C7)	0.3521	19.4213	0.1624
Octanes (C8)	0.2235	13.9980	0.1145
Nonanes (C9)	0.0858	6.0171	0.0483
Totals	100.0000	773.4498	0.8382

Specific Gravity from Composition			0.7538				
BTUs @	14.730	Saturated	759.9888	BTUs @	14.730	Saturated (Real)	761.4584
BTUs @	14.730	Dry	773.4498	BTUs @	14.730	Dry (Real)	774.9455
Compressibility			0.99807				

Circle Ridge

10/21/2010

Attachment B
Oil Analysis

AMERICAN MOBILE RESEARCH, INC.

P.O. BOX 2909
CASPER, WYOMING 82602

(307) 235-4590 PHONE
(307) 265-4489 FAX

EXTENDED HYDROCARBON (GLYCALC) LIQUID STUDY
CERTIFICATE OF ANALYSIS

Company ..... **Marathon**
Lab Number CR-11584
Date Sampled 10-13-2011

Study Number CR-8
Date Tested 11-4-2011

Sample Identification ..... **MARATHON - CIRCLE RIDGE #2 TREATER PRESSURIZED CRUDE OIL**

Sample Location ..... WYOMING.
Sample Pressure ..... 16 PSIG
Type Sample ..... SPOT
Test Method ..... GPA 2186

Sample Temperature ..... 121 F
County ..... FREMONT
Sampling Method GPA-2174

Components	Mole %	Weight %	Liq. Vol. %
Hydrogen Sulfide	0.000	0.000	0.000
Oxygen	0.000	0.000	0.000
Carbon Dioxide	0.006	0.001	0.001
Nitrogen	0.001	0.000	0.000
Methane	0.045	0.003	0.009
Ethane	0.029	0.004	0.009
Propane	0.108	0.021	0.035
iso-Butane	0.062	0.016	0.024
n-Butane	0.183	0.047	0.067
iso-Pentane	0.137	0.044	0.058
n-Pentane	0.290	0.092	0.122
Hexanes	0.256	0.098	0.122
Heptanes	2.493	1.104	1.336
Octanes	7.361	3.717	4.379
Nonanes	3.940	2.234	2.575
Decanes+	84.218	92.259	90.868
Benzene.....	0.073	0.025	0.024
Toluene.....	0.124	0.051	0.048
Ethylbenzene.....	0.052	0.024	0.023
Xylenes.....	0.176	0.083	0.079
n-Hexane	0.382	0.146	0.182
2,2,4-Trimethylpentane..	0.064	0.032	0.039
Totals.....	100.000	100.000	100.000

ADDITIONAL BETX DATA

Components	Mole %	Weight %	Liq. Vol. %
2-Methylpentane	0.183	0.070	0.087
3-Methylpentane	0.073	0.028	0.035
n-Hexane	0.382	0.146	0.182
2,2,4-Trimethylpentane	0.064	0.032	0.039
Benzene	0.073	0.025	0.024
Toluene	0.124	0.051	0.048
Ethylbenzene	0.052	0.024	0.023
m-Xylene	0.020	0.009	0.009
p-Xylene	0.126	0.059	0.057
o-Xylene	0.030	0.014	0.013

API GRAVITY AT 60/60 F, calculated	38.5
SPECIFIC GRAVITY AT 60/60 F, calculated	0.83249
RELATIVE SPECIFIC GRAVITY OF DECANES+ (C10+) FRACTION, calculated	0.84523
AVERAGE MOLECULAR WEIGHT	226.231
AVERAGE MOLECULAR WEIGHT OF DECANES+ (C10+) FRACTION, calculated	247.831
TRUE VAPOR PRESSURE AT 100 F, PSIA, calculated	3.074
AVERAGE BOILING POINT, F, calculated	491.721
CUBIC FEET OF GAS / GALLON OF LIQUID, as Ideal Gas, calculated	16.680
BTU / GALLON OF LIQUID AT 14.73 PSIA, calculated	126,342.42
LBS / GALLON OF LIQUID, calculated	6.941

NOTATION: ALL CALCULATIONS PERFORMED USING PHYSICAL CONSTANTS FROM GPA 2145-09, THE TABLES OF PHYSICAL CONSTANTS FOR HYDROCARBONS AND OTHER COMPOUNDS OF INTEREST TO THE NATURAL GAS INDUSTRY.

James A. Kane, President
American Mobile Research, Inc.

Attachment C
ProMax Flowsheets

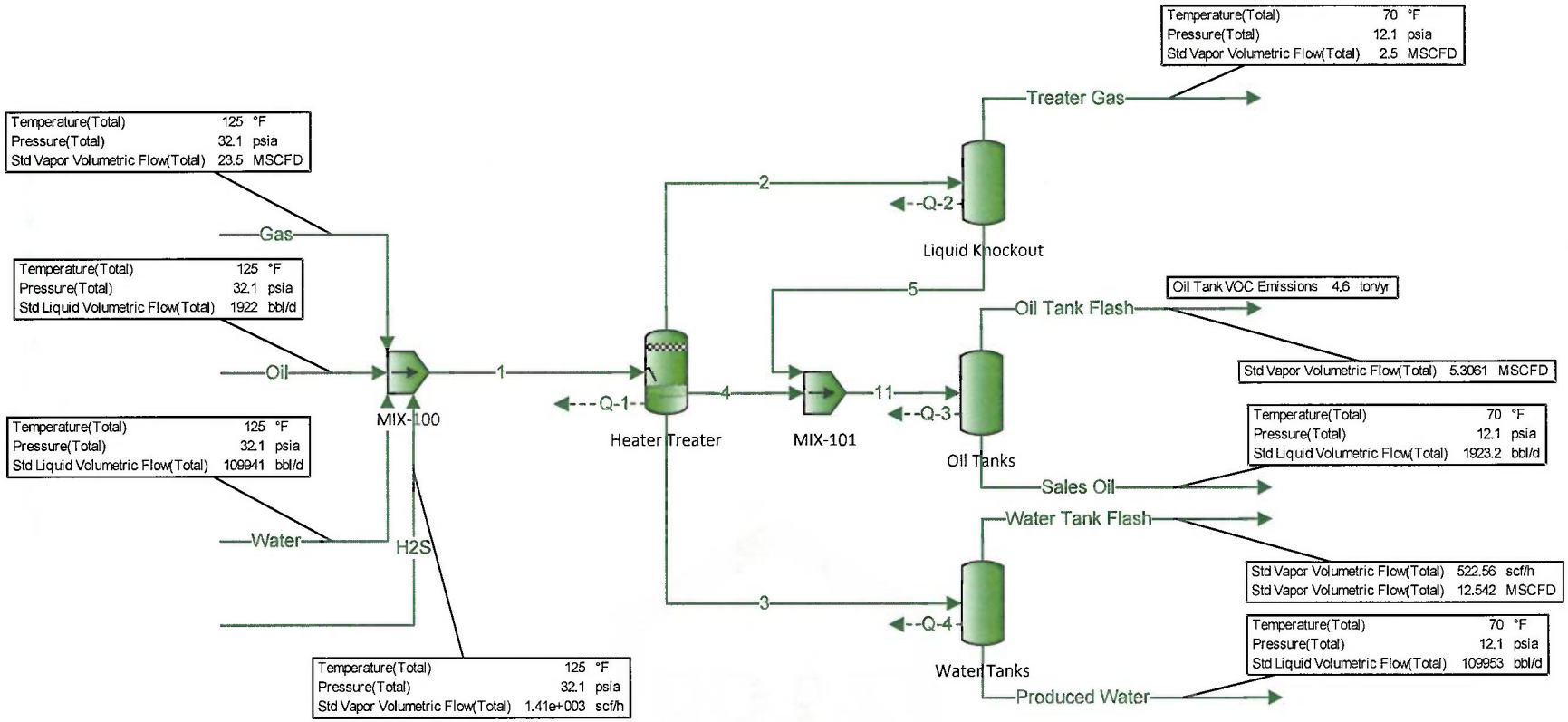

2014 Tank Emissions

Emissions Displayed below are total emissions including inert species such as water

Tanks are assumed to operate in series as such only one tank of oil and one of water are assumed to flash

Run Tank

Tank loss calculations for "11".
Total working and breathing losses from the Vertical Cylinder are 3.037 ton/yr.
Flashing losses are 48.63 ton/yr.

Overflow Tank

Tank loss calculations for "Sales Oil".
Total working and breathing losses from the Vertical Cylinder are 3.582 ton/yr.

Steamer Tank

Tank loss calculations for "Sales Oil".
Total working and breathing losses from the Vertical Cylinder are 0.5626 ton/yr.

Reject Tank

Tank loss calculations for "Sales Oil".
Total working and breathing losses from the Vertical Cylinder are 0.9409 ton/yr.

Water Skim Tank 10,000 bbl

Tank loss calculations for "3".
Total working and breathing losses from the Vertical Cylinder are 13.76 ton/yr.
Flashing losses are 111.3 ton/yr.

Water Skim Tank 5,000 bbl

Tank loss calculations for "Produced Water".
Total working and breathing losses from the Vertical Cylinder are 13.56 ton/yr.

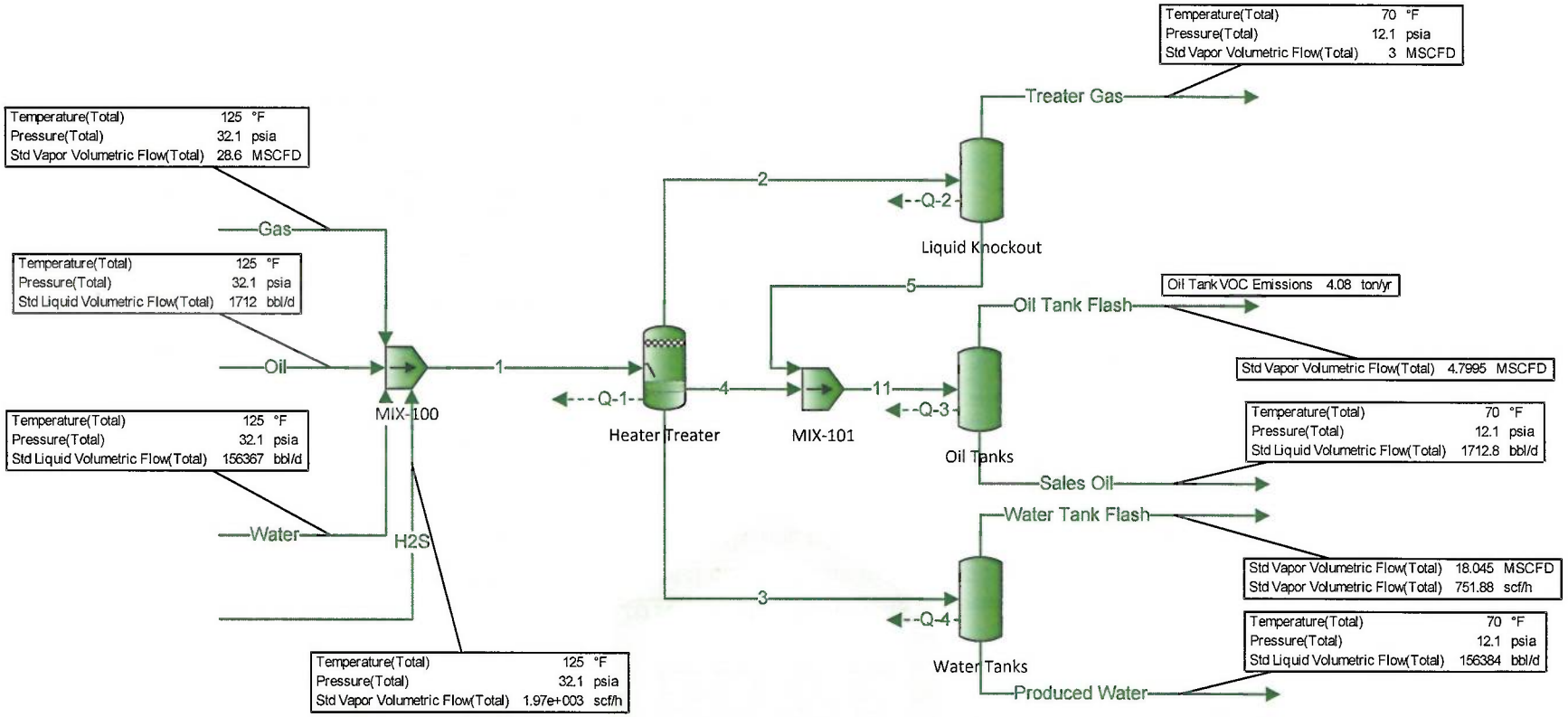

2015 Tank Emissions

Emissions Displayed below are total emissions including inert species such as water

Tanks are assumed to operate in series as such only one tank of oil and one of water are assumed to flash

Run Tank

Tank loss calculations for "11".
Total working and breathing losses from the Vertical Cylinder are 2.725 ton/yr.
Flashing losses are 43.58 ton/yr.

Overflow Tank

Tank loss calculations for "Sales Oil".
Total working and breathing losses from the Vertical Cylinder are 3.27 ton/yr.

Steamer Tank

Tank loss calculations for "Sales Oil".
Total working and breathing losses from the Vertical Cylinder are 0.5581 ton/yr.

Reject Tank

Tank loss calculations for "Sales Oil".
Total working and breathing losses from the Vertical Cylinder are 0.9328 ton/yr.

Water Skim Tank 10,000 bbl

Tank loss calculations for "3".
Total working and breathing losses from the Vertical Cylinder are 19.09 ton/yr.
Flashing losses are 158.6 ton/yr.

Water Skim Tank 5,000 bbl

Tank loss calculations for "Produced Water".
Total working and breathing losses from the Vertical Cylinder are 19.05 ton/yr.

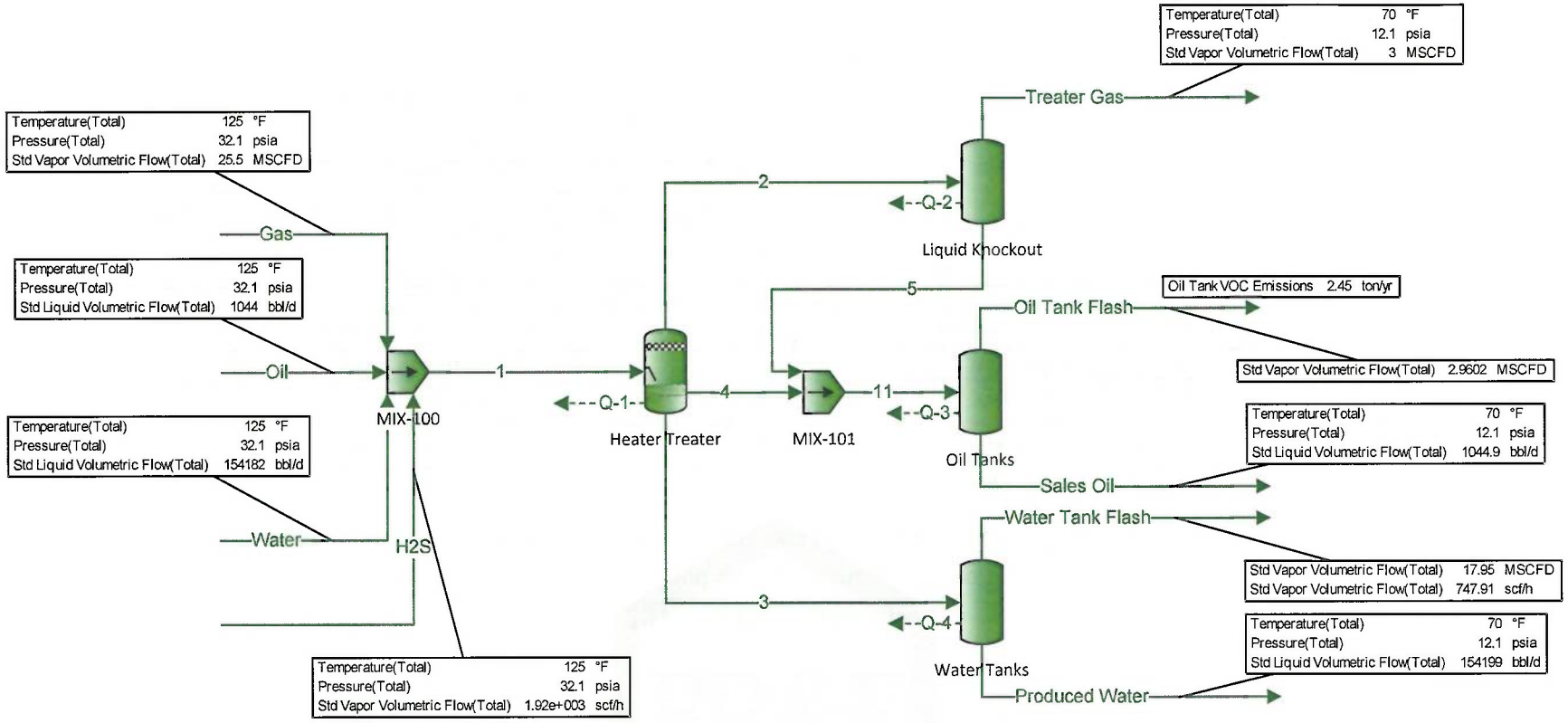

2016 Tank Emissions

Emissions Displayed below are total emissions including inert species such as water

Tanks are assumed to operate in series as such only one tank of oil and one of water are assumed to flash

Run Tank

Tank loss calculations for "11".
Total working and breathing losses from the Vertical Cylinder are 1.761 ton/yr.
Flashing losses are 26.68 ton/yr.

Overflow Tank

Tank loss calculations for "Sales Oil".
Total working and breathing losses from the Vertical Cylinder are 2.33 ton/yr.

Steamer Tank

Tank loss calculations for "Sales Oil".
Total working and breathing losses from the Vertical Cylinder are 0.5522 ton/yr.

Reject Tank

Tank loss calculations for "Sales Oil".
Total working and breathing losses from the Vertical Cylinder are 0.9224 ton/yr.

Water Skim Tank 10,000 bbl

Tank loss calculations for "3".
Total working and breathing losses from the Vertical Cylinder are 18.83 ton/yr.
Flashing losses are 156.6 ton/yr.

Water Skim Tank 5,000 bbl

Tank loss calculations for "Produced Water".
Total working and breathing losses from the Vertical Cylinder are 18.78 ton/yr.