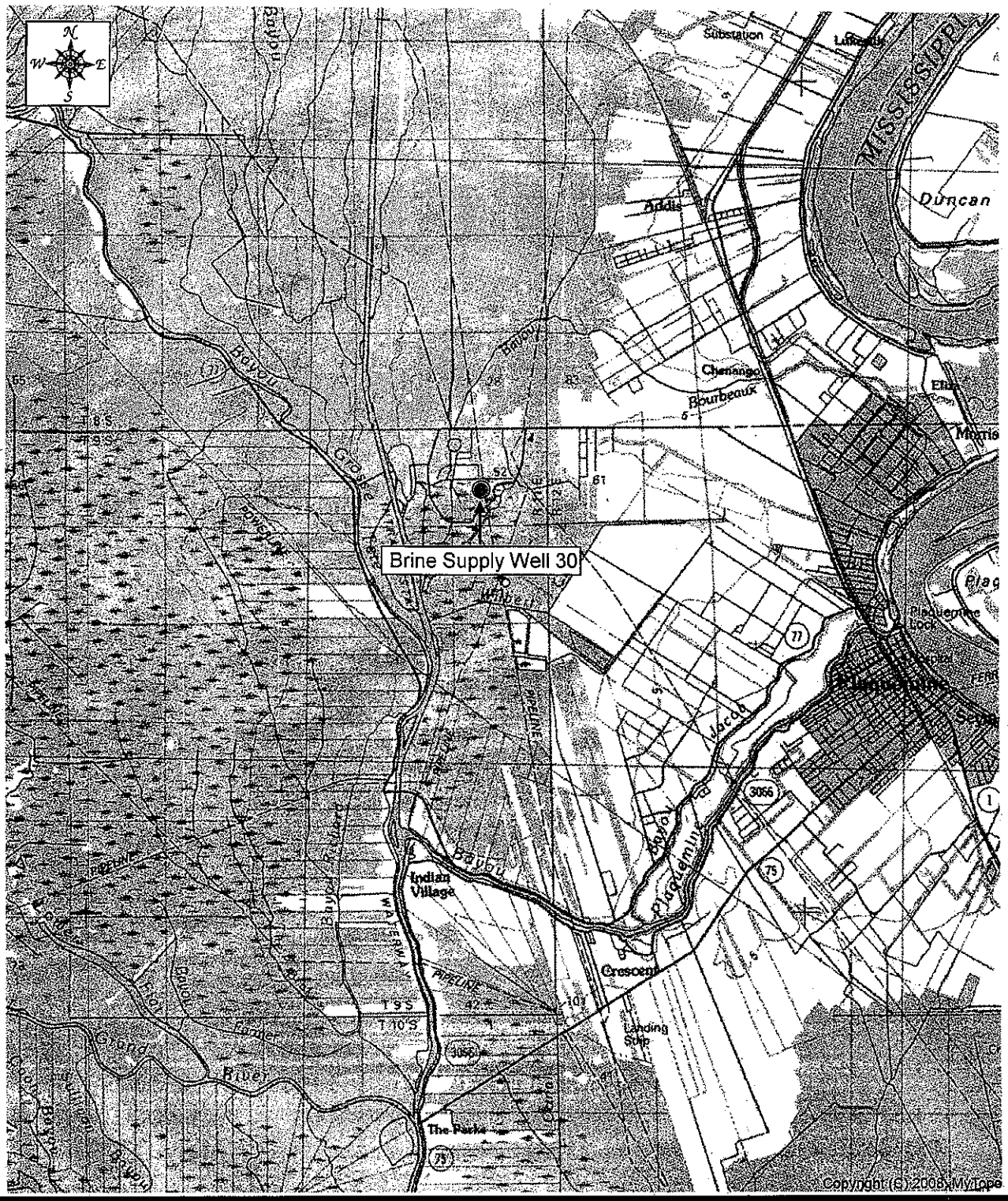

PETROLOGISTICS

Project Location Map

Brine Supply Well 30
Iberville Parish, Louisiana

USGS 35-Minute Quadrangles, Baton Rouge, LA

Scale: 1:100,000

GAI
Gremminger and Associates, Inc.
environmental planning and permitting consultants

Gremminger & Associates, INC.
226 South Live Oak Street
Bellville, Texas 77418

FIGURE: 1

DATE: 11/05/2010

GAI Project Number: 210209

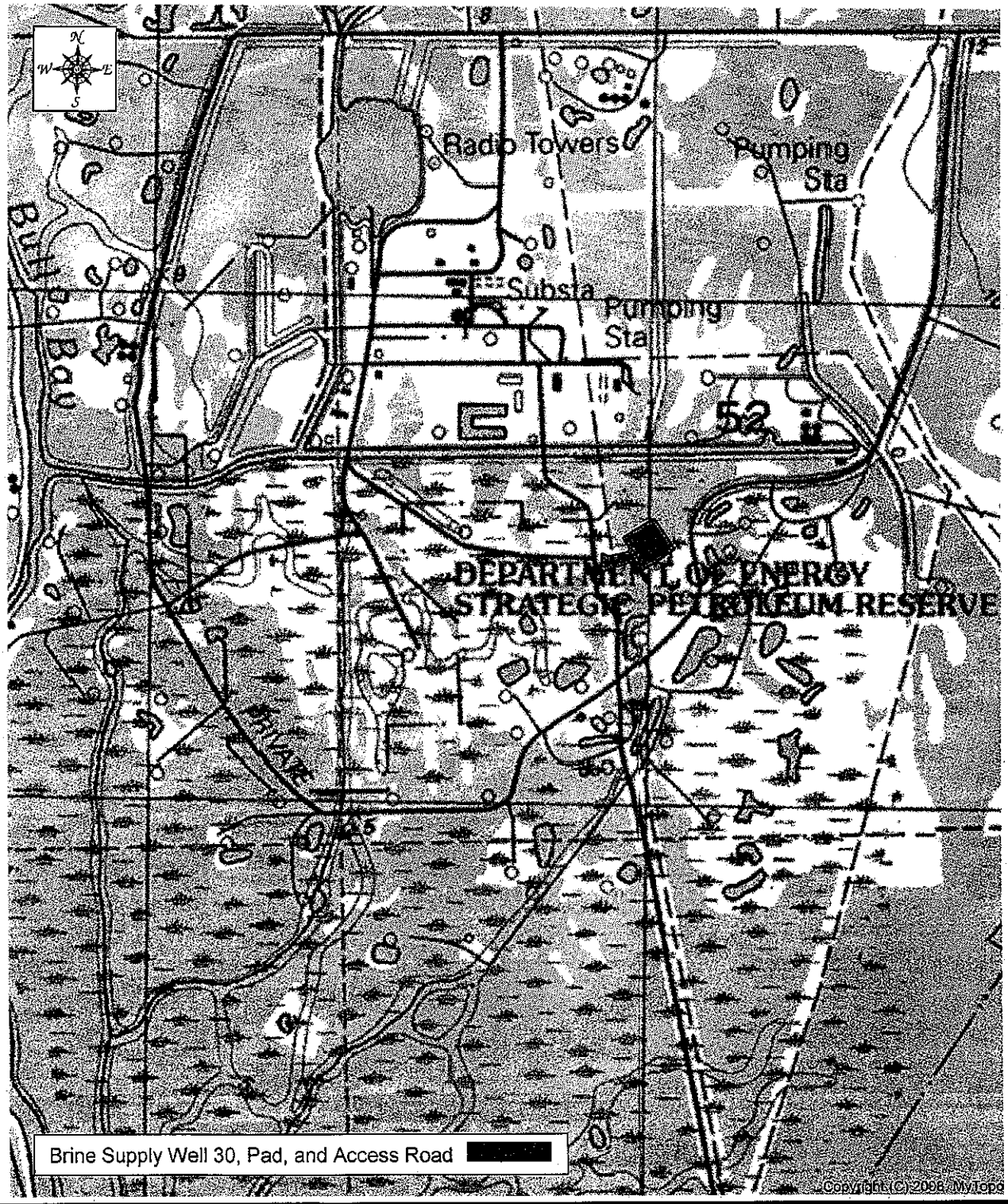

PETROLOGISTICS

Project Location Map

Brine Well 30
Iberville Parish, Louisiana

USGS 7.5-Minute Quadrangles, Addis, LA

Scale: 1:12,000

GAI
Gremminger and Associates, Inc.
environmental planning and permitting consultants

Gremminger & Associates, INC.
226 South Live Oak Street
Bellville, Texas 77418

FIGURE: 2

DATE: 11/04/2010

GAI Project Number: 210209

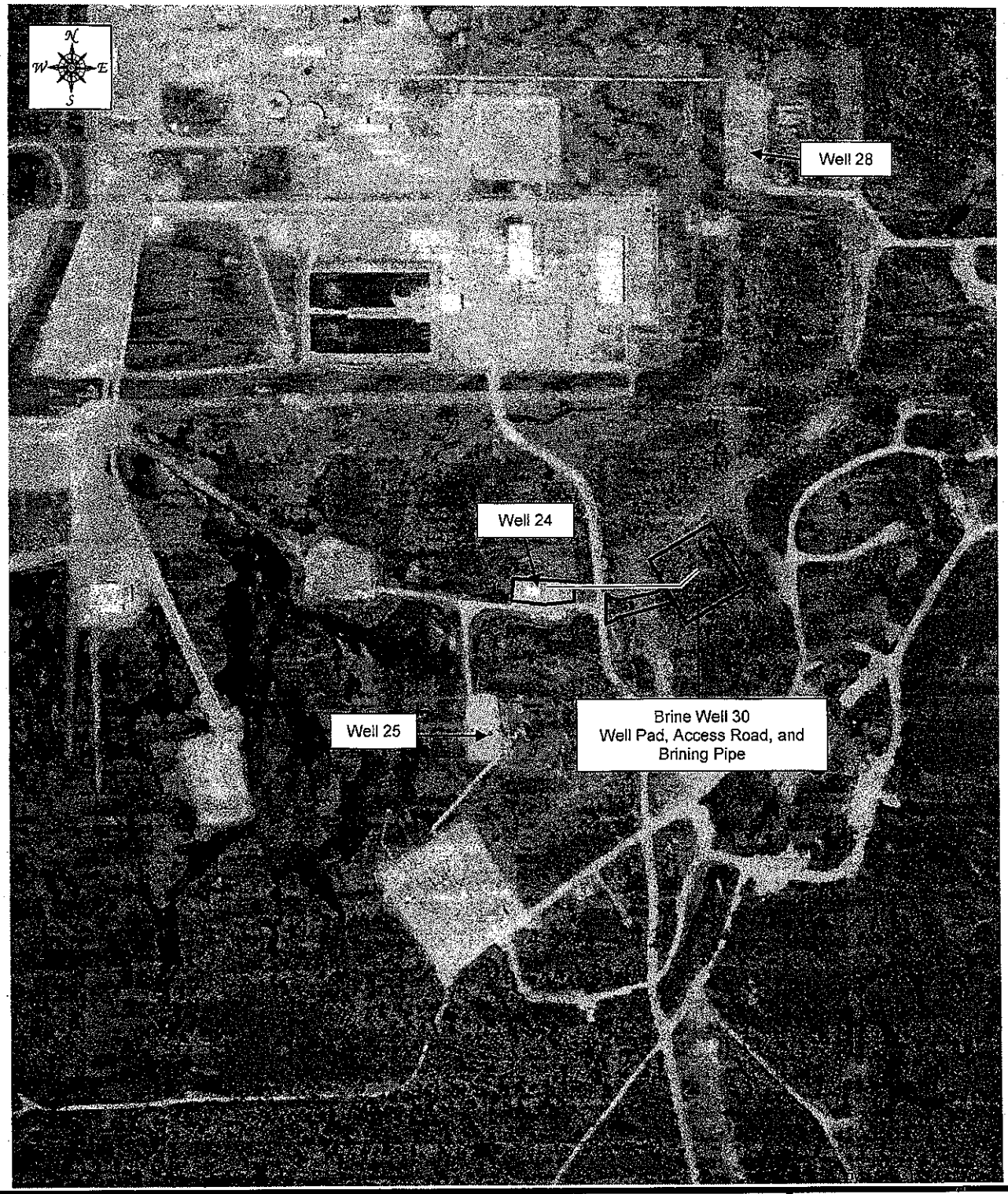

PETROLOGISTICS

Project Location Map

Brine Well 30
Iberville Parish, Louisiana

May 18, 2009 USGS Aerial Photograph,
Addis Northeast and Addis Southeast, LA

Scale: 1:12,000

GAI
Gremminger and Associates, Inc.
environmental planning and permitting consultants

Gremminger & Associates, INC.
226 South Live Oak Street
Bellville, Texas 77418

FIGURE: 3

DATE: 11/05/2010

GAI Project Number: 210209

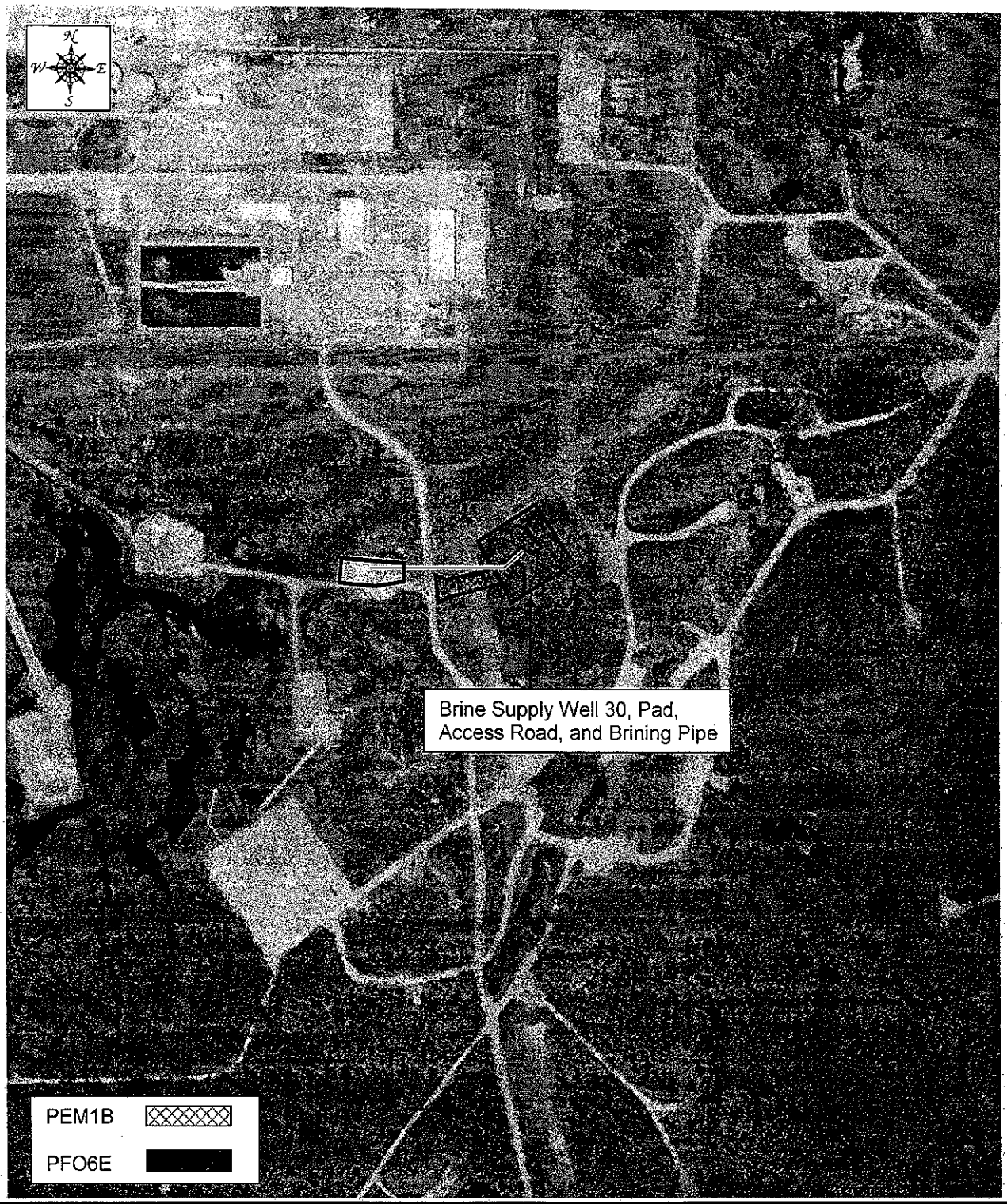

PETROLOGISTICS

Wetland Impacts Map

Brine Well 30
Iberville Parish, Louisiana

May 18, 2009 USGS Aerial Photograph, Addis Northeast and Addis Southeast, LA

Scale: 1:12,000

GAI
Gremminger and Associates, Inc.
environmental planning and permitting consultants

Gremminger & Associates, INC.
226 South Live Oak Street
Bellville, Texas 77418

FIGURE: 4

DATE: 11/05/2010

GAI Project Number: 210209

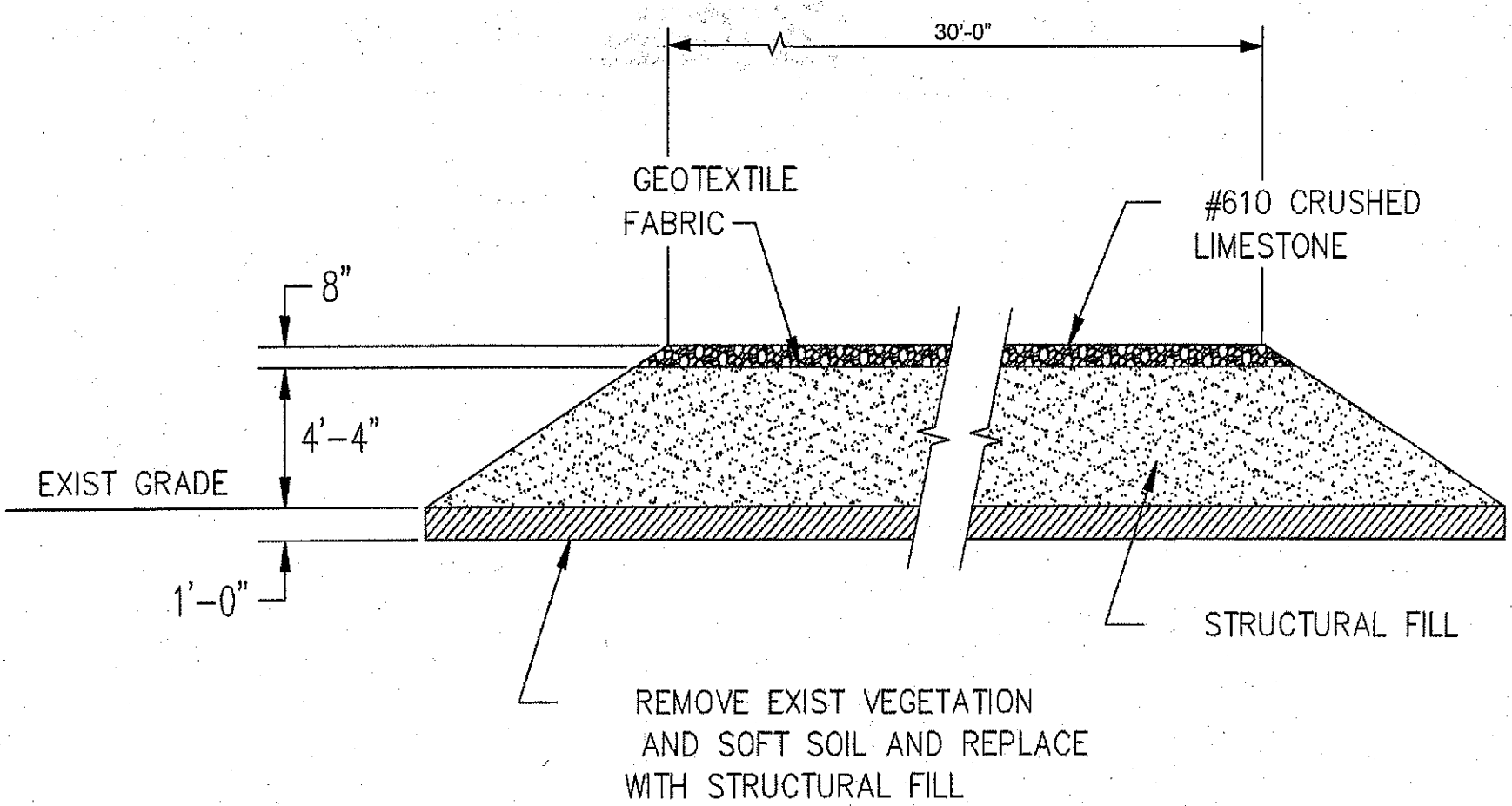

PETROLOGISTICS

Access Road Cross-Section B—B Detail
Brine Well Pad 30 Project
Iberville Parish, Louisiana

Reference: Plan Drawing SK-07MS9140-003

GAI
Gremminger and Associates, Inc.
environmental planning and permitting consultants
Gremminger & Associates, Inc.
226 South Live Oak Street
Belville, Texas 77418

FIGURE: 7

DATE: 11/05/2010

GAI Project Number: 210209

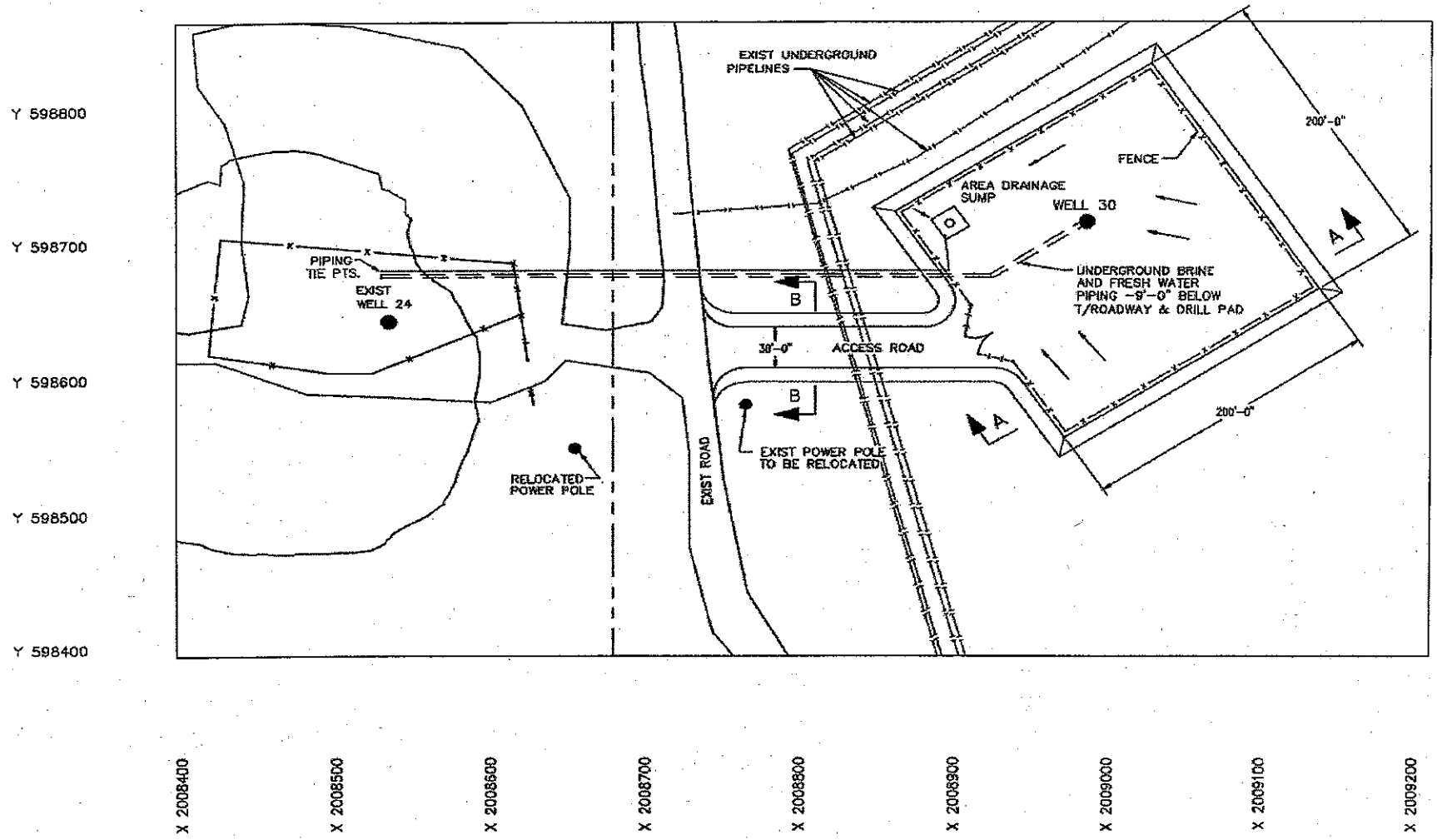

ENLARGED PLAN
SK-07MS9140-002

PETROLOGISTICS

Plan Detail
Brine Well Pad 30 Project
Iberville Parish, Louisiana

Reference: Plan Drawing SK-07MS9140-002

Gremminger & Associates, Inc.
226 South Live Oak Street
Bellville, Texas 77418

FIGURE: 5

DATE: 11/05/2010

GAI Project Number: 210209

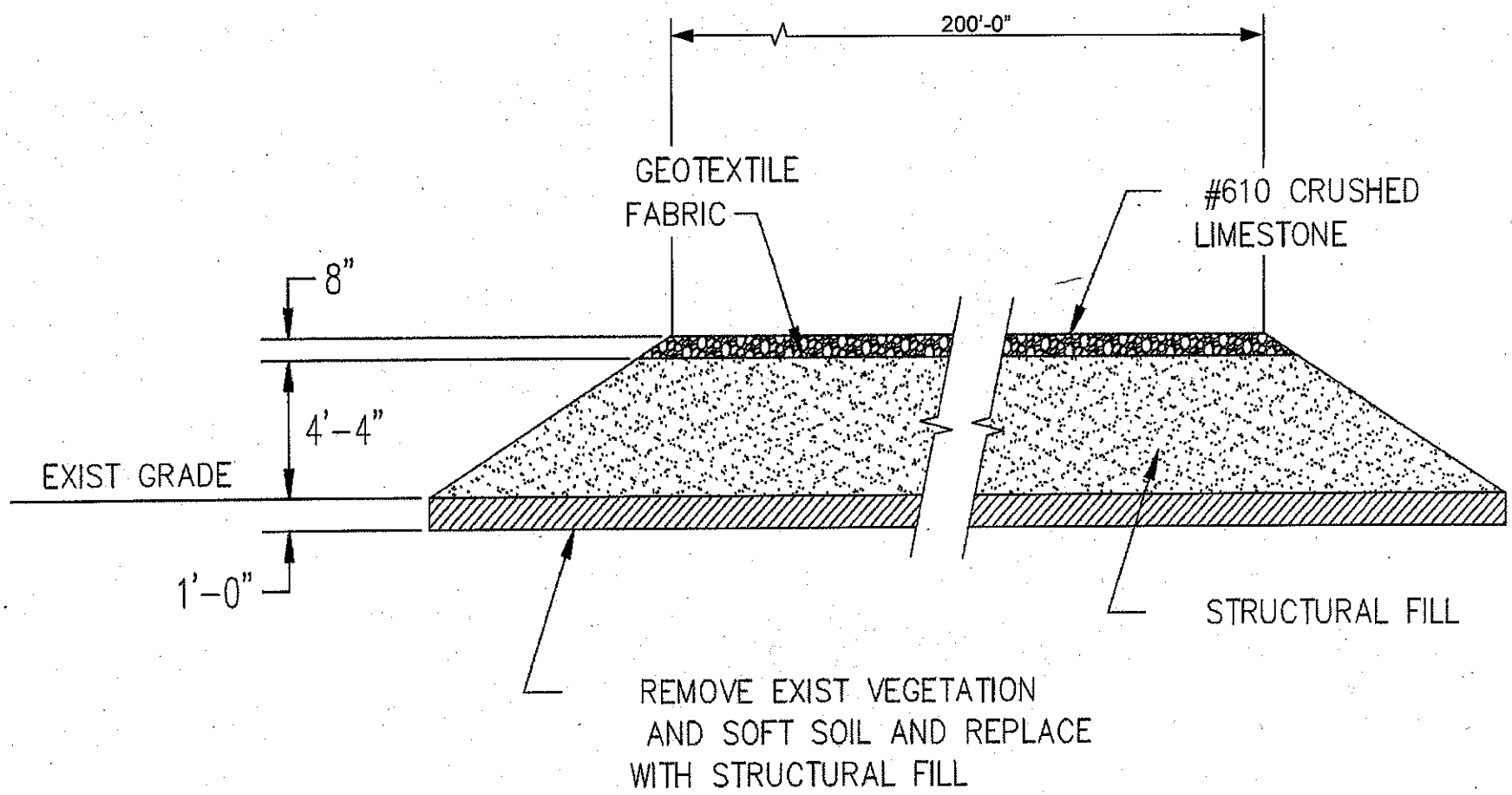

PETROLOGISTICS

Well Pad Cross-Section A—A Detail
Brine Well Pad 30 Project
Iberville Parish, Louisiana

Reference: Plan Drawing SK-07MS9140-003

GAI
Gremminger and Associates, Inc.
environmental planning and permitting consultants
Gremminger & Associates, Inc.
226 South Live Oak Street
Belville, Texas 77418

FIGURE: 6

DATE: 11/05/2010

GAI Project Number: 210209

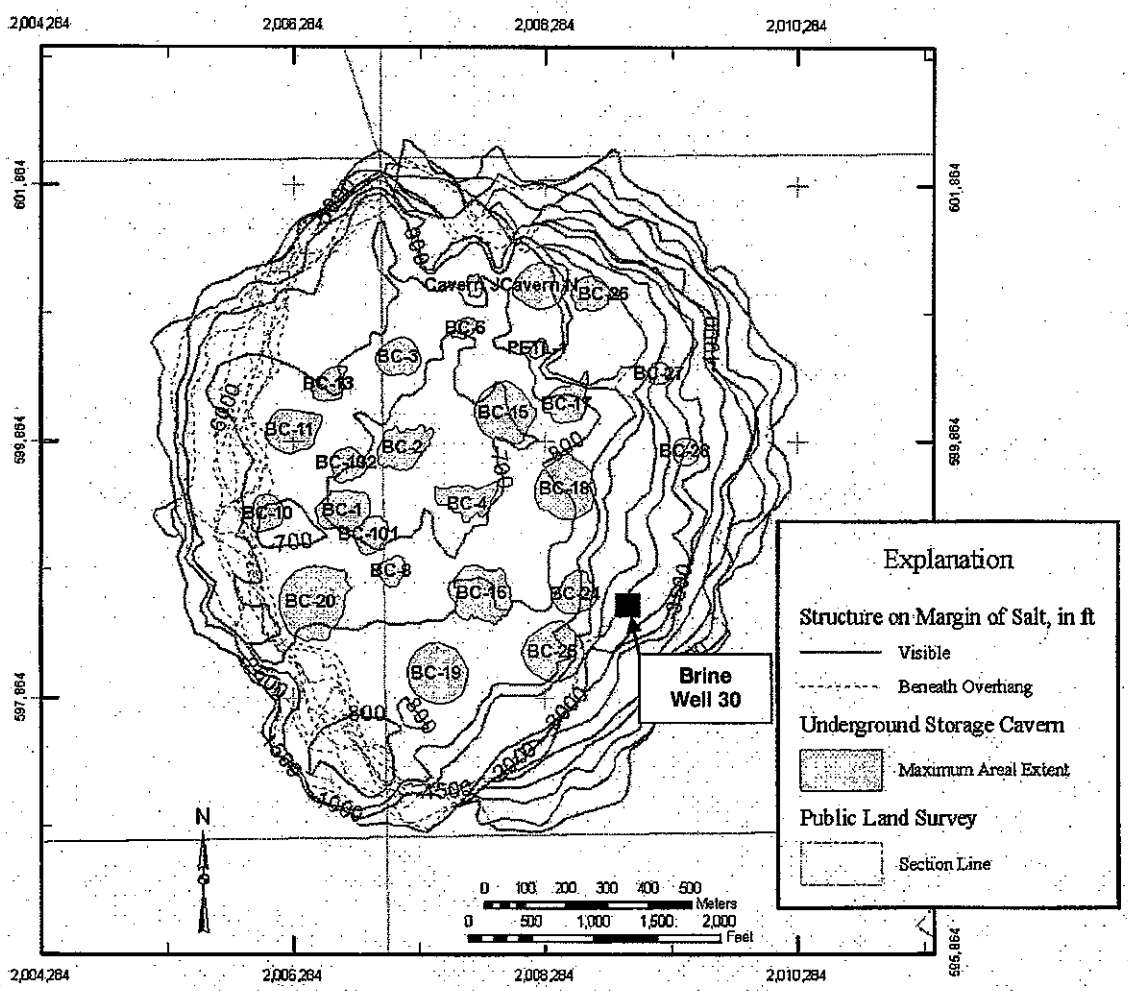

PETROLOGISTICS

Proposed Brine Well 30
Choctaw Dome Existing Wells
Iberville Parish, Louisiana

Not to Scale

GAI
Gremminger and Associates, Inc.
environmental planning and permitting consultants

FIGURE: 8

DATE: 10/20/2010

GAI Project Number: 210195