Sewer Acct.#: **1003803000**

Company: **BRIDGETON LANDFILL LLC**

Address: **13570 St. Charles Rock Road**

City: **Bridgeton**

State and Zip: **MO 63044**

Industry ID	File Code	File Description
17931	31	INDUSTRY OVERFLOW

ACCOUNT NUMBER: **10038030-00**

COMPANY NAME: **BRIDGETON LANDFILL LLC**

CORRESPONDENCE

FROM 09-01-15 THRU 12-22-15

X	CORRESPONDANCE LOCATED IN OVERFLOW INDUSTRY FILE

Doug Mendoza Bridgeton Landfill

From: John Lodderhose
Sent: Tuesday, December 22, 2015 10:49 AM
To: Mike Shelton; Kurt Bussman
Cc: Doug Mendoza
Subject: RE: Mikan Construction, date of loss 01/05/2015, Claim #P1532
Attachments: Bridgeton Landfill Development Agreement June 25 2014.pdf

We do have a contract with Bridgeton Landfill (attached) which includes payment for expenses of the operation and maintenance of the pump stations and forcemain. Operations has been handing the billing of expenses.

John R. Lodderhose, P.E.
Metropolitan St. Louis Sewer District
Assistant Director of Engineering
Environmental Compliance
314-436-8714

From: Mike Shelton
Sent: Tuesday, December 22, 2015 10:26 AM
To: Kurt Bussman
Cc: John Lodderhose
Subject: FW: Mikan Construction, date of loss 01/05/2015, Claim #P1532

Kurt,
Sever received this email about Mikan. He was covering for Joe Biondo and he noticed that the main was down so we contacted operations about the situation. Bi State Utilities took out the permit to do this work and Mikan was used in this area to help with time constraints. Since this is a private development we have don't have any contract with the contractor.
I have copied John Lodderhose with this email because I think we have a contract with the Bridgeton Landfill stating that any costs incurred by MSD is reimbursable from the Landfill.
Hope this information is helpful.
If you need anything else please let me know.

Mike Shelton
Construction Inspector Supervisor
Metropolitan St. Louis Sewer District
2350 Market Street
St. Louis, MO 63103
P(314)768-6387

From: Sever A. Leone
Sent: Thursday, December 17, 2015 9:13 AM
To: Mike Shelton
Subject: FW: Mikan Construction, date of loss 01/05/2015, Claim #P1532

Mike,

I received this e-mail this morning, I did not respond, nor have I had any correspondence with anyone pertaining to this matter. I wanted to get you on board asap. I will wait to hear from you on how to proceed.

From: Miranda Huston-Range [mailto:MHuston-Range@patnat.com]
Sent: Wednesday, December 16, 2015 2:41 PM
To: Sever A. Leone
Subject: Mikan Construction, date of loss 01/05/2015, Claim #P1532

Mr. Leone,
Good afternoon. I am contacting you regarding an incident which occurred on January 5th, 2015 at or near 9520 St Charles Rock Road. Mikan Construction, sub-contractor of BI-State Utilities, drilled through MSD's main while working on a project by the Bridgton landfill. Ben Fuchs, an adjuster handling MSD claims, has been working with Mikan's insurance company in order to recover the cost of the damages. Today I spoke with Mikan's adjuster who is requesting additional information in order to consider this claim. Specifically, they are looking for the contract between the GM and MSD for the work completed. They are also requesting proof of locates.

Would you be able to assist me with this? If not, perhaps you can suggest who I might contact to gather this information?

Sincerely,
Miranda Huston-Range, AIC

Miranda Huston-Range | Liability Supervisor
Corporate Claims Management, Inc.
782 Spirit 40 Park Drive, Chesterfield, MO, 63005
Tel: 636.728.6755
MHuston-Range@patnat.com | corporateclaims.com

A Patriot National Company | ***We Find Solutions*** | ***PN • LISTED • NYSE***

This communication, including attachments, is intended solely for the named recipients. If the reader or recipient of this communication is not the intended recipient, an employee or agent of the intended recipient who is responsible for delivering it to the intended recipient, or you believe that you have received this communication in error, please notify the sender immediately by reply e-mail and promptly delete this communication, including attachments without reading or saving it in any manner. Receipt by anyone other than the intended recipient(s) is not a waiver of the attorney/client privilege, work-product doctrine, or any other privileges.

TO: **File**

FROM: Angie McDonough amm

DATE: December 17, 2015

RE: **BRIDGETON LANDFILL LLC**
WASTEWATER USER CHARGE BILLING
ACCOUNT NUMBER 0039145-8

Pursuant to the MSD Industrial Wastewater Discharge Permit for the above referenced facility, this facility will be billed for the following charges for the indicated billing period:

DISCHARGE PERIOD: **November 2015**

BILLING IS FOR: **On- Site Special Discharge**

SAMPLE POINT: **013 - Commingled landfill leachate and landfill gas collection system condensate.**

Billing Item	Quantity	Units	Rate	Charge
Volume	8,512	CcF	$ 3.21 /CcF	$27,323.52
COD Extra-Strength Surcharge	2,347	mg/L	$316.19 /ton	$14,669.90
Total	--	--	--	**$41,993.42**

If you have any questions, please call me at extension 8762.

bv

ec: Brian Gibson
Doug Mendoza
Bridgeton Republic Services

FILE: IU, Bridgeton Landfill LLC, 1003-8030-00

Doug Mendoza

Bridgeton Landfill

From: Ed Galbraith <EGalbraith@barr.com>
Sent: Monday, December 14, 2015 1:40 PM
To: John Lodderhose; Rob G Daly
Cc: Doug Mendoza; Mark Bright; Michael Grace; 'Kamp, Kevin'; 'bpower@republicservices.com'; 'Bouchard, Derek (DBouchard@republicservices.com)'; 'Koziatek, Dan'; Ethan R. Voyles; William C. Selby; 'LaFata, Natalie'; Fanning, Erin
Subject: Final Report - PS-1 Air Sampling
Attachments: Air sampling memo_2015_1016 final ver.pdf; 1015-70.pdf

Attached is the most recent technical memorandum for air sampling at PS-1 This report includes all sampling through 10/16/2015, including the sixth canister event required by *PS-1 Sampling and Analytical Plan*. The sampling conditions of the plan have been met and we believe that no further air sampling is necessary at PS-1. Please let me know if you have any comments or questions.

Thank you.

Ed Galbraith

Senior Environmental Consultant
Jefferson City, MO office: 573.638.5024
cell: 573.418.5562
egalbraith@barr.com
www.barr.com

resourceful. naturally. BARR

resourceful. naturally.
engineering and environmental consultants

BARR

Technical Memorandum

To: Brian Powers, Bridgeton Landfill
From: Ed Galbraith, Barr Engineering Co.
Subject: Air Sampling Results at PS-1
Date: December 15, 2015
c: Derek Bouchard, Kevin Kamp, Dan Koziatek

Background

This memo is an update on air monitoring at the Bridgeton Landfill lift station (LS)/bypass valve chamber (VC) (PS-1) as outlined in *PS-1 Sampling and Analytical Plan*. Revisions to the PS-1 sampling plan were approved by the Metropolitan St. Louis Sewer District (MSD) on August 25, 2015, and the revised plan was submitted September 1, 2015. The revisions included having the doors to PS-1 remain open during canister sampling and reducing the field instrument readings to once every two weeks until the new ventilation system is in place.

Barr Engineering Co. conducted the sixth and final canister sampling on October 16, 2015. This memo transmits the results of that sampling event and provides a discussion of all results for canister and field instrument monitoring through October 16, 2015.

Canister Sampling

Barr personnel conducted sampling on October 16, 2015. The sampling was conducted with the doors open, consistent with the plan modifications discussed above. There were no significant deviations from the approved sampling plan. Two summa canisters, each with an 8-hour regulator were deployed; one in the LS at approximately 0910 and one in the VC at approximately 0915. The regulators did not maintain pressure for the full 8 hours. The lift station sample maintained pressure for 7 hours, 20 minutes. The VC sample maintained pressure for 5 hours, 15 minutes. Both canisters were retrieved with 4-inch Hg pressure remaining. According to the laboratory, the shipping process can cause minor disruption to the controller diaphragm, and that is likely what caused the shortened time frame. In both cases, the sample result is believed to be representative of the time integral for each canister.

The analytical report from Enthalpy Analytical is attached, and the results are summarized in Table 1. Any laboratory quality control issues are noted in Table 1 or discussed in the report narrative summaries. All results were below worker protection levels.

Bridgeton Landfill has completed six canister events under the sampling plan with no exceedances of applicable worker threshold levels.

Field Meter Sampling

Bridgeton Landfill has completed field instrument sampling on 34 days over the period from February 13, 2015 to October 16, 2015, which is about 35 weeks. There have been occasional minor excursions of action levels as discussed below.

Benzene

The benzene RAE-SEP field meter results on April 11, 2015 indicated 1.1 parts per million (ppm) in the LS and 0.85 ppm in the VC. The sample was taken during an extended period of vacuum interruption because of operational issues with an extraction sump. At the time of the sample, there was zero negative vacuum as indicated by the vacuum system meter. Since this time, a redundant tie-in with a second portion of the gas system has been completed. Additionally, an expansion of the gas header is completed and working as designed. These two improvements will ensure both redundancy of operation and greater volume of operation.

After the April 11, 2015 reading, both doors were opened and the wet well was allowed to vent passively for approximately 3 hours. Since then, all field readings for benzene have been zero or well below worker threshold levels. This includes multiple samples taken during the following week and during a vacuum interruption for the redundant tie-in. Field samples thereafter continued to be taken when the doors had been closed for at least 24 hours prior. Subsequent benzene tests taken during vacuum interruptions were non-detect. This indicates that the presence of benzene on April 11, 2015 may have been residual accumulation prior to LS construction completion and that migration is no longer possible after final sealing of the wet well was completed.

Oxygen

Low oxygen readings ranging from 17.3 percent to 19.4 percent O_2 have been noted on 7 out of 96 samples. Of the 7 readings, all were taken when the doors were closed for at least 24 hours prior to taking the sample and remained closed while the sample was taken. After the first reading on April 29, 2015, the doors were opened to deploy the canisters, and subsequent oxygen levels taken that day were all above the action level of 19.5 percent O_2.

Lower Explosive Limit (LEL)

On June 30, 2015, one of the eight LEL readings was recorded as 10 percent LEL; however, we believe that equipment malfunction contributed to a false reading. Field staff employed two MX4 four-gas meters. For the first set of readings, one MX4 was used in the LS and the other in the VC. The MX4 in the LS was fluctuating significantly between 3-16 percent LEL while the MX4 in the VC was more stable with readings between 2-4 percent LEL. Staff recorded a 10 percent LEL

for the LS and 3 percent LEL for the VC. Staff then exposed both units to ambient air and observed that the MX4 that was used to record the LS reading continued to fluctuate between 0-10 percent LEL while the other unit displayed 0-1 percent LEL. For the six remaining tests, both units were employed in both the LS and the VC. The one unit continued to fluctuate significantly, so readings were recorded from the more stable unit. Those readings ranged from 2-4 percent LEL.

Summary

The data find that, in general, levels are below defined worker exposure levels. The exceptions have occurred under conditions that are not representative of actual worker exposure, i.e., where the doors have been closed for 24 hours prior to sampling. Even in those cases where the doors are opened to deploy the canisters and then closed for 8 hours (again, not a representative working condition), the data indicate that levels within the chamber meet relevant exposure and action levels. It should also be noted that the exceptional readings occurred only with direct-read field instruments utilizing filtering media, which are a less discerning and more error-prone methodology than the laboratory analytical.

The sampling conditions of the *PS-1 Sampling and Analytical Plan* have been substantially met. No further air sampling at PS-1 is recommended.

If you have any questions, feel free to contact me at 573-638-5024.

Attachments

- Air Sampling Data 2015_1016
- Enthalpy Lab Report 1015-70

Table 1
Bridgeton Landfill PS-1 Air Data

				Parameter	Carbon Monoxide	Hydrogen Sulfide	Oxygen	LEL (CH4)	Benzene	Total VOC	Dimethyl Sulfide	Ammonia	Methane (CH4)
				Action Level	> 25 ppm	> 10 ppm	< 19.5 %	> 10 %					
				ACGIH TLV-TWA (ppm)					0.5		10	25	
				ACGIH TLV-TWA (ug/m3)					1600		25000	17000	
Location	Date	Lab Name	Data Status	Lab Report Number									
LS	10/16/2015	Field	No QC	Field	0 ppm	0 ppm	20.9%	0.0%	–	–	–	–	–
VC	10/16/2015	Field	No QC	Field	0 ppm	0 ppm	21.1%	0.0%	–	–	–	–	–
LS	10/16/2015	Field	No QC	Field	0 ppm	0.7 ppm	21.2%	0.0%	–	–	–	–	–
VC	10/16/2015	Field	No QC	Field	0 ppm	0 ppm	21.3%	0.0%	–	–	–	–	–
LS	10/16/2015	Field	No QC	Field	0 ppm	0 ppm	20.9%	0.0%	–	–	–	–	–
VC	10/16/2015	Field	No QC	Field	0 ppm	0 ppm	21.1%	0.0%	–	–	–	–	–
LS	10/16/2015	Field	No QC	Field	0 ppm	0 ppm	20.9%	0.0%	–	–	–	–	–
VC	10/16/2015	Field	No QC	Field	0 ppm	0 ppm	21.1%	0.0%	–	–	–	–	–
LS	10/15/2015	Field	No QC	Field	0 ppm	0 ppm	20.9%	0.0%	0.0 ppm	–	–	–	–
VC	10/15/2015	Field	No QC	Field	0 ppm	0 ppm	20.9%	0.0%	0.0 ppm	–	–	–	–
LS	9/30/2015	Field	No QC	Field	0 ppm	0 ppm	20.9%	0.0%	0.0 ppm	–	–	–	–
VC	9/30/2015	Field	No QC	Field	0 ppm	0 ppm	20.9%	0.0%	0.0 ppm	–	–	–	–
LS	9/18/2015	Field	No QC	Field	0 ppm	0 ppm	20.9%	0.0%	0.0 ppm	–	–	–	–
VC	9/18/2015	Field	No QC	Field	0 ppm	0 ppm	20.9%	0.0%	0.0 ppm	–	–	–	–
LS	9/3/2015	Field	No QC	Field	0 ppm	0.2 ppm	20.7%	0.0%	–	–	–	–	–
VC	9/3/2015	Field	No QC	Field	0 ppm	0 ppm	20.9%	0.0%	–	–	–	–	–
LS	9/3/2015	Field	No QC	Field	0 ppm	0 ppm	20.7%	0.0%	–	–	–	–	–
VC	9/3/2015	Field	No QC	Field	0 ppm	0 ppm	20.7%	0.0%	–	–	–	–	–
LS	9/3/2015	Field	No QC	Field	0 ppm	0 ppm	20.5%	0.0%	–	–	–	–	–
VC	9/3/2015	Field	No QC	Field	0 ppm	0 ppm	20.6%	0.0%	–	–	–	–	–
LS	9/3/2015	Field	No QC	Field	0 ppm	0.3 ppm	20.5%	0.0%	–	–	–	–	–
VC	9/3/2015	Field	No QC	Field	0 ppm	0.3 ppm	20.6%	0.0%	–	–	–	–	–
LS	9/3/2015	Field	No QC	Field	0 ppm	0 ppm	17.3%	0.0%	0.0 ppm	–	–	–	–
VC	9/3/2015	Field	No QC	Field	0 ppm	0 ppm	20.9%	0.0%	0.0 ppm	–	–	–	–
LS	8/21/2015	Field	No QC	Field	0 ppm	0 ppm	20.8%	0.0%	0.0 ppm	–	–	–	–
VC	8/21/2015	Field	No QC	Field	0 ppm	0 ppm	20.8%	0.0%	0.0 ppm	–	–	–	–
LS	8/14/2015	Field	No QC	Field	0 ppm	0 ppm	22.1%	0.0%	0.0 ppm	–	–	–	–
VC	8/14/2015	Field	No QC	Field	0 ppm	0 ppm	22.1%	0.0%	0.0 ppm	–	–	–	–
LS	8/7/2015	Field	No QC	Field	0 ppm	0 ppm	21.5%	0.0%	0.0 ppm	–	–	–	–
VC	8/7/2015	Field	No QC	Field	0 ppm	0 ppm	21.5%	0.0%	0.0 ppm	–	–	–	–
LS	7/29/2015	Field	No QC	Field	0 ppm	0 ppm	20.9%	0.0%	0.0 ppm	–	–	–	–
VC	7/29/2015	Field	No QC	Field	0 ppm	0 ppm	20.9%	0.0%	0.0 ppm	–	–	–	–
LS	7/22/2015	Field	No QC	Field	0 ppm	0 ppm	22.3%	0.0%	0.0 ppm	–	–	–	–
VC	7/22/2015	Field	No QC	Field	0 ppm	0 ppm	22.3%	0.0%	0.0 ppm	–	–	–	–
LS	7/15/2015	Field	No QC	Field	0 ppm	0 ppm	21.2%	0.0%	0.0 ppm	–	–	–	–
VC	7/15/2015	Field	No QC	Field	0 ppm	0 ppm	21.2%	0.0%	0.0 ppm	–	–	–	–
LS	6/30/2015	Field	No QC	Field	0 ppm	0 ppm	20.8%	3%	–	–	–	–	–
VC	6/30/2015	Field	No QC	Field	0 ppm	0 ppm	20.8%	3%	–	–	–	–	–
LS	6/30/2015	Field	No QC	Field	0 ppm	0 ppm	20.8%	3%	–	–	–	–	–
VC	6/30/2015	Field	No QC	Field	0 ppm	0 ppm	20.8%	2%	–	–	–	–	–
LS	6/30/2015	Field	No QC	Field	0 ppm	0 ppm	20.9%	4%	–	–	–	–	–
VC	6/30/2015	Field	No QC	Field	0 ppm	0 ppm	20.9%	2%	–	–	–	–	–
LS	6/30/2015	Field	No QC	Field	0 ppm	0.3 ppm	20.4%	10% BQS	–	–	–	–	–
VC	6/30/2015	Field	No QC	Field	0 ppm	0 ppm	20.6%	3%	–	–	–	–	–
LS	6/29/2015	Field	No QC	Field	0.0 ppm	0.0 ppm	20.9%	0.0%	0.0 ppm	–	–	–	–
VC	6/29/2015	Field	No QC	Field	0.0 ppm	0.0 ppm	20.9%	0.0%	0.0 ppm	–	–	–	–
LS	6/25/2015	Field	No QC	Field	0.0 ppm	0.0 ppm	19.4%	0.0%	0.05 ppm	–	–	–	–
VC	6/25/2015	Field	No QC	Field	0.0 ppm	0.0 ppm	20.2%	0.0%	0.0 ppm	–	–	–	–
LS	6/18/2015	Field	No QC	Field	0.0 ppm	0.0 ppm	20.9%	0.0%	0.0 ppm	–	–	–	–
VC	6/18/2015	Field	No QC	Field	0.0 ppm	0.0 ppm	20.9%	0.0%	0.0 ppm	–	–	–	–
LS	6/11/2015	Field	No QC	Field	0.0 ppm	0.0 ppm	18.5%	0.0%	0.0 ppm	–	–	–	–
VC	6/11/2015	Field	No QC	Field	0.0 ppm	0.0 ppm	19.7%	0.0%	0.0 ppm	–	–	–	–
LS	6/3/2015	Field	No QC	Field	0.0 ppm	0.0 ppm	19.0%	0.0%	0.0 ppm	–	–	–	–
VC	6/3/2015	Field	No QC	Field	0.0 ppm	0.0 ppm	20.1%	0.0%	0.0 ppm	–	–	–	–
LS	5/28/2015	Field	No QC	Field	0 ppm	0 ppm	20.4%	5%	–	–	–	–	–
VC	5/28/2015	Field	No QC	Field	0 ppm	0 ppm	20.9%	1%	–	–	–	–	–

MSD 033147

Table 1
Bridgeton Landfill PS-1 Air Data

				Parameter	Carbon Monoxide	Hydrogen Sulfide	Oxygen	LEL (CH4)	Benzene	Total VOC	Dimethyl Sulfide	Ammonia	Methane (CH4)
				Action Level	> 25 ppm	> 10 ppm	< 19.5 %	> 10 %					
				ACGIH TLV-TWA (ppm)					0.5		10	25	
				ACGIH TLV-TWA (ug/m3)					1600		25000	17000	
Location	Date	Lab Name	Data Status	Lab Report Number									
LS	5/28/2015	Field	No QC	Field	0 ppm	0 ppm	20.9%	2%	–	–	–	–	–
VC	5/28/2015	Field	No QC	Field	0 ppm	0 ppm	20.9%	1%	–	–	–	–	–
LS	5/28/2015	Field	No QC	Field	0 ppm	0 ppm	20.5%	4%	–	–	–	–	–
VC	5/28/2015	Field	No QC	Field	0 ppm	0 ppm	20.9%	1%	–	–	–	–	–
LS	5/28/2015	Field	No QC	Field	0 ppm	0 ppm	20.2%	2%	–	–	–	–	–
VC	5/28/2015	Field	No QC	Field	0 ppm	0 ppm	20.8%	0%	–	–	–	–	–
LS	5/28/2015	Field	No QC	Field	0 ppm	0.2 ppm	20.8%	0%	–	–	–	–	–
VC	5/28/2015	Field	No QC	Field	0 ppm	0 ppm	20.9%	0%	–	–	–	–	–
LS	5/28/2015	Field	No QC	Field	–	–	–	–	0 ppm	–	–	–	–
VC	5/28/2015	Field	No QC	Field	–	–	–	–	0 ppm	–	–	–	–
LS	5/20/2015	Field	No QC	Field	0.0 ppm	0.0 ppm	19.0%	0.0%	0.0 ppm	–	–	–	–
VC	5/20/2015	Field	No QC	Field	0.0 ppm	0.0 ppm	20.1%	0.0%	0.0 ppm	–	–	–	–
LS	5/13/2015	Field	No QC	Field	8.0 ppm	0 ppm	18.7%	3.0%	0 ppm	–	–	–	–
VC	5/13/2015	Field	No QC	Field	2.0 ppm	0 ppm	19.8%	0%	0 ppm	–	–	–	–
LS	5/6/2015	Field	No QC	Field	5.0 ppm	0.5 ppm	20.9%	0%	0 ppm	–	–	–	–
VC	5/6/2015	Field	No QC	Field	1.0 ppm	0 ppm	21.0%	0%	0 ppm	–	–	–	–
LS	4/29/2015	Field	No QC	Field	8 ppm	0 ppm	20.9%	0%	–	–	–	–	–
VC	4/29/2015	Field	No QC	Field	0 ppm	0 ppm	21.0%	0%	–	–	–	–	–
LS	4/29/2015	Field	No QC	Field	0 ppm	0 ppm	20.9%	2%	–	–	–	–	–
VC	4/29/2015	Field	No QC	Field	0 ppm	0 ppm	20.8%	0%	–	–	–	–	–
LS	4/29/2015	Field	No QC	Field	1 ppm	0 ppm	18.7%	0%	0 ppm	–	–	–	–
VC	4/29/2015	Field	No QC	Field	0 ppm	0 ppm	20.9%	0%	–	–	–	–	–
LS	4/29/2015	Field	No QC	Field	0 ppm	0 ppm	20.7%	1%	–	–	–	–	–
VC	4/29/2015	Field	No QC	Field	0 ppm	0 ppm	21.0%	0%	–	–	–	–	–
LS	4/22/2015	Field	No QC	Field	0.0 ppm	0.0 ppm	21.0%	0.0%	0.0 ppm	–	–	–	–
VC	4/22/2015	Field	No QC	Field	0.0 ppm	0.0 ppm	21.0%	0.0%	0.0 ppm	–	–	–	–
LS	4/21/2015	Field	No QC	Field	0.0 ppm	0.0 ppm	20.9%	0.0%	0.0 ppm	–	–	–	–
VC	4/21/2015	Field	No QC	Field	0.0 ppm	0.0 ppm	20.9%	0.0%	0.0 ppm	–	–	–	–
LS	4/20/2015	Field	No QC	Field	0.0 ppm	0.0 ppm	20.8%	0.0%	0.0 ppm	–	–	–	–
VC	4/20/2015	Field	No QC	Field	0.0 ppm	0.0 ppm	20.8%	0.0%	0.0 ppm	–	–	–	–
LS	4/17/2015	Field	No QC	Field	0.0 ppm	0.0 ppm	20.5%	0.0%	0.0 ppm	–	–	–	–
VC	4/17/2015	Field	No QC	Field	0.0 ppm	0.0 ppm	20.5%	0.0%	0.0 ppm	–	–	–	–
LS	4/16/2015	Field	No QC	Field	0.0 ppm	0.0 ppm	20.7%	0.0%	0.0 ppm	–	–	–	–
VC	4/16/2015	Field	No QC	Field	0.0 ppm	0.0 ppm	20.7%	0.0%	0.0 ppm	–	–	–	–
LS	4/15/2015	Field	No QC	Field	0.0 ppm	0.5 ppm	20.5%	0.0%	0.0 ppm	–	–	–	–
VC	4/15/2015	Field	No QC	Field	0.0 ppm	0.0 ppm	20.5%	0.0%	0.0 ppm	–	–	–	–
LS	4/14/2015	Field	No QC	Field	0.0 ppm	0.0 ppm	20.9%	0.0%	0.0 ppm	–	–	–	–
VC	4/14/2015	Field	No QC	Field	0.0 ppm	0.0 ppm	20.9%	0.0%	0.0 ppm	–	–	–	–
LS	4/11/2015	Field	No QC	Field	0.0 ppm	0.0 ppm	21.0%	0.0%	1.1 ppm	–	–	–	–
VC	4/11/2015	Field	No QC	Field	0.0 ppm	0.0 ppm	21.0%	0.0%	0.85 ppm	–	–	–	–
LS	4/2/2015	Field	No QC	Field	0.0 ppm	0.0 ppm	21.0%	0.0%	0.0 ppm	–	–	–	–
VC	4/2/2015	Field	No QC	Field	0.0 ppm	0.0 ppm	21.0%	0.0%	0.0 ppm	–	–	–	–
LS	2/13/2015	Field	No QC	Field	–	–	–	–	–	1.25 ppm	–	–	–
VC	2/13/2015	Field	No QC	Field	–	–	–	–	–	0.65 ppm	–	–	–
LS	2/13/2015	Field	No QC	Field	–	–	–	–	–	0.82 ppm	–	–	–
VC	2/13/2015	Field	No QC	Field	–	–	–	–	–	1.1 ppm	–	–	–
LS	2/13/2015	Field	No QC	Field	–	–	–	–	–	0.0 ppm	–	–	–
VC	2/13/2015	Field	No QC	Field	–	–	–	–	–	1.45 ppm	–	–	–
LS	2/12/2015	Field	No QC	Field	–	–	–	–	0.0 ppm	–	–	–	–
LS	2/11/2015	Field	No QC	Field	–	–	–	–	0.0 ppm	–	–	–	–

MSD 033148

Table 1
Bridgeton Landfill PS-1 Air Data

				Parameter	Carbon Monoxide	Hydrogen Sulfide	Oxygen	LEL (CH4)	Benzene	Total VOC	Dimethyl Sulfide	Ammonia	Methane (CH4)
				Action Level	> 25 ppm	> 10 ppm	< 19.5 %	> 10 %					
				ACGIH TLV-TWA (ppm)					0.5		10	25	
				ACGIH TLV-TWA (ug/m3)					1600		25000	17000	
Location	Date	Lab Name	Data Status	Lab Report Number									
CANISTER RESULTS													
LS3063	10/16/2015	Enthalpy Anal.	Validated	1015-70	--	--	--	--	1.32 ug/m3	--	86 ug/m3 TIC	--	5.73 j ppm
LS5685602990	10/16/2015	Enthalpy Anal.	Validated	1015-70	--	--	--	--	--	--	--	608 ug/m3	--
LS5685602994	10/16/2015	Enthalpy Anal.	Validated	1015-70	--	--	--	--	--	--	--	863 ug/m3	--
VC8199	10/16/2015	Enthalpy Anal.	Validated	1015-70	--	--	--	--	0.499 ug/m3	--	0.85 ug/m3 TIC	--	1.91 j ppm
VC5356301566	10/16/2015	Enthalpy Anal.	Validated	1015-70	--	--	--	--	--	--	--	< 4.90 ug/m3	--
VC5356301571	10/16/2015	Enthalpy Anal.	Validated	1015-70	--	--	--	--	--	--	--	< 4.90 ug/m3	--
LS1583	9/3/2015	Enthalpy Anal.	Validated	0715-211	--	--	--	--	9.97 ug/m3	--	194 ug/m3 TIC	--	57.7 ppm
LS5685602993	9/3/2015	Enthalpy Anal.	Validated	0715-211	--	--	--	--	--	--	--	131 ug/m3	--
LS5685602995	9/3/2015	Enthalpy Anal.	Validated	0715-211	--	--	--	--	--	--	--	5063 ug/m3	--
VC1446	9/3/2015	Enthalpy Anal.	Validated	0715-211	--	--	--	--	1.44 ug/m3	--	0.410 ug/m3 TIC	--	2.56 j ppm
VC5685602988	9/3/2015	Enthalpy Anal.	Validated	0715-211	--	--	--	--	--	--	--	7 j ug/m3	--
VC5685602991	9/3/2015	Enthalpy Anal.	Validated	0715-211	--	--	--	--	--	--	--	12 j ug/m3	--
LS10888	6/30/2015	Enthalpy Anal.	Validated	0615-39	--	--	--	--	859 ug/m3	--	5327 ug/m3 TIC	--	5728 ppm
LS5685603018	6/30/2015	Enthalpy Anal.	Validated	0615-39	--	--	--	--	--	--	--	6159 ug/m3	--
LS5685603024	6/30/2015	Enthalpy Anal.	Validated	0615-39	--	--	--	--	--	--	--	9518 ug/m3	--
VC3211	6/30/2015	Enthalpy Anal.	Validated	0615-39	--	--	--	--	47.8 ug/m3	--	30.6 ug/m3 TIC	--	8.70 j ppm
VC5685603023	6/30/2015	Enthalpy Anal.	Validated	0615-39	--	--	--	--	--	--	--	205 ug/m3	--
VC5685603026	6/30/2015	Enthalpy Anal.	Validated	0615-39	--	--	--	--	--	--	--	85 j ug/m3	--
LS 4038	5/28/2015	Enthalpy Anal.	Validated	0515-31	--	--	--	--	170 ug/m3	--	1044 ug/m3 TIC	--	308 ppm
LS5685603022	5/28/2015	Enthalpy Anal.	Validated	0515-31	--	--	--	--	--	--	--	11.7 jb ug/m3	--
LS5685603025	5/28/2015	Enthalpy Anal.	Validated	0515-31	--	--	--	--	--	--	--	424 j ug/m3	--
VC 3977	5/28/2015	Enthalpy Anal.	Validated	0515-31	--	--	--	--	6.57 ug/m3	--	22.4 ug/m3 TIC	--	1.94 j ppm
VC5685603017	5/28/2015	Enthalpy Anal.	Validated	0515-31	--	--	--	--	--	--	--	< 4.90 ug/m3	--
VC5685603019	5/28/2015	Enthalpy Anal.	Validated	0515-31	--	--	--	--	--	--	--	< 4.90 ug/m3	--
LS5356301860	4/29/2015	Enthalpy Anal.	Validated	0415-06	--	--	--	--	--	--	--	< 4.90 ug/m3	--
VC5356301660	4/29/2015	Enthalpy Anal.	Validated	0415-06	--	--	--	--	--	--	--	7.10 jb ug/m3	--
LS5356301661	4/29/2015	Enthalpy Anal.	Validated	0415-06	--	--	--	--	--	--	--	19.6 jb ug/m3	--
VC5356301862	4/29/2015	Enthalpy Anal.	Validated	0415-06	--	--	--	--	--	--	--	27.1 jb ug/m3	--
LS 4036	4/29/2015	Enthalpy Anal.	Validated	0415-06	--	--	--	--	525 ug/m3	--	2596 ug/m3 TIC	--	581 ppm
VC 4028	4/29/2015	Enthalpy Anal.	Validated	0415-06	--	--	--	--	338 ug/m3	--	253 ug/m3 TIC	--	90.4 ppm
LS 5356301856	3/27/2015	Enthalpy Anal.	Validated	0315-18	--	--	--	--	--	--	--	< 4.90 ug/m3	--
VC 5356301861	3/27/2015	Enthalpy Anal.	Validated	0315-18	--	--	--	--	--	--	--	< 4.90 ug/m3	--
LS 5356301858	3/27/2015	Enthalpy Anal.	Validated	0315-18	--	--	--	--	--	--	--	< 4.90 ug/m3	--
VC 5356301857	3/27/2015	Enthalpy Anal.	Validated	0315-18	--	--	--	--	--	--	--	< 4.90 ug/m3	--
VC 4014	3/27/2015	Enthalpy Anal.	Validated	0315-18	--	--	--	--	52.2 ug/m3	--	0.770 ug/m3 TIC	--	411 ppm
LS 4009	3/27/2015	Enthalpy Anal.	Validated	0315-18	--	--	--	--	72.9 ug/m3	--	1031 ug/m3 TIC	--	202 ppm
LS 1-2'	2/13/2015	Enthalpy Anal.	Validated	0215-55	--	--	--	--	22.6 ** ug/m3	--	ND ** TIC	--	--
VC 1-8'	2/13/2015	Enthalpy Anal.	Validated	0215-55	--	--	--	--	21.2 ug/m3	--	ND TIC	--	--

MSD 033149

Table 2
Ammonia Concentration Calculation

				Parameter	Ammonia (ug)	Ammonia (ug) Values	Sample rate (cc)	Sample time	Ammonia (ug/m3)
				Action Level					
				ACGIH TLV-TWA (ppm)					25
				ACGIH TLV-TWA (ug/m3)					17000
Location	**Date**	**Lab Name**	**Data Status**	**Lab Report Number**					
LS5685602990	10/16/2015	Enthalpy Anal.	Validated	1015-70	29.2 ug	29.2	800	60	608
LS5685602994	10/16/2015	Enthalpy Anal.	Validated	1015-70	41.4 ug	41.4	800	60	863
VC5356301566	10/16/2015	Enthalpy Anal.	Validated	1015-70	< 0.235 ug	0.235	800	60	4.9
VC5356301571	10/16/2015	Enthalpy Anal.	Validated	1015-70	< 0.235 ug	0.235	800	60	4.9
LS5685602995	9/3/2015	Enthalpy Anal.	Validated	0715-211	243 ug	243	800	60	5062.5
VC5685602991	9/3/2015	Enthalpy Anal.	Validated	0715-211	0.575 j ug	0.575	800	60	12.0
LS5685602993	9/3/2015	Enthalpy Anal.	Validated	0715-211	6.28 ug	6.28	800	60	130.8
VC5685602988	9/3/2015	Enthalpy Anal.	Validated	0715-211	0.324 j ug	0.324	800	60	6.8
LS5685603024	6/30/2015	Enthalpy Anal.	Validated	0615-39	221 ug	221	387	60	9517.7
VC5685603023	6/30/2015	Enthalpy Anal.	Validated	0615-39	4.75 ug	4.75	387	60	204.6
LS5685603018	6/30/2015	Enthalpy Anal.	Validated	0615-39	143 ug	143	387	60	6158.5
VC5685603026	6/30/2015	Enthalpy Anal.	Validated	0615-39	1.97j ug	1.97	387	60	84.8
LS5685603025	5/28/2015	Enthalpy Anal.	Validated	0515-31	20.3 ug j	20.3	800	60	422.9
VC5685603019	5/28/2015	Enthalpy Anal.	Validated	0515-31	< 0.235 ug	0.235	800	60	4.9
LS5685603022	5/28/2015	Enthalpy Anal.	Validated	0515-31	0.562 ug j	0.562	800	60	11.7
VC5685603017	5/28/2015	Enthalpy Anal.	Validated	0515-31	< 0.235 ug	0.235	800	60	4.9
LS5356301860	4/29/2015	Enthalpy Anal.	Validated	0415-06	< 0.235 ug	0.235	800	60	4.9
VC5356301660	4/29/2015	Enthalpy Anal.	Validated	0415-06	0.341 jb ug	0.341	800	60	7.1
LS5356301661	4/29/2015	Enthalpy Anal.	Validated	0415-06	0.940 jb ug	0.94	800	60	19.6
VC5356301862	4/29/2015	Enthalpy Anal.	Validated	0415-06	1.30 jb ug	1.3	800	60	27.1
LS 5356301856	3/27/2015	Enthalpy Anal.	Validated	0315-18	< 0.235 ug	0.235	800	60	4.9
VC 5356301861	3/27/2015	Enthalpy Anal.	Validated	0315-18	< 0.235 ug	0.235	800	60	4.9
LS 5356301858	3/27/2015	Enthalpy Anal.	Validated	0315-18	< 0.235 ug	0.235	800	60	4.9
VC 5356301857	3/27/2015	Enthalpy Anal.	Validated	0315-18	< 0.235 ug	0.235	800	60	4.9

Sample rate	cc/min	800	387
Sample time	min	60	60
Total volume	cc	48000	23220
Total volume	m^3	0.048	0.023

MSD 033150

Table 3
Dimethyl Sulfide Conversion

				Parameter	Dimethyl Sulfide		
				ACGIH TLV-TWA (ppm)	10		
				ACGIH TLV-TWA (ug/m3)	25000		
Location	**Date**	**Lab Name**	**Data Status**	**Lab Report Number**	**ppbv**	**ug/m3**	**Method**
LS3063	10/16/2015	Enthalpy Anal.	Validated	1015-70	34.1	86	TIC
VC8199	10/16/2015	Enthalpy Anal.	Validated	1015-70	0.336	0.85	TIC
LS1583	9/3/2015	Enthalpy Anal.	Validated	0715-211	76.7	194	TIC
VC1446	9/3/2015	Enthalpy Anal.	Validated	0715-211	0.162	0.41	TIC
LS10888	6/30/2015	Enthalpy Anal.	Validated	0615-39	2103	5327	TIC
VC3211	6/30/2015	Enthalpy Anal.	Validated	0615-39	12.1	30.6	TIC
VC 3977	5/28/2015	Enthalpy Anal.	Validated	0515-31	8.86	22.4	TIC
LS 4038	5/28/2015	Enthalpy Anal.	Validated	0515-31	412	1044	TIC
LS 4036	4/29/2015	Enthalpy Anal.	Validated	0415-06	1025	2596	TIC
VC 4028	4/29/2015	Enthalpy Anal.	Validated	0415-06	100	253	TIC
VC 4014	3/27/2015	Enthalpy Anal.	Validated	0315-18	0.304	0.77	TIC
LS 4009	3/27/2015	Enthalpy Anal.	Validated	0315-18	407	1031	TIC
LS 1-2'	2/13/2015	Enthalpy Anal.	Validated	0215-55		ND	TIC
VC 1-8'	2/13/2015	Enthalpy Anal.	Validated	0215-55		ND	TIC

ppbv = 2.533 ug/m3
molecular weight = 62.02

MSD 033151

Data Qualifiers/Footnotes	
Qualifier	**Definition**
--	Not analyzed/not available.
a	Estimated value, calculated using some or all values that are estimates.
b	Potential false positive value based on blank data validation procedures.
c	Coeluting compound.
e	Estimated value, exceeded the instrument calibration range.
f	Sample was collected at a flowrate exceeding the recommended rate of 200 mL/minute:
h	EPA recommended sample preservation, extraction or analysis holding time was exceeded.
i	Indeterminate value based on failure of blind duplicate data to meet quality assurance criteria.
j	Reported value is less than the stated laboratory quantitation limit and is considered an estimated value.
p	Relative percent difference is >40% (25% CLP pesticides) between primary and confirmation GC columns.
pp	Small peak in chromatogram below method detection limit.
r	The presence of the compound is suspect based on the ID criteria of the retention time and relative retention time obtained from the examination of the chromatograms.
s	Potential false positive value based on statistical analysis of blank sample data.
t	Sample positive for total coliforms but negative for *E. coli*.
v	Sample was collected under a vacuum of greater than XX inches of mercury.
*	Estimated value, QA/QC criteria not met.
**	Unusable value, QA/QC criteria not met.
N	Sample Type: Normal
FD	Sample Type: Field Duplicate
AT	Sample chromatogram is noted to be atypical of a petroleum product.
DLND	Not detected, detection limit not determined.
DF	Did not flash
EMPC	Estimated maximum possible concentration.
NA – (Not applicable)	NA indicates that a fractional portion of the sample is not part of the analytical testing or field collection procedures.
ND	Not detected.
TIC	Tentatively identified compound
BQA	Barr-applied project specific qualifier: extraction and/or analyses conducted using an alternative method and/or procedure.
BQC	Barr-applied project specific qualifier: plant shut down.
BQD	Barr-applied project specific qualifier: equipment malfunction.
BQE	Barr-applied project specific qualifier: equipment adjustment.
BQM	Barr-applied project specific qualifier: manual measurement.
BQN	Barr-applied project specific qualifier: unable to be sampled or measured due to various reasons.
BQP	Barr-applied project specific qualifier: atypical chromatographic pattern.
BQQ	Barr-applied project specific qualifier: some aspect of QA/QC was not met.
BQR	Barr-applied project specific qualifier: location was re-sampled.
BQS	Barr-applied project specific qualifier: data is considered suspect.
BQT	Barr-applied project specific qualifier: summed value not displayed due to insufficient field length.
BQU	Barr-applied project specific qualifier: historical qualifier - definition unknown.
BQV	Barr-applied project specific qualifier: estimated value.
BQX	Barr-applied project specific qualifier: see notes for qualifier definition.
BQZ	Barr-applied project specific qualifier: data is considered unusable.
Validated	Laboratory data has been evaluated following Barr QA/QC procedures and/or project-specific data review requirements. Field data has been verified for transcription errors, consistency and completeness. Data transferred from the previous database (9/2009) were categorized as validated, but may be comprised of any one of the following data status categories: Validated, SSource, No QC or Legacy.
No QC	Laboratory data has been excluded from Barr QA/QC procedures.
SSource	Laboratory and/or field data obtained from a secondary source external to Barr. Second source QA/QC evaluation procedures may or may not have been performed beyond the original data generator.
Legacy	Historical laboratory data (internal at Barr). QA/QC evaluation procedures may or may not have been performed beyond the original data generator

Barr Engineering Company
Jefferson City

1001 Diamond Ridge, Suite 1100
Jefferson City, MO 65109

Bridgeton Landfill
Bridgeton, MO

Client Project #25871014

Analytical Report
(1015-70)

NIOSH Method 6016-Type

Ammonia

EPA Method TO-15

Benzene, Dimethyl sulfide

EPA Method 18-Type

Methane

Enthalpy Analytical, Inc.

Phone: (919) 850 - 4392 / Fax: (919) 850 - 9012 / www.enthalpy.com
800-1 Capitola Drive Durham, NC 27713-4385

I certify that to the best of my knowledge all analytical data presented in this report:

- Have been checked for completeness
- Are accurate, error-free, and legible
- Have been conducted in accordance with approved protocol, and that all deviations and analytical problems are summarized in the appropriate narrative(s)

This analytical report was prepared in Portable Document Format (.PDF) and contains 209 pages.

Kristen H Bounds

QA Reviewed by – Kristen H. Bounds

Report Issued: 11/19/2015

Enthalpy Analytical

Company: Barr Engineering Company - Jefferson City

Job No.: 1015-70 NIOSH Method 6016-Type Analysis

Client No.: 25871014

Summary Table

Sample Name	Ammonia Catch Weight (ug)	
LS Tube 5685602990	29.2	
LS Tube 5685602994	41.4	
VC Tube 5356301566	0.235	ND
VC Tube 5356301571	0.235	ND

Enthalpy Analytical

Company: Barr Engineering Company - Jefferson City

Job No.: 1015-70 EPA Method 18-Type

Client No.: 25871014

Summary Table

Sample Name	LS Can 3063	VC Can 8199
Compound	Sample Conc (ppm)	Sample Conc (ppm)
Methane	5.73 J	1.91 J

Enthalpy Analytical

Company: Barr Engineering Company - Jefferson City

Job No.: 1015-70 NIOSH Method 6016-Type Analysis

Client No.: 25871014

Ammonia

Client's Sample Name	Filename #1	Filename #2	Analysis Method	Curve Min	Curve Max	MDL	Ret Time (min)	Ret Time (min)	%diff RT	Conc # 1 (ug/mL)	Conc # 2 (ug/mL)	%diff conc	Avg Conc (ug/mL)	DF	Liquid Vol (mL)	Catch Weight (ug)	Flag
LS Tube 5685602990 FH	022-0201.D	022-0202.D	Curly pg181.M	0.470	12.3	0.0235	4.26	4.26	0.0	2.92	2.93	0.1	2.92	1	10.0	29.2	
LS Tube 5685602990 BH	026-0601.D	026-0602.D	Curly pg181.M	0.470	12.3	0.0235	NA	NA	NA	0.0235	0.0235	0.0	0.0235	1	10.0	0.235	ND
																29.2	
LS Tube 5685602994 FH	021-0101.D	021-0102.D	Curly pg181.M	0.470	12.3	0.0235	4.26	4.26	0.0	4.13	4.15	0.3	4.14	1	10.0	41.4	
LS Tube 5685602994 BH	025-0501.D	025-0502.D	Curly pg181.M	0.470	12.3	0.0235	NA	NA	NA	0.0235	0.0235	0.0	0.0235	1	10.0	0.235	ND
																41.4	
VC Tube 5356301566 FH	023-0301.D	023-0302.D	Curly pg181.M	0.470	12.3	0.0235	NA	NA	NA	0.0235	0.0235	0.0	0.0235	1	10.0	0.235	ND
VC Tube 5356301566 BH	027-0701.D	027-0702.D	Curly pg181.M	0.470	12.3	0.0235	NA	NA	NA	0.0235	0.0235	0.0	0.0235	1	10.0	0.235	ND
																0.235	ND
VC Tube 5356301571 FH	024-0401.D	024-0402.D	Curly pg181.M	0.470	12.3	0.0235	NA	NA	NA	0.0235	0.0235	0.0	0.0235	1	10.0	0.235	ND
VC Tube 5356301571 BH	028-0801.D	028-0802.D	Curly pg181.M	0.470	12.3	0.0235	NA	NA	NA	0.0235	0.0235	0.0	0.0235	1	10.0	0.235	ND
																0.235	ND

Enthalpy Analytical

Company: Barr Engineering Company - Jefferson City

Job No.: 1015-70 NIOSH Method 6016-Type Analysis

Client No.: 25871014

Matrix Spike Recovery

Sample Name	Compound	Filename #1	Filename #2	Analysis Method	Ret Time (min)	Ret Time (min)	%diff RT	Conc # 1 (ug/mL)	Conc # 2 (ug/mL)	%diff conc	Avg Conc (ug/mL)	Flag	DF	vol mL	Mass (ug)	Recov %
MS / LS Tube 5685602990 FH	Ammonia	029-0901.D	029-0902.D	Curly pg181.M	4.26	4.26	0.0	6.74	6.79	0.4	6.77		1	0.520	3.52	
LS Tube 5685602990 FH	Ammonia	022-0201.D	022-0202.D	Curly pg181.M	4.26	4.26	0.0	2.92	2.93	0.1	2.92		1	0.500	1.46	
													Mass Spiked:		1.89	109
MSD / LS Tube 5685602990 FH	Ammonia	030-1001.D	030-1002.D	Curly pg181.M	4.26	4.26	0.0	6.49	6.47	0.2	6.48		1	0.520	3.37	
LS Tube 5685602990 FH	Ammonia	022-0201.D	022-0202.D	Curly pg181.M	4.26	4.26	0.0	2.92	2.93	0.1	2.92		1	0.500	1.46	
													Mass Spiked:		1.89	101

Sample Name	: VC8199
Sample Info	: 1015-70; 500mL load
Data File	: L1504753.D
Dilution	: 1
Pressurization Factor	: 2.460
Acquisition Date	: 2015-10-22 19:37:00
Instrument Method	: MM624-L
Matrix	: AIR

Target Compound	Concentration (PPBV)	RL (PPBV)	MDL (PPBV)	Concentration (ug/m3)	RL (ug/m3)	MDL (ug/m3)	Flag *
Benzene	0.156	0.101	0.0861	0.499	0.324	0.275	

Internal Standards	Response	Retention Time (min)	Concentration (PPBV)	Flag *
1,4-Difluorobenzene (IS)	2,389,007	14.11	9.50	PASS

(ND) = Not Detected
*** (J) = Below Calibration Range, (E) = Above Calibration Range, (m) = Manual Integration**
IS Acceptance Criteria: RT +/- 20 sec, Response +/- 40%

Sample Name	: LS3063
Sample Info	: 1015-70; *2=250mL load
Data File	: L1504754.D
Dilution	: 2
Pressurization Factor	: 2.449
Acquisition Date	: 2015-10-22 20:15:00
Instrument Method	: MM624-L
Matrix	: AIR

Target Compound	Concentration (PPBV)	RL (PPBV)	MDL (PPBV)	Concentration (ug/m3)	RL (ug/m3)	MDL (ug/m3)	Flag *
Benzene	0.412	0.202	0.171	1.32	0.645	0.548	m

Internal Standards	Response	Retention Time (min)	Concentration (PPBV)	Flag *
1,4-Difluorobenzene (IS)	2,396,507	14.11	9.50	PASS

(ND) = Not Detected
*** (J) = Below Calibration Range, (E) = Above Calibration Range, (m) = Manual Integration**
IS Acceptance Criteria: RT +/- 20 sec, Response +/- 40%

Company	Barr Engineering Company
Analyst	TDD
Parameters	EPA Method TO15 - TICs

Client #	Bridgeton Landfill: Bridgeton, MO
Job #	1015-70
# Samples	2 Canisters

Sample ID: **VC8199**
Data File: L1504753.D
Tank/Misc ID: 1015-70; Can #8199; 500mL load

DF: 1.00
Tank DF: 2.460

Compound	CAS#	MW	Ret. Time (min)	Area	Conc. (ppbv)	Sample Conc. (ppbv)
Dimethyl sulfide	000075-18-3	62.0	8.13	11,853	0.137	0.336

Company	Barr Engineering Company
Analyst	TDD
Parameters	EPA Method TO15 - TICs

Client #	Bridgeton Landfill: Bridgeton, MO
Job #	1015-70
# Samples	2 Canisters

Sample ID: **LS3063**
Data File: L1504754.D
Tank/Misc ID: 1015-70; Can #1449; *2=250mL load

DF: 2.00
Tank DF: 2.449

Compound	CAS#	MW	Ret. Time (min)	Area	Conc. (ppbv)	Sample Conc. (ppbv)
Dimethyl sulfide	000075-18-3	62.0	8.14	583,853	6.96	34.1

Sample Name	: LS3063 LD
Sample Info	: 1015-70; Can #1449; *2=250mL load
Data File	: L1504755.D
Dilution	: 2
Pressurization Factor	: 2.449
Acquisition Date	: 2015-10-22 20:55:00
Instrument Method	: MM624-L
Matrix	: AIR

Target Compound	Concentration (PPBV)	RL (PPBV)	MDL (PPBV)	Concentration (ug/m3)	RL (ug/m3)	MDL (ug/m3)	% Diff	Flag *
Benzene	0.418	0.202	0.171	1.34	0.645	0.548	1.6	

Internal Standards	Response	Retention Time (min)	Concentration (PPBV)	Flag *
1,4-Difluorobenzene (IS)	2,448,161	14.11	9.50	PASS

(ND) = Not Detected
*** (J) = Below Calibration Range, (E) = Above Calibration Range, (m) = Manual Integration**
IS Acceptance Criteria: RT +/- 20 sec, Response +/- 40%

Sample Name	: Humid Blank
Sample Info	: Can #10893; 500mL load
Data File	: L1504744.D
Dilution	: 1
Pressurization Factor	: 1.000
Acquisition Date	: 2015-10-22 13:08:00
Instrument Method	: MM624-L
Matrix	: AIR

Target Compound	Concentration (PPBV)	RL (PPBV)	MDL (PPBV)	Concentration (ug/m3)	RL (ug/m3)	MDL (ug/m3)	Flag *
Benzene	ND	0.0412	0.0350	ND	0.132	0.112	

Internal Standards	Response	Retention Time (min)	Concentration (PPBV)	Flag *
1,4-Difluorobenzene (IS)	2,474,128	14.11	9.50	PASS

(ND) = Not Detected
*** (J) = Below Calibration Range, (E) = Above Calibration Range, (m) = Manual Integration**
IS Acceptance Criteria: RT +/- 20 sec, Response +/- 40%

Sample Name	: 5ppbv TO15 LCS
Sample Info	: 50mL load
Data File	: L1504743.D
Dilution	: 1
Pressurization Factor	: 1.000
Acquisition Date	: 2015-10-22 12:24:00
Instrument Method	: MM624-L
Matrix	: AIR

Target Compound	Concentration (PPBV)	RL (PPBV)	MDL (PPBV)	Concentration (ug/m3)	RL (ug/m3)	MDL (ug/m3)	Flag *
Benzene	5.42	0.0412	0.0350	17.3	0.132	0.112	

Internal Standards	Response	Retention Time (min)	Concentration (PPBV)	Flag *
1,4-Difluorobenzene (IS)	2,569,145	14.11	9.50	PASS

(ND) = Not Detected
*** (J) = Below Calibration Range, (E) = Above Calibration Range, (m) = Manual Integration**
IS Acceptance Criteria: RT +/- 20 sec, Response +/- 40%

Sample Name	: 5ppbv TO15 LCS
Sample Info	: 50mL load
Data File	: L1504743.D
Dilution	: 1
Pressurization Factor	: 1.000
Acquisition Date	: 2015-10-22 12:24:00
Instrument Method	: MM624-L
Matrix	: AIR

Target Compound	Response	Concentration (PPBV)	Tag Value (PPBV)	% Recovery	Flag
Benzene	757,848	5.42	5.25	103.3	PASS

Company	Barr Engineering Company
Analyst	TDD
Parameters	EPA Method TO15 - TICs

Client #	Bridgeton Landfill: Bridgeton, MO
Job #	1015-70
# Samples	2 Canisters

Sample ID: **Humid Blank**
Data File: L1504744.D
Tank/Misc ID: Can #10893, 500mL load

DF: 1.00
Tank DF: 1.00

Compound	CAS#	MW	Ret. Time (min)	Area	Conc. (ppbv)	Sample Conc. (ppbv)
Dimethyl sulfide	75-18-2	62	NA	NA	ND	ND

Enthalpy Analytical

Company: Barr Engineering Company - Jefferson City

Job No.: 1015-70 EPA Method 18-Type

Client No.: 25871014

Methane

Sample ID	Filename #1	Filename #2	Filename #3	Analysis Method	Curve Min	Curve Max	MDL	Ret Time (min)	Ret Time (min)	Ret Time (min)	%dif RT	DF	Conc #1 (ppm)	Conc #2 (ppm)	Conc #3 (ppm)	%dif conc	Avg Conc (ppm)	Final Conc (ppm)	Flag
LS Can 3063	004F0301.D	004F0302.D	004F0303.D	EDITHP352F_C1-C7_EO.M	5.10	51,200	0.501	1.53	1.53	1.53	0.0	2.449	2.39	2.32	2.32	2.0	2.34	5.73	J
VC Can 8199	006F0201.D	006F0202.D	006F0203.D	EDITHP352F_C1-C7_EO.M	5.10	51,200	0.501	1.54	1.54	1.54	0.0	2.460	0.825	0.767	0.738	6.2	0.776	1.91	J

MSD 033168

Canister and Controller Data Sheet

Enthalpy Analytical Inc.

Client Name: BARR
Client #: 25871014; Bridgeton Landfill: Bridgeton, MO
Enthalpy Job #: 1015-70

Controller Data

Controller ID	Data File	Initial Flow (cc/min)	Return Flow (cc/min)	
SB-01876	L1504041	10.6	10.6	Returned Unused
SB-01600	L1503558	10.6	13.6	
SB-01348	L1503523	10.6	13.0	
SB-03541	L1504328	10.6	10.6	Returned Unused

Canister Data

Canister ID	Data File	Canister Pressure Pre-Sample (mm-Hg)	Canister Pressure Post-Sample (mmHg)	Canister Pressure Final (mmHg)	Canister Pressurization Factor
1449	L1503576	-765	-84	905	2.449
8199	L1503578	-765	-89	900	2.460

Date Prepared: 10/9/15
Date Received: 10/21/15

Prepared By: BLC
Received By: PRM

Canister Certification Type: **Individual** **Batch**

1015-70 CanContrDataSheet V5 (completed).xls

Enthalpy Analytical Narrative Summary

Company	Barr Engineering Company
Analyst	LAH
Parameters	NIOSH Method 6016-Type

Client #	25871014
Job #	1015-70
# Samples	4 Runs

Custody	Patricia Mann of Enthalpy Analytical, Inc. received the samples on 10/21/15 at ambient temperature after being relinquished by Barr Engineering Company of Jefferson City, MO. The samples were received in good condition. Prior to, during, and after analysis, the samples were kept under lock with access only to authorized personnel by Enthalpy Analytical, Inc.
Analysis	The samples were analyzed for ammonia using the general analytical procedures in NIOSH Method 6016, Ammonia by Ion Chromatography. Each sample train consisted of a single silica gel sample tube. Each tube was divided into front half (FH) and back half (BH) fractions and each fraction was desorbed using 10 mL of deionized water and shaken at 450 rev/min for 30 minutes. The Agilent Model 1100, High Performance Liquid Chromatograph "Curly" was used for these analyses.
Calibration	The calibration curve is included in the Raw Data section of this report. The data analysis method is referenced in the Analysis Method column on the Detailed Results page. The first page of the curve contains all method specific parameters (i.e., curve type, origin, weight, etc.) used to quantify the samples. The calibration curve section also includes a table with the Retention Time (RetTime), Level (Lvl), Amount (corresponding units), Area, Response Factor (Amt/Area) and the analyte Name. The calibration table is used to identify (by retention time) and quantify each target compound.
Chromatographic Conditions	The acquisition method (ENV_AMM_18MM_DIUF_new.M) is included in the Raw Data section of this report.
QC Notes	The analysis of the laboratory reagent blank showed ammonia at a concentration greater than the detection limit, but below the LOQ. Duplicate matrix spikes were prepared using aliquots of sample ***LS Tube 5685602990 FH.*** The matrix spikes exhibited spike recovery values of 101% and 109%.
Reporting Notes	The results presented in this report are representative of the samples as provided to the laboratory.

Enthalpy Analytical Narrative Summary

Company	Barr Engineering Company
Analyst	TDD
Parameters	EPA Method TO-15

Client #	25871014
Job #	1015-70
# Samples	2 Canisters

Custody

Patricia Mann received the samples on 10/21/15 after being relinquished by Barr Engineering Company - Jefferson City. The samples were received at ambient temperature and in good condition. Prior to, during, and after analysis, the samples were kept under lock with access only to authorized personnel by Enthalpy Analytical, Inc.

Analysis

The samples were analyzed for benzene as a target compound and for dimethyl sulfide as a Tentatively Identified Compound (TIC) using the analytical procedures in EPA Method TO-15, *Determination of Volatile Organic Compounds (VOCs) In Air Collected In Specially-Prepared Canisters And Analyzed by Gas Chromatography/Mass Spectrometry (GC/MS).*

Upon receipt, the canister pressures were measured and recorded. The cans were then pressurized and a dilution ratio was calculated for each can (see Canister and Controller Data Sheet).

The Hewlett Packard Model 5890, Gas Chromatograph "Lurch" (S/N 2750A15233) was equipped with a 5971A Mass Selective Detector and a Restek Rxi-624 Sil MS, 60 m x 0.32 mm x 1.8 µm (S/N 1035491) capillary column for these analyses. Both samples and the standards were introduced directly to the analyzer using an Entech 7100A Preconcentrator.

Calibration

The Initial Calibration (***L071815A-TO15***) met 30% RSD criteria. The Initial Calibration Verification met 30% Recovery criteria. The Continuing Calibration Verification met 30% Difference criteria. The calibration data has been included in the Raw Data section of this report.

Chromatographic Conditions

The acquisition method ***MM624-L.M*** has been included in the Raw Data section of this report.

QC Notes

The associated BFB sample met tune criteria for this analysis.

All Internal Standard response and retention time criteria were met.

The Laboratory Control Sample met 30% Recovery criteria.

Neither benzene nor dimethyl sulfide was present in the analysis of the laboratory Humid Blank at a concentration greater than the MDL.

Enthalpy Analytical Narrative Summary
(continued)

QC Notes (continued)	All samples were analyzed within the 30-day holding time specified in the method.
Reporting Notes	The samples were manually searched for the presence of dimethyl sulfide using the primary and secondary ions, 62 and 47. Sample concentrations for dimethyl sulfide were calculated using the response of the extracted primary ion, and a default response factor of 1 (standard for TICs). These analyses met the requirements of the TNI Standard. Any deviations from the requirements of the reference method or TNI Standard have been stated above. The results presented in this report are representative of the samples as provided to the laboratory. The GC/MS analyses associated with this data report were performed at 2202 Ellis Road, Durham, NC 27703.

Enthalpy Analytical Narrative Summary

Company	Barr Engineering Company
Analyst	JKG
Parameters	EPA Method 18-Type

Client #	25871014
Job #	1015-70
# Samples	2 Canisters

Custody	Patricia Mann of Enthalpy Analytical, Inc. received the samples on 10/21/15 at ambient temperature after being relinquished by Barr Engineering Company of Jefferson City, MO. The samples were received in good condition. Prior to, during, and after analysis, the samples were kept under lock with access only to authorized personnel by Enthalpy Analytical, Inc.
Analysis	The samples were analyzed for methane using the general analytical procedures in EPA Method 18, Measurement of Gaseous Organic Compound Emissions by Gas Chromatography (40 CFR Part 60, Appendix A). All samples and standards were introduced directly to the column using an automated multi-port Valco gas sampling valve equipped with a stainless steel loop. Methane was referenced to certified gas phase standards. Upon receipt, the canister pressures were measured and recorded. The cans were then pressurized and a dilution ratio was calculated for each can (see Canister and Controller Data Sheet). The Agilent Technologies Model 7890, Gas Chromatograph "Edith" was used for these analyses.
Calibration	The calibration curve is included in the Raw Data section of this report. The data analysis method is and referenced in the Analysis Method column on the Detailed Results page. For each calibration curve used, the first page of the curve contains all method specific parameters (i.e., curve type, origin, weight, etc.) used to quantify the samples. The calibration curve section also includes a table with the Retention Time (RetTime), Level (Lvl), Amount (corresponding units), Area, Response Factor (Amt/Area) and the analyte Name. The calibration table is used to identify (by retention time) and quantify each target compound.
Chromatographic Conditions	The acquisition methods (AQ_EDITHP274_HRVOC_SHORT, AQ_EDITHP274_HRVOC and AQ_EDITHP274_HRVOC_XLONG) are included in the Raw Data section of this report.

Enthalpy Analytical Narrative Summary
(continued)

QC Notes	The analysis of the laboratory zero air blank did not contain methane at a concentration greater than the detection limit.
Reporting Notes	The results presented in this report are representative of the samples as provided to the laboratory.

General Reporting Notes

The following are general reporting notes that are applicable to all Enthalpy Analytical, Inc. data reports, unless specifically noted otherwise.

- Any analysis which refers to the method as ***"Type"*** represents a planned deviation from the reference method. For instance a Hydrogen Sulfide assay from a Tedlar bag would be labeled as "EPA Method 16-Type" because Tedlar bags are not mentioned as one of the collection options in EPA Method 16.
- The acronym ***MDL*** represents the Minimum Detection Limit. Below this value the laboratory cannot determine the presence of the analyte of interest reliably.
- The acronym ***LOQ*** represents the Limit of Quantification. Below this value the laboratory cannot quantitate the analyte of interest within the criteria of the method.
- The acronym ***ND*** following a value indicates a non-detect or analytical result below the MDL.
- The letter ***J*** in the Qualifier or Flag column in the results indicates that the value is between the MDL and the LOQ. The laboratory can positively identify the analyte of interest as present, but the value should be considered an estimate.
- The letter ***E*** in the Qualifier or Flag column indicates an analytical result exceeding 100% of the highest calibration point. The associated value should be considered as an estimate.
- The acronym ***DF*** represents Dilution Factor. This number represents dilution of the sample during the preparation and/or analysis process. The analytical result taken from a laboratory instrument is multiplied by the DF to determine the final undiluted sample results.
- The addition of ***MS*** to the Sample ID represents a Matrix Spike. An aliquot of an actual sample is spiked with a known amount of analyte so that a percent recovery value can be determined. The MS analysis indicates what effect the sample matrix may have on the target analyte, i.e. whether or not anything in the sample matrix interferes with the analysis of the analyte(s).
- The addition of ***MSD*** to the Sample ID represents a Matrix Spike Duplicate. Prepared in the same manner as a MS, the use of duplicate matrix spikes allows further confirmation of laboratory quality by showing the consistency of results gained by performing the same steps multiple times.
- The addition of ***LD*** to the Sample ID represents a Laboratory Duplicate. The analyst prepares an additional aliquot of sample for testing and the results of the duplicate analysis are compared to the initial result. The result should have a difference value of within 10% of the initial result (if the results of the original analysis are greater than the LOQ).
- The addition of ***AD*** to the Sample ID represents an Alternate Dilution. The analyst prepares an additional aliquot at a different dilution factor (usually double the initial factor). This analysis helps confirm that no additional compound is present and coeluting or sharing absorbance with the analyte of interest, as they would have a different response/absorbance than the analyte of interest.

General Reporting Notes

(continued)

- The Sample ID ***LCS*** represents a Laboratory Control Sample. Clean matrix, similar to the client sample matrix, prepared and analyzed by the laboratory using the same reagents, spiking standards and procedures used for the client samples. The LCS is used to assess the control of the laboratory's analytical system. Whenever spikes are prepared for our client projects, two spikes are retained as LCSs. The LCSs are labeled with the associated project number and kept in-house at the appropriate temperature conditions. When the project samples are received for analysis, the LCSs are analyzed to confirm that the analyte could be recovered from the media, separate from the samples which were used on the project and which may have been affected by source matrix, sample collection and/or sample transport.
- **Significant Figures**: Where the reported value is much greater than unity (1.00) in the units expressed, the number is rounded to a whole number of units, rather than to 3 significant figures. For example, a value of 10,456.45 ug catch is rounded to 10,456 ug. There are five significant digits displayed, but no confidence should be placed on more than two significant digits.
- **Manual Integration**: The data systems used for processing will flag manually integrated peaks with an "M". There are several reasons a peak may be manually integrated. These reasons will be identified by the following two letter designations on sample chromatograms, if provided in the report. The peak was ***not integrated*** by the software **"NI"**, the peak was ***integrated incorrectly*** by the software **"II"** or the ***wrong peak*** was integrated by the software **"WP"**. These codes will accompany the analyst's manual integration stamp placed next to the compound name on the chromatogram.

ENTHALPY analytical, inc.

Chain of Custody Record

Page 1 of 1

Special Handling:
- ☑ Standard Turn Around Time (10 business days)
- ☐ Rush Turn Around Time – Date Needed_____
- All TATs Subject to Approval by Enthalpy Analytical, Inc.
- All Bag/Can Samples Disposed of 1 Month from Receipt.
- All Other Samples Disposed of 4 Months from Receipt.

Client Name: Barr Engineering Co.
Project Manager: Ed Galbraith
Report To: Ed Galbraith

Project Number: 25871014
Site Name: Bridgeton Landfill
Location: Bridgeton, MO

PO#:
Telephone#: (573) 638-5024
Email: egalbraith@barr.com

For spiked or duplicate samples: please provide sample volumes for recovery calculations. For Particulates: please provide tare weights and/or condensed water volumes.

Special Instructions:

A=Air 1=H2SO4 2=NaOH W=Water O=Other
X=XAD C=Charcoal SG=Silica Gel
G=Grab C=Composite Q=Quality Control O=Other

Sample ID	Date	Time	Sample Volume	Type	Matrix	# of VOA Vials	# of Glass	# of Plastic	# of Bags	# of Canisters	# of Tubes	# Other	Ammonia								Notes:
LS5685602994	10/16/15	1223	48 L	G	SG						1		X								60 min test at 800 mL/min
LS5685602990	↓	1412	↓	G	SG						1		X								↓
VC5356301566		1223		G	SG						1		X								
VC5356301571		1412		G	SG						1		X								

Relinquished By:	Date:	Received By:	Date:	Time:	Sample Condition Upon Receipt:
Ethan Voyles (Barr Eng.)	10/19	PATRICIA MANN	10/21/15	1000 AM	☐ Iced ☒ Ambient ☐ °C_____
					☐ Iced ☐ Ambient ☐ °C_____
					☐ Iced ☐ Ambient ☐ °C_____

800-1 Capitola Drive • Durham, NC 27713 • (919) 850-4392 • FAX (919) 850-9012 • www.enthalpy.com

ENTHALPY analytical, inc.

Chain of Custody Record

Page 1 of 1

Special Handling:
- ☑ Standard Turn Around Time (10 business days)
- ☐ Rush Turn Around Time -- Date Needed_____
- All TATs Subject to Approval by Enthalpy Analytical, Inc.
- All Bag/Can Samples Disposed of 1 Month from Receipt.
- All Other Samples Disposed of 4 Months from Receipt.

Client Name: Barr Engineering Co.
Project Manager: Ed Galbraith
Report To: Ed Galbraith

Project Number: 25871014
Site Name: Bridgeton Landfill
Location: Bridgeton, MO

PO#:
Telephone#: (573) 638-5024
Email: egalbraith@barr.com

For spiked or duplicate samples: please provide sample volumes for recovery calculations. For Particulates: please provide tare weights and/or condensed water volumes.

Special Instructions:

A=Air 1=H2SO4 2=NaOH W=Water O=Other
X=XAD C=Charcoal SG=Silica Gel
G=Grab C=Composite Q=Quality Control O=Other

Sample ID	Date	Time	Sample Volume	Type	Matrix	# of VOA Vials	# of Glass	# of Plastic	# of Bags	# of Canisters	# of Tubes	# of Other	Benzene	Dimethylsulfide	Ammonia	Methane					Notes:
LS3063	10/16/15	0910-1630	6L	G	A					1			X	X	X	X					Test ended early for both
VC8199	10/16/15	0915-1430	6L	G	A					1			X	X	X	X					

Relinquished By:	Date:	Received By:	Date:	Time:	Sample Condition Upon Receipt:
Ethan Voyles (Barr Eng.)	10/19/15	PATRICIA MANN	10/21/15	1000 AM	☐ Iced ☒ Ambient ☐ °C_____
					☐ Iced ☐ Ambient ☐ °C_____
					☐ Iced ☐ Ambient ☐ °C_____

800-1 Capitola Drive • Durham, NC 27713 • (919) 850-4392 • FAX (919) 850-9012 • www.enthalpy.com

Doug Mendoza

From: Ed Galbraith <EGalbraith@barr.com>
Sent: Wednesday, December 09, 2015 11:47 AM
To: Doug Mendoza; John Lodderhose; Brian G. Gibson; Michael Grace; Nora C. Estopare; Rob G Daly; 'Tippett Mosby, Leanne (Leanne.TippettMosby@dnr.mo.gov)'; 'Aaron Schmidt'; 'Nagel, Chris (Christopher.Nagel@dnr.mo.gov)'; 'bpower@republicservices.com'; 'Getting, James'; 'Bouchard, Derek (DBouchard@republicservices.com)'; 'Kamp, Kevin'; 'LaFata, Natalie'; 'Cooper, Ivan (icooper@cecinc.com)'; 'lwright@cecinc.com'; Kelly Caddy; Dana B. Pasi; Christopher J. Bulmahn; Ken Gambaro; Mike Townley; 'lwright@cecinc.com'; Andrea A. Nord; Becca Coyle; 'koleary@cecinc.com'; 'sgraves@cecinc.com'; 'awyatt@herstassociates.com'; Fanning, Erin
Subject: Bridgeton Landfill Monthly Report 12/9/2015

CB 12-10

The monthly report including all 013 and 014 sampling and discharge through last week is now posted to the Barr ftp site. This is the final report that Barr will submit on behalf of Bridgeton Landfill. The ftp site will remain active for the remainder of 2015.

Column "V" of tab "013" in the main spreadsheet (BLF LPTP and Leachate Sampling_12082015) contains potable water flow. Please note that potable water data for 11/2 – 11/9 were not included in the November report due to a communication error. Please make a note to correct any previous calculations based on the previous report. We apologize for any inconvenience.

The TSS result for the sample taken 11/10/2015 (Pace Report 60207128) was qualified by the lab because the RPD of the sample duplicate exceeded the maximum. However Barr did not qualify the data and we believe that the reported result is usable for several reasons.

1. The higher, more conservative result of 16 mg/l is the reported number.
2. The deviation from the RPD standard itself is minor, 13% vs 10%.
3. The two results (16 and 14 mg/l respectively) are relatively close to the reporting limit of 5 mg/l; this exaggerates the difference in results in the calculated RPD and so the variation is not as consequential.

For these reasons, we have no cause to consider the 16 mg/l result invalid.

All permit limits have been met for the previous six monthly reports. Per permit Special Condition B.3, sampling and reporting should now move to quarterly using the supplemental forms. The quarterly form for 4Q 2015 will still be due January 28, 2016.

Also, per Special Conditions D.2 and D.3, discharge volume will continue to be reported monthly.

The FTP site can be accessed as follows:

Copy this link and paste it into Windows Explorer (NOT Internet Explorer) ftp://ftp.barr.com/bridgetonlandfill/2015%20Reports/
User: blfdata
Password: tran$fer!

Ed Galbraith

Senior Environmental Consultant
Jefferson City office: 573.638.5024
cell: 573.418.5562

Table 1
RadChem Data

Location	013				014			
Date	11/03/2015				11/03/2015			
lab_name_code	Eberline	Eberline	Eberline	Eberline	Eberline	Eberline	Eberline	Eberline
Sample Type	DO	DO	DUP	DUP	DO	DO	DUP	DUP
Data Status	Validated	Validated	Validated	Validated	Validated	Validated	Validated	Validated
lab_sdg	15-11021-OR	15-11021-OR	15-11021-OR	15-11021-OR	15-11021-OR	15-11021-OR	15-11021-OR	15-11021-OR
Parameter								
General Parameters								
Solids, total dissolved	10900 mg/l		--		11100 mg/l		--	
Solids, total suspended	570 mg/l		--		17000 mg/l		--	
Radiochemical Parameters								
Actinium-228	-4.26 +/- 39.1 pCi/l	55.4 pCi/l	--		15.4 +/- 32.2 pCi/l	62.3 pCi/l	-7.12 +/- 45.5 pCi/l	69.8 pCi/l
Bismuth 212	41.2 +/- 68.9 pCi/l	117 pCi/l	--		97.0 +/- 97.1 pCi/l	158 pCi/l	47.7 +/- 91.2 pCi/l	157 pCi/l
Bismuth 214	23.4 +/- 23.0 pCi/l	38.3 pCi/l	--		9.73 +/- 24.1 pCi/l	39.6 pCi/l	17.0 +/- 27.1 pCi/l	45.1 pCi/l
Gross Alpha (radiation)	-32.7 +/- 42.1 pCi/l	114 pCi/l	--		13.4 +/- 29.1 pCi/l	64.3 pCi/l	27.3 +/- 37.9 pCi/l	77.1 pCi/l
Gross Beta (radiation)	166 +/- 77.5 pCi/l	141 pCi/l	--		212 +/- 69.1 pCi/l	109 pCi/l	136 +/- 68.2 pCi/l	125 pCi/l
Gross Gamma	319 +/- 159 pCi/l	229 pCi/l	--		391 +/- 159 pCi/l	360 pCi/l	242 +/- 177 pCi/l	338 pCi/l
Lead 212	-1.48 +/- 17.4 pCi/l	22.3 pCi/l	--		8.19 +/- 18.5 pCi/l	28.8 pCi/l	13.2 +/- 17.9 pCi/l	28.6 pCi/l
Lead 214	2.93 +/- 20.7 pCi/l	27.6 pCi/l	--		-3.33 +/- 23.6 pCi/l	35.3 pCi/l	-11.8 +/- 24.5 pCi/l	35.1 pCi/l
Potassium 40	319 +/- 159 pCi/l	229 pCi/l	--		391 +/- 159 pCi/l	360 pCi/l	242 +/- 177 pCi/l	338 pCi/l
Radium 226	0.102 +/- 0.222 pCi/l	0.437 pCi/l	0.294 +/- 0.324 pCi/l	0.384 pCi/l	0.249 +/- 0.305 pCi/l	0.367 pCi/l	--	
Radium 228	0.502 +/- 0.772 pCi/l	1.58 pCi/l	0.555 +/- 0.776 pCi/l	1.58 pCi/l	-0.0734 +/- 0.859 pCi/l	1.85 pCi/l	--	
Thallium 208	32.2 +/- 25.6 pCi/l	45.6 pCi/l	--		39.5 +/- 28.5 pCi/l	54.6 pCi/l	58.9 +/- 34.3 pCi/l	65.1 pCi/l
Thorium 234	220 +/- 112 pCi/l (3)	198 pCi/l	--		402 +/- 401 pCi/l	669 pCi/l	346 +/- 262 pCi/l	363 pCi/l
Uranium total	-0.643 +/- 0.0750 ug/l	1.04 ug/l	--		-0.338 +/- 0.0393 ug/l	1.04 ug/l	-0.473 +/- 0.0549 ug/l	1.04 ug/l
Uranium 234 (2)	0.521 +/- 0.482 pCi/l	0.450 pCi/l	0.424 +/- 0.469 pCi/l	0.635 pCi/l	0.508 +/- 0.380 pCi/l	0.381 pCi/l	--	
Uranium 235 (1)	48.2 +/- 54.7 pCi/l	76.4 pCi/l	--		-33.4 +/- 49.6 pCi/l	76.8 pCi/l	-12.5 +/- 49.1 pCi/l	79.4 pCi/l
Uranium 235 (2)	-0.0226 +/- 0.265 pCi/l	0.555 pCi/l	0.239 +/- 0.367 pCi/l	0.545 pCi/l	0.0784 +/- 0.218 pCi/l	0.470 pCi/l	--	
Uranium 238 (2)	0.500 +/- 0.481 pCi/l	0.513 pCi/l	0.193 +/- 0.296 pCi/l	0.440 pCi/l	0.190 +/- 0.249 pCi/l	0.379 pCi/l	--	
Uranium Natural	0.521 +/- 0.482 pCi/l	0.450 pCi/l	<MDA		0.508 +/- 0.380 pCi/l	0.381 pCi/l	<MDA	

Note: All data in this table are taken from radiochemistry analytical reports with accompanying written narratives that are an integral part of the entire data package. Written narratives contain important information regarding the quality and usability of the data. No interpretation, conclusion or decision should be made based solely on the data tables apart from the entire report package. The laboratory name and report number are included at the top of each column. Report packages are posted at:

ftp://ftp.barr.com/bridgetonlandfill/2015%20Reports/
User: blfdata
Password: tran$fer!

(1) Uranium 235 by gamma spectroscopy Method EPA 901.1.
(2) Uranium 234, 235 and 238 by isotopic analysis EML U-02.
(3) Per analytical lab, not a true positive result and excluded from summation. See full laboratory report.

MSD 033180

Chain of Custody Record

№ 7275

Eberline Services
601 Scarboro Road
Oak Ridge, TN 37830
(865) 481-0683 Phone • (865) 483-4621 Fax

EBERLINE SERVICES

Page 1 of 1

15-11021

REC'D NOV 04 2015

Purchase Order #:

Project Name: Bridgeton 4Q15 Leachate	Project Number:
Send Report To: Bridgeton Landfill	Sampler (Print Name): Jon Wilkinson
Address:	Sampler (Print Name):
	Shipment Method: Fed Ex
	Airbill Number: 7748 9006 5785
Phone:	Laboratory Receiving:
Fax:	

Analysis Requested

Field Sample ID	Sample Date	Sample Time	Sample Matrix	Number of Containers	Gross Alpha	Gross Beta	Gross Gamma (incl Bi-212 + U-235)	Radium-226	Radium-228	Total Uranium by KPA	Uranium-234, -235 + -238	Total Dissolved Solids	Total Suspended Solids			Comments, Special Instructions, etc.	Lab Sample ID (to be completed by lab)
014 4	11/2-11/3/15	1120, 1505 0915, 1115	Aq.	4	X	X	X	X	X	X	X	X	X			pH: 7.90 temp: 20.2°C	
013 5	11/2-11/3/15	1130, 1515 0925, 1125	Aq.	4	X	X	X	X	X	X	X	X	X			pH: 7.87 temp: 20.8°C	

Relinquished by: (Signature)	Received by: (Signature)	Date:	Time:
[signature] / Herst + Assoc, Inc.	Fed Ex # 7748 9006 5785 (2pc)	11/3/15	1700
Relinquished by: (Signature)	Received by: (Signature) [signature]	11-4-15	1330
Relinquished by: (Signature)	Received by: (Signature)	Date:	Time:

Sample Custodian Remarks (Completed By Laboratory):

QA/QC Level		Turnaround	
Level I	☐	Routine	☐
Level II	☐	24 Hour	☐
Level III	☐	1 Week	☐
Other	☐	Other _____	

Sample Receipt	
Total # Containers Received?	
COC Seals Present?	
COC Seals Intact?	
Received Containers Intact?	
Temperature?	

Table 1
LPTP Discharge Samples
Bridgeton Landfill

						Parameter	Biochemical Oxygen Demand (5-day)	Chemical Oxygen Demand	Cyanide	Nitrate	Nitrite	Nitrogen, ammonia as N
						Total or Dissolved	NA	NA	NA	NA	NA	NA
						Permit Limitation/Surcharge Threshold	300 mg/l	600 mg/l				
Location	Date	Start Composite	End Composite	Lab Name	Data Status	Lab Report	mg/l	mg/l	mg/l	mg/l	mg/l	mg/l
MH013	11/10/2015	2:30 PM	9:00 PM	Pace	Validated	60207128	211	2350	0.0067	--	--	156
MH013	11/10/2015	3:00 PM	3:00 PM	Pace	Validated	60207061	--	--	--	--	--	--
MH013	11/10/2015	3:00 PM	3:00 PM	Pace	Validated	60207061	--	--	--	--	--	--

MSD 033182

Table 1
LPTP Discharge Samples
Bridgeton Landfill

						Parameter	Oil and Grease	Orthophosphate, as P	Permeate Produced	pH	pH	Phosphorus, total, as P
						Total or Dissolved	NA	NA	NA	NA	NA	NA
						Permit Limitation/Surcharge Threshold	200 mg/l			5.5 - 11.5 pH units	5.5 - 11.5 pH units	
Location	Date	Start Composite	End Composite	Lab Name	Data Status	Lab Report	mg/l	mg/l	gal	pH units	pH units	mg/l
MH013	11/10/2015	2:30 PM	9:00 PM	Pace	Validated	60207128	~~ND~~ <5	--	--	8.2	--	--
MH013	11/10/2015	3:00 PM	3:00 PM	Pace	Validated	60207061	--	--	--	--	--	--
MH013	11/10/2015	3:00 PM	3:00 PM	Pace	Validated	60207061	--	--	--	--	--	--

MSD 033183

Table 1
LPTP Discharge Samples
Bridgeton Landfill

						Parameter	Solids, total suspended	Metered Discharge	Flow Data for Potable Water	FIT-420 Flow	Conversion Factor	Calculated Discharge
						Total or Dissolved	NA	NA	NA	NA	NA	NA
						Permit Limitation/Surcharge Threshold	300 mg/l					
Location	Date	Start Composite	End Composite	Lab Name	Data Status	Lab Report	mg/l	gal	gal	gal		gal
MH013	11/10/2015	2:30 PM	9:00 PM	Pace	Validated	60207128	16.0	--	--	--	--	--
MH013	11/10/2015	3:00 PM	3:00 PM	Pace	Validated	60207061	--	--	--	--	--	--
MH013	11/10/2015	3:00 PM	3:00 PM	Pace	Validated	60207061	--	--	--	--	--	--

MSD 033184

Table 1
LPTP Discharge Samples
Bridgeton Landfill

						Parameter	Total Phenolics by Method 420.1	Total Phenolics by Method 625	Total Toxic Organics	Ultraviolet absorbance at 254 nm	Antimony	Arsenic
						Total or Dissolved	NA	NA	NA	NA	Total	Total
						Permit Limitation/Surcharge Threshold	21 mg/l	21 mg/l	5844 ug/l			770 ug/l
Location	Date	Start Composite	End Composite	Lab Name	Data Status	Lab Report	mg/l	mg/l	ug/l	cm-1	ug/l	ug/l
MH013	11/10/2015	2:30 PM	9:00 PM	Pace	Validated	60207128	0.25	2.4	530	--	10.2	306
MH013	11/10/2015	3:00 PM	3:00 PM	Pace	Validated	60207061	--	--	--	21.8	--	--
MH013	11/10/2015	3:00 PM	3:00 PM	Pace	Validated	60207061	--	--	--	21.8	--	--

Transmittance = 1.58×10^{-20} %

Enter Method 420.1 plus 11 individual phenolics

MSD 033185

Table 1
LPTP Discharge Samples
Bridgeton Landfill

						Parameter	Beryllium	Cadmium	Chromium	Copper	Iron	Lead
						Total or Dissolved	Total	Total	Total	Total	Total	Total
						Permit Limitation/Surcharge Threshold		700 ug/l	5000 ug/l	2700 ug/l	150000 ug/l	400 ug/l
Location	Date	Start Composite	End Composite	Lab Name	Data Status	Lab Report	ug/l	ug/l	ug/l	ug/l	ug/l	ug/l
MH013	11/10/2015	2:30 PM	9:00 PM	Pace	Validated	60207128	~~ND~~ <1	~~ND~~ <5	31.6	~~ND~~ <10	1330	~~ND~~ <5
MH013	11/10/2015	3:00 PM	3:00 PM	Pace	Validated	60207061	--	--	--	--	--	--
MH013	11/10/2015	3:00 PM	3:00 PM	Pace	Validated	60207061	--	--	--	--	--	--

MSD 033186

Table 1
LPTP Discharge Samples
Bridgeton Landfill

						Parameter	Magnesium	Mercury	Nickel	Selenium	Silver	Thallium
						Total or Dissolved	Total	Total	Total	Total	Total	Total
						Permit Limitation/Surcharge Threshold		10 ug/l	2300 ug/l		500 ug/l	
Location	Date	Start Composite	End Composite	Lab Name	Data Status	Lab Report	ug/l	ug/l	ug/l	ug/l	ug/l	ug/l
MH013	11/10/2015	2:30 PM	9:00 PM	Pace	Validated	60207128	121000	~~ND~~ <0.2	26.0	~~ND~~ <15	~~ND~~ <7	~~ND~~ <20
MH013	11/10/2015	3:00 PM	3:00 PM	Pace	Validated	60207061	--	--	--	--	--	--
MH013	11/10/2015	3:00 PM	3:00 PM	Pace	Validated	60207061	--	--	--	--	--	--

MSD 033187

Table 1
LPTP Discharge Samples
Bridgeton Landfill

						Parameter	Zinc	1,2,4-Trichlorobenzene	2,4,6-Trichlorophenol	2,4-Dichlorophenol	2,4-Dimethylphenol	2,4-Dinitrophenol
						Total or Dissolved	Total	NA	NA	NA	NA	NA
						Permit Limitation/Surcharge Threshold	3000 ug/l					
Location	Date	Start Composite	End Composite	Lab Name	Data Status	Lab Report	ug/l	ug/l	ug/l	ug/l	ug/l	ug/l
MH013	11/10/2015	2:30 PM	9:00 PM	Pace	Validated	60207128	65.1	~~ND~~ <100	~~ND~~ <100	~~ND~~ <100	~~ND~~ <100	~~ND~~ <1000
MH013	11/10/2015	3:00 PM	3:00 PM	Pace	Validated	60207061	--	--	--	--	--	--
MH013	11/10/2015	3:00 PM	3:00 PM	Pace	Validated	60207061	--	--	--	--	--	--

MSD 033188

Table 1
LPTP Discharge Samples
Bridgeton Landfill

						Parameter	2,4-Dinitrotoluene	2,6-Dinitrotoluene	2-Chloronaphthalene	2-Chlorophenol	2-Methyl-4,6-dinitrophenol	2-Nitrophenol
						Total or Dissolved	NA	NA	NA	NA	NA	NA
						Permit Limitation/Surcharge Threshold						
Location	Date	Start Composite	End Composite	Lab Name	Data Status	Lab Report	ug/l	ug/l	ug/l	ug/l	ug/l	ug/l
MH013	11/10/2015	2:30 PM	9:00 PM	Pace	Validated	60207128	ND	ND	ND	~~ND~~ <100	~~ND~~ <500	~~ND~~ <100
MH013	11/10/2015	3:00 PM	3:00 PM	Pace	Validated	60207061	--	--	--	--	--	--
MH013	11/10/2015	3:00 PM	3:00 PM	Pace	Validated	60207061	--	--	--	--	--	--

MSD 033189

Table 1
LPTP Discharge Samples
Bridgeton Landfill

						Parameter	3,3'-Dichlorobenzidine	4-Bromophenyl phenyl ether	4-Chloro-3-methylphenol	4-Chlorophenyl phenyl ether	4-Nitrophenol	Acenaphthene
						Total or Dissolved	NA	NA	NA	NA	NA	NA
						Permit Limitation/Surcharge Threshold						
Location	Date	Start Composite	End Composite	Lab Name	Data Status	Lab Report	ug/l	ug/l	ug/l	ug/l	ug/l	ug/l
MH013	11/10/2015	2:30 PM	9:00 PM	Pace	Validated	60207128	ND	ND	~~ND~~ <100	ND	~~ND~~ <100	ND
MH013	11/10/2015	3:00 PM	3:00 PM	Pace	Validated	60207061	--	--	--	--	--	--
MH013	11/10/2015	3:00 PM	3:00 PM	Pace	Validated	60207061	--	--	--	--	--	--

MSD 033190

Table 1
LPTP Discharge Samples
Bridgeton Landfill

						Parameter	Acenaphthylene	Anthracene	Benz(a)anthracene	Benzidine	Benzo(a)pyrene	Benzo(b)fluoranthene
						Total or Dissolved	NA	NA	NA	NA	NA	NA
						Permit Limitation/Surcharge Threshold						
Location	Date	Start Composite	End Composite	Lab Name	Data Status	Lab Report	ug/l	ug/l	ug/l	ug/l	ug/l	ug/l
MH013	11/10/2015	2:30 PM	9:00 PM	Pace	Validated	60207128	ND	ND	ND	ND	ND	ND
MH013	11/10/2015	3:00 PM	3:00 PM	Pace	Validated	60207061	--	--	--	--	--	--
MH013	11/10/2015	3:00 PM	3:00 PM	Pace	Validated	60207061	--	--	--	--	--	--

MSD 033191

Table 1
LPTP Discharge Samples
Bridgeton Landfill

						Parameter	Benzo(g,h,i)perylene	Benzo(k)fluoranthene	Bis(2-chloroethoxy)methane	Bis(2-chloroethyl)ether	Bis(2-chloroisopropyl)ether	Bis(2-ethylhexyl)phthalate
						Total or Dissolved	NA	NA	NA	NA	NA	NA
						Permit Limitation/Surcharge Threshold						
Location	Date	Start Composite	End Composite	Lab Name	Data Status	Lab Report	ug/l	ug/l	ug/l	ug/l	ug/l	ug/l
MH013	11/10/2015	2:30 PM	9:00 PM	Pace	Validated	60207128	ND	ND	ND	ND	ND	ND
MH013	11/10/2015	3:00 PM	3:00 PM	Pace	Validated	60207061	--	--	--	--	--	--
MH013	11/10/2015	3:00 PM	3:00 PM	Pace	Validated	60207061	--	--	--	--	--	--

Table 1
LPTP Discharge Samples
Bridgeton Landfill

						Parameter	Butyl benzyl phthalate	Chrysene	Dibenz(a,h)anthracene	Diethyl phthalate	Dimethyl phthalate	Di-n-butyl phthalate
						Total or Dissolved	NA	NA	NA	NA	NA	NA
						Permit Limitation/Surcharge Threshold						
Location	Date	Start Composite	End Composite	Lab Name	Data Status	Lab Report	ug/l	ug/l	ug/l	ug/l	ug/l	ug/l
MH013	11/10/2015	2:30 PM	9:00 PM	Pace	Validated	60207128	ND	ND	ND	ND	ND	ND
MH013	11/10/2015	3:00 PM	3:00 PM	Pace	Validated	60207061	--	--	--	--	--	--
MH013	11/10/2015	3:00 PM	3:00 PM	Pace	Validated	60207061	--	--	--	--	--	--

MSD 033193

Table 1
LPTP Discharge Samples
Bridgeton Landfill

						Parameter	Di-n-octyl phthalate	Fluoranthene	Fluorene	Hexachlorobenzene	Hexachlorobutadiene	Hexachlorocyclopentadiene
						Total or Dissolved	NA	NA	NA	NA	NA	NA
						Permit Limitation/Surcharge Threshold						
Location	Date	Start Composite	End Composite	Lab Name	Data Status	Lab Report	ug/l	ug/l	ug/l	ug/l	ug/l	ug/l
MH013	11/10/2015	2:30 PM	9:00 PM	Pace	Validated	60207128	ND	ND	ND	ND	~~ND~~ <100	ND
MH013	11/10/2015	3:00 PM	3:00 PM	Pace	Validated	60207061	--	--	--	--	--	--
MH013	11/10/2015	3:00 PM	3:00 PM	Pace	Validated	60207061	--	--	--	--	--	--

MSD 033194

Table 1
LPTP Discharge Samples
Bridgeton Landfill

						Parameter	Hexachloroethane	Indeno(1,2,3-cd)pyrene	Isophorone	Naphthalene	Nitrobenzene	N-Nitrosodimethylamine
						Total or Dissolved	NA	NA	NA	NA	NA	NA
						Permit Limitation/Surcharge Threshold						
Location	Date	Start Composite	End Composite	Lab Name	Data Status	Lab Report	ug/l	ug/l	ug/l	ug/l	ug/l	ug/l
MH013	11/10/2015	2:30 PM	9:00 PM	Pace	Validated	60207128	ND	ND	ND	~~ND~~ <100	ND	ND
MH013	11/10/2015	3:00 PM	3:00 PM	Pace	Validated	60207061	--	--	--	--	--	--
MH013	11/10/2015	3:00 PM	3:00 PM	Pace	Validated	60207061	--	--	--	--	--	--

MSD 033195

Table 1
LPTP Discharge Samples
Bridgeton Landfill

						Parameter	N-Nitrosodi-n-propylamine	N-Nitrosodiphenylamine	Pentachlorophenol	Phenanthrene	Phenol	Pyrene
						Total or Dissolved	NA	NA	NA	NA	NA	NA
						Permit Limitation/Surcharge Threshold						
Location	Date	Start Composite	End Composite	Lab Name	Data Status	Lab Report	ug/l	ug/l	ug/l	ug/l	ug/l	ug/l
MH013	11/10/2015	2:30 PM	9:00 PM	Pace	Validated	60207128	ND	ND	~~ND~~ <100	ND	~~ND~~ <100	ND
MH013	11/10/2015	3:00 PM	3:00 PM	Pace	Validated	60207061	--	--	--	--	--	--
MH013	11/10/2015	3:00 PM	3:00 PM	Pace	Validated	60207061	--	--	--	--	--	--

MSD 033196

Table 1
LPTP Discharge Samples
Bridgeton Landfill

						Parameter	1,1,1-Trichloroethane	1,1,2,2-Tetrachloroethane	1,1,2-Trichloroethane	1,1-Dichloroethane	1,1-Dichloroethylene	1,2-Dichlorobenzene
						Total or Dissolved	NA	NA	NA	NA	NA	NA
						Permit Limitation/Surcharge Threshold						
Location	Date	Start Composite	End Composite	Lab Name	Data Status	Lab Report	ug/l	ug/l	ug/l	ug/l	ug/l	ug/l
MH013	11/10/2015	2:30 PM	9:00 PM	Pace	Validated	60207128	ND	~~ND~~ <10	ND	ND	ND	~~ND~~ <10
MH013	11/10/2015	3:00 PM	3:00 PM	Pace	Validated	60207061	--	--	--	--	--	--
MH013	11/10/2015	3:00 PM	3:00 PM	Pace	Validated	60207061	--	--	--	--	--	--

MSD 033197

Table 1
LPTP Discharge Samples
Bridgeton Landfill

						Parameter	1,2-Dichloroethane	1,2-Dichloroethylene, cis	1,2-Dichloroethylene, trans	1,2-Dichloropropane	1,3-Dichloro-1-propene, cis	1,3-Dichloro-1-propene, trans
						Total or Dissolved	NA	NA	NA	NA	NA	NA
						Permit Limitation/Surcharge Threshold						
Location	Date	Start Composite	End Composite	Lab Name	Data Status	Lab Report	ug/l	ug/l	ug/l	ug/l	ug/l	ug/l
MH013	11/10/2015	2:30 PM	9:00 PM	Pace	Validated	60207128	ND	ND	ND	ND	ND	ND
MH013	11/10/2015	3:00 PM	3:00 PM	Pace	Validated	60207061	--	--	--	--	--	--
MH013	11/10/2015	3:00 PM	3:00 PM	Pace	Validated	60207061	--	--	--	--	--	--

Table 1
LPTP Discharge Samples
Bridgeton Landfill

						Parameter	1,3-Dichlorobenzene	1,4-Dichlorobenzene	2-Chloroethyl vinyl ether	Benzene	Bromodichloromethane	Bromoform
						Total or Dissolved	NA	NA	NA	NA	NA	NA
						Permit Limitation/Surcharge Threshold				140 ug/l		
Location	Date	Start Composite	End Composite	Lab Name	Data Status	Lab Report	ug/l	ug/l	ug/l	ug/l	ug/l	ug/l
MH013	11/10/2015	2:30 PM	9:00 PM	Pace	Validated	60207128	ND	~~ND~~ 410	ND	~~ND~~ < 10	ND	ND
MH013	11/10/2015	3:00 PM	3:00 PM	Pace	Validated	60207061	--	--	--	--	--	--
MH013	11/10/2015	3:00 PM	3:00 PM	Pace	Validated	60207061	--	--	--	--	--	--

MSD 033199

Table 1
LPTP Discharge Samples
Bridgeton Landfill

						Parameter	Bromomethane	Carbon tetrachloride	Chlorobenzene	Chlorodibromomethane	Chloroethane	Chloroform
						Total or Dissolved	NA	NA	NA	NA	NA	NA
						Permit Limitation/Surcharge Threshold						
Location	Date	Start Composite	End Composite	Lab Name	Data Status	Lab Report	ug/l	ug/l	ug/l	ug/l	ug/l	ug/l
MH013	11/10/2015	2:30 PM	9:00 PM	Pace	Validated	60207128	~~ND~~ <50	ND	~~ND~~ <10	ND	ND	ND
MH013	11/10/2015	3:00 PM	3:00 PM	Pace	Validated	60207061	--	--	--	--	--	--
MH013	11/10/2015	3:00 PM	3:00 PM	Pace	Validated	60207061	--	--	--	--	--	--

MSD 033200

Table 1
LPTP Discharge Samples
Bridgeton Landfill

						Parameter	Chloromethane	Ethyl benzene	Methylene chloride	Tetrachloroethylene	Toluene	Trichloroethylene
						Total or Dissolved	NA	NA	NA	NA	NA	NA
						Permit Limitation/Surcharge Threshold						
Location	Date	Start Composite	End Composite	Lab Name	Data Status	Lab Report	ug/l	ug/l	ug/l	ug/l	ug/l	ug/l
MH013	11/10/2015	2:30 PM	9:00 PM	Pace	Validated	60207128	ND	~~ND~~ <10	~~ND~~ <10	ND	~~ND~~ <10	ND
MH013	11/10/2015	3:00 PM	3:00 PM	Pace	Validated	60207061	--	--	--	--	--	--
MH013	11/10/2015	3:00 PM	3:00 PM	Pace	Validated	60207061	--	--	--	--	--	--

MSD 033201

Table 1
LPTP Discharge Samples
Bridgeton Landfill

						Parameter	Trichlorofluoro methane	Vinyl chloride	Xylene, total	4,4'-DDD	4,4'-DDE	4,4'-DDT
						Total or Dissolved	NA	NA	NA	NA	NA	NA
						Permit Limitation/Surcharge Threshold						
Location	Date	Start Composite	End Composite	Lab Name	Data Status	Lab Report	ug/l	ug/l	ug/l	ug/l	ug/l	ug/l
MH013	11/10/2015	2:30 PM	9:00 PM	Pace	Validated	60207128	ND	ND	ND	--	--	--
MH013	11/10/2015	3:00 PM	3:00 PM	Pace	Validated	60207061	--	--	--	--	--	--
MH013	11/10/2015	3:00 PM	3:00 PM	Pace	Validated	60207061	--	--	--	--	--	--

Metropolitan St. Louis Sewer District

(/)

BILLING 1 (866) 281-5737

CUSTOMER SERVICE (314) 768-6260

Home (/) > Blog (/blog) > ***Final Test Results From the Bridgeton Landfill Pump Station***

Final Test Results From the Bridgeton Landfill Pump Station

Published on Friday, December 4, 2015

The Metropolitan St. Louis Sewer (/customer-service/glossary/letter_s#Sewer) District (/customer-service/glossary/letter_d#District) (MSD (/customer-service/glossary/letter_m#MSD)) has received and reviewed the results of all water quality (/customer-service/glossary/letter_w#Water_Quality) samples collected from the sewage overflow that occurred at the Bridgeton Landfill on October 27, 2015. MSD collected samples from the sewage overflow and sent them to laboratories for testing. The testing matched the testing parameters MSD normally uses for the Bridgeton Landfill which includes metals, organic chemicals, and radionuclides. Final test results showed that any pollutants released from the sewage spill did not pose a threat to public health.

The sewage overflow was discovered after a technician from MSD responded to an alarm at a nearby facility and discovered the pump station (/customer-service/glossary/letter_p#Pump_Station), located on Bridgeton Landfill property, was not operating. The pump station stopped operating as a result of a buildup of material that clogged up the valves and other mechanical components within the pump station.

The sewage overflow was contained and cleaned up within 48-hours of when the overflow was discovered.

This pump station takes sewage from Bridgeton Landfill's pre-treatment facility and puts it into a force main that eventually

leads to the Bissell Point Wastewater Treatment Plant (/customer-service/glossary/letter_w#Wastewater_Treatment_Plant) located along the Mississippi River.

As a result of this overflow event, and as a measure designed to lower the risk of a similar event re-occurring, MSD has increased its frequency of inspections for this the pump station to weekly. The most recent inspection prior to this sewage overflow was conducted on October 5, 2015. At that time, no visible signs of an issue were discovered.

MSD understands the community's concerns about the Bridgeton Landfill and its operations. MSD will continue to publicly share further information on this incident as it becomes available.

(http://www.knowyourzone.org/)

(/blog)(https://www.flickr.com/photos/yourmsd/)(https://www.youtube.com/YourMSD)

Privacy Policy (/privacy-policy) | Site Map (/sitemap) | Terms of Use (/terms-use) | Search (/search)

© 2016 Metropolitan St. Louis Sewer District All rights reserved.

MSD 033204

Doug Mendoza

From: Doug Mendoza
Sent: Wednesday, December 09, 2015 10:59 AM
To: Sean Hadley
Subject: RE: Bridgeton Landfill bypass results

This is what we asked the labs to test for.

This also is pretty much what is either included in Bridgeton Landfill's permit, or that MSD routinely tests for at Bridgeton Landfill. MSD tests for a few chemicals that Bridgeton Landfill is required to, such as calcium, acetone, methyl ethyl ketone, and thorium-230.

However, the pesticides and PCB's are not normally analyzed (but they also were non-detect in the results). So if you were going to remove anything, it would be these.

---Doug

From: Sean Hadley
Sent: Wednesday, December 09, 2015 10:47 AM
To: Doug Mendoza
Subject: RE: Bridgeton Landfill bypass results

Ok can we break it out into just the chemicals that we asked the lab to test for? Or if this is all of them, then the ones that don't have parameters does that go back to what you explained to me about previous testing on landfills?

Sean

From: Doug Mendoza
Sent: Wednesday, December 9, 2015 9:10 AM
To: Sean Hadley
Subject: Bridgeton Landfill bypass results

Doug Mendoza

From: Doug Mendoza
Sent: Wednesday, December 09, 2015 9:10 AM
To: Sean Hadley
Subject: Bridgeton Landfill bypass results
Attachments: Bridgeton Landfill bypass - analytical results and limits.xlsx

Chemical Name	<	Result	Units	Discharge Limit	Limit Type	Set By	Notes
Ammonia (as N)	<	0.12	mg/L				Monitoring requirement only to insure no adverse impact on MSD treatment plant
Biochemical Oxygen Demand (5 Day)		26	mg/L				Monitoring requirement only for potential high strength billing
Chemical Oxygen Demand		198	mg/L				Monitoring requirement only for potential high strength billing
Oil and Grease (Total)		4.3	mg/L	200	Instant	MSD	All industries are limited to this amount. Intended to protect sewer system.
pH		6.7	SU	5.5-11.5	Instant	MSD	All industries are limited to this amount. Intended to protect sewer system.
Total Phenols	<	0.1	mg/L	21	Instant	MSD	All industries are limited to this amount. Total discharge from all industries is limited so that MSD can meet its discharge limits.
Total Suspended Solids		13	mg/L				Monitoring requirement only for potential high strength billing
Transmittance Filtered		3.4	%				Monitoring requirement only to insure no adverse impact on MSD treatment plant
Transmittance Unfiltered		2.1	%				Monitoring requirement only to insure no adverse impact on MSD treatment plant
Arsenic (Total)		0.032	mg/L	0.77	Daily Avg.	MSD	All industries are limited to this amount. Total discharge from all industries is limited so that MSD can meet its discharge limits.
Cadmium (Total)	<	0.002	mg/L	0.7	Daily Avg.	MSD	All industries are limited to this amount. Total discharge from all industries is limited so that MSD can meet its discharge limits.
Calcium (Total)		57	mg/L				Monitoring requirement only to insure no adverse impact on MSD treatment plant
Chromium (Total)		0.0039	mg/L	5	Daily Avg.	MSD	All industries are limited to this amount. Total discharge from all industries is limited so that MSD can meet its discharge limits.
Copper (Total)		0.0075	mg/L	2.7		MSD	All industries are limited to this amount. Total discharge from all industries is limited so that MSD can meet its discharge limits.
Iron (Total)		0.62	mg/L	150	Daily Avg.	MSD	All industries are limited to this amount. Total discharge from all industries is limited so that MSD can meet its discharge limits.
Lead (Total)	<	0.01	mg/L	0.4	Daily Avg.	MSD	All industries are limited to this amount. Total discharge from all industries is limited so that MSD can meet its discharge limits.
Magnesium (Total)		17	mg/L				Monitoring requirement only to insure no adverse impact on MSD treatment plant
Mercury (Total)	<	0.0002	mg/L	0.01	Daily Avg.	MSD	All industries are limited to this amount. Total discharge from all industries is limited so that MSD can meet its discharge limits.
Nickel (Total)		0.043	mg/L	2.3	Daily Avg.	MSD	All industries are limited to this amount. Total discharge from all industries is limited so that MSD can meet its discharge limits.
Silver (Total)		0.0022	mg/L	0.5	Daily Avg.	MSD	All industries are limited to this amount. Total discharge from all industries is limited so that MSD can meet its discharge limits.
Zinc (Total)		0.04	mg/L	3	Daily Avg.	MSD	All industries are limited to this amount. Total discharge from all industries is limited so that MSD can meet its discharge limits.
Aldrin	<	0.5	ug/L				Pesticides
Chlordane	<	5	ug/L				Pesticides
Dieldrin	<	1	ug/L				Pesticides
Endrin	<	1	ug/L				Pesticides
Endrin Aldehyde	<	1	ug/L				Pesticides
Endrin Ketone	<	1	ug/L				Pesticides
Endosulfan Sulfate	<	1	ug/L				Pesticides
Heptachlor	<	0.5	ug/L				Pesticides
Heptachlor Epoxide	<	0.5	ug/L				Pesticides
Toxaphene	<	5	ug/L				Pesticides
4,4 - DDD	<	1	ug/L				Pesticides
4,4 - DDE	<	1	ug/L				Pesticides
4,4 - DDT	<	1	ug/L				Pesticides
alpha - BHC	<	0.5	ug/L				Pesticides
alpha - Endosulfan	<	0.5	ug/L				Pesticides

Chemical Name	<	Result	Units	Discharge Limit	Limit Type	Set By	Notes
beta - BHC	<	0.5	ug/L				Pesticides
beta - Endosulfan	<	1	ug/L				Pesticides
delta - BHC	<	0.5	ug/L				Pesticides
gamma - BHC	<	0.5	ug/L				Pesticides
Bromomethane	<	2	ug/L				Volatile & semi-volatile organics
Bromoform	<	10	ug/L				Volatile & semi-volatile organics
Xylene (Total)	<	10	ug/L				Volatile & semi-volatile organics
Vinyl Chloride	<	0.6	ug/L				Volatile & semi-volatile organics
Trichloroethene	<	10	ug/L				Volatile & semi-volatile organics
Toluene	<	10	ug/L				Volatile & semi-volatile organics
Trichlorofluoromethane	<	10	ug/L				Volatile & semi-volatile organics
Tetrachloroethene	<	10	ug/L				Volatile & semi-volatile organics
Methylene Chloride	<	10	ug/L				Volatile & semi-volatile organics
Ethylbenzene	<	10	ug/L				Volatile & semi-volatile organics
Dibromochloromethane	<	10	ug/L				Volatile & semi-volatile organics
Carbon Tetrachloride	<	10	ug/L				Volatile & semi-volatile organics
Chloromethane	<	10	ug/L				Volatile & semi-volatile organics
Chloroform	<	10	ug/L				Volatile & semi-volatile organics
Chloroethane	<	10	ug/L				Volatile & semi-volatile organics
Chlorobenzene	<	10	ug/L				Volatile & semi-volatile organics
Bromodichloromethane	<	10	ug/L				Volatile & semi-volatile organics
Benzene	<	10	ug/L	0.14	Instant	MSD	Based on OSHA exposure limits for workers, expected to be present in the treated leachate.
1,1 - dichloroethene	<	10	ug/L				Volatile & semi-volatile organics
1,1,1 - trichloroethane	<	10	ug/L				Volatile & semi-volatile organics
1,1,2,2 - tetrachloroethane	<	10	ug/L				Volatile & semi-volatile organics
1,1,2 - trichloroethane	<	10	ug/L				Volatile & semi-volatile organics
1,1 - dichloroethane	<	10	ug/L				Volatile & semi-volatile organics
1,2 - dichlorobenzene	<	10	ug/L				Volatile & semi-volatile organics
1,2 - dichloroethane	<	10	ug/L				Volatile & semi-volatile organics
1,2 - dichloropropane	<	10	ug/L				Volatile & semi-volatile organics
1,3 - dichlorobenzene	<	10	ug/L				Volatile & semi-volatile organics
1,4 - dichlorobenzene	<	10	ug/L				Volatile & semi-volatile organics
2 - chloroethyl vinyl ether	<	10	ug/L				Volatile & semi-volatile organics
cis - 1,3 - dichloropropene	<	10	ug/L				Volatile & semi-volatile organics
trans - 1,3 - dichloropropene	<	10	ug/L				Volatile & semi-volatile organics
trans - 1,2 - dichloroethene	<	10	ug/L				Volatile & semi-volatile organics
Methyl Ethyl Ketone		19.87	ug/L	249,000	Instant	MSD	Based on OSHA exposure limits for workers, expected to be present in the treated leachate.
Acetone		44.56	ug/L	1,380,000	Instant	MSD	Based on OSHA exposure limits for workers, expected to be present in the treated leachate.
Dimethyl Phthalate	<	10	ug/L				Volatile & semi-volatile organics
Acenaphthene	<	10	ug/L				Volatile & semi-volatile organics
Acenaphthylene	<	10	ug/L				Volatile & semi-volatile organics
Anthracene	<	10	ug/L				Volatile & semi-volatile organics
Butyl Benzyl Phthalate	<	10	ug/L				Volatile & semi-volatile organics
Benzidine	<	80	ug/L				Volatile & semi-volatile organics
Benzo(a)anthracene	<	10	ug/L				Volatile & semi-volatile organics
Benzo(b)fluoranthene	<	10	ug/L				Volatile & semi-volatile organics
Benzo(g,h,i)perylene	<	10	ug/L				Volatile & semi-volatile organics

Chemical Name	<	Result	Units	Discharge Limit	Limit Type	Set By	Notes
Benzo(k)fluoranthene	<	10	ug/L				Volatile & semi-volatile organics
Benzo(a)pyrene	<	10	ug/L				Volatile & semi-volatile organics
Bis(2-chloroethyl)ether	<	10	ug/L				Volatile & semi-volatile organics
Bis(2-chloroisopropyl)ether	<	10	ug/L				Volatile & semi-volatile organics
Bis(2-chloroethoxy)methane	<	10	ug/L				Volatile & semi-volatile organics
Bis(2-ethylhexyl)phthalate	<	10	ug/L				Volatile & semi-volatile organics
Chrysene	<	10	ug/L				Volatile & semi-volatile organics
Dibenzo(a,h)anthracene	<	10	ug/L				Volatile & semi-volatile organics
Di-n-butyl phthalate	<	10	ug/L				Volatile & semi-volatile organics
Diethyl Phthalate	<	10	ug/L				Volatile & semi-volatile organics
Fluoranthene	<	10	ug/L				Volatile & semi-volatile organics
Fluorene	<	10	ug/L				Volatile & semi-volatile organics
Hexachlorobutadiene	<	2	ug/L				Volatile & semi-volatile organics
Hexachlorocyclopentadiene	<	2	ug/L				Volatile & semi-volatile organics
Hexachloroethane	<	10	ug/L				Volatile & semi-volatile organics
Hexachlorobenzene	<	10	ug/L				Volatile & semi-volatile organics
Indeno (1,2,3-cd) pyrene	<	10	ug/L				Volatile & semi-volatile organics
Isophorone	<	10	ug/L				Volatile & semi-volatile organics
Naphthalene	<	10	ug/L				Volatile & semi-volatile organics
Nitrobenzene	<	10	ug/L				Volatile & semi-volatile organics
Phenanthrene	<	10	ug/L				Volatile & semi-volatile organics
Pyrene	<	10	ug/L				Volatile & semi-volatile organics
1,2 - diphenylhydrazine	<	10	ug/L				Volatile & semi-volatile organics
1,2,4 - trichlorobenzene	<	10	ug/L				Volatile & semi-volatile organics
1,2 - dichlorobenzene	<	10	ug/L				Volatile & semi-volatile organics
1,3 - dichlorobenzene	<	10	ug/L				Volatile & semi-volatile organics
1,4 - dichlorobenzene	<	10	ug/L				Volatile & semi-volatile organics
2,4 - dinitrotoluene	<	10	ug/L				Volatile & semi-volatile organics
2,6 - dinitrotoluene	<	10	ug/L				Volatile & semi-volatile organics
2 - chloronaphthalene	<	10	ug/L				Volatile & semi-volatile organics
3,3 - dichlorobenzidine	<	10	ug/L				Volatile & semi-volatile organics
4 - bromophenyl phenyl ether	<	10	ug/L				Volatile & semi-volatile organics
4 - chlorophenyl phenyl ether	<	10	ug/L				Volatile & semi-volatile organics
Di-n-octyl phthalate	<	10	ug/L				Volatile & semi-volatile organics
N - Nitrosodi-n-propylamine	<	10	ug/L				Volatile & semi-volatile organics
N - Nitrosodimethylamine	<	10	ug/L				Volatile & semi-volatile organics
N - Nitrosodiphenylamine	<	10	ug/L				Volatile & semi-volatile organics
PCB - 1242	<	5	ug/L				PCBs
PCB - 1016	<	5	ug/L				PCBs
PCB - 1221	<	10	ug/L				PCBs
PCB - 1232	<	5	ug/L				PCBs
PCB - 1248	<	5	ug/L				PCBs
PCB - 1254	<	10	ug/L				PCBs
PCB - 1260	<	10	ug/L				PCBs
Total Toxic Organics	<	856.6	ug/L	5,822	Instant	MSD	Sum of all EPA-regulated organics. All industries are limited to this amount. Intended to protect workers in sewer system. Xylene, Methyl Ethyl Ketone, Acetone not regulated by EPA as part of TTO.

Chemical Name	<	Result	Units	Discharge Limit	Limit Type	Set By	Notes
Gross Alpha	<	2.88	pCi/L				Monitoring requirement only. EPA drinking water limit is 15 pCi/L.
Gross Beta		11.6	pCi/L				Monitoring requirement only. EPA drinking water limit is 4 mrem/yr dose, investigation trigger is 50 pCi/L.
Gross Gamma		847.26	pCi/L				Monitoring requirement only. No EPA drinking water limit. Potassium-40 (naturally occurring gamma emitter) has an NRC limit of 40,000 pCi/L.
Radium-226	<	0.528	pCi/L	600	Monthly Avg.	NRC	EPA drinking water limit is 5 pCi/L combined Ra-226 & Ra-228.
Radium-228	<	0.856	pCi/L	600	Monthly Avg.	NRC	EPA drinking water limit is 5 pCi/L combined Ra-226 & Ra-228.
Thorium-230	<	0.438	pCi/L	1,000	Monthly Avg.	NRC	No EPA drinking water limit.
Uranium-natural	<	0.534	pCi/L	3,000	Monthly Avg.	NRC	No EPA drinking water limit.
Uranium (Total)		0.577	ug/L				Monitoring requirement only. EPA drinking water limit is 30 ug/L.

Doug Mendoza

Bridgeton Landfill

From: Ed Galbraith <EGalbraith@barr.com>
Sent: Tuesday, December 01, 2015 9:07 AM
To: Doug Mendoza; John Lodderhose; Brian G. Gibson; Michael Grace; Nora C. Estopare; Rob G Daly; 'Getting, James'; Christopher J. Bulmahn; Mike Townley; Becca Coyle
Cc: 'bpower@republicservices.com'; 'Bouchard, Derek (DBouchard@republicservices.com)'; Kelly Caddy; Dana B. Pasi
Subject: Lab Report Notification

In order to meet the permit 21-day reporting period, the following lab reports have been posted to the Barr ftp site at ftp://ftp.barr.com/bridgetonlandfill/2015%20Reports/2015_1202/Lab%20Reports/LPTP%20-%20Onsite%20Discharge/

Lab	Report	Date Sampled	Parameters	Sample Location
PACE LABORATORIES	60207128	11/10/2015	VOCS, TOT PHEN, TOT CN, SVOCS, O&G, TOT METALS,	013
PACE LABORATORIES	60207061	11/10/2015	UV 254	013

Ed Galbraith

Senior Environmental Consultant
Jefferson City, MO office: 573.638.5024
cell: 573.418.5562
egalbraith@barr.com
www.barr.com

resourceful. naturally. BARR

TO: **File**

FROM: Angie McDonough amm

DATE: November 24, 2015

RE: **BRIDGETON LANDFILL LLC**
WASTEWATER USER CHARGE BILLING
ACCOUNT NUMBER 0039145-8

Pursuant to the MSD Industrial Wastewater Discharge Permit for the above referenced facility, this facility will be billed for the following charges for the indicated billing period:

DISCHARGE PERIOD: **October 2015**

BILLING IS FOR: **On- Site and Hauled Special Discharge**

SAMPLE POINT: **013 - Commingled landfill leachate and landfill gas collection system condensate.**

Billing Item	Quantity	Units	Rate	Charge
Volume	8,637	CcF	$ 3.21 /CcF	$27,724.77
COD Extra-Strength Surcharge	2,684	mg/L	$316.19 /ton	$17,756.75
Hauled Volume (With COD & TSS Surcharge)	2,216			$75,944.22
Labor Fee				$1,779.49
Total	--	--	--	**$123,205.23**

If you have any questions, please call me at extension 8762.

bv

ec: Brian Gibson
Doug Mendoza
Bridgeton Republic Services

FILE: IU, Bridgeton Landfill LLC, 1003-8030-00

Doug Mendoza Bridgeton Landfill

From: Ed Galbraith <EGalbraith@barr.com>
Sent: Monday, November 23, 2015 3:50 PM
To: Doug Mendoza
Cc: bpower@republicservices.com; Bouchard, Derek (DBouchard@republicservices.com); Kamp, Kevin
Subject: FW: BRIDGETON PS2, RISER PIPE REPAIR , BENZENE EVENT.

All,

The following are our thoughts on the recent MSD result obtained in PS2, and a proposed next step. We note that the levels that were recorded by MSD staff (302 ppb maximum and 61 ppb average) are all well below the ACGIH Threshold Limit Value-Time Weighted Average (TLV-TWA) of 500 ppb (8-hour). You correctly point out that the most recent benzene levels in the permeate do not indicate that a significant vapor phase would be expected. We have reviewed information regarding the pretreatment plant status for that time period and there is nothing from an operational standpoint that would account for any inability to reduce VOCs.

Regarding the instrumentation and methodology, we do not know how the RAE was calibrated or used during the test, so we cannot speak to whether proper QC was followed. For example, SEP tubes are designed for instantaneous short-term (one minute) exposure evaluation, not long-term evaluation, with a manufacturer specified maximum viable life of 15 minutes and that with the caveat that accuracy deteriorates after the first one minute interval. Use of the same tube the for a longer interval could result in breakthrough and result in false readings triggered by other VOCs or even steam. It is not clear whether that is the case in this instance, however, instantaneous readings of Total VOCs in this range (0-329 ppb) would be consistent with a breakthrough of the filter media. In addition, the reporting accuracy of the UltraRAE 3000 is within 250 ppb and as such this reading is barely above instrument margin of error.

In general, this sample would not appear to indicate a worker safety issue in PS2, however we understand the importance of erasing all doubts so that MSD staff can work with confidence that their health is being protected. We would propose that Bridgeton staff and yours meet at PS2 with field instruments to co-sample and determine whether the results can be duplicated. This would also provide an opportunity to review testing and QC protocols to ensure that results are accurate and reliable.

If this is acceptable to you, it would probably be best for Derek Bouchard and Rob Daly to arrange a time to meet there.

Thank you.

Ed Galbraith
573-418-5562

Begin forwarded message:

From: Doug Mendoza <DMENDOZA@stlmsd.com>
Date: November 19, 2015 at 9:41:09 AM EST
To: "Power, Brian <BPower@republicservices.com> (BPower@republicservices.com) (BPower@republicservices.com)" <BPower@republicservices.com>
Subject: FW: BRIDGETON PS2, RISER PIPE REPAIR , BENZENE EVENT.

Brian,

I have not yet received any response. Would you please get one submitted to us?

Thanks,
Doug Mendoza
MSD Industrial Pretreatment Manager

From: Doug Mendoza
Sent: Thursday, November 12, 2015 10:38 AM
To: Ed Galbraith (EGalbraith@barr.com) (EGalbraith@barr.com); Power, Brian <BPower@republicservices.com> (BPower@republicservices.com) (BPower@republicservices.com)
Cc: Rob G Daly; Jay Kniker; Mark Bright; John Lodderhose
Subject: FW: BRIDGETON PS2, RISER PIPE REPAIR , BENZENE EVENT.

Ed & Brian,

I was recently informed that data collected at Bridgeton PS No. 2 site on October 28, using MSD's benzene tuned PID, showed benzene concentrations in the atmosphere. See the attached spreadsheet for details. The peak was 302 ppb, with an average of 61 ppb over roughly and hour. This was without ventilation turned on.

Our concern is that we were not expecting to see any benzene, based on recent historical readings of benzene in eel Bridgeton Landfill's leachate discharge.

SP	DATE	POLLUTANT	<	RESULT	UNIT	SAMPLER
013	10/15/2015	Benzene	<	1	ug/L	Industry
013	9/15/2015	Benzene	<	10	ug/L	Industry
013	8/27/2015	Benzene	<	10	ug/L	MSD
013	8/18/2015	Benzene	<	10	ug/L	Industry
013	7/21/2015	Benzene	<	20	ug/L	Industry
013	7/17/2015	Benzene	<	10	ug/L	MSD

Would you please check with your personnel and see if something specific occurred around that timeframe or has recently changed in general? As I'm sure you understand, our field personnel are very sensitive to any benzene levels in wastewater or the atmosphere surrounding the wastewater.

Sincerely,
Doug Mendoza
MSD Industrial Pretreatment Manager

Doug Mendoza Bridgeton Landfill

From: Graves, Stephen <sgraves@cecinc.com>
Sent: Monday, November 23, 2015 12:40 PM
To: Doug Mendoza; 'Ed Galbraith'
Cc: Kamp, Kevin; LaFata, Natalie; 'Bouchard, Derek (DBouchard@republicservices.com)'; 'Kelly Caddy'; Erin Fanning (EFanning@republicservices.com); Power, Brian
Subject: RE: Bridgeton Landfill flows - Installation of new flow measuring flume

This is correct

Stephen E. Graves, P.E. / Senior Project Manager
Civil & Environmental Consultants, Inc.
4848 Park 370 Blvd., Suite F · Hazelwood, MO 63042
Toll-Free: (866) 250-3679 · Fax: (314) 656-4595
Mobile: (314) 330-7512 · http://www.cecinc.com
Senior Leadership · Integrated Services · Personal Business Relationships

---

From: Doug Mendoza [mailto:DMENDOZA@stlmsd.com]
Sent: Monday, November 23, 2015 12:39 PM
To: Graves, Stephen; 'Ed Galbraith'
Cc: Kamp, Kevin; LaFata, Natalie; 'Bouchard, Derek (DBouchard@republicservices.com)'; 'Kelly Caddy'; Erin Fanning (EFanning@republicservices.com); Power, Brian
Subject: RE: Bridgeton Landfill flows - Installation of new flow measuring flume

And just to clarify, I understand that magnetic flow meters are being used instead of the planned Parshall flume because space constraints prevented adequate upstream and downstream pipe diameters for laminar flow, among other issues.

---Doug Mendoza

From: Graves, Stephen [mailto:sgraves@cecinc.com]
Sent: Monday, November 23, 2015 12:00 PM
To: Doug Mendoza; 'Ed Galbraith'
Cc: Kamp, Kevin; LaFata, Natalie; 'Bouchard, Derek (DBouchard@republicservices.com)'; 'Kelly Caddy'; Erin Fanning (EFanning@republicservices.com); Power, Brian
Subject: RE: Bridgeton Landfill flows - Installation of new flow measuring flume

Oops!

Those dates should have been to begin the week of 12/7/15 and should be complete by 12/15/15

Stephen E. Graves, P.E. / Senior Project Manager
Civil & Environmental Consultants, Inc.
4848 Park 370 Blvd., Suite F · Hazelwood, MO 63042
Toll-Free: (866) 250-3679 · Fax: (314) 656-4595
Mobile: (314) 330-7512 · http://www.cecinc.com
Senior Leadership · Integrated Services · Personal Business Relationships

Bridgeton Landfill

Doug Mendoza

From: Doug Mendoza
Sent: Monday, November 23, 2015 12:39 PM
To: 'Graves, Stephen'; 'Ed Galbraith'
Cc: Kamp, Kevin; LaFata, Natalie; 'Bouchard, Derek (DBouchard@republicservices.com)'; 'Kelly Caddy'; Erin Fanning (EFanning@republicservices.com); Power, Brian
Subject: RE: Bridgeton Landfill flows - Installation of new flow measuring flume

And just to clarify, I understand that magnetic flow meters are being used instead of the planned Parshall flume because space constraints prevented adequate upstream and downstream pipe diameters for laminar flow, among other issues.

---Doug Mendoza

From: Graves, Stephen [mailto:sgraves@cecinc.com]
Sent: Monday, November 23, 2015 12:00 PM
To: Doug Mendoza; 'Ed Galbraith'
Cc: Kamp, Kevin; LaFata, Natalie; 'Bouchard, Derek (DBouchard@republicservices.com)'; 'Kelly Caddy'; Erin Fanning (EFanning@republicservices.com); Power, Brian
Subject: RE: Bridgeton Landfill flows - Installation of new flow measuring flume

Oops!

Those dates should have been to begin the week of 12/7/15 and should be complete by 12/15/15

Stephen E. Graves, P.E. / Senior Project Manager
Civil & Environmental Consultants, Inc.
4848 Park 370 Blvd., Suite F · Hazelwood, MO 63042
Toll-Free: (866) 250-3679 · Fax: (314) 656-4595
Mobile: (314) 330-7512 · http://www.cecinc.com
Senior Leadership · Integrated Services · Personal Business Relationships

---

From: Graves, Stephen
Sent: Monday, November 23, 2015 11:55 AM
To: 'Doug Mendoza'; 'Ed Galbraith'
Cc: Kamp, Kevin; LaFata, Natalie; 'Bouchard, Derek (DBouchard@republicservices.com)'; 'Kelly Caddy'; Erin Fanning (EFanning@republicservices.com); Power, Brian
Subject: RE: Bridgeton Landfill flows - Installation of new flow measuring flume

Doug,

We have all of the equipment ordered and installation will begin the week of 11/7/15 and should be complete by 11/15/15. We will have two magnetic flow meters in parallel with one to be in service at all times with the other either being cleaned or cleaned and ready to use. I have attached the current drawings for the piping design which includes the two new flow meters and a new control valve, the valve will be connected through our SCADA system so that it will operate as the current one does allowing it to be closed by the MSD force main SCADA system as needed.

I will keep you informed of the progress of the installation as we progress.

pa

Doug Mendoza Bridgeton Landfill

From: Graves, Stephen <sgraves@cecinc.com>
Sent: Monday, November 23, 2015 12:00 PM
To: Doug Mendoza; 'Ed Galbraith'
Cc: Kamp, Kevin; LaFata, Natalie; 'Bouchard, Derek (DBouchard@republicservices.com)'; 'Kelly Caddy'; Erin Fanning (EFanning@republicservices.com); Power, Brian
Subject: RE: Bridgeton Landfill flows - Installation of new flow measuring flume

Oops!

Those dates should have been to begin the week of 12/7/15 and should be complete by 12/15/15

Stephen E. Graves, P.E. / Senior Project Manager
Civil & Environmental Consultants, Inc.
4848 Park 370 Blvd., Suite F · Hazelwood, MO 63042
Toll-Free: (866) 250-3679 · Fax: (314) 656-4595
Mobile: (314) 330-7512 · http://www.cecinc.com
Senior Leadership · Integrated Services · Personal Business Relationships

---

From: Graves, Stephen
Sent: Monday, November 23, 2015 11:55 AM
To: 'Doug Mendoza'; 'Ed Galbraith'
Cc: Kamp, Kevin; LaFata, Natalie; 'Bouchard, Derek (DBouchard@republicservices.com)'; 'Kelly Caddy'; Erin Fanning (EFanning@republicservices.com); Power, Brian
Subject: RE: Bridgeton Landfill flows - Installation of new flow measuring flume

Doug,

We have all of the equipment ordered and installation will begin the week of 11/7/15 and should be complete by 11/15/15. We will have two magnetic flow meters in parallel with one to be in service at all times with the other either being cleaned or cleaned and ready to use. I have attached the current drawings for the piping design which includes the two new flow meters and a new control valve, the valve will be connected through our SCADA system so that it will operate as the current one does allowing it to be closed by the MSD force main SCADA system as needed.

I will keep you informed of the progress of the installation as we progress.

If you have any questions please don't hesitate to ask.

Respectfully,

Steve Graves

Stephen E. Graves, P.E. / Senior Project Manager
Civil & Environmental Consultants, Inc.
4848 Park 370 Blvd., Suite F · Hazelwood, MO 63042
Toll-Free: (866) 250-3679 · Fax: (314) 656-4595
Mobile: (314) 330-7512 · http://www.cecinc.com
Senior Leadership · Integrated Services · Personal Business Relationships

Doug Mendoza Bridgeton Landfill

From: Graves, Stephen <sgraves@cecinc.com>
Sent: Monday, November 23, 2015 11:55 AM
To: Doug Mendoza; 'Ed Galbraith'
Cc: Kamp, Kevin; LaFata, Natalie; 'Bouchard, Derek (DBouchard@republicservices.com)'; 'Kelly Caddy'; Erin Fanning (EFanning@republicservices.com); Power, Brian
Subject: RE: Bridgeton Landfill flows - Installation of new flow measuring flume
Attachments: Discharge Piping modifications.pdf

Doug,

We have all of the equipment ordered and installation will begin the week of 11/7/15 and should be complete by 11/15/15. We will have two magnetic flow meters in parallel with one to be in service at all times with the other either being cleaned or cleaned and ready to use. I have attached the current drawings for the piping design which includes the two new flow meters and a new control valve, the valve will be connected through our SCADA system so that it will operate as the current one does allowing it to be closed by the MSD force main SCADA system as needed.

I will keep you informed of the progress of the installation as we progress.

If you have any questions please don't hesitate to ask.

Respectfully,

Steve Graves

Stephen E. Graves, P.E. / Senior Project Manager
Civil & Environmental Consultants, Inc.
4848 Park 370 Blvd., Suite F · Hazelwood, MO 63042
Toll-Free: (866) 250-3679 · Fax: (314) 656-4595
Mobile: (314) 330-7512 · http://www.cecinc.com
Senior Leadership · Integrated Services · Personal Business Relationships

---

From: Doug Mendoza [mailto:DMENDOZA@stlmsd.com]
Sent: Monday, November 16, 2015 8:49 AM
To: Graves, Stephen; 'Ed Galbraith'
Cc: Kamp, Kevin; LaFata, Natalie; 'Bouchard, Derek (DBouchard@republicservices.com)'; 'Kelly Caddy'
Subject: RE: Bridgeton Landfill flows - Installation of new flow measuring flume

Steve,

Would you please let me know where this stands as far as timing?

From item 2 below:

> A new flume and measuring instrument is in the process of being specified and purchased and will be installed immediately upon receipt. The flume will be installed at ground level where it can be visually monitored and easily cleaned thus keeping not only the precision but the accuracy of the measurement correct at all times. This project should be completed by mid-November.

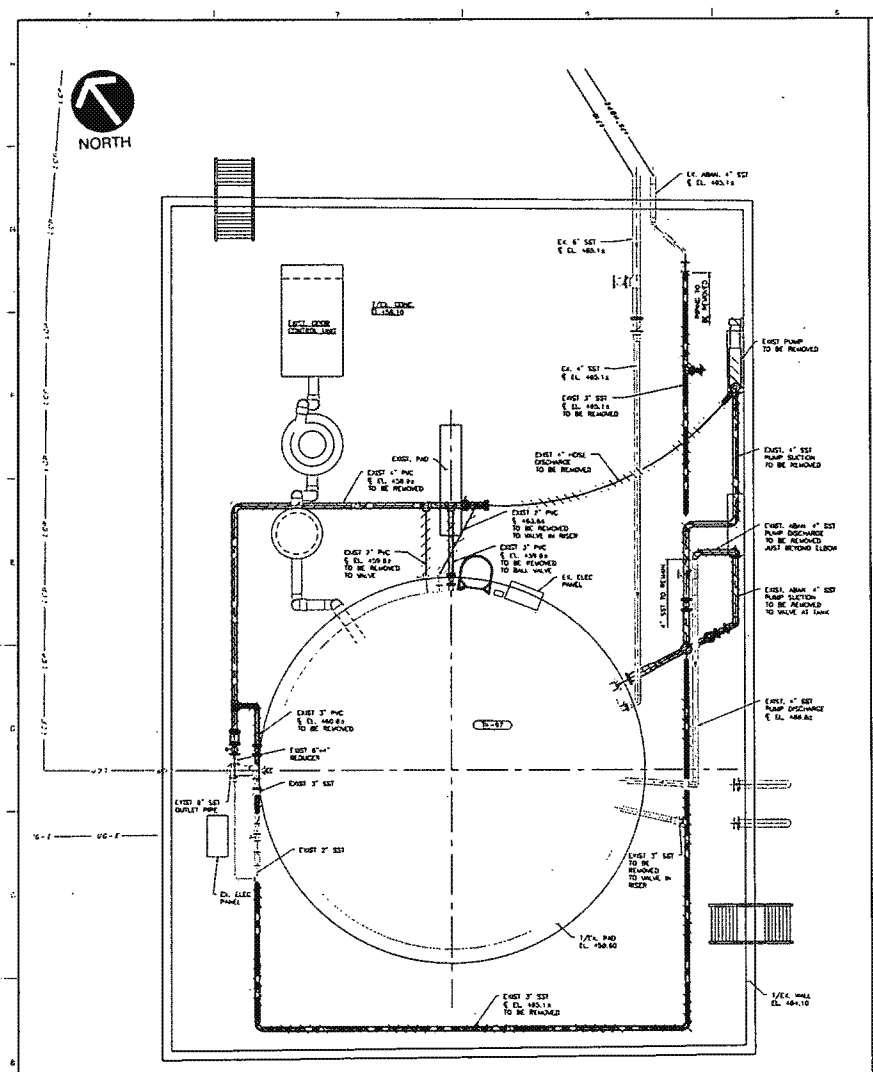

TANK 97 DEMOLITION PLAN
SCALE: 1/4"=1'-0"

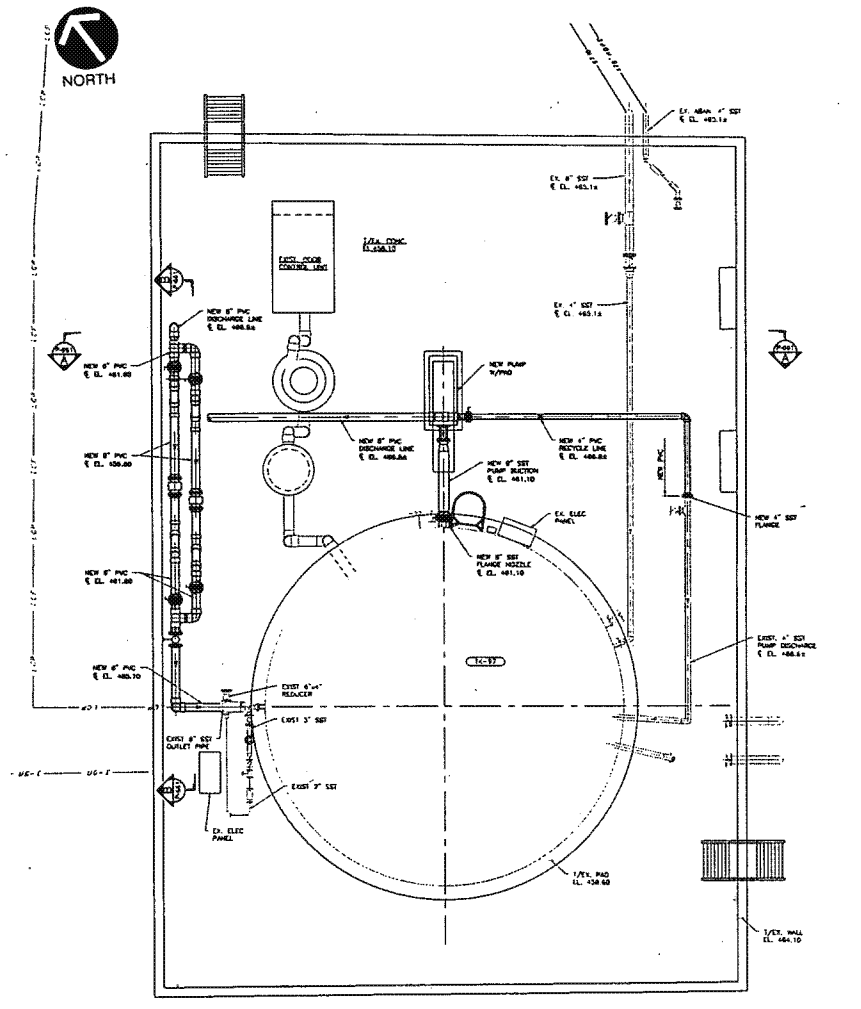

TANK 97 MODIFICATION PLAN
SCALE: 1/4"=1'-0"

NOTE:
LOCATIONS AND ELEVATIONS OF ALL ITEMS ON THIS DRAWING ARE APPROXIMATE. LOCATIONS AND ELEVATIONS MUST BE FIELD VERIFIED PRIOR TO NEW CONSTRUCTION.

PRELIMINARY
NOT FOR CONSTRUCTION

0 1 2 4 6
1/4"=1'-0"

REVISION RECORD

Civil & Environmental Consultants, Inc.
4848 Park 370 Blvd., Suite F - Hazelwood, MO 63042
314-656-4566 - 866-250-3879
www.cecinc.com

BRIDGETON LANDFILL, LLC
13570 ST. CHARLES ROCK ROAD
BRIDGETON, MO 63044
PHONE: (314) 744-8195
FAX: (314) 656-2107

BRIDGETON LANDFILL
13570 ST. CHARLES ROCK ROAD
TREATMENT PROCESS MODIFICATIONS
TANK 97 PLANS

DATE: JUNE 2018 | DRAWN BY: JOG
DWG SCALE: 1/4" = 1'-0" | CHECKED BY: DRAFT
PROJECT NO: 130-464
APPROVED BY: DRAFT

DRAWING NO.: P-550

MSD 033219

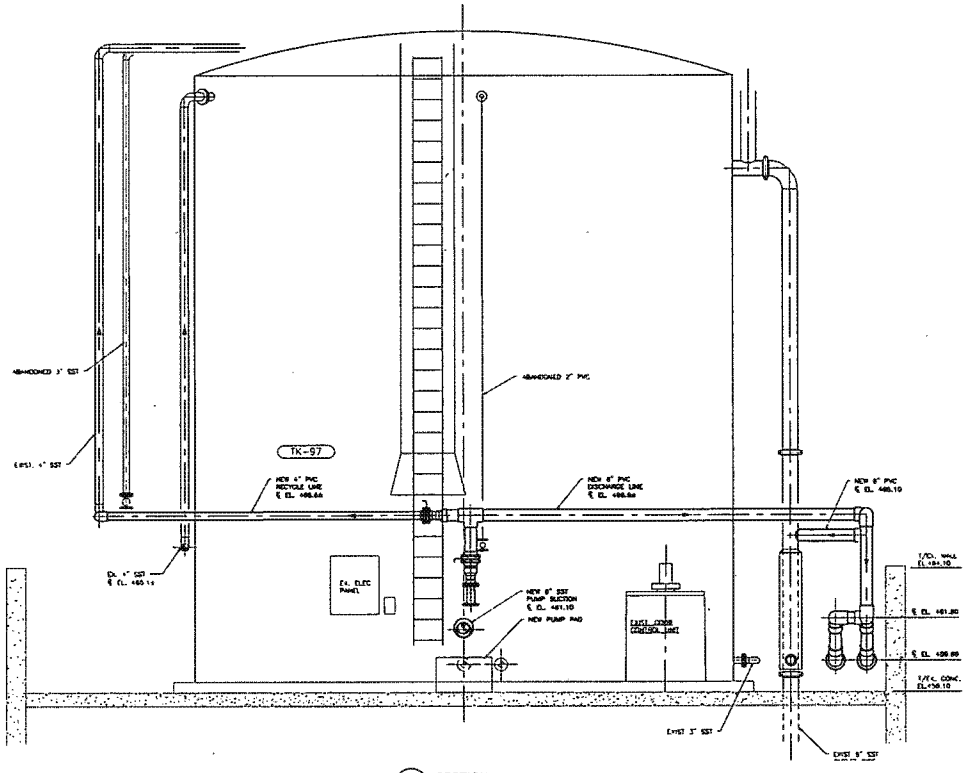

A SECTION
P-550 SCALE: 3/8"=1'-0"

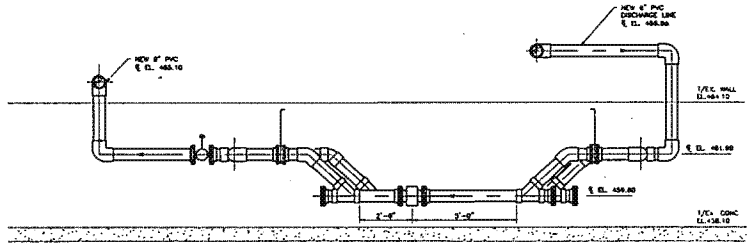

B SECTION
P-550 SCALE: 3/8"=1'-0"

NOTE:
LOCATIONS OF ALL ITEMS ON THIS DRAWING ARE APPROXIMATE. LOCATIONS MUST BE FIELD VERIFIED PRIOR TO NEW CONSTRUCTION.

PRELIMINARY
NOT FOR CONSTRUCTION

0 1 2 4
3/8"=1'-0"

REVISION RECORD

NO	DATE	DESCRIPTION
1	----	----
2	----	----
3	----	----
4	----	----
5	----	----
6	----	----
7	----	----
8	----	----

Civil & Environmental Consultants, Inc.
4848 Park 370 Blvd., Suite F · Hazelwood, MO 63042
314-838-4560 · 866-250-2879
www.cecinc.com

BRIDGETON LANDFILL, LLC
13570 ST. CHARLES ROCK ROAD
BRIDGETON, MO 63044
PHONE: (314) 744-8195
FAX: (314) 656-2107

BRIDGETON LANDFILL
13570 ST. CHARLES ROCK ROAD
TREATMENT PROCESS MODIFICATIONS
TANK 97 MODIFICATION SECTIONS

DATE: JUNE 2013	DRAWN BY: JCC
DWG SCALE: AS NOTED	CHECKED BY: DRAFT
PROJECT NO:	130-144
APPROVED BY:	DRAFT

P-551

MSD 033220

Bridgeton Landfill

Doug Mendoza

From: LaFata, Natalie <nlafata@cecinc.com>
Sent: Monday, November 23, 2015 10:29 AM
To: Doug Mendoza; Rob G Daly; Mark Bright; Ken Gambaro
Cc: Kamp, Kevin; Graves, Stephen; Power, Brian
Subject: RE: Bridgeton LPTP Discharge Data - COD jump??

Doug,
The increase in COD that was noted was due to an unexpected increase in the influent concentration. The COD has returned to a value that is more representative of what we have seen recently.
The increase in TSS is likely to be a laboratory anomaly. Looking at the data from November 16th, the Permeate that the plant produced at the Ultrafilters shows consistency with the Permeate analysis prior to and following the 16th. The only data that showed discrepancy that specific was the Manhole (discharge). We normally see TSS in the 10-30 mg/L range.

Please feel free to contact us if you or anyone has any further questions. We are continuing to provide the daily effluent updates as requested.

Natalie L. La Fata / Plant Manager
Civil & Environmental Consultants, Inc.
4848 Park 370 Blvd., Suite F · Hazelwood, MO 63042
Toll Free: (866) 250-3679 ext. 3626 · Fax: (314) 656-4595
Mobile: (314) 341-3375 · http://www.cecinc.com
Senior Leadership · Integrated Services · Personal Business Relationships

This electronic communication and any attachments are intended solely for the use of the person or entity to which it is addressed, and may contain information that is confidential, privileged and exempt from disclosure under applicable law, including copyright law. If you are not the intended recipient of this message, you are prohibited from disclosing, reproducing, distributing, disseminating or otherwise using this transmission. Please promptly notify the sender by reply electronic communication and immediately delete this message from your system.

From: Doug Mendoza [mailto:DMENDOZA@stlmsd.com]
Sent: Wednesday, November 18, 2015 12:34 PM
To: LaFata, Natalie; Rob G Daly; Mark Bright; Ken Gambaro
Cc: Kamp, Kevin; Graves, Stephen; Power, Brian
Subject: RE: Bridgeton LPTP Discharge Data - COD jump??

Natalie,

What happened to make the COD jump like it is for the last 2 days? Same for the TSS jump for 11/16?

---Doug

From: LaFata, Natalie [mailto:nlafata@cecinc.com]
Sent: Wednesday, November 18, 2015 11:56 AM
To: Doug Mendoza; Rob G Daly; Mark Bright; Ken Gambaro
Cc: Kamp, Kevin; Graves, Stephen; Power, Brian
Subject: Bridgeton LPTP Discharge Data

Date	Flow	COD	TSS
11/13/2015	234043	2360	9.5
11/14/2015	223900	2760	19.5

m

Doug Mendoza Bridgeton Landfill

From: LaFata, Natalie <nlafata@cecinc.com>
Sent: Sunday, November 22, 2015 9:16 PM
To: Doug Mendoza; Rob G Daly; Mark Bright; Ken Gambaro
Cc: Kamp, Kevin; Graves, Stephen; Power, Brian
Subject: Bridgeton LPTP Discharge Data

Date	Flow	COD	TSS
11/13/2015	234043	2360	9.5
11/14/2015	223900	2760	19.5
11/15/2015	215087	3020	26.5
11/16/2015	212222	4230	75
11/17/2015	190121	4570	25
11/18/2015	127348	3230	33.5
11/19/2015	127095	3470	26.5
11/20/2015	165,043	2590	10.5
11/21/2015	216,491	2310	10.5

Here is the operational discharge data for the Bridgeton LPTP

Natalie L. La Fata / Plant Manager
Civil & Environmental Consultants, Inc.
4848 Park 370 Blvd., Suite F · Hazelwood, MO 63042
Toll Free: (866) 250-3679 ext. 3626 · Fax: (314) 656-4595
Mobile: (314) 341-3375 · http://www.cecinc.com
Senior Leadership · Integrated Services · Personal Business Relationships

This electronic communication and any attachments are intended solely for the use of the person or entity to which it is addressed, and may contain information that is confidential, privileged and exempt from disclosure under applicable law, including copyright law. If you are not the intended recipient of this message, you are prohibited from disclosing, reproducing, distributing, disseminating or otherwise using this transmission. Please promptly notify the sender by reply electronic communication and immediately delete this message from your system.

Bridgeton Landfill

Doug Mendoza

From: LaFata, Natalie <nlafata@cecinc.com>
Sent: Friday, November 20, 2015 2:34 PM
To: Rob G Daly; Mark Bright; Mike Waxman; Doug Mendoza; Jeff Jones; Kevin George
Cc: O'Leary, Kevin; Graves, Stephen; Kamp, Kevin; Kohrt, Mark; bpower@republicservices.com; LaFata, Natalie
Subject: Plant Update 11-20-2015

The daily discharge amounts since the last Force Main/Plant Update:

Date	Flow
11/13/2015	234043
11/14/2015	223900
11/15/2015	215087
11/16/2015	212222
11/17/2015	190121
11/18/2015	127348
11/19/2015	127095

- There is a 1 million gallon aeration tank in the cleaning process at the plant. This will not affect the treatment plants production to MSD.
- The discharge is being diverted to the MoRiver Treatment Facility as of 12-13-2015. Daily operational information is being sent which was requested by MSD.
- Sodium Nitrate dosing is at 400gpd and Ferric Chloride is being introduced to the discharge manhole 013 at 0.6gph at this time. This is being maintained.
- There have not been any significant changes within the treatment plant process this week.

Any questions, please feel free to contact me!

Have a great weekend!!

Natalie L. La Fata / Plant Manager
Civil & Environmental Consultants, Inc.
4848 Park 370 Blvd., Suite F · Hazelwood, MO 63042
Toll Free: (866) 250-3679 ext. 3626 · Fax: (314) 656-4595
Mobile: (314) 341-3375 · http://www.cecinc.com
Senior Leadership · Integrated Services · Personal Business Relationships

This electronic communication and any attachments are intended solely for the use of the person or entity to which it is addressed, and may contain information that is confidential, privileged and exempt from disclosure under applicable law, including copyright law. If you are not the intended recipient of this message, you are prohibited from disclosing, reproducing, distributing, disseminating or otherwise using this transmission. Please promptly notify the sender by reply electronic communication and immediately delete this message from your system.

Doug Mendoza

From: Doug Mendoza
Sent: Friday, November 20, 2015 7:35 AM
To: John Lodderhose
Subject: Comparison of radiochemical analytical results from the Bridgeton Landfill pump station spill and the sample of Bridgeton Landfill's treated leachate

John,

Here is a comparison of radiochemical analytical results from the Bridgeton Landfill pump station spill and the sample of Bridgeton Landfill's treated leachate. I think it points out the difficulties and variability with radiochemical analyses.

---Doug

10/27/15 Bridgeton Landfill PS1 SPILL	**10/27/15 Bridgeton Landfill SP013 LEACHATE**
Gross Alpha <2.88 pCi/L Gross Beta 11.6 pCi/L Gross Gamma 847.259 pCi/L Radium-226 <0.528 pCi/L Radium-228 <0.856 pCi/L Thorium-230 <0.438 pCi/L Uranium-natural <0.534 pCi/L Total Uranium 0.577 ug/L	Gross Alpha <52.2 pCi/L Gross Beta 137 pCi/L Gross Gamma 81.034 pCi/L Radium-226 <1.54 pCi/L Radium-228 <0.948 pCi/L Thorium-230 <0.714 pCi/L Uranium-natural 0.639 pCi/L Total Uranium 0.530 ug/L
Gross Alpha **2.25 ± 1.72 (2.88)** Gross Beta **11.6 ± 2.56 (1.94)**	Gross Alpha **6.81 ± 27.2 (52.2)** Gross Beta **137 ± 30.7 (24.9)**
Actinium-228 **10.467 ± 26.263 (33.510)** Bismuth-212 **28.705 ± 92.994 (107.500)** Bismuth-214 **360.890 ± 52.482 (21.270)** Lead-212 **91.439 ± 33.163 (21.050)** Lead-214 **394.930 ± 54.955 (22.220)** Potassium-40 **13.220 ± 113.710 (148.900)** Radium-226 **35.779 ± 212.530 (267.400)** Radium-228 **10.467 ± 26.263 (33.510)** Thallium-208 **0.000 ± 6.181 (15.460)** Thorium-234 **28.708 ± 332.540 (414.000)** Uranium-235 **39.416 ± 66.352 (80.420)**	Actinium-228 **0.000 ± 8.026 (46.610)** Bismuth-212 **0.000 ± 46.034 (137.500)** Bismuth-214 **48.944 ± 17.186 (16.750)** Lead-212 **8.861 ± 13.747 (16.880)** Lead-214 **32.090 ± 13.839 (14.750)** Potassium-40 **151.240 ± 156.380 (174.100)** Radium-226 **0.000 ± 92.696 (210.700)** Radium-228 **0.000 ± 8.026 (46.610)** Thallium-208 **3.373 ± 8.622 (10.700)** Thorium-234 **24.996 ± 216.420 (277.400)** Uranium-235 **0.000 ± 21.862 (65.720)**
Radium-226 **0.430 ± 0.401 (0.528)** Radium-228 **0.294 ± 0.401 (0.856)**	Radium-226 **0.938 ± 1.11 (1.54)** Radium-228 **-0.112 ± 0.399 (0.948)**
Total Uranium **0.577 ± 0.015 (0.193)**	Total Uranium **0.530 ± 0.024 (0.385)**
Thorium-230 **0.037 ± 0.215 (0.438)**	Thorium-230 **0.000 ± 0.349 (0.714)**
Uranium-234 **0.076 ± 0.278 (0.534)** Uranium-235 **0.148 ± 0.257 (0.459)** Uranium-238 **0.076 ± 0.257 (0.496)**	Uranium-234 **0.639 ± 0.323 (0.261)** Uranium-235 **0.093 ± 0.212 (0.126)** Uranium-238 **0.213 ± 0.243 (0.382)**

Doug Mendoza

From: Paceport Email Notification <carin.ferris@pacelabs.com>
Sent: Thursday, November 19, 2015 4:00 PM
To: Doug Mendoza; carin.ferris@pacelabs.com
Subject: Bridgeton Landfill (Pace Project # 30163507)
Attachments: 30163507_frc.pdf

CB
12-10

Paceport Login

Pace Automated Email Notification

This email contains EDDs and Reports generated by Paceport's automated deliverable service. The attached files have been authorized to be sent to you due to the completion of project Bridgeton Landfill (Pace Project # 30163507). Your Pace project manager has been CC'ed on this email so that you may request any further assistance.

To access this project's page in paceport click on the following link.
http://paceport.pacelabs.com/ClientPortal/mvc/projectDetails/modelAndView?projectID=30163507&systemID=lims30

Copyright © 2012 Pace Analytical Services, Inc

The email and documents accompanying this transmission contain confidential information belonging to the sender who is legally privileged. The information is intended only for the use of the individual(s) or entity(ies) named herein. If you are not the intended recipient, you are hereby notified that any disclosure, copying distribution or the taking of any action in reliance on the contents of this information is strictly prohibited. If you have received this in error, please immediately notify us by telephone (1.888.990.PACE) to arrange for return of the original documents.

Pace Analytical
www.pacelabs.com

Pace Analytical Services, Inc.
1638 Roseytown Road - Suites 2,3,4
Greensburg, PA 15601
(724)850-5600

ANALYTICAL RESULTS - RADIOCHEMISTRY

Project: Bridgeton Landfill
Pace Project No.: 30163507

Sample: Bridgeton Landfill **Lab ID: 30163507001** Collected: 10/27/15 09:08 Received: 10/29/15 10:15 Matrix: Water
PWS: Site ID: Sample Type:

Comments:
- Sample collection times were not present on the sample containers.
- Upon receipt at the laboratory, six mls of nitric acid were added to the sample to meet the sample preservation requirement of pH <2 for radiochemistry analysis.

Parameters	Method	Act ± Unc (MDC) Carr Trac	Units	Analyzed	CAS No.	Qual
Gross Alpha	EPA 900.0	**6.81 ± 27.2 (52.2)** **C:NA T:NA**	pCi/L	11/13/15 22:36	12587-46-1	
Gross Beta	EPA 900.0	**137 ± 30.7 (24.9)** **C:NA T:NA**	pCi/L	11/13/15 22:36	12587-47-2	
Actinium-228	EPA 901.1	**0.000 ± 8.026 (46.610)** **C:NA T:NA**	pCi/L	11/19/15 10:46	14331-83-0	
Bismuth-212	EPA 901.1	**0.000 ± 46.034 (137.500)** **C:NA T:NA**	pCi/L	11/19/15 10:46	14913-49-6	
Bismuth-214	EPA 901.1	**48.944 ± 17.186 (16.750)** **C:NA T:NA**	pCi/L	11/19/15 10:46	14733-03-0	
Lead-212 (Gross Gamma=81.034)	EPA 901.1	**8.861 ± 13.747 (16.880)** **C:NA T:NA**	pCi/L	11/19/15 10:46	15092-94-1	
Lead-214	EPA 901.1	**32.090 ± 13.839 (14.750)** **C:NA T:NA**	pCi/L	11/19/15 10:46	15067-28-4	
Potassium-40	EPA 901.1	**151.240 ± 156.380 (174.100)** **C:NA T:NA**	pCi/L	11/19/15 10:46	13966-00-2	
Radium-226	EPA 901.1	**0.000 ± 92.696 (210.700)** **C:NA T:NA**	pCi/L	11/19/15 10:46	13982-63-3	
Radium-228	EPA 901.1	**0.000 ± 8.026 (46.610)** **C:NA T:NA**	pCi/L	11/19/15 10:46	15262-20-1	
Thallium-208	EPA 901.1	**3.373 ± 8.622 (10.700)** **C:NA T:NA**	pCi/L	11/19/15 10:46	14913-50-9	
Thorium-234	EPA 901.1	**24.996 ± 216.420 (277.400)** **C:NA T:NA**	pCi/L	11/19/15 10:46	15065-10-8	
Uranium-235	EPA 901.1	**0.000 ± 21.862 (65.720)** **C:NA T:NA**	pCi/L	11/19/15 10:46	15117-96-1	
Radium-226	EPA 903.1	**0.938 ± 1.11 (1.54)** **C:NA T:92%**	pCi/L	11/17/15 13:46	13982-63-3	
Radium-228	EPA 904.0	**-0.112 ± 0.399 (0.948)** **C:74% T:77%**	pCi/L	11/12/15 11:59	15262-20-1	
Total Uranium	ASTM D5174-97	**0.530 ± 0.024 (0.385)** **C:NA T:NA**	ug/L	11/19/15 16:11	7440-61-1	
Thorium-230	HSL-300	**0.000 ± 0.349 (0.714)** **C:NA T:72%**	pCi/L	11/06/15 13:27	14269-63-7	N2
Uranium-234 (Unat=0.639)	HSL-300	**0.639 ± 0.323 (0.261)** **C:NA T:91%**	pCi/L	11/06/15 13:23	13966-29-5	N2
Uranium-235	HSL-300	**0.093 ± 0.212 (0.126)** **C:NA T:91%**	pCi/L	11/06/15 13:23	15117-96-1	N2
Uranium-238	HSL-300	**0.213 ± 0.243 (0.382)** **C:NA T:91%**	pCi/L	11/06/15 13:23		N2

REPORT OF LABORATORY ANALYSIS

This report shall not be reproduced, except in full,
without the written consent of Pace Analytical Services, Inc..

Pace Analytical®
www.pacelabs.com

CHAIN-OF-CUSTODY / Analytical Request Document

The Chain-of-Custody is a LEGAL DOCUMENT. All relevant fields must be completed accurately.

Page: of

1890274

Section A Required Client Information:	Section B Required Project Information:	Section C Invoice Information:
Company: MSD	Report To: Mr. Doug Mendoza	Attention:
Address: 10 E Grand. St. Louis, MO 63147	Copy To:	Company Name:
		Address:
Email To: dmendoza@stlmsd.com	Purchase Order No.:	Pace Quote Reference:
Phone: 314-436-8717 Fax: 314-436-8753	Project Name:	Pace Project Manager:
Requested Due Date/TAT:	Project Number:	Pace Profile #:

REGULATORY AGENCY

☐ NPDES ☐ GROUND WATER ☐ DRINKING WATER
☐ UST ☐ RCRA ☒ OTHER Wastewater

Site Location STATE:

Section D Required Client Information

Matrix Codes MATRIX / CODE: Drinking Water DW, Water WT, Waste Water WW, Product P, Soil/Solid SL, Oil OL, Wipe WP, Air AR, Tissue TS, Other OT

SAMPLE ID (A-Z, 0-9 / ,-) Sample IDs MUST BE UNIQUE

Requested Analysis Filtered (Y/N)

ITEM #	SAMPLE ID	MATRIX CODE (see valid codes to left)	SAMPLE TYPE (G=GRAB C=COMP)	COLLECTED COMPOSITE START DATE	COLLECTED COMPOSITE START TIME	COLLECTED COMPOSITE END/GRAB DATE	COLLECTED COMPOSITE END/GRAB TIME	SAMPLE TEMP AT COLLECTION	# OF CONTAINERS	Preservatives: Unpreserved	H_2SO_4	HNO_3	HCl	NaOH	$Na_2S_2O_3$	Methanol	Other	Analysis Test (Y/N)	Radium-226	Radium-228	Gross Alpha	Gross Beta	Gross Gamma	Uranium Natural	Thorium-230	Uranium (ug/l)	30	Attachment	Residual Chlorine (Y/N)	Pace Project No./ Lab I.D.
1	Bridgeton Landfill	OT	C	10/26/15	9:20	10/27/15	9:28		5			X																			001
2																															
3																															
4																															
5																															
6																															
7																															
8																															
9																															
10																															
11																															
12																															

ADDITIONAL COMMENTS	RELINQUISHED BY / AFFILIATION	DATE	TIME	ACCEPTED BY / AFFILIATION	DATE	TIME	SAMPLE CONDITIONS: Temp in °C	Received on Ice (Y/N)	Custody Sealed Cooler (Y/N)	Samples Intact (Y/N)
	[signature]	10-27-15	13:40	[signature]	10-29-15	1015	N/A	N	N	Y

ORIGINAL

SAMPLER NAME AND SIGNATURE

PRINT Name of SAMPLER: Jason Edwards

SIGNATURE of SAMPLER: [signature]

DATE Signed (MM/DD/YY): 10/27/15

*Important Note: By signing this form you are accepting Pace's NET 30 day payment terms and agreeing to late charges of 1.5% per month for any invoices not paid within 30 days.

F-ALL-Q-020rev.07, 15-May-2007

30163507

Brian G. Gibson

The particular radioactivity/radionuclides we need tested for each set are:

- Radium-226 (pci/L)
- Radium-228 (pci/L)
- Gross Alpha (pci/L)
- Gross Beta (pci/L)
- Gross Gamma (pci/L)
  - Consisting of
    - Actinium-228 (pci/L)
    - Bismuth-212 (pci/L)
    - Bismuth-214 (pci/L)
    - Lead-212 (pci/L)
    - Lead-214 (pci/L)
    - Potassium-40 (pci/L)
    - Radium-226 (pci/L)
    - Radium-228 (pci/L)
    - Thallium-208 (pci/L)
    - Thorium-234 (pci/L)
    - Uranium-235 (pci/L)
- Uranium-natural (pci/L)
  - Consisting of
    - Uranium-234 (pci/L)
    - Uranium-235 (pci/L)
    - Uranium-238 (pci/L)
  - I understand that you likely will simply analyze for the three isotopes, and MSD itself will sum them for the U-natural total
- **Thorium-230 (pci/L)**
  - **This is a new one we just added**
- Uranium, in concentration(ug/L)

Brian Gibson
Metropolitan St. Louis Sewer District
Division of Environmental Compliance
10 East Grand Avenue
St. Louis, MO 63147-2913
(314) 436-8784
bgibson@stlmsd.com

Pace Analytical

Sample Condition Upon Receipt

30163507

Client Name: MSD

Project # _____

PAS

Courier: ☐ Fed Ex ☒ UPS ☐ USPS ☐ Client ☐ Commercial ☐ Pace Other _____

Tracking #: 1Z21Y16R0397704200

Custody Seal on Cooler/Box Present: ☐ yes ☒ no Seals Intact: ☐ yes ☐ no Biological Tissue is Frozen: Yes No

Packing Material: Bubble Wrap X Bubble Bags ____ None ____ Other _____

Thermometer Used N/A Type of Ice: Wet Blue None ☐ Samples on ice, cooling process has begun

Cooler Temp.: Observed Temp.:_____°C Correction Factor: _____°C Final Temp:_____°C

Date and initials of person examining contents: 10-29-15 AJV

Temp should be above freezing to 6°C

				Comments:
Chain of Custody Present:	☒Yes	☐No	☐N/A	1.
Chain of Custody Filled Out:	☒Yes	☐No	☐N/A	2.
Chain of Custody Relinquished:	☒Yes	☐No	☐N/A	3.
Sampler Name & Signature on COC:	☒Yes	☐No	☐N/A	4.
Samples Arrived within Hold Time:	☒Yes	☐No	☐N/A	5.
Short Hold Time Analysis (<72hr):	☐Yes	☒No	☐N/A	6.
Rush Turn Around Time Requested:	☐Yes	☒No	☐N/A	7.
Sufficient Volume:	☒Yes	☐No	☐N/A	8.
Correct Containers Used:	☒Yes	☐No	☐N/A	9.
-Pace Containers Used:	☒Yes	☐No	☐N/A	
Containers Intact:	☒Yes	☐No	☐N/A	10.
Filtered volume received for Dissolved tests	☐Yes	☐No	☒N/A	11.
Sample Labels match COC: -Includes date/time/ID/Analysis Matrix: WT	☐Yes	☒No	☐N/A	12. no time on samples but on COC sample is a WT but contains a little oil
All containers needing preservation have been checked.	☒Yes	☐No	☐N/A	13. Added 5ml HNO_3 to all samples 10-29-15 1230
All containers needing preservation are found to be in compliance with EPA recommendation.	☒Yes	☐No	☐N/A	
exceptions: VOA, coliform, TOC, O&G, Phenols	☐Yes	☒No		Initial when completed: AJV Lot # of added preservative: N15-0963
Samples checked for dechlorination:	☐Yes	☐No	☒N/A	14.
Headspace in VOA Vials (>6mm):	☐Yes	☐No	☒N/A	15.
Trip Blank Present:	☐Yes	☐No	☒N/A	16.
Trip Blank Custody Seals Present	☐Yes	☐No	☒N/A	
Pace Trip Blank Lot # (if purchased): _____				

Client Notification/ Resolution: Field Data Required? Y / N

Person Contacted: _____ Date/Time: _____

Comments/ Resolution: _____

Project Manager Review: [signature] **Date:** 10/30/15

Note: Whenever there is a discrepancy affecting North Carolina compliance samples, a copy of this form will be sent to the North Carolina DEHNR Certification Office (i.e out of hold, incorrect preservative, out of temp, incorrect containers)

30163507

Pace Analytical

Project Number: _____

Client Name: MSD

Item No.	Matrix Code	Glass Jar (120 / 250 / 500 / 1L)	Soil kit (2 SB, 1M, soil jar)	Chemistry (250 / 500 / 1L)	Organics (1L)	Nutrient (250 / 500)	Phenolics (250 ml)	TOC (40 ml / 250 ml)	TOX (250 ml)	Total Metals	Dissolved Metals preserved Y N	O & G (1L)	TPH (1L)	VOA (40 ml 30 ml)	Cyanide (250 ml)	Sulfide (500 ml)	Bacteria (120 ml)	Wipes / swipe/ smear/ filter	Radchem Nalgene (125 / 250 / 500 (1L))	Radchem Nalgene (1/2 gal. / 1 gal.L)	Cubitainer (500 ml / 4L)	Ziploc	Other	Other
001	WT																		5					

SCURF Back (C016-4 15May2012).xls

Dea

Doug Mendoza

From: Doug Mendoza
Sent: Thursday, November 19, 2015 8:42 AM
To: Power, Brian <BPower@republicservices.com> (BPower@republicservices.com) (BPower@republicservices.com)
Subject: FW: Bridgeton Landfill flows - Installation of new flow measuring flume

Brian,

I have not yet received any response. Would you please get one submitted to us?

Thanks,
Doug Mendoza
MSD Industrial Pretreatment Manager

From: Doug Mendoza
Sent: Monday, November 16, 2015 8:49 AM
To: 'Graves, Stephen'; 'Ed Galbraith'
Cc: 'Kamp, Kevin'; 'LaFata, Natalie'; 'Bouchard, Derek (DBouchard@republicservices.com)'; 'Kelly Caddy'
Subject: RE: Bridgeton Landfill flows - Installation of new flow measuring flume

Steve,

Would you please let me know where this stands as far as timing?

From item 2 below:

> A new flume and measuring instrument is in the process of being specified and purchased and will be installed immediately upon receipt. The flume will be installed at ground level where it can be visually monitored and easily cleaned thus keeping not only the precision but the accuracy of the measurement correct at all times. This project should be completed by mid-November.

Thanks,
Doug Mendoza
MSD Industrial Pretreatment Manager

From: Doug Mendoza
Sent: Friday, October 02, 2015 8:56 AM
To: 'Graves, Stephen'; 'Ed Galbraith'
Cc: Kamp, Kevin; LaFata, Natalie; Bouchard, Derek (DBouchard@republicservices.com); Kelly Caddy
Subject: RE: Bridgeton Landfill flows

Steve,

Thank you for the additional information. Regarding item 5 below, the monthly volume reports will need to include separate columns for the metered leachate discharge and the potable water introduced at SP013. Since the potable water enters downstream from the leachate metering, and MSD does not bill for any of the incoming potable water, we will need to separately add any volume charge for this discharged potable water. However, it appears that the extra volume should be minimal going forward.

Bridgeton Landfill

Doug Mendoza

From: Doug Mendoza
Sent: Thursday, November 19, 2015 8:41 AM
To: Power, Brian <BPower@republicservices.com> (BPower@republicservices.com) (BPower@republicservices.com)
Subject: FW: BRIDGETON PS2, RISER PIPE REPAIR , BENZENE EVENT.
Attachments: BRIDGETON PS2 PUMP RISER REPAIR EVENT.csv

Brian,

I have not yet received any response. Would you please get one submitted to us?

Thanks,
Doug Mendoza
MSD Industrial Pretreatment Manager

From: Doug Mendoza
Sent: Thursday, November 12, 2015 10:38 AM
To: Ed Galbraith (EGalbraith@barr.com) (EGalbraith@barr.com); Power, Brian <BPower@republicservices.com> (BPower@republicservices.com) (BPower@republicservices.com)
Cc: Rob G Daly; Jay Kniker; Mark Bright; John Lodderhose
Subject: FW: BRIDGETON PS2, RISER PIPE REPAIR , BENZENE EVENT.

Ed & Brian,

I was recently informed that data collected at Bridgeton PS No. 2 site on October 28, using MSD's benzene tuned PID, showed benzene concentrations in the atmosphere. See the attached spreadsheet for details. The peak was 302 ppb, with an average of 61 ppb over roughly and hour. This was without ventilation turned on.

Our concern is that we were not expecting to see any benzene, based on recent historical readings of benzene in Bridgeton Landfill's leachate discharge.

SP	DATE	POLLUTANT	<	RESULT	UNIT	SAMPLER
013	10/15/2015	Benzene	<	1	ug/L	Industry
013	9/15/2015	Benzene	<	10	ug/L	Industry
013	8/27/2015	Benzene	<	10	ug/L	MSD
013	8/18/2015	Benzene	<	10	ug/L	Industry
013	7/21/2015	Benzene	<	20	ug/L	Industry
013	7/17/2015	Benzene	<	10	ug/L	MSD

Would you please check with your personnel and see if something specific occurred around that timeframe or has recently changed in general? As I'm sure you understand, our field personnel are very sensitive to any benzene levels in wastewater or the atmosphere surrounding the wastewater.

Sincerely,
Doug Mendoza
MSD Industrial Pretreatment Manager

Doug Mendoza

From: Ed Galbraith <EGalbraith@barr.com>
Sent: Monday, November 16, 2015 11:20 AM
To: Doug Mendoza
Cc: Kelly Caddy; Bouchard, Derek (DBouchard@republicservices.com)
Subject: RE: Bridgeton Landfill Monthly Report 11/11/2015

Doug, a revised spreadsheet has been posted with the potable water flow added back in. There have been no additional potable water flows since the October report.

ftp://ftp.barr.com/bridgetonlandfill/2015%20Reports/2015_1111/Excel%20Spreadsheets/

Ed Galbraith

Senior Environmental Consultant
Jefferson City, MO office: 573.638.5024
cell: 573.418.5562
egalbraith@barr.com
www.barr.com

resourceful. naturally. BARR

From: Doug Mendoza [mailto:DMENDOZA@stlmsd.com]
Sent: Thursday, November 12, 2015 9:33 AM
To: Ed Galbraith
Subject: RE: Bridgeton Landfill Monthly Report 11/11/2015

Ed,

The "Flow Data for Potable Water" column is not included. It was added starting with last month's report (in the column between "Metered Discharge" and "FIT-420 Flow", but apparently was deleted or omitted for this month.

Please have the column added and populated, and resubmit the spreadsheet.

Thanks,
Doug Mendoza
MSD Industrial Pretreatment Manager

From: Ed Galbraith [mailto:EGalbraith@barr.com]
Sent: Tuesday, November 10, 2015 9:16 PM
To: Doug Mendoza; John Lodderhose; Brian G. Gibson; Michael Grace; Nora C. Estopare; Rob G Daly; 'Tippett Mosby, Leanne (Leanne.TippettMosby@dnr.mo.gov)'; 'Aaron Schmidt'; 'Nagel, Chris (Christopher.Nagel@dnr.mo.gov)'; 'bpower@republicservices.com'; 'Getting, James'; 'Bouchard, Derek (DBouchard@republicservices.com)'; 'Kamp, Kevin'; 'LaFata, Natalie'; 'Cooper, Ivan (icooper@cecinc.com)'; 'lwright@cecinc.com'; Kelly Caddy; Dana B. Pasi; Christopher J. Bulmahn; Ken Gambaro; Mike Townley; 'lwright@cecinc.com'; Andrea A. Nord; Becca Coyle; 'koleary@cecinc.com'; 'sgraves@cecinc.com'; 'awyatt@herstassociates.com'
Subject: Bridgeton Landfill Monthly Report 11/11/2015

Metropolitan Saint Louis Sewer District
2350 Market Street
Saint Louis, Missouri 63103-2555

BRIDGETON LANDFILL LLC
13570 St. Charles Rock Road
Bridgeton, MO 63044

Attn: Brian Power
Environmental Manager

INDUSTRIAL WASTEWATER DISCHARGE PERMIT NUMBER 1003803000.

ANNUAL PERMIT FEE NOTICE

For permits in effect as of **10/01/2015**.

Fee will be included in a separate bill from the Metropolitan St. Louis Sewer District.

Explanation of Charges

Fee for Pretreatment Program Discharge Permit covering the period October 1, 2015 through September 30, 2016, issued in accordance with the Metropolitan St. Louis District Ordinance #12413 for the location at **13570 St. Charles Rock Road**.

Base charge @ $150.00 per permit			$150.00
Volume charge @$0.72 per average daily Ccf	237.57	Ccf(s)	171.05
Sample Point Charge @$100.00 per sample point	2	Point(s)	200.00
		Total Fee Due:	**521.05**

For inquiries about the Annual Permit Fee, please call 314-436-8756. For inquiries about payment of the fee, which appears on your monthly bill, please call 1-866-281-5737.

Pm

Doug Mendoza Bridgeton Landfill

From: LaFata, Natalie <nlafata@cecinc.com>
Sent: Friday, November 13, 2015 3:13 PM
To: Rob G Daly; Mark Bright; Mike Waxman; Doug Mendoza; Jeff Jones; Kevin George
Cc: O'Leary, Kevin; Graves, Stephen; Kamp, Kevin; Kohrt, Mark; bpower@republicservices.com; LaFata, Natalie
Subject: Plant Update 11-13-2015

The plant discharge is averaging 200+ GPM. The average amounts since the last Force Main/Plant Update:

Date	Direct Discharge (gallons)
11/6/2015	223,959
11/7/2015	321,733
11/8/2015	236,857
11/9/2015	236,096
11/10/2015	224,604
11/11/2015	230,109
11/12/2015	191,961

- On 11-12-2015, the treatment plant had a reduced discharge for MSD force main/Pumpstation maintenance. The plant resumed full discharge that day.
- There is a 1 million gallon aeration tank in the cleaning process at the plant. This will not affect the treatment plants production to the force main.
- Sodium Nitrate dosing is at 400gpd and Ferric Chloride is being introduced to the discharge manhole 013 at 0.6gph at this time. This is being maintained.
- There have not been any significant changes within the treatment plant process this week.

Any questions, please feel free to contact me!

Have a great weekend!!

Natalie L. La Fata / Plant Manager
Civil & Environmental Consultants, Inc.
4848 Park 370 Blvd., Suite F · Hazelwood, MO 63042
Toll Free: (866) 250-3679 ext. 3626 · Fax: (314) 656-4595
Mobile: (314) 341-3375 · http://www.cecinc.com
Senior Leadership · Integrated Services · Personal Business Relationships

This electronic communication and any attachments are intended solely for the use of the person or entity to which it is addressed, and may contain information that is confidential, privileged and exempt from disclosure under applicable law, including copyright law. If you are not the intended recipient of this message, you are prohibited from disclosing, reproducing, distributing, disseminating or otherwise using this transmission. Please promptly notify the sender by reply electronic communication and immediately delete this message from your system.

Bridgeton Landfill

Doug Mendoza

From: Doug Mendoza
Sent: Thursday, November 12, 2015 10:38 AM
To: Ed Galbraith (EGalbraith@barr.com) (EGalbraith@barr.com); Power, Brian <BPower@republicservices.com> (BPower@republicservices.com) (BPower@republicservices.com)
Cc: Rob G Daly; Jay Kniker; Mark Bright; John Lodderhose
Subject: FW: BRIDGETON PS2, RISER PIPE REPAIR , BENZENE EVENT.
Attachments: BRIDGETON PS2 PUMP RISER REPAIR EVENT.csv

Ed & Brian,

I was recently informed that data collected at Bridgeton PS No. 2 site on October 28, using MSD's benzene tuned PID, showed benzene concentrations in the atmosphere. See the attached spreadsheet for details. The peak was 302 ppb, with an average of 61 ppb over roughly and hour. This was without ventilation turned on.

Our concern is that we were not expecting to see any benzene, based on recent historical readings of benzene in Bridgeton Landfill's leachate discharge.

SP	DATE	POLLUTANT	<	RESULT	UNIT	SAMPLER
013	10/15/2015	Benzene	<	1	ug/L	Industry
013	9/15/2015	Benzene	<	10	ug/L	Industry
013	8/27/2015	Benzene	<	10	ug/L	MSD
013	8/18/2015	Benzene	<	10	ug/L	Industry
013	7/21/2015	Benzene	<	20	ug/L	Industry
013	7/17/2015	Benzene	<	10	ug/L	MSD

Would you please check with your personnel and see if something specific occurred around that timeframe or has recently changed in general? As I'm sure you understand, our field personnel are very sensitive to any benzene levels in wastewater or the atmosphere surrounding the wastewater.

Sincerely,
Doug Mendoza
MSD Industrial Pretreatment Manager

==========

15/10/28 09:07

****

Summary

Unit Name	UltraRAE 3000(PGM-7360)
Unit SN	596-906573
Unit Firmw	V1.20A

Running M	Hygiene Mode
Measure T	Avg
Datalog Mc	Continuous
Datalog Ty	Auto
Diagnostic	No
Stop Reaso	Power Down

Site ID	RAE00000
User ID	1

Begin	10/28/2015 9:07
End	10/28/2015 10:15
Sample Per	60
Number of	68

Sensor	VOC(ppb)
Span	5000
Span 2	N/A
Low Alarm	500
High Alarm	5000
Over Alarm	5000000
STEL Alarm	2500
TWA Alarm	500
Measurem	Benzene
Calibration	9/21/2015 11:59
Peak	N/A
Min	N/A
Average	N/A

****

Datalog

Index	Date/Time	VOC(ppb) (Avg)
1	10/28/2015 9:08	0
2	10/28/2015 9:09	0
3	10/28/2015 9:10	0
4	10/28/2015 9:11	0
5	10/28/2015 9:12	0

6	10/28/2015 9:13	0
7	10/28/2015 9:14	0
8	10/28/2015 9:15	0
9	10/28/2015 9:16	103
10	10/28/2015 9:17	202
11	10/28/2015 9:18	214
12	10/28/2015 9:19	86
13	10/28/2015 9:20	4
14	10/28/2015 9:21	0
15	10/28/2015 9:22	0
16	10/28/2015 9:23	0
17	10/28/2015 9:24	0
18	10/28/2015 9:25	0
19	10/28/2015 9:26	0
20	10/28/2015 9:27	0
21	10/28/2015 9:28	64
22	10/28/2015 9:29	270
23	10/28/2015 9:30	302
24	10/28/2015 9:31	196
25	10/28/2015 9:32	54
26	10/28/2015 9:33	0
27	10/28/2015 9:34	0
28	10/28/2015 9:35	0
29	10/28/2015 9:36	2
30	10/28/2015 9:37	53
31	10/28/2015 9:38	157
32	10/28/2015 9:39	249
33	10/28/2015 9:40	180
34	10/28/2015 9:41	51
35	10/28/2015 9:42	7
36	10/28/2015 9:43	121
37	10/28/2015 9:44	212
38	10/28/2015 9:45	179
39	10/28/2015 9:46	142
40	10/28/2015 9:47	105
41	10/28/2015 9:48	92
42	10/28/2015 9:49	75
43	10/28/2015 9:50	57
44	10/28/2015 9:51	44
45	10/28/2015 9:52	29
46	10/28/2015 9:53	44
47	10/28/2015 9:54	86
48	10/28/2015 9:55	116
49	10/28/2015 9:56	89
50	10/28/2015 9:57	34
51	10/28/2015 9:58	32
52	10/28/2015 9:59	18

	53	10/28/2015 10:00	4
	54	10/28/2015 10:01	6
	55	10/28/2015 10:02	59
	56	10/28/2015 10:03	71
	57	10/28/2015 10:04	44
	58	10/28/2015 10:05	16
	59	10/28/2015 10:06	37
	60	10/28/2015 10:07	57
	61	10/28/2015 10:08	66
	62	10/28/2015 10:09	72
	63	10/28/2015 10:10	25
	64	10/28/2015 10:11	0
	65	10/28/2015 10:12	0
	66	10/28/2015 10:13	0
	67	10/28/2015 10:14	8
	68	10/28/2015 10:15	25
Peak			302
Min			0
Average			61

Doug Mendoza

From: Doug Mendoza
Sent: Thursday, November 12, 2015 9:33 AM
To: 'Ed Galbraith'
Subject: RE: Bridgeton Landfill Monthly Report 11/11/2015

Ed,

The "Flow Data for Potable Water" column is not included. It was added starting with last month's report (in the column between "Metered Discharge" and "FIT-420 Flow", but apparently was deleted or omitted for this month.

Please have the column added and populated, and resubmit the spreadsheet.

Thanks,
Doug Mendoza
MSD Industrial Pretreatment Manager

From: Ed Galbraith [mailto:EGalbraith@barr.com]
Sent: Tuesday, November 10, 2015 9:16 PM
To: Doug Mendoza; John Lodderhose; Brian G. Gibson; Michael Grace; Nora C. Estopare; Rob G Daly; 'Tippett Mosby, Leanne (Leanne.TippettMosby@dnr.mo.gov)'; 'Aaron Schmidt'; 'Nagel, Chris (Christopher.Nagel@dnr.mo.gov)'; 'bpower@republicservices.com'; 'Getting, James'; 'Bouchard, Derek (DBouchard@republicservices.com)'; 'Kamp, Kevin'; 'LaFata, Natalie'; 'Cooper, Ivan (icooper@cecinc.com)'; 'lwright@cecinc.com'; Kelly Caddy; Dana B. Pasi; Christopher J. Bulmahn; Ken Gambaro; Mike Townley; 'lwright@cecinc.com'; Andrea A. Nord; Becca Coyle; 'koleary@cecinc.com'; 'sgraves@cecinc.com'; 'awyatt@herstassociates.com'
Subject: Bridgeton Landfill Monthly Report 11/11/2015

The monthly report including all 013 and 014 sampling and discharge through last week is now posted to the Barr ftp site.

- The BOD result for 014 sample 10/15/2015 (Pace report 60205295) is qualified as estimated because of the precision check of the RPD calculation. The reported result is 1180 mg/l and the laboratory duplicate from the same source sample is 842 mg/l, which gives an RPD of 34% (Lab Limit 17%). The RPD indicates an imprecise result however, the higher result is reported.

The FTP site can be accessed as follows:

Copy this link and paste it into Windows Explorer (NOT Internet Explorer) ftp://ftp.barr.com/bridgetonlandfill/2015%20Reports/
User: blfdata
Password: tran$fer!

Ed Galbraith

Senior Environmental Consultant
Jefferson City office: 573.638.5024
cell: 573.418.5562
egalbraith@barr.com
www.barr.com

File- Bridgeton Landfill

Metropolitan St. Louis Sewer District

(/)

BILLING 1 (866) 281-5737

CUSTOMER SERVICE (314) 768-6260

Caused Determined in Bridgeton Landfill Pump Station Failure

Published on Tuesday, November 10, 2015

The Metropolitan St. Louis Sewer District (MSD) has identified the cause of the sewage overflow that occurred at the Bridgeton Landfill Tuesday afternoon, October 27, 2015.

A technician from MSD discovered the pump station was not operating around 3:00 p.m. after responding to an alarm and being alerted by Bridgeton Landfill staff, who visibly observed the overflow. The pump station stopped operating as a result of a buildup of material that clogged up the valves and other mechanical components within the pump station.

When the sewage overflow was discovered coming out of a manhole near the pump station, MSD took a proactive approach by hiring a contractor to help speed up the work with the containment and cleanup of the sewage overflow. The rapid response by the contractor and MSD crews helped to contain the sewage overflow to a relatively small area on Bridgeton Landfill property.

This pump station, located on Bridgeton Landfill property, takes sewage from Bridgeton Landfill's pre-treatment facility and puts it into a force main that eventually leads to the Bissell Point Wastewater Treatment Plant located along the Mississippi River.

MSD collected samples from the sewage overflow and sent them to laboratories for testing. The testing will match the

testing parameters MSD normally uses for the Bridgeton Landfill and includes metals, organic chemicals, and radionuclides. Given the extensive nature of this testing, full results will not be available until mid-November. Testing results for organic chemicals and metals, which are available now, indicate that the overflow did not pose a threat to public health for these pollutants. When the full results are available, they will be made public.

In addition to 24/7 electronic alarm monitoring, MSD performs monthly inspections of the pump station. As a result of this overflow event, and as a measure designed to lower the risk of a similar event re-occurring, MSD has increased its frequency of inspections for this the pump station to weekly. The most recent inspection prior to this sewage overflow was conducted on October 5, 2015. At that time, no visible signs of an issue were discovered.

MSD understands the community's concerns about the Bridgeton Landfill and its operations. MSD will continue to publically share further information on this incident as it becomes available.

(http://www.knowyourzone.org/)

(/blog)(https://www.flickr.com/photos/yourmsd/)(https://www.youtube.com/yourmsd)(https://twitter.com/YourMSD)

Privacy Policy (/privacy-policy) | Site Map (/sitemap) | Terms of Use (/terms-use) | Search (/search)

© 2015 Metropolitan St. Louis Sewer District All rights reserved.

Doug Mendoza

Bridgeton Landfill

From: LaFata, Natalie <nlafata@cecinc.com>
Sent: Friday, November 06, 2015 4:26 PM
To: Rob G Daly; Mark Bright; Mike Waxman; Doug Mendoza; Jeff Jones; Kevin George
Cc: O'Leary, Kevin; Graves, Stephen; Kamp, Kevin; Kohrt, Mark; bpower@republicservices.com; LaFata, Natalie
Subject: Plant Update 11-06-2015

The plant discharge is averaging 200+ GPM. The average amounts since the last Force Main/Plant Update:

Date	Direct Discharge (gallons)
10/30/2015	222,043
10/31/2015	233,685
11/1/2015	236,820
11/2/2015	219,930
11/3/2015	241,326
11/4/2015	151,826
11/5/2015	248,902

- On 11-04-2015, the treatment plant had reduced discharge for plant maintenance. The plant resumed full discharge that day.
- There is another 1 million gallon aeration tank in the cleaning process at the plant this week. This will not affect the treatment plants production to the force main.
- Sodium Nitrate dosing is at 400gpd and Ferric Chloride is being introduced to the discharge manhole 013 at 0.6-1.5gph at this time.

Any questions, please feel free to contact me!

Have a great weekend!!

Natalie L. La Fata / Plant Manager
Civil & Environmental Consultants, Inc.
4848 Park 370 Blvd., Suite F · Hazelwood, MO 63042
Toll Free: (866) 250-3679 ext. 3626 · Fax: (314) 656-4595
Mobile: (314) 341-3375 · http://www.cecinc.com
Senior Leadership · Integrated Services · Personal Business Relationships

This electronic communication and any attachments are intended solely for the use of the person or entity to which it is addressed, and may contain information that is confidential, privileged and exempt from disclosure under applicable law, including copyright law. If you are not the intended recipient of this message, you are prohibited from disclosing, reproducing, distributing, disseminating or otherwise using this transmission. Please promptly notify the sender by reply electronic communication and immediately delete this message from your system.

Doug Mendoza

From: Ed Galbraith <EGalbraith@barr.com>
Sent: Tuesday, November 10, 2015 9:16 PM
To: Doug Mendoza; John Lodderhose; Brian G. Gibson; Michael Grace; Nora C. Estopare; Rob G Daly; 'Tippett Mosby, Leanne (Leanne.TippettMosby@dnr.mo.gov)'; 'Aaron Schmidt'; 'Nagel, Chris (Christopher.Nagel@dnr.mo.gov)'; 'bpower@republicservices.com'; 'Getting, James'; 'Bouchard, Derek (DBouchard@republicservices.com)'; 'Kamp, Kevin'; 'LaFata, Natalie'; 'Cooper, Ivan (icooper@cecinc.com)'; 'lwright@cecinc.com'; Kelly Caddy; Dana B. Pasi; Christopher J. Bulmahn; Ken Gambaro; Mike Townley; 'lwright@cecinc.com'; Andrea A. Nord; Becca Coyle; 'koleary@cecinc.com'; 'sgraves@cecinc.com'; 'awyatt@herstassociates.com'
Subject: Bridgeton Landfill Monthly Report 11/11/2015

CB 12-10

The monthly report including all 013 and 014 sampling and discharge through last week is now posted to the Barr ftp site.

- The BOD result for 014 sample 10/15/2015 (Pace report 60205295) is qualified as estimated because of the precision check of the RPD calculation. The reported result is 1180 mg/l and the laboratory duplicate from the same source sample is 842 mg/l, which gives an RPD of 34% (Lab Limit 17%). The RPD indicates an imprecise result however, the higher result is reported.

The FTP site can be accessed as follows:

Copy this link and paste it into Windows Explorer (NOT Internet Explorer) ftp://ftp.barr.com/bridgetonlandfill/2015%20Reports/
User: blfdata
Password: tran$fer!

Ed Galbraith

Senior Environmental Consultant
Jefferson City office: 573.638.5024
cell: 573.418.5562
egalbraith@barr.com
www.barr.com

resourceful. naturally. BARR

Table 1
LPTP Discharge Samples
Bridgeton Landfill

						Parameter	Biochemical Oxygen Demand (5-day)	Chemical Oxygen Demand	Cyanide	Nitrate	Nitrite	Nitrogen, ammonia as N
						Total or Dissolved	NA	NA	NA	NA	NA	NA
						Permit Limitation/Surcharge Threshold	300 mg/l	600 mg/l				
Location	Date	Start Composite	End Composite	Lab Name	Data Status	Lab Report	mg/l	mg/l	mg/l	mg/l	mg/l	mg/l
MH013	10/14/2015	11:00 AM	11:00 AM	Pace	Validated	60205130	--	--	--	--	--	--
MH013	10/14/2015	11:00 AM	11:00 AM	Pace	Validated	60205130	--	--	--	--	--	--
MH013	10/14/2015	11:00 AM	7:00 PM	Pace	Validated	60205170	308	2340	0.040	--	--	250

MSD 033245

Table 1
LPTP Discharge Samples
Bridgeton Landfill

MSD 033246

						Parameter	Oil and Grease	Orthophosphate, as P	Permeate Produced	pH	pH	Phosphorus, total, as P
						Total or Dissolved	NA	NA	NA	NA	NA	NA
						Permit Limitation/Surcharge Threshold	200 mg/l			5.5 - 11.5 pH units	5.5 - 11.5 pH units	
Location	Date	Start Composite	End Composite	Lab Name	Data Status	Lab Report	mg/l	mg/l	gal	pH units	pH units	mg/l
MH013	10/14/2015	11:00 AM	11:00 AM	Pace	Validated	60205130	--	--	--	--	--	--
MH013	10/14/2015	11:00 AM	11:00 AM	Pace	Validated	60205130	--	--	--	--	--	--
MH013	10/14/2015	11:00 AM	7:00 PM	Pace	Validated	60205170	~~ND~~ <5	--	--	7.9	--	--

Table 1
LPTP Discharge Samples
Bridgeton Landfill

						Parameter	Solids, total suspended	Metered Discharge	FIT-420 Flow	Conversion Factor	Calculated Discharge	Total Phenolics by Method 420.1
						Total or Dissolved	NA	NA	NA	NA	NA	NA
						Permit Limitation/Surcharge Threshold	300 mg/l					21 mg/l
Location	Date	Start Composite	End Composite	Lab Name	Data Status	Lab Report	mg/l	gal	gal		gal	mg/l
MH013	10/14/2015	11:00 AM	11:00 AM	Pace	Validated	60205130	--	--	--	--	--	--
MH013	10/14/2015	11:00 AM	11:00 AM	Pace	Validated	60205130	--	--	--	--	--	--
MH013	10/14/2015	11:00 AM	7:00 PM	Pace	Validated	60205170	23.0	--	--	--	--	0.93

MSD 033247

Table 1
LPTP Discharge Samples
Bridgeton Landfill

						Parameter	Total Phenolics by Method 625	Total Toxic Organics	Ultraviolet absorbance at 254 nm	Antimony	Arsenic	Beryllium
						Total or Dissolved	NA	NA	NA	Total	Total	Total
						Permit Limitation/Surcharge Threshold	21 mg/l	5844 ug/l			770 ug/l	
Location	Date	Start Composite	End Composite	Lab Name	Data Status	Lab Report	mg/l	ug/l	cm-1	ug/l	ug/l	ug/l
MH013	10/14/2015	11:00 AM	11:00 AM	Pace	Validated	60205130	--	--	19.7	--	--	--
MH013	10/14/2015	11:00 AM	11:00 AM	Pace	Validated	60205130	--	--	19.7	--	--	--
MH013	10/14/2015	11:00 AM	7:00 PM	Pace	Validated	60205170	1.361	471	--	~~ND~~ <10	359	~~ND~~ <1

* enter Method 420.1 plus 11 individual phenolics. CB

MSD 033248

Table 1
LPTP Discharge Samples
Bridgeton Landfill

						Parameter	Cadmium	Chromium	Copper	Iron	Lead	Magnesium
						Total or Dissolved	Total	Total	Total	Total	Total	Total
						Permit Limitation/Surcharge Threshold	700 ug/l	5000 ug/l	2700 ug/l	150000 ug/l	400 ug/l	
Location	Date	Start Composite	End Composite	Lab Name	Data Status	Lab Report	ug/l	ug/l	ug/l	ug/l	ug/l	ug/l
MH013	10/14/2015	11:00 AM	11:00 AM	Pace	Validated	60205130	--	--	--	--	--	--
MH013	10/14/2015	11:00 AM	11:00 AM	Pace	Validated	60205130	--	--	--	--	--	--
MH013	10/14/2015	11:00 AM	7:00 PM	Pace	Validated	60205170	~~ND~~ <5	26.1	~~ND~~ <10	2500	~~ND~~ <5	130000

MSD 033249

Table 1
LPTP Discharge Samples
Bridgeton Landfill

MSD 033250

						Parameter	Mercury	Nickel	Selenium	Silver	Thallium	Zinc
						Total or Dissolved	Total	Total	Total	Total	Total	Total
						Permit Limitation/Surcharge Threshold	10 ug/l	2300 ug/l		500 ug/l		3000 ug/l
Location	Date	Start Composite	End Composite	Lab Name	Data Status	Lab Report	ug/l	ug/l	ug/l	ug/l	ug/l	ug/l
MH013	10/14/2015	11:00 AM	11:00 AM	Pace	Validated	60205130	--	--	--	--	--	--
MH013	10/14/2015	11:00 AM	11:00 AM	Pace	Validated	60205130	--	--	--	--	--	--
MH013	10/14/2015	11:00 AM	7:00 PM	Pace	Validated	60205170	~~ND~~ <0.2	23.4	~~ND~~ <15	~~ND~~ <7	~~ND~~ <20	~~ND~~ <50

Table 1
LPTP Discharge Samples
Bridgeton Landfill

						Parameter	1,2,4-Trichlorobenzene	2,4,6-Trichlorophenol	2,4-Dichlorophenol	2,4-Dimethylphenol	2,4-Dinitrophenol	2,4-Dinitrotoluene
						Total or Dissolved	NA	NA	NA	NA	NA	NA
						Permit Limitation/Surcharge Threshold						
Location	Date	Start Composite	End Composite	Lab Name	Data Status	Lab Report	ug/l	ug/l	ug/l	ug/l	ug/l	ug/l
MH013	10/14/2015	11:00 AM	11:00 AM	Pace	Validated	60205130	--	--	--	--	--	--
MH013	10/14/2015	11:00 AM	11:00 AM	Pace	Validated	60205130	--	--	--	--	--	--
MH013	10/14/2015	11:00 AM	7:00 PM	Pace	Validated	60205170	~~ND~~ <5.1	~~ND~~ <5.1	~~ND~~ <5.1	~~ND~~ <5.1	~~ND~~ <5.20	ND

MSD 033251

Table 1
LPTP Discharge Samples
Bridgeton Landfill

						Parameter	2,6-Dinitrotoluene	2-Chloronaphthalene	2-Chlorophenol	2-Methyl-4,6-dinitrophenol	2-Nitrophenol	3,3'-Dichlorobenzidine
						Total or Dissolved	NA	NA	NA	NA	NA	NA
						Permit Limitation/Surcharge Threshold						
Location	Date	Start Composite	End Composite	Lab Name	Data Status	Lab Report	ug/l	ug/l	ug/l	ug/l	ug/l	ug/l
MH013	10/14/2015	11:00 AM	11:00 AM	Pace	Validated	60205130	--	--	--	--	--	--
MH013	10/14/2015	11:00 AM	11:00 AM	Pace	Validated	60205130	--	--	--	--	--	--
MH013	10/14/2015	11:00 AM	7:00 PM	Pace	Validated	60205170	ND	ND	~~ND~~ <57	~~ND~~ <255	~~ND~~ <57	ND

MSD 033252

Table 1
LPTP Discharge Samples
Bridgeton Landfill

						Parameter	4-Bromophenyl phenyl ether	4-Chloro-3-methylphenol	4-Chlorophenyl phenyl ether	4-Nitrophenol	Acenaphthene	Acenaphthylene
						Total or Dissolved	NA	NA	NA	NA	NA	NA
						Permit Limitation/Surcharge Threshold						
Location	Date	Start Composite	End Composite	Lab Name	Data Status	Lab Report	ug/l	ug/l	ug/l	ug/l	ug/l	ug/l
MH013	10/14/2015	11:00 AM	11:00 AM	Pace	Validated	60205130	--	--	--	--	--	--
MH013	10/14/2015	11:00 AM	11:00 AM	Pace	Validated	60205130	--	--	--	--	--	--
MH013	10/14/2015	11:00 AM	7:00 PM	Pace	Validated	60205170	ND	~~ND~~ <5	ND	~~ND~~ <5	ND	ND

MSD 033253

Table 1
LPTP Discharge Samples
Bridgeton Landfill

						Parameter	Anthracene	Benz(a)anthracene	Benzidine	Benzo(a)pyrene	Benzo(b)fluoranthene	Benzo(g,h,i)perylene
						Total or Dissolved	NA	NA	NA	NA	NA	NA
						Permit Limitation/Surcharge Threshold						
Location	Date	Start Composite	End Composite	Lab Name	Data Status	Lab Report	ug/l	ug/l	ug/l	ug/l	ug/l	ug/l
MH013	10/14/2015	11:00 AM	11:00 AM	Pace	Validated	60205130	--	--	--	--	--	--
MH013	10/14/2015	11:00 AM	11:00 AM	Pace	Validated	60205130	--	--	--	--	--	--
MH013	10/14/2015	11:00 AM	7:00 PM	Pace	Validated	60205170	ND	ND	ND	ND	ND	ND

MSD 033254

Table 1
LPTP Discharge Samples
Bridgeton Landfill

						Parameter	Benzo(k)fluoranthene	Bis(2-chloroethoxy) methane	Bis(2-chloroethyl)ether	Bis(2-chloroisopropyl)ether	Bis(2-ethylhexyl)phthalate	Butyl benzyl phthalate
						Total or Dissolved	NA	NA	NA	NA	NA	NA
						Permit Limitation/Surcharge Threshold						
Location	Date	Start Composite	End Composite	Lab Name	Data Status	Lab Report	ug/l	ug/l	ug/l	ug/l	ug/l	ug/l
MH013	10/14/2015	11:00 AM	11:00 AM	Pace	Validated	60205130	--	--	--	--	--	--
MH013	10/14/2015	11:00 AM	11:00 AM	Pace	Validated	60205130	--	--	--	--	--	--
MH013	10/14/2015	11:00 AM	7:00 PM	Pace	Validated	60205170	ND	ND	ND	ND	ND	ND

MSD 033255

Table 1
LPTP Discharge Samples
Bridgeton Landfill

						Parameter	Chrysene	Dibenz(a,h)anthracene	Diethyl phthalate	Dimethyl phthalate	Di-n-butyl phthalate	Di-n-octyl phthalate
						Total or Dissolved	NA	NA	NA	NA	NA	NA
						Permit Limitation/Surcharge Threshold						
Location	Date	Start Composite	End Composite	Lab Name	Data Status	Lab Report	ug/l	ug/l	ug/l	ug/l	ug/l	ug/l
MH013	10/14/2015	11:00 AM	11:00 AM	Pace	Validated	60205130	--	--	--	--	--	--
MH013	10/14/2015	11:00 AM	11:00 AM	Pace	Validated	60205130	--	--	--	--	--	--
MH013	10/14/2015	11:00 AM	7:00 PM	Pace	Validated	60205170	ND	ND	ND	ND	ND	ND

MSD 033256

Table 1
LPTP Discharge Samples
Bridgeton Landfill

						Parameter	Fluoranthene	Fluorene	Hexachlorobenzene	Hexachlorobutadiene	Hexachlorocyclopentadiene	Hexachloroethane
						Total or Dissolved	NA	NA	NA	NA	NA	NA
						Permit Limitation/Surcharge Threshold						
Location	Date	Start Composite	End Composite	Lab Name	Data Status	Lab Report	ug/l	ug/l	ug/l	ug/l	ug/l	ug/l
MH013	10/14/2015	11:00 AM	11:00 AM	Pace	Validated	60205130	--	--	--	--	--	--
MH013	10/14/2015	11:00 AM	11:00 AM	Pace	Validated	60205130	--	--	--	--	--	--
MH013	10/14/2015	11:00 AM	7:00 PM	Pace	Validated	60205170	ND	ND	ND	~~ND~~ <5	ND	ND

MSD 033257

Table 1
LPTP Discharge Samples
Bridgeton Landfill

						Parameter	Indeno(1,2,3-cd)pyrene	Isophorone	Naphthalene	Nitrobenzene	N-Nitrosodimethylamine	N-Nitrosodi-n-propylamine
						Total or Dissolved	NA	NA	NA	NA	NA	NA
						Permit Limitation/Surcharge Threshold						
Location	Date	Start Composite	End Composite	Lab Name	Data Status	Lab Report	ug/l	ug/l	ug/l	ug/l	ug/l	ug/l
MH013	10/14/2015	11:00 AM	11:00 AM	Pace	Validated	60205130	--	--	--	--	--	--
MH013	10/14/2015	11:00 AM	11:00 AM	Pace	Validated	60205130	--	--	--	--	--	--
MH013	10/14/2015	11:00 AM	7:00 PM	Pace	Validated	60205170	ND	ND	~~ND~~ <5	ND	ND	ND

MSD 033258

Table 1
LPTP Discharge Samples
Bridgeton Landfill

						Parameter	N-Nitrosodiphenylamine	Pentachlorophenol	Phenanthrene	Phenol	Pyrene	1,1,1-Trichloroethane
						Total or Dissolved	NA	NA	NA	NA	NA	NA
						Permit Limitation/Surcharge Threshold						
Location	Date	Start Composite	End Composite	Lab Name	Data Status	Lab Report	ug/l	ug/l	ug/l	ug/l	ug/l	ug/l
MH013	10/14/2015	11:00 AM	11:00 AM	Pace	Validated	60205130	--	--	--	--	--	--
MH013	10/14/2015	11:00 AM	11:00 AM	Pace	Validated	60205130	--	--	--	--	--	--
MH013	10/14/2015	11:00 AM	7:00 PM	Pace	Validated	60205170	ND	~~ND~~ 451	ND	188	ND	ND

MSD 033259

Table 1
LPTP Discharge Samples
Bridgeton Landfill

						Parameter	1,1,2,2-Tetrachloroethane	1,1,2-Trichloroethane	1,1-Dichloroethane	1,1-Dichloroethylene	1,2-Dichlorobenzene	1,2-Dichloroethane
						Total or Dissolved	NA	NA	NA	NA	NA	NA
						Permit Limitation/Surcharge Threshold						
Location	Date	Start Composite	End Composite	Lab Name	Data Status	Lab Report	ug/l	ug/l	ug/l	ug/l	ug/l	ug/l
MH013	10/14/2015	11:00 AM	11:00 AM	Pace	Validated	60205130	--	--	--	--	--	--
MH013	10/14/2015	11:00 AM	11:00 AM	Pace	Validated	60205130	--	--	--	--	--	--
MH013	10/14/2015	11:00 AM	7:00 PM	Pace	Validated	60205170	~~ND~~ <1	ND	ND	ND	~~ND~~ <1	ND

MSD 033260

Table 1
LPTP Discharge Samples
Bridgeton Landfill

						Parameter	1,2-Dichloroethylene, cis	1,2-Dichloroethylene, trans	1,2-Dichloropropane	1,3-Dichloro-1-propene, cis	1,3-Dichloro-1-propene, trans	1,3-Dichlorobenzene
						Total or Dissolved	NA	NA	NA	NA	NA	NA
						Permit Limitation/Surcharge Threshold						
Location	Date	Start Composite	End Composite	Lab Name	Data Status	Lab Report	ug/l	ug/l	ug/l	ug/l	ug/l	ug/l
MH013	10/14/2015	11:00 AM	11:00 AM	Pace	Validated	60205130	--	--	--	--	--	--
MH013	10/14/2015	11:00 AM	11:00 AM	Pace	Validated	60205130	--	--	--	--	--	--
MH013	10/14/2015	11:00 AM	7:00 PM	Pace	Validated	60205170	ND	ND	ND	ND	ND	ND

MSD 033261

Table 1
LPTP Discharge Samples
Bridgeton Landfill

						Parameter	1,4-Dichlorobenzene	2-Chloroethyl vinyl ether	Benzene	Bromodichloromethane	Bromoform	Bromomethane
						Total or Dissolved	NA	NA	NA	NA	NA	NA
						Permit Limitation/Surcharge Threshold			140 ug/l			
Location	Date	Start Composite	End Composite	Lab Name	Data Status	Lab Report	ug/l	ug/l	ug/l	ug/l	ug/l	ug/l
MH013	10/14/2015	11:00 AM	11:00 AM	Pace	Validated	60205130	--	--	--	--	--	--
MH013	10/14/2015	11:00 AM	11:00 AM	Pace	Validated	60205130	--	--	--	--	--	--
MH013	10/14/2015	11:00 AM	7:00 PM	Pace	Validated	60205170	~~ND~~ <1	ND	~~ND~~ <1	ND	ND	~~ND~~ <5

MSD 033262

Table 1
LPTP Discharge Samples
Bridgeton Landfill

						Parameter	Carbon tetrachloride	Chlorobenzene	Chlorodibromomethane	Chloroethane	Chloroform	Chloromethane
						Total or Dissolved	NA	NA	NA	NA	NA	NA
						Permit Limitation/Surcharge Threshold						
Location	Date	Start Composite	End Composite	Lab Name	Data Status	Lab Report	ug/l	ug/l	ug/l	ug/l	ug/l	ug/l
MH013	10/14/2015	11:00 AM	11:00 AM	Pace	Validated	60205130	--	--	--	--	--	--
MH013	10/14/2015	11:00 AM	11:00 AM	Pace	Validated	60205130	--	--	--	--	--	--
MH013	10/14/2015	11:00 AM	7:00 PM	Pace	Validated	60205170	ND	ND	ND	ND	ND	ND

MSD 033263

Table 1
LPTP Discharge Samples
Bridgeton Landfill

						Parameter	Ethyl benzene	Methylene chloride	Tetrachloroethylene	Toluene	Trichloroethylene	Trichlorofluoromethane
						Total or Dissolved	NA	NA	NA	NA	NA	NA
						Permit Limitation/Surcharge Threshold						
Location	Date	Start Composite	End Composite	Lab Name	Data Status	Lab Report	ug/l	ug/l	ug/l	ug/l	ug/l	ug/l
MH013	10/14/2015	11:00 AM	11:00 AM	Pace	Validated	60205130	--	--	--	--	--	--
MH013	10/14/2015	11:00 AM	11:00 AM	Pace	Validated	60205130	--	--	--	--	--	--
MH013	10/14/2015	11:00 AM	7:00 PM	Pace	Validated	60205170	~~ND~~ <1	~~ND~~ <1	ND	~~ND~~ <1	ND	ND

MSD 033264

Table 1
LPTP Discharge Samples
Bridgeton Landfill

						Parameter	Vinyl chloride	Xylene, total
						Total or Dissolved	NA	NA
						Permit Limitation/Surcharge Threshold		
Location	Date	Start Composite	End Composite	Lab Name	Data Status	Lab Report	ug/l	ug/l
MH013	10/14/2015	11:00 AM	11:00 AM	Pace	Validated	60205130	--	--
MH013	10/14/2015	11:00 AM	11:00 AM	Pace	Validated	60205130	--	--
MH013	10/14/2015	11:00 AM	7:00 PM	Pace	Validated	60205170	ND	ND

MSD 033265

Table 1

					Parameter	Biochemical Oxygen Demand (5-day)	Chemical Oxygen Demand	Cyanide	Nitrogen, ammonia as N	Oil and Grease	pH
					Total or Dissolved	NA	NA	NA	NA	NA	NA
Location	Date	Sample Collection Time	Lab Name	Data Status	Lab Report	mg/l	mg/l	mg/l	mg/l	mg/l	pH units
LPTP-014	10/15/2015	3:30 PM	Pace	Validated	60205295	1180 *	10200	~~ND~~ <0.025	250	18.3	8.0
LPTP-014	8/21/2015	2:00 PM	Pace	Validated	60201173	--	--	0.0071	--	~~ND~~ <5	--
LPTP-014	8/20/2015	2:00 PM	Pace	Validated	60201173	445	2490	--	203	--	8.6 h
X LPTP-014	7/28/2015	11:00 AM	Pace	Validated	60199473	384 *	4520	0.015	346	10.4	8.9
ALREADY ENTERED											
LPTP-014	6/29/2015	1:30 PM	Pace	Validated	60197431	548	3860	~~ND~~ <0.05	511	~~ND~~ <5	8.8

-Bridgeton Landfill monthly Full pollutant list sample results.

Table 1

					Parameter	Phenolics	Solids, total suspended	Temperature, °C	Total Toxic Organics	Ultraviolet absorbance at 254 nm	Antimony	Arsenic
					Total or Dissolved	NA	NA	NA	NA	NA	Total	Total
Location	Date	Sample Collection Time	Lab Name	Data Status	Lab Report	mg/l	mg/l	deg C	ug/l	cm-1	mg/l	mg/l
LPTP-014	10/15/2015	3:30 PM	Pace	Validated	60205295	1.6	28100	--	1212	--	~~ND~~ <50	0.395
LPTP-014	8/21/2015	2:00 PM	Pace	Validated	60201173	~~ND~~ <0.05	--	--	930	--	--	--
LPTP-014	8/20/2015	2:00 PM	Pace	Validated	60201173	--	2730	--	--	--	~~ND~~ <10	0.331
LPTP-014	7/28/2015	11:00 AM	Pace	Validated	60199473	0.49	11100	--	330	--	ND	0.381
LPTP-014	6/29/2015	1:30 PM	Pace	Validated	60197431	~~ND~~ <0.25	35300	--	330	--	0.0685	0.371

MSD 033267

Table 1

					Parameter	Beryllium	Cadmium	Chromium	Copper	Iron	Lead	Magnesium
					Total or Dissolved	Total	Total	Total	Total	Total	Total	Total
Location	Date	Sample Collection Time	Lab Name	Data Status	Lab Report	mg/l	mg/l	mg/l	mg/l	mg/l	mg/l	mg/l
LPTP-014	10/15/2015	3:30 PM	Pace	Validated	60205295	~~ND~~ <2	0.0101	0.202	~~ND~~ <20	571	0.104	214
LPTP-014	8/21/2015	2:00 PM	Pace	Validated	60201173	--	--	--	--	--	--	--
LPTP-014	8/20/2015	2:00 PM	Pace	Validated	60201173	~~ND~~ <1	~~ND~~ <5	0.0504	~~ND~~ <10	64.2	0.0102	104
LPTP-014	7/28/2015	11:00 AM	Pace	Validated	60199473	ND	ND	0.141	ND	293	0.0377	170
LPTP-014	6/29/2015	1:30 PM	Pace	Validated	60197431	~~ND~~ <1	~~ND~~ <5	0.121	0.0202	309	0.0570	151

MSD 033268

Table 1

					Parameter	Mercury	Nickel	Selenium	Silver	Thallium	Zinc	1,2,4-Trichlorobenzene
					Total or Dissolved	Total	Total	Total	Total	Total	Total	NA
Location	Date	Sample Collection Time	Lab Name	Data Status	Lab Report	mg/l	mg/l	mg/l	mg/l	mg/l	mg/l	ug/l
LPTP-014	10/15/2015	3:30 PM	Pace	Validated	60205295	0.0152	0.0767	~~ND~~ <75	~~ND~~ <14	~~ND~~ <100	6.02	~~ND~~ <250
LPTP-014	8/21/2015	2:00 PM	Pace	Validated	60201173	--	--	--	--	--	--	~~ND~~ <200
LPTP-014	8/20/2015	2:00 PM	Pace	Validated	60201173	0.00065	0.0325	~~ND~~ <15	~~ND~~ <7	~~ND~~ <20	0.825	--
LPTP-014	7/28/2015	11:00 AM	Pace	Validated	60199473	0.0027	0.0534	0.0176	ND	ND	3.25	ND
LPTP-014	6/29/2015	1:30 PM	Pace	Validated	60197431	0.0029	0.0627	~~ND~~ <30	~~ND~~ <7	~~ND~~ <20	3.49	~~ND~~ <50

MSD 033269

Table 1

					Parameter	2,4,6-Trichlorophenol	2,4-Dichlorophenol	2,4-Dimethylphenol	2,4-Dinitrophenol	2,4-Dinitrotoluene	2,6-Dinitrotoluene	2-Chloronaphthalene
					Total or Dissolved	NA	NA	NA	NA	NA	NA	NA
Location	Date	Sample Collection Time	Lab Name	Data Status	Lab Report	ug/l	ug/l	ug/l	ug/l	ug/l	ug/l	ug/l
LPTP-014	10/15/2015	3:30 PM	Pace	Validated	60205295	ND	ND	ND	ND	ND	ND	ND
LPTP-014	8/21/2015	2:00 PM	Pace	Validated	60201173	ND	ND	ND	ND	ND	ND	ND
LPTP-014	8/20/2015	2:00 PM	Pace	Validated	60201173	--	--	--	--	--	--	--
LPTP-014	7/28/2015	11:00 AM	Pace	Validated	60199473	ND	ND	ND	ND	ND	ND	ND
LPTP-014	6/29/2015	1:30 PM	Pace	Validated	60197431	ND	ND	ND	ND	ND	ND	ND

Table 1

					Parameter	2-Chlorophenol	2-Methyl-4,6-dinitrophenol	2-Nitrophenol	3,3'-Dichlorobenzidine	4-Bromophenyl phenyl ether	4-Chloro-3-methylphenol	4-Chlorophenyl phenyl ether
					Total or Dissolved	NA	NA	NA	NA	NA	NA	NA
Location	Date	Sample Collection Time	Lab Name	Data Status	Lab Report	ug/l	ug/l	ug/l	ug/l	ug/l	ug/l	ug/l
LPTP-014	10/15/2015	3:30 PM	Pace	Validated	60205295	ND	ND	ND	ND	ND	ND	ND
LPTP-014	8/21/2015	2:00 PM	Pace	Validated	60201173	ND	ND	ND	ND	ND	ND	ND
LPTP-014	8/20/2015	2:00 PM	Pace	Validated	60201173	--	--	--	--	--	--	--
LPTP-014	7/28/2015	11:00 AM	Pace	Validated	60199473	ND	ND	ND	ND	ND	ND	ND
LPTP-014	6/29/2015	1:30 PM	Pace	Validated	60197431	ND	ND	ND	ND	ND	ND	ND

MSD 033271

Table 1

					Parameter	4-Nitrophenol	Acenaphthene	Acenaphthylene	Anthracene	Benz(a)anthracene	Benzidine	Benzo(a)pyrene
					Total or Dissolved	NA	NA	NA	NA	NA	NA	NA
Location	Date	Sample Collection Time	Lab Name	Data Status	Lab Report	ug/l	ug/l	ug/l	ug/l	ug/l	ug/l	ug/l
LPTP-014	10/15/2015	3:30 PM	Pace	Validated	60205295	ND	ND	ND	ND	ND	ND	ND
LPTP-014	8/21/2015	2:00 PM	Pace	Validated	60201173	ND	ND	ND	ND	ND	ND	ND
LPTP-014	8/20/2015	2:00 PM	Pace	Validated	60201173	--	--	--	--	--	--	--
LPTP-014	7/28/2015	11:00 AM	Pace	Validated	60199473	ND	ND	ND	ND	ND	ND	ND
LPTP-014	6/29/2015	1:30 PM	Pace	Validated	60197431	ND	ND	ND	ND	ND	ND	ND

Table 1

					Parameter	Benzo(b)fluoranthene	Benzo(g,h,i)perylene	Benzo(k)fluoranthene	Bis(2-chloroethoxy)methane	Bis(2-chloroethyl)ether	Bis(2-chloroisopropyl)ether	Bis(2-ethylhexyl)phthalate
					Total or Dissolved	NA	NA	NA	NA	NA	NA	NA
Location	Date	Sample Collection Time	Lab Name	Data Status	Lab Report	ug/l	ug/l	ug/l	ug/l	ug/l	ug/l	ug/l
LPTP-014	10/15/2015	3:30 PM	Pace	Validated	60205295	ND	ND	ND	ND	ND	ND	ND
LPTP-014	8/21/2015	2:00 PM	Pace	Validated	60201173	ND	ND	ND	ND	ND	ND	ND
LPTP-014	8/20/2015	2:00 PM	Pace	Validated	60201173	--	--	--	--	--	--	--
LPTP-014	7/28/2015	11:00 AM	Pace	Validated	60199473	ND	ND	ND	ND	ND	ND	ND
LPTP-014	6/29/2015	1:30 PM	Pace	Validated	60197431	ND	ND	ND	ND	ND	ND	ND

MSD 033273

Table 1

					Parameter	Butyl benzyl phthalate	Chrysene	Dibenz(a,h)anthracene	Diethyl phthalate	Dimethyl phthalate	Di-n-butyl phthalate	Di-n-octyl phthalate
					Total or Dissolved	NA	NA	NA	NA	NA	NA	NA
Location	Date	Sample Collection Time	Lab Name	Data Status	Lab Report	ug/l	ug/l	ug/l	ug/l	ug/l	ug/l	ug/l
LPTP-014	10/15/2015	3:30 PM	Pace	Validated	60205295	ND	ND	ND	ND	ND	ND	ND
LPTP-014	8/21/2015	2:00 PM	Pace	Validated	60201173	ND	ND	ND	ND	ND	ND	ND
LPTP-014	8/20/2015	2:00 PM	Pace	Validated	60201173	--	--	--	--	--	--	--
LPTP-014	7/28/2015	11:00 AM	Pace	Validated	60199473	ND	ND	ND	ND	ND	ND	ND
LPTP-014	6/29/2015	1:30 PM	Pace	Validated	60197431	ND	ND	ND	ND	ND	ND	ND

Table 1

MSD 033275

					Parameter	Fluoranthene	Fluorene	Hexachlorobenzene	Hexachlorobutadiene	Hexachlorocyclopentadiene	Hexachloroethane	Indeno(1,2,3-cd)pyrene
					Total or Dissolved	NA	NA	NA	NA	NA	NA	NA
Location	Date	Sample Collection Time	Lab Name	Data Status	Lab Report	ug/l	ug/l	ug/l	ug/l	ug/l	ug/l	ug/l
LPTP-014	10/15/2015	3:30 PM	Pace	Validated	60205295	ND	ND	ND	~~ND~~ <250	ND	ND	ND
LPTP-014	8/21/2015	2:00 PM	Pace	Validated	60201173	ND	ND	ND	~~ND~~ <200	ND	ND	ND
LPTP-014	8/20/2015	2:00 PM	Pace	Validated	60201173	--	--	--	--	--	--	--
LPTP-014	7/28/2015	11:00 AM	Pace	Validated	60199473	ND	ND	ND	ND	ND	ND	ND
LPTP-014	6/29/2015	1:30 PM	Pace	Validated	60197431	ND	ND	ND	~~ND~~ <50	ND	ND	ND

Table 1

					Parameter	Isophorone	Naphthalene	Nitrobenzene	N-Nitrosodimethylamine	N-Nitrosodi-n-propylamine	N-Nitrosodiphenylamine	Pentachlorophenol
					Total or Dissolved	NA	NA	NA	NA	NA	NA	NA
Location	Date	Sample Collection Time	Lab Name	Data Status	Lab Report	ug/l	ug/l	ug/l	ug/l	ug/l	ug/l	ug/l
LPTP-014	10/15/2015	3:30 PM	Pace	Validated	60205295	ND	~~ND~~ <250	ND	ND	ND	ND	ND
LPTP-014	8/21/2015	2:00 PM	Pace	Validated	60201173	ND	~~ND~~ <200	ND	ND	ND	ND	ND
LPTP-014	8/20/2015	2:00 PM	Pace	Validated	60201173	--	--	--	--	--	--	--
LPTP-014	7/28/2015	11:00 AM	Pace	Validated	60199473	ND	ND	ND	ND	ND	ND	ND
LPTP-014	6/29/2015	1:30 PM	Pace	Validated	60197431	ND	~~ND~~ <50	ND	ND	ND	ND	ND

MSD 033276

Table 1

					Parameter	Phenanthrene	Phenol	Pyrene	1,1,1-Trichloroethane	1,1,2,2-Tetrachloroethane	1,1,2-Trichloroethane	1,1-Dichloroethane
					Total or Dissolved	NA	NA	NA	NA	NA	NA	NA
Location	Date	Sample Collection Time	Lab Name	Data Status	Lab Report	ug/l	ug/l	ug/l	ug/l	ug/l	ug/l	ug/l
LPTP-014	10/15/2015	3:30 PM	Pace	Validated	60205295	ND	326	ND	ND	~~ND~~ <1	ND	ND
LPTP-014	8/21/2015	2:00 PM	Pace	Validated	60201173	ND	~~ND~~ <200	ND	ND	~~ND~~ <10	ND	ND
LPTP-014	8/20/2015	2:00 PM	Pace	Validated	60201173	--	--	--	--	--	--	--
LPTP-014	7/28/2015	11:00 AM	Pace	Validated	60199473	ND	ND	ND	ND	ND	ND	ND
LPTP-014	6/29/2015	1:30 PM	Pace	Validated	60197431	ND	~~ND~~ <50	ND	ND	~~ND~~ <1	ND	ND

MSD 033277

Table 1

					Parameter	1,1-Dichloroethylene	1,2-Dichlorobenzene	1,2-Dichloroethane	1,2-Dichloroethylene, cis	1,2-Dichloroethylene, trans	1,2-Dichloropropane	1,3-Dichloro-1-propene, cis
					Total or Dissolved	NA	NA	NA	NA	NA	NA	NA
Location	Date	Sample Collection Time	Lab Name	Data Status	Lab Report	ug/l	ug/l	ug/l	ug/l	ug/l	ug/l	ug/l
LPTP-014	10/15/2015	3:30 PM	Pace	Validated	60205295	ND	~~ND~~ <1	ND	ND	ND	ND	ND
LPTP-014	8/21/2015	2:00 PM	Pace	Validated	60201173	ND	~~ND~~ <10	ND	ND	ND	ND	ND
LPTP-014	8/20/2015	2:00 PM	Pace	Validated	60201173	--	--	--	--	--	--	--
LPTP-014	7/28/2015	11:00 AM	Pace	Validated	60199473	ND	ND	ND	ND	ND	ND	ND
LPTP-014	6/29/2015	1:30 PM	Pace	Validated	60197431	ND	~~ND~~ <1	ND	ND	ND	ND	ND

MSD 033278

Table 1

					Parameter	1,3-Dichloro-1-propene, trans	1,3-Dichlorobenzene	1,4-Dichlorobenzene	2-Chloroethyl vinyl ether	Acrolein	Acrylonitrile	Benzene
					Total or Dissolved	NA	NA	NA	NA	NA	NA	NA
Location	Date	Sample Collection Time	Lab Name	Data Status	Lab Report	ug/l	ug/l	ug/l	ug/l	ug/l	ug/l	ug/l
LPTP-014	10/15/2015	3:30 PM	Pace	Validated	60205295	ND	ND	~~ND~~ <1	ND	--	--	~~ND~~ <1
LPTP-014	8/21/2015	2:00 PM	Pace	Validated	60201173	ND	ND	~~ND~~ <10	ND	--	--	~~ND~~ <10
LPTP-014	8/20/2015	2:00 PM	Pace	Validated	60201173	--	--	--	--	--	--	--
LPTP-014	7/28/2015	11:00 AM	Pace	Validated	60199473	ND	ND	ND	ND	--	--	ND
LPTP-014	6/29/2015	1:30 PM	Pace	Validated	60197431	ND	ND	~~ND~~ <1	ND	--	--	~~ND~~ <1

Table 1

					Parameter	Bromodichloromethane	Bromoform	Bromomethane	Carbon tetrachloride	Chlorobenzene	Chlorodibromomethane	Chloroethane
					Total or Dissolved	NA	NA	NA	NA	NA	NA	NA
Location	Date	Sample Collection Time	Lab Name	Data Status	Lab Report	ug/l	ug/l	ug/l	ug/l	ug/l	ug/l	ug/l
LPTP-014	10/15/2015	3:30 PM	Pace	Validated	60205295	ND	ND	~~ND~~ <5	ND *	~~ND~~ <1	ND	ND
LPTP-014	8/21/2015	2:00 PM	Pace	Validated	60201173	ND	ND	~~ND~~ <50	ND	~~ND~~ <10	ND	ND
LPTP-014	8/20/2015	2:00 PM	Pace	Validated	60201173	--	--	--	--	--	--	--
LPTP-014	7/28/2015	11:00 AM	Pace	Validated	60199473	ND	ND	ND	ND	ND	ND	ND
LPTP-014	6/29/2015	1:30 PM	Pace	Validated	60197431	ND	ND	~~ND~~ <5	ND	~~ND~~ <1	ND	ND

MSD 033280

Table 1

MSD 033281

					Parameter	Chloroform	Chloromethane	Ethyl benzene	Methyl ethyl ketone	Methylene chloride	Tetrachloroethylene	Toluene
					Total or Dissolved	NA	NA	NA	NA	NA	NA	NA
Location	Date	Sample Collection Time	Lab Name	Data Status	Lab Report	ug/l	ug/l	ug/l	ug/l	ug/l	ug/l	ug/l
LPTP-014	10/15/2015	3:30 PM	Pace	Validated	60205295	ND	ND	~~ND~~ <1	--	~~ND~~ <1	ND	16.1
LPTP-014	8/21/2015	2:00 PM	Pace	Validated	60201173	ND	ND	~~ND~~ <10	--	~~ND~~ <10	ND	~~ND~~ <10
LPTP-014	8/20/2015	2:00 PM	Pace	Validated	60201173	--	--	--	--	--	--	--
LPTP-014	7/28/2015	11:00 AM	Pace	Validated	60199473	ND	ND	ND	--	ND	ND	ND
LPTP-014	6/29/2015	1:30 PM	Pace	Validated	60197431	42.4	ND	~~ND~~ <1	--	~~ND~~ <1	ND	~~ND~~ <1

Table 1

					Parameter	Trichloroethylene	Trichlorofluoromethane	Vinyl chloride	Xylene, m & p	Xylene, o	Xylene, total
					Total or Dissolved	NA	NA	NA	NA	NA	NA
Location	Date	Sample Collection Time	Lab Name	Data Status	Lab Report	ug/l	ug/l	ug/l	ug/l	ug/l	ug/l
LPTP-014	10/15/2015	3:30 PM	Pace	Validated	60205295	ND	ND	ND	--	--	ND
LPTP-014	8/21/2015	2:00 PM	Pace	Validated	60201173	ND	ND	ND	--	--	ND
LPTP-014	8/20/2015	2:00 PM	Pace	Validated	60201173	--	--	--	--	--	--
LPTP-014	7/28/2015	11:00 AM	Pace	Validated	60199473	ND	ND	ND	--	--	ND
LPTP-014	6/29/2015	1:30 PM	Pace	Validated	60197431	ND	ND	ND	--	--	ND

Doug Mendoza Bridgeton Landfill

From: Jay Hoskins
Sent: Monday, November 02, 2015 9:36 AM
To: Doug Mendoza
Subject: FW: Bridgeton PS No.1 Overflow Event Status Update (1430 HRS 27 OCT 2015)

From: Rob G Daly
Sent: Friday, October 30, 2015 4:01 PM
To: Jonathon Sprague
Cc: Catherine Politte; Bret A. Berthold; Lance LeComb; Sean Hadley; Mark Bright; Jay Kniker; Mike Waxman; Jay Hoskins; Alverda Oppermann; Sheila Michael
Subject: Bridgeton PS No.1 Overflow Event Status Update (1430 HRS 27 OCT 2015)

All

Update on Bridgeton PS No.1 Overflow Event (occurred Tuesday, October 27, 2015):

1. Sequence of events as follows-which matches what has been put out in multiple new releases:

Operations personnel were notified at approximately 2:00-2:30 pm, Tuesday, October 27th of an overflow event that was underway. This notification was received through multiple channels, concurrently and simultaneously. The Bridgeton Landfill personnel physically and visually witnessed the overflow event occurring and immediately (verbally) notified PS Division personnel of the event. In addition, PS Division maintenance responders were concurrently notified of a high wet well level alarm at the adjacent Westlakes Pump Station- which resulted in our Lemay Board immediately dispatching an Alarm Responder (PS Maint Tech) to the site. This alarm at Westlakes PS was an 'indirect' indicator of an event occurring at Bridgeton PS No.1. However- no alarm requiring a maintenance response was received from our Bridgeton PS No.1 facility.

PS Division maintenance personnel arrived on site at approximately 1500 hours and immediately realized that the problem was actually at the Bridgeton PS No. 1 site however. The station was operating, but was not pumping at full capacity. They placed the facility in manual operation mode within minutes of arrival and were able to immediately lower the wet well levels and first, reduce, and then, cease, the flow discharging into the adjacent areas.

2. Root Cause Failure Analysis and Immediate Corrective Action Plan(s).

A 'root cause failure analysis' commenced immediately and revealed – over the course of the next 72 hours- several proximate causes of the overflow event. What follows is a summarized version for the larger group. A more detailed, lengthier, and more involved version of this process is still underway, internal to the Operations group and will not be fully completed for several weeks. The proximate causes of the failure event are as follows:

a. Chemical Precipitate

   i. A preliminary investigation revealed that a chemical precipitate had formed on multiple mechanical components (interiors of plug valves, check valves, floats) that was, at places, almost ½ inch thick. This precipitate impeded the ability of these components to function properly and is the root cause of the series of pump station failures that resulted in an overflow event. This precipitate has possibly formed as the result of the (landfill initiated) chemical dosing that is undertaken (at the behest of the District) for odor control purposes-and consists of 'iron salts'. Samples have been collected and are being delivered to DEC for

assistance in performing an analysis. Lastly- this precipitate has formed in a very short time frame- as this facility was vactored out 3 weeks ago, and all mechanical items visually inspected, as part of another investigation into system performance - and this material was not present at that time. This precipitate was the root cause of the mechanical failures that resulted in the facility failing to function at capacity.

Corrective Action: Valves have been repaired and re-installed and new valves ordered for installation next week. Floats were cleaned and placed back in service and will be inspected more frequently until we can determine a more suitable solution. Additional, redundant level control sensors have been installed. Programmable Logic Controls programs have been revised to ensure that both signals are sent to the SCADA system- adding redundancy to the alarm notification process.

b. Communications. Communications failures are the immediate, root cause of the overflow event

i. Plant SCADA. The Bridgeton Landfill has a hard wired communications link with PS No. 1, which goes to their Plant SCADA system- and is a critical part of the overall system function. When the Plant SCADA receives a pump failure signal, or a high wet well level signal, seen concurrently by MSD, our SOP is for them to automatically shut off flow until we conduct a maintenance response and resolve the issue- allowing them to then resume flow. In this case- we discovered that the Plant SCADA had not received a signal from our facility for a lengthy duration. In other words- there was a communications failure between our facility control panel and their hard wired connection to that control panel that resulted in them having no visibility on failures at our facility, failures that would have normally resulted in a cessation of flow while MSD conducted a maintenance response. Since the intervening period has been dry- the Plant Operators did not perceive that this was a communications failure and assumed that the MSD facility was in normal operations status. Thus- when the various mechanical components failed- even if they had been able to signal/indicate a failure- the Plant SCADA would not have received this alarm. Since the Plant SCADA did not receive any alarm- the Landfill Plant continued to pump flow to the station- the station could not convey enough of the flow due to issues noted above – and the flow then backed up in the collection system.

Corrective Action: Communications was restored with the Plant SCADA, tested and validated with Plant personnel, and a timer was installed that will 'poll' the communications system periodically. If the communications fail, MSD and the Landfill Plant SCADA will both have an alarm indicating Communications Failure and corrective action can be taken.

ii. MSD SCADA. If the MSD SCADA system had received an alarm indicating a facility high wet well level or pump failure- our collaboratively developed SOP with the Plant would have resulted in a call by PS Division Lemay Board Operators to the Plant- requesting a cessation of flow. Our SCADA system also did not receive a failure alarm in this case - since the MSD system did not send a signal of a pump failure. See above for reasons. MSD did not have any signal from our SCADA (radio based) system indicating a failure- thus- no call was made to the Plant to request a cessation of flow and the overflow event commenced.

Corrective Action: MSD revised the logic in our Programmable Logic Controller (PLC) - in order to revise how our system communicates with our SCADA system.

3. The facility has been restored to normal operational mode as of last night, Thursday, October 29th at 1900. It is now remotely monitored by our SCADA System and Board Operators- with a special focus on conducting a prompt, prioritized maintenance response to any alarm at the facility. Additional analysis of the event will continue and additional mechanical repairs will be conducted in the next 2 weeks – to replace the mechanical components affected by the precipitate.

Any questions- please do not hesitate to contact me for additional clarification or detail.

Dr

Doug Mendoza Bridgeton Landfill

From: LaFata, Natalie <nlafata@cecinc.com>
Sent: Friday, October 30, 2015 12:58 PM
To: Rob G Daly; Mark Bright; Mike Waxman; Doug Mendoza; Jeff Jones; Kevin George
Cc: O'Leary, Kevin; Graves, Stephen; Kamp, Kevin; Kohrt, Mark; 'Power, Brian'
Subject: Plant Update 10-30-2015

The plant discharge is averaging 200+ GPM when discharging at full capacity. The average amounts since the last Force Main/Plant Update:

Date	**Direct Discharge** (gallons)
10/23/2015	271,374
10/24/2015	129,880
10/25/2015	104,739
10/26/2015	245,980
10/27/2015	210,574
10/28/2015	124,513
10/29/2015	148,335

- On 10-29-2015, the treatment plant stopped discharging for MSD Pumpstation/force main repairs and maintenance. The plant resumed discharge later that day.
- There is another 1 million gallon aeration tank in the cleaning process at the plant this week.. This will not affect the treatment plants production to the force main.
- Sodium Nitrate dosing is at 400gpd and Ferric Chloride is being introduced to the discharge manhole 013 at 0.6-1.5gph at this time.

Any questions, please feel free to contact me!

Have a great weekend!!

Natalie L. La Fata / Plant Manager
Civil & Environmental Consultants, Inc.
4848 Park 370 Blvd., Suite F · Hazelwood, MO 63042
Toll Free: (866) 250-3679 ext. 3626 · Fax: (314) 656-4595
Mobile: (314) 341-3375 · http://www.cecinc.com
Senior Leadership · Integrated Services · Personal Business Relationships

This electronic communication and any attachments are intended solely for the use of the person or entity to which it is addressed, and may contain information that is confidential, privileged and exempt from disclosure under applicable law, including copyright law. If you are not the intended recipient of this message, you are prohibited from disclosing, reproducing, distributing, disseminating or otherwise using this transmission. Please promptly notify the sender by reply electronic communication and immediately delete this message from your system.

Doug Mendoza Bridgeton Landfill

From: Ed Galbraith <EGalbraith@barr.com>
Sent: Friday, October 30, 2015 10:07 AM
To: Doug Mendoza; John Lodderhose; Brian G. Gibson; Michael Grace; Nora C. Estopare; Rob G Daly; 'Getting, James'; Christopher J. Bulmahn; Mike Townley; Becca Coyle
Cc: 'bpower@republicservices.com'; 'Bouchard, Derek (DBouchard@republicservices.com)'; Kelly Caddy; Dana B. Pasi
Subject: Lab Report Notification

In order to meet the 21-day reporting period, the following lab reports have been posted to the Barr ftp site at ftp://ftp.barr.com/bridgetonlandfill/2015%20Reports/2015_1104/Lab%20Reports/.

Lab	Report	Date Sampled	Parameters	Sample Location
PACE LABORATORIES	60205130	10/14/2015	UV 254	LPTP-MH013 UVT
PACE LABORATORIES	60205170	10/14/2015	VOCS, TOT PHEN, TOT CN, SVOCS, O&G, TOT METALS,	LPTP-00 TRIP BLANK; LPTP-P02,03,07,08,09-013; LPTP-
PACE LABORATORIES	60205295	10/15/2015	VOCS, TOT PHEN, TOT CN, SVOCS, O&G, TOT METALS,	LPTP-00 TRIP BLANK; LPTP-P02,03,07,08,09-014; LPTP-

Ed Galbraith

Senior Environmental Consultant
Jefferson City, MO office: 573.638.5024
cell: 573.418.5562
egalbraith@barr.com
www.barr.com

resourceful. naturally. BARR

Doug Mendoza Bridgeton Landfill

From: Scott D Kappelmann
Sent: Wednesday, October 28, 2015 11:43 AM
To: Ken Goins
Cc: Doug Mendoza; John Grimm
Subject: FW: MSD Force Main Dedication Meeting
Attachments: 20151023-Minutes BBFM MSD Meeting Updated 130-484.pdf

Ken,
Please see the attached Bridgeton Force Main meeting minutes from last Friday.
Yesterday's spill is a separate issue, the result of a PLC failure at Pump Station 1 at the landfill.

Thanks,

Scott Kappelmann, PE
Civil Engineer

MSD Development Review

From: Koziatek, Dan [mailto:dkoziatek@cecinc.com]
Sent: Wednesday, October 28, 2015 7:53 AM
To: Scott D Kappelmann; Rob G Daly; Jay Kniker; John Grimm; Kamp, Kevin
Cc: Brian J. Power (BPower@republicservices.com)
Subject: RE: MSD Force Main Dedication Meeting

Thanks Scott – attached are the meeting minutes with adjustments per MSD comments for your records.

Sincerely,

Dan Koziatek, P.E. / Senior Project Manager
Civil & Environmental Consultants, Inc.
4848 Park 370 Blvd., Suite F · Hazelwood, MO 63042
Toll-Free: 866-250-3679 · Direct: 314-656-4588 · Fax: 314-656-4595 ·
Mobile: 314-330-9805 · http://www.cecinc.com
Senior Leadership · Integrated Services · Personal Business Relationships

---

From: Scott D Kappelmann [mailto:skappelmann@stlmsd.com]
Sent: Wednesday, October 28, 2015 7:24 AM
To: Rob G Daly; Koziatek, Dan; Jay Kniker; John Grimm; Kamp, Kevin
Cc: Brian J. Power (BPower@republicservices.com)
Subject: RE: MSD Force Main Dedication Meeting

Gentlemen, we'll do this again.
Please see the attached and below.

Thanks Rob!

From: Rob G Daly
Sent: Wednesday, October 28, 2015 7:22 AM

To: Scott D Kappelmann; 'Koziatek, Dan'; Jay Kniker; John Grimm; Kamp, Kevin
Cc: Brian J. Power (BPower@republicservices.com)
Subject: RE: MSD Force Main Dedication Meeting

no attachment....

Rob Daly, P.E.
Division Manager- Pump Stations
Department of Operations
Metropolitan St Louis Sewer District
1025 Grand Glaize Parkway
Valley Park, MO 63088-1952
(636) 861-6706 (Office)

rdaly@stlmsd.com

From: Scott D Kappelmann
Sent: Wednesday, October 28, 2015 7:22 AM
To: 'Koziatek, Dan'; Jay Kniker; John Grimm; Kamp, Kevin
Cc: Brian J. Power (BPower@republicservices.com); Rob G Daly
Subject: RE: MSD Force Main Dedication Meeting

Dan,
Please see comments on the minutes from John Grimm and Scott Kappelmann.

Thank You,

Scott Kappelmann, PE
Civil Engineer

MSD Development Review

From: Koziatek, Dan [mailto:dkoziatek@cecinc.com]
Sent: Monday, October 26, 2015 1:38 PM
To: Jay Kniker; Scott D Kappelmann; John Grimm; Kamp, Kevin
Cc: Brian J. Power (BPower@republicservices.com); Rob G Daly
Subject: MSD Force Main Dedication Meeting

All,

Attached are the meeting minutes I jotted down from our meeting last Friday at MSD. Please review and add or adjust if necessary.

Sincerely,

Dan Koziatek, P.E. / Senior Project Manager
Civil & Environmental Consultants, Inc.
4848 Park 370 Blvd., Suite F · Hazelwood, MO 63042
Toll-Free: 866-250-3679 · Direct: 314-656-4588 · Fax: 314-656-4595 ·
Mobile: 314-330-9805 · http://www.cecinc.com
Senior Leadership · Integrated Services · Personal Business Relationships

Meeting Minutes
Bridgeton Bissell Force Main
CEC Project 130-484
October 23, 2015, 8:30am-9:30pm, MSD 2350 Market Street, St. Louis, MO 63103

Attendees:
MSD – Scott Kappelmann, Jay Kniker, John Grimm
Civil & Environmental Consultants, Inc. (CEC) – Dan Koziatek, Kevin Kamp

Items reviewed and/or discussed:

- MSD is observing a high pressure low capacity issue with the PS3 pumps. The pumps are not cycling properly and may require adjustments in the programming. The pump cycling symptoms are indicative of a possible air column in the force main downstream of PS3.
- MSD is planning to place a SmartBall into the force main in an attempt to check for air pockets and anomalies. The SmartBall will be dropped into the main using the bypass manhole directly downstream of PS3 and be collected in a basket at the end of the force main near I-170 (manhole S2). Work is scheduled for Friday 10/30.
- MSD maintenance personnel have captured some debris in the PS3 wet well including black grit and sediment that resembles scale. CEC noted that if scaling were to occur due to the treatment plant operations, it would be more noticeable on the front end (PS1) rather than the back end (PS3) of the system. In addition, there have been no pressure or pump issues at PS1 or PS2 at recent required flow rates.
- MSD has investigated the Corporate Exchange watershed and found a seed packaging plant is tributary to the force main system. It appears that in the recent past a large amount of bird or sunflower seeds was deposited in the sewer and may be affecting the flow of the system. Evidence of seeds was found in all three pump stations and may be affecting the operation of the air release valves.
- On Monday (10/26), MSD operations personnel are planning to install listening devices on the force main at each ARV manhole in advance of the SmartBall work.
- Wastewater dosing – CEC is currently dosing approximately 1 gal/hour of Ferric Chloride (Cl3Fe) into the wastewater at the sampling manhole directly upstream of PS1. This dosing is being done to proactively reduce odor in the system. CEC will consider adjusting or reducing the dosing amount after more data is gathered.
- Force Main Dedication – MSD is amenable to a proportional release of escrows assuming the following:
    - PS1 and PS2 pumps are to be run "in hand" to confirm 500 GPM flow rate. MSD will perform this check using a flow meter by end of October or early November.
    - If the system checks out, partial escrows released.
    - PS3 system: MSD estimates 3 weeks to analyze the SmartBall data and prepare a report. Any construction efforts or field work required due to deficiencies or data from the SmartBall recon is planned to be performed in December and completed by the end of the year.
    - All three pump stations must be capable of pumping 500 GPM flow with one pump on at full speed in accordance with the original design.

Doug Mendoza

From: Ed Galbraith <EGalbraith@barr.com>
Sent: Wednesday, October 28, 2015 10:55 AM
To: Doug Mendoza; John Lodderhose; Brian G. Gibson; Michael Grace; Nora C. Estopare; Rob G Daly; 'Tippett Mosby, Leanne (Leanne.TippettMosby@dnr.mo.gov)'; 'Aaron Schmidt'; 'Nagel, Chris (Christopher.Nagel@dnr.mo.gov)'; 'bpower@republicservices.com'; 'Getting, James'; 'Bouchard, Derek (DBouchard@republicservices.com)'; 'Kamp, Kevin'; 'LaFata, Natalie'; 'Cooper, Ivan (icooper@cecinc.com)'; 'lwright@cecinc.com'; Kelly Caddy; Dana B. Pasi; Christopher J. Bulmahn; Ken Gambaro; Mike Townley; 'lwright@cecinc.com'; Andrea A. Nord; Becca Coyle; 'koleary@cecinc.com'; 'sgraves@cecinc.com'; 'awyatt@herstassociates.com'
Subject: Bridgeton Landfill Weekly Report

CB 10-30

The material for last week is posted to Barr's ftp site.

- Two new PDC reports from samples taken 10/15/2015 are posted. There are no qualifiers on the data.
- No hauling has occurred since 10/15/2015

The FTP site can be accessed as follows:

Copy this link and paste it into Windows Explorer (NOT Internet Explorer) ftp://ftp.barr.com/bridgetonlandfill/2015%20Reports/
User: blfdata
Password: tran$fer!

Ed Galbraith

Senior Environmental Consultant
Jefferson City office: 573.638.5024
cell: 573.418.5562
egalbraith@barr.com
www.barr.com

resourceful. naturally. BARR

Table 1

					Parameter	Biochemical Oxygen Demand (5-day)	Chemical Oxygen Demand	Cyanide	Nitrogen, ammonia as N	Oil and Grease	pH
					Total or Dissolved	NA	NA	NA	NA	NA	NA
Location	Date	Sample Collection Time	Lab Name	Data Status	Lab Report	mg/l	mg/l	mg/l	mg/l	mg/l	pH units
T1-140-AS	10/15/2015	6:10 AM	PDC	Validated	5102448	2200	11000	--	--	--	--
T1-140-AS	10/15/2015		Field	No QC	WASTE_2015	--	4420	--	--	--	7.67
HW	10/14/2015		Field	No QC	WASTE_2015	--	3260	--	--	--	7.66
T1-139-AS	10/13/2015	6:15 AM	PDC	Validated	5101878	1700	23000	--	--	--	--
T1-139-AS	10/13/2015		Field	No QC	WASTE_2015	--	8190	--	--	--	7.92

MSD 033291

Table 1

					Parameter	Phenolics	Solids, total suspended	Temperature, °C	Total Toxic Organics	Ultraviolet absorbance at 254 nm	Antimony	Arsenic
					Total or Dissolved	NA	NA	NA	NA	NA	Total	Total
Location	Date	Sample Collection Time	Lab Name	Data Status	Lab Report	mg/l	mg/l	deg C	ug/l	cm-1	mg/l	mg/l
T1-140-AS	10/15/2015	6:10 AM	PDC	Validated	5102448	--	21000	--	--	--	--	--
T1-140-AS	10/15/2015		Field	No QC	WASTE_2015	--	20480	32.0	--	--	--	--
HW	10/14/2015		Field	No QC	WASTE_2015	--	18980	31.8	--	--	--	--
T1-139-AS	10/13/2015	6:15 AM	PDC	Validated	5101878	--	76000	--	--	--	--	--
T1-139-AS	10/13/2015		Field	No QC	WASTE_2015	--	50080	33.3	--	--	--	--

MSD 033292

Doug Mendoza

Bridgeton Landfill

From: LaFata, Natalie <nlafata@cecinc.com>
Sent: Friday, October 23, 2015 12:31 PM
To: Rob G Daly; Mark Bright; Mike Waxman; Doug Mendoza; Jeff Jones; Kevin George
Cc: O'Leary, Kevin; Graves, Stephen; Kamp, Kevin; Kohrt, Mark; LaFata, Natalie
Subject: Plant Update 10-23-2015

The plant discharge is averaging 200+ GPM. The average amounts since the last Force Main/Plant Update:

Date	**Direct Discharge** (gallons)
10/16/2015	245,257
10/17/2015	227,778
10/18/2015	200,746
10/19/2015	255,000
10/20/2015	228,207
10/21/2015	95,196
10/22/2015	268,343

- On 10-21-2015, the treatment plant stopped discharging for plant/line maintenance. Fresh water was flushed from the plant through the discharge manhole. The plant resumed discharge that day.
- The 1 million gallon was cleaned this week and is being put back into service. We are planning to clean another 1 million gallon aeration tank in the plant's process. It is planning to be drained and maintenance is going to be performed on it next week. This will not affect the treatment plants production to the force main.
- Sodium Nitrate dosing is at 400gpd and Ferric Chloride is being introduced to the discharge manhole 013 at 0.6-1.5gph at this time.

Any questions, please feel free to contact me!

Have a great weekend!!

Natalie L. La Fata / Plant Manager
Civil & Environmental Consultants, Inc.
4848 Park 370 Blvd., Suite F · Hazelwood, MO 63042
Toll Free: (866) 250-3679 ext. 3626 · Fax: (314) 656-4595
Mobile: (314) 341-3375 · http://www.cecinc.com
Senior Leadership · Integrated Services · Personal Business Relationships

This electronic communication and any attachments are intended solely for the use of the person or entity to which it is addressed, and may contain information that is confidential, privileged and exempt from disclosure under applicable law, including copyright law. If you are not the intended recipient of this message, you are prohibited from disclosing, reproducing, distributing, disseminating or otherwise using this transmission. Please promptly notify the sender by reply electronic communication and immediately delete this message from your system.

HERST & ASSOCIATES, INC.®

Global Presence
Personal Attention

CB 11-04

Mr. Chris Bulmahn
Associate Engineer
Metropolitan St. Louis Sewer District
Division of Environmental Compliance
10 East Grand Avenue
St. Louis, MO 63147-2913

October 22, 2015

Dear Mr. Bulmahn:

Third Quarter 2015 Self-Monitoring Report
Bridgeton Landfill, LLC - Discharge Permit No. 1003803000 - 1

On behalf of Bridgeton Landfill, LLC, Herst & Associates, Inc. is submitting the Self-Monitoring Report for the third quarter 2015 leachate sampling at the Bridgeton Landfill.

On September 8 - 9, 2015, Herst & Associates, Inc. collected a composite sample of treated leachate from Bridgeton Landfill sampling points 013 and 014 for analysis of radioactive constituents, as required by Permit No. 1003803000 - 1. In accordance with a March 21, 2014 phone conversation between Mr. Ed Galbraith of Barr and the Missouri Department of Natural Resources (MDNR), additional composite samples were collected from sampling points 013 and 014 for analysis of total dissolved solids (TDS) and total suspended solids (TSS), concurrently with the collection of the composite samples for radioactive constituent analysis. All composite samples were analyzed by Eberline.

The analytical results of the sampling at points 013 and 014 indicate that the concentrations of analyzed constituents are within permitted limits.

The Eberline laboratory analytical reports associated with the third quarter 2015 radiological samples collected by Herst & Associates, Inc. are available for access by MSD at the Barr FTP site. The files can be accessed through a Web browser at the following URL:

ftp://ftp.barr.com/bridgetonlandfill/2015%20Reports/2015_1021

During the third quarter 2015, Civil and Environmental Consultants, Inc. (CEC) collected third quarter 2015 samples from points 013 and 014 for analysis of all other permit-required constituents. The reports and spreadsheets associated with these samples are available at the Barr FTP site. The files can be accessed at the following URLs:

ftp://ftp.barr.com/bridgetonlandfill/2015%20Reports/2015_0715
through
ftp://ftp.barr.com/bridgetonlandfill/2015%20Reports/2015_1021

RECEIVED
OCT 23 2015
DIVISION OF
ENVIRONMENTAL COMPLIANCE

4631 North St. Peters Parkway
St. Charles, Missouri 63304

Telephone (636) 939-9111
Fax (636) 939-9757

Attachment A presents the MSD Industrial Self-Monitoring Report form and Radioactive Materials Discharge Report form for the third quarter 2015 sampling of points 013 and 014. **Attachments B** and **C** present the calculations used to determine the amount of radionuclide activity discharged and hauled, respectively, during the third quarter 2015. **Attachment D** presents monthly leachate volume records for the Bridgeton Landfill for July, August, and September 2015.

The gross gamma results presented in the report have also been qualified by Eberline. As reported in the lab report's case narrative:

> *Results for Thorium-234 are not true positives and should not be considered positive. This radionuclide was not detected and results are reported from the Canberra Apex Gamma MDA Report. The only positive gamma emitting radionuclide detected was Potassium-40. All other results reported are also not positive and are also reported from the Canberra Gamma Apex MDA Report. Potassium-40 was used as the Gross Gamma results except for the method blank. Gross Gamma for the method blank was reported from Cesium-134 for method sensitivity demonstration only. The method blank demonstrated acceptable results for all radionuclides as reported.*

The gamma results have been noted as qualified on the forms presented in **Attachment A**.

Please contact Derek Bouchard, Environmental Specialist at 314-302-3634 if you have any questions or comments.

Sincerely,

HERST & ASSOCIATES, INC.

for

Ward E. Herst
Managing Partner

Andrew Wyatt
Senior Environmental Scientist

Cc: Derek Bouchard – Bridgeton Landfill, LLC
John Haasis – St. Louis County Department of Health

Attachments: A – MSD Industrial User Reporting Forms
B – Calculations of Discharged Activity
C – Calculations of Hauled Activity
D – Monthly Leachate Volume Records

RECEIVED
OCT 23 2015
DIVISION OF
ENVIRONMENTAL COMPLIANCE

METROPOLITAN ST. LOUIS SEWER DISTRICT
INDUSTRIAL USER SELF MONITORING REPORT

PART I: IDENTIFYING INFORMATION

Company Name: BRIDGETON LANDFILL LLC

Permit No: **1003803000 – 1** Effective Date: **September 1, 2014** Expiration Date: **August 31, 2019**
Premise Address: 13570 St. Charles Rock Road

Monitoring Period: ☐ (JAN-MAR) ☐ (APR-JUNE) ☑ (JULY-SEPT) ☐ (OCT-DEC)

Samples Collected By: **Ward Herst, John Regan, Jon Wilkinson - Herst & Associates, Inc.**

Analyses Performed By: **Eberline Services**

PART II: ANALYTICAL RESULTS OF SELF MONITORING

MSD SAMPLE POINT REFERENCE NUMBERS ⇨		014		013				
DATES ON WHICH SAMPLES WERE COLLECTED ⇨		9/8 - 9/9/2015		9/8 - 9/9/2015				
TIMES AT WHICH SAMPLES WERE COLLECTED ⇨		1150, 1500, 0950, 1145		1200, 1510, 1000, 1155				
PARAMETER	LIMIT	RECORD SAMPLE TYPES (G, C, M OR E) AND RESULTS BELOW (G=grab, C=composite, M=measured flow, E=estimated flow)						UNITS
FLOW			N/A		257,939			GPD
pH Acidic (≤7)	5.5	G		G				SU
pH Basic(≥7)	11.5	G	8.91	G	8.08			SU
Temperature	60	G	28.0	G	37.6			°C
Total Dissolved Solids	***	C	8,590	C	11,400			mg/L
Total Suspended Solids	***	C	6,410	C	204			mg/L
Gross Alpha	***	C	< MDA	C	< MDA			pCi/L
Gross Beta	***	C	240 ± 40.4	C	207 ± 42.7			pCi/L
Gross Gamma	***	C	168 ± 66.7	C	234 ± 64.1			pCi/L
Radium – 226	600	C	2.08 ± 0.95	C	< MDA			pCi/L
Radium – 228	600	C	1.76 ± 0.89	C	< MDA			pCi/L
Uranium (Total)		C	< MDA	C	1.73 ± 0.05			µg/L
Uranium (Natural)	3000	C	< MDA	C	0.37 ± 0.31			pCi/L

Already Entered On 10-22-15 Report - CB

RECEIVED
OCT 23 2015
DIVISION OF
ENVIRONMENTAL COMPLIANCE

You must complete and sign the certification statements on the second page.

CB

PART III: SPECIAL CERTIFICATION STATEMENTS

Based on the special conditions contained in your discharge permit you may be required to certify the following.
Please review your permit and **PLACE YOUR INITIALS ON THE LINES NEXT TO THE CERTIFICATIONS.**

O	NO DISCHARGE OF HAZARDOUS HAULED WASTE
	For permit special conditions that prohibit discharge of hazardous waste to the District, you are required to make the following certification:
	BP I certify, since the last discharge monitoring report, there has been no discharge of hazardous waste to the District.

PART IV: GENERAL CERTIFICATION STATEMENTS

B	DISCHARGE MONITORING REPORT CERTIFICATION
	All permittees must sign and complete the information below:
	I certify under penalty of Law that this document and all attachments were prepared under my direction or supervision in accordance with a system designed to assure that qualified personnel properly gather and evaluate the information submitted. Based on my inquiry of the person or persons who manage the system, or those persons directly responsible for gathering the information, the information submitted is, to the best of my knowledge and belief, true, accurate, and complete. I am aware that there are significant penalties for submitting false information, including the possibility of fine and imprisonment for knowing violations.
	Print or type name of signing official: **Brian Power**
	Title: **Environmental Manager** Telephone: **618-410-0157**
	Signature: Brian J. Power Date: 10/22/2015

RECEIVED

OCT 23 2015

DIVISION OF
ENVIRONMENTAL COMPLIANCE

METROPOLITAN ST. LOUIS SEWER DISTRICT
INDUSTRIAL USER RADIOACTIVE MATERIALS DISCHARGE REPORT

Part I: Identifying Information

Company Name: Bridgeton Landfill, LLC

Permit No.: 1003803000 - 1

Premise Address: 13570 St. Charles Rock Road, Bridgeton, MO 63044

Monitoring Period: ☐ (Jan-Mar) ☐ (Apr-Jun) ☒ (July-Sept) ☐ (Oct-Dec)

Part II: Record of Disposal of Radioactive Materials to the Sewer System

Radionuclide	Activity Discharged (Picocuries)
Gross Alpha	N/A
Gross Beta	2.70×10^{10}
Gross Gamma	2.69×10^{10}
Radium - 226	7.46×10^{7}
Radium - 228	6.31×10^{7}
Total Uranium (Uranium – 234 plus Uranium – 235 plus Uranium – 238)	3.29×10^{7}
Total Activity Discharged :	5.41×10^{10}

Notes:
N/A: Not applicable. Constituent below Minimum Detectable Activity.

Part III: Certification Statements

Place your initials in the box under item A.
Everyone must complete the information under items A & B and sign this report.

A. Certification of Compliance with Federal regulations

☒ I certify that to the best of my knowledge & belief, all requirements of 10 CFR Part 20, Appendix B, Table 3 governing disposal by release into sanitary sewage for material regulated by the Nuclear Regulatory Commission have been met for the period covered by this report.

B. Radioactive Materials Discharge Report Certification

I certify under penalty of Law that this document and all attachments were prepared under my direction or supervision in accordance with a system designed to assure that qualified personnel properly gather and evaluate the information submitted. Based on my inquiry of the person or persons who manage the system, or those persons directly responsible for gathering the information submitted is , to the best of my knowledge and belief, true c, accurate, and complete. I am aware that there are significant penalties for submitting false information, including the possibility of fine and imprisonment for knowing violations.

Print or type name of signing official: Brian Power

Title: Environmental Manager Telephone: 618-410-0157

Signature: Brian J Power Date: 10/22/2015

RECEIVED

OCT 23 2015

DIVISION OF
ENVIRONMENTAL COMPLIANCE

MSD 033298

HERST & ASSOCIATES, INC.®

Global Presence
Personal Attention

Calculation of Discharged Activity
Bridgeton Landfill, LLC - Discharge Permit No. 1003803000 - 1

In accordance with Special Condition II.C.3 of the Bridgeton Landfill, LLC Hauled and Industrial Wastewater Discharge Permit (Permit No. 1003803000 - 1), each of the facility's quarterly self-monitoring reports shall specify the activity by radionuclide that is discharged to the Metropolitan St. Louis Sewer District (MSD) system during the reporting period. The methodology that was utilized to calculate the activity discharged from the Bridgeton Landfill during the third quarter 2015 is described below. (A separate calculation is utilized to determine the activity by radionuclide that is hauled to MSD facilities during the reporting period [see **Attachment 4**]).

The discharged activity for each radionuclide is determined by multiplying the activity concentration for the reporting period by the total volume that was discharged during the reporting period:

Discharged Activity = Activity Concentration × Discharged Volume

As presented in the laboratory analytical reports accessible on the Barr Engineering Company (Barr) FTP site, Eberline Services (Eberline) reported the following radionuclide activity concentrations from the composite samples collected on September 8 - 9, 2015 from leachate sampling point 013:

Constituent	Result	Units
Gross Alpha	< MDA	pCi/L
Gross Beta	207 ± 42.7	pCi/L
Gross Gamma	234 ± 64.1	pCi/L
Radium - 226	< MDA	pCi/L
Radium - 228	< MDA	pCi/L
Uranium - 234	0.37 + 0.31	pCi/L
Uranium - 235	< MDA	pCi/L
Uranium - 238	< MDA	pCi/L

Notes:
1 pCi = 1×10^{-12} Ci
MDA = Minimum Detectable Activity

Note that the gross gamma activity concentration presented above has been qualified by Eberline. As reported in the laboratory analytical report's case narrative:

> *Results for Thorium-234 are not true positives and should not be considered positive. This radionuclide was not detected and results are reported from the Canberra Apex Gamma MDA Report. The only positive gamma emitting radionuclide detected was Potassium-40. All other results reported are also not positive and are also reported from the Canberra Gamma Apex MDA Report. Potassium-40 was used as the Gross Gamma results except for the method blank. Gross Gamma for the method blank was reported from Cesium-134 for method sensitivity demonstration only. The method blank demonstrated acceptable results for all radionuclides as reported.*

RECEIVED
OCT 23 2015
DIVISION OF
ENVIRONMENTAL COMPLIANCE

4631 North St. Peters Parkway
St. Charles, Missouri 63304

Telephone (636) 939-9111
Fax (636) 939-9757

As presented in **Attachment 5**, the following monthly volumes were discharged through leachate sampling point 013 during the third quarter 2015:

Month	Volume Discharged (gal)
July 2015	8,106,230
August 2015	7,730,171
September 2015	7,678,170

The total volume discharged during the third quarter 2015 is therefore:

$$8{,}106{,}230 \text{ gal} + 7{,}730{,}171 \text{ gal} + 7{,}678{,}170 \text{ gal} = 23{,}514{,}571 \text{ gal}$$

Given that activity concentration results are presented in pCi/L, the total volume discharged is converted from gallons to liters prior to the calculation of discharged activity:

$$22{,}514{,}571 \text{ gal} \times \frac{3.785 \text{ L}}{\text{gal}} = 89{,}012{,}334 \text{ L}$$

For radionuclides with reported activity concentrations greater than the MDA, the discharge activity can then be calculated as the product of the activity concentration and total volume discharged:

For gross beta:

$$207 \text{ pCi/L} \times 89{,}012{,}334 \text{ L} = 1.84 \times 10^{10} \text{ pCi}$$

For gross gamma:

$$234 \text{ pCi/L} \times 89{,}012{,}334 \text{ L} = 2.08 \times 10^{10} \text{ pCi}$$

For uranium-234:

$$0.37 \text{ pCi/L} \times 89{,}012{,}334 \text{ L} = 3.29 \times 10^{7} \text{ pCi}$$

(No calculation is performed for those radionuclides with reported activity concentrations less than the MDA: gross alpha, radium-226, radium-228, uranium-235, or uranium-238.)

The individual discharge activities for gross beta, gross gamma, and total uranium are then summed to determine the total discharged activity for the third quarter 2015:

$$(1.84 \times 10^{10} \text{ pCi}) + (2.08 \times 10^{10} \text{ pCi}) + (3.29 \times 10^{7} \text{ pCi}) = \mathbf{3.93 \times 10^{10} \text{ pCi}}$$

RECEIVED
OCT 23 2015
DIVISION OF
ENVIRONMENTAL COMPLIANCE

HERST & ASSOCIATES, INC.®

Global Presence
Personal Attention

Calculation of Hauled Activity
Bridgeton Landfill, LLC - Discharge Permit No. 1003803000 - 1

In accordance with Special Condition II.C.3 of the Bridgeton Landfill, LLC Hauled and Industrial Wastewater Discharge Permit (Permit No. 1003803000 - 1), each of the facility's quarterly self-monitoring reports shall specify the activity by radionuclide that is hauled to Metropolitan St. Louis Sewer District (MSD) facilities during the reporting period. The methodology that was utilized to calculate the activity hauled from the Bridgeton Landfill during the third quarter 2015 is described below. (A separate calculation is utilized to determine the activity by radionuclide that is discharged to the MSD sewer system during the reporting period [see **Attachment 3**]).

The hauled activity for each radionuclide is determined by multiplying the activity concentration for the reporting period by the total volume that was hauled during the reporting period:

$$\text{Hauled Activity} = \text{Activity Concentration} \times \text{Hauled Volume}$$

As presented in the laboratory analytical reports accessible on the Barr Engineering Company (Barr) FTP site, Eberline Services (Eberline) reported the following radionuclide activity concentrations from the composite samples collected on September 8 - 9, 2015 from leachate sampling point 014:

Constituent	Result	Units
Gross Alpha	< MDA	pCi/L
Gross Beta	240 ± 40.4	pCi/L
Gross Gamma	168 ± 66.7	pCi/L
Radium - 226	2.08 ± 0.95	pCi/L
Radium - 228	1.76 ± 0.89	pCi/L
Uranium - 234	< MDA	pCi/L
Uranium - 235	< MDA	pCi/L
Uranium - 238	< MDA	pCi/L

Notes:
1 pCi = 1×10^{-12} Ci
MDA = Minimum Detectable Activity

Note that the gross gamma activity concentration presented above has been qualified by Eberline. As reported in the laboratory analytical report's case narrative:

> *Results for Thorium-234 are not true positives and should not be considered positive. This radionuclide was not detected and results are reported from the Canberra Apex Gamma MDA Report. The only positive gamma emitting radionuclide detected was Potassium-40. All other results reported are also not positive and are also reported from the Canberra Gamma Apex MDA Report. Potassium-40 was used as the Gross Gamma results except for the method blank. Gross Gamma for the method blank was reported from Cesium-134 for method sensitivity demonstration only. The method blank demonstrated acceptable results with radionuclides as reported.*

RECEIVED
OCT 23 2015
DIVISION OF
ENVIRONMENTAL COMPLIANCE

4631 North St. Peters Parkway
St. Charles, Missouri 63304

Telephone (636) 939-9111
Fax (636) 939-9757

As presented in **Attachment 5**, the following monthly volumes were hauled from the Bridgeton Landfill to MSD facilities during the third quarter 2015:

Month	Volume Hauled (gal)
July 2015	5,445,000
August 2015	4,027,500
September 2015	0

The total volume hauled during the third quarter 2015 is therefore:

$$5{,}445{,}000 \text{ gal} + 4{,}027{,}500 \text{ gal} + 0 \text{ gal} = 9{,}472{,}500 \text{ gal}$$

Given that activity concentration results are presented in pCi/L, the total volume hauled is converted from gallons to liters prior to the calculation of hauled activity:

$$9{,}472{,}500 \text{ gal} \times \frac{3.785 \text{ L}}{\text{gal}} = 35{,}857{,}313 \text{ L}$$

For radionuclides with reported activity concentrations greater than the MDA, the hauled activity can then be calculated as the product of the activity concentration and total volume hauled:

For gross beta:

$$240 \text{ pCi/L} \times 35{,}857{,}313 \text{ L} = 8.61 \times 10^9 \text{ pCi}$$

For gross gamma:

$$168 \text{ pCi/L} \times 35{,}857{,}313 \text{ L} = 6.02 \times 10^9 \text{ pCi}$$

For radium-226:

$$2.08 \text{ pCi/L} \times 35{,}857{,}313 \text{ L} = 7.46 \times 10^7 \text{ pCi}$$

For radium-228:

$$1.76 \text{ pCi/L} \times 35{,}914{,}094 \text{ L} = 6.31 \times 10^7 \text{ pCi}$$

(No calculation is performed for those radionuclides with reported activity concentrations less than the MDA: gross alpha, uranium-234, uranium-235, or uranium-236.)

The individual hauled activities for gross beta, gross gamma, radium-226, and radium-228 are then summed to determine the total hauled activity for the third quarter 2015:

$$(8.61 \times 10^9 \text{ pCi}) + (6.02 \times 10^9 \text{ pCi}) + (7.46 \times 10^7 \text{ pCi}) + (6.31 \times 10^7 \text{ pCi}) = \mathbf{1.48 \times 10^{10} \text{ pCi}}$$

RECEIVED
OCT 23 2015
DIVISION OF
ENVIRONMENTAL COMPLIANCE

Hauled Disposal to MSD – Bissell Point

Date	Waste	Source	Transporter	Quantity
7/1/2015	LPTP Activated Sludge/ Permeate	MSD Sample Point 014	MBI	142,500
7/2/2015				142,500
7/3/2015				172,500
7/4/2015				0
7/5/2015				210,000
7/6/2015				330,000
7/7/2015				142,500
7/8/2015				142,500
7/9/2015				142,500
7/10/2015				262,500
7/11/2015				330,000
7/12/2015				330,000
7/13/2015				330,000
7/14/2015				330,000
7/15/2015				142,500
7/16/2015				135,000
7/17/2015				142,500
7/18/2015				0
7/19/2015				0
7/20/2015				142,500
7/21/2015				142,500
7/22/2015				247,500
7/23/2015				247,500
7/24/2015				247,500
7/25/2015				0
7/26/2015				0
7/27/2015				247,500
7/28/2015				225,000
7/29/2015				247,500
7/30/2015				142,500
7/31/2015				127,500
			Total =	5,445,000

Direct Discharge to MSD

Date	Waste	Source	Quantity (gal)
7/1/2015	LPTP Permeate, Cooling Water, and Flush Water	MSD Sample Point 013	154,193
7/2/2015			295,101
7/3/2015			324,931
7/4/2015			311,952
7/5/2015			285,862
7/6/2015			275,107
7/7/2015			247,978
7/8/2015			247,032
7/9/2015			255,930
7/10/2015			256,735
7/11/2015			188,972
7/12/2015			264,390
7/13/2015			265,225
7/14/2015			296,300
7/15/2015			275,655
7/16/2015			285,109
7/17/2015			280,559
7/18/2015			273,791
7/19/2015			278,312
7/20/2015			268,661
7/21/2015			250,213
7/22/2015			249,773
7/23/2015			294,061
7/24/2015			281,548
7/25/2015			262,315
7/26/2015			249,214
7/27/2015			245,099
7/28/2015			238,397
7/29/2015			231,447
7/30/2015			223,400
7/31/2015			248,968
		Total =	8,106,230

Hauled Disposal to MSD – Bissell Point

Date	Waste	Source	Transporter	Quantity
8/1/2015	LPTP Activated Sludge/ Permeate	MSD Sample Point 014	MBI	0
8/2/2015				0
8/3/2015				120,000
8/4/2015				135,000
8/5/2015				247,500
8/6/2015				247,500
8/7/2015				247,500
8/8/2015				330,000
8/9/2015				330,000
8/10/2015				187,500
8/11/2015				142,500
8/12/2015				142,500
8/13/2015				172,500
8/14/2015				187,500
8/15/2015				0
8/16/2015				0
8/17/2015				187,500
8/18/2015				187,500
8/19/2015				187,500
8/20/2015				172,500
8/21/2015				187,500
8/22/2015				285,000
8/23/2015				0
8/24/2015				0
8/25/2015				45,000
8/26/2015				187,500
8/27/2015				97,500
8/28/2015				0
8/29/2015				0
8/30/2015				0
8/31/2015				0
			Total =	4,027,500

Direct Discharge to MSD

Date	Waste	Source	Quantity (gal)
8/1/2015	LPTP Permeate, Cooling Water, and Flush Water	MSD Sample Point 013	43,343
8/2/2015			258,646
8/3/2015			229,041
8/4/2015			245,195
8/5/2015			268,088
8/6/2015			245,508
8/7/2015			247,130
8/8/2015			187,356
8/9/2015			197,153
8/10/2015			171,836
8/11/2015			178,491
8/12/2015			221,452
8/13/2015			229,811
8/14/2015			316,705
8/15/2015			335,489
8/16/2015			333,648
8/17/2015			332,174
8/18/2015			330,718
8/19/2015			329,004
8/20/2015			321,874
8/21/2015			308,126
8/22/2015			301,150
8/23/2015			294,342
8/24/2015			266,472
8/25/2015			0
8/26/2015			247,180
8/27/2015			227,965
8/28/2015			277,562
8/29/2015			274,574
8/30/2015			191,926
8/31/2015			318,262
		Total =	7,730,171

RECEIVED
OCT 23 2015
DIVISION OF
ENVIRONMENTAL COMPLIANCE

Hauled Disposal to MSD – Bissell Point

Date	Waste	Source	Transporter	Quantity
9/1/2015	LPTP Activated Sludge/ Permeate	MSD Sample Point 014	MBI	0
9/2/2015				0
9/3/2015				0
9/4/2015				0
9/5/2015				0
9/6/2015				0
9/7/2015				0
9/8/2015				0
9/9/2015				0
9/10/2015				0
9/11/2015				0
9/12/2015				0
9/13/2015				0
9/14/2015				0
9/15/2015				0
9/16/2015				0
9/17/2015				0
9/18/2015				0
9/19/2015				0
9/20/2015				0
9/21/2015				0
9/22/2015				0
9/23/2015				0
9/24/2015				0
9/25/2015				0
9/26/2015				0
9/27/2015				0
9/28/2015				0
9/29/2015				0
9/30/2015				0
			Total =	**0**

Direct Discharge to MSD

Date	Waste	Source	Quantity (gal)
9/1/2015	LPTP Permeate, Cooling Water, and Flush Water	MSD Sample Point 013	301,659
9/2/2015			142,339
9/3/2015			292,164
9/4/2015			290,917
9/5/2015			235,908
9/6/2015			240,680
9/7/2015			275,202
9/8/2015			282,875
9/9/2015			257,939
9/10/2015			306,092
9/11/2015			276,265
9/12/2015			265,995
9/13/2015			257,966
9/14/2015			296,710
9/15/2015			271,746
9/16/2015			118,605
9/17/2015			155,890
9/18/2015			203,717
9/19/2015			288,357
9/20/2015			289,822
9/21/2015			258,600
9/22/2015			295,352
9/23/2015			240,800
9/24/2015			287,491
9/25/2015			290,109
9/26/2015			260,674
9/27/2015			259,252
9/28/2015			228,461
9/29/2015			240,500
9/30/2015			266,083
		Total =	**7,678,170**

RECEIVED
OCT 23 2015
DIVISION OF
ENVIRONMENTAL COMPLIANCE

Doug Mendoza

From: Ed Galbraith <EGalbraith@barr.com>
Sent: Thursday, October 22, 2015 12:18 PM
To: Doug Mendoza
Cc: Bouchard, Derek (DBouchard@republicservices.com); bpower@republicservices.com; Kelly Caddy
Subject: RE: Amended: Bridgeton Landfill Weekly Report

CB 10-30

Doug, an amended report has been posted to the ftp site for the week of 2015_1021.

Ed Galbraith

Senior Environmental Consultant
Jefferson City, MO office: 573.638.5024
cell: 573.418.5562
egalbraith@barr.com
www.barr.com

resourceful. naturally. BARR

From: Doug Mendoza [mailto:DMENDOZA@stlmsd.com]
Sent: Thursday, October 22, 2015 7:06 AM
To: Ed Galbraith
Cc: Bouchard, Derek (DBouchard@republicservices.com); bpower@republicservices.com; Kelly Caddy
Subject: RE: Amended: Bridgeton Landfill Weekly Report

Ed,

Sorry. I saw the note on the spreadsheet, but it reads as pretty much a generic statement. I had forgotten about earlier discussions on it, but now remember.

However, in this instance regarding Th-234, I think a more specific statement is necessary. The crux is that Gross Gamma is the summation of all the individual gamma emitters tested, including Th-234. So when the Gross Gamma result doesn't correspond to the sum of the emitters listed around it, that raises questions for everyone (e.g. the public or others that are not familiar with the minutiae) that may see it.

The general statement seems sufficient for an explanation of why qualifiers are not necessarily included for each radionuclide. However, in the case where a result is completely omitted from the summed result, I think it really needs to be explicitly called out. Perhaps with a superscript after the "Thorium 234" that references a note below that says something like "Per analytical lab, not a true positive result and excluded from summation. See full laboratory report."

Please resubmit with a statement/qualifier that conveys why Th-234 was excluded from the Gross Gamma summation.

Doug Mendoza
MSD Industrial Pretreatment Manager

Hauled Waste Volume Summary				
Date	Batch I.D.	No. Of Trucks Hauled	Batch Volume (gal)	Daily Volume (gal)
10/15/2015	T1-140-AS	6	45,000	142,500
	HW	13	97,500	
10/14/2015	HW	13	97,500	142,500
	T1-139-AS	6	45,000	
10/13/2015	T1-139-AS	7	52,500	142,500
	HW	12	90,000	

Table 1

					Parameter	Biochemical Oxygen Demand (5-day)	Chemical Oxygen Demand	Cyanide	Nitrogen, ammonia as N	Oil and Grease	pH
					Total or Dissolved	NA	NA	NA	NA	NA	NA
Location	Date	Sample Collection Time	Lab Name	Data Status	Lab Report	mg/l	mg/l	mg/l	mg/l	mg/l	pH units
T1-140-AS	10/15/2015		Field	No QC	WASTE_2015	--	4420	--	--	--	7.67
HW	10/14/2015		Field	No QC	WASTE_2015	--	3260	--	--	--	7.66
T1-139-AS	10/13/2015		Field	No QC	WASTE_2015	--	8190	--	--	--	7.92
HW	10/12/2015		Field	No QC	WASTE_2015	--	2010	--	--	--	8.03
T2-138-AS	10/08/2015	6:30 AM	PDC	Validated	5101223	980 *	8300	--	--	--	--
T2-138-AS	10/08/2015		Field	No QC	WASTE_2015	--	2320	--	--	--	8.14

MSD 033307

Table 1

					Parameter	Phenolics	Solids, total suspended	Temperature, °C	Total Toxic Organics	Ultraviolet absorbance at 254 nm	Antimony	Arsenic
					Total or Dissolved	NA	NA	NA	NA	NA	Total	Total
Location	Date	Sample Collection Time	Lab Name	Data Status	Lab Report	mg/l	mg/l	deg C	ug/l	cm-1	mg/l	mg/l
T1-140-AS	10/15/2015		Field	No QC	WASTE_2015	--	20480	32.0	--	--	--	--
HW	10/14/2015		Field	No QC	WASTE_2015	--	18980	31.8	--	--	--	--
T1-139-AS	10/13/2015		Field	No QC	WASTE_2015	--	50080	33.3	--	--	--	--
HW	10/12/2015		Field	No QC	WASTE_2015	--	18080	35.6	--	--	--	--
T2-138-AS	10/08/2015	6:30 AM	PDC	Validated	5101223	--	19000	27.3	--	--	--	--
T2-138-AS	10/08/2015		Field	No QC	WASTE_2015	--	18900	34.2	--	--	--	--

MSD 033308

Table 1
RadChem Data

Location	013				014			
Date	9/09/2015				9/09/2015			
lab_name_code	Eberline	Eberline - MDA	Eberline	Eberline - MDA	Eberline	Eberline - MDA	Eberline	Eberline - MDA
Sample Type	DO	DO	DUP	DUP	DO	DO	DUP	DUP
Data Status	Validated	Validated	Validated	Validated	Validated	Validated	Validated	Validated
lab_sdg	15-09080-OR	15-09080-OR	15-09080-OR	15-09080-OR	15-09080-OR	15-09080-OR	15-09080-OR	15-09080-OR
Parameter								
General Parameters								
Solids, total dissolved	11400 mg/l		--		8590 mg/l		--	
Solids, total suspended	204 mg/l		--		6410 mg/l		--	
Radiochemical Parameters								
Actinium-228	13.1 +/- 10.5 pCi/l	20.7 pCi/l	--		12.1 +/- 11.6 pCi/l	21.5 pCi/l	3.75 +/- 11.5 pCi/l	19.4 pCi/l
Bismuth 212	-1.07 +/- 24.2 pCi/l	37.7 pCi/l	--		-9.90 +/- 24.2 pCi/l	35.4 pCi/l	6.00 +/- 22.3 pCi/l	37.1 pCi/l
Bismuth 214	4.98 +/- 5.77 pCi/l	9.58 pCi/l	--		3.39 +/- 6.23 pCi/l	10.4 pCi/l	5.22 +/- 6.77 pCi/l	11.3 pCi/l
Gross Alpha (radiation)	7.68 +/- 28.2 pCi/l	65.1 pCi/l	--		16.1 +/- 19.0 pCi/l	35.6 pCi/l	10.6 +/- 23.0 pCi/l	50.8 pCi/l
Gross Beta (radiation)	207 +/- 51.4 pCi/l	66.6 pCi/l	--		240 +/- 52.2 pCi/l	61.8 pCi/l	208 +/- 48.6 pCi/l	61.5 pCi/l
Gross Gamma	234 +/- 65.2 pCi/l	65.4 pCi/l	--		168 +/- 67.2 pCi/l	90.4 pCi/l	249 +/- 68.2 pCi/l	69.5 pCi/l
Lead 212	7.96 +/- 4.73 pCi/l	7.96 pCi/l	--		-2.21 +/- 4.85 pCi/l	6.96 pCi/l	2.98 +/- 4.55 pCi/l	7.17 pCi/l
Lead 214	5.77 +/- 6.36 pCi/l	10.3 pCi/l	--		6.42 +/- 7.06 pCi/l	11.7 pCi/l	1.41 +/- 6.17 pCi/l	9.56 pCi/l
Potassium 40	234 +/- 65.2 pCi/l	65.4 pCi/l	--		168 +/- 67.2 pCi/l	90.4 pCi/l	249 +/- 68.2 pCi/l	69.5 pCi/l
Radium 226	0.378 +/- 0.529 pCi/l	0.797 pCi/l	0.168 +/- 0.386 pCi/l	0.749 pCi/l	2.08 +/- 1.05 pCi/l	0.608 pCi/l	--	
Radium 228	1.69 +/- 1.71 pCi/l	3.39 pCi/l	3.01 +/- 1.58 pCi/l	2.73 pCi/l	1.76 +/- 0.977 pCi/l	1.70 pCi/l	--	
Thallium 208	3.99 +/- 7.39 pCi/l	12.7 pCi/l	--		10.2 +/- 9.00 pCi/l	15.9 pCi/l	7.33 +/- 8.21 pCi/l	14.4 pCi/l
Thorium 234	114 +/- 65.1 pCi/l (3)	92.4 pCi/l	--		79.3 +/- 66.9 pCi/l	90.4 pCi/l	98.7 +/- 66.6 pCi/l (3)	92.1 pCi/l
Uranium total	1.73 +/- 0.198 ug/l	1.00 ug/l	--		0.468 +/- 0.0530 ug/l	1.00 ug/l	0.498 +/- 0.0565 ug/l	1.00 ug/l
Uranium 234 (2)	0.365 +/- 0.315 pCi/l	0.308 pCi/l	--		0.291 +/- 0.303 pCi/l	0.429 pCi/l	0.506 +/- 0.398 pCi/l	0.471 pCi/l
Uranium 235 (1)	-1.67 +/- 12.1 pCi/l	19.8 pCi/l	--		2.66 +/- 12.7 pCi/l	21.2 pCi/l	3.21 +/- 11.0 pCi/l	18.7 pCi/l
Uranium 235 (2)	0.132 +/- 0.224 pCi/l	0.380 pCi/l	--		0.232 +/- 0.280 pCi/l	0.394 pCi/l	-0.0652 +/- 0.161 pCi/l	0.459 pCi/l
Uranium 238 (2)	0.288 +/- 0.287 pCi/l	0.337 pCi/l	--		0.197 +/- 0.225 pCi/l	0.296 pCi/l	0.340 +/- 0.303 pCi/l	0.325 pCi/l
Uranium Natural	0.365 +/- 0.315 pCi/l	0.308 pCi/l	--		<MDA		0.506 +/- 0.398 pCi/l	0.471 pCi/l

Note: All data in this table are taken from radiochemistry analytical reports with accompanying written narratives that are an integral part of the entire data package. Written narratives contain important information regarding the quality and usability of the data. No interpretation, conclusion or decision should be made based solely on the data tables apart from the entire report package. The laboratory name and report number are included at the top of each column. Report packages are posted at:

ftp://ftp.barr.com/bridgetonlandfill/2015%20Reports/
User: blfdata
Password: tran$fer!

(1) Uranium 235 by gamma spectroscopy Method EPA 901.1.
(2) Uranium 234, 235 and 238 by isotopic analysis EML U-02.
(3) Per analytical lab, not a true positive result and excluded from summation. See full laboratory report.

MSD 033309

Chain of Custody Record

№ 7049

Eberline Services
601 Scarboro Road
Oak Ridge, TN 37830
(865) 481-0683 Phone • (865) 483-4621 Fax

EBERLINE SERVICES

Page 1 of 1

15-09080
REC'D SEP 11 2015

Purchase Order #:

Project Name: Bridgeton 3015 leachate	Project Number:
Send Report To: Jon Wilkinson	Sampler (Print Name): Jon Wilkinson
Address: 4631 N. St. Peters Pkwy	Sampler (Print Name):
St. Charles, MO 63304	Shipment Method: FedEx
email: labdata@herstassociates.com	Airbill Number: 7744 2140 3099
Phone: (636) 939-9111	Laboratory Receiving:
Fax: (636) 939-9757	

Analysis Requested

Field Sample ID	Sample Date	Sample Time	Sample Matrix	Number of Containers	Gross Alpha	Gross Beta	Gross Gamma (Inc. Ba-212 & U-235)	Radium-226	Radium-228	Total Uranium by KPA	Uranium-234, -235, & -238	Total Dissolved Solids	Total Suspended Solids			Comments, Special Instructions, etc.	Lab Sample ID (to be completed by lab)
014 4	9/8-9/9/15	1150, 1300, 0950, 1145	Aqueous	3	X	X	X	X	X	X	X	X	X			pH: 8.91 temp: 28.0°C	
013 5	9/8-9/9/15	1200, 1510, 1000, 1155	Aqueous	3	X	X	X	X	X	X	X	X	X			pH: 8.08 temp: 37.6°C	

Relinquished by: (Signature)	Received by: (Signature)	Date:	Time:
[signature] / Jon Wilkinson / Herst + Assoc, Inc.	FedEx # 774421403099	9/9/15	1700
Relinquished by: (Signature)	Received by: (Signature) [signature]	9-11-15	1146
Relinquished by: (Signature)	Received by: (Signature)	Date:	Time:

Sample Custodian Remarks (Completed By Laboratory):

QA/QC Level	Turnaround	Sample Receipt	
Level I ☐	Routine ☐	Total # Containers Received?	
Level II ☐	24 Hour ☐	COC Seals Present?	
Level III ☐	1 Week ☐	COC Seals Intact?	
Other ☐	Other _____	Received Containers Intact?	
		Temperature?	

MSD 033310

TO: **File**

FROM: Angie McDonough amm

DATE: October 22, 2015

RE: **BRIDGETON LANDFILL LLC**
WASTEWATER USER CHARGE BILLING
ACCOUNT NUMBER 0039145-8

Pursuant to the MSD Industrial Wastewater Discharge Permit for the above referenced facility, this facility will be billed for the following charges for the indicated billing period:

DISCHARGE PERIOD: **August and September 2015**

BILLING IS FOR: **On- Site Special Discharge**

SAMPLE POINT: **013 - Commingled landfill leachate and landfill gas collection system condensate.**

Billing Item	Quantity	Units	Rate	Charge
Volume Sep 2015	10,265	CcF	$ 3.21 /CcF	$32,950.65
COD Extra-Strength Surcharge	3,562	mg/L	$316.19 /ton	$29,994.85
Aug Volume Adjustment (subject to surcharge)	1,213	CcF	$ 3.21 /CcF	$3,893.73
Aug Adjustment COD surcharge	2,930	mg/L	$316.19 /ton	$2,788.17
Aug Volume Adjustment (not subject to surcharge)	134	CcF	$ 3.21 /CcF	$430.14
Total	--	--	--	**$70,057.54**

If you have any questions, please call me at extension 8762.

bv

ec: Brian Gibson
Doug Mendoza
Bridgeton Republic Services

FILE: IU, Bridgeton Landfill LLC, 1003-8030-00

Doug Mendoza

From: Ed Galbraith <EGalbraith@barr.com>
Sent: Thursday, October 22, 2015 7:31 AM
To: Doug Mendoza
Cc: Bouchard, Derek (DBouchard@republicservices.com); bpower@republicservices.com; Kelly Caddy
Subject: RE: Amended: Bridgeton Landfill Weekly Report

OK< will do.

Ed Galbraith

Senior Environmental Consultant
Jefferson City, MO office: 573.638.5024
cell: 573.418.5562
egalbraith@barr.com
www.barr.com

resourceful. naturally. BARR

From: Doug Mendoza [mailto:DMENDOZA@stlmsd.com]
Sent: Thursday, October 22, 2015 7:06 AM
To: Ed Galbraith
Cc: Bouchard, Derek (DBouchard@republicservices.com); bpower@republicservices.com; Kelly Caddy
Subject: RE: Amended: Bridgeton Landfill Weekly Report

Ed,

Sorry. I saw the note on the spreadsheet, but it reads as pretty much a generic statement. I had forgotten about earlier discussions on it, but now remember.

However, in this instance regarding Th-234, I think a more specific statement is necessary. The crux is that Gross Gamma is the summation of all the individual gamma emitters tested, including Th-234. So when the Gross Gamma result doesn't correspond to the sum of the emitters listed around it, that raises questions for everyone (e.g. the public or others that are not familiar with the minutiae) that may see it.

The general statement seems sufficient for an explanation of why qualifiers are not necessarily included for each radionuclide. However, in the case where a result is completely omitted from the summed result, I think it really needs to be explicitly called out. Perhaps with a superscript after the "Thorium 234" that references a note below that says something like "Per analytical lab, not a true positive result and excluded from summation. See full laboratory report."

Please resubmit with a statement/qualifier that conveys why Th-234 was excluded from the Gross Gamma summation.

Doug Mendoza
MSD Industrial Pretreatment Manager

Doug Mendoza

From: Doug Mendoza
Sent: Thursday, October 22, 2015 7:06 AM
To: 'Ed Galbraith'
Cc: Bouchard, Derek (DBouchard@republicservices.com); bpower@republicservices.com; Kelly Caddy
Subject: RE: Amended: Bridgeton Landfill Weekly Report

Ed,

Sorry. I saw the note on the spreadsheet, but it reads as pretty much a generic statement. I had forgotten about earlier discussions on it, but now remember.

However, in this instance regarding Th-234, I think a more specific statement is necessary. The crux is that Gross Gamma is the summation of all the individual gamma emitters tested, including Th-234. So when the Gross Gamma result doesn't correspond to the sum of the emitters listed around it, that raises questions for everyone (e.g. the public or others that are not familiar with the minutiae) that may see it.

The general statement seems sufficient for an explanation of why qualifiers are not necessarily included for each radionuclide. However, in the case where a result is completely omitted from the summed result, I think it really needs to be explicitly called out. Perhaps with a superscript after the "Thorium 234" that references a note below that says something like "Per analytical lab, not a true positive result and excluded from summation. See full laboratory report."

Please resubmit with a statement/qualifier that conveys why Th-234 was excluded from the Gross Gamma summation.

Doug Mendoza
MSD Industrial Pretreatment Manager

From: Ed Galbraith [mailto:EGalbraith@barr.com]
Sent: Wednesday, October 21, 2015 3:12 PM
To: Doug Mendoza
Cc: Bouchard, Derek (DBouchard@republicservices.com); bpower@republicservices.com; Kelly Caddy
Subject: RE: Amended: Bridgeton Landfill Weekly Report

Doug,
Just want to refer you to the attached email from 8/7/2015. We can and will amend the reports to notate the Th-234 results if you need us to, however to be consistent, we'll need to do the same for all parameters for which some narrative qualification has been provided in previous reports. If you would, please give it a another read and let me know what you think. Thanks.

Ed Galbraith

Senior Environmental Consultant
Jefferson City, MO office: 573.638.5024
cell: 573.418.5562
egalbraith@barr.com
www.barr.com

Doug Mendoza

From: Ed Galbraith <EGalbraith@barr.com>
Sent: Wednesday, October 21, 2015 3:12 PM
To: Doug Mendoza
Cc: Bouchard, Derek (DBouchard@republicservices.com); bpower@republicservices.com; Kelly Caddy
Subject: RE: Amended: Bridgeton Landfill Weekly Report
Attachments: FW: Bridgeton Landfill Weekly Report

Doug,
Just want to refer you to the attached email from 8/7/2015. We can and will amend the reports to notate the Th-234 results if you need us to, however to be consistent, we'll need to do the same for all parameters for which some narrative qualification has been provided in previous reports. If you would, please give it a another read and let me know what you think. Thanks.

Ed Galbraith

Senior Environmental Consultant
Jefferson City, MO office: 573.638.5024
cell: 573.418.5562
egalbraith@barr.com
www.barr.com

resourceful. naturally. BARR

From: Doug Mendoza [mailto:DMENDOZA@stlmsd.com]
Sent: Wednesday, October 21, 2015 1:31 PM
To: Ed Galbraith; John Lodderhose; Brian G. Gibson; Michael Grace; Nora C. Estopare; Rob G Daly; 'Tippett Mosby, Leanne (Leanne.TippettMosby@dnr.mo.gov)'; 'Aaron Schmidt'; 'Nagel, Chris (Christopher.Nagel@dnr.mo.gov)'; 'bpower@republicservices.com'; 'Getting, James'; 'Bouchard, Derek (DBouchard@republicservices.com)'; 'Kamp, Kevin'; 'LaFata, Natalie'; 'Cooper, Ivan (icooper@cecinc.com)'; 'lwright@cecinc.com'; Kelly Caddy; Dana B. Pasi; Christopher J. Bulmahn; Ken Gambaro; Mike Townley; 'lwright@cecinc.com'; Andrea A. Nord; Becca Coyle; 'koleary@cecinc.com'; 'sgraves@cecinc.com'; 'awyatt@herstassociates.com'
Subject: RE: Amended: Bridgeton Landfill Weekly Report

The radchem results show a Thorium-234 result of 114 pCi/L. However this value is not included as part of the Gross Gamma result. I believe your analytical laboratory has determined the result for Thorium-234 to not be a true positive. However, the reported result is notated in any manner. Please provide appropriate explanation with the reported results for Thorium-234.

Sincerely,
Doug Mendoza
MSD Industrial Pretreatment Manager

From: Ed Galbraith [mailto:EGalbraith@barr.com]
Sent: Wednesday, October 21, 2015 9:39 AM
To: Doug Mendoza; John Lodderhose; Brian G. Gibson; Michael Grace; Nora C. Estopare; Rob G Daly; 'Tippett Mosby, Leanne (Leanne.TippettMosby@dnr.mo.gov)'; 'Aaron Schmidt'; 'Nagel, Chris (Christopher.Nagel@dnr.mo.gov)';

Doug Mendoza

From: Ed Galbraith <EGalbraith@barr.com>
Sent: Friday, August 07, 2015 10:11 AM
To: Doug Mendoza
Cc: 'Bouchard, Derek (DBouchard@republicservices.com)'
Subject: FW: Bridgeton Landfill Weekly Report

Doug,

By the time we had crafted an explanation for the Gross Gamma and a qualifier for the Thorium 234 to go with the existing qualifier for Gross Alpha, the table was in a pretty confused state. The long explanations involved don't lend themselves well to the traditional wet chemistry qualifiers, which are more or less standardized. My preference would be to place a note at the bottom of the radchem table as follows:

"Note: All data in this table are taken from radiochemistry analytical reports with accompanying written narratives that are an integral part of the entire data package. Written narratives contain important information regarding the quality and usability of the data. No interpretation, conclusion or decision should be made based solely on the data tables apart from the entire report package. The laboratory name and report number are included at the top of each column. Report packages are posted at:

ftp://ftp.barr.com/bridgetonlandfill/2015%20Reports/
User: blfdata;
Password: tran$fer!

Would you agree that this provides adequate notification for the tables? For the quarterly report, we could be more complete and specific with the explanation since it has a narrative section.

Ed Galbraith

Senior Environmental Consultant
Jefferson City office: 573.638.5024
cell: 573.418.5562
egalbraith@barr.com
www.barr.com

resourceful. naturally. BARR

From: Doug Mendoza [mailto:DMENDOZA@stlmsd.com]
Sent: Thursday, August 06, 2015 12:55 PM
To: Ed Galbraith
Cc: Bouchard, Derek (DBouchard@republicservices.com); Kelly Caddy
Subject: RE: Bridgeton Landfill Weekly Report

You are correct that it has all become confusing. I now remember the earlier discussions re the TE/NORM waste analysis, but did not at the time I wrote back. Hopefully the final revision and spreadsheet with clarify everything!

---Doug

From: Ed Galbraith [mailto:EGalbraith@barr.com]
Sent: Thursday, August 06, 2015 12:48 PM
To: Doug Mendoza
Cc: Bouchard, Derek (DBouchard@republicservices.com); Kelly Caddy
Subject: RE: Bridgeton Landfill Weekly Report

The gross gamma value in the original report was an error because they used the wrong protocol. Had our sample been for TE/NORM waste analysis, e.g. oilfield waste, the value would have been correct, because K40 is not included in the gamma count for that type of material. I don't know why that is, but typically TE/NORM measures uranium, thorium, radium and lead-210 plus decay products , not K40.

So, since they used the wrong protocol, they miscalculated the gross gamma "for this project," as the Supplemental narrative states. The way I read it, the Supplemental narrative is intended to correct the original narrative, but they left the original in the report for continuity. It is confusing I grant you, but see highlighted red below which leads me to that conclusion.

So where did the gross gamma values come from in the original report, if not from K40? The final narrative states – "In the case of Gross Gamma results previously reported, results were derived using a NORM criteria from non-identified nuclides on the Canberra MDA report which included Lead-212, Lead-214 and Thorium-234." It goes on to say that these were not true positives.

I should mention here that the Eberline report that was on the ftp site for yesterday should not have been there as it contained a draft revision that should not have been included in a final report. That was my oversight and I apologize. I will post the corrected Version 4 and send out an email to the group.

My plan is to update the spreadsheet and quarterly report and footnote them as you suggest. Let me know if you have other thoughts or questions.

Thanks.

Ed Galbraith

Senior Environmental Consultant
Jefferson City office: 573.638.5024
cell: 573.418.5562
egalbraith@barr.com
www.barr.com

resourceful. naturally. BARR

From: Doug Mendoza [mailto:DMENDOZA@stlmsd.com]
Sent: Thursday, August 06, 2015 8:35 AM
To: Ed Galbraith

Cc: Bouchard, Derek (DBouchard@republicservices.com)
Subject: RE: Bridgeton Landfill Weekly Report

Ed,

I think Mr. McDougal provides a good high-level explanation of why the readings would not be considered valid for the gamma spectroscopy. I can't really speak to the gross alpha, since it's a separate analysis. However, regarding gamma, I think the results submitted to MSD probably should include a footnote that copies what Mr. McDougal states below. Eberline Labs would need to include this narrative as part of its notation for the results in the lab report it provides you.

But what also makes the 6/2/2015 (15-06016) gross gamma result different from past reported results is that the gross gamma value is not the same value as the K-40 value. This seems to contradict what is in the report narrative. The narrative itself seems to have contradictory statements (underlined by me below). Thus, I need some explanation – was the reported gross gamma in error, or is the narrative incorrect, or am I misunderstanding, or...?

The narrative:

GAMMA SPECTROSCOPY
Samples for Gamma Spectroscopy analysis were prepared by transferring a known aliquot of each sample to a standard geometry container. Samples were counted on a High Purity Germanium (HPGe) gamma ray detector.
Samples demonstrated acceptable results for all gamma-emitting radionuclides as reported. Gross Gamma results were calculated by summation of all reported values from the high resolution gamma spectroscopy. All results except Potassium-40 are non-detect; therefore, Gross Gamma results are also non-detect. The method blank demonstrated acceptable results for all radionuclides as reported. Results for the Actinium-228 and Potassium-40 replicate demonstrated an acceptable relative percent difference and normalized difference. Results for the Bismuth-214 replicate demonstrated a high relative percent difference; however, normalized difference is within acceptable limits for the analytical technique. Results for the Cobalt-60 and Cesium-137 laboratory control sample demonstrated an acceptable percent recovery.
GROSS GAMMA SUPPLEMENTAL
In the case of Gross Gamma results previously reported, results were derived using a NORM criteria from non-identified nuclides or the Canberra MDA report. **Results as derived were inconsistent with calculations of Gross Gamma for this project.** In all previous instances the laboratory only sums gamma emitting radionuclides that are true positive or denoted as representations of Gross Gamma for purposes of reporting results. In the case of water samples, it is very typical for the gamma spectroscopy results to derive pseudo positives based on the Canberra MDA Report. Appropriate qualification and subsequent calculation of gamma spectroscopy results for estimating Gross Gamma activity in a sample is always problematic for water samples. However, in general, since Potassium-40 is typically the only " true positive" for samples from this site, we have used this as the basis of Gross Gamma. **Therefore, we are modifying the previously submitted analytical report** to reflect this change. All Gross Gamma results are being reported from Potassium-40 since this is the only gamma emitting radionuclide present in these samples. **All previous Gross Gamma results should be disregarded** in lieu of revised Gross Gamma data within this supplemental report.

From: Ed Galbraith [mailto:EGalbraith@barr.com]
Sent: Wednesday, August 05, 2015 11:09 AM
To: Doug Mendoza
Cc: Bouchard, Derek (DBouchard@republicservices.com)
Subject: RE: Bridgeton Landfill Weekly Report

I sent an email to Mike McDougal with a screen shot of the Gamma scan results for 15-06016. I highlighted the results for certain Th234, Pb212 and Pb214 results that showed results greater than the MDA. My email stated:

"I know that the narrative states that K-40 is the only true positive. Nevertheless, I will be asked by the agency why Th234, Pb212 and Pb210 are not considered positive even though numerically the result is greater than the MDA. Unless there are other quantitative indicators in the data that would say otherwise, I think that we will have to consider those as positives in our gamma total. I'm not asking to you change anything, unless you see a way to clarify this. We ran into this issue on the most recent Gross Alpha results, which we had to report as positive, even though the narrative indicated they were not. Would you be willing to participate in a conference call with the agency to discuss this, if necessary?"

Mike's response was:

"Typical, most end users do not understand the Canberra algorithms or nuclear physics involved with making a gamma spectroscopy measurement. The fact of the matter is that if we were not required to report these, we would not have because they are not positive. They are simply a mathematical artifact of Canberra Gamma Apex software. Not to mention the secular equilibrium considerations with the parent nuclides done by chemistry and subsequent alpha spectroscopy. Using data is their prerogative; however, I will still qualify "non-detects" as appropriate. They need to understand the "technical" aspects behind our qualifications before they summarily reject such qualifications. I am always available for any conference call at your convenience."

At that point I tried to forward that email (three times in fact), but for some reason that it did not reach you. The point of forwarding his response is to request that MSD consider Eberline's response in how we approach these types of results. If a conference call with Eberline would be helpful, I would be glad to facilitate that.

Ed Galbraith

Senior Environmental Consultant
Jefferson City office: 573.638.5024
cell: 573.418.5562
egalbraith@barr.com
www.barr.com

resourceful. naturally. BARR

From: Ed Galbraith
Sent: Wednesday, August 05, 2015 10:48 AM
To: 'Doug Mendoza'
Subject: RE: Bridgeton Landfill Weekly Report

It wasn't a large file. Can't understand what is going on. I resent it, let me know if it doesn't come through.

Ed Galbraith

Senior Environmental Consultant
Jefferson City office: 573.638.5024

cell: 573.418.5562
egalbraith@barr.com
www.barr.com

resourceful. naturally. BARR

From: Doug Mendoza [mailto:DMENDOZA@stlmsd.com]
Sent: Wednesday, August 05, 2015 10:45 AM
To: Ed Galbraith
Subject: RE: Bridgeton Landfill Weekly Report

If it is more than 10Mb, it won't come through.

From: Ed Galbraith [mailto:EGalbraith@barr.com]
Sent: Wednesday, August 05, 2015 10:44 AM
To: Doug Mendoza
Subject: RE: Bridgeton Landfill Weekly Report

No its different. I'm going to copy and paste the email that I sent yesterday (and the day before) into a new email and resend. For some reason that one is getting filtered out.

Ed Galbraith

Senior Environmental Consultant
Jefferson City office: 573.638.5024
cell: 573.418.5562
egalbraith@barr.com
www.barr.com

resourceful. naturally. BARR

From: Doug Mendoza [mailto:DMENDOZA@stlmsd.com]
Sent: Wednesday, August 05, 2015 10:40 AM
To: Ed Galbraith
Subject: RE: Bridgeton Landfill Weekly Report

FYI, I never received the email you sent yesterday with Eberline's report. Is this the same one you reference below as posted on the FTP site?

From: Ed Galbraith [mailto:EGalbraith@barr.com]
Sent: Wednesday, August 05, 2015 10:23 AM
To: Doug Mendoza; John Lodderhose; Brian G. Gibson; Michael Grace; Nora C. Estopare; Rob G Daly; 'Tippett Mosby, Leanne (Leanne.TippettMosby@dnr.mo.gov)'; 'Aaron Schmidt'; 'Nagel, Chris (Christopher.Nagel@dnr.mo.gov)'; 'bpower@republicservices.com'; 'Getting, James'; 'Bouchard, Derek (DBouchard@republicservices.com)'; 'Kamp, Kevin'; 'LaFata, Natalie'; 'Cooper, Ivan (icooper@cecinc.com)'; 'lwright@cecinc.com'; Kelly Caddy; Dana B. Pasi; Christopher J. Bulmahn; Ken Gambaro; Mike Townley; 'lwright@cecinc.com'; Andrea A. Nord; Becca Coyle; 'koleary@cecinc.com'; 'sgraves@cecinc.com'; 'awyatt@herstassociates.com'
Subject: Bridgeton Landfill Weekly Report

The material for last week is posted to Barr's ftp site.

- You had also asked us to review the Gross Gamma results in Eberline's report because, as you noted, it did not appear to include K40 in the sum. According to Mike McDougal, Eberline has several protocols for reporting Gross Gamma. For some industries and applications only the uranium and thorium series are counted and K40 is not included. Oil field NORM is one example that he cited. He stated that the reviewer did not use the correct protocol for our sample They will amend the report and resubmit it. We will also submit a revised quarterly report using the revised data. Mike also indicated that, similar to Gross Alpha, there are some false positives among other gamma results. The results are based on an algorithm and are not indicators of true activity. **UPDATE: We expect the revised final report shortly and will update the spreadsheet and website and revise the quarterly report. There is a revised report posted this week with clarifications to the narrative for Gross Alpha, but does not have the updated results for Gross Gamma.**

The FTP site can be accessed as follows:

Copy this link and paste it into Windows Explorer (NOT Internet Explorer) ftp://ftp.barr.com/bridgetonlandfill/2015%20Reports/
User: blfdata;
Password: tran$fer!

Ed Galbraith

Senior Environmental Consultant
Jefferson City office: 573.638.5024
cell: 573.418.5562
egalbraith@barr.com
www.barr.com

resourceful. naturally. BARR

Doug Mendoza

From: Doug Mendoza
Sent: Wednesday, October 21, 2015 1:31 PM
To: 'Ed Galbraith'; John Lodderhose; Brian G. Gibson; Michael Grace; Nora C. Estopare; Rob G Daly; 'Tippett Mosby, Leanne (Leanne.TippettMosby@dnr.mo.gov)'; 'Aaron Schmidt'; 'Nagel, Chris (Christopher.Nagel@dnr.mo.gov)'; 'bpower@republicservices.com'; 'Getting, James'; 'Bouchard, Derek (DBouchard@republicservices.com)'; 'Kamp, Kevin'; 'LaFata, Natalie'; 'Cooper, Ivan (icooper@cecinc.com)'; 'lwright@cecinc.com'; Kelly Caddy; Dana B. Pasi; Christopher J. Bulmahn; Ken Gambaro; Mike Townley; 'lwright@cecinc.com'; Andrea A. Nord; Becca Coyle; 'koleary@cecinc.com'; 'sgraves@cecinc.com'; 'awyatt@herstassociates.com'
Subject: RE: Amended: Bridgeton Landfill Weekly Report

The radchem results show a Thorium-234 result of 114 pCi/L. However this value is not included as part of the Gross Gamma result. I believe your analytical laboratory has determined the result for Thorium-234 to not be a true positive. However, the reported result is notated in any manner. Please provide appropriate explanation with the reported results for Thorium-234.

Sincerely,
Doug Mendoza
MSD Industrial Pretreatment Manager

From: Ed Galbraith [mailto:EGalbraith@barr.com]
Sent: Wednesday, October 21, 2015 9:39 AM
To: Doug Mendoza; John Lodderhose; Brian G. Gibson; Michael Grace; Nora C. Estopare; Rob G Daly; 'Tippett Mosby, Leanne (Leanne.TippettMosby@dnr.mo.gov)'; 'Aaron Schmidt'; 'Nagel, Chris (Christopher.Nagel@dnr.mo.gov)'; 'bpower@republicservices.com'; 'Getting, James'; 'Bouchard, Derek (DBouchard@republicservices.com)'; 'Kamp, Kevin'; 'LaFata, Natalie'; 'Cooper, Ivan (icooper@cecinc.com)'; 'lwright@cecinc.com'; Kelly Caddy; Dana B. Pasi; Christopher J. Bulmahn; Ken Gambaro; Mike Townley; 'lwright@cecinc.com'; Andrea A. Nord; Becca Coyle; 'koleary@cecinc.com'; 'sgraves@cecinc.com'; 'awyatt@herstassociates.com'
Subject: Amended: Bridgeton Landfill Weekly Report

The material for last week will be posted to Barr's ftp site by noon today.

- Under tab 013, a column has been added for potable water that is introduced to the lift station after the FIT 420 meter.
- The most recent radchem results are posted for 013 and 014.
- At 014, sample T2-138-AS (10/8/2015) was qualified because the lab control sample failed low. Recovery was 81 % and the range was 84.6%-115.4%. This was from another sample in the QC batch, not the subject sample. The report noted that secondary QC was within acceptance criteria. Recall that this is the second sample taken for the month of October. The first sample (10/05/2015) was ND at <750 mg/l, which was a sample dilution issue. This sample result of 980 mg/l appears to be a valid result, and the QC batch issues do not involve Bridgeton Landfill's sample. Furthermore, the LCS recovery, while outside of the range, was within 5% of the range.

The FTP site can be accessed as follows:

Copy this link and paste it into Windows Explorer (NOT Internet Explorer) ftp://ftp.barr.com/bridgetonlandfill/2015%20Reports/
User: blfdata

Doug Mendoza

From: Ed Galbraith <EGalbraith@barr.com>
Sent: Wednesday, October 21, 2015 9:39 AM
To: Doug Mendoza; John Lodderhose; Brian G. Gibson; Michael Grace; Nora C. Estopare; Rob G Daly; 'Tippett Mosby, Leanne (Leanne.TippettMosby@dnr.mo.gov)'; 'Aaron Schmidt'; 'Nagel, Chris (Christopher.Nagel@dnr.mo.gov)'; 'bpower@republicservices.com'; 'Getting, James'; 'Bouchard, Derek (DBouchard@republicservices.com)'; 'Kamp, Kevin'; 'LaFata, Natalie'; 'Cooper, Ivan (icooper@cecinc.com)'; 'lwright@cecinc.com'; Kelly Caddy; Dana B. Pasi; Christopher J. Bulmahn; Ken Gambaro; Mike Townley; 'lwright@cecinc.com'; Andrea A. Nord; Becca Coyle; 'koleary@cecinc.com'; 'sgraves@cecinc.com'; 'awyatt@herstassociates.com'
Subject: Amended: Bridgeton Landfill Weekly Report

The material for last week will be posted to Barr's ftp site by noon today.

- Under tab 013, a column has been added for potable water that is introduced to the lift station after the FIT 420 meter.
- The most recent radchem results are posted for 013 and 014.
- At 014, sample T2-138-AS (10/8/2015) was qualified because the lab control sample failed low. Recovery was 81 % and the range was 84.6%-115.4%. This was from another sample in the QC batch, not the subject sample. The report noted that secondary QC was within acceptance criteria. Recall that this is the second sample taken for the month of October. The first sample (10/05/2015) was ND at <750 mg/l, which was a sample dilution issue. This sample result of 980 mg/l appears to be a valid result, and the QC batch issues do not involve Bridgeton Landfill's sample. Furthermore, the LCS recovery, while outside of the range, was within 5% of the range.

The FTP site can be accessed as follows:

Copy this link and paste it into Windows Explorer (NOT Internet Explorer) ftp://ftp.barr.com/bridgetonlandfill/2015%20Reports/
User: blfdata
Password: tran$fer!

Ed Galbraith

Senior Environmental Consultant
Jefferson City office: 573.638.5024
cell: 573.418.5562
egalbraith@barr.com
www.barr.com

resourceful. naturally. BARR

Doug Mendoza

From: Ed Galbraith <EGalbraith@barr.com>
Sent: Wednesday, October 21, 2015 9:03 AM
To: Doug Mendoza; John Lodderhose; Brian G. Gibson; Michael Grace; Nora C. Estopare; Rob G Daly; 'Tippett Mosby, Leanne (Leanne.TippettMosby@dnr.mo.gov)'; 'Aaron Schmidt'; 'Nagel, Chris (Christopher.Nagel@dnr.mo.gov)'; 'bpower@republicservices.com'; 'Getting, James'; 'Bouchard, Derek (DBouchard@republicservices.com)'; 'Kamp, Kevin'; 'LaFata, Natalie'; 'Cooper, Ivan (icooper@cecinc.com)'; 'lwright@cecinc.com'; Kelly Caddy; Dana B. Pasi; Christopher J. Bulmahn; Ken Gambaro; Mike Townley; 'lwright@cecinc.com'; Andrea A. Nord; Becca Coyle; 'koleary@cecinc.com'; 'sgraves@cecinc.com'; 'awyatt@herstassociates.com'
Subject: Bridgeton Landfill Weekly Report

The material for last week will be posted to Barr's ftp site by noon today.

- Under tab 013, a column has been added for potable water that is introduced to the lift station after the FIT 420 meter.
- The most recent radchem results are posted for 013 and 014.

The FTP site can be accessed as follows:

Copy this link and paste it into Windows Explorer (NOT Internet Explorer) ftp://ftp.barr.com/bridgetonlandfill/2015%20Reports/
User: blfdata
Password: tran$fer!

Ed Galbraith

Senior Environmental Consultant
Jefferson City office: 573.638.5024
cell: 573.418.5562
egalbraith@barr.com
www.barr.com

resourceful. naturally. BARR

DW

Doug Mendoza

From: Martin Blecha
Sent: Monday, October 19, 2015 7:34 AM
To: Martin Blecha; Mike Townley; Steve Grace; Brian G. Gibson; Doug Mendoza; Becca Coyle
Cc: John Lodderhose; Buffy Santel
Subject: Total Bridgeton Landfill leachate volume hauled to Bissell Point Treatment Plant from 10/11/2015 to 10/17/2015.

Total Bridgeton Landfill leachate volume hauled to Bissell Point Treatment Plant from 10/11/2015 to 10/17/2015.

10/11 – 0 gallons
10/12 – 0 gallons
10/13 – 142,500 gallons
10/14 – 142,500 gallons
10/15 – 142,500 gallons
10/16 – 0 gallons
10/17 – 0 gallons
Total = 427,500 gallons

Martin J. Blecha
Metropolitan St. Louis Sewer District
Environmental Engineering Associate
10 E. Grand Ave.
St. Louis, MO. 63147-2913.
Office Phone (314)-436-8716

Doug Mendoza Bridgeton Landfill

From: LaFata, Natalie <nlafata@cecinc.com>
Sent: Friday, October 16, 2015 11:35 AM
To: Rob G Daly; Mark Bright; Mike Waxman; Doug Mendoza; Jeff Jones; Kevin George
Cc: O'Leary, Kevin; Graves, Stephen; Kamp, Kevin; Kohrt, Mark; LaFata, Natalie
Subject: Plant Update 10-16-2015

The plant discharge is averaging 200+ GPM. The average amounts since the last Force Main/Plant Update:

Date	**Direct Discharge** (gallons)
10/1/2015	259,517
10/2/2015	183,961
10/3/2015	142,965
10/4/2015	139,365
10/5/2015	98,609
10/6/2015	130,087
10/7/2015	160,822
10/8/2015	245,052
10/9/2015	266,709
10/10/2015	275,678
10/11/2015	284,804
10/12/2015	268,696
10/13/2015	276,370
10/14/2015	264,557
10/15/2015	241,848

- On 10-15-2015, MSD performed maintenance/cleaning on Pump Station #1 on the force main. During that time, discharge from the treatment plant was stopped. Discharged was closed for less than 2 hours during the maintenance.
- There is a 1 million gallon aeration tank in the plant's process that is drained and maintenance is being performed on. This is not affecting the treatment plants production to the force main.
- Sodium Nitrate dosing is at 400gpd and Ferric Chloride is being introduced to the discharge manhole 013 at 0.6-1.5gph at this time.

Any questions, please feel free to contact me!

Have a great weekend!!

Natalie L. La Fata / Plant Manager
Civil & Environmental Consultants, Inc.
4848 Park 370 Blvd., Suite F · Hazelwood, MO 63042

Doug Mendoza

From: Ed Galbraith <EGalbraith@barr.com>
Sent: Thursday, October 15, 2015 3:58 PM
To: Doug Mendoza
Cc: 'Bouchard, Derek (DBouchard@republicservices.com)'; Kelly Caddy; Dana B. Pasi
Subject: RE: Bridgeton Landfill Monthly Report For October 2015

Doug, got the bench sheet and it looks like PDC did a number of dilutions but never got sufficient oxygen depletion in any of them for a reportable value. The least diluted was 1:375, which is how they got the <750 mg/l result.

Ed Galbraith

Senior Environmental Consultant
Jefferson City, MO office: 573.638.5024
cell: 573.418.5562
egalbraith@barr.com
www.barr.com

resourceful. naturally. BARR

From: Ed Galbraith
Sent: Thursday, October 15, 2015 2:21 PM
To: 'Doug Mendoza'
Cc: Bouchard, Derek (DBouchard@republicservices.com); Kelly Caddy; Dana B. Pasi
Subject: RE: Bridgeton Landfill Monthly Report For October 2015

Doug, the initial word that we got from PDC was that they set the dilutions based on a COD check of 6500 mg/l. We are requesting the bench sheet from them to see what dilutions they used.

Ed Galbraith

Senior Environmental Consultant
Jefferson City, MO office: 573.638.5024
cell: 573.418.5562
egalbraith@barr.com
www.barr.com

resourceful. naturally. BARR

From: Doug Mendoza [mailto:DMENDOZA@stlmsd.com]
Sent: Wednesday, October 14, 2015 8:35 AM
To: Ed Galbraith
Subject: RE: Bridgeton Landfill Monthly Report For October 2015

Doug Mendoza

From: Ed Galbraith <EGalbraith@barr.com>
Sent: Thursday, October 15, 2015 2:21 PM
To: Doug Mendoza
Cc: Bouchard, Derek (DBouchard@republicservices.com); Kelly Caddy; Dana B. Pasi
Subject: RE: Bridgeton Landfill Monthly Report For October 2015

Doug, the initial word that we got from PDC was that they set the dilutions based on a COD check of 6500 mg/l. We are requesting the bench sheet from them to see what dilutions they used.

Ed Galbraith

Senior Environmental Consultant
Jefferson City, MO office: 573.638.5024
cell: 573.418.5562
egalbraith@barr.com
www.barr.com

resourceful. naturally. BARR

From: Doug Mendoza [mailto:DMENDOZA@stlmsd.com]
Sent: Wednesday, October 14, 2015 8:35 AM
To: Ed Galbraith
Subject: RE: Bridgeton Landfill Monthly Report For October 2015

Please provide additional details on the non-detect reading for BOD. 750 mg/L is not a normal method detection limit for BOD.

From: Ed Galbraith [mailto:EGalbraith@barr.com]
Sent: Wednesday, October 14, 2015 8:34 AM
To: Doug Mendoza; John Lodderhose; Brian G. Gibson; Michael Grace; Nora C. Estopare; Rob G Daly; 'Tippett Mosby, Leanne (Leanne.TippettMosby@dnr.mo.gov)'; 'Aaron Schmidt'; 'Nagel, Chris (Christopher.Nagel@dnr.mo.gov)'; 'bpower@republicservices.com'; 'Getting, James'; 'Bouchard, Derek (DBouchard@republicservices.com)'; 'Kamp, Kevin'; 'LaFata, Natalie'; 'Cooper, Ivan (icooper@cecinc.com)'; 'lwright@cecinc.com'; Kelly Caddy; Dana B. Pasi; Christopher J. Bulmahn; Ken Gambaro; Mike Townley; 'lwright@cecinc.com'; Andrea A. Nord; Becca Coyle; 'koleary@cecinc.com'; 'sgraves@cecinc.com'; 'awyatt@herstassociates.com'
Subject: Bridgeton Landfill Monthly Report For October 2015

The material for last week will be posted to Barr's ftp site by noon today.

- Because of higher than normal reporting limits, the calculated value for total phenolics is 6 mg/l, higher than other recent samples. However the Method 420.1 result was within a normal range.
- SP014 sample T1-137-AS (10/05/2015) was non-detect BOD for at < 750 mg/l. Another sample is scheduled for October.

Doug Mendoza

From: Martin Blecha
Sent: Thursday, October 15, 2015 1:57 PM
To: Martin Blecha; Mike Townley; Steve Grace; Brian G. Gibson; Doug Mendoza; Becca Coyle
Cc: John Lodderhose; Buffy Santel
Subject: Total Bridgeton Landfill leachate volume hauled to Bissell Point Treatment Plant from 10/4/2015 to 10/10/2015.

Total Bridgeton Landfill leachate volume hauled to Bissell Point Treatment Plant from 10/4/2015 to 10/10/2015.

10/04 –330,000 gallons
10/05 –142,500 gallons
10/06 – 97,500 gallons
10/07 – 97,000 gallons
10/08 – 97,000 gallons
10/09 – 0 gallons
10/10 – 0 gallons
Total = 765,000 gallons

Martin J. Blecha
Metropolitan St. Louis Sewer District
Environmental Engineering Associate
10 E. Grand Ave.
St. Louis, MO. 63147-2913.
Office Phone (314)-436-8716

Doug Mendoza

From: Doug Mendoza
Sent: Thursday, October 15, 2015 1:38 PM
To: Brian G. Gibson
Cc: Stephen A. Bausano; Jay Hoskins
Subject: BRIDGETON LANDFILL LLC [1003803000] monitoring & addition of calcium
Attachments: BRIDGETON LANDFILL LLC - Calcium removal system.pdf

Brian,

As we discussed, I have added calcium as a pollutant to be monitored in Bridgeton Landfill's discharge. We had a problem with blockages in the force main from Bridgeton Landfill, and analysis of the gritty material removed from the force main/pump stations showed levels of calcium in the thousands of ppm. Bridgeton Landfill previously had extensive problems with scaling and build up in its internal piping and equipment. They installed a calcium removal system (water softener) at the top of their pretreatment system in August 2015, bringing calcium levels down from about 6,000 mg/L down to about 500 mg/L and finishing with a chemical inhibitor to prevent the remaining calcium from forming scale. (Per their June 2015 calcium removal system description pp. 5, 7, 9. See attached for details.)

However, the landfill had been discharging the high calcium wastewater since November 2014. So it was in our force main for roughly 9 months before calcium levels were reduced. We also do not have data showing the current calcium levels in the wastewater discharge.

In addition to sampling for calcium for future sampling events, please add calcium to the current planned sampling event – and collect that event's samples as soon as possible.

---Doug

Doug Mendoza

From: Doug Mendoza
Sent: Thursday, October 15, 2015 8:31 AM
To: 'Ed Galbraith'; John Lodderhose; Brian G. Gibson; Michael Grace; Nora C. Estopare; Rob G Daly; 'Tippett Mosby, Leanne (Leanne.TippettMosby@dnr.mo.gov)'; 'Aaron Schmidt'; 'Nagel, Chris (Christopher.Nagel@dnr.mo.gov)'; 'bpower@republicservices.com'; 'Getting, James'; 'Bouchard, Derek (DBouchard@republicservices.com)'; 'Kamp, Kevin'; 'LaFata, Natalie'; 'Cooper, Ivan (icooper@cecinc.com)'; 'lwright@cecinc.com'; Kelly Caddy; Dana B. Pasi; Christopher J. Bulmahn; Ken Gambaro; Mike Townley; 'lwright@cecinc.com'; Andrea A. Nord; Becca Coyle; 'koleary@cecinc.com'; 'sgraves@cecinc.com'; 'awyatt@herstassociates.com'
Subject: RE: Bridgeton Landfill Monthly Report For October 2015

Ed,

The spreadsheet that was uploaded on 10/14/15 does not include a column for the potable water introduced at SP013. Please have this added, with values from 8/24/2015 through the most recent entry. See the email excerpt below for additional information.

Thank you,
Doug Mendoza
MSD Industrial Pretreatment Manager

From: Doug Mendoza
Sent: Friday, October 02, 2015 8:56 AM
To: 'Graves, Stephen'; 'Ed Galbraith'
Cc: Kamp, Kevin; LaFata, Natalie; Bouchard, Derek (DBouchard@republicservices.com); Kelly Caddy
Subject: RE: Bridgeton Landfill flows

Steve,

Thank you for the additional information. Regarding item 5 below, the monthly volume reports will need to include separate columns for the metered leachate discharge and the potable water introduced at SP013. Since the potable water enters downstream from the leachate metering, and MSD does not bill for any of the incoming potable water, we will need to separately add any volume charge for this discharged potable water. However, it appears that the extra volume should be minimal going forward.

Doug Mendoza
MSD Industrial Pretreatment Manager

From: Graves, Stephen [mailto:sgraves@cecinc.com]
Sent: Thursday, October 01, 2015 2:55 PM
To: Doug Mendoza; 'Ed Galbraith'
Cc: Kamp, Kevin; LaFata, Natalie; Bouchard, Derek (DBouchard@republicservices.com); Kelly Caddy
Subject: RE: Bridgeton Landfill flows

5. Potable water is introduced to the sewer with the onsite discharge. Where specifically is this potable water added? And is it upstream of the FIT-420 meter? This is a critical issue since Bridgeton Landfill is billed based only on its discharge volume and not for any incoming raw water.

Until the shutdown which occurred on 8/24-25/2015, potable water was introduced into the system at the permeate holding tank located inside the pretreatment building and was discharged from there. The volume was estimated in the best way possible. Beginning on 8/24/2015 potable water has been introduced at MH-013 downstream of all wastewater discharge metering devices, from a new, separate, internally metered water hydrant located near Pump Station 1.

From: Ed Galbraith [mailto:EGalbraith@barr.com]
Sent: Wednesday, October 14, 2015 8:34 AM
To: Doug Mendoza; John Lodderhose; Brian G. Gibson; Michael Grace; Nora C. Estopare; Rob G Daly; 'Tippett Mosby, Leanne (Leanne.TippettMosby@dnr.mo.gov)'; 'Aaron Schmidt'; 'Nagel, Chris (Christopher.Nagel@dnr.mo.gov)'; 'bpower@republicservices.com'; 'Getting, James'; 'Bouchard, Derek (DBouchard@republicservices.com)'; 'Kamp, Kevin'; 'LaFata, Natalie'; 'Cooper, Ivan (icooper@cecinc.com)'; 'lwright@cecinc.com'; Kelly Caddy; Dana B. Pasi; Christopher J. Bulmahn; Ken Gambaro; Mike Townley; 'lwright@cecinc.com'; Andrea A. Nord; Becca Coyle; 'koleary@cecinc.com'; 'sgraves@cecinc.com'; 'awyatt@herstassociates.com'
Subject: Bridgeton Landfill Monthly Report For October 2015

The material for last week will be posted to Barr's ftp site by noon today.

- Because of higher than normal reporting limits, the calculated value for total phenolics is 6 mg/l, higher than other recent samples. However the Method 420.1 result was within a normal range.
- SP014 sample T1-137-AS (10/05/2015) was non-detect BOD for at < 750 mg/l. Another sample is scheduled for October.
- MH013 sample on 9/15/2015 was qualified for COD. Matrix spike recovery exceeded QC limits. However, the batch was accepted based on laboratory control sample (LCS) recovery. Another sample for MH013 was not collected in September.

The FTP site can be accessed as follows:

Copy this link and paste it into Windows Explorer (NOT Internet Explorer) ftp://ftp.barr.com/bridgetonlandfill/2015%20Reports/
User: blfdata
Password: tran$fer!

Ed Galbraith

Senior Environmental Consultant
Jefferson City office: 573.638.5024
cell: 573.418.5562
egalbraith@barr.com
www.barr.com

resourceful. naturally. BARR

Doug Mendoza

From: LaFata, Natalie <nlafata@cecinc.com>
Sent: Wednesday, October 14, 2015 3:36 PM
To: Doug Mendoza; Ed Galbraith
Cc: Graves, Stephen; bpower@republicservices.com; Kamp, Kevin
Subject: RE: Bridgeton Landfill Monthly Report For October 2015

Yes, Doug it could have. I was going off the old standard of 24 hrs after collection. I will have the lab on standby for if/when this type of situation arise again.

Natalie L. La Fata / Plant Manager
Civil & Environmental Consultants, Inc.
4848 Park 370 Blvd., Suite F · Hazelwood, MO 63042
Toll Free: (866) 250-3679 ext. 3626 · Fax: (314) 656-4595
Mobile: (314) 341-3375 · http://www.cecinc.com
Senior Leadership · Integrated Services · Personal Business Relationships

This electronic communication and any attachments are intended solely for the use of the person or entity to which it is addressed, and may contain information that is confidential, privileged and exempt from disclosure under applicable law, including copyright law. If you are not the intended recipient of this message, you are prohibited from disclosing, reproducing, distributing, disseminating or otherwise using this transmission. Please promptly notify the sender by reply electronic communication and immediately delete this message from your system.

From: Doug Mendoza [mailto:DMENDOZA@stlmsd.com]
Sent: Wednesday, October 14, 2015 2:40 PM
To: LaFata, Natalie; Ed Galbraith
Cc: Graves, Stephen; bpower@republicservices.com; Kamp, Kevin
Subject: RE: Bridgeton Landfill Monthly Report For October 2015

Contingencies with the lab then will be needed for those situations. However, with a 48 hour hold time for BOD, and longer for COD, it seems that a sample could have been collected Saturday and delivered to PDC on Monday morning, Oct. 5.

Doug

From: LaFata, Natalie [mailto:nlafata@cecinc.com]
Sent: Wednesday, October 14, 2015 1:13 PM
To: Doug Mendoza; Ed Galbraith
Cc: Graves, Stephen; bpower@republicservices.com; Kamp, Kevin
Subject: RE: Bridgeton Landfill Monthly Report For October 2015

Doug and Ed, the hauling did begin again on Oct 3rd, which was a Saturday. We did not collect a sample for the contracted lab (PDC) to pick up until Monday because they were not open for business. We do however, collect samples from the hauled material on a daily basis and analyze them in our lab onsite.

Natalie L. La Fata / Plant Manager
Civil & Environmental Consultants, Inc.
4848 Park 370 Blvd., Suite F · Hazelwood, MO 63042
Toll Free: (866) 250-3679 ext. 3626 · Fax: (314) 656-4595
Mobile: (314) 341-3375 · http://www.cecinc.com
Senior Leadership · Integrated Services · Personal Business Relationships

Doug Mendoza

From: Doug Mendoza
Sent: Wednesday, October 14, 2015 2:40 PM
To: 'LaFata, Natalie'; Ed Galbraith
Cc: Graves, Stephen; bpower@republicservices.com; Kamp, Kevin
Subject: RE: Bridgeton Landfill Monthly Report For October 2015

Contingencies with the lab then will be needed for those situations. However, with a 48 hour hold time for BOD, and longer for COD, it seems that a sample could have been collected Saturday and delivered to PDC on Monday morning, Oct. 5.

Doug

From: LaFata, Natalie [mailto:nlafata@cecinc.com]
Sent: Wednesday, October 14, 2015 1:13 PM
To: Doug Mendoza; Ed Galbraith
Cc: Graves, Stephen; bpower@republicservices.com; Kamp, Kevin
Subject: RE: Bridgeton Landfill Monthly Report For October 2015

Doug and Ed, the hauling did begin again on Oct 3rd, which was a Saturday. We did not collect a sample for the contracted lab (PDC) to pick up until Monday because they were not open for business. We do however, collect samples from the hauled material on a daily basis and analyze them in our lab onsite.

Natalie L. La Fata / Plant Manager
Civil & Environmental Consultants, Inc.
4848 Park 370 Blvd., Suite F · Hazelwood, MO 63042
Toll Free: (866) 250-3679 ext. 3626 · Fax: (314) 656-4595
Mobile: (314) 341-3375 · http://www.cecinc.com
Senior Leadership · Integrated Services · Personal Business Relationships

This electronic communication and any attachments are intended solely for the use of the person or entity to which it is addressed, and may contain information that is confidential, privileged and exempt from disclosure under applicable law, including copyright law. If you are not the intended recipient of this message, you are prohibited from disclosing, reproducing, distributing, disseminating or otherwise using this transmission. Please promptly notify the sender by reply electronic communication and immediately delete this message from your system.

From: Doug Mendoza [mailto:DMENDOZA@stlmsd.com]
Sent: Wednesday, October 14, 2015 1:07 PM
To: 'Ed Galbraith'; John Lodderhose; Brian G. Gibson; Michael Grace; Nora C. Estopare; Rob G Daly; 'Tippett Mosby, Leanne (Leanne.TippettMosby@dnr.mo.gov)'; 'Aaron Schmidt'; 'Nagel, Chris (Christopher.Nagel@dnr.mo.gov)'; 'bpower@republicservices.com'; 'Getting, James'; 'Bouchard, Derek (DBouchard@republicservices.com)'; Kamp, Kevin; LaFata, Natalie; Cooper, Ivan; Wright, Leon; Kelly Caddy; Dana B. Pasi; Christopher J. Bulmahn; Ken Gambaro; Mike Townley; Wright, Leon; Andrea A. Nord; Becca Coyle; O'Leary, Kevin; Graves, Stephen; 'awyatt@herstassociates.com'
Subject: RE: Bridgeton Landfill Monthly Report For October 2015

Ed & Bridgeton Landfill personnel,

Hauled leachate recommenced on 10/3/2015, and samples were collected 2x in the first week. However, the first sample was not collected until the 3rd day of hauling, 10/5/2015. For all future hauling episodes, a sample must be taken and analyzed starting with the first day of hauling.

Doug Mendoza
MSD Industrial Pretreatment Manager

Doug Mendoza

From: LaFata, Natalie <nlafata@cecinc.com>
Sent: Wednesday, October 14, 2015 1:13 PM
To: Doug Mendoza; Ed Galbraith
Cc: Graves, Stephen; bpower@republicservices.com; Kamp, Kevin
Subject: RE: Bridgeton Landfill Monthly Report For October 2015

Doug and Ed, the hauling did begin again on Oct 3rd, which was a Saturday. We did not collect a sample for the contracted lab (PDC) to pick up until Monday because they were not open for business. We do however, collect samples from the hauled material on a daily basis and analyze them in our lab onsite.

Natalie L. La Fata / Plant Manager
Civil & Environmental Consultants, Inc.
4848 Park 370 Blvd., Suite F · Hazelwood, MO 63042
Toll Free: (866) 250-3679 ext. 3626 · Fax: (314) 656-4595
Mobile: (314) 341-3375 · http://www.cecinc.com
Senior Leadership · Integrated Services · Personal Business Relationships

This electronic communication and any attachments are intended solely for the use of the person or entity to which it is addressed, and may contain information that is confidential, privileged and exempt from disclosure under applicable law, including copyright law. If you are not the intended recipient of this message, you are prohibited from disclosing, reproducing, distributing, disseminating or otherwise using this transmission. Please promptly notify the sender by reply electronic communication and immediately delete this message from your system.

From: Doug Mendoza [mailto:DMENDOZA@stlmsd.com]
Sent: Wednesday, October 14, 2015 1:07 PM
To: 'Ed Galbraith'; John Lodderhose; Brian G. Gibson; Michael Grace; Nora C. Estopare; Rob G Daly; 'Tippett Mosby, Leanne (Leanne.TippettMosby@dnr.mo.gov)'; 'Aaron Schmidt'; 'Nagel, Chris (Christopher.Nagel@dnr.mo.gov)'; 'bpower@republicservices.com'; 'Getting, James'; 'Bouchard, Derek (DBouchard@republicservices.com)'; Kamp, Kevin; LaFata, Natalie; Cooper, Ivan; Wright, Leon; Kelly Caddy; Dana B. Pasi; Christopher J. Bulmahn; Ken Gambaro; Mike Townley; Wright, Leon; Andrea A. Nord; Becca Coyle; O'Leary, Kevin; Graves, Stephen; 'awyatt@herstassociates.com'
Subject: RE: Bridgeton Landfill Monthly Report For October 2015

Ed & Bridgeton Landfill personnel,

Hauled leachate recommenced on 10/3/2015, and samples were collected 2x in the first week. However, the first sample was not collected until the 3rd day of hauling, 10/5/2015. For all future hauling episodes, a sample must be taken and analyzed starting with the first day of hauling.

Doug Mendoza
MSD Industrial Pretreatment Manager

From: Ed Galbraith [mailto:EGalbraith@barr.com]
Sent: Wednesday, October 14, 2015 8:34 AM
To: Doug Mendoza; John Lodderhose; Brian G. Gibson; Michael Grace; Nora C. Estopare; Rob G Daly; 'Tippett Mosby, Leanne (Leanne.TippettMosby@dnr.mo.gov)'; 'Aaron Schmidt'; 'Nagel, Chris (Christopher.Nagel@dnr.mo.gov)'; 'bpower@republicservices.com'; 'Getting, James'; 'Bouchard, Derek (DBouchard@republicservices.com)'; 'Kamp, Kevin'; 'LaFata, Natalie'; 'Cooper, Ivan (icooper@cecinc.com)'; 'lwright@cecinc.com'; Kelly Caddy; Dana B. Pasi; Christopher J. Bulmahn; Ken Gambaro; Mike Townley; 'lwright@cecinc.com'; Andrea A. Nord; Becca Coyle; 'koleary@cecinc.com'; 'sgraves@cecinc.com'; 'awyatt@herstassociates.com'
Subject: Bridgeton Landfill Monthly Report For October 2015

The material for last week will be posted to Barr's ftp site by noon today.

Doug Mendoza

From: Doug Mendoza
Sent: Wednesday, October 14, 2015 1:07 PM
To: 'Ed Galbraith'; John Lodderhose; Brian G. Gibson; Michael Grace; Nora C. Estopare; Rob G Daly; 'Tippett Mosby, Leanne (Leanne.TippettMosby@dnr.mo.gov)'; 'Aaron Schmidt'; 'Nagel, Chris (Christopher.Nagel@dnr.mo.gov)'; 'bpower@republicservices.com'; 'Getting, James'; 'Bouchard, Derek (DBouchard@republicservices.com)'; 'Kamp, Kevin'; 'LaFata, Natalie'; 'Cooper, Ivan (icooper@cecinc.com)'; 'lwright@cecinc.com'; Kelly Caddy; Dana B. Pasi; Christopher J. Bulmahn; Ken Gambaro; Mike Townley; 'lwright@cecinc.com'; Andrea A. Nord; Becca Coyle; 'koleary@cecinc.com'; 'sgraves@cecinc.com'; 'awyatt@herstassociates.com'
Subject: RE: Bridgeton Landfill Monthly Report For October 2015

Ed & Bridgeton Landfill personnel,

Hauled leachate recommenced on 10/3/2015, and samples were collected 2x in the first week. However, the first sample was not collected until the 3rd day of hauling, 10/5/2015. For all future hauling episodes, a sample must be taken and analyzed starting with the first day of hauling.

Doug Mendoza
MSD Industrial Pretreatment Manager

From: Ed Galbraith [mailto:EGalbraith@barr.com]
Sent: Wednesday, October 14, 2015 8:34 AM
To: Doug Mendoza; John Lodderhose; Brian G. Gibson; Michael Grace; Nora C. Estopare; Rob G Daly; 'Tippett Mosby, Leanne (Leanne.TippettMosby@dnr.mo.gov)'; 'Aaron Schmidt'; 'Nagel, Chris (Christopher.Nagel@dnr.mo.gov)'; 'bpower@republicservices.com'; 'Getting, James'; 'Bouchard, Derek (DBouchard@republicservices.com)'; 'Kamp, Kevin'; 'LaFata, Natalie'; 'Cooper, Ivan (icooper@cecinc.com)'; 'lwright@cecinc.com'; Kelly Caddy; Dana B. Pasi; Christopher J. Bulmahn; Ken Gambaro; Mike Townley; 'lwright@cecinc.com'; Andrea A. Nord; Becca Coyle; 'koleary@cecinc.com'; 'sgraves@cecinc.com'; 'awyatt@herstassociates.com'
Subject: Bridgeton Landfill Monthly Report For October 2015

The material for last week will be posted to Barr's ftp site by noon today.

- Because of higher than normal reporting limits, the calculated value for total phenolics is 6 mg/l, higher than other recent samples. However the Method 420.1 result was within a normal range.
- SP014 sample T1-137-AS (10/05/2015) was non-detect BOD for at < 750 mg/l. Another sample is scheduled for October.
- MH013 sample on 9/15/2015 was qualified for COD. Matrix spike recovery exceeded QC limits. However, the batch was accepted based on laboratory control sample (LCS) recovery. Another sample for MH013 was not collected in September.

The FTP site can be accessed as follows:

Copy this link and paste it into Windows Explorer (NOT Internet Explorer) ftp://ftp.barr.com/bridgetonlandfill/2015%20Reports/
User: blfdata
Password: tran$fer!

Ed Galbraith

Doug Mendoza

From: Doug Mendoza
Sent: Wednesday, October 14, 2015 8:35 AM
To: 'Ed Galbraith'
Subject: RE: Bridgeton Landfill Monthly Report For October 2015

Please provide additional details on the non-detect reading for BOD. 750 mg/L is not a normal method detection limit for BOD.

From: Ed Galbraith [mailto:EGalbraith@barr.com]
Sent: Wednesday, October 14, 2015 8:34 AM
To: Doug Mendoza; John Lodderhose; Brian G. Gibson; Michael Grace; Nora C. Estopare; Rob G Daly; 'Tippett Mosby, Leanne (Leanne.TippettMosby@dnr.mo.gov)'; 'Aaron Schmidt'; 'Nagel, Chris (Christopher.Nagel@dnr.mo.gov)'; 'bpower@republicservices.com'; 'Getting, James'; 'Bouchard, Derek (DBouchard@republicservices.com)'; 'Kamp, Kevin'; 'LaFata, Natalie'; 'Cooper, Ivan (icooper@cecinc.com)'; 'lwright@cecinc.com'; Kelly Caddy; Dana B. Pasi; Christopher J. Bulmahn; Ken Gambaro; Mike Townley; 'lwright@cecinc.com'; Andrea A. Nord; Becca Coyle; 'koleary@cecinc.com'; 'sgraves@cecinc.com'; 'awyatt@herstassociates.com'
Subject: Bridgeton Landfill Monthly Report For October 2015

The material for last week will be posted to Barr's ftp site by noon today.

- Because of higher than normal reporting limits, the calculated value for total phenolics is 6 mg/l, higher than other recent samples. However the Method 420.1 result was within a normal range.
- SP014 sample T1-137-AS (10/05/2015) was non-detect BOD for at < 750 mg/l. Another sample is scheduled for October.
- MH013 sample on 9/15/2015 was qualified for COD. Matrix spike recovery exceeded QC limits. However, the batch was accepted based on laboratory control sample (LCS) recovery. Another sample for MH013 was not collected in September.

The FTP site can be accessed as follows:

Copy this link and paste it into Windows Explorer (NOT Internet Explorer) ftp://ftp.barr.com/bridgetonlandfill/2015%20Reports/
User: blfdata
Password: tran$fer!

Ed Galbraith

Senior Environmental Consultant
Jefferson City office: 573.638.5024
cell: 573.418.5562
egalbraith@barr.com
www.barr.com

resourceful. naturally. BARR

Doug Mendoza

From: Ed Galbraith <EGalbraith@barr.com>
Sent: Wednesday, October 14, 2015 8:34 AM
To: Doug Mendoza; John Lodderhose; Brian G. Gibson; Michael Grace; Nora C. Estopare; Rob G Daly; 'Tippett Mosby, Leanne (Leanne.TippettMosby@dnr.mo.gov)'; 'Aaron Schmidt'; 'Nagel, Chris (Christopher.Nagel@dnr.mo.gov)'; 'bpower@republicservices.com'; 'Getting, James'; 'Bouchard, Derek (DBouchard@republicservices.com)'; 'Kamp, Kevin'; 'LaFata, Natalie'; 'Cooper, Ivan (icooper@cecinc.com)'; 'lwright@cecinc.com'; Kelly Caddy; Dana B. Pasi; Christopher J. Bulmahn; Ken Gambaro; Mike Townley; 'lwright@cecinc.com'; Andrea A. Nord; Becca Coyle; 'koleary@cecinc.com'; 'sgraves@cecinc.com'; 'awyatt@herstassociates.com'
Subject: Bridgeton Landfill Monthly Report For October 2015

CB 10-15

The material for last week will be posted to Barr's ftp site by noon today.

- Because of higher than normal reporting limits, the calculated value for total phenolics is 6 mg/l, higher than other recent samples. However the Method 420.1 result was within a normal range.
- SP014 sample T1-137-AS (10/05/2015) was non-detect BOD for at < 750 mg/l. Another sample is scheduled for October.
- MH013 sample on 9/15/2015 was qualified for COD. Matrix spike recovery exceeded QC limits. However, the batch was accepted based on laboratory control sample (LCS) recovery. Another sample for MH013 was not collected in September.

The FTP site can be accessed as follows:

Copy this link and paste it into Windows Explorer (NOT Internet Explorer) ftp://ftp.barr.com/bridgetonlandfill/2015%20Reports/
User: blfdata
Password: tran$fer!

Ed Galbraith

Senior Environmental Consultant
Jefferson City office: 573.638.5024
cell: 573.418.5562
egalbraith@barr.com
www.barr.com

resourceful. naturally. BARR

Hauled Waste Volume Summary				
Date	Batch I.D.	No. Of Trucks Hauled	Batch Volume (gal)	Daily Volume (gal)
10/12/2015	HW	2	15,000	135,000
	HW	16	120,000	
10/8/2015	T1-138-AS	5	37,500	97,500
	HW	8	60,000	
10/7/2015	HW	5	37,500	97,500
	HW	8	60,000	
10/6/2015	HW	5	37,500	97,500
	T1-137-AS	8	60,000	
10/5/2015	T1-137-AS	12	90,000	142,500
	HW	7	52,500	
10/4/2015	HW	19	142,500	330,000
	HW	25	187,500	
10/3/2015	HW	16	120,000	330,000
	HW	28	210,000	

Table 1

					Parameter	Biochemical Oxygen Demand (5-day)	Chemical Oxygen Demand	Cyanide	Nitrogen, ammonia as N	Oil and Grease	pH
					Total or Dissolved	NA	NA	NA	NA	NA	NA
Location	Date	Sample Collection Time	Lab Name	Data Status	Lab Report	mg/l	mg/l	mg/l	mg/l	mg/l	pH units
HW	10/12/2015		Field	No QC	WASTE_2015	--	2010	--	--	--	8.03
T1-138-AS	10/08/2015		Field	No QC	WASTE_2015	--	2320	--	--	--	8.14
HW	10/07/2015		Field	No QC	WASTE_2015	--	2210	--	--	--	8.03
HW	10/06/2015		Field	No QC	WASTE_2015	--	3510	--	--	--	8.07
T1-137-AS	10/05/2015	5:00 AM	PDC	Validated	5100354	ND	6200	--	--	--	--
T1-137-AS	10/05/2015		Field	No QC	WASTE_2015		1970	--	--	--	8.51
HW	10/04/2015		Field	No QC	WASTE_2015	--	2430	--	--	--	8.05
HW	10/03/2015		Field	No QC	WASTE_2015	--	2460	--	--	--	5.52

<750

MSD 033339

Table 1

					Parameter	Phenolics	Solids, total suspended	Temperature, °C	Total Toxic Organics	Ultraviolet absorbance at 254 nm	Antimony	Arsenic
					Total or Dissolved	NA	NA	NA	NA	NA	Total	Total
Location	Date	Sample Collection Time	Lab Name	Data Status	Lab Report	mg/l	mg/l	deg C	ug/l	cm-1	mg/l	mg/l
HW	10/12/2015		Field	No QC	WASTE_2015	--	18080	35.6	--	--	--	--
T1-138-AS	10/08/2015		Field	No QC	WASTE_2015	--	18900	34.2	--	--	--	--
HW	10/07/2015		Field	No QC	WASTE_2015	--	19980	33.6	--	--	--	--
HW	10/06/2015		Field	No QC	WASTE_2015	--	19260	31.4	--	--	--	--
T1-137-AS	10/05/2015	5:00 AM	PDC	Validated	5100354	--	14000	--	--	--	--	--
T1-137-AS	10/05/2015		Field	No QC	WASTE_2015	--	15580	29.8	--	--	--	--
HW	10/04/2015		Field	No QC	WASTE_2015	--	11740	24.2	--	--	--	--
HW	10/03/2015		Field	No QC	WASTE_2015	--	10860	33.4	--	--	--	--

MSD 033340

Table 1
LPTP Discharge Samples
Bridgeton Landfill

						Parameter	Biochemical Oxygen Demand (5-day)	Chemical Oxygen Demand	Cyanide	Nitrate	Nitrite	Nitrogen, ammonia as N
						Total or Dissolved	NA	NA	NA	NA	NA	NA
						Permit Limitation/Surcharge Threshold	300 mg/l	600 mg/l				
Location	Date	Start Composite	End Composite	Lab Name	Data Status	Lab Report	mg/l	mg/l	mg/l	mg/l	mg/l	mg/l
MH013	9/15/2015	1:30 PM	9:00 PM	Pace	Validated	60202880	--	--	--	--	--	--
MH013	9/15/2015	1:30 PM	9:00 PM	Pace	Validated	60202880	--	--	--	--	--	--
MH013	9/15/2015	1:30 PM	9:00 PM	Pace	Validated	60202895	184	3160 *	0.059	--	--	262
LPTP Permeate	9/15/2015			LPTP	No QC	LPTP	--	3530	--	--	--	--
MH013	9/15/2015			LPTP	No QC	LPTP	--	3670	--	--	--	--

* Matrix spike recovery exceeded QC limits.

MSD 033341

Table 1
LPTP Discharge Samples
Bridgeton Landfill

						Parameter	Oil and Grease	Orthophosphate, as P	Permeate Produced	pH	pH	Phosphorus, total, as P
						Total or Dissolved	NA	NA	NA	NA	NA	NA
						Permit Limitation/Surcharge Threshold	200 mg/l			5.5 - 11.5 pH units	5.5 - 11.5 pH units	
Location	Date	Start Composite	End Composite	Lab Name	Data Status	Lab Report	mg/l	mg/l	gal	pH units	pH units	mg/l
MH013	9/15/2015	1:30 PM	9:00 PM	Pace	Validated	60202880	--	--	--	--	--	--
MH013	9/15/2015	1:30 PM	9:00 PM	Pace	Validated	60202880	--	--	--	--	--	--
MH013	9/15/2015	1:30 PM	9:00 PM	Pace	Validated	60202895	11.7	--	--	7.9	--	--
LPTP Permeate	9/15/2015			LPTP	No QC	LPTP	--	0.83	319346	--	7.46	1.8
MH013	9/15/2015			LPTP	No QC	LPTP	--	1.51	--	--	7.62	1.77

MSD 033342

Table 1
LPTP Discharge Samples
Bridgeton Landfill

						Parameter	Solids, total suspended	Metered Discharge	FIT-420 Flow	Conversion Factor	Calculated Discharge	Total Phenolics by Method 420.1
						Total or Dissolved	NA	NA	NA	NA	NA	NA
						Permit Limitation/Surcharge Threshold	300 mg/l					21 mg/l
Location	Date	Start Composite	End Composite	Lab Name	Data Status	Lab Report	mg/l	gal	gal		gal	mg/l
MH013	9/15/2015	1:30 PM	9:00 PM	Pace	Validated	60202880	--	--	--	--	--	--
MH013	9/15/2015	1:30 PM	9:00 PM	Pace	Validated	60202880	--	--	--	--	--	--
MH013	9/15/2015	1:30 PM	9:00 PM	Pace	Validated	60202895	28.0	--	--	--	--	0.79
LPTP Permeate	9/15/2015			LPTP	No QC	LPTP	11	--	--	--	--	--
MH013	9/15/2015			LPTP	No QC	LPTP	48	--	250006	0.92	271746	--

MSD 033343

Table 1
LPTP Discharge Samples
Bridgeton Landfill

						Parameter	Total Phenolics by Method 625	Total Toxic Organics	Ultraviolet absorbance at 254 nm	Antimony	Arsenic	Beryllium
						Total or Dissolved	NA	NA	NA	Total	Total	Total
						Permit Limitation/Surcharge Threshold	21 mg/l	5844 ug/l			770 ug/l	
Location	Date	Start Composite	End Composite	Lab Name	Data Status	Lab Report	mg/l	ug/l	cm-1	ug/l	ug/l	ug/l
MH013	9/15/2015	1:30 PM	9:00 PM	Pace	Validated	60202880	--	--	0.26	--	--	--
MH013	9/15/2015	1:30 PM	9:00 PM	Pace	Validated	60202880	--	--	0.26	--	--	--
MH013	9/15/2015	1:30 PM	9:00 PM	Pace	Validated	60202895	6	1130	--	10.0	345	~~ND~~ <1.0
LPTP Permeate	9/15/2015			LPTP	No QC	LPTP	--	--	--	--	--	--
MH013	9/15/2015			LPTP	No QC	LPTP	--	--	--	--	--	--

greater than

Method 420.1

Results,

Enter all -

// individual

phenolics.

CB

0.26 Absorbance → 54.954 % Transmittance

CB

MSD 033344

Table 1
LPTP Discharge Samples
Bridgeton Landfill

						Parameter	Cadmium	Chromium	Copper	Iron	Lead	Magnesium
						Total or Dissolved	Total	Total	Total	Total	Total	Total
						Permit Limitation/Surcharge Threshold	700 ug/l	5000 ug/l	2700 ug/l	150000 ug/l	400 ug/l	
Location	Date	Start Composite	End Composite	Lab Name	Data Status	Lab Report	ug/l	ug/l	ug/l	ug/l	ug/l	ug/l
MH013	9/15/2015	1:30 PM	9:00 PM	Pace	Validated	60202880	--	--	--	--	--	--
MH013	9/15/2015	1:30 PM	9:00 PM	Pace	Validated	60202880	--	--	--	--	--	--
MH013	9/15/2015	1:30 PM	9:00 PM	Pace	Validated	60202895	ND < 5	20.9	ND < 10	3520	ND < 5	116000
LPTP Permeate	9/15/2015			LPTP	No QC	LPTP	--	--	--	--	--	--
MH013	9/15/2015			LPTP	No QC	LPTP	--	--	--	--	--	--

MSD 033345

Table 1
LPTP Discharge Samples
Bridgeton Landfill

						Parameter	Mercury	Nickel	Selenium	Silver	Thallium	Zinc
						Total or Dissolved	Total	Total	Total	Total	Total	Total
						Permit Limitation/Surcharge Threshold	10 ug/l	2300 ug/l		500 ug/l		3000 ug/l
Location	Date	Start Composite	End Composite	Lab Name	Data Status	Lab Report	ug/l	ug/l	ug/l	ug/l	ug/l	ug/l
MH013	9/15/2015	1:30 PM	9:00 PM	Pace	Validated	60202880	--	--	--	--	--	--
MH013	9/15/2015	1:30 PM	9:00 PM	Pace	Validated	60202880	--	--	--	--	--	--
MH013	9/15/2015	1:30 PM	9:00 PM	Pace	Validated	60202895	~~ND~~ <0.2	25.6	~~ND~~ <15	~~ND~~ <7	~~ND~~ <20	~~ND~~ <50
LPTP Permeate	9/15/2015			LPTP	No QC	LPTP	--	--	--	--	--	--
MH013	9/15/2015			LPTP	No QC	LPTP	--	--	--	--	--	--

MSD 033346

Table 1
LPTP Discharge Samples
Bridgeton Landfill

						Parameter	1,2,4-Trichlorobenzene	2,4,6-Trichlorophenol	2,4-Dichlorophenol	2,4-Dimethylphenol	2,4-Dinitrophenol	2,4-Dinitrotoluene
						Total or Dissolved	NA	NA	NA	NA	NA	NA
						Permit Limitation/Surcharge Threshold						
Location	Date	Start Composite	End Composite	Lab Name	Data Status	Lab Report	ug/l	ug/l	ug/l	ug/l	ug/l	ug/l
MH013	9/15/2015	1:30 PM	9:00 PM	Pace	Validated	60202880	--	--	--	--	--	--
MH013	9/15/2015	1:30 PM	9:00 PM	Pace	Validated	60202880	--	--	--	--	--	--
MH013	9/15/2015	1:30 PM	9:00 PM	Pace	Validated	60202895	< ~~ND~~ 250	~~ND~~ < 250	~~ND~~ < 250	~~ND~~ < 250	~~ND~~ < 2500	ND
LPTP Permeate	9/15/2015			LPTP	No QC	LPTP	--	--	--	--	--	--
MH013	9/15/2015			LPTP	No QC	LPTP	--	--	--	--	--	--

MSD 033347

Table 1
LPTP Discharge Samples
Bridgeton Landfill

						Parameter	2,6-Dinitrotoluene	2-Chloronaphthalene	2-Chlorophenol	2-Methyl-4,6-dinitrophenol	2-Nitrophenol	3,3'-Dichlorobenzidine
						Total or Dissolved	NA	NA	NA	NA	NA	NA
						Permit Limitation/Surcharge Threshold						
Location	Date	Start Composite	End Composite	Lab Name	Data Status	Lab Report	ug/l	ug/l	ug/l	ug/l	ug/l	ug/l
MH013	9/15/2015	1:30 PM	9:00 PM	Pace	Validated	60202880	--	--	--	--	--	--
MH013	9/15/2015	1:30 PM	9:00 PM	Pace	Validated	60202880	--	--	--	--	--	--
MH013	9/15/2015	1:30 PM	9:00 PM	Pace	Validated	60202895	ND	ND	~~ND~~ <250	~~ND~~ <1250	~~ND~~ <250	ND
LPTP Permeate	9/15/2015			LPTP	No QC	LPTP	--	--	--	--	--	--
MH013	9/15/2015			LPTP	No QC	LPTP	--	--	--	--	--	--

MSD 033348

Table 1
LPTP Discharge Samples
Bridgeton Landfill

						Parameter	4-Bromophenyl phenyl ether	4-Chloro-3-methylphenol	4-Chlorophenyl phenyl ether	4-Nitrophenol	Acenaphthene	Acenaphthylene
						Total or Dissolved	NA	NA	NA	NA	NA	NA
						Permit Limitation/Surcharge Threshold						
Location	Date	Start Composite	End Composite	Lab Name	Data Status	Lab Report	ug/l	ug/l	ug/l	ug/l	ug/l	ug/l
MH013	9/15/2015	1:30 PM	9:00 PM	Pace	Validated	60202880	--	--	--	--	--	--
MH013	9/15/2015	1:30 PM	9:00 PM	Pace	Validated	60202880	--	--	--	--	--	--
MH013	9/15/2015	1:30 PM	9:00 PM	Pace	Validated	60202895	ND	~~ND~~ <250	ND	~~ND~~ <250	ND	ND
LPTP Permeate	9/15/2015			LPTP	No QC	LPTP	--	--	--	--	--	--
MH013	9/15/2015			LPTP	No QC	LPTP	--	--	--	--	--	--

MSD 033349

Table 1
LPTP Discharge Samples
Bridgeton Landfill

						Parameter	Anthracene	Benz(a)anthracene	Benzidine	Benzo(a)pyrene	Benzo(b)fluoranthene	Benzo(g,h,i)perylene
						Total or Dissolved	NA	NA	NA	NA	NA	NA
						Permit Limitation/Surcharge Threshold						
Location	Date	Start Composite	End Composite	Lab Name	Data Status	Lab Report	ug/l	ug/l	ug/l	ug/l	ug/l	ug/l
MH013	9/15/2015	1:30 PM	9:00 PM	Pace	Validated	60202880	--	--	--	--	--	--
MH013	9/15/2015	1:30 PM	9:00 PM	Pace	Validated	60202880	--	--	--	--	--	--
MH013	9/15/2015	1:30 PM	9:00 PM	Pace	Validated	60202895	ND	ND	ND	ND	ND	ND
LPTP Permeate	9/15/2015			LPTP	No QC	LPTP	--	--	--	--	--	--
MH013	9/15/2015			LPTP	No QC	LPTP	--	--	--	--	--	--

MSD 033350

Table 1
LPTP Discharge Samples
Bridgeton Landfill

						Parameter	Benzo(k)fluoranthene	Bis(2-chloroethoxy)methane	Bis(2-chloroethyl)ether	Bis(2-chloroisopropyl)ether	Bis(2-ethylhexyl)phthalate	Butyl benzyl phthalate[1]
						Total or Dissolved	NA	NA	NA	NA	NA	NA
						Permit Limitation/Surcharge Threshold						
Location	Date	Start Composite	End Composite	Lab Name	Data Status	Lab Report	ug/l	ug/l	ug/l	ug/l	ug/l	ug/l
MH013	9/15/2015	1:30 PM	9:00 PM	Pace	Validated	60202880	--	--	--	--	--	--
MH013	9/15/2015	1:30 PM	9:00 PM	Pace	Validated	60202880	--	--	--	--	--	--
MH013	9/15/2015	1:30 PM	9:00 PM	Pace	Validated	60202895	ND	ND	ND	ND	ND	ND
LPTP Permeate	9/15/2015			LPTP	No QC	LPTP	--	--	--	--	--	--
MH013	9/15/2015			LPTP	No QC	LPTP	--	--	--	--	--	--

MSD 033351

Table 1
LPTP Discharge Samples
Bridgeton Landfill

						Parameter	Chrysene	Dibenz(a,h)anthracene	Diethyl phthalate	Dimethyl phthalate	Di-n-butyl phthalate	Di-n-octyl phthalate
						Total or Dissolved	NA	NA	NA	NA	NA	NA
						Permit Limitation/Surcharge Threshold						
Location	Date	Start Composite	End Composite	Lab Name	Data Status	Lab Report	ug/l	ug/l	ug/l	ug/l	ug/l	ug/l
MH013	9/15/2015	1:30 PM	9:00 PM	Pace	Validated	60202880	--	--	--	--	--	--
MH013	9/15/2015	1:30 PM	9:00 PM	Pace	Validated	60202880	--	--	--	--	--	--
MH013	9/15/2015	1:30 PM	9:00 PM	Pace	Validated	60202895	ND	ND	ND	ND	ND	ND
LPTP Permeate	9/15/2015			LPTP	No QC	LPTP	--	--	--	--	--	--
MH013	9/15/2015			LPTP	No QC	LPTP	--	--	--	--	--	--

MSD 033352

Table 1
LPTP Discharge Samples
Bridgeton Landfill

						Parameter	Fluoranthene	Fluorene	Hexachlorobenzene	Hexachlorobutadiene	Hexachlorocyclopentadiene	Hexachloroethane
						Total or Dissolved	NA	NA	NA	NA	NA	NA
						Permit Limitation/Surcharge Threshold						
Location	Date	Start Composite	End Composite	Lab Name	Data Status	Lab Report	ug/l	ug/l	ug/l	ug/l	ug/l	ug/l
MH013	9/15/2015	1:30 PM	9:00 PM	Pace	Validated	60202880	--	--	--	--	--	--
MH013	9/15/2015	1:30 PM	9:00 PM	Pace	Validated	60202880	--	--	--	--	--	--
MH013	9/15/2015	1:30 PM	9:00 PM	Pace	Validated	60202895	ND	ND	ND	~~ND~~ <250	ND	ND
LPTP Permeate	9/15/2015			LPTP	No QC	LPTP	--	--	--	--	--	--
MH013	9/15/2015			LPTP	No QC	LPTP	--	--	--	--	--	--

MSD 033353

Table 1
LPTP Discharge Samples
Bridgeton Landfill

						Parameter	Indeno(1,2,3-cd)pyrene	Isophorone	Naphthalene	Nitrobenzene	N-Nitrosodimethylamine	N-Nitrosodi-n-propylamine
						Total or Dissolved	NA	NA	NA	NA	NA	NA
						Permit Limitation/Surcharge Threshold						
Location	Date	Start Composite	End Composite	Lab Name	Data Status	Lab Report	ug/l	ug/l	ug/l	ug/l	ug/l	ug/l
MH013	9/15/2015	1:30 PM	9:00 PM	Pace	Validated	60202880	--	--	--	--	--	--
MH013	9/15/2015	1:30 PM	9:00 PM	Pace	Validated	60202880	--	--	--	--	--	--
MH013	9/15/2015	1:30 PM	9:00 PM	Pace	Validated	60202895	ND	ND	~~ND~~ <250	ND	ND	ND
LPTP Permeate	9/15/2015			LPTP	No QC	LPTP	--	--	--	--	--	--
MH013	9/15/2015			LPTP	No QC	LPTP	--	--	--	--	--	--

MSD 033354

Table 1
LPTP Discharge Samples
Bridgeton Landfill

						Parameter	N-Nitrosodiphenylamine	Pentachlorophenol	Phenanthrene	Phenol	Pyrene	1,1,1-Trichloroethane
						Total or Dissolved	NA	NA	NA	NA	NA	NA
						Permit Limitation/Surcharge Threshold						
Location	Date	Start Composite	End Composite	Lab Name	Data Status	Lab Report	ug/l	ug/l	ug/l	ug/l	ug/l	ug/l
MH013	9/15/2015	1:30 PM	9:00 PM	Pace	Validated	60202880	--	--	--	--	--	--
MH013	9/15/2015	1:30 PM	9:00 PM	Pace	Validated	60202880	--	--	--	--	--	--
MH013	9/15/2015	1:30 PM	9:00 PM	Pace	Validated	60202895	ND	~~ND~~ <250	ND	~~ND~~ <250	ND	ND
LPTP Permeate	9/15/2015			LPTP	No QC	LPTP	--	--	--	--	--	--
MH013	9/15/2015			LPTP	No QC	LPTP	--	--	--	--	--	--

MSD 033355

Table 1
LPTP Discharge Samples
Bridgeton Landfill

						Parameter	1,1,2,2-Tetrachloroethane	1,1,2-Trichloroethane	1,1-Dichloroethane	1,1-Dichloroethylene	1,2-Dichlorobenzene	1,2-Dichloroethane
						Total or Dissolved	NA	NA	NA	NA	NA	NA
						Permit Limitation/Surcharge Threshold						
Location	Date	Start Composite	End Composite	Lab Name	Data Status	Lab Report	ug/l	ug/l	ug/l	ug/l	ug/l	ug/l
MH013	9/15/2015	1:30 PM	9:00 PM	Pace	Validated	60202880	--	--	--	--	--	--
MH013	9/15/2015	1:30 PM	9:00 PM	Pace	Validated	60202880	--	--	--	--	--	--
MH013	9/15/2015	1:30 PM	9:00 PM	Pace	Validated	60202895	~~ND~~ <10	ND	ND	ND	~~ND~~ <10	ND
LPTP Permeate	9/15/2015			LPTP	No QC	LPTP	--	--	--	--	--	--
MH013	9/15/2015			LPTP	No QC	LPTP	--	--	--	--	--	--

MSD 033356

Table 1
LPTP Discharge Samples
Bridgeton Landfill

						Parameter	1,2-Dichloroethylene, cis	1,2-Dichloroethylene, trans	1,2-Dichloropropane	1,3-Dichloro-1-propene, cis	1,3-Dichloro-1-propene, trans	1,3-Dichlorobenzene
						Total or Dissolved	NA	NA	NA	NA	NA	NA
						Permit Limitation/Surcharge Threshold						
Location	Date	Start Composite	End Composite	Lab Name	Data Status	Lab Report	ug/l	ug/l	ug/l	ug/l	ug/l	ug/l
MH013	9/15/2015	1:30 PM	9:00 PM	Pace	Validated	60202880	--	--	--	--	--	--
MH013	9/15/2015	1:30 PM	9:00 PM	Pace	Validated	60202880	--	--	--	--	--	--
MH013	9/15/2015	1:30 PM	9:00 PM	Pace	Validated	60202895	ND	ND	ND	ND	ND	ND
LPTP Permeate	9/15/2015			LPTP	No QC	LPTP	--	--	--	--	--	--
MH013	9/15/2015			LPTP	No QC	LPTP	--	--	--	--	--	--

MSD 033357

Table 1
LPTP Discharge Samples
Bridgeton Landfill

						Parameter	1,4-Dichlorobenzene	2-Chloroethyl vinyl ether	Benzene	Bromodichloromethane	Bromoform	Bromomethane
						Total or Dissolved	NA	NA	NA	NA	NA	NA
						Permit Limitation/Surcharge Threshold			140 ug/l			
Location	Date	Start Composite	End Composite	Lab Name	Data Status	Lab Report	ug/l	ug/l	ug/l	ug/l	ug/l	ug/l
MH013	9/15/2015	1:30 PM	9:00 PM	Pace	Validated	60202880	--	--	--	--	--	--
MH013	9/15/2015	1:30 PM	9:00 PM	Pace	Validated	60202880	--	--	--	--	--	--
MH013	9/15/2015	1:30 PM	9:00 PM	Pace	Validated	60202895	~~ND~~ <10	ND	~~ND~~ <10	ND	ND	~~ND~~ <50
LPTP Permeate	9/15/2015			LPTP	No QC	LPTP	--	--	--	--	--	--
MH013	9/15/2015			LPTP	No QC	LPTP	--	--	--	--	--	--

MSD 033358

Table 1
LPTP Discharge Samples
Bridgeton Landfill

						Parameter	Carbon tetrachloride	Chlorobenzene	Chlorodibromomethane	Chloroethane	Chloroform	Chloromethane
						Total or Dissolved	NA	NA	NA	NA	NA	NA
						Permit Limitation/Surcharge Threshold						
Location	Date	Start Composite	End Composite	Lab Name	Data Status	Lab Report	ug/l	ug/l	ug/l	ug/l	ug/l	ug/l
MH013	9/15/2015	1:30 PM	9:00 PM	Pace	Validated	60202880	--	--	--	--	--	--
MH013	9/15/2015	1:30 PM	9:00 PM	Pace	Validated	60202880	--	--	--	--	--	--
MH013	9/15/2015	1:30 PM	9:00 PM	Pace	Validated	60202895	ND	~~ND~~ <10	ND	ND	ND	ND
LPTP Permeate	9/15/2015			LPTP	No QC	LPTP	--	--	--	--	--	--
MH013	9/15/2015			LPTP	No QC	LPTP	--	--	--	--	--	--

MSD 033359

Table 1
LPTP Discharge Samples
Bridgeton Landfill

						Parameter	Ethyl benzene	Methylene chloride	Tetrachloroethylene	Toluene	Trichloroethylene	Trichlorofluoromethane
						Total or Dissolved	NA	NA	NA	NA	NA	NA
						Permit Limitation/Surcharge Threshold						
Location	Date	Start Composite	End Composite	Lab Name	Data Status	Lab Report	ug/l	ug/l	ug/l	ug/l	ug/l	ug/l
MH013	9/15/2015	1:30 PM	9:00 PM	Pace	Validated	60202880	--	--	--	--	--	--
MH013	9/15/2015	1:30 PM	9:00 PM	Pace	Validated	60202880	--	--	--	--	--	--
MH013	9/15/2015	1:30 PM	9:00 PM	Pace	Validated	60202895	~~ND~~ <10	~~ND~~ <10	ND	~~ND~~ <10	ND	ND
LPTP Permeate	9/15/2015			LPTP	No QC	LPTP	--	--	--	--	--	--
MH013	9/15/2015			LPTP	No QC	LPTP	--	--	--	--	--	--

MSD 033360

Table 1
LPTP Discharge Samples
Bridgeton Landfill

						Parameter	Vinyl chloride	Xylene, total	4,4'-DDD	4,4'-DDE	4,4'-DDT	a-BHC
						Total or Dissolved	NA	NA	NA	NA	NA	NA
						Permit Limitation/Surcharge Threshold						
Location	Date	Start Composite	End Composite	Lab Name	Data Status	Lab Report	ug/l	ug/l	ug/l	ug/l	ug/l	ug/l
MH013	9/15/2015	1:30 PM	9:00 PM	Pace	Validated	60202880	--	--	--	--	--	--
MH013	9/15/2015	1:30 PM	9:00 PM	Pace	Validated	60202880	--	--	--	--	--	--
MH013	9/15/2015	1:30 PM	9:00 PM	Pace	Validated	60202895	ND	ND	--	--	--	--
LPTP Permeate	9/15/2015			LPTP	No QC	LPTP	--	--	--	--	--	--
MH013	9/15/2015			LPTP	No QC	LPTP	--	--	--	--	--	--

MSD 033361

Christopher J. Bulmahn

From: Bouchard, Derek <DBouchard@republicservices.com>
Sent: Monday, October 12, 2015 4:25 PM
To: Christopher J. Bulmahn
Subject: Bridgeton Landfill LLC 2015 Outfall Report
Attachments: Bridgeton Landfill LLC 2015 Outfall report - September.pdf

1003 803000

Attached, let me know If you have any questions.

Thank you,

REPUBLIC SERVICES

We'll handle it from here.™

Derek Bouchard Environmental Specialist
Bridgeton Landfill, LLC
13570 St. Charles Rock Road
e dbouchard@republicservices.com
o 3146562114 c 3143023634
w republicservices.com

2015

Bridgeton Landfill LLC
Monthly Leachate Outfall Report

10/12/2015 Filed in 15.4

CB
10-13

1003803000

Month	Net Meter Reading	Precipitation Inches	Date of Reading	Gallons	Average Daily Discharge (Gal)	Equivalent Cubic Feet	Equivalent 100 Cubic Feet
January	10,463,750	1.67	2/1/2015	702,337	22,656	93,895.32	938.95
February	11,485,331	1.74	3/1/2015	1,021,581	36,485	136,575.00	1,365.75
March	13,523,218	3	4/1/2015	2,037,887	65,738	272,444.79	2,724.45
April	16,449,016	5.42	5/1/2015	2,925,798	94,381	391,149.47	3,911.49
May	22,998,229	3.62	6/1/2015	6,549,213	211,265	875,563.18	8,755.63
June	29,103,253	13.14	6/30/2015	6,105,025	203,501	816,179.77	8,161.80
July	36,960,514	4.13	7/31/2015	7,857,261	261,909	1,050,435.95	10,504.36
August	43,737,113	6.67	9/1/2015	6,776,599	225,887	905,962.43	9,059.62
September	50,825,952	3.11	10/1/2015	7,088,839	236,295	947,705.68	9,477.06
October							
November							
December							

Note:

MSD 033363

Doug Mendoza

Bridgeton Landfill

From: Ed Galbraith <EGalbraith@barr.com>
Sent: Monday, October 12, 2015 9:03 AM
To: John Lodderhose; Rob G Daly
Cc: Doug Mendoza; Mark Bright; Michael Grace; 'Kamp, Kevin'; 'bpower@republicservices.com'; 'Bouchard, Derek (DBouchard@republicservices.com)'; 'Koziatek, Dan'; Ethan R. Voyles; William C. Selby; 'LaFata, Natalie'
Subject: RE: Report of Sampling - 9/3 sampling report
Attachments: Enthalpy 0715-211.pdf

Ed Galbraith

Senior Environmental Consultant
Jefferson City, MO office: 573.638.5024
cell: 573.418.5562
egalbraith@barr.com
www.barr.com

resourceful. naturally. BARR

From: Ed Galbraith
Sent: Monday, October 12, 2015 9:02 AM
To: 'John Lodderhose'; 'Rob G Daly'
Cc: 'Doug Mendoza'; 'Mark Bright'; 'Michael Grace'; 'Kamp, Kevin'; 'bpower@republicservices.com'; 'Bouchard, Derek (DBouchard@republicservices.com)'; 'Koziatek, Dan'; Ethan R. Voyles; William C. Selby; 'LaFata, Natalie'; Ed Galbraith
Subject: RE: Report of Sampling - 6/30 sampling report

Ed Galbraith

Senior Environmental Consultant
Jefferson City, MO office: 573.638.5024
cell: 573.418.5562
egalbraith@barr.com
www.barr.com

resourceful. naturally. BARR

From: Ed Galbraith
Sent: Monday, October 12, 2015 9:00 AM
To: 'John Lodderhose'; 'Rob G Daly'
Cc: 'Doug Mendoza'; 'Mark Bright'; 'Michael Grace'; 'Kamp, Kevin'; 'bpower@republicservices.com'; 'Bouchard, Derek

Barr Engineering Company – Jefferson City

1001 Diamond Ridge, Suite 1100
Jefferson City, MO 65109

Bridgeton Landfill
Project# 25871014.07400001

Analytical Report
(0715-211)

NIOSH Method 6016-Type

Ammonia

EPA Method TO-15 Analysis

Benzene, Dimethyl sulfide

EPA Method 18-Canister Analysis

Methane

Enthalpy Analytical, Inc.
Phone: (919) 850 - 4392 / Fax: (919) 850 - 9012 / www.enthalpy.com
800-1 Capitola Drive Durham, NC 27713-4385

I certify that to the best of my knowledge all analytical data presented in this report:

- Have been checked for completeness
- Are accurate, error-free, and legible
- Have been conducted in accordance with approved protocol, and that all deviations and analytical problems are summarized in the appropriate narrative(s)

This analytical report was prepared in Portable Document Format (.PDF) and contains 246 pages.

Valgena Respass

QA Review Performed by – Valgena Respass

Report Issued: 09/30/2015

Summary of Results

Enthalpy Analytical

Company: Barr Engineering Company - Jefferson City

Job No.: 0715-211 NIOSH Method 6016-Type (two-fraction) Analysis

Client No.: 25871014.07400001

Summary Table

Sample Name	Ammonia Amt ug	
5685602995	243	
5685602993	6.28	
5685602991	0.575	J
5685602988	0.324	J

Enthalpy Analytical

Company: Barr Engineering Company - Jefferson City

Job No.: 0715-211 EPA Method 18-Type

Client No.: 25871014.07400001

Summary Table

Sample Train Name	LS1583	VC1446
Compound	PPM	PPM
Methane	57.7	2.56 J

Results

Enthalpy Analytical

Company: Barr Engineering Company - Jefferson City

Job No.: 0715-211 NIOSH Method 6016-Type (two-fraction) Analysis

Client No.: 25871014.07400001

Ammonia

Client's Sample Name	Filename #1	Filename #2	Analysis Method	Curve Min	Curve Max	MDL	Ret Time (min)	Ret Time (min)	%diff RT	Conc # 1 (ug/mL)	Conc # 2 (ug/mL)	%diff conc	Avg Conc (ug/mL)	DF	Liquid Vol (mL)	Catch Weight (ug)	Flag
Sil Gel 5685602995 FH	021-2001.D	021-2002.D	Curly pg146a.M	0.470	12.3	0.0235	4.86	4.87	0.1	4.85	4.84	0.1	4.84	5	10.0	242	
Sil Gel 5685602995 BH	022-2101.D	022-2102.D	Curly pg146a.M	0.470	12.3	0.0235	4.73	4.74	0.1	0.0373	0.0372	0.1	0.0373	1	10.0	0.373	J
																243	
Sil Gel 5685602993 FH	023-2201.D	023-2202.D	Curly pg146a.M	0.470	12.3	0.0235	4.80	4.82	0.2	0.614	0.593	1.7	0.604	1	10.0	6.04	
Sil Gel 5685602993 BH	024-2301.D	024-2302.D	Curly pg146a.M	0.470	12.3	0.0235	4.74	4.74	0.0	0.0243	0.0242	0.2	0.0243	1	10.0	0.243	J
																6.28	
Sil Gel 5685602991 FH	025-2401.D	025-2402.D	Curly pg146a.M	0.470	12.3	0.0235	4.73	4.73	0.0	0.0264	0.0235	5.8	0.0249	1	10.0	0.249	J
Sil Gel 5685602991 BH	026-2501.D	026-2502.D	Curly pg146a.M	0.470	12.3	0.0235	4.76	4.73	0.3	0.0322	0.0329	1.1	0.0326	1	10.0	0.326	J
																0.575	
Sil Gel 5685602988 FH	027-2601.D	027-2602.D	Curly pg146a.M	0.470	12.3	0.0235	4.73	4.73	0.0	0.0235	0.0235	0.0	0.0235	1	10.0	0.235	ND
Sil Gel 5685602988 BH	028-2701.D	028-2702.D	Curly pg146a.M	0.470	12.3	0.0235	4.74	4.74	0.0	0.0313	0.0336	3.6	0.0324	1	10.0	0.324	J
																0.324	

Enthalpy Analytical

Company: Barr Engineering Company - Jefferson City

Job No.: 0715-211 NIOSH Method 6016-Type (two-fraction) Analysis

Client No.: 25871014.07400001

Matrix Spike Recovery

Sample Name	Compound	Filename #1	Filename #2	Analysis Method	Ret Time (min)	Ret Time (min)	%diff RT	Conc # 1 (ug/mL)	Conc # 2 (ug/mL)	%diff conc	Avg Conc (ug/mL)	Flag	DF	vol mL	Mass (ug)	Recov %
MS-5685602995.FH	Ammonia	029-2801.D	029-2802.D	Curly pg146a.M	4.86	4.87	0.1	8.80	8.83	0.2	8.82		1	0.520	4.59	
5685602995.FH	Ammonia	021-2001.D	021-2002.D	Curly pg146a.M	4.86	4.87	0.1	24.3	24.2	0.1	24.2		1	0.100	2.42	
													Mass Spiked:		1.89	115
MSD-5685602995.FH	Ammonia	030-2901.D	030-2902.D	Curly pg146a.M	4.86	4.87	0.1	8.33	8.34	0.1	8.34		1	0.520	4.34	
5685602995.FH	Ammonia	021-2001.D	021-2002.D	Curly pg146a.M	4.86	4.87	0.1	24.3	24.2	0.1	24.2		1	0.100	2.42	
													Mass Spiked:		1.89	101

Sample Name	: LS1583
Sample Info	: 0715-211; Can #1583, *5=100mL load
Data File	: L1504074.D
Dilution	: 5
Pressurization Factor	: 2.402
Acquisition Date	: 2015-09-15 19:34:00
Instrument Method	: MM624-L
Matrix	: AIR

Target Compound	Concentration (PPBV)	RL (PPBV)	MDL (PPBV)	Concentration (ug/m3)	RL (ug/m3)	MDL (ug/m3)	Flag *
Benzene	3.12	0.495	0.420	9.97	1.58	1.34	

Internal Standards	Response	Retention Time (min)	Concentration (PPBV)	Flag *
1,4-Difluorobenzene (IS)	2,165,281	14.11	9.60	PASS

(ND) = Not Detected
*** (J) = Below Calibration Range, (E) = Above Calibration Range, (m) = Manual Integration**
IS Acceptance Criteria: RT +/- 20 sec, Response +/- 40%

Sample Name	: VC1446
Sample Info	: 0715-211; Can #1446, 500mL load
Data File	: L1504076.D
Dilution	: 1
Pressurization Factor	: 2.937
Acquisition Date	: 2015-09-15 21:01:00
Instrument Method	: MM624-L
Matrix	: AIR

Target Compound	Concentration (PPBV)	RL (PPBV)	MDL (PPBV)	Concentration (ug/m3)	RL (ug/m3)	MDL (ug/m3)	Flag *
Benzene	0.450	0.121	0.103	1.44	0.387	0.328	

Internal Standards	Response	Retention Time (min)	Concentration (PPBV)	Flag *
1,4-Difluorobenzene (IS)	2,557,250	14.10	9.60	PASS

(ND) = Not Detected
*** (J) = Below Calibration Range, (E) = Above Calibration Range, (m) = Manual Integration**
IS Acceptance Criteria: RT +/- 20 sec, Response +/- 40%

Company	Barr Engineering Company
Analyst	TDD
Parameters	EPA Method TO15 - TICs

Client #	Bridgeton Landfill: Bridgeton, MO
Job #	0715-211
# Samples	2 (6L) Canisters

Sample ID: **LS1583**
Data File: L1504074.D
Tank/Misc ID: 0715-211; Can #1583; *5=100mL load

DF: 5.00
Tank DF: 2.402

Compound	CAS#	MW	Ret. Time (min)	Area	Conc. (ppbv)	Sample Conc. (ppbv)
Dimethyl sulfide	000075-18-3	62.0	8.14	105,116	6.38	76.7

Company	Barr Engineering Company
Analyst	TDD
Parameters	EPA Method TO15 - TICs

Client #	Bridgeton Landfill: Bridgeton, MO
Job #	0715-211
# Samples	2 (6L) Canisters

Sample ID: **VC1446**
Data File: L1504076.D
Tank/Misc ID: 0715-211; Can #1446; 500mL load

DF: 1.0
Tank DF: 2.937

Compound	CAS#	MW	Ret. Time (min)	Area	Conc. (ppbv)	Sample Conc. (ppbv)
Dimethyl sulfide	000075-18-3	62.0	8.13	5,244	0.0553	0.162

Lab QC

Sample Name	: LS1583 LD
Sample Info	: 0715-211; Can #1583, *5=100mL load
Data File	: L1504075.D
Dilution	: 5
Pressurization Factor	: 2.402
Acquisition Date	: 2015-09-15 20:18:00
Instrument Method	: MM624-L
Matrix	: AIR

Target Compound	Concentration (PPBV)	RL (PPBV)	MDL (PPBV)	Concentration (ug/m3)	RL (ug/m3)	MDL (ug/m3)	% Diff	Flag *
Benzene	2.91	0.495	0.420	9.30	1.58	1.34	7.0	

Internal Standards	Response	Retention Time (min)	Concentration (PPBV)	Flag *
1,4-Difluorobenzene (IS)	2,125,809	14.10	9.60	PASS

(ND) = Not Detected
*** (J) = Below Calibration Range, (E) = Above Calibration Range, (m) = Manual Integration**
IS Acceptance Criteria: RT +/- 20 sec, Response +/- 40%

Sample Name	: Humid Blank
Sample Info	: Can #10892; 500mL load
Data File	: L1504072.D
Dilution	: 1
Pressurization Factor	: 1.000
Acquisition Date	: 2015-09-15 18:18:00
Instrument Method	: MM624-L
Matrix	: AIR

Target Compound	Concentration (PPBV)	RL (PPBV)	MDL (PPBV)	Concentration (ug/m3)	RL (ug/m3)	MDL (ug/m3)	Flag *
Benzene	ND	0.0412	0.0350	ND	0.132	0.112	

Internal Standards	Response	Retention Time (min)	Concentration (PPBV)	Flag *
1,4-Difluorobenzene (IS)	2,180,705	14.11	9.60	PASS

(ND) = Not Detected
*** (J) = Below Calibration Range, (E) = Above Calibration Range, (m) = Manual Integration**
IS Acceptance Criteria: RT +/- 20 sec, Response +/- 40%

Sample Name	: 5ppbv TO15 LCS
Sample Info	: Can #1458; 125mL load
Data File	: L1504068.D
Dilution	: 1
Pressurization Factor	: 1.000
Acquisition Date	: 2015-09-15 15:18:00
Instrument Method	: MM624-L
Matrix	: AIR

Target Compound	Concentration (PPBV)	RL (PPBV)	MDL (PPBV)	Concentration (ug/m3)	RL (ug/m3)	MDL (ug/m3)	Flag *
Benzene	5.65	0.0412	0.0350	18.1	0.132	0.112	

Internal Standards	Response	Retention Time (min)	Concentration (PPBV)	Flag *
1,4-Difluorobenzene (IS)	2,145,538	14.11	9.60	PASS

(ND) = Not Detected
*** (J) = Below Calibration Range, (E) = Above Calibration Range, (m) = Manual Integration**
IS Acceptance Criteria: RT +/- 20 sec, Response +/- 40%

Sample Name	: 5ppbv TO15 LCS
Sample Info	: Can #1458; 125mL load
Data File	: L1504068.D
Dilution	: 1
Pressurization Factor	: 1.000
Acquisition Date	: 2015-09-15 15:18:00
Instrument Method	: MM624-L
Matrix	: AIR

Target Compound	Response	Concentration (PPBV)	Tag Value (PPBV)	% Recovery	Flag
Benzene	659,822	5.65	5.15	109.8	PASS

Company	Barr Engineering Company
Analyst	TDD
Parameters	EPA Method TO15 - TICs

Client #	Bridgeton Landfill: Bridgeton, MO
Job #	0715-2511
# Samples	2 (6L) Canisters

Sample ID: **Humid Blank**
Data File: L1504072.D
Tank/Misc ID: Can #10892, 500mL load

DF: 1.00
Tank DF: 1.00

Compound	CAS#	MW	Ret. Time (min)	Area	Conc. (ppbv)	Sample Conc. (ppbv)
Dimethyl sulfide	75-18-2	62	NA	NA	ND	ND

Enthalpy Analytical

Company: Barr Engineering Company - Jefferson City

Job No.: 0715-211 EPA Method 18-Type

Client No.: 25871014.07400001

Methane

Sample ID	Filename #1	Filename #2	Filename #3	Analysis Method	Curve Min	Curve Max	MDL	Ret Time (min)	Ret Time (min)	Ret Time (min)	%dif RT	DF	Conc #1 (ppm)	Conc #2 (ppm)	Conc #3 (ppm)	%dif conc	Avg Conc (ppm)	Final Conc (ppm)	Flag
0715-211.LS1583.CanP2	004F0502.D	004F0503.D	004F0504.D	EDITHP108F_C1-C7.M	5.01	51,300	0.501	1.53	1.53	1.52	0.0	6.337	9.19	9.06	9.08	0.9	9.11	57.7	
0715-211.VC1446.Can	011F0602.D	011F0603.D	011F0604.D	EDITHP108F_C1-C7.M	5.01	51,300	0.501	1.53	1.53	1.53	0.0	2.937	0.885	0.896	0.830	4.6	0.87	2.56	J

Canister and Controller Data Sheet

Enthalpy Analytical Inc.

Client Name: Barr Engineering
Client #: Bridgeton landfill; 25871014.07400001
Enthalpy Job #: 0715-211

Controller Data

Controller ID	Data File	Initial Flow (cc/min)	Return Flow (cc/min)
SB-03541	GC149p146-025F1301	10.6	15.9
SB-03724	GC149p146-025F1301	10.6	13.1
SB-07533	GC149p150-028F6701	10.6	10.6
SB-03726	GC149p150-028F6701	10.6	10.8
SB-01598	GC149p146-026F1601	10.6	8.6
SB-01543	L1501925	10.6	10.0

Canister Data

Canister ID	Data File	Canister Pressure Pre-Sample (mm-Hg)	Canister Pressure Post-Sample (mm-Hg)	Canister Pressure Final (mm-Hg)	Canister Pressurization Factor
1446	L1503127	-762	-256	711	2.937
1583	L1503126	-762	-158	679	2.402

Date Prepared: 7/28/2015 & 7/29/15 By: JAD
Date Received: 9/9/2015 By: VK

Canister Certification Type: Individual **Batch**

Enthalpy Analytical -- Canister Pressurization

Job No.	0715-211
Company	Barr Engineering Company - Jefferson City
Site	Bridgeton Landfill

Can Number	1446	1583
Job	0715-211	0715-211
Sample ID	VC1446	LS1583
CleanDate		
LeakCheckDate		
LeakCheckAnalyst	TDD	
BlankCheckRef	L1503127	
Can Size (L)	6	6
Evac Temp (F)	62.5	62.5
Evac Pbar (mmHg)	761.7	761.7
Evac Gauge (mmHg)	-761.7	-761.7
Evac Analyst	ddaniels	ddaniels
Evac Time	09/16/15 15:12	09/16/15 15:15
Evac Vol (L)	0.000	0.000
Recd. Temp (F)	68.0	68.0
Recd. Pbar (mmHg)	755.1	755.1
Recd. Gauge (mmHg)	-256.0	-158.0
Recd Vol (L)	3.941	4.714
P1 Temp (F)	68.0	68.0
P1 Pbar (mmHg)	755.1	755.1
P1 Gauge (mmHg)	711.0	679.0
P1 Analyst	ddaniels	ddaniels
P1 Time	09/16/15 15:13	09/16/15 15:15
P1 Vol (L)	11.575	11.322
P1 Dilution Factor	2.937	2.402
Mid Temp (F)		72.5
Mid Pbar (mmHg)		761.0
Mid Gauge (mmHg)		-110.8
Mid Vol (L)		5.090
P2 Temp (F)		72.5
P2 Pbar (mmHg)		761.0
P2 Gauge (mmHg)		954.5
P2 Analyst		ddaniels
P2 Time		09/16/15 15:14
P2 Vol (L)		13.429
Combined Dilution Factor		6.337

Narrative Summary

Enthalpy Analytical Narrative Summary

Company	Barr Engineering Company
Analyst	AMP
Parameters	NIOSH Method 6016-Type

Client #	25871014.07
Job #	0515-31
# Samples	4 Runs

Custody	Vaughn Kashuba of Enthalpy Analytical, Inc. received the samples on 9/9/15 at 24.6°C after being relinquished by Barr Engineering Company of Jefferson City, MO. The samples were received in good condition. Prior to, during, and after analysis, the samples were kept under lock with access only to authorized personnel by Enthalpy Analytical, Inc.
Analysis	The samples were analyzed for ammonia using the analytical procedures in NIOSH Method 6016, Ammonia by Ion Chromatography. Each sample train consisted of a single SKC Silica Gel (Cat# 226-10-06) sample tube. Each tube was divided into front half (FH) and back half (BH) fractions and each fraction was desorbed using 10 mL of deionized water. The Agilent Model 1100, High Performance Liquid Chromatograph "Curly" was used for these analyses.
Calibration	The calibration curve is included in the Raw Data section of this report. The data analysis method is referenced in the Analysis Method column on the Detailed Results page. The first page of the curve contains all method specific parameters (i.e., curve type, origin, weight, etc.) used to quantify the samples. The calibration curve section also includes a table with the Retention Time (RetTime), Level (Lvl), Amount (corresponding units), Area, Response Factor (Amt/Area) and the analyte Name. The calibration table is used to identify (by retention time) and quantify each target compound.
Chromatographic Conditions	The acquisition method (ENV_AMM_18MM_DIUF_new.M) is included in the Raw Data section of this report.
QC Notes	The analysis of the laboratory reagent blank detected no ammonia at a concentration greater than the LOQ. Duplicate matrix spikes were prepared using aliquots of sample ***5685602995.FH***. The matrix spikes exhibited spike recovery values of 101% and 115%.
Reporting Notes	The results presented in this report are representative of the samples as provided to the laboratory.

Enthalpy Analytical Narrative Summary

Company	Barr Engineering Company - Jefferson City
Analyst	TDD
Parameters	EPA Method TO-15

Client #	25871014.07400001 Bridgeton Landfill
Job #	0715-211
# Samples	2 (6L) Canisters

Custody

Vaughn Kashuba received the samples on 9/9/15 after being relinquished by Barr Engineering Company - Jefferson City. The samples were received at ambient temperature and in good condition. Prior to, during, and after analysis, the samples were kept under lock with access only to authorized personnel by Enthalpy Analytical, Inc.

Analysis

The samples were analyzed for benzene as a target compound and for dimethyl sulfide as a Tentatively Identified Compound (TIC) using the analytical procedures in EPA Method TO-15, *Determination of Volatile Organic Compounds (VOCs) In Air Collected In Specially-Prepared Canisters And Analyzed by Gas Chromatography/Mass Spectrometry (GC/MS).*

Upon receipt, the canister pressures were measured and recorded. The canisters were then pressurized and a dilution ratio was calculated for each canister. Refer to the Canister Pressurization page in the Results section of this report.

The Hewlett Packard Model 5890, Gas Chromatograph "Lurch" (S/N 2750A15233) was equipped with a 5971A Mass Selective Detector and a Restek Rxi-624 Sil MS, 60 m x 0.32 mm x 1.8 µm (S/N 1035491) capillary column for these analyses. Both the samples and the standards were introduced directly to the analyzer using an Entech 7100A Preconcentrator.

Calibration

The Initial Calibration (***L071815A-TO15***) met 30% RSD criteria. The initial calibration verification met 30% recovery criteria. The continuing calibration verification met 30% difference criteria. The calibration data has been included in the Raw Data sections of this report.

Chromatographic Conditions

The acquisition method ***MM624-L.M*** has been included in the calibration curve chromatograms section of this report.

QC Notes

The associated BFB sample met tune criteria for this analysis.

All Internal Standard response and retention time criteria were met.

The Laboratory Control Sample met 30% Recovery criteria.

Enthalpy Analytical Narrative Summary
(continued)

QC Notes (continued)	Neither benzene nor dimethyl sulfide was present in the analysis of the laboratory Humid Blank at a concentration greater than the MDL. All samples were analyzed within the 30-day holding time specified in the method.
Reporting Notes	The samples were manually searched for the presence of dimethyl sulfide using the primary and secondary ions, 62 and 47. TICs are searched against an Agilent Technologies G1701DA Version D.00.00.38 compound library. Sample concentrations for dimethyl sulfide were calculated using the response of the extracted primary ion, and a default response factor of 1 (standard for TICs). TIC identification is based upon visual comparison of the sample spectra and best-quality library searches. Relative intensities of major ions in the reference spectrum are compared to those in the sample spectrum. Intensities of the major ions should be within 20% of those in the reference spectrum. In some instances a background subtraction may have been performed on the sample spectrum to remove ions that may be present due to contamination or co-eluting peaks. Therefore, all ions present in the sample spectrum may not be present in the reference spectrum. These analyses met the requirements of the TNI Standard. Any deviations from the requirements of the reference method or TNI Standard have been stated above. The results presented in this report are representative of the samples as provided to the laboratory. The analyses associated with this data report were performed at 2202 Ellis Road, Durham, NC 27703.

Enthalpy Analytical Narrative Summary

Company	Barr Engineering Company
Analyst	JKG
Parameters	EPA Method 18-Type

Client #	25871014.07400001
Job #	0715-211
# Samples	2 Canisters

Custody

Vaughn Kashuba of Enthalpy Analytical, Inc. received the samples on 9/9/15 at ambient temperature after being relinquished by Barr Engineering Company of Jefferson City, MO. The samples were received in good condition. Prior to, during, and after analysis, the samples were kept under lock with access only to authorized personnel by Enthalpy Analytical, Inc.

Analysis

The samples were analyzed for methane using the general analytical procedures in EPA Method 18, Measurement of Gaseous Organic Compound Emissions by Gas Chromatography (40 CFR Part 60, Appendix A).

All samples and standards were introduced directly to the column using an automated multi-port Valco gas sampling valve equipped with a stainless steel loop. Methane was referenced to certified gas phase standards.

Upon receipt, the canister pressures were measured and recorded. The caniters were then pressurized and a dilution ratio was calculated for each canister. Refer to the Canister Pressurization page in the Results section of this report.

The Agilent Technologies Model 6890, Gas Chromatograph ("Edith") was equipped with a Flame Ionization Detector a Restek 10198 Rtx-1 S/N 806941 column.

Calibration

The calibration curve is included in the Raw Data section of this report. The data analysis method is and referenced in the Analysis Method column on the Detailed Results page.

For each calibration curve used, the first page of the curve contains all method specific parameters (i.e., curve type, origin, weight, etc.) used to quantify the samples. The calibration curve section also includes a table with the Retention Time (RetTime), Level (Lvl), Amount (corresponding units), Area, Response Factor (Amt/Area) and the analyte Name. The calibration table is used to identify (by retention time) and quantify each target compound.

Enthalpy Analytical Narrative Summary
(continued)

Chromatographic Conditions	The acquisition method (GC139P039_HRVOC.M) is included in the Raw Data section of this report.
QC Notes	The analysis of the laboratory zero air blank did not contain methane at a concentration greater than the LOQ.
Reporting Notes	The results presented in this report are representative of the samples as provided to the laboratory.

General Reporting Notes

The following are general reporting notes that are applicable to all Enthalpy Analytical, Inc. data reports, unless specifically noted otherwise.

- Any analysis which refers to the method as ***"Type"*** represents a planned deviation from the reference method. For instance a Hydrogen Sulfide assay from a Tedlar bag would be labeled as "EPA Method 16-Type" because Tedlar bags are not mentioned as one of the collection options in EPA Method 16.
- The acronym ***MDL*** represents the Minimum Detection Limit. Below this value the laboratory cannot determine the presence of the analyte of interest reliably.
- The acronym ***LOQ*** represents the Limit of Quantification. Below this value the laboratory cannot quantitate the analyte of interest within the criteria of the method.
- The acronym ***ND*** following a value indicates a non-detect or analytical result below the MDL.
- The letter ***J*** in the Qualifier or Flag column in the results indicates that the value is between the MDL and the LOQ. The laboratory can positively identify the analyte of interest as present, but the value should be considered an estimate.
- The letter ***E*** in the Qualifier or Flag column indicates an analytical result exceeding 100% of the highest calibration point. The associated value should be considered as an estimate.
- The acronym ***DF*** represents Dilution Factor. This number represents dilution of the sample during the preparation and/or analysis process. The analytical result taken from a laboratory instrument is multiplied by the DF to determine the final undiluted sample results.
- The addition of ***MS*** to the Sample ID represents a Matrix Spike. An aliquot of an actual sample is spiked with a known amount of analyte so that a percent recovery value can be determined. The MS analysis indicates what effect the sample matrix may have on the target analyte, i.e. whether or not anything in the sample matrix interferes with the analysis of the analyte(s).
- The addition of ***MSD*** to the Sample ID represents a Matrix Spike Duplicate. Prepared in the same manner as a MS, the use of duplicate matrix spikes allows further confirmation of laboratory quality by showing the consistency of results gained by performing the same steps multiple times.
- The addition of ***LD*** to the Sample ID represents a Laboratory Duplicate. The analyst prepares an additional aliquot of sample for testing and the results of the duplicate analysis are compared to the initial result. The result should have a difference value of within 10% of the initial result (if the results of the original analysis are greater than the LOQ).
- The addition of ***AD*** to the Sample ID represents an Alternate Dilution. The analyst prepares an additional aliquot at a different dilution factor (usually double the initial factor). This analysis helps confirm that no additional compound is present and coeluting or sharing absorbance with the analyte of interest, as they would have a different response/absorbance than the analyte of interest.

General Reporting Notes

(continued)

- The Sample ID ***LCS*** represents a Laboratory Control Sample. Clean matrix, similar to the client sample matrix, prepared and analyzed by the laboratory using the same reagents, spiking standards and procedures used for the client samples. The LCS is used to assess the control of the laboratory's analytical system. Whenever spikes are prepared for our client projects, two spikes are retained as LCSs. The LCSs are labeled with the associated project number and kept in-house at the appropriate temperature conditions. When the project samples are received for analysis, the LCSs are analyzed to confirm that the analyte could be recovered from the media, separate from the samples which were used on the project and which may have been affected by source matrix, sample collection and/or sample transport.
- **Significant Figures**: Where the reported value is much greater than unity (1.00) in the units expressed, the number is rounded to a whole number of units, rather than to 3 significant figures. For example, a value of 10,456.45 ug catch is rounded to 10,456 ug. There are five significant digits displayed, but no confidence should be placed on more than two significant digits.
- **Manual Integration**: The data systems used for processing will flag manually integrated peaks with an "M". There are several reasons a peak may be manually integrated. These reasons will be identified by the following two letter designations on sample chromatograms, if provided in the report. The peak was ***not integrated*** by the software **"NI"**, the peak was ***integrated incorrectly*** by the software **"II"** or the ***wrong peak*** was integrated by the software **"WP"**. These codes will accompany the analyst's manual integration stamp placed next to the compound name on the chromatogram.

Sample Custody

ENTHALPY analytical, inc.

Chain of Custody Record

Page____of____

Special Handling:
- ☒ Standard Turn Around Time (10 business days)
- ☐ Rush Turn Around Time -- Date Needed_____
- All TATs Subject to Approval by Enthalpy Analytical, Inc.
- All Bag/Can Samples Disposed of 1 Month from Receipt.
- All Other Samples Disposed of 4 Months from Receipt.

Client Name: Barr Engineering Company
Project Manager: Ed Galbraith
Report To: Ed Galbraith

Project Number: 25871014.07 400 001
Site Name: Bridgeton Landfill
Location: Bridgeton, MO

PO#:
Telephone#: 573-638-5024
Email: egalbraith@barr.com

For spiked or duplicate samples: please provide sample volumes for recovery calculations. For Particulates: please provide tare weights and/or condensed water volumes.

Special Instructions:

A=Air 1=H2SO4 2=NaOH W=Water O=Other
X=XAD C=Charcoal SG=Silica Gel
G=Grab C=Composite Q=Quality Control O=Other

Sample ID	Date	Time	Sample Volume	Type	Matrix	# of VOA Vials	# of Glass	# of Plastic	# of Bags	# of Canisters	# of Tubes	# of Other	Ammonia							Notes:
5685602993	9/3/15	12:45-1:45 pm	48 L	G	A						1		X							
5685602991	↓	12:50-1:50 pm	↓	G	A						1		X							
5685602995	↓	4:25-5:25 pm	↓	G	A						1		X							
5685602988	↓	4:30-5:30 pm	↓	G	A						1		X							
			(800 mL/min)																	

Relinquished By:	Date:	Received By:	Date:	Time:	Sample Condition Upon Receipt:
Ethan Voyles / Barr via Fedex	9/4/15	[illegible]	9/4/15	10:00	☐ Iced ☐ Ambient ☐ °C 24.6
					☐ Iced ☐ Ambient ☐ °C_____
					☐ Iced ☐ Ambient ☐ °C_____

800-1 Capitola Drive • Durham, NC 27713 • (919) 850-4392 • FAX (919) 850-9012 • www.enthalpy.com

Chain of Custody Record

ENTHALPY analytical, inc.

Page____of____

Special Handling:
- ☒ Standard Turn Around Time (10 business days)
- ☐ Rush Turn Around Time -- Date Needed_____
- All TATs Subject to Approval by Enthalpy Analytical, Inc.
- All Bag/Can Samples Disposed of 1 Month from Receipt.
- All Other Samples Disposed of 4 Months from Receipt.

Client Name: Barr Engineering Company
Project Manager: Ed Galbraith
Report To: Ed Galbraith

Project Number: 25871014.07 400 001
Site Name: Bridgeton Landfill
Location: Bridgeton, MO

PO#:
Telephone#: 573-638-5024
Email: egalbraith@barr.com

For spiked or duplicate samples: please provide sample volumes for recovery calculations. For Particulates: please provide tare weights and/or condensed water volumes.

Special Instructions:

A=Air 1=H2SO4 2=NaOH W=Water O=Other
X=XAD C=Charcoal SG=Silica Gel
G=Grab C=Composite Q=Quality Control O=Other

Sample ID	Date	Time	Sample Volume	Type	Matrix	# of VOA Vials	# of Glass	# of Plastic	# of Bags	# of Canisters	# of Tubes	# Other	Benzene	Dimethyl Sulfide	Ammonia	Methane					Notes:
LS1583	9/3/15	9:20 5:20pm	6L	G	A					1			X	X	X	X					
VC1446	9/3/15	9:30 5:30pm	6L	G	A					1			X	X	X	X					

Relinquished By:	Date:	Received By:	Date:	Time:	Sample Condition Upon Receipt
Ethan Vogles/Barr via Fedex	9/4/15	[illegible]	9/9/15	1005	☐ Iced ☐ Ambient ☐ °C 24.6
					☐ Iced ☐ Ambient ☐ °C_____
					☐ Iced ☐ Ambient ☐ °C_____

800-1 Capitola Drive • Durham, NC 27713 • (919) 850-4392 • FAX (919) 850-9012 • www.enthalpy.com

MSD 033396

10.0 FATS, OIL AND GREASE PROGRAM

Pursuant to Consent Decree requirement VIII.73.h, MSD is reporting the status of the Fats, Oil and Grease ("FOG") Control Program Plan. MSD has had a FOG Control Program in place since 1995. During CY12, the elements of this existing program were updated in accordance with the Consent Decree requirement V.H.35 and were approved by EPA in a letter dated December 18, 2012.

10.1 Summary of FOG Inspections

Located within MSD's service area are approximately 4,100 facilities having the potential to discharge significant amounts of FOG into the sanitary sewer system. Under the FOG Control Program, MSD identifies and inspects businesses prone to FOG accumulation. The business types primarily targeted for inspection are FOG commercial establishments/food service establishments ("FSEs") and industrial facilities. During CY14, MSD's Department of Engineering – Division of Environmental Compliance ("DEC") inspected FOG control equipment at 2,650 FOG commercial establishments/FSEs and industrial facilities to evaluate proper operation and maintenance of each facility's FOG control equipment.

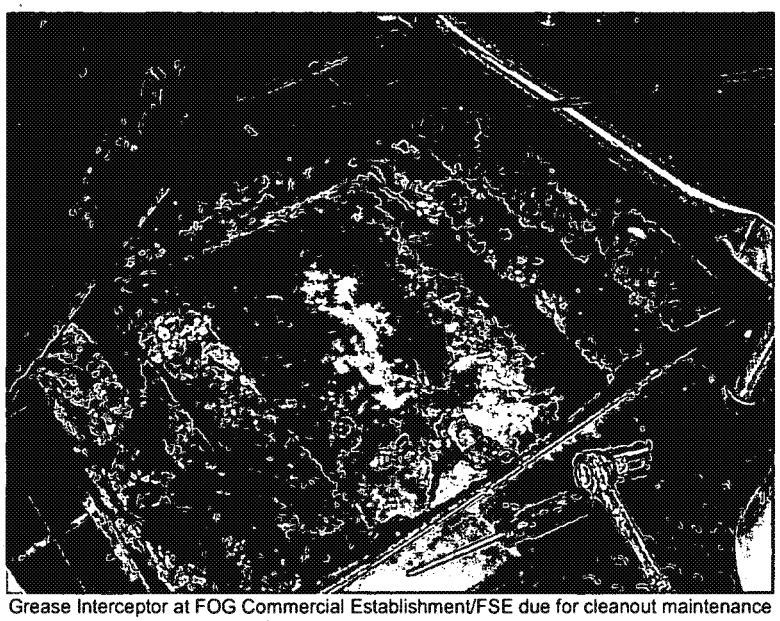

Grease Interceptor at FOG Commercial Establishment/FSE due for cleanout maintenance

MSD Ordinance 12559 limits the concentration of total oil and grease to 200 mg/L at the point of discharge into MSD's sanitary sewer system. MSD Ordinance 12559 also prohibits the discharge of FOG in quantities capable of causing obstruction to flow within

MSD's sanitary sewer system and/or treatment plants. Enforcement action can be taken against facilities found to be in violation of the ordinance.

10.2 Summary of FOG Enforcement

Enforcement actions are handled on a case by case basis, vary based on the severity of the violation, and range from notification of ordinance requirements to legal action. During CY14, MSD issued formal Notice of Violation ("NOV") to FOG commercial establishments/FSEs and industrial facilities on one hundred seventy-seven (177) occasions. In lieu of a formal NOV, MSD issued verbal or written notice of ordinance requirements to FOG commercial establishments/FSEs on thirty-three (33) occasions during CY14. No administrative orders under the provisions of the ordinance were issued during CY14. Under the Enforcement provisions of Ordinance 12559, MSD may seek recovery of non-routine maintenance costs from users violating the Ordinance. During CY14, MSD issued invoices to FOG dischargers to recover costs on five (5) occasions. Four (4) industrial facilities generating FOG were identified by MSD as being in significant noncompliance due to food-based oil and grease in their discharge, and the lists identifying these facilities were published in the newspaper.

Bridgeton Landfill

Doug Mendoza

From: Ed Galbraith <EGalbraith@barr.com>
Sent: Monday, October 12, 2015 9:02 AM
To: John Lodderhose; Rob G Daly
Cc: Doug Mendoza; Mark Bright; Michael Grace; 'Kamp, Kevin'; 'bpower@republicservices.com'; 'Bouchard, Derek (DBouchard@republicservices.com)'; 'Koziatek, Dan'; Ethan R. Voyles; William C. Selby; 'LaFata, Natalie'; Ed Galbraith
Subject: RE: Report of Sampling - 6/30 sampling report
Attachments: 0615-39.pdf

Ed Galbraith

Senior Environmental Consultant
Jefferson City, MO office: 573.638.5024
cell: 573.418.5562
egalbraith@barr.com
www.barr.com

resourceful. naturally. BARR

From: Ed Galbraith
Sent: Monday, October 12, 2015 9:00 AM
To: 'John Lodderhose'; 'Rob G Daly'
Cc: 'Doug Mendoza'; 'Mark Bright'; 'Michael Grace'; 'Kamp, Kevin'; 'bpower@republicservices.com'; 'Bouchard, Derek (DBouchard@republicservices.com)'; 'Koziatek, Dan'; Ethan R. Voyles; William C. Selby; 'LaFata, Natalie'; Ed Galbraith
Subject: Report of Sampling

Attached is the most recent Technical Memorandum for air sampling at PS-1 This report covers both the 6/30/2015 and 9/2/2015 sampling events. I will send the Enthalpy lab reports under separate emails to meet MSD's size restrictions.

Rob, would you let me that everything gets through. Thanks, I appreciate it.

Ed Galbraith

Senior Environmental Consultant
Jefferson City, MO office: 573.638.5024
cell: 573.418.5562
egalbraith@barr.com
www.barr.com

resourceful. naturally. BARR

Barr Engineering Company

1001 Diamond Ridge, Suite 1100
Jefferson City, MO 65109

Bridgeton Landfill

Project # 25871014.07

Analytical Report
(0615-39)

NOISH Method 6016-Type

Ammonia

EPA Method TO-15

Benzene and Dimethyl sulfide

EPA Method 18-Type

Methane

Enthalpy Analytical, Inc.

Phone: (919) 850 - 4392 / Fax: (919) 850 - 9012 / www.enthalpy.com
800-1 Capitola Drive Durham, NC 27713-4385

I certify that to the best of my knowledge all analytical data presented in this report:

- Have been checked for completeness
- Are accurate, error-free, and legible
- Have been conducted in accordance with approved protocol, and that all deviations and analytical problems are summarized in the appropriate narrative(s)

This analytical report was prepared in Portable Document Format (.PDF) and contains 353 pages.

Michael Steven Schapira

QA Review Performed by: Michael Steven Schapira

Report Issued: 7/21/15

Summary of Results

Enthalpy Analytical

Company: Barr Engineering Company - Jefferson City

Job No.: 0615-39 line 1. NOISH Method 6016-Type (two-fraction)

Client No: 25871014.07

Ammonia Summary Table

Sample ID	Times	Catch Weight (µg)
LS5685603024	***11-12***	221
LS5685603018	***3-4***	143
VC5685603023	***11-12***	4.75
VC5685603026	***3-4***	1.97

Enthalpy Analytical

Company: Barr Engineering Company - Jefferson City
Job No.: 0615-39 line 2. EPA Method TO-15
Client No: 25871014.07

	Benzene	Dimethyl sulfide
Sample ID	Conc. (ppbv)	Estimated Conc. (ppbv)
LS10888	269	2,103
VC3211	15.0	12.1

Enthalpy Analytical

Company: Barr Engineering Company - Jefferson City

Job No.: 0615-39 line 3. EPA Method 18-Type Canister

Client No.: 25871014.07

Summary Table

Sample ID / Can ID / Concentration (ppmv)

Compound	***LS10888 Can000016***	***VC3211 Can1434***
Methane	5,728	8.70 J

Results

Enthalpy Analytical

Company: Barr Engineering Company - Jefferson City

Job No.: 0615-39 line 1. NOISH Method 6016-Type (two-fraction)

Client No: 25871014.07

Ammonia

Sample ID / Fraction	Filename #1	Filename #2	Analysis Method	Curve Min	Curve Max	MDL	Ret Time (min)	Ret Time (min)	%diff RT	Conc # 1 (ug/mL)	Conc # 2 (ug/mL)	%diff conc	Avg Conc (ug/mL)	DF	Liquid Vol (mL)	Catch Weight (ug)	Flag
LS5685603024 FH	023-0301.D	023-0302.D	Curly pg109.M	0.235	12.3	0.0235	4.67	4.66	0.1	3.80	3.77	0.4	3.78	5	10.0	189	
LS5685603024 BH	024-1001.D	024-1002.D	Curly pg109.M	0.235	12.3	0.0235	4.71	4.72	0.1	3.14	3.24	1.6	3.19	1	10.0	31.9	
																221	
LS5685603018 FH	021-0201.D	021-0202.D	Curly pg109.M	0.235	12.3	0.0235	4.65	4.65	0.0	2.83	2.83	0.1	2.83	5	10.0	141	
LS5685603018 BH	022-0801.D	022-0802.D	Curly pg109.M	0.235	12.3	0.0235	4.65	4.65	0.1	0.187	0.161	7.5	0.174	1	10.0	1.74	J
																143	
VC5685603023 FH	025-1101.D	025-1102.D	Curly pg109.M	0.235	12.3	0.0235	4.64	4.64	0.0	0.292	0.307	2.6	0.299	1	10.0	2.99	
VC5685603023 BH	026-1201.D	026-1202.D	Curly pg109.M	0.235	12.3	0.0235	4.64	4.65	0.0	0.174	0.177	0.9	0.176	1	10.0	1.76	J
																4.75	
VC5685603026 FH	091-0201.D	091-0202.D	Curly pg119.M	0.470	12.3	0.0235	4.34	4.33	0.2	0.0577	0.0480	18.3	0.0528	1	10.0	0.528	J
VC5685603026 BH	028-1401.D	028-1402.D	Curly pg109.M	0.235	12.3	0.0235	4.65	4.66	0.1	0.111	0.177	22.8	0.144	1	10.0	1.44	J
																1.97	J

Enthalpy Analytical

Company: Barr Engineering Company - Jefferson City

Job No.: 0615-39 line 1. NOISH Method 6016-Type (two-fraction)

Client No: 25871014.07

Matrix Spike Recovery

Sample Name	Compound	Filename #1	Filename #2	Analysis Method	Ret Time (min)	Ret Time (min)	%diff RT	Conc # 1 (ug/mL)	Conc # 2 (ug/mL)	%diff conc	Avg Conc (ug/mL)	DF	Vol. (mL)	Catch Weight (ug)
MS / LS5685603018 FH	Ammonia	029-0401.D	029-0402.D	Curly pg109.M	4.65	4.65	0.0	5.98	6.04	0.5	6.01	1	0.520	3.13
													Native Amount (ug):	1.41
													Mass Spiked:	1.89
													Recovery:	90.6%
MSD / LS5685603018 FH --	Ammonia	030-0501.D	030-0502.D	Curly pg109.M	4.65	4.65	0.0	6.24	6.19	0.5	6.22	1	0.520	3.23
													Native Amount (ug):	1.41
													Mass Spiked:	1.89
													Recovery:	96.3%

Sample Name	: VC3211
Sample Info	: 0615-39; Can#1434; *5=100mL load
Data File	: L1502862.D
Dilution	: 5
Pressurization Factor	: 2.442
Acquisition Date	: 2015-07-11 13:01:00
Instrument Method	: MM624-L
Matrix	: AIR

Target Compound	Concentration (PPBV)	RL (PPBV)	MDL (PPBV)	Concentration (ug/m3)	RL (ug/m3)	MDL (ug/m3)	Flag *
Benzene	15.0	0.503	0.427	47.8	1.61	1.37	

Internal Standards	Response	Retention Time (min)	Concentration (PPBV)	Flag *
1,4-Difluorobenzene (IS)	2,848,306	14.18	9.60	PASS

(ND) = Not Detected
*** (J) = Below Calibration Range, (E) = Above Calibration Range, (m) = M**
IS Acceptance Criteria: RT +/- 20 sec, Response +/- 40%

Company	Barr Engineering Company
Analyst	TDD
Parameters	EPA Method TO15 - TICs

Client #	Bridgeton Landfill: Bridgeton, MO
Job #	0615-39
# Samples	2 (3L) Canisters

Sample ID: **VC3211**
Data File: L1502862.D
Tank/Misc ID: 0615-39; Can #1434; *5=100mL load

DF: 5.00
Tank DF: 2.442

Compound	CAS#	MW	Ret. Time (min)	Area	Conc. (ppbv)	Sample Conc. (ppbv)
Dimethyl sulfide	000075-18-3	62.0	8.14	105,116	0.995	12.1

Sample Name	: LS10888
Sample Info	: 0615-120; Can #000016; *20=25mL load
Data File	: L1502870.D
Dilution	: 20
Pressurization Factor	: 2.531
Acquisition Date	: 2015-07-11 21:30:00
Instrument Method	: MM624-L
Matrix	: AIR

Target Compound	Concentration (PPBV)	RL (PPBV)	MDL (PPBV)	Concentration (ug/m3)	RL (ug/m3)	MDL (ug/m3)	Flag *
Benzene	269	2.09	1.77	859	6.66	5.66	

Internal Standards	Response	Retention Time (min)	Concentration (PPBV)	Flag *
1,4-Difluorobenzene (IS)	2,331,181	14.18	9.60	PASS

(ND) = Not Detected
*** (J) = Below Calibration Range, (E) = Above Calibration Range, (m) = M**
IS Acceptance Criteria: RT +/- 20 sec, Response +/- 40%

Company	Barr Engineering Company
Analyst	TDD
Parameters	EPA Method TO15 - TICs

Client #	Bridgeton Landfill: Bridgeton, MO
Job #	0615-39
# Samples	2 (3L) Canisters

Sample ID: **LS10888**
Data File: L1502870.D
Tank/Misc ID: 0615-39; Can #000016; *20=25mL load

DF: 20.0
Tank DF: 2.531

Compound	CAS#	MW	Ret. Time (min)	Area	Conc. (ppbv)	Sample Conc. (ppbv)
Dimethyl sulfide	000075-18-3	62.0	8.13	3,685,770	41.5	2,103

Enthalpy Analytical

Company: Barr Engineering Company - Jefferson City
Job No.: 0615-39 line 1. NOISH Method 6016-Type (two-fraction) Analysis
Client No.: 25871014.07

Methane

Sample ID	Filename #1	Filename #2	Filename #3	Analysis Method	Curve Min	Curve Max	MDL	Ret Time (min)	Ret Time (min)	Ret Time (min)	%dif RT	DF	Conc #1	Conc #2	Conc #3	%dif conc	Avg Conc (ppm)	Final Conc (ppm)	Flag
LS10888 Can000016	003F0801.D	003F0802.D	003F0803.D	EDITHP108F_C1-C7.M	5.01	51,300	0.501	1.53	1.53	1.53	0.0	2.531	2,291	2,259	2,238	1.3	2,263	5,728	
VC3211 Can1434	004F0901.D	004F0902.D	004F0903.D	EDITHP108F_C1-C7.M	5.01	51,300	0.501	1.53	1.53	1.53	0.0	2.443	4.26	4.06	2.37	33.5	3.56	8.70	J

Canister and Controller Data Sheet

Enthalpy Analytical Inc.

Client Name: Barr Engineering
Client #: 25871014.07
Enthalpy Job #: 0615-39#2

Controller Data

Controller ID	Data File	Initial Flow (cc/min)	Return Flow (cc/min)
SB-01210	GC149p146-027F1901	10.6	11.7
SB-01721	GC149p146-027F1901	10.6	11.1

Canister Data

Canister ID	Data File	Canister Pressure Pre-Sample (mm-Hg)	Canister Pressure Post-Sample (mm-Hg)	Canister Pressure Final (mm-Hg)	Canister Pressurization Factor
1434	T1501224	-762	-163	704	2.442
000016	T1501222	-762	-175	727	2.531

Date Prepared: 6/26/2015 By: JAD
Date Received: 7/3/2015 By: SDM

Canister Certification Type: **Individual** **Batch**

Lab QC

Sample Name	: LS10888 LD
Sample Info	: 0615-120; Can #000016; *20=25mL load
Data File	: L1502871.D
Dilution	: 20
Pressurization Factor	: 2.531
Acquisition Date	: 2015-07-11 22:10:00
Instrument Method	: MM624-L
Matrix	: AIR

Target Compound	Concentration (PPBV)	RL (PPBV)	MDL (PPBV)	Concentration (ug/m3)	RL (ug/m3)	MDL (ug/m3)	% Diff	Flag *
Benzene	283	2.09	1.77	906	6.66	5.66	5.27	

Internal Standards	Response	Retention Time (min)	Concentration (PPBV)	Flag *
1,4-Difluorobenzene (IS)	2,756,521	14.18	9.60	PASS

(ND) = Not Detected
*** (J) = Below Calibration Range, (E) = Above Calibration Range, (m) = Man**
IS Acceptance Criteria: RT +/- 20 sec, Response +/- 40%

Sample Name	: Humid Blank
Sample Info	: Can #1585, 500mL load
Data File	: L1502831.D
Dilution	: 1
Pressurization Factor	: 1.000
Acquisition Date	: 2015-07-10 15:49:00
Instrument Method	: MM624-L
Matrix	: AIR

Target Compound	Concentration (PPBV)	RL (PPBV)	MDL (PPBV)	Concentration (ug/m3)	RL (ug/m3)	MDL (ug/m3)	Flag *
Benzene	ND	0.0412	0.0350	ND	0.132	0.112	

Internal Standards	Response	Retention Time (min)	Concentration (PPBV)	Flag *
1,4-Difluorobenzene (IS)	2,387,069	14.18	9.60	PASS

(ND) = Not Detected
*** (J) = Below Calibration Range, (E) = Above Calibration Range, (m) = M**
IS Acceptance Criteria: RT +/- 20 sec, Response +/- 40%

Sample Name	: Humid Blank
Sample Info	: Can #1585, 500mL load
Data File	: L1502869.D
Dilution	: 1
Pressurization Factor	: 1.000
Acquisition Date	: 2015-07-11 20:50:00
Instrument Method	: MM624-L
Matrix	: AIR

Target Compound	Concentration (PPBV)	RL (PPBV)	MDL (PPBV)	Concentration (ug/m3)	RL (ug/m3)	MDL (ug/m3)	Flag *
Benzene	ND	0.0412	0.0350	ND	0.132	0.112	

Internal Standards	Response	Retention Time (min)	Concentration (PPBV)	Flag *
1,4-Difluorobenzene (IS)	2,296,813	14.17	9.60	PASS

(ND) = Not Detected
*** (J) = Below Calibration Range, (E) = Above Calibration Range, (m) = M**
IS Acceptance Criteria: RT +/- 20 sec, Response +/- 40%

Sample Name	: 5ppbv TO15 LCS
Sample Info	: Can #1429; 125mL load
Data File	: L1502830.D
Dilution	: 1
Pressurization Factor	: 1.000
Acquisition Date	: 2015-07-10 15:05:00
Instrument Method	: MM624-L
Matrix	: AIR

Target Compound	Concentration (PPBV)	RL (PPBV)	MDL (PPBV)	Concentration (ug/m3)	RL (ug/m3)	MDL (ug/m3)	Flag *
Benzene	4.91	0.0412	0.0350	15.7	0.132	0.112	

Internal Standards	Response	Retention Time (min)	Concentration (PPBV)	Flag *
1,4-Difluorobenzene (IS)	2,415,155	14.17	9.60	PASS

(ND) = Not Detected
*** (J) = Below Calibration Range, (E) = Above Calibration Range, (m) = M**
IS Acceptance Criteria: RT +/- 20 sec, Response +/- 40%

Sample Name	: 5ppbv TO15 LCS
Sample Info	: Can #1429; 125mL load
Data File	: L1502830.D
Dilution	: 1
Pressurization Factor	: 1.000
Acquisition Date	: 2015-07-10 15:05:00
Instrument Method	: MM624-L
Matrix	: AIR

Target Compound	Response	Concentration (PPBV)	Tag Value (PPBV)	% Recovery	Flag
Benzene	637,379	4.91	5.15	95.3	PASS

Sample Name	: 5ppbv TO15 LCS
Sample Info	: Can #1455; 125mL load
Data File	: L1502867.D
Dilution	: 1
Pressurization Factor	: 1.000
Acquisition Date	: 2015-07-11 18:39:00
Instrument Method	: MM624-L
Matrix	: AIR

Target Compound	Concentration (PPBV)	RL (PPBV)	MDL (PPBV)	Concentration (ug/m3)	RL (ug/m3)	MDL (ug/m3)	Flag *
Benzene	5.21	0.0412	0.0350	16.6	0.132	0.112	

Internal Standards	Response	Retention Time (min)	Concentration (PPBV)	Flag *
1,4-Difluorobenzene (IS)	2,427,136	14.17	9.60	PASS

(ND) = Not Detected
*** (J) = Below Calibration Range, (E) = Above Calibration Range, (m) = M**
IS Acceptance Criteria: RT +/- 20 sec, Response +/- 40%

Sample Name	: 5ppbv TO15 LCS
Sample Info	: Can #1455; 125mL load
Data File	: L1502867.D
Dilution	: 1
Pressurization Factor	: 1.000
Acquisition Date	: 2015-07-11 18:39:00
Instrument Method	: MM624-L
Matrix	: AIR

Target Compound	Response	Concentration (PPBV)	Tag Value (PPBV)	% Recovery	Flag
Benzene	679,514	5.21	5.15	101.1	PASS

Company	Barr Engineering Company	Client #	Bridgeton Landfill: Bridgeton, MO
Analyst	TDD	Job #	0515-31
Parameters	EPA Method TO15 - TICs	# Samples	2 (3L) Canisters

Sample ID: **Humid Blank**
Data File: L1502831.D
Tank/Misc ID: Can #1585, 500mL load

DF: 1.00
Tank DF: 1.00

Compound	CAS#	MW	Ret. Time (min)	Area	Conc. (ppbv)	Sample Conc. (ppbv)
Dimethyl sulfide	75-18-2	62	NA	NA	ND	ND

Company	Barr Engineering Company
Analyst	TDD
Parameters	EPA Method TO15 - TICs

Client #	Bridgeton Landfill: Bridgeton, MO
Job #	0515-31
# Samples	2 (3L) Canisters

Sample ID: **Humid Blank**
Data File: L1502869.D
Tank/Misc ID: Can #1585, 500mL load

DF: 1.00
Tank DF: 1.00

Compound	CAS#	MW	Ret. Time (min)	Area	Conc. (ppbv)	Sample Conc. (ppbv)
Dimethyl sulfide	75-18-2	62	NA	NA	ND	ND

Narrative Summary

Enthalpy Analytical Narrative Summary

Company	Barr Engineering Company
Analyst	LAH
Parameters	NOISH Method 6016-Type

Client #	25871014.07
Job #	0615-39
# Samples	4 Runs

Custody	Summer Mims of Enthalpy Analytical, Inc. received the samples on 7/3/15 at ambient temperature after being relinquished by Barr Engineering Company of Jefferson City, MO. The samples were received in good condition. Prior to, during, and after analysis, the samples were kept under lock with access only to authorized personnel by Enthalpy Analytical, Inc.
Analysis	The samples were analyzed for ammonia using the general analytical procedures in NOISH Method 6016. The Silica gel tubes were each desorbed in two fractions, the front half (FH) and the back half (BH). Each fraction was desorbed in 10 mL of Millipore water, while placed on a 2-dimensional shaker for 30 minutes at 400 rpm. The samples were then allowed to sit for an hour before aliquots were removed for analysis. The Agilent Model 1100, High Performance Liquid Chromatograph ("Curly") was equipped with a Conductivity Detector.
Calibration	The calibration curve is located in the Raw Data section of this report and referenced in the Analysis Method column on the Detailed Results page. For each calibration curve used, the first page of the curve contains all method specific parameters (i.e., curve type, origin, weight, etc.) used to quantify the samples. The calibration curve section also includes a table with the Retention Time (RetTime), Level (Lvl), Amount (corresponding units), Area, Response Factor (Amt/Area) and the analyte Name. The calibration table is used to identify (by retention time) and quantify each target compound.
Chromatographic Conditions	The acquisition method ENV_AMM_18MM_DIUF_new.M is included in the Raw Data section of this report.
QC Notes	The analysis of ***hplc-stdspg082 #SS*** second source standard exhibited a spike recovery value of 98.0%.

Enthalpy Analytical Narrative Summary
(continued)

QC Notes (continued)	Duplicate matrix spikes were prepared using aliquots of sample ***LS5685603018.FH***. The matrix spikes were analyzed in the same manner as the samples and resulted in spike recovery values of 90.6% and 96.3%. The analyses of the laboratory reagent blank did not contain ammonia at a concentration greater than the LOQ.
Reporting Notes	The results presented in this report are representative of the samples as provided to the laboratory.

Enthalpy Analytical Narrative Summary

Company	Barr Engineering Company
Analyst	TDD / PPH
Parameters	EPA Method TO-15

Client #	Bridgeton Landfill
Job #	0615-39
# Samples	2 (6L) Canisters

Custody

Summer Mims received the samples on 7/3/15 after being relinquished by Barr Engineering Company. The samples were received at ambient temperature and in good condition. Prior to, during, and after analysis, the samples were kept under lock with access only to authorized personnel by Enthalpy Analytical, Inc.

Analysis

The samples were analyzed for benzene as a target compound and for dimethyl sulfide as a Tentatively Identified Compound (TIC) using the analytical procedures in EPA Method TO-15, *Determination of Volatile Organic Compounds (VOCs) In Air Collected In Specially-Prepared Canisters And Analyzed by Gas Chromatography/Mass Spectrometry (GC/MS).*

Upon receipt, the canister pressures were measured and recorded. The cans were then pressurized and a dilution ratio was calculated for each can (see Canister and Controller Data Sheet).

The Hewlett Packard Model 5890, Gas Chromatograph "Lurch" (S/N 2750A15233) was equipped with a 5971A Mass Selective Detector and a Restek Rxi-624 Sil MS, 60 m x 0.32 mm x 1.8 µm (S/N 1035491) capillary column for these analyses. Both samples and the standards were introduced directly to the analyzer using an Entech 7100A Preconcentrator.

Calibration

The Initial Calibration (***L061515B-TO15***) met 30% RSD criteria. The Initial Calibration Verification met 30% Recovery criteria. The Continuing Calibration Verification met 30% Difference criteria. The calibration data has been included in the calibration curve chromatograms section of this report.

Chromatographic Conditions

The acquisition method ***MM624-L.M*** has been included in the calibration curve chromatograms section of this report.

QC Notes

The associated BFB sample met tune criteria for this analysis.

All Internal Standard response and retention time criteria were met.

The Laboratory Control Sample met 30% Recovery criteria.

Enthalpy Analytical Narrative Summary
(continued)

QC Notes (continued)	Neither benzene nor dimethyl sulfide was present in the analysis of the laboratory Humid Blank at a concentration greater than the MDL. All samples were analyzed within the 30-day holding time specified in the method.
Reporting Notes	The samples were manually searched for the presence of dimethyl sulfide using the primary and secondary ions, 62 and 47. Sample concentrations for dimethyl sulfide were calculated using the response of the extracted primary ion, and a default response factor of 1 (standard for TICs). These analyses met the requirements of the TNI Standard. Any deviations from the requirements of the reference method or TNI Standard have been stated above. The results presented in this report are representative of the samples as provided to the laboratory. The analyses associated with this data report were performed at 2202 Ellis Road, Durham, NC 27703.

Enthalpy Analytical Narrative Summary

Company	Barr Engineering Company
Analyst	DDC
Parameters	EPA Method 18-Type

Client #	25871014.07
Job #	0615-39
# Samples	2 canisters

Custody

Summer Mims of Enthalpy Analytical, Inc. received the samples on 7/3/15 at ambient temperature after being relinquished by Barr Engineering Company of Jefferson City, MO. The samples were received in good condition. Prior to, during, and after analysis, the samples were kept under lock with access only to authorized personnel by Enthalpy Analytical, Inc.

Analysis

The samples were analyzed for methane using the general analytical procedures in EPA Method 18, Measurement of Gaseous Organic Compound Emissions by Gas Chromatography (40 CFR Part 60, Appendix A).

All samples and standards were introduced directly to the column using an automated multi-port Valco gas sampling valve equipped with a stainless steel loop. Methane was referenced to gas phase standards.

Upon receipt, the canister pressures were measured and recorded. The canisters were then pressurized and a dilution ratio was calculated for each (see page 15 of this PDF report).

The Agilent Technologies Model 7890A, Gas Chromatograph ("Edith" CN10722006) was equipped with a Flame Ionization Detector.

Calibration

The calibration curve is located in the Raw Data section of this report and referenced in the Analysis Method column on the Detailed Results page.

For each calibration curve used, the first page of the curve contains all method specific parameters (i.e., curve type, origin, weight, etc.) used to quantify the samples. The calibration curve section also includes a table with the Retention Time (RetTime), Level (Lvl), Amount (corresponding units), Area, Response Factor (Amt/Area) and the analyte Name. The calibration table is used to identify (by retention time) and quantify each target compound.

Chromatographic Conditions

The acquisition method AQ_EDITHP274_HRVOC_LONG.M is included in the Calibration Curve Chromatograms section of this report.

Enthalpy Analytical Narrative Summary
(continued)

QC Notes	The analysis of the laboratory reagent blank did not contain methane at a concentration greater than the MDL.
Reporting Notes	These analytical results are reported on a wet basis. The user of this report should determine the percent moisture in the sample and correct the reported value to ppmvd as appropriate. The results presented in this report are representative of the samples as provided to the laboratory.

General Reporting Notes

The following are general reporting notes that are applicable to all Enthalpy Analytical, Inc. data reports, unless specifically noted otherwise.

- Any analysis which refers to the method as ***"Type"*** represents a planned deviation from the reference method. For instance a Hydrogen Sulfide assay from a Tedlar bag would be labeled as "EPA Method 16-Type" because Tedlar bags are not mentioned as one of the collection options in EPA Method 16.
- The acronym ***MDL*** represents the Minimum Detection Limit. Below this value the laboratory cannot determine the presence of the analyte of interest reliably.
- The acronym ***LOQ*** represents the Limit of Quantification. Below this value the laboratory cannot quantitate the analyte of interest within the criteria of the method.
- The acronym ***ND*** following a value indicates a non-detect or analytical result below the MDL.
- The letter ***J*** in the Qualifier or Flag column in the results indicates that the value is between the MDL and the LOQ. The laboratory can positively identify the analyte of interest as present, but the value should be considered an estimate.
- The letter ***E*** in the Qualifier or Flag column indicates an analytical result exceeding 100% of the highest calibration point. The associated value should be considered as an estimate.
- The acronym ***DF*** represents Dilution Factor. This number represents dilution of the sample during the preparation and/or analysis process. The analytical result taken from a laboratory instrument is multiplied by the DF to determine the final undiluted sample results.
- The addition of ***MS*** to the Sample ID represents a Matrix Spike. An aliquot of an actual sample is spiked with a known amount of analyte so that a percent recovery value can be determined. The MS analysis indicates what effect the sample matrix may have on the target analyte, i.e. whether or not anything in the sample matrix interferes with the analysis of the analyte(s).
- The addition of ***MSD*** to the Sample ID represents a Matrix Spike Duplicate. Prepared in the same manner as a MS, the use of duplicate matrix spikes allows further confirmation of laboratory quality by showing the consistency of results gained by performing the same steps multiple times.
- The addition of ***LD*** to the Sample ID represents a Laboratory Duplicate. The analyst prepares an additional aliquot of sample for testing and the results of the duplicate analysis are compared to the initial result. The result should have a difference value of within 10% of the initial result (if the results of the original analysis are greater than the LOQ).
- The addition of ***AD*** to the Sample ID represents an Alternate Dilution. The analyst prepares an additional aliquot at a different dilution factor (usually double the initial factor). This analysis helps confirm that no additional compound is present and coeluting or sharing absorbance with the analyte of interest, as they would have a different response/absorbance than the analyte of interest.

General Reporting Notes

(continued)

- The Sample ID ***LCS*** represents a Laboratory Control Sample. Clean matrix, similar to the client sample matrix, prepared and analyzed by the laboratory using the same reagents, spiking standards and procedures used for the client samples. The LCS is used to assess the control of the laboratory's analytical system. Whenever spikes are prepared for our client projects, two spikes are retained as LCSs. The LCSs are labeled with the associated project number and kept in-house at the appropriate temperature conditions. When the project samples are received for analysis, the LCSs are analyzed to confirm that the analyte could be recovered from the media, separate from the samples which were used on the project and which may have been affected by source matrix, sample collection and/or sample transport.
- **Significant Figures**: Where the reported value is much greater than unity (1.00) in the units expressed, the number is rounded to a whole number of units, rather than to 3 significant figures. For example, a value of 10,456.45 ug catch is rounded to 10,456 ug. There are five significant digits displayed, but no confidence should be placed on more than two significant digits.
- **Manual Integration**: The data systems used for processing will flag manually integrated peaks with an "M". There are several reasons a peak may be manually integrated. These reasons will be identified by the following two letter designations on sample chromatograms, if provided in the report. The peak was ***not integrated*** by the software **"NI"**, the peak was ***integrated incorrectly*** by the software **"II"** or the ***wrong peak*** was integrated by the software **"WP"**. These codes will accompany the analyst's manual integration stamp placed next to the compound name on the chromatogram.

Sample Custody

Chain of Custody Record

ENTHALPY analytical, inc.

Page 1 of 1

Special Handling:
- [x] Standard Turn Around Time (10 business days)
- [ ] Rush Turn Around Time -- Date Needed_____
- All TATs Subject to Approval by Enthalpy Analytical, Inc.
- All Bag/Can Samples Disposed of 1 Month from Receipt.
- All Other Samples Disposed of 4 Months from Receipt.

For spiked or duplicate samples: please provide sample volumes for recovery calculations. For Particulates: please provide tare weights and/or condensed water volumes.

Client Name: Barr Engineering
Project Manager: Ed Galbraith
Report To: Ed Galbraith

Project Number: 25871014.07
Site Name: Bridgeton Landfill
Location: Bridgeton, MO

PO#:
Telephone#: 573-638-5000
Email: EGalbraith.com

Special Instructions:

A=Air 1=H2SO4 2=NaOH W=Water O=Other
X=XAD C=Charcoal SG=Silica Gel
G=Grab C=Composite Q=Quality Control O=Other

Sample ID	Date	Time	Sample Volume	Type	Matrix	# of VOA Vials	# of Glass	# of Plastic	# of Bags	# of Canisters	# of Tubes	# Other	Benzene	Dimethyl sulfide	Ammonia	Methane					Notes:
LS10888	6/30/15	9:00-5:00	6L	G	A					1			x	x	x	x					Can 00016
VC 3211	↓	"	6L	G	A					1			x	x	x	x					Can 14331
LS 5685603024	↓	11:00-12:00	800ml/min	G	SG						1				x						
LS 5685603018	↓	3:00-4:00	↓	G	SG						1				x						
VC 5685603023	↓	11:00-12:00	↓	G	SG						1				x						
VC 5685603026	↓	3:00-4:00	↓	G	SG						1				x						

Relinquished By:	Date:	Received By:	Date:	Time:	Sample Condition Upon Receipt:
Erica Weller/Barr via FedEx	7-1-15	[signature]	7-3-15	830	[x] Iced [x] Ambient [ ] °C_____
					[ ] Iced [ ] Ambient [ ] °C_____
					[ ] Iced [ ] Ambient [ ] °C_____

800-1 Capitola Drive • Durham, NC 27713 • (919) 850-4392 • FAX (919) 850-9012 • www.enthalpy.com

Bm

Doug Mendoza

Bridgeton Landfill

From: Ed Galbraith <EGalbraith@barr.com>
Sent: Monday, October 12, 2015 9:00 AM
To: John Lodderhose; Rob G Daly
Cc: Doug Mendoza; Mark Bright; Michael Grace; 'Kamp, Kevin'; 'bpower@republicservices.com'; 'Bouchard, Derek (DBouchard@republicservices.com)'; 'Koziatek, Dan'; Ethan R. Voyles; William C. Selby; 'LaFata, Natalie'; Ed Galbraith
Subject: Report of Sampling
Attachments: Air sampling memo_0630_0907 Final.pdf

Attached is the most recent Technical Memorandum for air sampling at PS-1 This report covers both the 6/30/2015 and 9/2/2015 sampling events. I will send the Enthalpy lab reports under separate emails to meet MSD's size restrictions.

Rob, would you let me that everything gets through. Thanks, I appreciate it.

Ed Galbraith

Senior Environmental Consultant
Jefferson City, MO office: 573.638.5024
cell: 573.418.5562
egalbraith@barr.com
www.barr.com

resourceful. naturally. BARR

resourceful. naturally.
engineering and environmental consultants

BARR

Technical Memorandum

To: Brian Powers, Bridgeton Landfill
From: Ed Galbraith, Barr Engineering Co.
Subject: Air Sampling Results at PS1
Date: October 8, 2015
c: Derek Bouchard, Kevin Kamp, Dan Koziatek

Background

This memo is an update on air monitoring at the Bridgeton Landfill lift station (LS)/bypass valve chamber (VC) (PS1) as outlined in the *PS-1 Sampling and Analytical Plan*. Barr Engineering Co. conducted the fourth and fifth canister sampling on June 30, 2015 and September 3, 2015, respectively. Bridgeton Landfill staff has been collecting field monitoring data as required by the plan.

Revisions to the PS-1 sampling plan were approved by the Metropolitan St. Louis Sewer District (MSD) on August 25, 2015, and the revised plan was submitted September 1, 2015. The revisions included changing the canister sampling to have the doors to PS-1 remain open during the sampling and reducing the field instrument readings to once every two weeks until the new planned ventilation system is in place.

This memo transmits table results of all canister monitoring and field results through September 30, 2015 and an update on the sampling events on June 30, 2015 and September 3, 2015.

Canister Sampling

Barr personnel conducted sampling on June 30, 2015 and September 3, 2015. The June 30 sampling employed a closed door sampling condition, and the September 3 sampling was open door, consistent with the plan modifications discussed above. There were no significant deviations from the approved sampling plan. For each event, two summa canisters each with an 8-hour regulator were deployed; one in the LS and one in the VC. Laboratory analytical reports from Enthalpy Analytical are attached, and the results are summarized in Table 1. Any quality control issues are noted in Table 1 or discussed in the report narrative summaries. All results were below worker protection levels.

To date, Bridgeton Landfill has completed five canister events with no exceedances of worker protection levels.

Field Meter Sampling

Bridgeton Landfill has completed about 31 weeks of sampling using field instruments. There have been occasional minor excursions of action levels as discussed below.

Benzene

The benzene RAE-SEP field meter results on April 11, 2015 indicated 1.1 ppm in the LS and 0.85 ppm in the VC. The sample was taken during an extended period of vacuum interruption because of operational issues with an extraction sump. At the time of the sample, there was zero negative vacuum as indicated by the vacuum system meter. Since this time, a redundant tie-in with a second portion of the gas system has been completed. Additionally, an expansion of the gas header system is currently being installed. When combined, these two improvements will ensure both redundancy of operation and greater volume of operation.

After the April 11, 2015 reading, both doors were opened and the wet well was allowed to vent passively for approximately three hours. Since then, all field readings for benzene have been zero or well below worker protection levels. This includes multiple samples taken in the following week and during vacuum interruption for the redundant tie-in. Field samples continue to be taken when the doors have been closed for at least 24 hours prior. Subsequent non-detection of benzene during vacuum interruptions indicates that the presence of benzene on April 11, 2015 may have been residual accumulation prior to LS construction completion and that migration is no longer possible after final sealing of the wet well was completed.

Oxygen

Low oxygen readings ranging from 17.3 percent to 19.4 percent O_2 have been noted on 7 out of 84 samples. All readings were taken when the doors were closed for at least 24 hours prior to taking the sample and remained closed while the sample was taken. After the first reading on April 29, 2015, the doors were opened to deploy the canisters, and subsequent oxygen levels taken that day were all above the action level of 19.5 percent O_2.

LEL

On June 30, 2015, one of the eight LEL readings was recorded as 10 percent LEL; however, we believe that equipment malfunction contributed to a false reading. Field staff employed two MX4 four-gas meters. For the first set of readings, one MX4 was used in the LS and the other in the VC. The MX4 in the LS was fluctuating significantly between 3 and 16 percent LEL while the MX4 in the VC was more stable with readings between 2 and 4 percent LEL. Staff recorded a 10 percent LEL for the LS and 3 percent LEL for the VC. Staff then exposed both units to ambient air and observed that the MX4 that was used to record the LS reading continued to fluctuate between 0 and 10 percent LEL while the other unit displayed 0-1 percent LEL. For the six remaining tests, both units were employed in both the PS and the VC. The one unit continued to fluctuate significantly, so readings were recorded from the more stable unit. Those readings ranged from 2-4 percent LEL.

Summary

The data indicates that conditions are protective of worker safety and the only exceptions have been under conditions that are not representative of actual worker exposure. In cases where the doors are opened to deploy the canisters and then closed for 8 hours, the data indicate that levels within the chamber remain at protective levels. Further, exceptional readings occurred only with direct-read field instruments utilizing filtering media, which are a less discerning and more error-prone methodology than the laboratory analytical.

If you have any questions, feel free to contact me at 573-638-5024.

Attachments

- Air Sampling Data 10052015
- Enthalpy Lab Report 0615-39
- Enthalpy Lab Report 0715-211

Table 1
Bridgeton Landfill PS-1 Air Data

				Parameter	Carbon Monoxide	Hydrogen Sulfide	Oxygen	LEL (CH4)	Benzene	Total VOC	Dimethyl Sulfide	Ammonia	Methane (CH4)
				Action Level	> 25 ppm	> 10 ppm	< 19.5 %	> 10 %					
				ACGIH TLV-TWA (ppm)					0.5		10	25	
				ACGIH TLV-TWA (ug/m3)					1600		25000	17000	
Location	Date	Lab Name	Data Status	Lab Report Number									
LS	9/30/2015	Field	No QC	Field	0 ppm	0 ppm	20.9%	0.0%	–	–	–	–	–
VC	9/30/2015	Field	No QC	Field	0 ppm	0 ppm	20.9%	0.0%	–	–	–	–	–
LS	9/18/2015	Field	No QC	Field	0 ppm	0 ppm	20.9%	0.0%	–	–	–	–	–
VC	9/18/2015	Field	No QC	Field	0 ppm	0 ppm	20.9%	0.0%	–	–	–	–	–
LS	9/3/2015	Field	No QC	Field	0 ppm	0.2 ppm	20.7%	0.0%	–	–	–	–	–
VC	9/3/2015	Field	No QC	Field	0 ppm	0 ppm	20.9%	0.0%	–	–	–	–	–
LS	9/3/2015	Field	No QC	Field	0 ppm	0 ppm	20.7%	0.0%	–	–	–	–	–
VC	9/3/2015	Field	No QC	Field	0 ppm	0 ppm	20.7%	0.0%	–	–	–	–	–
LS	9/3/2015	Field	No QC	Field	0 ppm	0 ppm	20.5%	0.0%	–	–	–	–	–
VC	9/3/2015	Field	No QC	Field	0 ppm	0 ppm	20.6%	0.0%	–	–	–	–	–
LS	9/3/2015	Field	No QC	Field	0 ppm	0.3 ppm	20.5%	0.0%	–	–	–	–	–
VC	9/3/2015	Field	No QC	Field	0 ppm	0.3 ppm	20.6%	0.0%	–	–	–	–	–
LS	9/3/2015	Field	No QC	Field	0 ppm	0 ppm	17.3%	0.0%	–	–	–	–	–
VC	9/3/2015	Field	No QC	Field	0 ppm	0 ppm	20.9%	0.0%	–	–	–	–	–
LS	8/21/2015	Field	No QC	Field	0 ppm	0 ppm	20.8%	0.0%	–	–	–	–	–
VC	8/21/2015	Field	No QC	Field	0 ppm	0 ppm	20.8%	0.0%	–	–	–	–	–
LS	8/14/2015	Field	No QC	Field	0 ppm	0 ppm	22.1%	0.0%	–	–	–	–	–
VC	8/14/2015	Field	No QC	Field	0 ppm	0 ppm	22.1%	0.0%	–	–	–	–	–
LS	8/7/2015	Field	No QC	Field	0 ppm	0 ppm	21.5%	0.0%	–	–	–	–	–
VC	8/7/2015	Field	No QC	Field	0 ppm	0 ppm	21.5%	0.0%	–	–	–	–	–
LS	7/29/2015	Field	No QC	Field	0 ppm	0 ppm	20.9%	0.0%	–	–	–	–	–
VC	7/29/2015	Field	No QC	Field	0 ppm	0 ppm	20.9%	0.0%	–	–	–	–	–
LS	7/22/2015	Field	No QC	Field	0 ppm	0 ppm	22.3%	0.0%	–	–	–	–	–
VC	7/22/2015	Field	No QC	Field	0 ppm	0 ppm	22.3%	0.0%	–	–	–	–	–
LS	7/15/2015	Field	No QC	Field	0 ppm	0 ppm	21.2%	0.0%	–	–	–	–	–
VC	7/15/2015	Field	No QC	Field	0 ppm	0 ppm	21.2%	0.0%	–	–	–	–	–
LS	6/30/2015	Field	No QC	Field	0 ppm	0 ppm	20.8%	3%	–	–	–	–	–
VC	6/30/2015	Field	No QC	Field	0 ppm	0 ppm	20.8%	3%	–	–	–	–	–
LS	6/30/2015	Field	No QC	Field	0 ppm	0 ppm	20.8%	3%	–	–	–	–	–
VC	6/30/2015	Field	No QC	Field	0 ppm	0 ppm	20.8%	2%	–	–	–	–	–
LS	6/30/2015	Field	No QC	Field	0 ppm	0 ppm	20.9%	4%	–	–	–	–	–
VC	6/30/2015	Field	No QC	Field	0 ppm	0 ppm	20.9%	2%	–	–	–	–	–
LS	6/30/2015	Field	No QC	Field	0 ppm	0.3 ppm	20.4%	10% BQS	–	–	–	–	–
VC	6/30/2015	Field	No QC	Field	0 ppm	0 ppm	20.6%	3%	–	–	–	–	–
LS	6/29/2015	Field	No QC	Field	0.0 ppm	0.0 ppm	20.9%	0.0%	0.0 ppm	–	–	–	–
VC	6/29/2015	Field	No QC	Field	0.0 ppm	0.0 ppm	20.9%	0.0%	0.0 ppm	–	–	–	–
LS	6/25/2015	Field	No QC	Field	0.0 ppm	0.0 ppm	19.4%	0.0%	0.05 ppm	–	–	–	–
VC	6/25/2015	Field	No QC	Field	0.0 ppm	0.0 ppm	20.2%	0.0%	0.0 ppm	–	–	–	–
LS	6/18/2015	Field	No QC	Field	0.0 ppm	0.0 ppm	20.9%	0.0%	0.0 ppm	–	–	–	–
VC	6/18/2015	Field	No QC	Field	0.0 ppm	0.0 ppm	20.9%	0.0%	0.0 ppm	–	–	–	–
LS	6/11/2015	Field	No QC	Field	0.0 ppm	0.0 ppm	18.5%	0.0%	0.0 ppm	–	–	–	–
VC	6/11/2015	Field	No QC	Field	0.0 ppm	0.0 ppm	19.7%	0.0%	0.0 ppm	–	–	–	–
LS	6/3/2015	Field	No QC	Field	0.0 ppm	0.0 ppm	19.0%	0.0%	0.0 ppm	–	–	–	–
VC	6/3/2015	Field	No QC	Field	0.0 ppm	0.0 ppm	20.1%	0.0%	0.0 ppm	–	–	–	–
LS	5/28/2015	Field	No QC	Field	0 ppm	0 ppm	20.4%	5%	–	–	–	–	–
VC	5/28/2015	Field	No QC	Field	0 ppm	0 ppm	20.9%	1%	–	–	–	–	–
LS	5/28/2015	Field	No QC	Field	0 ppm	0 ppm	20.9%	2%	–	–	–	–	–
VC	5/28/2015	Field	No QC	Field	0 ppm	0 ppm	20.9%	1%	–	–	–	–	–
LS	5/28/2015	Field	No QC	Field	0 ppm	0 ppm	20.5%	4%	–	–	–	–	–
VC	5/28/2015	Field	No QC	Field	0 ppm	0 ppm	20.9%	1%	–	–	–	–	–
LS	5/28/2015	Field	No QC	Field	0 ppm	0 ppm	20.2%	2%	–	–	–	–	–
VC	5/28/2015	Field	No QC	Field	0 ppm	0 ppm	20.8%	0%	–	–	–	–	–
LS	5/28/2015	Field	No QC	Field	0 ppm	0.2 ppm	20.8%	0%	–	–	–	–	–
VC	5/28/2015	Field	No QC	Field	0 ppm	0 ppm	20.9%	0%	–	–	–	–	–
LS	5/28/2015	Field	No QC	Field	–	–	–	–	0 ppm	–	–	–	–
VC	5/28/2015	Field	No QC	Field	–	–	–	–	0 ppm	–	–	–	–

MSD 033440

Table 1
Bridgeton Landfill PS-1 Air Data

				Parameter	Carbon Monoxide	Hydrogen Sulfide	Oxygen	LEL (CH4)	Benzene	Total VOC	Dimethyl Sulfide	Ammonia	Methane (CH4)
				Action Level	> 25 ppm	> 10 ppm	< 19.5 %	> 10 %					
				ACGIH TLV-TWA (ppm)					0.5		10	25	
				ACGIH TLV-TWA (ug/m3)					1600		25000	17000	
Location	Date	Lab Name	Data Status	Lab Report Number									
LS	5/20/2015	Field	No QC	Field	0.0 ppm	0.0 ppm	19.0%	0.0%	0.0 ppm	–	–	–	–
VC	5/20/2015	Field	No QC	Field	0.0 ppm	0.0 ppm	20.1%	0.0%	0.0 ppm	–	–	–	–
LS	5/13/2015	Field	No QC	Field	8.0 ppm	0 ppm	18.7%	3.0%	0 ppm	–	–	–	–
VC	5/13/2015	Field	No QC	Field	2.0 ppm	0 ppm	19.8%	0%	0 ppm	–	–	–	–
LS	5/6/2015	Field	No QC	Field	5.0 ppm	0.5 ppm	20.9%	0%	0 ppm	–	–	–	–
VC	5/6/2015	Field	No QC	Field	1.0 ppm	0 ppm	21.0%	0%	0 ppm	–	–	–	–
LS	4/29/2015	Field	No QC	Field	8 ppm	0 ppm	20.9%	0%	–	–	–	–	–
VC	4/29/2015	Field	No QC	Field	0 ppm	0 ppm	21.0%	0%	–	–	–	–	–
LS	4/29/2015	Field	No QC	Field	0 ppm	0 ppm	20.9%	2%	–	–	–	–	–
VC	4/29/2015	Field	No QC	Field	0 ppm	0 ppm	20.8%	0%	–	–	–	–	–
LS	4/29/2015	Field	No QC	Field	1 ppm	0 ppm	18.7%	0%	0 ppm	–	–	–	–
VC	4/29/2015	Field	No QC	Field	0 ppm	0 ppm	20.9%	0%	–	–	–	–	–
LS	4/29/2015	Field	No QC	Field	0 ppm	0 ppm	20.7%	1%	–	–	–	–	–
VC	4/29/2015	Field	No QC	Field	0 ppm	0 ppm	21.0%	0%	–	–	–	–	–
LS	4/22/2015	Field	No QC	Field	0.0 ppm	0.0 ppm	21.0%	0.0%	0.0 ppm	–	–	–	–
VC	4/22/2015	Field	No QC	Field	0.0 ppm	0.0 ppm	21.0%	0.0%	0.0 ppm	–	–	–	–
LS	4/21/2015	Field	No QC	Field	0.0 ppm	0.0 ppm	20.9%	0.0%	0.0 ppm	–	–	–	–
VC	4/21/2015	Field	No QC	Field	0.0 ppm	0.0 ppm	20.9%	0.0%	0.0 ppm	–	–	–	–
LS	4/20/2015	Field	No QC	Field	0.0 ppm	0.0 ppm	20.8%	0.0%	0.0 ppm	–	–	–	–
VC	4/20/2015	Field	No QC	Field	0.0 ppm	0.0 ppm	20.8%	0.0%	0.0 ppm	–	–	–	–
LS	4/17/2015	Field	No QC	Field	0.0 ppm	0.0 ppm	20.5%	0.0%	0.0 ppm	–	–	–	–
VC	4/17/2015	Field	No QC	Field	0.0 ppm	0.0 ppm	20.5%	0.0%	0.0 ppm	–	–	–	–
LS	4/16/2015	Field	No QC	Field	0.0 ppm	0.0 ppm	20.7%	0.0%	0.0 ppm	–	–	–	–
VC	4/16/2015	Field	No QC	Field	0.0 ppm	0.0 ppm	20.7%	0.0%	0.0 ppm	–	–	–	–
LS	4/15/2015	Field	No QC	Field	0.0 ppm	0.5 ppm	20.5%	0.0%	0.0 ppm	–	–	–	–
VC	4/15/2015	Field	No QC	Field	0.0 ppm	0.0 ppm	20.5%	0.0%	0.0 ppm	–	–	–	–
LS	4/14/2015	Field	No QC	Field	0.0 ppm	0.0 ppm	20.9%	0.0%	0.0 ppm	–	–	–	–
VC	4/14/2015	Field	No QC	Field	0.0 ppm	0.0 ppm	20.9%	0.0%	0.0 ppm	–	–	–	–
LS	4/11/2015	Field	No QC	Field	0.0 ppm	0.0 ppm	21.0%	0.0%	1.1 ppm	–	–	–	–
VC	4/11/2015	Field	No QC	Field	0.0 ppm	0.0 ppm	21.0%	0.0%	0.85 ppm	–	–	–	–
LS	4/2/2015	Field	No QC	Field	0.0 ppm	0.0 ppm	21.0%	0.0%	0.0 ppm	–	–	–	–
VC	4/2/2015	Field	No QC	Field	0.0 ppm	0.0 ppm	21.0%	0.0%	0.0 ppm	–	–	–	–
LS	2/13/2015	Field	No QC	Field	–	–	–	–	–	1.25 ppm	–	–	–
VC	2/13/2015	Field	No QC	Field	–	–	–	–	–	0.65 ppm	–	–	–
LS	2/13/2015	Field	No QC	Field	–	–	–	–	–	0.82 ppm	–	–	–
VC	2/13/2015	Field	No QC	Field	–	–	–	–	–	1.1 ppm	–	–	–
LS	2/13/2015	Field	No QC	Field	–	–	–	–	–	0.0 ppm	–	–	–
VC	2/13/2015	Field	No QC	Field	–	–	–	–	–	1.45 ppm	–	–	–
LS	2/12/2015	Field	No QC	Field	–	–	–	–	0.0 ppm	–	–	–	–
LS	2/11/2015	Field	No QC	Field	–	–	–	–	0.0 ppm	–	–	–	–
							CANISTER RESULTS						
LS1583	9/3/2015	Enthalpy Anal.	Validated	0715-211	–	–	–	–	9.97 ug/m3	–	194 ug/m3 TIC	–	57.7 ppm
LS5685602993	9/3/2015	Enthalpy Anal.	Validated	0715-211	–	–	–	–	–	–	–	131 ug/m3	–
LS5685602995	9/3/2015	Enthalpy Anal.	Validated	0715-211	–	–	–	–	–	–	–	5063 ug/m3	–
VC1446	9/3/2015	Enthalpy Anal.	Validated	0715-211	–	–	–	–	1.44 ug/m3	–	0.410 ug/m3 TIC	–	2.56 j ppm
VC5685602988	9/3/2015	Enthalpy Anal.	Validated	0715-211	–	–	–	–	–	–	–	7 j ug/m3	–
VC5685602991	9/3/2015	Enthalpy Anal.	Validated	0715-211	–	–	–	–	–	–	–	12 j ug/m3	–
LS10888	6/30/2015	Enthalpy Anal.	Validated	0615-39	–	–	–	–	859 ug/m3	–	5327 ug/m3 TIC	–	5728 ppm
LS5685603018	6/30/2015	Enthalpy Anal.	Validated	0615-39	–	–	–	–	–	–	–	6159 ug/m3	–
LS5685603024	6/30/2015	Enthalpy Anal.	Validated	0615-39	–	–	–	–	–	–	–	9518 ug/m3	–
VC3211	6/30/2015	Enthalpy Anal.	Validated	0615-39	–	–	–	–	47.8 ug/m3	–	30.6 ug/m3 TIC	–	8.70 j ppm
VC5685603023	6/30/2015	Enthalpy Anal.	Validated	0615-39	–	–	–	–	–	–	–	205 ug/m3	–
VC5685603026	6/30/2015	Enthalpy Anal.	Validated	0615-39	–	–	–	–	–	–	–	85 j ug/m3	–
LS 4038	5/28/2015	Enthalpy Anal.	Validated	0515-31	–	–	–	–	170 ug/m3	–	1044 ug/m3 TIC	–	308 ppm
LS5685603022	5/28/2015	Enthalpy Anal.	Validated	0515-31	–	–	–	–	–	–	–	11.7 jb ug/m3	–
LS5685603025	5/28/2015	Enthalpy Anal.	Validated	0515-31	–	–	–	–	–	–	–	424 j ug/m3	–

MSD 033441

Table 1
Bridgeton Landfill PS-1 Air Data

				Parameter	Carbon Monoxide	Hydrogen Sulfide	Oxygen	LEL (CH4)	Benzene	Total VOC	Dimethyl Sulfide	Ammonia	Methane (CH4)
				Action Level	> 25 ppm	> 10 ppm	< 19.5 %	> 10 %					
				ACGIH TLV-TWA (ppm)					0.5		10	25	
				ACGIH TLV-TWA (ug/m3)					1600		25000	17000	
Location	Date	Lab Name	Data Status	Lab Report Number									
VC 3977	5/28/2015	Enthalpy Anal.	Validated	0515-31	--	--	--	--	6.57 ug/m3	--	22.4 ug/m3 TIC	--	1.94 j ppm
VC5685603017	5/28/2015	Enthalpy Anal.	Validated	0515-31	--	--	--	--	--	--	--	< 4.90 ug/m3	--
VC5685603019	5/28/2015	Enthalpy Anal.	Validated	0515-31	--	--	--	--	--	--	--	< 4.90 ug/m3	--
LS5356301860	4/29/2015	Enthalpy Anal.	Validated	0415-06	--	--	--	--	--	--	--	< 4.90 ug/m3	--
VC5356301660	4/29/2015	Enthalpy Anal.	Validated	0415-06	--	--	--	--	--	--	--	7.10 jb ug/m3	--
LS5356301661	4/29/2015	Enthalpy Anal.	Validated	0415-06	--	--	--	--	--	--	--	19.6 jb ug/m3	--
VC5356301862	4/29/2015	Enthalpy Anal.	Validated	0415-06	--	--	--	--	--	--	--	27.1 jb ug/m3	--
LS 4036	4/29/2015	Enthalpy Anal.	Validated	0415-06	--	--	--	--	525 ug/m3	--	2596 ug/m3 TIC	--	581 ppm
VC 4028	4/29/2015	Enthalpy Anal.	Validated	0415-06	--	--	--	--	338 ug/m3	--	253 ug/m3 TIC	--	90.4 ppm
LS 5356301856	3/27/2015	Enthalpy Anal.	Validated	0315-18	--	--	--	--	--	--	--	< 4.90 ug/m3	--
VC 5356301861	3/27/2015	Enthalpy Anal.	Validated	0315-18	--	--	--	--	--	--	--	< 4.90 ug/m3	--
LS 5356301858	3/27/2015	Enthalpy Anal.	Validated	0315-18	--	--	--	--	--	--	--	< 4.90 ug/m3	--
VC 5356301857	3/27/2015	Enthalpy Anal.	Validated	0315-18	--	--	--	--	--	--	--	< 4.90 ug/m3	--
VC 4014	3/27/2015	Enthalpy Anal.	Validated	0315-18	--	--	--	--	52.2 ug/m3	--	0.770 ug/m3 TIC	--	411 ppm
LS 4009	3/27/2015	Enthalpy Anal.	Validated	0315-18	--	--	--	--	72.9 ug/m3	--	1031 ug/m3 TIC	--	202 ppm
LS 1-2'	2/13/2015	Enthalpy Anal.	Validated	0215-55	--	--	--	--	22.6 ** ug/m3	--	ND ** TIC	--	--
VC 1-8'	2/13/2015	Enthalpy Anal.	Validated	0215-55	--	--	--	--	21.2 ug/m3	--	ND TIC	--	--

MSD 033442

Table 2
Ammonia Concentration Calculation

				Parameter	Ammonia (ug)	Ammonia (ug) Values	Sample rate (cc)	Sample time	Ammonia (ug/m3)
				Action Level					
				ACGIH TLV-TWA (ppm)					25
				ACGIH TLV-TWA (ug/m3)					17000
Location	Date	Lab Name	Data Status	Lab Report Number					
LS5685603025	5/28/2015	Enthalpy Anal.	Validated	0515-31	20.3 ug j	20.3	800	60	422.9
VC5685603019	5/28/2015	Enthalpy Anal.	Validated	0515-31	< 0.235 ug	0.235	800	60	4.9
LS5685603022	5/28/2015	Enthalpy Anal.	Validated	0515-31	0.562 ug j	0.562	800	60	11.7
VC5685603017	5/28/2015	Enthalpy Anal.	Validated	0515-31	< 0.235 ug	0.235	800	60	4.9
LS5356301860	4/29/2015	Enthalpy Anal.	Validated	0415-06	< 0.235 ug	0.235	800	60	4.9
VC5356301660	4/29/2015	Enthalpy Anal.	Validated	0415-06	0.341 jb ug	0.341	800	60	7.1
LS5356301661	4/29/2015	Enthalpy Anal.	Validated	0415-06	0.940 jb ug	0.94	800	60	19.6
VC5356301862	4/29/2015	Enthalpy Anal.	Validated	0415-06	1.30 jb ug	1.3	800	60	27.1
LS 5356301856	3/27/2015	Enthalpy Anal.	Validated	0315-18	< 0.235 ug	0.235	800	60	4.9
VC 5356301861	3/27/2015	Enthalpy Anal.	Validated	0315-18	< 0.235 ug	0.235	800	60	4.9
LS 5356301858	3/27/2015	Enthalpy Anal.	Validated	0315-18	< 0.235 ug	0.235	800	60	4.9
VC 5356301857	3/27/2015	Enthalpy Anal.	Validated	0315-18	< 0.235 ug	0.235	800	60	4.9
LS5685603024	6/30/2015	Enthalpy Anal.	Validated	0615-39	221 ug	221	387	60	9517.7
VC5685603023	6/30/2015	Enthalpy Anal.	Validated	0615-39	4.75 ug	4.75	387	60	204.6
LS5685603018	6/30/2015	Enthalpy Anal.	Validated	0615-39	143 ug	143	387	60	6158.5
VC5685603026	6/30/2015	Enthalpy Anal.	Validated	0615-39	1.97j ug	1.97	387	60	84.8
LS5685602995	9/3/2015	Enthalpy Anal.	Validated	0715-211	243 ug	243	800	60	5062.5
VC5685602991	9/3/2015	Enthalpy Anal.	Validated	0715-211	0.575 j ug	0.575	800	60	12.0
LS5685602993	9/3/2015	Enthalpy Anal.	Validated	0715-211	6.28 ug	6.28	800	60	130.8
VC5685602988	9/3/2015	Enthalpy Anal.	Validated	0715-211	0.324 j ug	0.324	800	60	6.8

Sample rate	800	387	cc/min
Sample time	60	60	min
Total volume	48000	23220	cc
Total volume	0.048	0.023	m^3

MSD 033443

Table 3
Dimethyl Sulfide Conversion

				Parameter	Dimethyl Sulfide		
				ACGIH TLV-TWA (ppm)	10		
				ACGIH TLV-TWA (ug/m3)	25000		
Location	Date	Lab Name	Data Status	Lab Report Number	ppbv	ug/m3	Method
LS1583	9/3/2015	Enthalpy Anal.	Validated	0715-211	76.7	194	TIC
VC1446	9/3/2015	Enthalpy Anal.	Validated	0715-211	0.162	0.41	TIC
LS10888	6/30/2015	Enthalpy Anal.	Validated	0615-39	2103	5327	TIC
VC3211	6/30/2015	Enthalpy Anal.	Validated	0615-39	12.1	30.6	TIC
VC 3977	5/28/2015	Enthalpy Anal.	Validated	0515-31	8.86	22.4	TIC
LS 4038	5/28/2015	Enthalpy Anal.	Validated	0515-31	412	1044	TIC
LS 4036	4/29/2015	Enthalpy Anal.	Validated	0415-06	1025	2596	TIC
VC 4028	4/29/2015	Enthalpy Anal.	Validated	0415-06	100	253	TIC
VC 4014	3/27/2015	Enthalpy Anal.	Validated	0315-18	0.304	0.77	TIC
LS 4009	3/27/2015	Enthalpy Anal.	Validated	0315-18	407	1031	TIC
LS 1-2'	2/13/2015	Enthalpy Anal.	Validated	0215-55		ND	TIC
VC 1-8'	2/13/2015	Enthalpy Anal.	Validated	0215-55		ND	TIC

ppbv = 2.533 ug/m3
molecular weight = 62.02

Data Qualifiers/Footnotes	
Qualifier	**Definition**
--	Not analyzed/not available.
a	Estimated value, calculated using some or all values that are estimates.
b	Potential false positive value based on blank data validation procedures.
c	Coeluting compound.
e	Estimated value, exceeded the instrument calibration range.
f	Sample was collected at a flowrate exceeding the recommended rate of 200 mL/minute.
h	EPA recommended sample preservation, extraction or analysis holding time was exceeded.
i	Indeterminate value based on failure of blind duplicate data to meet quality assurance criteria.
j	Reported value is less than the stated laboratory quantitation limit and is considered an estimated value.
p	Relative percent difference is >40% (25% CLP pesticides) between primary and confirmation GC columns.
pp	Small peak in chromatogram below method detection limit.
r	The presence of the compound is suspect based on the ID criteria of the retention time and relative retention time obtained from the examination of the chromatograms.
s	Potential false positive value based on statistical analysis of blank sample data.
t	Sample positive for total coliforms but negative for *E. coli*.
v	Sample was collected under a vacuum of greater than XX inches of mercury.
*	Estimated value, QA/QC criteria not met.
**	Unusable value, QA/QC criteria not met.
N	Sample Type: Normal
FD	Sample Type: Field Duplicate
AT	Sample chromatogram is noted to be atypical of a petroleum product.
DLND	Not detected, detection limit not determined.
DF	Did not flash
EMPC	Estimated maximum possible concentration.
NA – (Not applicable)	NA indicates that a fractional portion of the sample is not part of the analytical testing or field collection procedures.
ND	Not detected.
TIC	Tentatively identified compound
BQA	Barr-applied project specific qualifier: extraction and/or analyses conducted using an alternative method and/or procedure.
BQC	Barr-applied project specific qualifier: plant shut down.
BQD	Barr-applied project specific qualifier: equipment malfunction.
BQE	Barr-applied project specific qualifier: equipment adjustment.
BQM	Barr-applied project specific qualifier: manual measurement.
BQN	Barr-applied project specific qualifier: unable to be sampled or measured due to various reasons.
BQP	Barr-applied project specific qualifier: atypical chromatographic pattern.
BQQ	Barr-applied project specific qualifier: some aspect of QA/QC was not met.
BQR	Barr-applied project specific qualifier: location was re-sampled.
BQS	Barr-applied project specific qualifier: data is considered suspect.
BQT	Barr-applied project specific qualifier: summed value not displayed due to insufficient field length.
BQU	Barr-applied project specific qualifier: historical qualifier - definition unknown.
BQV	Barr-applied project specific qualifier: estimated value.
BQX	Barr-applied project specific qualifier: see notes for qualifier definition.
BQZ	Barr-applied project specific qualifier: data is considered unusable.
Validated	Laboratory data has been evaluated following Barr QA/QC procedures and/or project-specific data review requirements. Field data has been verified for transcription errors, consistency and completeness. Data transferred from the previous database (9/2009) were categorized as validated, but may be comprised of any one of the following data status categories: Validated, SSource, No QC or Legacy.
No QC	Laboratory data has been excluded from Barr QA/QC procedures.
SSource	Laboratory and/or field data obtained from a secondary source external to Barr. Second source QA/QC evaluation procedures may or may not have been performed beyond the original data generator.
Legacy	Historical laboratory data (internal at Barr). QA/QC evaluation procedures may or may not have been performed beyond the original data generator

Doug Mendoza

Bridgeton Landfill

From: LaFata, Natalie <nlafata@cecinc.com>
Sent: Friday, October 09, 2015 4:45 PM
To: Doug Mendoza; Brian G. Gibson; John Lodderhose
Cc: Brian Power; Kamp, Kevin; O'Leary, Kevin; Kohrt, Mark; Graves, Stephen
Subject: Hauling on Monday

This is just an FYI that we will be hauling water on Monday during regular business hours at the MSD haul station. There were 2 pumps on the same tank that had blown their seals on Friday morning. We need to lower that tanks level as far as possible, as soon as possible in order to be able to repair them.
I will have more to update as the weekend continues.
If you have any questions please feel free to contact me.

Natalie L. La Fata / Plant Manager
Civil & Environmental Consultants, Inc.
Mobile: (314) 341-3375 · http://www.cecinc.com
Sent from my iPhone

Doug Mendoza

Bridgeton Landfill

From: LaFata, Natalie <nlafata@cecinc.com>
Sent: Friday, October 09, 2015 11:49 AM
To: Rob G Daly; Mark Bright; Mike Waxman; Doug Mendoza; Jeff Jones; Kevin George
Cc: O'Leary, Kevin; Graves, Stephen; Kamp, Kevin; Kohrt, Mark
Subject: Plant Update 10-9-2015

The plant discharge is averaging 200+ GPM as of Thursday 9-8-2015. Due to issues at the pump stations throughout the force main, the flow was reduced prior to that throughout the week. The average discharge amounts since the last Force Main/Plant Update:

Date	Direct Discharge (gallons)
10/1/2015	259,517
10/2/2015	183,961
10/3/2015	142,965
10/4/2015	139,365
10/5/2015	98,609
10/6/2015	130,087

- When odors were checked at the force main, no odors were detected and H2S readings were 0.0ppm at the pump stations.
- Sodium Nitrate dosing is at 400gpd and Ferric Chloride is being introduced to the discharge manhole 013 at 0.6-1.5gph at this time.

Any questions, please feel free to contact me!

Have a great weekend!!

Natalie L. La Fata / Plant Manager
Civil & Environmental Consultants, Inc.
4848 Park 370 Blvd., Suite F · Hazelwood, MO 63042
Toll Free: (866) 250-3679 ext. 3626 · Fax: (314) 656-4595
Mobile: (314) 341-3375 · http://www.cecinc.com
Senior Leadership · Integrated Services · Personal Business Relationships

This electronic communication and any attachments are intended solely for the use of the person or entity to which it is addressed, and may contain information that is confidential, privileged and exempt from disclosure under applicable law, including copyright law. If you are not the intended recipient of this message, you are prohibited from disclosing, reproducing, distributing, disseminating or otherwise using this transmission. Please promptly notify the sender by reply electronic communication and immediately delete this message from your system.

Doug Mendoza Bridgeton Landfill

From: Ed Galbraith <EGalbraith@barr.com>
Sent: Thursday, October 08, 2015 10:28 AM
To: Rob G Daly; John Lodderhose
Cc: Doug Mendoza; Mark Bright; Michael Grace; 'Kamp, Kevin'; 'bpower@republicservices.com'; 'Bouchard, Derek (DBouchard@republicservices.com)'; 'Koziatek, Dan'; Ethan R. Voyles; 'LaFata, Natalie'
Subject: RE: Bridgeton PS1 Air Sampling

Rob, report is drafted and under review. Hopeful that we can get you something mid next week.

Ed Galbraith

Senior Environmental Consultant
Jefferson City office: 573.638.5024
cell: 573.418.5562
egalbraith@barr.com
www.barr.com

resourceful. naturally. BARR

From: Rob G Daly [mailto:rdaly@stlmsd.com]
Sent: Thursday, October 08, 2015 10:21 AM
To: Ed Galbraith; John Lodderhose
Cc: Doug Mendoza; Mark Bright; Michael Grace; 'Kamp, Kevin'; 'bpower@republicservices.com'; 'Bouchard, Derek (DBouchard@republicservices.com)'; 'Koziatek, Dan'; Ethan R. Voyles; 'LaFata, Natalie'
Subject: RE: Bridgeton PS1 Air Sampling

Report from last event availalable when?

Rob Daly, P.E.
Division Manager - Pump Stations
Department of Operations
Metropolitan St Louis Sewer District
1025 Grand Glaize Valley Parkway
Valley Park, MO 63088
636 861-6706

rdaly@stlmsd.com

-------- Original message --------
From: Ed Galbraith <EGalbraith@barr.com>
Date: 10/08/2015 10:04 AM (GMT-06:00)
To: John Lodderhose <JRLODD@stlmsd.com>, Rob G Daly <rdaly@stlmsd.com>

Doug Mendoza

Bridgeton Landfill

From:	Rob G Daly
Sent:	Thursday, October 08, 2015 10:21 AM
To:	Ed Galbraith; John Lodderhose
Cc:	Doug Mendoza; Mark Bright; Michael Grace; 'Kamp, Kevin'; 'bpower@republicservices.com'; 'Bouchard, Derek (DBouchard@republicservices.com)'; 'Koziatek, Dan'; Ethan R. Voyles; 'LaFata, Natalie'
Subject:	RE: Bridgeton PS1 Air Sampling

Report from last event availalable when?

Rob Daly, P.E.
Division Manager - Pump Stations
Department of Operations
Metropolitan St Louis Sewer District
1025 Grand Glaize Valley Parkway
Valley Park, MO 63088
636 861-6706

rdaly@stlmsd.com

-------- Original message --------
From: Ed Galbraith <EGalbraith@barr.com>
Date: 10/08/2015 10:04 AM (GMT-06:00)
To: John Lodderhose <JRLODD@stlmsd.com>, Rob G Daly <rdaly@stlmsd.com>
Cc: Doug Mendoza <DMENDOZA@stlmsd.com>, Mark Bright <MGBRIG@stlmsd.com>, Michael Grace <MGRACE@stlmsd.com>, "'Kamp, Kevin'" <kkamp@cecinc.com>, "'bpower@republicservices.com'" <bpower@republicservices.com>, "'Bouchard, Derek (DBouchard@republicservices.com)'" <DBouchard@republicservices.com>, "'Koziatek, Dan'" <dkoziatek@cecinc.com>, "Ethan R. Voyles" <EVoyles@barr.com>, "'LaFata, Natalie'" <nlafata@cecinc.com>
Subject: Bridgeton PS1 Air Sampling

The next air sampling event at PS1 is scheduled for October 16 beginning at 8:00 am. The sampling will be conducted with the doors open and the ventilation system operating.

Ed Galbraith

Senior Environmental Consultant
Jefferson City office: 573.638.5024
cell: 573.418.5562
egalbraith@barr.com
www.barr.com

Bridgeton Landfill

Doug Mendoza

From: Ed Galbraith <EGalbraith@barr.com>
Sent: Thursday, October 08, 2015 10:05 AM
To: John Lodderhose; Rob G Daly
Cc: Doug Mendoza; Mark Bright; Michael Grace; 'Kamp, Kevin'; 'bpower@republicservices.com'; 'Bouchard, Derek (DBouchard@republicservices.com)'; 'Koziatek, Dan'; Ethan R. Voyles; 'LaFata, Natalie'
Subject: Bridgeton PS1 Air Sampling

The next air sampling event at PS1 is scheduled for October 16 beginning at 8:00 am. The sampling will be conducted with the doors open and the ventilation system operating.

Ed Galbraith

Senior Environmental Consultant
Jefferson City office: 573.638.5024
cell: 573.418.5562
egalbraith@barr.com
www.barr.com

resourceful. naturally. BARR

Doug Mendoza

From: Ed Galbraith <EGalbraith@barr.com>
Sent: Wednesday, October 07, 2015 1:10 PM
To: Doug Mendoza; John Lodderhose; Brian G. Gibson; Michael Grace; Nora C. Estopare; Rob G Daly; 'Tippett Mosby, Leanne (Leanne.TippettMosby@dnr.mo.gov)'; 'Aaron Schmidt'; 'Nagel, Chris (Christopher.Nagel@dnr.mo.gov)'; 'bpower@republicservices.com'; 'Getting, James'; 'Bouchard, Derek (DBouchard@republicservices.com)'; 'Kamp, Kevin'; 'LaFata, Natalie'; 'Cooper, Ivan (icooper@cecinc.com)'; 'lwright@cecinc.com'; Kelly Caddy; Dana B. Pasi; Christopher J. Bulmahn; Ken Gambaro; Mike Townley; 'lwright@cecinc.com'; Andrea A. Nord; Becca Coyle; 'koleary@cecinc.com'; 'sgraves@cecinc.com'; 'awyatt@herstassociates.com'
Subject: Bridgeton Landfill Leachate Report

The report has been posted to the FTP site.

The spreadsheet for 014 has been updated to reflect hauled volumes on 10/3-4/2015 along with the on-site analytical. No outside lab analytical was received by the deadline.

Two lab reports for 013 sampling are posted to meet permit reporting deadlines. An updated spreadsheet for 013 data will be posted with the monthly report next week.

The FTP site can be accessed as follows:

Copy this link and paste it into Windows Explorer (NOT Internet Explorer) ftp://ftp.barr.com/bridgetonlandfill/2015%20Reports/
User: blfdata
Password: tran$fer!

Ed Galbraith

Senior Environmental Consultant
Jefferson City office: 573.638.5024
cell: 573.418.5562
egalbraith@barr.com
www.barr.com

resourceful. naturally. BARR

Table 1

					Parameter	Biochemical Oxygen Demand (5-day)	Chemical Oxygen Demand	Cyanide	Nitrogen, ammonia as N	Oil and Grease	pH
					Total or Dissolved	NA	NA	NA	NA	NA	NA
Location	Date	Sample Collection Time	Lab Name	Data Status	Lab Report	mg/l	mg/l	mg/l	mg/l	mg/l	pH units
HW	10/04/2015		Field	No QC	WASTE_2015	--	2430	--	--	--	8.05
HW	10/03/2015		Field	No QC	WASTE_2015	--	2460	--	--	--	5.52

MSD 033452

Table 1

					Parameter	Phenolics	Solids, total suspended	Temperature, °C	Total Toxic Organics	Ultraviolet absorbance at 254 nm	Antimony	Arsenic
					Total or Dissolved	NA	NA	NA	NA	NA	Total	Total
Location	Date	Sample Collection Time	Lab Name	Data Status	Lab Report	mg/l	mg/l	deg C	ug/l	cm-1	mg/l	mg/l
HW	10/04/2015		Field	No QC	WASTE_2015	--	11740	24.2	--	--	--	--
HW	10/03/2015		Field	No QC	WASTE_2015	--	10860	33.4	--	--	--	--

MSD 033453

Doug Mendoza Bridgeton Landfill

From: LaFata, Natalie <nlafata@cecinc.com>
Sent: Monday, October 05, 2015 5:44 AM
To: Doug Mendoza; Brian G. Gibson
Subject: Bridgeton

FYI we are going to be hauling from the approved Tank 1 today. I know we have the month of October approved already, I just wanted to let you guys know that we definitely are hauling today.

Natalie L. La Fata / Plant Manager
Civil & Environmental Consultants, Inc.
Mobile: (314) 341-3375 · http://www.cecinc.com
Sent from my iPhone

Doug Mendoza Bridgeton Landfill

From: LaFata, Natalie <nlafata@cecinc.com>
Sent: Monday, October 05, 2015 11:00 AM
To: Doug Mendoza; Brian G. Gibson; Steve Grace; John Lodderhose; Kamp, Kevin
Cc: bpower@republicservices.com; Ed Galbraith; nathan.winton@mrbults.com; Kohrt, Mark; Jones, Ryan; Pichee, Randall; Boedeker, Josh; McElyea, Paul; Cooper, Ivan; Kelly Caddy; Mary; Graves, Stephen; O'Leary, Kevin; Slecka, Pat; Newton, Sherry; LaFata, Natalie
Subject: RE: Bridgeton-to-MSD hauled waste summary for SATURDAY 10-03-2015/SUNDAY 10-04-2015

This is a revised email from this morning. The #'s are different than originally posted. Here is the updated #'s:

Saturday's hauling consisted of a total of 44 loads of pre-approved activated sludge (330,000 gallons) from the Bridgeton Landfill Leachate Pretreatment Plant to the MSD-Bissell plant. 28 loads were subject to the in-house laboratory results sampled Friday, and 16 loads were subject to these in-house laboratory results that were sampled Saturday:

TSS (mg/L)	10,860
COD (mg/L)	2,460
pH (SU)	5.52

Sunday's hauling consisted of a total of 44 loads of pre-approved activated sludge (330,000 gallons) from the Bridgeton Landfill Leachate Pretreatment Plant to the MSD-Bissell plant. 25 loads were subject to the in-house laboratory results sampled Saturday, and 19 loads were subject to these in-house laboratory results that were sampled Sunday:

TSS (mg/L)	11,740
COD (mg/L)	2,430
pH (SU)	8.05

Confirmation samples will be sent to PDC twice/week as hauling resumes during the month of October. Hauling has been approved through the month of October during regular business hours.

The plan is to haul on Monday during regular business hours. If there are any questions or comments do not hesitate to give us a call/reply at your earliest convenience

Natalie L. La Fata / Plant Manager
Civil & Environmental Consultants, Inc.
4848 Park 370 Blvd., Suite F · Hazelwood, MO 63042
Toll Free: (866) 250-3679 ext. 3626 · Fax: (314) 656-4595
Mobile: (314) 341-3375 · http://www.cecinc.com
Senior Leadership · Integrated Services · Personal Business Relationships

This electronic communication and any attachments are intended solely for the use of the person or entity to which it is addressed, and may contain information that is confidential, privileged and exempt from disclosure under applicable law, including copyright law. If you are not the intended

A

Doug Mendoza

Bridgeton Landfill

From: LaFata, Natalie <nlafata@cecinc.com>
Sent: Monday, October 05, 2015 9:25 AM
To: Doug Mendoza; Brian G. Gibson; Steve Grace; John Lodderhose; Kamp, Kevin
Cc: bpower@republicservices.com; Ed Galbraith; nathan.winton@mrbults.com; Kohrt, Mark; Jones, Ryan; Pichee, Randall; Boedeker, Josh; McElyea, Paul; Cooper, Ivan; Kelly Caddy; Mary; Graves, Stephen; O'Leary, Kevin; Slecka, Pat; Newton, Sherry
Subject: Bridgeton-to-MSD hauled waste summary for SATURDAY 10-03-2015/SUNDAY 10-04-2015

Saturday's hauling consisted of a total of 28 loads of pre-approved activated sludge (210,000 gallons) from the Bridgeton Landfill Leachate Pretreatment Plant to the MSD-Bissell plant. 15 loads were subject to the in-house laboratory results sampled Friday, and 13 loads were subject to these in-house laboratory results that were sampled Saturday:

SEE 11:17 AM EMAIL

TSS (mg/L)	10,860
COD (mg/L)	2,460
pH (SU)	5.52

Sunday's hauling consisted of a total of 25 loads of pre-approved activated sludge (187,500 gallons) from the Bridgeton Landfill Leachate Pretreatment Plant to the MSD-Bissell plant. 13 loads were subject to the in-house laboratory results sampled Saturday, and 12 loads were subject to these in-house laboratory results that were sampled Sunday:

TSS (mg/L)	11,740
COD (mg/L)	2,430
pH (SU)	8.05

Confirmation samples will be sent to PDC twice/week as hauling resumes during the month of October. Hauling has been approved through the month of October during regular business hours.

The plan is to haul on Monday during regular business hours. If there are any questions or comments do not hesitate to give us a call/reply at your earliest convenience.

Natalie L. La Fata / Plant Manager
Civil & Environmental Consultants, Inc.
4848 Park 370 Blvd., Suite F · Hazelwood, MO 63042
Toll Free: (866) 250-3679 ext. 3626 · Fax: (314) 656-4595
Mobile: (314) 341-3375 · http://www.cecinc.com
Senior Leadership · Integrated Services · Personal Business Relationships

This electronic communication and any attachments are intended solely for the use of the person or entity to which it is addressed, and may contain information that is confidential, privileged and exempt from disclosure under applicable law, including copyright law. If you are not the intended

Doug Mendoza

Bridgeton Landfill

From: Martin Blecha
Sent: Sunday, October 04, 2015 11:33 AM
To: Martin Blecha; Mike Townley; Steve Grace; Brian G. Gibson; Doug Mendoza; Becca Coyle
Cc: John Lodderhose; Buffy Santel
Subject: Total Bridgeton Landfill leachate volume hauled to Bissell Point Treatment Plant from 09/27/2015 to 10/03/2015.

Total Bridgeton Landfill leachate volume hauled to Bissell Point Treatment Plant from 09/27/2015 to 10/03/2015.

9/27 – 0 gallons
9/28 – 0 gallons
9/29 – 0 gallons
9/30 – 0 gallons
10/01 – 0 gallons
10/02 – 0 gallons
10/03 –330,000 gallons
Total = 330,000 gallons

Martin J. Blecha
Metropolitan St. Louis Sewer District
Environmental Engineering Associate
10 E. Grand Ave.
St. Louis, MO. 63147-2913.
Office Phone (314)-436-8716

Bridgeton Landfill

Doug Mendoza

From: Rob G Daly
Sent: Friday, October 02, 2015 2:48 PM
To: Jonathon Sprague
Cc: Mark Bright; Mike Waxman; Jay Kniker; John Welch; Bret A. Berthold; Catherine Politte; Sean Hadley; Lance LeComb; Alverda Oppermann; Jay Hoskins; Doug Mendoza
Subject: Bridgeton Force Main/Pump Station No. 3 Odor Advisory Status Update

Sorry- one clarification. Landfill WILL be trucking some limited amounts over the weekend to Bissel TP in order to free up some space in their storage tanks in case of more extended shut down and due to planned shut down for maintenance they have planned for next week on their end. All parties on TP end and DEC end duly advised.

Rob Daly, P.E.
Division Manager- Pump Stations
Department of Operations
Metropolitan St Louis Sewer District
1025 Grand Glaize Parkway
Valley Park, MO 63088-1952
(636) 861-6706 (Office)

rdaly@stlmsd.com

From: Rob G Daly
Sent: Friday, October 02, 2015 2:46 PM
To: Jonathon Sprague
Cc: Mark Bright; Mike Waxman; Jay Kniker; John Welch; Bret A. Berthold; Catherine Politte; Sean Hadley; Lance LeComb; Alverda Oppermann; Jay Hoskins; Doug Mendoza
Subject: Bridgeton Force Main/Pump Station No. 3 Odor Advisory Status Update

Jon

Status update as follows:

1. Air release valve inspection process well underway. Will wrap up major portion of this work today/tonight (OT status) and will get difficult to access sites (in roadway- requires traffic zone set up) tomorrow morning.
2. Flow from landfill reduced to 50% of normal flow as of 1000 hrs this morning. This has helped the pumps keep up and it looks like- for now- that the situation is stable as is. We will monitor throughout the weekend and have our standby responder fully briefed and prepared to respond to likely situations at site(s).
3. Monday morning, we already have the group scheduled to re-assemble to review situation in more depth. We will be assessing ARV inspection report status, reviewing SCADA logs, and standby responder experience over weekend, in order to help in identifying course of action going forward. More to follow once have something more to talk about.

Bottom line: I think we have the situation stabilized enough to get us through the weekend, preventing overflow events (at PS 3 site or elsewhere) and while still moving some water.

I will keep group advised once we get our investigation completed. This may take a few days into next week however- to clarify expectations.

Doug Mendoza

Bridgeton Landfill

From: Rob G Daly
Sent: Friday, October 02, 2015 2:46 PM
To: Jonathon Sprague
Cc: Mark Bright; Mike Waxman; Jay Kniker; John Welch; Bret A. Berthold; Catherine Politte; Sean Hadley; Lance LeComb; Alverda Oppermann; Jay Hoskins; Doug Mendoza
Subject: Bridgeton Force Main/Pump Station No. 3 Odor Advisory Status Update

Jon

Status update as follows:

1. Air release valve inspection process well underway. Will wrap up major portion of this work today/tonight (OT status) and will get difficult to access sites (in roadway- requires traffic zone set up) tomorrow morning.
2. Flow from landfill reduced to 50% of normal flow as of 1000 hrs this morning. This has helped the pumps keep up and it looks like- for now- that the situation is stable as is. We will monitor throughout the weekend and have our standby responder fully briefed and prepared to respond to likely situations at site(s).
3. Monday morning, we already have the group scheduled to re-assemble to review situation in more depth. We will be assessing ARV inspection report status, reviewing SCADA logs, and standby responder experience over weekend, in order to help in identifying course of action going forward. More to follow once have something more to talk about.

Bottom line: I think we have the situation stabilized enough to get us through the weekend, preventing overflow events (at PS 3 site or elsewhere) and while still moving some water.

I will keep group advised once we get our investigation completed. This may take a few days into next week however- to clarify expectations.

Rob Daly, P.E.
Division Manager- Pump Stations
Department of Operations
Metropolitan St Louis Sewer District
1025 Grand Glaize Parkway
Valley Park, MO 63088-1952
(636) 861-6706 (Office)

rdaly@stlmsd.com

From: Lance LeComb
Sent: Friday, October 02, 2015 1:50 PM
To: Rob G Daly; Jonathon Sprague; Alverda Oppermann; Jay Hoskins
Cc: Mark Bright; Mike Waxman; Jay Kniker; John Welch; Bret A. Berthold; Catherine Politte; Sean Hadley
Subject: RE: Bridgeton Force Main/Pump Station No. 3 Odor Advisory

Thanks, Rob. Given the additional information, I agree – we will wait and see. Please keep us apprised.

Lance LeComb
Manager of Public Information & Spokesperson
Metropolitan St. Louis Sewer District (MSD)

Phone: (314) 768-6237
Main: (314) 768-6200
Fax: (314) 768-2753
E-mail: llecomb@stlmsd.com

From: Rob G Daly
Sent: Friday, October 02, 2015 10:55 AM
To: Lance LeComb; Jonathon Sprague; Alverda Oppermann; Jay Hoskins
Cc: Mark Bright; Mike Waxman; Jay Kniker; John Welch; Bret A. Berthold; Catherine Politte; Sean Hadley
Subject: Bridgeton Force Main/Pump Station No. 3 Odor Advisory

Lance

1. See below for Bridgeton 3 address. Right on the Rock Road.

CP-P-834	CP-P-834 BRIDGETON #3	12M1-0164S	S	San	11500	ST. CHARLE

2. Air Release valves. They are valves that release air from the pipe to prevent 'air binding' in the pump stations and to get excess corrosion inducing H2S out of the pipe. In addition- these are 'Combination' Air Release Vacuum Valves- which also suck air into the pipes to prevent the pipe from collapsing (this is a 'flexible' pipe and this is an issue with flexible pipes of this material and diameter.

3. Issues we are experiencing are: we have a possible force main air pocket, line blockage, or partially collapsed line (8 inch diameter HDPE pipe) on the (approximately) 20,000 LF section of pipe between PS No. 3 and the discharge manhole. This is causing our pumps (x2- Duplex, Submersible Pump Station) to run all out to move the incoming flow out of the wet well. This should not be the case- only one pump should operate at a time normally- and not continuously. We face the possibility of our pump station No. 3 overflowing at the wet well unless we fix the line issue, shut off the flow from the landfill, or reduce the flow from the landfill to buy us time while we investigate the problem. To be clear- we will NOT have a wet well overflow.... We will exercise the other options first.

4. Basics of site investigation: We are investigating the air release valves first – but there are 17 of them installed on the line- this will take some time. In addition- we have some air release valves in the valve vaults at PS No. 3 that we have had closed (so that we were not pushing odor out of the valve pit – since the station is immediately adjacent to a Quick Trip on St Charles Rock Road.). These valves are now open and odor has increased in the immediate vicinity of the Quik Trip.

Your call on the press release- and ordinarily I would agree that this is the right path to follow, i.e. get in front of it but I might suggest a wait and see approach and make the decision on Monday. Reason(s):

1) Odor is localized mostly at one Pump Station, i.e. Number 3. Unfortunately this is a location (QuikTrip) with a lot of folks (and noses...) moving through it on a constant basis. However- the air release valves have been open for a week and no complaints as of yet.. (that I am aware of).
2) We may fix the issue today or tomorrow and issue may go away.
3) We may shut down the flow from the landfill and they may have to truck portions or entirety of their flow- so problem may be addressed that way as well.

I recommend a 'decision point' on it Monday.

Hope this answers your questions. If not- please call me to discuss.

Rob Daly, P.E.
Division Manager- Pump Stations
Department of Operations
Metropolitan St Louis Sewer District
1025 Grand Glaize Parkway
Valley Park, MO 63088-1952
(636) 861-6706 (Office)

rdaly@stlmsd.com

From: Lance LeComb
Sent: Friday, October 02, 2015 9:25 AM
To: Rob G Daly; Jonathon Sprague; Alverda Oppermann; Jay Hoskins
Cc: Mark Bright; Mike Waxman; Jay Kniker; John Welch; Bret A. Berthold; Catherine Politte; Sean Hadley
Subject: RE: Bridgeton Force Main/Pump Station No. 3 Odor Advisory

Rob – What are the geographic locations of the pump station and the manhole – ie, the area of investigation and around which we can expect odors? What issues are we experiencing that necessitates the investigation? Lastly, what are ARVs?

Sean – We may want to put out a press release.

Lance LeComb
Manager of Public Information & Spokesperson
Metropolitan St. Louis Sewer District (MSD)
Phone: (314) 768-6237
Main: (314) 768-6200
Fax: (314) 768-2753
E-mail: llecomb@stlmsd.com

From: Rob G Daly
Sent: Friday, October 02, 2015 9:16 AM
To: Jonathon Sprague; Alverda Oppermann; Jay Hoskins
Cc: Mark Bright; Mike Waxman; Jay Kniker; John Welch; Lance LeComb; Bret A. Berthold; Catherine Politte
Subject: Bridgeton Force Main/Pump Station No. 3 Odor Advisory

All

FYI. We are having some issues with the pump station and section of the Bridgeton force main between Bridgeton PS No. 3 and the discharge manhole. We are investigating the issue and need to provide an advisory heads up that this site investigation process (which involves opening some ARV's that were formerly closed) may create some odor issues (temporarily) for the next 3-5 days- in an intermittent way.

The area around our Bridgeton PS No. 3 is probably the area of greatest impact.

This is an MSD issue- not the Landfill (at least at this time). We will of course try to keep that process as short as possible.

Once the issue is identified and resolved- I will advise the group accordingly.

Any questions- please do not hesitate to contact me.

Rob Daly, P.E.
Division Manager- Pump Stations
Department of Operations
Metropolitan St Louis Sewer District
1025 Grand Glaize Parkway
Valley Park, MO 63088-1952
(636) 861-6706 (Office)

rdaly@stlmsd.com

Doug Mendoza

From: Doug Mendoza
Sent: Friday, October 02, 2015 8:56 AM
To: 'Graves, Stephen'; 'Ed Galbraith'
Cc: Kamp, Kevin; LaFata, Natalie; Bouchard, Derek (DBouchard@republicservices.com); Kelly Caddy
Subject: RE: Bridgeton Landfill flows

Steve,

Thank you for the additional information. Regarding item 5 below, the monthly volume reports will need to include separate columns for the metered leachate discharge and the potable water introduced at SP013. Since the potable water enters downstream from the leachate metering, and MSD does not bill for any of the incoming potable water, we will need to separately add any volume charge for this discharged potable water. However, it appears that the extra volume should be minimal going forward.

Doug Mendoza
MSD Industrial Pretreatment Manager

From: Graves, Stephen [mailto:sgraves@cecinc.com]
Sent: Thursday, October 01, 2015 2:55 PM
To: Doug Mendoza; 'Ed Galbraith'
Cc: Kamp, Kevin; LaFata, Natalie; Bouchard, Derek (DBouchard@republicservices.com); Kelly Caddy
Subject: RE: Bridgeton Landfill flows

1. Why is a 0.92 correction needed for the FIT-420 meter, how was it determined that a correction was needed, and how was 0.92 arrived at?
   The 0.92 correction factor is an external calibration factor which is determined by performing a drawdown measurement of the 97k discharge tank then comparing the actual gpm as determined by the change in water height in the tank and to the gpm reading of the flowmeter.
2. Why is Bridgeton Landfill not using a meter that is accurate? After all, that is the expectation for meters. How often is it being calibrated, how is it being calibrated, and what are the plans for obtaining an accurate meter?
   The wastewater from the Bridgeton Landfill, at times, can coat piping and other equipment with calcium carbonate scale. This scale when it coats the internal body of a magnetic flow meter (like the one currently used for the discharge measurement) will interrupt the magnetic field used by these devices to determine flow and cause an inaccurate measurement. It will not, however, interrupt the precision of that measurement therefore a correction factor can be applied to give not only a precise but an accurate measurement. The drawdown measurement is being done approximately once each month and will continue to be done as necessary.
   The magnetic flow meter currently used, when clean and with no scale build-up, will operate accurately without a calibration/correction factor. Since the Bridgeton wastewater is known to cause scaling and a magnetic flow meter must be physically removed to be cleaned the magnetic flow meter will be replaced with a flume so it can be easily cleaned as needed.
   A new flume and measuring instrument is in the process of being specified and purchased and will be installed immediately upon receipt. The flume will be installed at ground level where it can be visually monitored and easily cleaned thus keeping not only the precision but the accuracy of the measurement correct at all times. This project should be completed by mid-November.
3. I don't understand how a power outage would result in a formula being changed from division to multiplication. Would you please enlighten me?

DM

Bridgeton Landfill

Doug Mendoza

From: Ed Galbraith <EGalbraith@barr.com>
Sent: Friday, October 02, 2015 8:45 AM
To: Doug Mendoza
Cc: Kelly Caddy; 'Bouchard, Derek (DBouchard@republicservices.com)'
Subject: Early notification of BLF lab reports

Doug,
Per special condition B.2 of the Bridgeton Landfill's permit, analytical reports must be submitted within 21 days of sampling.
This is to notify you that the following sample results have been posted to
ftp://ftp.barr.com/bridgetonlandfill/2015%20Reports/2015_1007/Lab%20Reports/

- MH013 collected 9/15/2015 Pace report 60202880
- MH013 collected 9/15/2015 Pace report 60202895

The results will be included in the updated tables that will be posted with the monthly report on 10/7/2015.

The FTP site can be accessed as follows:

Copy this link and paste it into Windows Explorer (NOT Internet Explorer) ftp://ftp.barr.com/bridgetonlandfill/2015%20Reports/
User: blfdata;
Password: tran$fer!

Ed Galbraith
Senior Environmental Consultant
Jefferson City office: 573.638.5024
cell: 573.418.5562
egalbraith@barr.com
www.barr.com

resourceful. naturally. BARR

Doug Mendoza

From: LaFata, Natalie <nlafata@cecinc.com>
Sent: Thursday, October 01, 2015 9:09 AM
To: Doug Mendoza; 'Ed Galbraith'
Cc: Kamp, Kevin; Bouchard, Derek (DBouchard@republicservices.com); Graves, Stephen; Kelly Caddy
Subject: RE: Bridgeton Landfill flows

Here are the updated flows for the month of September:

Date	Calculated FIT420 Mtr **(reported)**
9/1/2015	301,659
9/2/2015	142,339
9/3/2015	292,164
9/4/2015	290,917
9/5/2015	235,908
9/6/2015	240,680
9/7/2015	275,202
9/8/2015	282,875
9/9/2015	257,939
9/10/2015	306,092
9/11/2015	276,265
9/12/2015	265,995
9/13/2015	257,966
9/14/2015	296,710
9/15/2015	230,006
9/16/2015	100,388
9/17/2015	155,890
9/18/2015	203,717
9/19/2015	288,357
9/20/2015	289,822
9/21/2015	258,600
9/22/2015	295,352
9/23/2015	240,800
9/24/2015	287,491
9/25/2015	290,109
9/26/2015	260,674
9/27/2015	259,252
9/28/2015	228,461
9/29/2015	240,500
9/30/2015	266,083

Natalie L. La Fata / Plant Manager

Civil & Environmental Consultants, Inc.
4848 Park 370 Blvd., Suite F · Hazelwood, MO 63042
Toll Free: (866) 250-3679 ext. 3626 · Fax: (314) 656-4595
Mobile: (314) 341-3375 · http://www.cecinc.com
Senior Leadership · Integrated Services · Personal Business Relationships

This electronic communication and any attachments are intended solely for the use of the person or entity to which it is addressed, and may contain information that is confidential, privileged and exempt from disclosure under applicable law, including copyright law. If you are not the intended recipient of this message, you are prohibited from disclosing, reproducing, distributing, disseminating or otherwise using this transmission. Please promptly notify the sender by reply electronic communication and immediately delete this message from your system.

From: Doug Mendoza [mailto:DMENDOZA@stlmsd.com]
Sent: Thursday, October 01, 2015 7:30 AM
To: 'Ed Galbraith'
Cc: Kamp, Kevin; LaFata, Natalie; Bouchard, Derek (DBouchard@republicservices.com); Graves, Stephen; Kelly Caddy
Subject: RE: Bridgeton Landfill flows

Folks,

It has been over a week since we met to discuss Bridgeton Landfill's plans for this matter. However, I have not yet received the promised written response. The original email had asked, "Please submit or let me know when the various information will be submitted, as well as the revised report." At a minimum, I need the revised volume report and a date for when the other information will be submitted.

Thank you,
Doug Mendoza
MSD Industrial Pretreatment Manager

From: Doug Mendoza
Sent: Monday, September 21, 2015 1:57 PM
To: 'Ed Galbraith'
Cc: Kamp, Kevin; 'LaFata, Natalie'; Bouchard, Derek (DBouchard@republicservices.com); Graves, Stephen; Kelly Caddy
Subject: RE: Bridgeton Landfill flows

Ed & Bridgeton Landfill personnel,

I have several questions regarding the discharge volume data and the explanations provided to you by Bridgeton Landfill:

1. Why is a 0.92 correction needed for the FIT-420 meter, how was it determined that a correction was needed, and how was 0.92 arrived at?
2. Why is Bridgeton Landfill not using a meter that is accurate? After all, that is the expectation for meters. How often is it being calibrated, how is it being calibrated, and what are the plans for obtaining an accurate meter?
3. I don't understand how a power outage would result in a formula being changed from division to multiplication. Would you please enlighten me?
4. It sounds like Barr (and hence MSD) was not informed that a different meter started being used on 6/25/2015. So the metered discharge readings since then have been from an unreliable meter and bear little correlation to the calculated discharge from a different meter. Is this correct?
5. Potable water is introduced to the sewer with the onsite discharge. Where specifically is this potable water added? And is it upstream of the FIT-420 meter? This is a critical issue since Bridgeton Landfill is billed based only on its discharge volume and not for any incoming raw water.

Given all the above along with the information was provided below:

Bridgeton Landfill

Doug Mendoza

From: LaFata, Natalie <nlafata@cecinc.com>
Sent: Thursday, October 01, 2015 8:23 AM
To: Rob G Daly; Mark Bright; Mike Waxman; Doug Mendoza; Jeff Jones; Kevin George
Cc: O'Leary, Kevin; Graves, Stephen; Kamp, Kevin; Kohrt, Mark; LaFata, Natalie
Subject: Plant Update 10-1-2015

This update is going to cover for the end of the last update and the week of 9-21-2015 thru 9-30-2015

The plant discharge is averaging 200+ GPM. The average amounts since the last Force Main/Plant Update:

Date	**Direct Discharge** (gallons)
9/18/2015	203,717
9/19/2015	288,357
9/20/2015	289,822
9/21/2015	258,600
9/22/2015	295,352
9/23/2015	240,800
9/24/2015	287,491
9/25/2015	290,109
9/26/2015	260,674
9/27/2015	259,252
9/28/2015	228,461
9/29/2015	240,500
9/30/2015	266,083

- When odors were checked at the force main, no odors were detected and H2S readings were 0.0ppm at the pump stations.
- Sodium Nitrate dosing is at 400gpd and Ferric Chloride is being introduced to the discharge manhole 013 at 0.6-1.5gph at this time.

Any questions, please feel free to contact me!

Have a great weekend!!

Natalie L. La Fata / Plant Manager
Civil & Environmental Consultants, Inc.
4848 Park 370 Blvd., Suite F · Hazelwood, MO 63042
Toll Free: (866) 250-3679 ext. 3626 · Fax: (314) 656-4595
Mobile: (314) 341-3375 · http://www.cecinc.com
Senior Leadership · Integrated Services · Personal Business Relationships

Doug Mendoza

From: Graves, Stephen <sgraves@cecinc.com>
Sent: Thursday, October 01, 2015 2:55 PM
To: Doug Mendoza; 'Ed Galbraith'
Cc: Kamp, Kevin; LaFata, Natalie; Bouchard, Derek (DBouchard@republicservices.com); Kelly Caddy
Subject: RE: Bridgeton Landfill flows
Attachments: 97k Tank flow meter calibration check SOP.docx

1. Why is a 0.92 correction needed for the FIT-420 meter, how was it determined that a correction was needed, and how was 0.92 arrived at?
   The 0.92 correction factor is an external calibration factor which is determined by performing a drawdown measurement of the 97k discharge tank then comparing the actual gpm as determined by the change in water height in the tank and to the gpm reading of the flowmeter.
2. Why is Bridgeton Landfill not using a meter that is accurate? After all, that is the expectation for meters. How often is it being calibrated, how is it being calibrated, and what are the plans for obtaining an accurate meter?
   The wastewater from the Bridgeton Landfill, at times, can coat piping and other equipment with calcium carbonate scale. This scale when it coats the internal body of a magnetic flow meter (like the one currently used for the discharge measurement) will interrupt the magnetic field used by these devices to determine flow and cause an inaccurate measurement. It will not, however, interrupt the precision of that measurement therefore a correction factor can be applied to give not only a precise but an accurate measurement. The drawdown measurement is being done approximately once each month and will continue to be done as necessary.
   The magnetic flow meter currently used, when clean and with no scale build-up, will operate accurately without a calibration/correction factor. Since the Bridgeton wastewater is known to cause scaling and a magnetic flow meter must be physically removed to be cleaned the magnetic flow meter will be replaced with a flume so it can be easily cleaned as needed.
   A new flume and measuring instrument is in the process of being specified and purchased and will be installed immediately upon receipt. The flume will be installed at ground level where it can be visually monitored and easily cleaned thus keeping not only the precision but the accuracy of the measurement correct at all times. This project should be completed by mid-November.
3. I don't understand how a power outage would result in a formula being changed from division to multiplication. Would you please enlighten me?
   An error occurred in the spreadsheet which changed the formula and was only coincidental that it happened at the same time as the power outage.
4. It sounds like Barr (and hence MSD) was not informed that a different meter started being used on 6/25/2015. So the metered discharge readings since then have been from an unreliable meter and bear little correlation to the calculated discharge from a different meter. Is this correct?
   Yes. A different meter, FIT-420, which also measures the entire discharge from the Bridgeton Landfill Pretreatment Plant, began being used to measure the discharge after the 97k discharge tank meter failed. Barr was not notified that a new meter was in use, they were, however, notified of the new calibration factor for that new meter.
   Yes, the column labeled "Metered Discharge" has been from the failed meter and is not in any way connected to the calibration factor of 0.92.
5. Potable water is introduced to the sewer with the onsite discharge. Where specifically is this potable water added? And is it upstream of the FIT-420 meter? This is a critical issue since Bridgeton Landfill is billed based only on its discharge volume and not for any incoming raw water.
   Until the shutdown which occurred on 8/24-25/2015, potable water was introduced into the system at the permeate holding tank located inside the pretreatment building and was discharged from there. The

volume was estimated in the best way possible. Beginning on 8/24/2015 potable water has been introduced at MH-013 downstream of all wastewater discharge metering devices, from a new, separate, internally metered water hydrant located near Pump Station 1.

Stephen E. Graves, P.E. / Senior Project Manager
Civil & Environmental Consultants, Inc.
4848 Park 370 Blvd., Suite F · Hazelwood, MO 63042
Toll-Free: (866) 250-3679 · Fax: (314) 656-4595
Mobile: (314) 330-7512 · http://www.cecinc.com
Senior Leadership · Integrated Services · Personal Business Relationships

From: Doug Mendoza [mailto:DMENDOZA@stlmsd.com]
Sent: Thursday, October 01, 2015 7:30 AM
To: 'Ed Galbraith'
Cc: Kamp, Kevin; LaFata, Natalie; Bouchard, Derek (DBouchard@republicservices.com); Graves, Stephen; Kelly Caddy
Subject: RE: Bridgeton Landfill flows

Folks,

It has been over a week since we met to discuss Bridgeton Landfill's plans for this matter. However, I have not yet received the promised written response. The original email had asked, "Please submit or let me know when the various information will be submitted, as well as the revised report." At a minimum, I need the revised volume report and a date for when the other information will be submitted.

Thank you,
Doug Mendoza
MSD Industrial Pretreatment Manager

From: Doug Mendoza
Sent: Monday, September 21, 2015 1:57 PM
To: 'Ed Galbraith'
Cc: Kamp, Kevin; 'LaFata, Natalie'; Bouchard, Derek (DBouchard@republicservices.com); Graves, Stephen; Kelly Caddy
Subject: RE: Bridgeton Landfill flows

Ed & Bridgeton Landfill personnel,

I have several questions regarding the discharge volume data and the explanations provided to you by Bridgeton Landfill:

1. Why is a 0.92 correction needed for the FIT-420 meter, how was it determined that a correction was needed, and how was 0.92 arrived at?
2. Why is Bridgeton Landfill not using a meter that is accurate? After all, that is the expectation for meters. How often is it being calibrated, how is it being calibrated, and what are the plans for obtaining an accurate meter?
3. I don't understand how a power outage would result in a formula being changed from division to multiplication. Would you please enlighten me?
4. It sounds like Barr (and hence MSD) was not informed that a different meter started being used on 6/25/2015. So the metered discharge readings since then have been from an unreliable meter and bear little correlation to the calculated discharge from a different meter. Is this correct?

Doug Mendoza

From: Graves, Stephen <sgraves@cecinc.com>
Sent: Thursday, October 01, 2015 7:31 AM
To: Doug Mendoza
Cc: Ed Galbraith; Kamp, Kevin; LaFata, Natalie; Bouchard, Derek (DBouchard@republicservices.com); Kelly Caddy
Subject: Re: Bridgeton Landfill flows
Attachments: image001.png

Sorry for the delay, I'll have it to you today

Sent from my iPhone

On Oct 1, 2015, at 7:29 AM, Doug Mendoza <DMENDOZA@stlmsd.com> wrote:

> Folks,
>
> It has been over a week since we met to discuss Bridgeton Landfill's plans for this matter. However, I have not yet received the promised written response. The original email had asked, "Please submit or let me know when the various information will be submitted, as well as the revised report." At a minimum, I need the revised volume report and a date for when the other information will be submitted.
>
> Thank you,
> Doug Mendoza
> MSD Industrial Pretreatment Manager

From: Doug Mendoza
Sent: Monday, September 21, 2015 1:57 PM
To: 'Ed Galbraith'
Cc: Kamp, Kevin; 'LaFata, Natalie'; Bouchard, Derek (DBouchard@republicservices.com); Graves, Stephen; Kelly Caddy
Subject: RE: Bridgeton Landfill flows

Ed & Bridgeton Landfill personnel,

I have several questions regarding the discharge volume data and the explanations provided to you by Bridgeton Landfill:

1. Why is a 0.92 correction needed for the FIT-420 meter, how was it determined that a correction was needed, and how was 0.92 arrived at?
2. Why is Bridgeton Landfill not using a meter that is accurate? After all, that is the expectation for meters. How often is it being calibrated, how is it being calibrated, and what are the plans for obtaining an accurate meter?
3. I don't understand how a power outage would result in a formula being changed from division to multiplication. Would you please enlighten me?
4. It sounds like Barr (and hence MSD) was not informed that a different meter started being used on 6/25/2015. So the metered discharge readings since then have been from an unreliable

Doug Mendoza

From: Doug Mendoza
Sent: Thursday, October 01, 2015 7:30 AM
To: 'Ed Galbraith'
Cc: Kamp, Kevin; 'LaFata, Natalie'; Bouchard, Derek (DBouchard@republicservices.com); Graves, Stephen; Kelly Caddy
Subject: RE: Bridgeton Landfill flows

Folks,

It has been over a week since we met to discuss Bridgeton Landfill's plans for this matter. However, I have not yet received the promised written response. The original email had asked, "Please submit or let me know when the various information will be submitted, as well as the revised report." At a minimum, I need the revised volume report and a date for when the other information will be submitted.

Thank you,
Doug Mendoza
MSD Industrial Pretreatment Manager

From: Doug Mendoza
Sent: Monday, September 21, 2015 1:57 PM
To: 'Ed Galbraith'
Cc: Kamp, Kevin; 'LaFata, Natalie'; Bouchard, Derek (DBouchard@republicservices.com); Graves, Stephen; Kelly Caddy
Subject: RE: Bridgeton Landfill flows

Ed & Bridgeton Landfill personnel,

I have several questions regarding the discharge volume data and the explanations provided to you by Bridgeton Landfill:

1. Why is a 0.92 correction needed for the FIT-420 meter, how was it determined that a correction was needed, and how was 0.92 arrived at?
2. Why is Bridgeton Landfill not using a meter that is accurate? After all, that is the expectation for meters. How often is it being calibrated, how is it being calibrated, and what are the plans for obtaining an accurate meter?
3. I don't understand how a power outage would result in a formula being changed from division to multiplication. Would you please enlighten me?
4. It sounds like Barr (and hence MSD) was not informed that a different meter started being used on 6/25/2015. So the metered discharge readings since then have been from an unreliable meter and bear little correlation to the calculated discharge from a different meter. Is this correct?
5. Potable water is introduced to the sewer with the onsite discharge. Where specifically is this potable water added? And is it upstream of the FIT-420 meter? This is a critical issue since Bridgeton Landfill is billed based only on its discharge volume and not for any incoming raw water.

Given all the above along with the information was provided below:

A. Both metered and calculated discharge <u>must</u> continue to be included on the spreadsheets, at least until the point when a calculated value is no longer needed because the metered value is accurate.

SEPTEMBER 2015

TO: **File**

FROM: **Angie McDonough** amm

DATE: **September 30, 2015**

SUBJECT: **BRIDGETON LANDFILL LLC**
WASTEWATER USER CHARGE BILLING
ACCOUNT NUMBER 0039145-8

Pursuant to the MSD Industrial Wastewater Discharge Permit for the above referenced facility, please bill this facility for the following charges for the indicated billing period:

VOLUME
Hauled Waste Discharge

4,027,500 gallons X $0.016/Gal = $64,846.98

Department of Environmental Compliance (REG) labor fee is $882.28 for 21.5 extra hours.
Use Revenue Code "INFO" and utility type Q.
Budget code is 1101-08050-51011 so revenue will be credited back to Department of Environmental Compliance budget.

Department of Environmental Compliance (OT) labor fee is $2,902.09 for 46.5 extra hours.
Use Revenue Code "INFO" and utility type Q.
Budget code is 1101-08050-51020 so revenue will be credited back to Department of Environmental Compliance budget.

Total Bill = $68,631.35

The volume was obtained from the customer's on-site discharge self-monitoring report and hauled waste total truck capacities.

SOURCE OF WASTE: SP014 Commingled landfill leachate and landfill gas collection system condensate

BILLING PERIOD: August 2015

Other applicable wastewater user charges, as per Ordinance 13758, should be included in this bill. Please call me at 314-436-8762 if you have any questions.

bv

ec: Brian Gibson
Bridgeton Republic Services

FILE: IU, Bridgeton Landfill LLC, 1003-8030-00

Doug Mendoza Bridgeton Landfill

From: LaFata, Natalie <nlafata@cecinc.com>
Sent: Thursday, September 24, 2015 8:27 AM
To: Doug Mendoza
Cc: John Lodderhose; Brian G. Gibson; Graves, Stephen
Subject: October Hauling Request

Doug, the Bridgeton Landfill Pretreatment Plant is formally requesting hauling acceptance during the month of October during regular business hours. We would like to request the option to haul up to 44 loads, when necessary, of approved activated sludge/permeate per day to be approved. If there are any overtime requests through the month, we do understand that a weeks' notice is needed for the overtime coverage requests.

The main reason for this request is due to the recent force main pump station shut downs because of communication issues that are beyond our control. MSD is in the process of remedying those issues. Also, if there are any scheduled shut downs at the pre-treatment plant that may occur for maintenance items, hauling could become necessary.

Please call me with any questions.

Natalie L. La Fata / Plant Manager
Civil & Environmental Consultants, Inc.
4848 Park 370 Blvd., Suite F · Hazelwood, MO 63042
Toll Free: (866) 250-3679 ext. 3626 · Fax: (314) 656-4595
Mobile: (314) 341-3375 · http://www.cecinc.com
Senior Leadership · Integrated Services · Personal Business Relationships

This electronic communication and any attachments are intended solely for the use of the person or entity to which it is addressed, and may contain information that is confidential, privileged and exempt from disclosure under applicable law, including copyright law. If you are not the intended recipient of this message, you are prohibited from disclosing, reproducing, distributing, disseminating or otherwise using this transmission. Please promptly notify the sender by reply electronic communication and immediately delete this message from your system.

Doug Mendoza

10038030

From: Doug Mendoza
Sent: Tuesday, September 29, 2015 1:46 PM
To: Laura Joiner
Cc: Cynthia Chalk; Angie McDonough; Brian G. Gibson
Subject: Two companies that need to have Sewer Service Charge removed from ECIS billing accounts

Laura,

DEC has two more companies where the sewer service charge needs to be removed from the accounts. These are two special cases where they meter all wastewater discharged to MSD, which includes wastewater that does not come from the incoming water line.

I believe that Finance has been informed of the first company before, but I don't see that it has been changed in ECIS:

BRIDGETON LANDFILL LLC, Account 39145, Service Address 13570 ST CHARLES ROCK RD, BRIDGETON MO 63044-2430, Premises Number 10038030

The other company that needs to have its sewer service charge removed is:

MERRELL BROS INC, Account 826987, Service Address 6400 MCKISSOCK AVE, ST LOUIS MO 63147-2828, Premises Number 10433765

Thanks,
Doug Mendoza

PS. Brian – Did I leave any info out?

Doug Mendoza

From: Doug Mendoza
Sent: Thursday, September 24, 2015 8:56 AM
To: 'LaFata, Natalie'
Cc: John Lodderhose; Brian G. Gibson; Graves, Stephen
Subject: RE: October Hauling Request for Bridgeton Landfill

MSD approves the request for approval to haul wastewater from Bridgeton Landfill during the month of October 2015, subject to the same conditions as for the September 2015 approval. The approval is granted because the new force main system is still in the process of achieving full operational status. In the future, approvals are expected to be granted on an actual as needed basis, rather than a blanket pre-approval.

Sincerely,
Doug Mendoza
MSD Industrial Pretreatment manager

From: LaFata, Natalie [mailto:nlafata@cecinc.com]
Sent: Thursday, September 24, 2015 8:27 AM
To: Doug Mendoza
Cc: John Lodderhose; Brian G. Gibson; Graves, Stephen
Subject: October Hauling Request

Doug, the Bridgeton Landfill Pretreatment Plant is formally requesting hauling acceptance during the month of October during regular business hours. We would like to request the option to haul up to 44 loads, when necessary, of approved activated sludge/permeate per day to be approved. If there are any overtime requests through the month, we do understand that a weeks' notice is needed for the overtime coverage requests.

The main reason for this request is due to the recent force main pump station shut downs because of communication issues that are beyond our control. MSD is in the process of remedying those issues. Also, if there are any scheduled shut downs at the pre-treatment plant that may occur for maintenance items, hauling could become necessary.

Please call me with any questions.

Natalie L. La Fata / Plant Manager
Civil & Environmental Consultants, Inc.
4848 Park 370 Blvd., Suite F · Hazelwood, MO 63042
Toll Free: (866) 250-3679 ext. 3626 · Fax: (314) 656-4595
Mobile: (314) 341-3375 · http://www.cecinc.com
Senior Leadership · Integrated Services · Personal Business Relationships

This electronic communication and any attachments are intended solely for the use of the person or entity to which it is addressed, and may contain information that is confidential, privileged and exempt from disclosure under applicable law, including copyright law. If you are not the intended recipient of this message, you are prohibited from disclosing, reproducing, distributing, disseminating or otherwise using this transmission. Please promptly notify the sender by reply electronic communication and immediately delete this message from your system.

Doug Mendoza

From: Paceport Auto EDD Notification <carin.ferris@pacelabs.com>
Sent: Wednesday, September 23, 2015 2:40 PM
To: Doug Mendoza; carin.ferris@pacelabs.com
Subject: Bridgeton Landfill (Pace Project # 30158070)
Attachments: 30158070_frc.pdf

CB 10-14

Paceport Login

Paceport Auto Edd Notification

This email contains EDDs and Reports generated by Paceport's automated deliverable service. The attached files have been authorized to be sent to you due to the completion of project Bridgeton Landfill (Pace Project # 30158070). Your Pace project manager has been CC'ed on this email so that you may request any further assistance.

To access this project's page in paceport click on the following link.
http://paceport.pacelabs.com/ClientPortal/mvc/projectDetails/modelAndView?projectID=30158070&systemID=lims30

Copyright © 2012 Pace Analytical Services, Inc

The email and documents accompanying this transmission contain confidential information belonging to the sender who is legally privileged. The information is intended only for the use of the individual(s) or entity(ies) named herein. If you are not the intended recipient, you are hereby notified that any disclosure, copying distribution or the taking of any action in reliance on the contents of this information is strictly prohibited. If you have received this in error, please immediately notify us by telephone (1.888.990.PACE) to arrange for return of the original documents.

Pace Analytical®
www.pacelabs.com

Pace Analytical Services, Inc.
1638 Roseytown Road - Suites 2,3,4
Greensburg, PA 15601
(724)850-5600

September 23, 2015

Doug Mendoza
Metropolitan St. Louis Sewer District
10 Grand Avenue
Saint Louis, MO 63147

RE: Project: Bridgeton Landfill
Pace Project No.: 30158070

Dear Doug Mendoza:
Enclosed are the analytical results for sample(s) received by the laboratory on September 01, 2015. The results relate only to the samples included in this report. Results reported herein conform to the most current TNI standards and the laboratory's Quality Assurance Manual, where applicable, unless otherwise noted in the body of the report.

If you have any questions concerning this report, please feel free to contact me.

Sincerely,

Carin A. Ferris

Carin Ferris
carin.ferris@pacelabs.com
Project Manager

Enclosures

Pace Analytical®
www.pacelabs.com

Pace Analytical Services, Inc.
1638 Roseytown Road - Suites 2,3,4
Greensburg, PA 15601
(724)850-5600

ANALYTICAL RESULTS - RADIOCHEMISTRY

Project: Bridgeton Landfill
Pace Project No.: 30158070

Sample: Bridgeton Landfill **Lab ID: 30158070001** Collected: 08/27/15 09:10 Received: 09/01/15 10:45 Matrix: Water
PWS: Site ID: Sample Type:

Comments:
- Upon receipt at the laboratory, 12 mls of nitric acid were added to the sample to meet the sample preservation requirement of pH <2 for radiochemistry analysis.
- Collection time on the sample bottles is 09:10; COC indicates 09:26. Client confirmed time of 09:10.

Parameters	Method	Act ± Unc (MDC) Carr Trac	Units	Analyzed	CAS No.	Qual
Gross Alpha	EPA 900.0	**8.43 ± 23.2 (44.1)** **C:NA T:NA**	pCi/L	09/16/15 21:39	12587-46-1	
Gross Beta	EPA 900.0	**158 ± 36.4 (34.3)** **C:NA T:NA**	pCi/L	09/16/15 21:39	12587-47-2	
Actinium-228	EPA 901.1	**4.313 ± 15.793 (26.550)** **C:NA T:NA**	pCi/L	09/22/15 12:07	14331-83-0	
Bismuth-212	EPA 901.1	**0.000 ± 32.650 (164.600)** **C:NA T:NA**	pCi/L	09/22/15 12:07	14913-49-6	
Bismuth-214	EPA 901.1	**14.885 ± 16.645 (20.150)** **C:NA T:NA**	pCi/L	09/22/15 12:07	14733-03-0	
Lead-212	EPA 901.1	**1.660 ± 13.766 (17.590)** **C:NA T:NA**	pCi/L	09/22/15 12:07	15092-94-1	
Lead-214	EPA 901.1	**11.726 ± 17.012 (21.320)** **C:NA T:NA**	pCi/L	09/22/15 12:07	15067-28-4	
Potassium-40	EPA 901.1	**235.460 ± 99.428 (115.300)** **C:NA T:NA**	pCi/L	09/22/15 12:07	13966-00-2	
Radium-226	EPA 901.1	**4.132 ± 147.010 (194.300)** **C:NA T:NA**	pCi/L	09/22/15 12:07	13982-63-3	
Radium-228	EPA 901.1	**4.313 ± 15.793 (26.550)** **C:NA T:NA**	pCi/L	09/22/15 12:07	15262-20-1	
Thallium-208	EPA 901.1	**0.000 ± 6.345 (13.490)** **C:NA T:NA**	pCi/L	09/22/15 12:07	14913-50-9	
Thorium-234	EPA 901.1	**0.000 ± 133.470 (305.700)** **C:NA T:NA**	pCi/L	09/22/15 12:07	15065-10-8	
Uranium-235	EPA 901.1	**18.886 ± 43.374 (53.390)** **C:NA T:NA**	pCi/L	09/22/15 12:07	15117-96-1	
Radium-226	EPA 903.1	**1.44 ± 3.66 (5.78)** **C:NA T:90%**	pCi/L	09/21/15 12:26	13982-63-3	
Radium-228	EPA 904.0	**-0.456 ± 1.35 (3.24)** **C:68% T:84%**	pCi/L	09/22/15 17:56	15262-20-1	
Total Uranium	ASTM D5174-97	**3.47 ± 0.129 (1.927)** **C:NA T:NA**	ug/L	09/21/15 18:56	7440-61-1	
Thorium-230	HSL-300	**0.238 ± 0.251 (0.322)** **C:NA T:86%**	pCi/L	09/10/15 09:09	14269-63-7	N2
Uranium-234	HSL-300	**0.159 ± 0.264 (0.534)** **C:NA T:86%**	pCi/L	09/10/15 09:11	13966-29-5	N2
Uranium-235	HSL-300	**0.083 ± 0.305 (0.225)** **C:NA T:86%**	pCi/L	09/10/15 09:11	15117-96-1	N2
Uranium-238	HSL-300	**0.070 ± 0.234 (0.452)** **C:NA T:86%**	pCi/L	09/10/15 09:11		N2

Gross Gamma

U-Natural

REPORT OF LABORATORY ANALYSIS

This report shall not be reproduced, except in full,
without the written consent of Pace Analytical Services, Inc..

Pace Analytical Services, Inc.
1638 Roseytown Road - Suites 2,3,4
Greensburg, PA 15601
(724)850-5600

QUALIFIERS

Project: Bridgeton Landfill
Pace Project No.: 30158070

DEFINITIONS

DF - Dilution Factor, if reported, represents the factor applied to the reported data due to dilution of the sample aliquot.

ND - Not Detected at or above adjusted reporting limit.

J - Estimated concentration above the adjusted method detection limit and below the adjusted reporting limit.

MDL - Adjusted Method Detection Limit.

PQL - Practical Quantitation Limit.

RL - Reporting Limit.

S - Surrogate

1,2-Diphenylhydrazine decomposes to and cannot be separated from Azobenzene using Method 8270. The result for each analyte is a combined concentration.

Consistent with EPA guidelines, unrounded data are displayed and have been used to calculate % recovery and RPD values.

LCS(D) - Laboratory Control Sample (Duplicate)

MS(D) - Matrix Spike (Duplicate)

DUP - Sample Duplicate

RPD - Relative Percent Difference

NC - Not Calculable.

SG - Silica Gel - Clean-Up

U - Indicates the compound was analyzed for, but not detected.

N-Nitrosodiphenylamine decomposes and cannot be separated from Diphenylamine using Method 8270. The result reported for each analyte is a combined concentration.

Act - Activity

Unc - Uncertainty: SDWA = 1.96 sigma count uncertainty, all other matrices = Expanded Uncertainty (95% confidence interval). Gamma Spec = Expanded Uncertainty (95.4% Confidence Interval)

(MDC) - Minimum Detectable Concentration

Trac - Tracer Recovery (%)

Carr - Carrier Recovery (%)

Pace Analytical is TNI accredited. Contact your Pace PM for the current list of accredited analytes.

TNI - The NELAC Institute.

ANALYTE QUALIFIERS

N2 The lab does not hold TNI accreditation for this parameter.

This report shall not be reproduced, except in full,
without the written consent of Pace Analytical Services, Inc..

Pace Analytical®
www.pacelabs.com

CHAIN-OF-CUSTODY / Analytical Request Document

The Chain-of-Custody is a LEGAL DOCUMENT. All relevant fields must be completed accurately.

Page: of

1801723

Section A Required Client Information:

Company: MSD
Address: 10 E. Grand St. Louis, MO 63147
Email To: dmendoza@sthmsd.com
Phone: 314-436-8717 Fax: 314-436-8753
Requested Due Date/TAT:

Section B Required Project Information:

Report To: Mr. Dary Mendoza
Copy To:
Purchase Order No.:
Project Name:
Project Number:

Section C Invoice Information:

Attention:
Company Name:
Address:
Pace Quote Reference:
Pace Project Manager:
Pace Profile #:

REGULATORY AGENCY

☐ NPDES ☐ GROUND WATER ☐ DRINKING WATER
☐ UST ☐ RCRA ☒ OTHER Wastewater

Site Location STATE:

Section D Required Client Information

Matrix Codes (MATRIX / CODE): Drinking Water DW, Water WT, Waste Water WW, Product P, Soil/Solid SL, Oil OL, Wipe WP, Air AR, Tissue TS, Other OT

Requested Analysis Filtered (Y/N)

ITEM #	SAMPLE ID (A-Z, 0-9 / ,-) Sample IDs MUST BE UNIQUE	MATRIX CODE (see valid codes to left)	SAMPLE TYPE (G=GRAB C=COMP)	COLLECTED COMPOSITE START DATE	COMPOSITE START TIME	COMPOSITE END/GRAB DATE	COMPOSITE END/GRAB TIME	SAMPLE TEMP AT COLLECTION	# OF CONTAINERS	Unpreserved	H_2SO_4	HNO_3	HCl	NaOH	$Na_2S_2O_3$	Methanol	Other	Analysis Test (Y/N)	Radium-226	Radium-228	Gross Alpha	Gross Gamma	Uranium Natural (8)	Thorium-230 (8)	Uranium (ug/l)			(8) See Attachment	Residual Chlorine (Y/N)	Pace Project No./ Lab I.D.
1	Bridgeton Landfill	OT	C	8-26-15	9:38	8-27-15	~~9:26~~ 9:10 -2hr		5			X																		30158070
2																														
3																														
4																														
5																														
6																														
7																														
8																														
9																														
10																														
11																														
12																														

ADDITIONAL COMMENTS	RELINQUISHED BY / AFFILIATION	DATE	TIME	ACCEPTED BY / AFFILIATION	DATE	TIME	SAMPLE CONDITIONS			
	[signature]	8-27-15	12:30	Allyna R Muchmey Pace	9/1/15	1845	NA	N	N	Y

ORIGINAL

SAMPLER NAME AND SIGNATURE

PRINT Name of SAMPLER: Jason Edwards

SIGNATURE of SAMPLER: [signature] DATE Signed (MM/DD/YY): 8/27/15

Temp in °C | Received on Ice (Y/N) | Custody Sealed Cooler (Y/N) | Samples Intact (Y/N)

*Important Note: By signing this form you are accepting Pace's NET 30 day payment terms and agreeing to late charges of 1.5% per month for any invoices not paid within 30 days.

F-ALL-Q-020rev.07, 15-May-2007

MSD 033481

<u>The particular radioactivity/radionuclides we need tested for each set are:</u>

- Radium-226 (pci/L)
- Radium-228 (pci/L)
- Gross Alpha (pci/L)
- Gross Beta (pci/L)
- Gross Gamma (pci/L)
  - Consisting of
    - Actinium-228 (pci/L)
    - Bismuth-212 (pci/L)
    - Bismuth-214 (pci/L)
    - Lead-212 (pci/L)
    - Lead-214 (pci/L)
    - Potassium-40 (pci/L)
    - Radium-226 (pci/L)
    - Radium-228 (pci/L)
    - Thallium-208 (pci/L)
    - Thorium-234 (pci/L)
    - Uranium-235 (pci/L)
- Uranium-natural (pci/L)
  - Consisting of
    - Uranium-234 (pci/L)
    - Uranium-235 (pci/L)
    - Uranium-238 (pci/L)
  - I understand that you likely will simply analyze for the three isotopes, and MSD itself will sum them for the U-natural total
- **Thorium-230 (pci/L)**
  - **This is a new one we just added**
- Uranium, in concentration(ug/L)

Brian Gibson
Metropolitan St. Louis Sewer District
Division of Environmental Compliance
10 East Grand Avenue
St. Louis, MO 63147-2913
(314) 436-8784
bgibson@stlmsd.com

Sample Condition Upon Receipt

Pace Analytical

Client Name: MSD

Project # 30158070 DPG 9-1-15

Courier: ☐ Fed Ex ☑ UPS ☐ USPS ☐ Client ☐ Commercial ☐ Pace Other _____

Tracking #: 1Z2Y10R0392083493

Custody Seal on Cooler/Box Present: ☐ yes ☑ no Seals intact: ☐ yes ☐ no Biological Tissue is Frozen: Yes No

Packing Material: Bubble Wrap ✓ Bubble Bags ___ None ___ Other _____

Thermometer Used N/A Type of Ice: Wet Blue (None) ☐ Samples on ice, cooling process has begun

Cooler Temp.: Observed Temp.: — °C Correction Factor: — °C Final Temp: — °C

Date and Initials of person examining contents: ARM 9/1/15

Temp should be above freezing to 6°C

				Comments:
Chain of Custody Present:	☑Yes	☐No	☐N/A	1.
Chain of Custody Filled Out:	☑Yes	☐No	☐N/A	2.
Chain of Custody Relinquished:	☑Yes	☐No	☐N/A	3.
Sampler Name & Signature on COC:	☑Yes	☐No	☐N/A	4.
Samples Arrived within Hold Time:	☑Yes	☐No	☐N/A	5.
Short Hold Time Analysis (<72hr):	☐Yes	☑No	☐N/A	6.
Rush Turn Around Time Requested:	☐Yes	☑No	☐N/A	7.
Sufficient Volume:	☑Yes	☐No	☐N/A	8.
Correct Containers Used:	☑Yes	☐No	☐N/A	9.
-Pace Containers Used:	☑Yes	☐No	☐N/A	
Containers Intact:	☑Yes	☐No	☐N/A	10.
Filtered volume received for Dissolved tests	☐Yes	☐No	☑N/A	11.
Sample Labels match COC: -Includes date/time/ID/Analysis Matrix: WT	☐Yes	☑No	☐N/A	12. Time on sample bottles 150910
All containers needing preservation have been checked.	☑Yes	☐No	☐N/A	13. Added 12mL HNO_3 to each sample bottle pH<2 ARM 9/1/15 1515
All containers needing preservation are found to be in compliance with EPA recommendation.	☐Yes	☑No	☐N/A	Initial when completed: ARM Lot # of added preservative: OL15-0744
exceptions: VOA, coliform, TOC, O&G, Phenols	☐Yes	☑No		
Samples checked for dechlorination:	☐Yes	☐No	☑N/A	14.
Headspace in VOA Vials (>6mm):	☐Yes	☐No	☑N/A	15.
Trip Blank Present:	☐Yes	☐No	☑N/A	16.
Trip Blank Custody Seals Present	☐Yes	☐No	☑N/A	
Pace Trip Blank Lot # (if purchased): _____				

Client Notification/ Resolution: Field Data Required? Y / N

Person Contacted: Daig Mendoza Date/Time: 9/2/15

Comments/ Resolution: sample collection time is 09:10

Project Manager Review: Carin Serra **Date:** 9/2/15

Note: Whenever there is a discrepancy affecting North Carolina compliance samples, a copy of this form will be sent to the North Carolina DEHNR Certification Office (i.e out of hold, incorrect preservative, out of temp, incorrect containers)

Pace Analytical

page 2

Project Number: 30158070

Client Name: MSD

											001	Item No.
											WT	Matrix Code
												Glass Jar (120 / 250 / 500 / 1L)
												Soil kit (2 SB, 1M, soil jar)
												Chemistry (250 / 500 / 1L)
												Organics (1L)
												Nutrient (250 / 500)
												Phenolics (250 ml)
												TOC (40 ml / 250 ml)
												TOX (250 ml)
												Total Metals
												Dissolved Metals preserved Y N
												O & G (1L)
												TPH (1L)
												VOA (40 ml 30 ml)
												Cyanide (250 ml)
												Sulfide (500 ml)
												Bacteria (120 ml)
												Wipes / swipe/ smear/ filter
											9	Radchem Nalgene (125 / 250 / 500 / 1L)
												Radchem Nalgene (1/2 gal. / 1 gal.L)
												Cubitainer (500 ml / 4L)
												Ziploc
												Other
												Other

SCURF Back (C016-4 15May2012).xls

Doug Mendoza

From: Doug Mendoza
Sent: Monday, September 21, 2015 1:57 PM
To: 'Ed Galbraith'
Cc: Kamp, Kevin; 'LaFata, Natalie'; Bouchard, Derek (DBouchard@republicservices.com); Graves, Stephen; Kelly Caddy
Subject: RE: Bridgeton Landfill flows

Ed & Bridgeton Landfill personnel,

I have several questions regarding the discharge volume data and the explanations provided to you by Bridgeton Landfill:

1. Why is a 0.92 correction needed for the FIT-420 meter, how was it determined that a correction was needed, and how was 0.92 arrived at?
2. Why is Bridgeton Landfill not using a meter that is accurate? After all, that is the expectation for meters. How often is it being calibrated, how is it being calibrated, and what are the plans for obtaining an accurate meter?
3. I don't understand how a power outage would result in a formula being changed from division to multiplication. Would you please enlighten me?
4. It sounds like Barr (and hence MSD) was not informed that a different meter started being used on 6/25/2015. So the metered discharge readings since then have been from an unreliable meter and bear little correlation to the calculated discharge from a different meter. Is this correct?
5. Potable water is introduced to the sewer with the onsite discharge. Where specifically is this potable water added? And is it upstream of the FIT-420 meter? This is a critical issue since Bridgeton Landfill is billed based only on its discharge volume and not for any incoming raw water.

Given all the above along with the information was provided below:

A. Both metered and calculated discharge <u>must</u> continue to be included on the spreadsheets, at least until the point when a calculated value is no longer needed because the metered value is accurate.
B. In addition, as I mentioned under 2 above, Bridgeton Landfill must either calibrate its meter accurately, or obtain a meter than can be accurately calibrated. If a meter must be obtained, plans to do so and a date for purchase/delivery of the meter must be submitted.
C. An SOP must be developed, or submitted for approval if already developed, for checking and recalibrating the discharge meter. The SOP shall include at least the manufacturer's recommendations, frequencies for calibrations/checks, and logs to record the results. (For your information, the SOP requirement is a standard that we now require of all customers submitting volume reports for discharges that come from unmetered sources.)
D. The above actions and reports are being required under MSD Ordinance 12559, Article VII, Section Five.D and MSD Ordinance 13758, Section Three(A)(4 & 5).

Please submit or let me know when the various information will be submitted, as well as the revised report.

Thank you,
Doug Mendoza
MSD Industrial Pretreatment Manager

From: Ed Galbraith [mailto:EGalbraith@barr.com]
Sent: Monday, September 21, 2015 11:32 AM
To: Doug Mendoza
Cc: Kamp, Kevin; 'LaFata, Natalie'; Bouchard, Derek (DBouchard@republicservices.com); Graves, Stephen; Kelly Caddy
Subject: FW: Bridgeton flows

Doug,

I've spoken with Natalie and Steve Graves about your question. A brief history of the issue: as you recall, on about 5/11/2015 it was discovered that the 97K tank meter was not operating properly. At that time, flow calibrations were performed and a factor of 0.61 was applied to the 97K readings to derive a "Calculated Discharge". At that time the report spreadsheet was modified to include columns for both "Metered" and "Calculated" flow. The flow was re-calibrated several times, however staff eventually decided that the 97K meter reliability was diminished to the point that another method was needed for determining flow. Since 6/25/2015, a different flow meter, (FIT-420) located in the pretreatment building has been used. This meter reading is corrected with a value of 0.92 to derive the "Calculated Discharge", which is the flow through MH013. Because of a miscue between CEC and Barr, the change in meter was not reflected in Barr's report and the "Metered Discharge" continued to be the 97K tank reading. We propose to remove the "Metered Discharge" number in future spreadsheets to avoid confusion, and provide only the "Calculated Discharge."

Also, in reviewing this, we realized that the 0.92 correction factor was used to divide the FIT-420 meter reading up until 8/7/2015. Then on 8/9/2015 the formula switches to multiply by 0.92. (there was a power outage on 8/8) That was not intended and the data needs to be revised. We will post a new report with the corrected "Calculated Flow" data, which will increase as a result of the change. I apologize for any inconvenience. Please let me know if you have any questions. Thank you.

Ed Galbraith

Senior Environmental Consultant
Jefferson City office: 573.638.5024
cell: 573.418.5562
egalbraith@barr.com
www.barr.com

resourceful. naturally. BARR

From: Ed Galbraith [mailto:EGalbraith@barr.com]
Sent: Tuesday, September 15, 2015 8:18 PM
To: Doug Mendoza
Subject: RE: Question re. Bridgeton Landfill's metered discharge vs. calculated discharge

Hi Doug, I've been out of the office most of this week so far. I saw this before I left yesterday and forgot to circle back. I'll be out tomorrow as well, but I'll forward this and hopefully get back to you on Thursday.

Ed Galbraith

Senior Environmental Consultant
Jefferson City office: 573.638.5024
cell: 573.418.5562
egalbraith@barr.com

Doug Mendoza

Bridgeton Landfill

From: Ed Galbraith <EGalbraith@barr.com>
Sent: Monday, September 21, 2015 11:32 AM
To: Doug Mendoza
Cc: Kamp, Kevin; 'LaFata, Natalie'; Bouchard, Derek (DBouchard@republicservices.com); Graves, Stephen; Kelly Caddy
Subject: FW: Bridgeton flows

Doug,

I've spoken with Natalie and Steve Graves about your question. A brief history of the issue: as you recall, on about 5/11/2015 it was discovered that the 97K tank meter was not operating properly. At that time, flow calibrations were performed and a factor of 0.61 was applied to the 97K readings to derive a "Calculated Discharge". At that time the report spreadsheet was modified to include columns for both "Metered" and "Calculated" flow. The flow was re-calibrated several times, however staff eventually decided that the 97K meter reliability was diminished to the point that another method was needed for determining flow. Since 6/25/2015, a different flow meter, (FIT-420) located in the pretreatment building has been used. This meter reading is corrected with a value of 0.92 to derive the "Calculated Discharge", which is the flow through MH013. Because of a miscue between CEC and Barr, the change in meter was not reflected in Barr's report and the "Metered Discharge" continued to be the 97K tank reading. We propose to remove the "Metered Discharge" number in future spreadsheets to avoid confusion, and provide only the "Calculated Discharge."

Also, in reviewing this, we realized that the 0.92 correction factor was used to divide the FIT-420 meter reading up until 8/7/2015. Then on 8/9/2015 the formula switches to multiply by 0.92. (there was a power outage on 8/8) That was not intended and the data needs to be revised. We will post a new report with the corrected "Calculated Flow" data, which will increase as a result of the change. I apologize for any inconvenience. Please let me know if you have any questions. Thank you.

Ed Galbraith

Senior Environmental Consultant
Jefferson City office: 573.638.5024
cell: 573.418.5562
egalbraith@barr.com
www.barr.com

resourceful. naturally. BARR

From: Ed Galbraith [mailto:EGalbraith@barr.com]
Sent: Tuesday, September 15, 2015 8:18 PM
To: Doug Mendoza
Subject: RE: Question re. Bridgeton Landfill's metered discharge vs. calculated discharge

Hi Doug, I've been out of the office most of this week so far. I saw this before I left yesterday and forgot to circle back. I'll be out tomorrow as well, but I'll forward this and hopefully get back to you on Thursday.

Ed Galbraith

Bridgeton Landfill

Doug Mendoza

From: LaFata, Natalie <nlafata@cecinc.com>
Sent: Friday, September 18, 2015 2:38 PM
To: Rob G Daly; Mark Bright; Mike Waxman; Doug Mendoza; Jeff Jones; Kevin George
Cc: O'Leary, Kevin; Graves, Stephen; Kamp, Kevin; Kohrt, Mark; LaFata, Natalie
Subject: Plant Update 9-18-2015 - Correction

This is an update from the earlier email. I had the wrong #'s entered for the **Permeate Produced (gallons)** column. Any questions, please feel free to contact me!!

The plant discharge is averaging 200+ GPM. The average amounts since the last Force Main/Plant Update:

Date	**Direct Discharge** (gallons)
9/11/2015	276,265
9/12/2015	265,994
9/13/2015	257,996
9/14/2015	296,709
9/15/2015	271,745
9/16/2015	118,605
9/17/2015	155,890

- When odors were checked at the force main, no odors were detected and H2S readings were 0.0ppm at the pump stations.
- Sodium Nitrate dosing is at 400gpd and Ferric Chloride is being introduced to the discharge manhole 013 at 0.6-1.5gph at this time.
- This week, flow was temporarily decreased from the plant to the force main due to a continuing issues with a high wet well at pump station #3. The problem has since been resolved.

Any questions, please feel free to contact me!

Have a great weekend!!

Natalie L. La Fata / Plant Manager
Civil & Environmental Consultants, Inc.
4848 Park 370 Blvd., Suite F · Hazelwood, MO 63042
Toll Free: (866) 250-3679 ext. 3626 · Fax: (314) 656-4595
Mobile: (314) 341-3375 · http://www.cecinc.com
Senior Leadership · Integrated Services · Personal Business Relationships

This electronic communication and any attachments are intended solely for the use of the person or entity to which it is addressed, and may contain information that is confidential, privileged and exempt from disclosure under applicable law, including copyright law. If you are not the intended

recipient of this message, you are prohibited from disclosing, reproducing, distributing, disseminating or otherwise using this transmission. Please promptly notify the sender by reply electronic communication and immediately delete this message from your system.

Doug Mendoza Bridgeton Landfill

From: Rob G Daly
Sent: Friday, September 18, 2015 1:12 PM
To: Doug Mendoza; Michael Grace
Subject: Bridgeton PS No. 1 Common Standard Operating Procedure (SOP)
Attachments: MSD_BridgetonCommonOperationsSOP.Final rev.docx

Mike, Doug

Just FYI- this is our final Common SOP.

Rob Daly, P.E.
Division Manager- Pump Stations
Department of Operations
Metropolitan St Louis Sewer District
1025 Grand Glaize Parkway
Valley Park, MO 63088-1952
(636) 861-6706 (Office)

rdaly@stlmsd.com

From: Kamp, Kevin [mailto:kkamp@cecinc.com]
Sent: Friday, September 18, 2015 11:25 AM
To: Rob G Daly
Cc: Mark Bright; 'Power, Brian (BPower@republicservices.com)'; Graves, Stephen; LaFata, Natalie; Bouchard, Derek (DBouchard@republicservices.com)
Subject: RE: Bridgeton PS No. 1 Common Standard Operating Procedure (SOP) Review Request

Rob,
Attached is the final version (or current version) of the SOP. The one number to call has been established and is at the site and in use. Please let me know if there are further comments or questions.

Sincerely,

Kevin T. Kamp, P.E. / Principal
Civil & Environmental Consultants, Inc.
4848 Park 370 Blvd., Suite F · Hazelwood, MO 63042
Toll-Free: 866-250-3679 · Direct: 314-656-4570 · Fax: 314-656-4595 ·
Mobile: 314-397-0414 · http://www.cecinc.com
Senior Leadership · Integrated Services · Personal Business Relationships

---

From: Rob G Daly
Sent: Wednesday, September 09, 2015 3:30 PM
To: 'Kamp, Kevin'
Cc: Mark Bright; Power, Brian (BPower@republicservices.com); Graves, Stephen; LaFata, Natalie
Subject: RE: Bridgeton PS No. 1 Common Standard Operating Procedure (SOP) Review Request

Many thanks- we are there as far as I am concerned (minus that one small issue) so we can wait until that issue is resolved. Will standby and if have not heard from you by Monday- will check in.

Rob Daly, P.E.
Division Manager- Pump Stations
Department of Operations
Metropolitan St Louis Sewer District
1025 Grand Glaize Parkway
Valley Park, MO 63088-1952
(636) 861-6706 (Office)

rdaly@stlmsd.com

From: Kamp, Kevin [mailto:kkamp@cecinc.com]
Sent: Wednesday, September 09, 2015 3:29 PM
To: Rob G Daly
Cc: Mark Bright; Power, Brian (BPower@republicservices.com); Graves, Stephen; LaFata, Natalie
Subject: RE: Bridgeton PS No. 1 Common Standard Operating Procedure (SOP) Review Request

Rob
I am working towards the one number idea and will have that resolved and to you as an update to the appendix as soon as I get that one number established and in the system. I will take a look at the edits and final it back to you in the next couple of days.

Sincerely,

Kevin T. Kamp, P.E. / Principal
Civil & Environmental Consultants, Inc.
4848 Park 370 Blvd., Suite F · Hazelwood, MO 63042
Toll-Free: 866-250-3679 · Direct: 314-656-4570 · Fax: 314-656-4595 ·
Mobile: 314-397-0414 · http://www.cecinc.com
Senior Leadership · Integrated Services · Personal Business Relationships

---

From: Rob G Daly [mailto:rdaly@stlmsd.com]
Sent: Wednesday, September 09, 2015 3:19 PM
To: Kamp, Kevin
Cc: Mark Bright; Power, Brian (BPower@republicservices.com); Graves, Stephen; LaFata, Natalie
Subject: Bridgeton PS No. 1 Common Standard Operating Procedure (SOP) Review Request

Kevin

Overall- looks fine. See very very minor revisions in draft attached. If you have any issues with them- please say so but they are exclusively spelling, grammar issues. Unless you specifically say you have issues with those minor revisions- I was planning on issuing the 'final' accepted version soon with these small revisions. Last markups by me I promise.

However.. one thing does remain

We had talked about Bridgeton providing that 24-7 'Board Operator' contact number inserted into this before we finalize it.

Can we get that contact number provided and I will then insert in table, call this SOP final?

Our suggestion: Have you Board Operators use only one phone- that is how we do it. Phone belongs to the position- not the individual. Keeps it simple. Other folks use call services that are the 24-7 part and the call service then owns the responsibility of calling the phone tree until someone answers. If you have a different way- we are open to it. Just trying to centralize this to one key point of contact for routine issues in particular. We appreciate the fact that Natalie is willing

to answer the phone at 0300 to coordinate letting in a District Maint Tech who forgot his keys but probably not the ideal way to do it.

Let me know what you think. If still possible to get that last minor issue resolved- we can wrap this up this week and I will then post it with our Lemay Board folks and in our shared drive for reference by our supervisory chain and field staff. I will also throw a calendar invite on the calendar for 3-6 months out to do a cursory review of existing SOP- just as a reminder to all of us to ask ourselves the question, 'is this working as is or does it require revision –based on experience?'

Rob Daly, P.E.
Division Manager- Pump Stations
Department of Operations
Metropolitan St Louis Sewer District
1025 Grand Glaize Parkway
Valley Park, MO 63088-1952
(636) 861-6706 (Office)

rdaly@stlmsd.com

From: Kamp, Kevin [mailto:kkamp@cecinc.com]
Sent: Tuesday, September 08, 2015 4:20 PM
To: Rob G Daly; LaFata, Natalie
Cc: Mark Bright; Power, Brian (BPower@republicservices.com); Graves, Stephen
Subject: RE: Bridgeton PS No. 1 Common Standard Operating Procedure (SOP) Review Request

Rob,
See the attached draft for review

Sincerely,

Kevin T. Kamp, P.E. / Principal
Civil & Environmental Consultants, Inc.
4848 Park 370 Blvd., Suite F · Hazelwood, MO 63042
Toll-Free: 866-250-3679 · Direct: 314-656-4570 · Fax: 314-656-4595 ·
Mobile: 314-397-0414 · http://www.cecinc.com
Senior Leadership · Integrated Services · Personal Business Relationships

---

From: Rob G Daly [mailto:rdaly@stlmsd.com]
Sent: Friday, September 04, 2015 11:44 AM
To: Kamp, Kevin; LaFata, Natalie
Cc: Mark Bright
Subject: RE: Bridgeton PS No. 1 Common Standard Operating Procedure (SOP) Review Request

Kevin

We looking good to get this wrapped up today? We were not talking large scale changes and it looked like we dealt with most revisions on the spot.

Rob Daly, P.E.
Division Manager- Pump Stations
Department of Operations
Metropolitan St Louis Sewer District
1025 Grand Glaize Parkway

Valley Park, MO 63088-1952
(636) 861-6706 (Office)

rdaly@stlmsd.com

From: Rob G Daly
Sent: Tuesday, September 01, 2015 8:23 AM
To: 'Kamp, Kevin'; LaFata, Natalie; Koziatek, Dan
Cc: Mark Bright
Subject: RE: Bridgeton PS No. 1 Common Standard Operating Procedure (SOP) Review Request

Kevin

I accepted the overwhelming majority of your changes. See my few revisions and lets talk later this mng.

Rob Daly, P.E.
Division Manager- Pump Stations
Department of Operations
Metropolitan St Louis Sewer District
1025 Grand Glaize Parkway
Valley Park, MO 63088-1952
(636) 861-6706 (Office)

rdaly@stlmsd.com

From: Kamp, Kevin [mailto:kkamp@cecinc.com]
Sent: Monday, August 31, 2015 9:45 AM
To: Rob G Daly; LaFata, Natalie; Koziatek, Dan
Cc: Mark Bright
Subject: RE: Bridgeton PS No. 1 Common Standard Operating Procedure (SOP) Review Request

Rob,
Attached is the revised SOP draft for further discussion. This is by no means in its final form but getting closer. To make it cleaner I also did a compare so you can see the changes from your first document. Please let me know when we can get the small group together to go through this. Thanks

Sincerely,

Kevin T. Kamp, P.E. / Principal
Civil & Environmental Consultants, Inc.
4848 Park 370 Blvd., Suite F · Hazelwood, MO 63042
Toll-Free: 866-250-3679 · Direct: 314-656-4570 · Fax: 314-656-4595 ·
Mobile: 314-397-0414 · http://www.cecinc.com
Senior Leadership · Integrated Services · Personal Business Relationships

---

From: Rob G Daly [mailto:rdaly@stlmsd.com]
Sent: Tuesday, August 25, 2015 2:35 PM
To: LaFata, Natalie; Kamp, Kevin; Koziatek, Dan
Cc: Mark Bright
Subject: Bridgeton PS No. 1 Common Standard Operating Procedure (SOP) Review Request

Natalie (and others)

This is a draft version of a high level SOP that is mean to be a 'common' SOP betwixt us and you. It is not meant to be permit linked or based or have the force of regulatory compliance- just mean to be common guidelines that define our interactions with each other at the lowest possible level. My goal is to-once finalized between all parties- put signatures of me, Mark Bright and our 2 equivalents (Natalie and Mark K.) at the pre-treatment plant to this and call it our 'common' SOP.

Our staff will 'live' in the safety plan that we developed (see attached separate safety plan for reference only) and this SOP will be briefed them and they will know where it lives on our shared drive but this is not a day to day thing for them- it is too large. The intent will be we (District Ops personnel and Landfill Ops personnel) meet semi-annually to review and see if any revisions to this proposed SOP are necessary.

Can I ask you for a review and to provide any comments- if at all possible**- before end of this week?** Then we can finalize last round version by say Monday and try to sign it and finalize it before our planned field trip to your site Thursday of next week. I apologize for short timeline- just trying to wrap up a lot of these Bridgeton items so we can get this relationship 'normalized' as quickly as possible. If that timeline is not doable- I will take what can get and be grateful for it.

If it is in 'red'- it is largely written by us in MSD Ops. If not red- I copied it from one of the three previously submitted SOP's you at the landfill already submitted in the past.

If you want to teleconference or meet at your place to review this- call and let me or Mark Bright know and we will trundle out to you ASAP.

Your help is greatly appreciated. Thank you.

Also- please ignore all the outline errors throughout document- I know it looks rough. I will clean that up once we figure out final content. Asking for a content review in other words- not grammar and exposition or organizational.

Rob Daly, P.E.
Division Manager- Pump Stations
Department of Operations
Metropolitan St Louis Sewer District
1025 Grand Glaize Parkway
Valley Park, MO 63088-1952
(636) 861-6706 (Office)

rdaly@stlmsd.com

Common Operations and Maintenance Standard Operating Procedures MSD/Bridgeton Landfill

TABLE OF CONTENTS

Page

1.0 Purpose 1
- 1.1 Introduction (Pump Station and Force Main Key Characteristics) 1
- 1.2 Pump Station Operations 2
  - 1.2.1 District Asset Operations 2
  - 1.2.2 Landfill Asset Operations 3

2.0 Force Main Odor Mitigation 5
- 2.1 Control Measures 5
  - 2.1.1 Force Main Residence Time 5
  - 2.1.2 Nitrate Addition 5
  - 2.1.3 Iron Salt Addition 6
- 2.2 Liquid Phase Sampling and Performance Monitoring 6

3.0 Bridgeton Pump Station No. 1 7
- 3.1 Purpose 7
- 3.2 Site Access – Bridgeton PS No. 1 and Bridgeton Landfill 7
- 3.3 Risk Mitigation Plan – Bridgeton Pump Station No. 1 7
  - 3.3.1 Introduction 7
  - 3.3.2 Engineering Controls 8
  - 3.3.3 Ventilation (District Operations Personnel) 9
  - 3.3.4 Personal Protective Equipment (PPE) (District Operations Personnel) 9
- 3.4 Communications – Status Reporting 11

APPENDIX (TABLES)

1-1 MSD Lemay Board Contact Data
1-2 Pump Station Operations Personnel
1-3 Bridgeton Landfill Operations Personnel

1.0 PURPOSE

This document is intended to serve as the common Standard Operating Procedure (SOP) for MSD (the 'District') Operations Department (Pump Station Division/County Pump) personnel and Bridgeton Landfill (the "Landfill") operations staff personnel and is intended to standardize procedures across both organizations in such a way that it enhances and maximizes the collaboration, coordination, and communication required to successfully, and safely, operate and maintain the discharge and pumping system that conveys pre-treated wastewater from the landfill on-site pre-treatment plant to District wastewater treatment facilities. It includes procedures that apply at the following District assets: Bridgeton Pump Station 1, 2, and 3, the associated force main, and Westlake Pump Station.

This procedure is meant to provide guidance for the conduct of routine operations to the personnel of both entities involved in the operations and maintenance of landfill facilities and the discharge from the facility through the MSD assets, Bridgeton Landfill, LLC. and the MSD respectively. This operating procedure outline is in no way intended to create nor does it create any enforceable rights, remedies, entitlements or obligations. This document is intended to be a living document, utilized mutually by both parties' operational personnel and will be periodically reviewed and revised as needed for considerations such as changes in operating conditions or changes in personnel.

The goal of this Standard Operating Procedure (SOP) is to ensure that routine operation and maintenance activities undertaken by District personnel on the District assets are conducted in a safe working environment. This goal will be met by establishing common standardized procedures that define roles and responsibilities of key personnel, and provide key points of contact for both entities.

1.1 INTRODUCTION (PUMP STATION AND FORCE MAIN KEY CHARACTERISTICS)

The overall system consists of the following components:

Bridgeton Pump Station #1 (P-832)
Bridgeton Pump Station #2 (P-833)
Bridgeton Pump Station #3 (P-834)
SSO BP-597
Westlake Pump Station and Bonfils Force Main (to Missouri River Treatment Plant)
Bridgeton-Bissell Force Main (to Bissell Treatment Plant)
District collection system assets (Corporate Exchange Industrial Park)

Pump Station(s) 1,2, and 3 on the Bridgeton-Bissell Force Main are comprised of concrete structures (wet well, valve vault, bypass pump connection), pumps, electrical equipment, and controls that convey pretreated wastewater from the Bridgeton Landfill through an 8" diameter HDPE force main to the District's Bissell Point Treatment Plant collection system. Wastewater flows conveyed through the pump stations and force main also include volumes of wastewater flows from the tributary watershed, i.e. the Corporate Exchange industrial park. SSO BP-597 is a Constructed SSO overflow point on the District collection system at a point downstream from where the force main discharges into the collection system. Westlake Pump Station is an existing District pump station originally designed and constructed to convey flows from both the upstream industrial park, as well as the landfill flows. During disinfection season (March 1st through October 31st) this pump station serves only as a 'contingency' facility for the wastewater flow conveyed from the industrial park. During non-disinfection season flows from both the landfill and the industrial park may be directed to Westlake pump station, at the discretion of the District, for final treatment and disposal at the Missouri River Treatment Plant.

1.2 PUMP STATION OPERATIONS

1.2.1 District Asset Operations

This narrative establishes the fundamental aspects of overall, combined system operation (pump stations 1-3 and the associated force main). This logic is built into the Programmable Logic Controllers (PLC's) that operate the system. The system operates in "Automatic" mode, but all pump stations in the system can also be operated locally at the pump station site.

Wastewater enters the wet well of Bridgeton pump station No. 1, which pumps wastewater through the force main to Bridgeton pump station No. 2, which then pumps wastewater to Bridgeton pump station No.3. Bridgeton pump station No. 3 pumps wastewater into a discharge manhole in the District's collection system (the Maline system), where it is ultimately conveyed to the District's Bissell Pointe Treatment Plant. SSO BP-597 is located downstream of the discharge manhole. At the District's discretion, wastewater can also, alternatively or temporarily, diverted to the Cold Water Creek Treatment Plant. The District will notify the Landfill should this change occur. Bridgeton pump station No. 2 and No. 3 communicate via a radio communications link to Bridgeton pump station No.1. In the event of a failure at either pump station No. 2 or pump station No.3, a failure that would take the facility Out of Service (OOS), Bridgeton pump station No. 1 will automatically also shut down, valves upstream of the Bridgeton pump station No. 1, and within the Bridgeton Landfill footprint, will be actuated, by Landfill personnel, and will then hold all Landfill pretreated effluent flow to the on-site 97,000 gallon discharge tank. The Landfill will then utilize other

redundant on-site storage capacity until such time as District pump station(s) are placed back in service.

District (Constructed) SSO BP-597 also communicates with the Bridgeton pump station No. 3. In the event that the SSO site activates, typically during a significant rain event, it communicates, via a radio communications link, to Bridgeton pump station No. 3, and the Bridgeton pump station No.3 PLC places the facility (temporarily) out of service (OOS). This in turn places upstream facilities, OOS. Once the rain event is over and the SSO site is no longer active, the operations sequence operates in reverse and allows Landfill wastewater flows to revert to normal operating mode.

In the event that District assets placed OOS for an extended period of time, wastewater flows can be directed to Cold Water Creek Treatment Plant by changing valve positions along the force main, or diverted to Westlake pump station, and conveyed from there to the Missouri River Treatment Plant. These temporary diversions of flow will be initiated at Valve Junction Box #101 (located inside the West Lake pump station fencing) using electrical actuators controlled at the Bridgeton pump station No. 1 control panel or manually at the valve vault on the Bridgeton-Bissell force main system.

In addition, it is possible, but only as a contingency plan and with significant advance coordination with District personnel, to shift Landfill wastewater to the Westlake pump station, and from there, to the Missouri River Treatment Plant. This option is only feasible during specific date ranges, during designated non-disinfection periods at the Missouri River Treatment Plant (October thru March).

1.2.2 Landfill Asset Operations

The Bridgeton Landfill internal SCADA system is interfaced to the District SCADA system in order to provide required information to adequately store pretreatment plant effluent and to properly notify Landfill personnel of the operating status of the District assets that convey Landfill wastewater via District assets.

The District facility alarm status changes that Landfill has routed to its internal SCADA system are summarized as follows:

A01: PS1 Wet Well High Level
A02: PS1 AC Failure
A03: Comm. Failure Any Station
A04: SSO Overflow
A05: Pump Station Inhibit by MSD

If an alarm occurs that places District facilities OOS, the following Landfill procedure shall be followed:

1. Landfill receives notification of District asset alarm status change. Landfill discharge ceases upon receipt of alarm that places District assets OOS.

2. Landfill personnel contact full time District Lemay Board personnel to review alarm status change and coordinate with District personnel to determine estimated duration of District asset service outage, if any. District personnel shall keep the Landfill briefed on the status of outage and for long duration outages will collaborate with Landfill in assessing options for restoring discharge, i.e. Cold Water Creek or Missouri River Treatment Plant(s).

2.0 FORCE MAIN ODOR MITIGATION

The objective is to minimize the occurrence of preventable, downstream, objectionable odors within the force main system and to minimize the impact of these objectionable odors to both the public immediately adjacent to District assets, and to District Operations personnel.

These objectives can be attained by preventing the formation of these odors within the force main system by minimum flow controls and chemical additives at the Landfill before discharge.

2.1 CONTROL MEASURES

These measures should be considered dynamic and will be revised as necessary, and in consultation with District Operations personnel.

2.1.1 Force Main Residence Time

Minimizing the residence time will minimize the potential formation of odors. The Landfill will attempt to maintain a maximum residence time in the force main of ten (10) hours. The Landfill will add flush water to the discharge from the plant to achieve a minimum flow should the Landfill effluent production rate not meet this minimum volumetric flow rate requirement.

Should the pretreatment facility cease discharge for a period of time, the Landfill will flush the force main (approximately 100,000 gallons from the discharge) after such outage greater than four hours from the plant or a scheduled significant outage or stoppage in the force main system.

The Landfill will notify the District Lemay Board of significant outage (greater than 6 hours) within 4 hours. Voice or email is acceptable.

The District will notify the Landfill in the event they have an extended disruption of service in excess of four (4) hours. Should this notification be received, the Landfill will attempt to get enough flush water transmitted into the main prior to the planned shutdown to help reduce the potential for odors during and after that event.

2.1.2 Nitrate Addition

To help prevent the formation of preventable, objectionable odors, the Landfill will add Sodium Nitrate to the pretreatment effluent. This occurs after the pretreatment process inside the plant building directly before discharging from the plant to the discharge storage tank. The

rate of dosing is based on the flow rate and oxygen demand of the pretreated effluent. The objective is to maintain a nitrate residual at the end of the force main. Significant dosing rate changes will be communicated to District Operations personnel.

2.1.3 Iron Salt Addition

The Landfill can also add ferric chloride (or other iron salts) to the effluent to react with dissolved sulfide that may be present in the effluent. The dosing rate will be based on effluent quality and flow rate. Significant dosing rate changes will be communicated to District Operations personnel.

2.2 LIQUID PHASE SAMPLING AND PERFORMANCE MONITORING

The Landfill will collect liquid samples from the end of the force main for operational sampling monthly (or more frequently if needed). The in-house operational laboratory will analyze this sample for COD, Nitrate, and Sulfide to validate and/or adjust dosing rates accordingly.

3.0 BRIDGETON PUMP STATION NO. 1

3.1 PURPOSE

The objective is to provide guidance for District Operations personnel and Landfill personnel in how to conduct routine day to day operations in such a way that overall system function of pump station No. 1, located within the physical footprint of the Bridgeton Landfill site, is maintained at an acceptable level of service while providing District Operations personnel access to a safe work environment so that routine operation and maintenance activities undertaken by District personnel at Bridgeton pump station No. 1 facility can be conducted.

This will be achieved via established, common, standardized procedures, and clearly defined personnel roles and responsibilities for both parties. Additionally, to mitigate risk to District Operations personnel engaged in the execution of routine activities, the District and Landfill will collaboratively implement a risk mitigation plan that includes: engineering controls, administrative controls, and the utilization of personal protective equipment (PPE), to provide access to a safe work environment as specifically detailed in this section of the SOP.

3.2 SITE ACCESS – BRIDGETON PS NO. 1 AND BRIDGETON LANDFILL

District personnel shall access the Bridgeton pump station No. 1 site through the adjacent Bridgeton Landfill entry gate located at 13901 Boenker Lane. This gate is 'daisy-chained' with a District provided lock so that District Operations personnel can gain access to the Bridgeton pump station No. 1 site at any time. If required, District personnel can also contact the personnel on the attached list of Landfill pre-treatment plant contacts in order to gain access to the Landfill site.

Landfill personnel will not access any components of the Bridgeton pump station No. 1 site without prior approval of District Operations personnel and will not attempt to enter, operate, or maintain any component of the overall system belonging to the District, e.g. pump station valves, wet wells, gate operators, or control panels without such permission. The District will likewise not access any portion of the site outside of Bridgeton pump station No. 1 without first having the approval from Landfill personnel.

3.3 RISK MITIGATION PLAN – BRIDGETON PUMP STATION NO. 1

3.3.1 Introduction

Sampling and testing conducted during the construction phase of the facility indicated the presence of volatile organic compounds (VOCs) within the subsurface structures of Bridgeton pump station No. 1. The presence of these constituents is suspected to be the result of landfill

gas migration through the native soil matrix within which Bridgeton pump station No. 1 was constructed. Engineering controls consisting of an engineered vacuum trench and expanded gas collection infrastructure in this area of the site have been installed to mitigate this migration. This system is designed to function as a barrier between any potential landfill gas migration and the station site itself. In addition, the Landfill and the District have constructed additional redundant engineering controls to mitigate potential risk to District Operations personnel engaged in the pursuit of their normal duties. Additional administrative controls (which consist of this SOP), and the utilization of proper PPE, have also been integrated into the overall District Safety plan for the site.

3.3.2 Engineering Controls

3.3.2.1 Air Quality Engineering Controls – Background

To mitigate the potential of subsurface landfill gas migration into the vicinity of the Bridgeton pump station No. 1 a subsurface gas collection system was installed to intercept any gas before it could potentially enter the vicinity of Bridgeton pump station No. 1. During installation of Bridgeton pump station No. 1, a subsurface collection system was installed along the north and east side of the pump station wet well and valve vault. This is a "french drain" style engineered vapor extraction system, design to actively extract soil gases and any condensate generated. The soil gas vapor extraction rate is controlled by wellhead valves and is operated to maintain combustible gas levels below LEL. This system has preventive maintenance checks and services performed, and documented, at a minimum of a weekly basis, along with the surrounding monitoring probes.

The vacuum for the soil vapor extraction is provided from Bridgeton Landfill's comprehensive Gas Collection and Control System (GCCS), which provides vacuum and transport of the extracted gases to its utility flares for disposal/destruction. The GCCS is operated on a 24/7 basis, with redundancies and backup power.

3.3.2.2 Air Quality Engineering Controls (Landfill Operations Personnel)

The installed vacuum trench adjacent to Bridgeton pump station No. 1 is to be inspected and maintained as any other critical portion of the GCCS. This includes periodic scheduled reviews of the Landfill SCADA system and the electronic monitoring and notification system. In addition, Landfill personnel will perform, at a minimum, weekly direct read well head vacuum readings, verify gas extraction infrastructure integrity, and provide operation of this portion trench as a component of the overall GCCS. Technicians are on-call 24/7 and shall respond to technical disruption related to the vacuum trench, or associated GCCS components, immediately, as is required of any critical component of the GCCS.

3.3.2.3 Air Quality Engineering Controls Operational Status Monitoring (District Operations Personnel)

The vacuum gas extraction system is equipped with a local monitoring system consisting of a vacuum gauge displaying vacuum on the trench in inches of water column and with local green and red lighting to indicate (local) operational status. The lighting indicates adequate vacuum (green) or not operational/potentially inadequate vacuum (red). This is inspected as part of Bridgeton Landfill daily site checks and is readily visible from Bridgeton pump station No. 1.

In addition, this status of 'operational' or 'non-operational' is communicated to the District SCADA system so that District Operations staff personnel can identify system operating status prior to responding to any maintenance issues at Bridgeton pump station No. 1. If the system is non-operational, District staff will be instructed to NOT respond to maintenance issues at the Bridgeton pump station No. 1 site until the system is restored to operational status.

3.3.3 Ventilation (District Operations Personnel)

The Bridgeton pump station No. 1 valve vault will have an air handling fan unit installed in the vault that is designed to activate automatically once the valve vault hatch lids are opened. District Operations personnel will, prior to conducting any required work inside the valve vault, open the hatch lids and allow the vault area to ventilate for a minimum period of fifteen (15) minutes prior to entering the area.

Any personnel entering into the wet well area, or any other force main appurtenance structure (ARV structure), will be conducted in accordance with normal District Confined Space Entry policies.

3.3.4 Personal Protective Equipment (PPE) (District Operations Personnel)

All MSD employees are to utilize the following personal PPE when working at, or in the immediate vicinity of, Bridgeton pump station No.1:

- Personal 4-gas monitor
- Photo-Ionization Detector (PID)
- Hard Hat
- Safety Vest
- Safety glasses
- Safety Shoes

Prior to any work commencing at site, District Operations personnel will perform the following tasks, in the following sequence:

1. First, verify that the vacuum gas extraction system is functional-or else work will not commence and District Operations personnel will not dispatch to the site.

2. Second, they will ventilate the valve vault, if work is to occur in this area, for a minimum of fifteen (15) minutes before continuing.

3. Third, if work is to occur in the valve vault, District Operations personnel will utilize their assigned 4 gas monitor to check the work site before entering the valve vault area.

4. Lastly, if work is to occur in the valve vault, District Operations personnel will utilize the assigned PID instrument to assess site conditions in the valve vault prior to entry.

3.3.4.1 Use of the Photo-Ionization Detector (PID)

If the instrument alarms during use and Bridgeton Landfill staff are available, District Operations personnel will contact Landfill Operations personnel and ask them to come to site and verify District instrument readings with Landfill PID (same as District's instrument). If Landfill personnel are not available District Operations personnel will depart the site and inform their Operations Supervisor as soon as possible after the event.

If the instrument alarms during use and this information **is** validated by Landfill personnel, District Operations personnel will cease work at the site, depart the site, and will advise their Operations Supervisor as soon as possible.

Regardless, if instrument alarms during use at any time, District Operations personnel return it to District shop for re-calibration and data download.

If the instrument detects any benzene during use, but below alarm limits, District Operations personnel will re-ventilate, re-assess the site conditions and utilize their professional judgment as to whether or not to continue working at the site.

Regardless, if instrument detects any benzene during use, but below alarm limits, District Operations personnel will return it to District shop for re-calibration and data download.

3.4 COMMUNICATIONS – STATUS REPORTING

The Landfill Pre-Treatment Plant operations staff personnel will provide intermittently submitted, 'change of status', email updates, distributed to pre-defined distribution lists of District personnel. The following change of status items are requested and are of interest to District Operations personnel:

- Landfill Pre-Treatment Plant service outages, planned or un-planned, of significant duration, i.e. four (4) hours duration or longer. If planned- a minimum of one working day advance notice is requested.
- Significant process changes that could adversely impact the District conveyance system (force main or pump stations) either hydraulically or chemically.
- Significant volumetric flow rate changes. The average daily flow is anticipated to be 275,000 Gallons per Day (GPD) and notification will be made if this deviates by more than 125,000 GPD (both increases and decreases).
- Significant changes to chemical dosing rates, intended for odor control reduction purposes. If any odor control products are substituted for an existing product, the Landfill needs to submit a Safety Data Sheet to District Operations personnel (Attn: Mark Bright, Operations Supervisor-County Pump) within 24 hours of using the new product.

District Operations staff personnel will notify Landfill operations staff personnel of the following:

- District facility service outages, planned or un-planned, of significant duration, i.e. four (4) hours duration or longer that would require Landfill personnel to cease discharge to the District conveyance system and utilize on-site storage capacity. If planned, a minimum of one working day advance notice will be provided.

It is critical that contact lists of key personnel be updated as personnel changes occur in each organization.

APPENDIX

Table 1-1 District (Pump Station Division) Lemay Board Personnel

Title	Personnel	Phone numbers	
		Work	Mobile
Lemay Board	**24-Hour Maintenance Dispatchers**	**(314) 638-5877**	**(314) 267-2168**

Table 1-2 District Pump Station Division Operations Personnel

Title	Personnel	Phone numbers	
		Office (Primary)	Mobile (Alternate)
Operations Division Manager-Pump Stations	**Rob Daly**	**(636) 861-6706**	**(314) 267-6179**
Operations Supervisor-County Pump	**Mark Bright**	**(636) 861-6735**	**(314) 267-3491**
Planner/Scheduler-County Pump	**Mike Waxman**	**(636) 861-6736**	**(314) 267-3648**
Pump Station Division Engineer	**Jay Kniker**	**(314) 436-8703**	**(314) 267-0663**
Pump Station Maintenance Tech	**Jeff Jones**		**(314) 267-3496**
Instrumentation/Electrical Tech	**Kevin George**		**(314) 240-0761**

Table 1-3 Bridgeton Landfill Operations Personnel

Title	Personnel	Phone numbers	
		Mobile (Primary)	Work/Office
CEC – Pretreatment Plant 24/7 Operations Staff	***On Duty Operator***	**(314) 330-8502**	-
CEC – Pretreatment Plant Manager	**Natalie LaFata**	**(314) 341-3375**	**(314) 447-3627**
CEC – Pretreatment Plant – 24 Hour Operations	**Steve Graves**	**(314) 330-7512**	**(314) 447-3628**
CEC – Pretreatment Plant Maintenance Supervisor	**Mark Kohrt**	**(630) 955-5541**	**(314) 447-3627**
Bridgeton Landfill, LLC – Environmental Specialist	**Derek Bouchard**	**(314) 302-3634**	**(314) 656-2114**
Bridgeton Landfill, LLC – Operations Manager	**Tim Johnson**	**(818) 822-2633**	**(314) 744-8165**
Bridgeton Landfill, LLC – Environmental Manager	**Brian Power**	**(618)410-0157**	**(314) 744-8165**

Doug Mendoza

From: Ed Galbraith <EGalbraith@barr.com>
Sent: Wednesday, September 16, 2015 8:00 AM
To: Doug Mendoza; John Lodderhose; Brian G. Gibson; Michael Grace; Nora C. Estopare; Rob G Daly; 'Tippett Mosby, Leanne (Leanne.TippettMosby@dnr.mo.gov)'; 'Aaron Schmidt'; 'Nagel, Chris (Christopher.Nagel@dnr.mo.gov)'; 'bpower@republicservices.com'; 'Getting, James'; 'Bouchard, Derek (DBouchard@republicservices.com)'; 'Kamp, Kevin'; 'LaFata, Natalie'; 'Cooper, Ivan (icooper@cecinc.com)'; 'lwright@cecinc.com'; Kelly Caddy; Dana B. Pasi; Christopher J. Bulmahn; Ken Gambaro; Mike Townley; 'lwright@cecinc.com'; Andrea A. Nord; Becca Coyle; 'koleary@cecinc.com'; 'sgraves@cecinc.com'; 'awyatt@herstassociates.com'
Subject: Bridgeton Landfill Weekly Report

CB
9-18

The reports have been posted to the FTP site.

The revised BOD result for T1-133-AS (8/24/2015) is 370 mg/l, based on an average BOD:COD ratio for the two samples immediately before and after. There is a tab in the spreadsheet with the calculation.

The FTP site can be accessed as follows:

Copy this link and paste it into Windows Explorer (NOT Internet Explorer) ftp://ftp.barr.com/bridgetonlandfill/2015%20Reports/
User: blfdata;
Password: tran$fer!

Ed Galbraith

Senior Environmental Consultant
Jefferson City office: 573.638.5024
cell: 573.418.5562
egalbraith@barr.com
www.barr.com

resourceful. naturally. BARR

Sample	Date	[illegible]	Report	BOD [illegible]	[illegible]	BOD/COD	[illegible]
T1-134-AS	8/27/2015	PDC	5084494	**430**	**3000**	0.14	
T1-133-AS	8/24/2015	PDC	5083929	**210 ***	**2300**		370
LPTP-014	8/20/2015	Pace	60201173	**445**	**2490**	0.18	

Table 1

					Parameter	Biochemical Oxygen Demand (5-day)	Chemical Oxygen Demand	Cyanide	Nitrogen, ammonia as N	Oil and Grease	
					Total or Dissolved	NA	NA	NA	NA	NA	NA
Location	Date	Sample Collection Time	Lab Name	Data Status	Lab Report	mg/l	mg/l	mg/l	mg/l	mg/l	pH units
T1-136-AS	9/03/2015	6:15 AM	PDC	Validated	5090570	49	2400	--	--	--	--
T1-136-AS	9/03/2015		Field	No QC	WASTE_2015	--	2520	--	--	--	8.43
T1-135-AS	8/31/2015	5:15 AM	PDC	Validated	5084858	140	4800	--	--	--	--
T1-135-AS	8/31/2015		Field	No QC	WASTE_2015	--	1890	--	--	--	7.73
T1-134-AS	8/27/2015	6:15 AM	PDC	Validated	5084494	430	3000	--	--	--	--
T1-134-AS	8/27/2015		Field	No QC	WASTE_2015	--	1900	--	--	--	8.36
HW	8/26/2015		Field	No QC	WASTE_2015	--	2440	--	--	--	7.91
HW	8/25/2015		Field	No QC	WASTE_2015	--	2850	--	--	--	8.21
T1-133-AS	8/24/2015	6:15 AM	PDC	Validated	5083929	~~210~~ *	2300	--	--	--	--
T1-133-AS	8/24/2015		Field	No QC	WASTE_2015	--	1600	--	--	--	8.11

370 (see attached calc.)

entered on 9-02-15 report.
OB

MSD 033511

Table 1

					Parameter	Phenolics	Solids, total suspended	Temperature, °C	Total Toxic Organics	Ultraviolet absorbance at 254 nm	Antimony	Arsenic
					Total or Dissolved	NA	NA	NA	NA	NA	Total	Total
Location	Date	Sample Collection Time	Lab Name	Data Status	Lab Report	mg/l	mg/l	deg C	ug/l	cm-1	mg/l	mg/l
T1-136-AS	9/03/2015	6:15 AM	PDC	Validated	5090570	--	3800	--	--	--	--	--
T1-136-AS	9/03/2015		Field	No QC	WASTE_2015	--	7840	40.6	--	--	--	--
T1-135-AS	8/31/2015	5:15 AM	PDC	Validated	5084858	--	10000	--	--	--	--	--
T1-135-AS	8/31/2015		Field	No QC	WASTE_2015	--	7260	37.2	--	--	--	--
T1-134-AS	8/27/2015	6:15 AM	PDC	Validated	5084494	--	11000	--	--	--	--	--
T1-134-AS	8/27/2015		Field	No QC	WASTE_2015	--	3400	37.5	--	--	--	--
HW	8/26/2015		Field	No QC	WASTE_2015	--	11760	32.9	--	--	--	--
HW	8/25/2015		Field	No QC	WASTE_2015	--	8820	36.7	--	--	--	--
T1-133-AS	8/24/2015	6:15 AM	PDC	Validated	5083929	--	3400	--	--	--	--	--
T1-133-AS	8/24/2015		Field	No QC	WASTE_2015	--	6620	38.6	--	--	--	--

MSD 033512

Doug Mendoza

From: Ed Galbraith <EGalbraith@barr.com>
Sent: Tuesday, September 15, 2015 8:18 PM
To: Doug Mendoza
Subject: RE: Question re. Bridgeton Landfill's metered discharge vs. calculated discharge

Hi Doug, I've been out of the office most of this week so far. I saw this before I left yesterday and forgot to circle back. I'll be out tomorrow as well, but I'll forward this and hopefully get back to you on Thursday.

Ed Galbraith

Senior Environmental Consultant
Jefferson City office: 573.638.5024
cell: 573.418.5562
egalbraith@barr.com
www.barr.com

resourceful. naturally. BARR

From: Doug Mendoza [mailto:DMENDOZA@stlmsd.com]
Sent: Monday, September 14, 2015 9:17 AM
To: Ed Galbraith
Subject: Question re. Bridgeton Landfill's metered discharge vs. calculated discharge

Ed,

I am having a difficult time finding any correlation between the metered discharge and the calculated discharge. I believe that you had previously told me the calculated discharge was based on the metered discharge reading about 0.61 of the true volume. Now the metered is often less than the calculated discharge. Would you please let me know how it is currently being calculated, and why it is being done that way? I am not finding any communication regarding cleaning/replacing/recalibrating the meter or other changes. I'm also not sure how the potable water to the force main is being accounted for. Remember that Bridgeton Landfill is being billed only for discharge volume, not any incoming water usage.

Doug

		Metered Discharge	Calculated Discharge	
Total of Applied Permit Limitation Discharge Threshold		NA	NA	
Location	Date	gal	gal	
MH013	8/31/2015	277090	269377	0.972164
MH013	8/30/2015	289830	162446	0.560487

Doug Mendoza

From: Doug Mendoza
Sent: Monday, September 14, 2015 9:17 AM
To: Ed Galbraith (EGalbraith@barr.com) (EGalbraith@barr.com)
Subject: Question re. Bridgeton Landfill's metered discharge vs. calculated discharge

Ed,

I am having a difficult time finding any correlation between the metered discharge and the calculated discharge. I believe that you had previously told me the calculated discharge was based on the metered discharge reading about 0.61 of the true volume. Now the metered is often less than the calculated discharge. Would you please let me know how it is currently being calculated, and why it is being done that way? I am not finding any communication regarding cleaning/replacing/recalibrating the meter or other changes. I'm also not sure how the potable water to the force main is being accounted for. Remember that Bridgeton Landfill is being billed only for discharge volume, not any incoming water usage.

Doug

Parameter		Metered Discharge	Calculated Discharge	
Total or Dissolved		NA	NA	
Limitation Surcharge Threshold				
Location	Date	gal	gal	
MH013	8/31/2015	277090	269377	0.972164
MH013	8/30/2015	289830	162446	0.560487
MH013	8/29/2015	75560	232399	3.075688
MH013	8/28/2015	253370	234928	0.927213
MH013	8/27/2015	255140	192950	0.756251
MH013	8/26/2015	196710	124531	0.633069
MH013	8/24/2015	253144	225542	0.890963
MH013	8/23/2015	245336	249131	1.015469
MH013	8/22/2015	271208	254893	0.939843
MH013	8/21/2015	277540	260798	0.939677
MH013	8/20/2015	281248	272434	0.968661
MH013	8/19/2015	295892	278469	0.941117
MH013	8/18/2015	303312	279920	0.922878
MH013	8/17/2015	303972	281152	0.924927
MH013	8/16/2015	305152	282400	0.92544
MH013	8/15/2015	307488	283958	0.923477
MH013	8/14/2015	308192	268059	0.869779
MH013	8/13/2015	293674	194512	0.66234
MH013	8/12/2015	211980	187437	0.88422

MH013	8/11/2015	206462	151075	0.731733
MH013	8/10/2015	164336	145442	0.885028
MH013	8/09/2015	157960	166871	1.056413
MH013	8/08/2015	187356	187356	1
MH013	8/07/2015	192804	247130	1.281768
MH013	8/06/2015	229516	245508	1.069677
MH013	8/05/2015	221140	268088	1.2123
MH013	8/04/2015	247428	245195	0.990975
MH013	8/03/2015	224032	229041	1.022358
MH013	8/02/2015	208048	258646	1.243203
MH013	8/01/2015	240940	43343	0.179891

Doug Mendoza

From: Ed Galbraith <EGalbraith@barr.com>
Sent: Friday, September 11, 2015 4:59 PM
To: Doug Mendoza; John Lodderhose; Brian G. Gibson; Michael Grace; Nora C. Estopare; Rob G Daly; 'Tippett Mosby, Leanne (Leanne.TippettMosby@dnr.mo.gov)'; 'Aaron Schmidt'; 'Nagel, Chris (Christopher.Nagel@dnr.mo.gov)'; 'bpower@republicservices.com'; 'Getting, James'; 'Bouchard, Derek (DBouchard@republicservices.com)'; 'Kamp, Kevin'; 'LaFata, Natalie'; 'Cooper, Ivan (icooper@cecinc.com)'; 'lwright@cecinc.com'; Kelly Caddy; Dana B. Pasi; Christopher J. Bulmahn; Ken Gambaro; Mike Townley; 'lwright@cecinc.com'; Andrea A. Nord; Becca Coyle; 'koleary@cecinc.com'; 'sgraves@cecinc.com'; 'awyatt@herstassociates.com'
Subject: RE: Bridgeton Landfill Weekly Report

Doug, per our conversation, this is to provide further information regarding the qualified results noted below.

- The UVT for 013 was resampled August 27. Results have not been received yet.
- BOD was not resampled because we were not aware of the qualifier until after the end of the month. In the future, we are changing our sampling timing to earlier in the month. We will also be splitting the next four samples (for BOD only) between Pace and PDC to increase our chance of getting a usable BOD result.
- There was also a qualified lab result for pH for MH013 August 18, 2015 (Pace Report 60200931). The sample was out of hold. The field readings are also included elsewhere in the spreadsheet. We are reconsidering lab analysis of pH because staff currently report daily field readings.

Let me know if you have any further questions.

Thanks.

Ed Galbraith

Senior Environmental Consultant
Jefferson City office: 573.638.5024
cell: 573.418.5562
egalbraith@barr.com
www.barr.com

resourceful. naturally. BARR

From: Ed Galbraith
Sent: Wednesday, September 09, 2015 11:43 AM
To: 'Doug Mendoza (DMENDOZA@stlmsd.com)'; 'John Lodderhose'; 'Brian G. Gibson (bgibson@stlmsd.com)'; 'Michael Grace'; 'Nora C. Estopare (nestopare@stlmsd.com)'; 'Rob G Daly (rdaly@stlmsd.com)'; 'Tippett Mosby, Leanne (Leanne.TippettMosby@dnr.mo.gov)'; 'Aaron Schmidt'; 'Nagel, Chris (Christopher.Nagel@dnr.mo.gov)'; 'bpower@republicservices.com'; 'Getting, James'; 'Bouchard, Derek (DBouchard@republicservices.com)'; 'Kamp, Kevin'; 'LaFata, Natalie'; 'Cooper, Ivan (icooper@cecinc.com)'; 'lwright@cecinc.com'; Kelly Caddy; Dana B. Pasi; 'Christopher J.

Doug Mendoza

Bridgeton Landfill

From: LaFata, Natalie <nlafata@cecinc.com>
Sent: Friday, September 11, 2015 3:22 PM
To: Rob G Daly; Mark Bright; Mike Waxman; Doug Mendoza; Jeff Jones; Kevin George
Cc: O'Leary, Kevin; Graves, Stephen; Kamp, Kevin; Kohrt, Mark; LaFata, Natalie
Subject: Plant Update 9-11-2015

The plant discharge is averaging 200+ GPM. The average amounts since the last Force Main/Plant Update are:

Date	**Permeate Produced** (gallons)	**Direct Discharge** (gallons)
9/04/2015	268,712	246,232
9/05/2015	290,168	199,672
9/06/2015	334,956	203,712
9/07/2015	317,256	232,931
9/08/2015	295,740	239,425
9/09/2015	340,746	218,320
9/10/2015	333,726	259,076

- When odors were checked at the force main, no odors were detected and H2S readings were 0.0-0.5ppm at the pump stations.
- Sodium Nitrate dosing is at 400gpd and Ferric Chloride is being introduced to the discharge manhole 013 at 0.6-1.5gph at this time.

Any questions, please feel free to contact me!

Have a great weekend!!

Natalie L. La Fata / Plant Manager
Civil & Environmental Consultants, Inc.
4848 Park 370 Blvd., Suite F · Hazelwood, MO 63042
Toll Free: (866) 250-3679 ext. 3626 · Fax: (314) 656-4595
Mobile: (314) 341-3375 · http://www.cecinc.com
Senior Leadership · Integrated Services · Personal Business Relationships

This electronic communication and any attachments are intended solely for the use of the person or entity to which it is addressed, and may contain information that is confidential, privileged and exempt from disclosure under applicable law, including copyright law. If you are not the intended recipient of this message, you are prohibited from disclosing, reproducing, distributing, disseminating or otherwise using this transmission. Please promptly notify the sender by reply electronic communication and immediately delete this message from your system.

TO: **File**

FROM: Angie McDonough amm

DATE: September 10, 2015

RE: **BRIDGETON LANDFILL LLC**
WASTEWATER USER CHARGE BILLING
ACCOUNT NUMBER 0039145-8

Pursuant to the MSD Industrial Wastewater Discharge Permit for the above referenced facility, please bill this facility for the following charges for the indicated billing period:

DISCHARGE PERIOD: **August 2015**

BILLING IS FOR: **On- Site Special Discharge**

SAMPLE POINT: **013 - Commingled landfill leachate and landfill gas collection system condensate.**

Billing Item	Quantity	Units	Rate	Charge
Volume	8,988	CcF	$ 3.21 /CcF	$28,851.48
COD Extra-Strength Surcharge	2,930	mg/L	$ 316.19 /ton	$20,659.59
Total	--	--	--	**$49,511.07**

If you have any questions, please call me at extension 8762.

bv

ec: Brian Gibson
Bridgeton Republic Services

FILE: IU, Bridgeton Landfill LLC, 1003-8030-00

Doug Mendoza

From: Doug Mendoza
Sent: Thursday, September 10, 2015 7:58 AM
To: Ed Galbraith (EGalbraith@barr.com) (EGalbraith@barr.com)
Subject: FW: Bridgeton Landfill Weekly Report

Ed,

Regarding the field pH, all I had to do was look one column to the right and I would have seen it. Regardless, please explain why the lab is measuring and reporting the pH.

Further clarification on the BOD: This sample is to fulfill the monthly monitoring requirement. So an estimate based on BOD/COD ratios is not appropriate here. For the hauled samples it is used more for calculating appropriate billing. I will still need an answer for when the UVT and BOD resamples were taken, though.

---Doug

From: Doug Mendoza
Sent: Wednesday, September 09, 2015 2:56 PM
To: 'Ed Galbraith'
Subject: RE: Bridgeton Landfill Weekly Report

When was MH013 resampled for the UVT? Was it during August to meet the August monthly sampling requirement? Same applies for BOD.

You neglected to explain the qualified pH. Please do so. It appears this pH was measured at the lab. Where is the required field pH measurement's result?

Doug

From: Ed Galbraith [mailto:EGalbraith@barr.com]
Sent: Wednesday, September 09, 2015 11:43 AM
To: Doug Mendoza; John Lodderhose; Brian G. Gibson; Michael Grace; Nora C. Estopare; Rob G Daly; 'Tippett Mosby, Leanne (Leanne.TippettMosby@dnr.mo.gov)'; 'Aaron Schmidt'; 'Nagel, Chris (Christopher.Nagel@dnr.mo.gov)'; 'bpower@republicservices.com'; 'Getting, James'; 'Bouchard, Derek (DBouchard@republicservices.com)'; 'Kamp, Kevin'; 'LaFata, Natalie'; 'Cooper, Ivan (icooper@cecinc.com)'; 'lwright@cecinc.com'; Kelly Caddy; Dana B. Pasi; Christopher J. Bulmahn; Ken Gambaro; Mike Townley; 'lwright@cecinc.com'; Andrea A. Nord; Becca Coyle; 'koleary@cecinc.com'; 'sgraves@cecinc.com'; 'awyatt@herstassociates.com'
Subject: Bridgeton Landfill Weekly Report

The reports are posted to the FTP site. Today is the monthly report for MH013.

> There has been no hauling since August 27, 2015 and no new data has been received for this week, so the 014 spreadsheets have not been updated since last week.
>
> The MH013 sample for August 18, 2015 (Pace Report 60200905) was qualified for sample temperature. MH013 was resampled and sent to Pace for UVT analysis.

Doug Mendoza

From: Doug Mendoza
Sent: Wednesday, September 09, 2015 2:56 PM
To: 'Ed Galbraith'
Subject: RE: Bridgeton Landfill Weekly Report

When was MH013 resampled for the UVT? Was it during August to meet the August monthly sampling requirement? Same applies for BOD.

You neglected to explain the qualified pH. Please do so. It appears this pH was measured at the lab. Where is the required field pH measurement's result?

Doug

From: Ed Galbraith [mailto:EGalbraith@barr.com]
Sent: Wednesday, September 09, 2015 11:43 AM
To: Doug Mendoza; John Lodderhose; Brian G. Gibson; Michael Grace; Nora C. Estopare; Rob G Daly; 'Tippett Mosby, Leanne (Leanne.TippettMosby@dnr.mo.gov)'; 'Aaron Schmidt'; 'Nagel, Chris (Christopher.Nagel@dnr.mo.gov)'; 'bpower@republicservices.com'; 'Getting, James'; 'Bouchard, Derek (DBouchard@republicservices.com)'; 'Kamp, Kevin'; 'LaFata, Natalie'; 'Cooper, Ivan (icooper@cecinc.com)'; 'lwright@cecinc.com'; Kelly Caddy; Dana B. Pasi; Christopher J. Bulmahn; Ken Gambaro; Mike Townley; 'lwright@cecinc.com'; Andrea A. Nord; Becca Coyle; 'koleary@cecinc.com'; 'sgraves@cecinc.com'; 'awyatt@herstassociates.com'
Subject: Bridgeton Landfill Weekly Report

The reports are posted to the FTP site. Today is the monthly report for MH013.

There has been no hauling since August 27, 2015 and no new data has been received for this week, so the 014 spreadsheets have not been updated since last week.

The MH013 sample for August 18, 2015 (Pace Report 60200905) was qualified for sample temperature. MH013 was resampled and sent to Pace for UVT analysis.

For MH013 sample for August 18, 2015 (Pace Report 60200931), the BOD was qualified "Oxygen usage is less than 2.0 for all dilutions set. The reported value is an estimated value." Once additional BOD data is received we will calculate an estimated value based on BOD/COD ratios.

The FTP site can be accessed as follows:

Copy this link and paste it into Windows Explorer (NOT Internet Explorer) ftp://ftp.barr.com/bridgetonlandfill/2015%20Reports/
User: blfdata;
Password: tran$fer!

Ed Galbraith

Senior Environmental Consultant
Jefferson City office: 573.638.5024
cell: 573.418.5562
egalbraith@barr.com
www.barr.com

Doug Mendoza

Bridgeton Landfill

From: Ed Galbraith <EGalbraith@barr.com>
Sent: Wednesday, September 09, 2015 1:47 PM
To: Doug Mendoza
Cc: Kelly Caddy; 'Bouchard, Derek (DBouchard@republicservices.com)'
Subject: Early notification of BLF lab reports

Doug,
Per special condition B.2 of the Bridgeton Landfill's permit, analytical reports must be submitted within 21 days of sampling. This is to notify you that the permit sample for 014, taken 8/20/2015 (Pace report 60201173) is posted to the ftp site at 2015_0916

Ed Galbraith

Senior Environmental Consultant
Jefferson City office: 573.638.5024
cell: 573.418.5562
egalbraith@barr.com
www.barr.com

resourceful. naturally. BARR

From: Ed Galbraith
Sent: Tuesday, September 08, 2015 8:05 AM
To: Doug Mendoza (DMENDOZA@stlmsd.com)
Cc: Kelly Caddy; Bouchard, Derek (DBouchard@republicservices.com)
Subject: Early notification of BLF lab reports

The FTP site can be accessed as follows:

Copy this link and paste it into Windows Explorer (NOT Internet Explorer) ftp://ftp.barr.com/bridgetonlandfill/2015%20Reports/
User: blfdata;
Password: tran$fer!

Doug Mendoza

From: Ed Galbraith <EGalbraith@barr.com>
Sent: Wednesday, September 09, 2015 11:43 AM
To: Doug Mendoza; John Lodderhose; Brian G. Gibson; Michael Grace; Nora C. Estopare; Rob G Daly; 'Tippett Mosby, Leanne (Leanne.TippettMosby@dnr.mo.gov)'; 'Aaron Schmidt'; 'Nagel, Chris (Christopher.Nagel@dnr.mo.gov)'; 'bpower@republicservices.com'; 'Getting, James'; 'Bouchard, Derek (DBouchard@republicservices.com)'; 'Kamp, Kevin'; 'LaFata, Natalie'; 'Cooper, Ivan (icooper@cecinc.com)'; 'lwright@cecinc.com'; Kelly Caddy; Dana B. Pasi; Christopher J. Bulmahn; Ken Gambaro; Mike Townley; 'lwright@cecinc.com'; Andrea A. Nord; Becca Coyle; 'koleary@cecinc.com'; 'sgraves@cecinc.com'; 'awyatt@herstassociates.com'
Subject: Bridgeton Landfill Weekly Report

CB 9-14

The reports are posted to the FTP site. Today is the monthly report for MH013.

There has been no hauling since August 27, 2015 and no new data has been received for this week, so the 014 spreadsheets have not been updated since last week.

The MH013 sample for August 18, 2015 (Pace Report 60200905) was qualified for sample temperature. MH013 was resampled and sent to Pace for UVT analysis.

For MH013 sample for August 18, 2015 (Pace Report 60200931), the BOD was qualified "Oxygen usage is less than 2.0 for all dilutions set. The reported value is an estimated value." Once additional BOD data is received we will calculate an estimated value based on BOD/COD ratios.

The FTP site can be accessed as follows:

Copy this link and paste it into Windows Explorer (NOT Internet Explorer) ftp://ftp.barr.com/bridgetonlandfill/2015%20Reports/
User: blfdata;
Password: tran$fer!

Ed Galbraith

Senior Environmental Consultant
Jefferson City office: 573.638.5024
cell: 573.418.5562
egalbraith@barr.com
www.barr.com

resource'ul. naturally. BARR

Table 1
LPTP Discharge Samples
Bridgeton Landfill

						Parameter	Biochemical Oxygen Demand (5-day)	Chemical Oxygen Demand	Cyanide	Nitrate	Nitrite	Nitrogen, ammonia as N
						Total or Dissolved	NA	NA	NA	NA	NA	NA
						Permit Limitation/Surcharge Threshold	300 mg/l	450 mg/l				
Location	Date	Start Composite	End Composite	Lab Name	Data Status	Lab Report	mg/l	mg/l	mg/l	mg/l	mg/l	mg/l
LPTP Permeate	9/06/2015			LPTP	No QC	LPTP	--	4460	--	--	--	--
MH013	9/06/2015			LPTP	No QC	LPTP	--	4400	--	--	--	--
LPTP Permeate	9/05/2015			LPTP	No QC	LPTP	--	4800	--	--	--	--
MH013	9/05/2015			LPTP	No QC	LPTP	--	4990	--	--	--	--
LPTP Permeate	9/04/2015			LPTP	No QC	LPTP	--	5070	--	--	--	--
MH013	9/04/2015			LPTP	No QC	LPTP	--	4780	--	--	--	--
LPTP Permeate	9/03/2015			LPTP	No QC	LPTP	--	5110	--	--	--	--
MH013	9/03/2015			LPTP	No QC	LPTP	--	4830	--	--	--	--
LPTP Permeate	9/02/2015			LPTP	No QC	LPTP	--	5190	--	--	--	--
MH013	9/02/2015			LPTP	No QC	LPTP	--	5010	--	--	--	--
LPTP Permeate	9/01/2015			LPTP	No QC	LPTP	--	4630	--	--	--	--
MH013	9/01/2015			LPTP	No QC	LPTP	--	4540	--	--	--	--
LPTP Permeate	8/31/2015			LPTP	No QC	LPTP	--	4450	--	--	--	--
MH013	8/31/2015			LPTP	No QC	LPTP	--	4580	--	--	--	--
LPTP Permeate	8/30/2015			LPTP	No QC	LPTP	--	5860	--	--	--	--
MH013	8/30/2015			LPTP	No QC	LPTP	--	4920	--	--	--	--
LPTP Permeate	8/29/2015			LPTP	No QC	LPTP	--	5910	--	--	--	--
MH013	8/29/2015			LPTP	No QC	LPTP	--	4830	--	--	--	--
LPTP Permeate	8/28/2015			LPTP	No QC	LPTP	--	5380	--	--	--	--
MH013	8/28/2015			LPTP	No QC	LPTP	--	4480	--	--	--	--
LPTP Permeate	8/27/2015			LPTP	No QC	LPTP	--	2160	--	--	--	--
MH013	8/27/2015			LPTP	No QC	LPTP	--	3100	--	--	--	--
LPTP Permeate	8/26/2015			LPTP	No QC	LPTP	--	2990	--	--	--	--
MH013	8/26/2015			LPTP	No QC	LPTP	--	1890	--	--	--	--
LPTP Permeate	8/24/2015			LPTP	No QC	LPTP	--	4270	--	--	--	--
MH013	8/24/2015			LPTP	No QC	LPTP	--	3470	--	--	--	--
LPTP Permeate	8/23/2015			LPTP	No QC	LPTP	--	4770	--	--	--	--
MH013	8/23/2015			LPTP	No QC	LPTP	--	4200	--	--	--	--
LPTP Permeate	8/22/2015			LPTP	No QC	LPTP	--	5100	--	--	--	--
MH013	8/22/2015			LPTP	No QC	LPTP	--	4380	--	--	--	--
LPTP Permeate	8/21/2015			LPTP	No QC	LPTP	--	5170	--	--	--	--
MH013	8/21/2015			LPTP	No QC	LPTP	--	4410	--	--	--	--
LPTP Permeate	8/20/2015			LPTP	No QC	LPTP	--	5660	--	--	--	--
MH013	8/20/2015			LPTP	No QC	LPTP	--	4550	--	--	--	--
LPTP Permeate	8/19/2015			LPTP	No QC	LPTP	--	4510	--	--	--	--
MH013	8/19/2015			LPTP	No QC	LPTP	--	4470	--	--	--	--
MH013	8/18/2015	9:30 AM	11:50 PM	Pace	Validated	60200905	--	--	--	--	--	--
MH013	8/18/2015	9:30 AM	11:50 PM	Pace	Validated	60200905	--	--	--	--	--	--
MH013	8/18/2015	9:30 AM	11:50 PM	Pace	Validated	60200931	771 *	4290	0.012	--	--	144
LPTP Permeate	8/18/2015			LPTP	No QC	LPTP	--	3660	--	--	--	--
MH013	8/18/2015			LPTP	No QC	LPTP	--	3800	--	--	--	--

Enter estimated value -PWM

MSD 033523

Table 1
LPTP Discharge Samples
Bridgeton Landfill

						Parameter	Oil and Grease	Orthophosphate as P	Permeate Produced	pH	pH	Phosphorus, Total as P
						Total or Dissolved	NA	NA	NA	NA	NA	NA
						Permit Limitation/Surcharge Threshold	200 mg/l			5.5 - 11.5 pH units	6.5 - 11.5 pH units	
Location	Date	Start Composite	End Composite	Lab Name	Data Status	Lab Report	mg/l	mg/l	gal	pH units	pH units	mg/l
LPTP Permeate	9/06/2015			LPTP	No QC	LPTP	--	4.38	334956	--	7.45	2.49
MH013	9/06/2015			LPTP	No QC	LPTP	--	2.51	--	--	7.49	1.86
LPTP Permeate	9/05/2015			LPTP	No QC	LPTP	--	4.54	290168	--	7.4	2.37
MH013	9/05/2015			LPTP	No QC	LPTP	--	2.64	--	--	7.42	2
LPTP Permeate	9/04/2015			LPTP	No QC	LPTP	--	3.52	268712	--	7.37	8.83
MH013	9/04/2015			LPTP	No QC	LPTP	--	0.43	--	--	7.41	2.9
LPTP Permeate	9/03/2015			LPTP	No QC	LPTP	--	4.12	344968	--	7.55	3.06
MH013	9/03/2015			LPTP	No QC	LPTP	--	0.28	--	--	7.24	1.93
LPTP Permeate	9/02/2015			LPTP	No QC	LPTP	--	4.06	315970	--	7.43	2.91
MH013	9/02/2015			LPTP	No QC	LPTP	--	0.31	--	--	7.4	1.87
LPTP Permeate	9/01/2015			LPTP	No QC	LPTP	--	4.25	250790	--	7.63	3.17
MH013	9/01/2015			LPTP	No QC	LPTP	--	0.24	--	--	7.54	2.32
LPTP Permeate	8/31/2015			LPTP	No QC	LPTP	--	3.72	340650	--	7.41	3.09
MH013	8/31/2015			LPTP	No QC	LPTP	--	0.67	--	--	7.61	2.18
LPTP Permeate	8/30/2015			LPTP	No QC	LPTP	--	2.34	338916	--	7.46	2.94
MH013	8/30/2015			LPTP	No QC	LPTP	--	0.569	--	--	7.58	1.82
LPTP Permeate	8/29/2015			LPTP	No QC	LPTP	--	3.2	228902	--	7.54	3.43
MH013	8/29/2015			LPTP	No QC	LPTP	--	0.244	--	--	7.72	0.968
LPTP Permeate	8/28/2015			LPTP	No QC	LPTP	--	2.77	331834	--	7.46	1.96
MH013	8/28/2015			LPTP	No QC	LPTP	--	0.701	--	--	7.57	1.58
LPTP Permeate	8/27/2015			LPTP	No QC	LPTP	--	3.25	322664	--	8.63	4.2
MH013	8/27/2015			LPTP	No QC	LPTP	--	3.21	--	--	8.12	3.36
LPTP Permeate	8/26/2015			LPTP	No QC	LPTP	--	2.91	232126	--	7.61	3.54
MH013	8/26/2015			LPTP	No QC	LPTP	--	2.29	--	--	7.59	3.17
LPTP Permeate	8/24/2015			LPTP	No QC	LPTP	--	6.95	256664	--	7.63	2.72
MH013	8/24/2015			LPTP	No QC	LPTP	--	3.16	--	--	7.87	2.23
LPTP Permeate	8/23/2015			LPTP	No QC	LPTP	--	7.53	309662	--	7.71	2.54
MH013	8/23/2015			LPTP	No QC	LPTP	--	1.63	--	--	7.91	2.1
LPTP Permeate	8/22/2015			LPTP	No QC	LPTP	--	7.71	343976	--	7.73	3.74
MH013	8/22/2015			LPTP	No QC	LPTP	--	1.52	--	--	8.07	2.73
LPTP Permeate	8/21/2015			LPTP	No QC	LPTP	--	8.8	344896	--	7.74	4.22
MH013	8/21/2015			LPTP	No QC	LPTP	--	1.44	--	--	8.24	3.03
LPTP Permeate	8/20/2015			LPTP	No QC	LPTP	--	9	343030	--	7.75	4.08
MH013	8/20/2015			LPTP	No QC	LPTP	--	2.27	--	--	8.5	3.12
LPTP Permeate	8/19/2015			LPTP	No QC	LPTP	--	5.91	344100	--	7.89	4.29
MH013	8/19/2015			LPTP	No QC	LPTP	--	2.49	--	--	7.98	3.17
MH013	8/18/2015	9:30 AM	11:50 PM	Pace	Validated	60200905	--	--	--	--	--	--
MH013	8/18/2015	9:30 AM	11:50 PM	Pace	Validated	60200905	--	--	--	--	--	--
MH013	8/18/2015	9:30 AM	11:50 PM	Pace	Validated	60200931	9.7	--	--	8.4 h	--	--
LPTP Permeate	8/18/2015			LPTP	No QC	LPTP	--	3.2	345240	--	7.73	4.15
MH013	8/18/2015			LPTP	No QC	LPTP	--	1.4	--	--	7.91	3.06

Enter

MSD 033524

Table 1
LPTP Discharge Samples
Bridgeton Landfill

Location	Date	Start Composite	End Composite	Lab Name	Data Status	Lab Report	Solids, total suspended	Metered Discharge	Calculated Discharge	Total Phenolics by Method 420.1	Total Phenolics by Method 625	Total Toxic Organics
						Parameter	Total or Dissolved	NA	NA	NA	NA	NA
						Permit Limitation/Discharge Threshold	300 mg/l			21 mg/l	21 mg/l	0.043 ug/l
							mg/l	gal	gal	mg/l	mg/l	ug/l
LPTP Permeate	9/06/2015			LPTP	No QC	LPTP	11.5	--	--	--	--	--
MH013	9/06/2015			LPTP	No QC	LPTP	42.5	259970	203712	--	--	--
LPTP Permeate	9/05/2015			LPTP	No QC	LPTP	6.5	--	--	--	--	--
MH013	9/05/2015			LPTP	No QC	LPTP	65.5	221480	199672	--	--	--
LPTP Permeate	9/04/2015			LPTP	No QC	LPTP	9	--	--	--	--	--
MH013	9/04/2015			LPTP	No QC	LPTP	73	214180	246232	--	--	--
LPTP Permeate	9/03/2015			LPTP	No QC	LPTP	14	--	--	--	--	--
MH013	9/03/2015			LPTP	No QC	LPTP	66	268964	247288	--	--	--
LPTP Permeate	9/02/2015			LPTP	No QC	LPTP	10	--	--	--	--	--
MH013	9/02/2015			LPTP	No QC	LPTP	61	261616	120476	--	--	--
LPTP Permeate	9/01/2015			LPTP	No QC	LPTP	14	--	--	--	--	--
MH013	9/01/2015			LPTP	No QC	LPTP	119	203590	255324	--	--	--
LPTP Permeate	8/31/2015			LPTP	No QC	LPTP	13	--	--	--	--	--
MH013	8/31/2015			LPTP	No QC	LPTP	81.5	277090	269377	--	--	--
LPTP Permeate	8/30/2015			LPTP	No QC	LPTP	9	--	--	--	--	--
MH013	8/30/2015			LPTP	No QC	LPTP	90	289830	162446	--	--	--
LPTP Permeate	8/29/2015			LPTP	No QC	LPTP	14	--	--	--	--	--
MH013	8/29/2015			LPTP	No QC	LPTP	176.5	75560	232399	--	--	--
LPTP Permeate	8/28/2015			LPTP	No QC	LPTP	12.5	--	--	--	--	--
MH013	8/28/2015			LPTP	No QC	LPTP	107	253370	234928	--	--	--
LPTP Permeate	8/27/2015			LPTP	No QC	LPTP	7	--	--	--	--	--
MH013	8/27/2015			LPTP	No QC	LPTP	72	255140	192950	--	--	--
LPTP Permeate	8/26/2015			LPTP	No QC	LPTP	8	--	--	--	--	--
MH013	8/26/2015			LPTP	No QC	LPTP	30.5	196710	124531	--	--	--
LPTP Permeate	8/24/2015			LPTP	No QC	LPTP	13.5	--	--	--	--	--
MH013	8/24/2015			LPTP	No QC	LPTP	61	253144	225542	--	--	--
LPTP Permeate	8/23/2015			LPTP	No QC	LPTP	28	--	--	--	--	--
MH013	8/23/2015			LPTP	No QC	LPTP	175	245336	249131	--	--	--
LPTP Permeate	8/22/2015			LPTP	No QC	LPTP	9	--	--	--	--	--
MH013	8/22/2015			LPTP	No QC	LPTP	39.5	271208	254893	--	--	--
LPTP Permeate	8/21/2015			LPTP	No QC	LPTP	21.5	--	--	--	--	--
MH013	8/21/2015			LPTP	No QC	LPTP	38.5	277540	260798	--	--	--
LPTP Permeate	8/20/2015			LPTP	No QC	LPTP	12.5	--	--	--	--	--
MH013	8/20/2015			LPTP	No QC	LPTP	56.5	281248	272434	--	--	--
LPTP Permeate	8/19/2015			LPTP	No QC	LPTP	15	--	--	--	--	--
MH013	8/19/2015			LPTP	No QC	LPTP	59.5	295892	278469	--	--	--
MH013	8/18/2015	9:30 AM	11:50 PM	Pace	Validated	60200905	--	--	--	--	--	--
MH013	8/18/2015	9:30 AM	11:50 PM	Pace	Validated	60200905	--	--	--	--	--	--
MH013	8/18/2015	9:30 AM	11:50 PM	Pace	Validated	60200931	278	--	--	2.0	3.028	1138
LPTP Permeate	8/18/2015			LPTP	No QC	LPTP	13.5	--	--	--	--	--
MH013	8/18/2015			LPTP	No QC	LPTP	42.5	303312	279920	--	--	--

enter 420.1 results
plus 11 phenolic cpds.
CB

MSD 033525

Table 1
LPTP Discharge Samples
Bridgeton Landfill

						Parameter	Ultraviolet absorbance at 254 nm	Antimony	Arsenic	Beryllium	Cadmium	Chromium
						Total or Dissolved	NA	Total	Total	Total	Total	Total
						Permit Limitation/Surcharge Threshold			770 ug/l		700 ug/l	6000 ug/l
Location	Date	Start Composite	End Composite	Lab Name	Data Status	Lab Report	cm-1	ug/l	ug/l	ug/l	ug/l	ug/l
LPTP Permeate	9/06/2015			LPTP	No QC	LPTP	--	--	--	--	--	--
MH013	9/06/2015			LPTP	No QC	LPTP	--	--	--	--	--	--
LPTP Permeate	9/05/2015			LPTP	No QC	LPTP	--	--	--	--	--	--
MH013	9/05/2015			LPTP	No QC	LPTP	--	--	--	--	--	--
LPTP Permeate	9/04/2015			LPTP	No QC	LPTP	--	--	--	--	--	--
MH013	9/04/2015			LPTP	No QC	LPTP	--	--	--	--	--	--
LPTP Permeate	9/03/2015			LPTP	No QC	LPTP	--	--	--	--	--	--
MH013	9/03/2015			LPTP	No QC	LPTP	--	--	--	--	--	--
LPTP Permeate	9/02/2015			LPTP	No QC	LPTP	--	--	--	--	--	--
MH013	9/02/2015			LPTP	No QC	LPTP	--	--	--	--	--	--
LPTP Permeate	9/01/2015			LPTP	No QC	LPTP	--	--	--	--	--	--
MH013	9/01/2015			LPTP	No QC	LPTP	--	--	--	--	--	--
LPTP Permeate	8/31/2015			LPTP	No QC	LPTP	--	--	--	--	--	--
MH013	8/31/2015			LPTP	No QC	LPTP	--	--	--	--	--	--
LPTP Permeate	8/30/2015			LPTP	No QC	LPTP	--	--	--	--	--	--
MH013	8/30/2015			LPTP	No QC	LPTP	--	--	--	--	--	--
LPTP Permeate	8/29/2015			LPTP	No QC	LPTP	--	--	--	--	--	--
MH013	8/29/2015			LPTP	No QC	LPTP	--	--	--	--	--	--
LPTP Permeate	8/28/2015			LPTP	No QC	LPTP	--	--	--	--	--	--
MH013	8/28/2015			LPTP	No QC	LPTP	--	--	--	--	--	--
LPTP Permeate	8/27/2015			LPTP	No QC	LPTP	--	--	--	--	--	--
MH013	8/27/2015			LPTP	No QC	LPTP	--	--	--	--	--	--
LPTP Permeate	8/26/2015			LPTP	No QC	LPTP	--	--	--	--	--	--
MH013	8/26/2015			LPTP	No QC	LPTP	--	--	--	--	--	--
LPTP Permeate	8/24/2015			LPTP	No QC	LPTP	--	--	--	--	--	--
MH013	8/24/2015			LPTP	No QC	LPTP	--	--	--	--	--	--
LPTP Permeate	8/23/2015			LPTP	No QC	LPTP	--	--	--	--	--	--
MH013	8/23/2015			LPTP	No QC	LPTP	--	--	--	--	--	--
LPTP Permeate	8/22/2015			LPTP	No QC	LPTP	--	--	--	--	--	--
MH013	8/22/2015			LPTP	No QC	LPTP	--	--	--	--	--	--
LPTP Permeate	8/21/2015			LPTP	No QC	LPTP	--	--	--	--	--	--
MH013	8/21/2015			LPTP	No QC	LPTP	--	--	--	--	--	--
LPTP Permeate	8/20/2015			LPTP	No QC	LPTP	--	--	--	--	--	--
MH013	8/20/2015			LPTP	No QC	LPTP	--	--	--	--	--	--
LPTP Permeate	8/19/2015			LPTP	No QC	LPTP	--	--	--	--	--	--
MH013	8/19/2015			LPTP	No QC	LPTP	--	--	--	--	--	--
MH013	8/18/2015	9:30 AM	11:50 PM	Pace	Validated	60200905	27.5 h	--	--	--	--	--
MH013	8/18/2015	9:30 AM	11:50 PM	Pace	Validated	60200905	27.4 h	--	--	--	--	--
MH013	8/18/2015	9:30 AM	11:50 PM	Pace	Validated	60200931	--	<10 ND	309	<1 ND	<5 ND	31.4
LPTP Permeate	8/18/2015			LPTP	No QC	LPTP	--	--	--	--	--	--
MH013	8/18/2015			LPTP	No QC	LPTP	--	--	--	--	--	--

Entered qualified value - 1 hour

27.5 absorbance → 3.16×10^{-26} transmittance

27.4 absorbance → 3.98×10^{-26} transmittance CB

MSD 033526

Table 1
LPTP Discharge Samples
Bridgeton Landfill

						Parameter	Copper	Iron	Lead	Magnesium	Mercury	Nickel
						Total or Dissolved	Total	Total	Total	Total	Total	Total
						Permit Limitation/Surcharge Threshold	2700 ug/l	150000 ug/l	400 ug/l		0 ug/l	2300 ug/l
Location	Date	Start Composite	End Composite	Lab Name	Data Status	Lab Report	ug/l	ug/l	ug/l	ug/l	ug/l	ug/l
LPTP Permeate	9/06/2015			LPTP	No QC	LPTP	--	--	--	--	--	--
MH013	9/06/2015			LPTP	No QC	LPTP	--	--	--	--	--	--
LPTP Permeate	9/05/2015			LPTP	No QC	LPTP	--	--	--	--	--	--
MH013	9/05/2015			LPTP	No QC	LPTP	--	--	--	--	--	--
LPTP Permeate	9/04/2015			LPTP	No QC	LPTP	--	--	--	--	--	--
MH013	9/04/2015			LPTP	No QC	LPTP	--	--	--	--	--	--
LPTP Permeate	9/03/2015			LPTP	No QC	LPTP	--	--	--	--	--	--
MH013	9/03/2015			LPTP	No QC	LPTP	--	--	--	--	--	--
LPTP Permeate	9/02/2015			LPTP	No QC	LPTP	--	--	--	--	--	--
MH013	9/02/2015			LPTP	No QC	LPTP	--	--	--	--	--	--
LPTP Permeate	9/01/2015			LPTP	No QC	LPTP	--	--	--	--	--	--
MH013	9/01/2015			LPTP	No QC	LPTP	--	--	--	--	--	--
LPTP Permeate	8/31/2015			LPTP	No QC	LPTP	--	--	--	--	--	--
MH013	8/31/2015			LPTP	No QC	LPTP	--	--	--	--	--	--
LPTP Permeate	8/30/2015			LPTP	No QC	LPTP	--	--	--	--	--	--
MH013	8/30/2015			LPTP	No QC	LPTP	--	--	--	--	--	--
LPTP Permeate	8/29/2015			LPTP	No QC	LPTP	--	--	--	--	--	--
MH013	8/29/2015			LPTP	No QC	LPTP	--	--	--	--	--	--
LPTP Permeate	8/28/2015			LPTP	No QC	LPTP	--	--	--	--	--	--
MH013	8/28/2015			LPTP	No QC	LPTP	--	--	--	--	--	--
LPTP Permeate	8/27/2015			LPTP	No QC	LPTP	--	--	--	--	--	--
MH013	8/27/2015			LPTP	No QC	LPTP	--	--	--	--	--	--
LPTP Permeate	8/26/2015			LPTP	No QC	LPTP	--	--	--	--	--	--
MH013	8/26/2015			LPTP	No QC	LPTP	--	--	--	--	--	--
LPTP Permeate	8/24/2015			LPTP	No QC	LPTP	--	--	--	--	--	--
MH013	8/24/2015			LPTP	No QC	LPTP	--	--	--	--	--	--
LPTP Permeate	8/23/2015			LPTP	No QC	LPTP	--	--	--	--	--	--
MH013	8/23/2015			LPTP	No QC	LPTP	--	--	--	--	--	--
LPTP Permeate	8/22/2015			LPTP	No QC	LPTP	--	--	--	--	--	--
MH013	8/22/2015			LPTP	No QC	LPTP	--	--	--	--	--	--
LPTP Permeate	8/21/2015			LPTP	No QC	LPTP	--	--	--	--	--	--
MH013	8/21/2015			LPTP	No QC	LPTP	--	--	--	--	--	--
LPTP Permeate	8/20/2015			LPTP	No QC	LPTP	--	--	--	--	--	--
MH013	8/20/2015			LPTP	No QC	LPTP	--	--	--	--	--	--
LPTP Permeate	8/19/2015			LPTP	No QC	LPTP	--	--	--	--	--	--
MH013	8/19/2015			LPTP	No QC	LPTP	--	--	--	--	--	--
MH013	8/18/2015	9:30 AM	11:50 PM	Pace	Validated	60200905	--	--	--	--	--	--
MH013	8/18/2015	9:30 AM	11:50 PM	Pace	Validated	60200905	--	--	--	--	--	--
MH013	8/18/2015	9:30 AM	11:50 PM	Pace	Validated	60200931	<10 ~~ND~~	1660	<5 ~~ND~~	85300	<0.2 ~~ND~~	25.8
LPTP Permeate	8/18/2015			LPTP	No QC	LPTP	--	--	--	--	--	--
MH013	8/18/2015			LPTP	No QC	LPTP	--	--	--	--	--	--

MSD 033527

Table 1
LPTP Discharge Samples
Bridgeton Landfill

						Parameter	Selenium	Silver	Thallium	Zinc	1,2,4-Trichlorobenzene	2,4,6-Trichlorophenol
						Total or Dissolved	Total	Total	Total	Total	NA	NA
						Permit Limitation/Surcharge Threshold		500 ug/l		4000 ug/l		
Location	Date	Start Composite	End Composite	Lab Name	Data Status	Lab Report	ug/l	ug/l	ug/l	ug/l	ug/l	ug/l
LPTP Permeate	9/06/2015			LPTP	No QC	LPTP	--	--	--	--	--	--
MH013	9/06/2015			LPTP	No QC	LPTP	--	--	--	--	--	--
LPTP Permeate	9/05/2015			LPTP	No QC	LPTP	--	--	--	--	--	--
MH013	9/05/2015			LPTP	No QC	LPTP	--	--	--	--	--	--
LPTP Permeate	9/04/2015			LPTP	No QC	LPTP	--	--	--	--	--	--
MH013	9/04/2015			LPTP	No QC	LPTP	--	--	--	--	--	--
LPTP Permeate	9/03/2015			LPTP	No QC	LPTP	--	--	--	--	--	--
MH013	9/03/2015			LPTP	No QC	LPTP	--	--	--	--	--	--
LPTP Permeate	9/02/2015			LPTP	No QC	LPTP	--	--	--	--	--	--
MH013	9/02/2015			LPTP	No QC	LPTP	--	--	--	--	--	--
LPTP Permeate	9/01/2015			LPTP	No QC	LPTP	--	--	--	--	--	--
MH013	9/01/2015			LPTP	No QC	LPTP	--	--	--	--	--	--
LPTP Permeate	8/31/2015			LPTP	No QC	LPTP	--	--	--	--	--	--
MH013	8/31/2015			LPTP	No QC	LPTP	--	--	--	--	--	--
LPTP Permeate	8/30/2015			LPTP	No QC	LPTP	--	--	--	--	--	--
MH013	8/30/2015			LPTP	No QC	LPTP	--	--	--	--	--	--
LPTP Permeate	8/29/2015			LPTP	No QC	LPTP	--	--	--	--	--	--
MH013	8/29/2015			LPTP	No QC	LPTP	--	--	--	--	--	--
LPTP Permeate	8/28/2015			LPTP	No QC	LPTP	--	--	--	--	--	--
MH013	8/28/2015			LPTP	No QC	LPTP	--	--	--	--	--	--
LPTP Permeate	8/27/2015			LPTP	No QC	LPTP	--	--	--	--	--	--
MH013	8/27/2015			LPTP	No QC	LPTP	--	--	--	--	--	--
LPTP Permeate	8/26/2015			LPTP	No QC	LPTP	--	--	--	--	--	--
MH013	8/26/2015			LPTP	No QC	LPTP	--	--	--	--	--	--
LPTP Permeate	8/24/2015			LPTP	No QC	LPTP	--	--	--	--	--	--
MH013	8/24/2015			LPTP	No QC	LPTP	--	--	--	--	--	--
LPTP Permeate	8/23/2015			LPTP	No QC	LPTP	--	--	--	--	--	--
MH013	8/23/2015			LPTP	No QC	LPTP	--	--	--	--	--	--
LPTP Permeate	8/22/2015			LPTP	No QC	LPTP	--	--	--	--	--	--
MH013	8/22/2015			LPTP	No QC	LPTP	--	--	--	--	--	--
LPTP Permeate	8/21/2015			LPTP	No QC	LPTP	--	--	--	--	--	--
MH013	8/21/2015			LPTP	No QC	LPTP	--	--	--	--	--	--
LPTP Permeate	8/20/2015			LPTP	No QC	LPTP	--	--	--	--	--	--
MH013	8/20/2015			LPTP	No QC	LPTP	--	--	--	--	--	--
LPTP Permeate	8/19/2015			LPTP	No QC	LPTP	--	--	--	--	--	--
MH013	8/19/2015			LPTP	No QC	LPTP	--	--	--	--	--	--
MH013	8/18/2015	9:30 AM	11:50 PM	Pace	Validated	60200905	--	--	--	--	--	--
MH013	8/18/2015	9:30 AM	11:50 PM	Pace	Validated	60200905	--	--	--	--	--	--
MH013	8/18/2015	9:30 AM	11:50 PM	Pace	Validated	60200931	<15 ND	<7 ND	<20 ND	<50 ND	<10 ND	<10 ND
LPTP Permeate	8/18/2015			LPTP	No QC	LPTP	--	--	--	--	--	--
MH013	8/18/2015			LPTP	No QC	LPTP	--	--	--	--	--	--

MSD 033528

Table 1
LPTP Discharge Samples
Bridgeton Landfill

						Parameter	2,4-Dichlorophenol	2,4-Dimethylphenol	2,4-Dinitrophenol	2,4-Dinitrotoluene	2,6-Dinitrotoluene	2-Chloronaphthalene
						Total or Dissolved	NA	NA	NA	NA	NA	NA
						Permit Limit or Surcharge Threshold						
Location	Date	Start Composite	End Composite	Lab Name	Data Status	Lab Report #	ug/l	ug/l	ug/l	ug/l	ug/l	ug/l
LPTP Permeate	9/06/2015			LPTP	No QC	LPTP	--	--	--	--	--	--
MH013	9/06/2015			LPTP	No QC	LPTP	--	--	--	--	--	--
LPTP Permeate	9/05/2015			LPTP	No QC	LPTP	--	--	--	--	--	--
MH013	9/05/2015			LPTP	No QC	LPTP	--	--	--	--	--	--
LPTP Permeate	9/04/2015			LPTP	No QC	LPTP	--	--	--	--	--	--
MH013	9/04/2015			LPTP	No QC	LPTP	--	--	--	--	--	--
LPTP Permeate	9/03/2015			LPTP	No QC	LPTP	--	--	--	--	--	--
MH013	9/03/2015			LPTP	No QC	LPTP	--	--	--	--	--	--
LPTP Permeate	9/02/2015			LPTP	No QC	LPTP	--	--	--	--	--	--
MH013	9/02/2015			LPTP	No QC	LPTP	--	--	--	--	--	--
LPTP Permeate	9/01/2015			LPTP	No QC	LPTP	--	--	--	--	--	--
MH013	9/01/2015			LPTP	No QC	LPTP	--	--	--	--	--	--
LPTP Permeate	8/31/2015			LPTP	No QC	LPTP	--	--	--	--	--	--
MH013	8/31/2015			LPTP	No QC	LPTP	--	--	--	--	--	--
LPTP Permeate	8/30/2015			LPTP	No QC	LPTP	--	--	--	--	--	--
MH013	8/30/2015			LPTP	No QC	LPTP	--	--	--	--	--	--
LPTP Permeate	8/29/2015			LPTP	No QC	LPTP	--	--	--	--	--	--
MH013	8/29/2015			LPTP	No QC	LPTP	--	--	--	--	--	--
LPTP Permeate	8/28/2015			LPTP	No QC	LPTP	--	--	--	--	--	--
MH013	8/28/2015			LPTP	No QC	LPTP	--	--	--	--	--	--
LPTP Permeate	8/27/2015			LPTP	No QC	LPTP	--	--	--	--	--	--
MH013	8/27/2015			LPTP	No QC	LPTP	--	--	--	--	--	--
LPTP Permeate	8/26/2015			LPTP	No QC	LPTP	--	--	--	--	--	--
MH013	8/26/2015			LPTP	No QC	LPTP	--	--	--	--	--	--
LPTP Permeate	8/24/2015			LPTP	No QC	LPTP	--	--	--	--	--	--
MH013	8/24/2015			LPTP	No QC	LPTP	--	--	--	--	--	--
LPTP Permeate	8/23/2015			LPTP	No QC	LPTP	--	--	--	--	--	--
MH013	8/23/2015			LPTP	No QC	LPTP	--	--	--	--	--	--
LPTP Permeate	8/22/2015			LPTP	No QC	LPTP	--	--	--	--	--	--
MH013	8/22/2015			LPTP	No QC	LPTP	--	--	--	--	--	--
LPTP Permeate	8/21/2015			LPTP	No QC	LPTP	--	--	--	--	--	--
MH013	8/21/2015			LPTP	No QC	LPTP	--	--	--	--	--	--
LPTP Permeate	8/20/2015			LPTP	No QC	LPTP	--	--	--	--	--	--
MH013	8/20/2015			LPTP	No QC	LPTP	--	--	--	--	--	--
LPTP Permeate	8/19/2015			LPTP	No QC	LPTP	--	--	--	--	--	--
MH013	8/19/2015			LPTP	No QC	LPTP	--	--	--	--	--	--
MH013	8/18/2015	9:30 AM	11:50 PM	Pace	Validated	60200905	--	--	--	--	--	--
MH013	8/18/2015	9:30 AM	11:50 PM	Pace	Validated	60200905	--	--	--	--	--	--
MH013	8/18/2015	9:30 AM	11:50 PM	Pace	Validated	60200931	<10.0 ND	<10.1 ND	<10.0 ND	ND	ND	ND
LPTP Permeate	8/18/2015			LPTP	No QC	LPTP	--	--	--	--	--	--
MH013	8/18/2015			LPTP	No QC	LPTP	--	--	--	--	--	--

MSD 033529

Table 1
LPTP Discharge Samples
Bridgeton Landfill

						Parameter	2-4-6-Trichlorophenol	2-Methyl-4,6-dinitrophenol	2-Nitrophenol	3,3'-dichlorobenzidine	4-Bromophenyl phenyl ether	4-Chloro-3-methylphenol
						Total or Dissolved	NA	NA	NA	NA	NA	NA
						Permit Limitation/Surcharge Threshold						
Location	Date	Start Composite	End Composite	Lab Name	Data Status	Lab Report	ug/l	ug/l	ug/l	ug/l	ug/l	ug/l
LPTP Permeate	9/06/2015			LPTP	No QC	LPTP	--	--	--	--	--	--
MH013	9/06/2015			LPTP	No QC	LPTP	--	--	--	--	--	--
LPTP Permeate	9/05/2015			LPTP	No QC	LPTP	--	--	--	--	--	--
MH013	9/05/2015			LPTP	No QC	LPTP	--	--	--	--	--	--
LPTP Permeate	9/04/2015			LPTP	No QC	LPTP	--	--	--	--	--	--
MH013	9/04/2015			LPTP	No QC	LPTP	--	--	--	--	--	--
LPTP Permeate	9/03/2015			LPTP	No QC	LPTP	--	--	--	--	--	--
MH013	9/03/2015			LPTP	No QC	LPTP	--	--	--	--	--	--
LPTP Permeate	9/02/2015			LPTP	No QC	LPTP	--	--	--	--	--	--
MH013	9/02/2015			LPTP	No QC	LPTP	--	--	--	--	--	--
LPTP Permeate	9/01/2015			LPTP	No QC	LPTP	--	--	--	--	--	--
MH013	9/01/2015			LPTP	No QC	LPTP	--	--	--	--	--	--
LPTP Permeate	8/31/2015			LPTP	No QC	LPTP	--	--	--	--	--	--
MH013	8/31/2015			LPTP	No QC	LPTP	--	--	--	--	--	--
LPTP Permeate	8/30/2015			LPTP	No QC	LPTP	--	--	--	--	--	--
MH013	8/30/2015			LPTP	No QC	LPTP	--	--	--	--	--	--
LPTP Permeate	8/29/2015			LPTP	No QC	LPTP	--	--	--	--	--	--
MH013	8/29/2015			LPTP	No QC	LPTP	--	--	--	--	--	--
LPTP Permeate	8/28/2015			LPTP	No QC	LPTP	--	--	--	--	--	--
MH013	8/28/2015			LPTP	No QC	LPTP	--	--	--	--	--	--
LPTP Permeate	8/27/2015			LPTP	No QC	LPTP	--	--	--	--	--	--
MH013	8/27/2015			LPTP	No QC	LPTP	--	--	--	--	--	--
LPTP Permeate	8/26/2015			LPTP	No QC	LPTP	--	--	--	--	--	--
MH013	8/26/2015			LPTP	No QC	LPTP	--	--	--	--	--	--
LPTP Permeate	8/24/2015			LPTP	No QC	LPTP	--	--	--	--	--	--
MH013	8/24/2015			LPTP	No QC	LPTP	--	--	--	--	--	--
LPTP Permeate	8/23/2015			LPTP	No QC	LPTP	--	--	--	--	--	--
MH013	8/23/2015			LPTP	No QC	LPTP	--	--	--	--	--	--
LPTP Permeate	8/22/2015			LPTP	No QC	LPTP	--	--	--	--	--	--
MH013	8/22/2015			LPTP	No QC	LPTP	--	--	--	--	--	--
LPTP Permeate	8/21/2015			LPTP	No QC	LPTP	--	--	--	--	--	--
MH013	8/21/2015			LPTP	No QC	LPTP	--	--	--	--	--	--
LPTP Permeate	8/20/2015			LPTP	No QC	LPTP	--	--	--	--	--	--
MH013	8/20/2015			LPTP	No QC	LPTP	--	--	--	--	--	--
LPTP Permeate	8/19/2015			LPTP	No QC	LPTP	--	--	--	--	--	--
MH013	8/19/2015			LPTP	No QC	LPTP	--	--	--	--	--	--
MH013	8/18/2015	9:30 AM	11:50 PM	Pace	Validated	60200905	--	--	--	--	--	--
MH013	8/18/2015	9:30 AM	11:50 PM	Pace	Validated	60200905	--	--	--	--	--	--
MH013	8/18/2015	9:30 AM	11:50 PM	Pace	Validated	60200931	<101 ~~ND~~	<505 ~~ND~~	<101 ~~ND~~	ND	ND	<101 ~~ND~~
LPTP Permeate	8/18/2015			LPTP	No QC	LPTP	--	--	--	--	--	--
MH013	8/18/2015			LPTP	No QC	LPTP	--	--	--	--	--	--

MSD 033530

Table 1
LPTP Discharge Samples
Bridgeton Landfill

						Parameter	4-Chlorophenyl phenyl ether	4-Nitrophenol	Acenaphthene	Acenaphthylene	Anthracene	Benz(a)anthracene
						Total or Dissolved	NA	NA	NA	NA	NA	NA
						Permit Limitation/Surcharge Threshold						
Location	Date	Start Composite	End Composite	Lab Name	Data Status	Lab Report	ug/l	ug/l	ug/l	ug/l	ug/l	ug/l
LPTP Permeate	9/06/2015			LPTP	No QC	LPTP	--	--	--	--	--	--
MH013	9/06/2015			LPTP	No QC	LPTP	--	--	--	--	--	--
LPTP Permeate	9/05/2015			LPTP	No QC	LPTP	--	--	--	--	--	--
MH013	9/05/2015			LPTP	No QC	LPTP	--	--	--	--	--	--
LPTP Permeate	9/04/2015			LPTP	No QC	LPTP	--	--	--	--	--	--
MH013	9/04/2015			LPTP	No QC	LPTP	--	--	--	--	--	--
LPTP Permeate	9/03/2015			LPTP	No QC	LPTP	--	--	--	--	--	--
MH013	9/03/2015			LPTP	No QC	LPTP	--	--	--	--	--	--
LPTP Permeate	9/02/2015			LPTP	No QC	LPTP	--	--	--	--	--	--
MH013	9/02/2015			LPTP	No QC	LPTP	--	--	--	--	--	--
LPTP Permeate	9/01/2015			LPTP	No QC	LPTP	--	--	--	--	--	--
MH013	9/01/2015			LPTP	No QC	LPTP	--	--	--	--	--	--
LPTP Permeate	8/31/2015			LPTP	No QC	LPTP	--	--	--	--	--	--
MH013	8/31/2015			LPTP	No QC	LPTP	--	--	--	--	--	--
LPTP Permeate	8/30/2015			LPTP	No QC	LPTP	--	--	--	--	--	--
MH013	8/30/2015			LPTP	No QC	LPTP	--	--	--	--	--	--
LPTP Permeate	8/29/2015			LPTP	No QC	LPTP	--	--	--	--	--	--
MH013	8/29/2015			LPTP	No QC	LPTP	--	--	--	--	--	--
LPTP Permeate	8/28/2015			LPTP	No QC	LPTP	--	--	--	--	--	--
MH013	8/28/2015			LPTP	No QC	LPTP	--	--	--	--	--	--
LPTP Permeate	8/27/2015			LPTP	No QC	LPTP	--	--	--	--	--	--
MH013	8/27/2015			LPTP	No QC	LPTP	--	--	--	--	--	--
LPTP Permeate	8/26/2015			LPTP	No QC	LPTP	--	--	--	--	--	--
MH013	8/26/2015			LPTP	No QC	LPTP	--	--	--	--	--	--
LPTP Permeate	8/24/2015			LPTP	No QC	LPTP	--	--	--	--	--	--
MH013	8/24/2015			LPTP	No QC	LPTP	--	--	--	--	--	--
LPTP Permeate	8/23/2015			LPTP	No QC	LPTP	--	--	--	--	--	--
MH013	8/23/2015			LPTP	No QC	LPTP	--	--	--	--	--	--
LPTP Permeate	8/22/2015			LPTP	No QC	LPTP	--	--	--	--	--	--
MH013	8/22/2015			LPTP	No QC	LPTP	--	--	--	--	--	--
LPTP Permeate	8/21/2015			LPTP	No QC	LPTP	--	--	--	--	--	--
MH013	8/21/2015			LPTP	No QC	LPTP	--	--	--	--	--	--
LPTP Permeate	8/20/2015			LPTP	No QC	LPTP	--	--	--	--	--	--
MH013	8/20/2015			LPTP	No QC	LPTP	--	--	--	--	--	--
LPTP Permeate	8/19/2015			LPTP	No QC	LPTP	--	--	--	--	--	--
MH013	8/19/2015			LPTP	No QC	LPTP	--	--	--	--	--	--
MH013	8/18/2015	9:30 AM	11:50 PM	Pace	Validated	60200905	--	--	--	--	--	--
MH013	8/18/2015	9:30 AM	11:50 PM	Pace	Validated	60200905	--	--	--	--	--	--
MH013	8/18/2015	9:30 AM	11:50 PM	Pace	Validated	60200931	ND	101 ~~ND~~	ND	ND	ND	ND
LPTP Permeate	8/18/2015			LPTP	No QC	LPTP	--	--	--	--	--	--
MH013	8/18/2015			LPTP	No QC	LPTP	--	--	--	--	--	--

MSD 033531

Table 1
LPTP Discharge Samples
Bridgeton Landfill

						Parameter	Benzidine	Benzo(a)pyrene	Benzo(b)fluoranthene	Benzo(g,h,i)perylene	Benzo(k)fluoranthene	Bis(2-chloroethoxy) methane
						Total or Dissolved	NA	NA	NA	NA	NA	NA
						Permit Limitation/Surcharge Threshold						
Location	Date	Start Composite	End Composite	Lab Name	Data Status	Lab Report	ug/l	ug/l	ug/l	ug/l	ug/l	ug/l
LPTP Permeate	9/06/2015			LPTP	No QC	LPTP	--	--	--	--	--	--
MH013	9/06/2015			LPTP	No QC	LPTP	--	--	--	--	--	--
LPTP Permeate	9/05/2015			LPTP	No QC	LPTP	--	--	--	--	--	--
MH013	9/05/2015			LPTP	No QC	LPTP	--	--	--	--	--	--
LPTP Permeate	9/04/2015			LPTP	No QC	LPTP	--	--	--	--	--	--
MH013	9/04/2015			LPTP	No QC	LPTP	--	--	--	--	--	--
LPTP Permeate	9/03/2015			LPTP	No QC	LPTP	--	--	--	--	--	--
MH013	9/03/2015			LPTP	No QC	LPTP	--	--	--	--	--	--
LPTP Permeate	9/02/2015			LPTP	No QC	LPTP	--	--	--	--	--	--
MH013	9/02/2015			LPTP	No QC	LPTP	--	--	--	--	--	--
LPTP Permeate	9/01/2015			LPTP	No QC	LPTP	--	--	--	--	--	--
MH013	9/01/2015			LPTP	No QC	LPTP	--	--	--	--	--	--
LPTP Permeate	8/31/2015			LPTP	No QC	LPTP	--	--	--	--	--	--
MH013	8/31/2015			LPTP	No QC	LPTP	--	--	--	--	--	--
LPTP Permeate	8/30/2015			LPTP	No QC	LPTP	--	--	--	--	--	--
MH013	8/30/2015			LPTP	No QC	LPTP	--	--	--	--	--	--
LPTP Permeate	8/29/2015			LPTP	No QC	LPTP	--	--	--	--	--	--
MH013	8/29/2015			LPTP	No QC	LPTP	--	--	--	--	--	--
LPTP Permeate	8/28/2015			LPTP	No QC	LPTP	--	--	--	--	--	--
MH013	8/28/2015			LPTP	No QC	LPTP	--	--	--	--	--	--
LPTP Permeate	8/27/2015			LPTP	No QC	LPTP	--	--	--	--	--	--
MH013	8/27/2015			LPTP	No QC	LPTP	--	--	--	--	--	--
LPTP Permeate	8/26/2015			LPTP	No QC	LPTP	--	--	--	--	--	--
MH013	8/26/2015			LPTP	No QC	LPTP	--	--	--	--	--	--
LPTP Permeate	8/24/2015			LPTP	No QC	LPTP	--	--	--	--	--	--
MH013	8/24/2015			LPTP	No QC	LPTP	--	--	--	--	--	--
LPTP Permeate	8/23/2015			LPTP	No QC	LPTP	--	--	--	--	--	--
MH013	8/23/2015			LPTP	No QC	LPTP	--	--	--	--	--	--
LPTP Permeate	8/22/2015			LPTP	No QC	LPTP	--	--	--	--	--	--
MH013	8/22/2015			LPTP	No QC	LPTP	--	--	--	--	--	--
LPTP Permeate	8/21/2015			LPTP	No QC	LPTP	--	--	--	--	--	--
MH013	8/21/2015			LPTP	No QC	LPTP	--	--	--	--	--	--
LPTP Permeate	8/20/2015			LPTP	No QC	LPTP	--	--	--	--	--	--
MH013	8/20/2015			LPTP	No QC	LPTP	--	--	--	--	--	--
LPTP Permeate	8/19/2015			LPTP	No QC	LPTP	--	--	--	--	--	--
MH013	8/19/2015			LPTP	No QC	LPTP	--	--	--	--	--	--
MH013	8/18/2015	9:30 AM	11:50 PM	Pace	Validated	60200905	--	--	--	--	--	--
MH013	8/18/2015	9:30 AM	11:50 PM	Pace	Validated	60200905	--	--	--	--	--	--
MH013	8/18/2015	9:30 AM	11:50 PM	Pace	Validated	60200931	ND	ND	ND	ND	ND	ND
LPTP Permeate	8/18/2015			LPTP	No QC	LPTP	--	--	--	--	--	--
MH013	8/18/2015			LPTP	No QC	LPTP	--	--	--	--	--	--

MSD 033532

Table 1
LPTP Discharge Samples
Bridgeton Landfill

						Parameter	Bis(2-chloroethyl)ether	Bis(2-chloroisopropyl)ether	Bis(2-ethylhexyl)phthalate	Butylbenzylphthalate	Chrysene	Dibenzo(a,h)anthracene
						Total or Dissolved	NA	NA	NA	NA	NA	NA
						Permit Limitation/Discharge Threshold						
Location	Date	Start Composite	End Composite	Lab Name	Data Status	Lab Report	ug/l	ug/l	ug/l	ug/l	ug/l	ug/l
LPTP Permeate	9/06/2015			LPTP	No QC	LPTP	--	--	--	--	--	--
MH013	9/06/2015			LPTP	No QC	LPTP	--	--	--	--	--	--
LPTP Permeate	9/05/2015			LPTP	No QC	LPTP	--	--	--	--	--	--
MH013	9/05/2015			LPTP	No QC	LPTP	--	--	--	--	--	--
LPTP Permeate	9/04/2015			LPTP	No QC	LPTP	--	--	--	--	--	--
MH013	9/04/2015			LPTP	No QC	LPTP	--	--	--	--	--	--
LPTP Permeate	9/03/2015			LPTP	No QC	LPTP	--	--	--	--	--	--
MH013	9/03/2015			LPTP	No QC	LPTP	--	--	--	--	--	--
LPTP Permeate	9/02/2015			LPTP	No QC	LPTP	--	--	--	--	--	--
MH013	9/02/2015			LPTP	No QC	LPTP	--	--	--	--	--	--
LPTP Permeate	9/01/2015			LPTP	No QC	LPTP	--	--	--	--	--	--
MH013	9/01/2015			LPTP	No QC	LPTP	--	--	--	--	--	--
LPTP Permeate	8/31/2015			LPTP	No QC	LPTP	--	--	--	--	--	--
MH013	8/31/2015			LPTP	No QC	LPTP	--	--	--	--	--	--
LPTP Permeate	8/30/2015			LPTP	No QC	LPTP	--	--	--	--	--	--
MH013	8/30/2015			LPTP	No QC	LPTP	--	--	--	--	--	--
LPTP Permeate	8/29/2015			LPTP	No QC	LPTP	--	--	--	--	--	--
MH013	8/29/2015			LPTP	No QC	LPTP	--	--	--	--	--	--
LPTP Permeate	8/28/2015			LPTP	No QC	LPTP	--	--	--	--	--	--
MH013	8/28/2015			LPTP	No QC	LPTP	--	--	--	--	--	--
LPTP Permeate	8/27/2015			LPTP	No QC	LPTP	--	--	--	--	--	--
MH013	8/27/2015			LPTP	No QC	LPTP	--	--	--	--	--	--
LPTP Permeate	8/26/2015			LPTP	No QC	LPTP	--	--	--	--	--	--
MH013	8/26/2015			LPTP	No QC	LPTP	--	--	--	--	--	--
LPTP Permeate	8/24/2015			LPTP	No QC	LPTP	--	--	--	--	--	--
MH013	8/24/2015			LPTP	No QC	LPTP	--	--	--	--	--	--
LPTP Permeate	8/23/2015			LPTP	No QC	LPTP	--	--	--	--	--	--
MH013	8/23/2015			LPTP	No QC	LPTP	--	--	--	--	--	--
LPTP Permeate	8/22/2015			LPTP	No QC	LPTP	--	--	--	--	--	--
MH013	8/22/2015			LPTP	No QC	LPTP	--	--	--	--	--	--
LPTP Permeate	8/21/2015			LPTP	No QC	LPTP	--	--	--	--	--	--
MH013	8/21/2015			LPTP	No QC	LPTP	--	--	--	--	--	--
LPTP Permeate	8/20/2015			LPTP	No QC	LPTP	--	--	--	--	--	--
MH013	8/20/2015			LPTP	No QC	LPTP	--	--	--	--	--	--
LPTP Permeate	8/19/2015			LPTP	No QC	LPTP	--	--	--	--	--	--
MH013	8/19/2015			LPTP	No QC	LPTP	--	--	--	--	--	--
MH013	8/18/2015	9:30 AM	11:50 PM	Pace	Validated	60200905	--	--	--	--	--	--
MH013	8/18/2015	9:30 AM	11:50 PM	Pace	Validated	60200905	--	--	--	--	--	--
MH013	8/18/2015	9:30 AM	11:50 PM	Pace	Validated	60200931	ND	ND	ND	ND	ND	ND
LPTP Permeate	8/18/2015			LPTP	No QC	LPTP	--	--	--	--	--	--
MH013	8/18/2015			LPTP	No QC	LPTP	--	--	--	--	--	--

MSD 033533

Table 1
LPTP Discharge Samples
Bridgeton Landfill

						Parameter	Diethyl phthalate	Dimethyl phthalate	Di-n-butyl phthalate	Di-n-octyl phthalate	Fluoranthene	Fluorene
						Total or Dissolved	NA	NA	NA	NA	NA	NA
						Permit Limitation/Discharge Threshold						
Location	Date	Start Composite	End Composite	Lab Name	Data Status	Lab Report	ug/l	ug/l	ug/l	ug/l	ug/l	ug/l
LPTP Permeate	9/06/2015			LPTP	No QC	LPTP	--	--	--	--	--	--
MH013	9/06/2015			LPTP	No QC	LPTP	--	--	--	--	--	--
LPTP Permeate	9/05/2015			LPTP	No QC	LPTP	--	--	--	--	--	--
MH013	9/05/2015			LPTP	No QC	LPTP	--	--	--	--	--	--
LPTP Permeate	9/04/2015			LPTP	No QC	LPTP	--	--	--	--	--	--
MH013	9/04/2015			LPTP	No QC	LPTP	--	--	--	--	--	--
LPTP Permeate	9/03/2015			LPTP	No QC	LPTP	--	--	--	--	--	--
MH013	9/03/2015			LPTP	No QC	LPTP	--	--	--	--	--	--
LPTP Permeate	9/02/2015			LPTP	No QC	LPTP	--	--	--	--	--	--
MH013	9/02/2015			LPTP	No QC	LPTP	--	--	--	--	--	--
LPTP Permeate	9/01/2015			LPTP	No QC	LPTP	--	--	--	--	--	--
MH013	9/01/2015			LPTP	No QC	LPTP	--	--	--	--	--	--
LPTP Permeate	8/31/2015			LPTP	No QC	LPTP	--	--	--	--	--	--
MH013	8/31/2015			LPTP	No QC	LPTP	--	--	--	--	--	--
LPTP Permeate	8/30/2015			LPTP	No QC	LPTP	--	--	--	--	--	--
MH013	8/30/2015			LPTP	No QC	LPTP	--	--	--	--	--	--
LPTP Permeate	8/29/2015			LPTP	No QC	LPTP	--	--	--	--	--	--
MH013	8/29/2015			LPTP	No QC	LPTP	--	--	--	--	--	--
LPTP Permeate	8/28/2015			LPTP	No QC	LPTP	--	--	--	--	--	--
MH013	8/28/2015			LPTP	No QC	LPTP	--	--	--	--	--	--
LPTP Permeate	8/27/2015			LPTP	No QC	LPTP	--	--	--	--	--	--
MH013	8/27/2015			LPTP	No QC	LPTP	--	--	--	--	--	--
LPTP Permeate	8/26/2015			LPTP	No QC	LPTP	--	--	--	--	--	--
MH013	8/26/2015			LPTP	No QC	LPTP	--	--	--	--	--	--
LPTP Permeate	8/24/2015			LPTP	No QC	LPTP	--	--	--	--	--	--
MH013	8/24/2015			LPTP	No QC	LPTP	--	--	--	--	--	--
LPTP Permeate	8/23/2015			LPTP	No QC	LPTP	--	--	--	--	--	--
MH013	8/23/2015			LPTP	No QC	LPTP	--	--	--	--	--	--
LPTP Permeate	8/22/2015			LPTP	No QC	LPTP	--	--	--	--	--	--
MH013	8/22/2015			LPTP	No QC	LPTP	--	--	--	--	--	--
LPTP Permeate	8/21/2015			LPTP	No QC	LPTP	--	--	--	--	--	--
MH013	8/21/2015			LPTP	No QC	LPTP	--	--	--	--	--	--
LPTP Permeate	8/20/2015			LPTP	No QC	LPTP	--	--	--	--	--	--
MH013	8/20/2015			LPTP	No QC	LPTP	--	--	--	--	--	--
LPTP Permeate	8/19/2015			LPTP	No QC	LPTP	--	--	--	--	--	--
MH013	8/19/2015			LPTP	No QC	LPTP	--	--	--	--	--	--
MH013	8/18/2015	9:30 AM	11:50 PM	Pace	Validated	60200905	--	--	--	--	--	--
MH013	8/18/2015	9:30 AM	11:50 PM	Pace	Validated	60200905	--	--	--	--	--	--
MH013	8/18/2015	9:30 AM	11:50 PM	Pace	Validated	60200931	ND	ND	ND	ND	ND	ND
LPTP Permeate	8/18/2015			LPTP	No QC	LPTP	--	--	--	--	--	--
MH013	8/18/2015			LPTP	No QC	LPTP	--	--	--	--	--	--

MSD 033534

Table 1
LPTP Discharge Samples
Bridgeton Landfill

						Parameter	Hexachlorobenzene	Hexachlorobutadiene	Hexachlorocyclopentadiene	Hexachloroethane	Indeno(1,2,3-cd)pyrene	Isophorone
						Total or Dissolved	NA	NA	NA	NA	NA	NA
						Permit Limitation/Surcharge Threshold						
Location	Date	Start Composite	End Composite	Lab Name	Data Status	Lab Report	ug/l	ug/l	ug/l	ug/l	ug/l	ug/l
LPTP Permeate	9/06/2015			LPTP	No QC	LPTP	--	--	--	--	--	--
MH013	9/06/2015			LPTP	No QC	LPTP	--	--	--	--	--	--
LPTP Permeate	9/05/2015			LPTP	No QC	LPTP	--	--	--	--	--	--
MH013	9/05/2015			LPTP	No QC	LPTP	--	--	--	--	--	--
LPTP Permeate	9/04/2015			LPTP	No QC	LPTP	--	--	--	--	--	--
MH013	9/04/2015			LPTP	No QC	LPTP	--	--	--	--	--	--
LPTP Permeate	9/03/2015			LPTP	No QC	LPTP	--	--	--	--	--	--
MH013	9/03/2015			LPTP	No QC	LPTP	--	--	--	--	--	--
LPTP Permeate	9/02/2015			LPTP	No QC	LPTP	--	--	--	--	--	--
MH013	9/02/2015			LPTP	No QC	LPTP	--	--	--	--	--	--
LPTP Permeate	9/01/2015			LPTP	No QC	LPTP	--	--	--	--	--	--
MH013	9/01/2015			LPTP	No QC	LPTP	--	--	--	--	--	--
LPTP Permeate	8/31/2015			LPTP	No QC	LPTP	--	--	--	--	--	--
MH013	8/31/2015			LPTP	No QC	LPTP	--	--	--	--	--	--
LPTP Permeate	8/30/2015			LPTP	No QC	LPTP	--	--	--	--	--	--
MH013	8/30/2015			LPTP	No QC	LPTP	--	--	--	--	--	--
LPTP Permeate	8/29/2015			LPTP	No QC	LPTP	--	--	--	--	--	--
MH013	8/29/2015			LPTP	No QC	LPTP	--	--	--	--	--	--
LPTP Permeate	8/28/2015			LPTP	No QC	LPTP	--	--	--	--	--	--
MH013	8/28/2015			LPTP	No QC	LPTP	--	--	--	--	--	--
LPTP Permeate	8/27/2015			LPTP	No QC	LPTP	--	--	--	--	--	--
MH013	8/27/2015			LPTP	No QC	LPTP	--	--	--	--	--	--
LPTP Permeate	8/26/2015			LPTP	No QC	LPTP	--	--	--	--	--	--
MH013	8/26/2015			LPTP	No QC	LPTP	--	--	--	--	--	--
LPTP Permeate	8/24/2015			LPTP	No QC	LPTP	--	--	--	--	--	--
MH013	8/24/2015			LPTP	No QC	LPTP	--	--	--	--	--	--
LPTP Permeate	8/23/2015			LPTP	No QC	LPTP	--	--	--	--	--	--
MH013	8/23/2015			LPTP	No QC	LPTP	--	--	--	--	--	--
LPTP Permeate	8/22/2015			LPTP	No QC	LPTP	--	--	--	--	--	--
MH013	8/22/2015			LPTP	No QC	LPTP	--	--	--	--	--	--
LPTP Permeate	8/21/2015			LPTP	No QC	LPTP	--	--	--	--	--	--
MH013	8/21/2015			LPTP	No QC	LPTP	--	--	--	--	--	--
LPTP Permeate	8/20/2015			LPTP	No QC	LPTP	--	--	--	--	--	--
MH013	8/20/2015			LPTP	No QC	LPTP	--	--	--	--	--	--
LPTP Permeate	8/19/2015			LPTP	No QC	LPTP	--	--	--	--	--	--
MH013	8/19/2015			LPTP	No QC	LPTP	--	--	--	--	--	--
MH013	8/18/2015	9:30 AM	11:50 PM	Pace	Validated	60200905	--	--	--	--	--	--
MH013	8/18/2015	9:30 AM	11:50 PM	Pace	Validated	60200905	--	--	--	--	--	--
MH013	8/18/2015	9:30 AM	11:50 PM	Pace	Validated	60200931	ND	<101 ~~ND~~	ND	ND	ND	ND
LPTP Permeate	8/18/2015			LPTP	No QC	LPTP	--	--	--	--	--	--
MH013	8/18/2015			LPTP	No QC	LPTP	--	--	--	--	--	--

MSD 033535

Table 1
LPTP Discharge Samples
Bridgeton Landfill

						Parameter	Naphthalene	Nitrobenzene	N-Nitrosodiethylamine	N-Nitrosodipropylamine	N-Nitrosodiphenylamine	Pentachlorophenol
						Total or Dissolved	NA	NA	NA	NA	NA	NA
						Permit Limitation/Surcharge Threshold						
Location	Date	Start Composite	End Composite	Lab Name	Data Status	Lab Report	ug/l	ug/l	ug/l	ug/l	ug/l	ug/l
LPTP Permeate	9/06/2015			LPTP	No QC	LPTP	--	--	--	--	--	--
MH013	9/06/2015			LPTP	No QC	LPTP	--	--	--	--	--	--
LPTP Permeate	9/05/2015			LPTP	No QC	LPTP	--	--	--	--	--	--
MH013	9/05/2015			LPTP	No QC	LPTP	--	--	--	--	--	--
LPTP Permeate	9/04/2015			LPTP	No QC	LPTP	--	--	--	--	--	--
MH013	9/04/2015			LPTP	No QC	LPTP	--	--	--	--	--	--
LPTP Permeate	9/03/2015			LPTP	No QC	LPTP	--	--	--	--	--	--
MH013	9/03/2015			LPTP	No QC	LPTP	--	--	--	--	--	--
LPTP Permeate	9/02/2015			LPTP	No QC	LPTP	--	--	--	--	--	--
MH013	9/02/2015			LPTP	No QC	LPTP	--	--	--	--	--	--
LPTP Permeate	9/01/2015			LPTP	No QC	LPTP	--	--	--	--	--	--
MH013	9/01/2015			LPTP	No QC	LPTP	--	--	--	--	--	--
LPTP Permeate	8/31/2015			LPTP	No QC	LPTP	--	--	--	--	--	--
MH013	8/31/2015			LPTP	No QC	LPTP	--	--	--	--	--	--
LPTP Permeate	8/30/2015			LPTP	No QC	LPTP	--	--	--	--	--	--
MH013	8/30/2015			LPTP	No QC	LPTP	--	--	--	--	--	--
LPTP Permeate	8/29/2015			LPTP	No QC	LPTP	--	--	--	--	--	--
MH013	8/29/2015			LPTP	No QC	LPTP	--	--	--	--	--	--
LPTP Permeate	8/28/2015			LPTP	No QC	LPTP	--	--	--	--	--	--
MH013	8/28/2015			LPTP	No QC	LPTP	--	--	--	--	--	--
LPTP Permeate	8/27/2015			LPTP	No QC	LPTP	--	--	--	--	--	--
MH013	8/27/2015			LPTP	No QC	LPTP	--	--	--	--	--	--
LPTP Permeate	8/26/2015			LPTP	No QC	LPTP	--	--	--	--	--	--
MH013	8/26/2015			LPTP	No QC	LPTP	--	--	--	--	--	--
LPTP Permeate	8/24/2015			LPTP	No QC	LPTP	--	--	--	--	--	--
MH013	8/24/2015			LPTP	No QC	LPTP	--	--	--	--	--	--
LPTP Permeate	8/23/2015			LPTP	No QC	LPTP	--	--	--	--	--	--
MH013	8/23/2015			LPTP	No QC	LPTP	--	--	--	--	--	--
LPTP Permeate	8/22/2015			LPTP	No QC	LPTP	--	--	--	--	--	--
MH013	8/22/2015			LPTP	No QC	LPTP	--	--	--	--	--	--
LPTP Permeate	8/21/2015			LPTP	No QC	LPTP	--	--	--	--	--	--
MH013	8/21/2015			LPTP	No QC	LPTP	--	--	--	--	--	--
LPTP Permeate	8/20/2015			LPTP	No QC	LPTP	--	--	--	--	--	--
MH013	8/20/2015			LPTP	No QC	LPTP	--	--	--	--	--	--
LPTP Permeate	8/19/2015			LPTP	No QC	LPTP	--	--	--	--	--	--
MH013	8/19/2015			LPTP	No QC	LPTP	--	--	--	--	--	--
MH013	8/18/2015	9:30 AM	11:50 PM	Pace	Validated	60200905	--	--	--	--	--	--
MH013	8/18/2015	9:30 AM	11:50 PM	Pace	Validated	60200905	--	--	--	--	--	--
MH013	8/18/2015	9:30 AM	11:50 PM	Pace	Validated	60200931	<10 ~~ND~~	ND	ND	ND	ND	<10 ~~ND~~
LPTP Permeate	8/18/2015			LPTP	No QC	LPTP	--	--	--	--	--	--
MH013	8/18/2015			LPTP	No QC	LPTP	--	--	--	--	--	--

MSD 033536

Table 1
LPTP Discharge Samples
Bridgeton Landfill

						Parameter	Phenanthrene	Phenol	Pyrene	1,1,1-Trichloroethane	1,1,2,2-Tetrachloroethane	1,1,2-Trichloroethane
						Total or Dissolved	NA	NA	NA	NA	NA	NA
						Permit Limitation/Surcharge Threshold						
Location	Date	Start Composite	End Composite	Lab Name	Data Status	Lab Report	ug/l	ug/l	ug/l	ug/l	ug/l	ug/l
LPTP Permeate	9/06/2015			LPTP	No QC	LPTP	--	--	--	--	--	--
MH013	9/06/2015			LPTP	No QC	LPTP	--	--	--	--	--	--
LPTP Permeate	9/05/2015			LPTP	No QC	LPTP	--	--	--	--	--	--
MH013	9/05/2015			LPTP	No QC	LPTP	--	--	--	--	--	--
LPTP Permeate	9/04/2015			LPTP	No QC	LPTP	--	--	--	--	--	--
MH013	9/04/2015			LPTP	No QC	LPTP	--	--	--	--	--	--
LPTP Permeate	9/03/2015			LPTP	No QC	LPTP	--	--	--	--	--	--
MH013	9/03/2015			LPTP	No QC	LPTP	--	--	--	--	--	--
LPTP Permeate	9/02/2015			LPTP	No QC	LPTP	--	--	--	--	--	--
MH013	9/02/2015			LPTP	No QC	LPTP	--	--	--	--	--	--
LPTP Permeate	9/01/2015			LPTP	No QC	LPTP	--	--	--	--	--	--
MH013	9/01/2015			LPTP	No QC	LPTP	--	--	--	--	--	--
LPTP Permeate	8/31/2015			LPTP	No QC	LPTP	--	--	--	--	--	--
MH013	8/31/2015			LPTP	No QC	LPTP	--	--	--	--	--	--
LPTP Permeate	8/30/2015			LPTP	No QC	LPTP	--	--	--	--	--	--
MH013	8/30/2015			LPTP	No QC	LPTP	--	--	--	--	--	--
LPTP Permeate	8/29/2015			LPTP	No QC	LPTP	--	--	--	--	--	--
MH013	8/29/2015			LPTP	No QC	LPTP	--	--	--	--	--	--
LPTP Permeate	8/28/2015			LPTP	No QC	LPTP	--	--	--	--	--	--
MH013	8/28/2015			LPTP	No QC	LPTP	--	--	--	--	--	--
LPTP Permeate	8/27/2015			LPTP	No QC	LPTP	--	--	--	--	--	--
MH013	8/27/2015			LPTP	No QC	LPTP	--	--	--	--	--	--
LPTP Permeate	8/26/2015			LPTP	No QC	LPTP	--	--	--	--	--	--
MH013	8/26/2015			LPTP	No QC	LPTP	--	--	--	--	--	--
LPTP Permeate	8/24/2015			LPTP	No QC	LPTP	--	--	--	--	--	--
MH013	8/24/2015			LPTP	No QC	LPTP	--	--	--	--	--	--
LPTP Permeate	8/23/2015			LPTP	No QC	LPTP	--	--	--	--	--	--
MH013	8/23/2015			LPTP	No QC	LPTP	--	--	--	--	--	--
LPTP Permeate	8/22/2015			LPTP	No QC	LPTP	--	--	--	--	--	--
MH013	8/22/2015			LPTP	No QC	LPTP	--	--	--	--	--	--
LPTP Permeate	8/21/2015			LPTP	No QC	LPTP	--	--	--	--	--	--
MH013	8/21/2015			LPTP	No QC	LPTP	--	--	--	--	--	--
LPTP Permeate	8/20/2015			LPTP	No QC	LPTP	--	--	--	--	--	--
MH013	8/20/2015			LPTP	No QC	LPTP	--	--	--	--	--	--
LPTP Permeate	8/19/2015			LPTP	No QC	LPTP	--	--	--	--	--	--
MH013	8/19/2015			LPTP	No QC	LPTP	--	--	--	--	--	--
MH013	8/18/2015	9:30 AM	11:50 PM	Pace	Validated	60200905	--	--	--	--	--	--
MH013	8/18/2015	9:30 AM	11:50 PM	Pace	Validated	60200905	--	--	--	--	--	--
MH013	8/18/2015	9:30 AM	11:50 PM	Pace	Validated	60200931	ND	705	ND	ND	410 ~~ND~~	ND
LPTP Permeate	8/18/2015			LPTP	No QC	LPTP	--	--	--	--	--	--
MH013	8/18/2015			LPTP	No QC	LPTP	--	--	--	--	--	--

MSD 033537

Table 1
LPTP Discharge Samples
Bridgeton Landfill

						Parameter	1,1-Dichloroethane	1,1-Dichloroethylene	1,2-Dichlorobenzene	1,2-Dichloroethane	1,2-Dichloroethylene, cis	1,2-Dichloroethylene, trans
						Total or Dissolved	NA	NA	NA	NA	NA	NA
						Permit Limitation/Surcharge Threshold						
Location	Date	Start Composite	End Composite	Lab Name	Data Status	Lab Report	ug/l	ug/l	ug/l	ug/l	ug/l	ug/l
LPTP Permeate	9/06/2015			LPTP	No QC	LPTP	--	--	--	--	--	--
MH013	9/06/2015			LPTP	No QC	LPTP	--	--	--	--	--	--
LPTP Permeate	9/05/2015			LPTP	No QC	LPTP	--	--	--	--	--	--
MH013	9/05/2015			LPTP	No QC	LPTP	--	--	--	--	--	--
LPTP Permeate	9/04/2015			LPTP	No QC	LPTP	--	--	--	--	--	--
MH013	9/04/2015			LPTP	No QC	LPTP	--	--	--	--	--	--
LPTP Permeate	9/03/2015			LPTP	No QC	LPTP	--	--	--	--	--	--
MH013	9/03/2015			LPTP	No QC	LPTP	--	--	--	--	--	--
LPTP Permeate	9/02/2015			LPTP	No QC	LPTP	--	--	--	--	--	--
MH013	9/02/2015			LPTP	No QC	LPTP	--	--	--	--	--	--
LPTP Permeate	9/01/2015			LPTP	No QC	LPTP	--	--	--	--	--	--
MH013	9/01/2015			LPTP	No QC	LPTP	--	--	--	--	--	--
LPTP Permeate	8/31/2015			LPTP	No QC	LPTP	--	--	--	--	--	--
MH013	8/31/2015			LPTP	No QC	LPTP	--	--	--	--	--	--
LPTP Permeate	8/30/2015			LPTP	No QC	LPTP	--	--	--	--	--	--
MH013	8/30/2015			LPTP	No QC	LPTP	--	--	--	--	--	--
LPTP Permeate	8/29/2015			LPTP	No QC	LPTP	--	--	--	--	--	--
MH013	8/29/2015			LPTP	No QC	LPTP	--	--	--	--	--	--
LPTP Permeate	8/28/2015			LPTP	No QC	LPTP	--	--	--	--	--	--
MH013	8/28/2015			LPTP	No QC	LPTP	--	--	--	--	--	--
LPTP Permeate	8/27/2015			LPTP	No QC	LPTP	--	--	--	--	--	--
MH013	8/27/2015			LPTP	No QC	LPTP	--	--	--	--	--	--
LPTP Permeate	8/26/2015			LPTP	No QC	LPTP	--	--	--	--	--	--
MH013	8/26/2015			LPTP	No QC	LPTP	--	--	--	--	--	--
LPTP Permeate	8/24/2015			LPTP	No QC	LPTP	--	--	--	--	--	--
MH013	8/24/2015			LPTP	No QC	LPTP	--	--	--	--	--	--
LPTP Permeate	8/23/2015			LPTP	No QC	LPTP	--	--	--	--	--	--
MH013	8/23/2015			LPTP	No QC	LPTP	--	--	--	--	--	--
LPTP Permeate	8/22/2015			LPTP	No QC	LPTP	--	--	--	--	--	--
MH013	8/22/2015			LPTP	No QC	LPTP	--	--	--	--	--	--
LPTP Permeate	8/21/2015			LPTP	No QC	LPTP	--	--	--	--	--	--
MH013	8/21/2015			LPTP	No QC	LPTP	--	--	--	--	--	--
LPTP Permeate	8/20/2015			LPTP	No QC	LPTP	--	--	--	--	--	--
MH013	8/20/2015			LPTP	No QC	LPTP	--	--	--	--	--	--
LPTP Permeate	8/19/2015			LPTP	No QC	LPTP	--	--	--	--	--	--
MH013	8/19/2015			LPTP	No QC	LPTP	--	--	--	--	--	--
MH013	8/18/2015	9:30 AM	11:50 PM	Pace	Validated	60200905	--	--	--	--	--	--
MH013	8/18/2015	9:30 AM	11:50 PM	Pace	Validated	60200905	--	--	--	--	--	--
MH013	8/18/2015	9:30 AM	11:50 PM	Pace	Validated	60200931	ND	ND	<10 ~~ND~~	ND	ND	ND
LPTP Permeate	8/18/2015			LPTP	No QC	LPTP	--	--	--	--	--	--
MH013	8/18/2015			LPTP	No QC	LPTP	--	--	--	--	--	--

MSD 033538

Table 1
LPTP Discharge Samples
Bridgeton Landfill

						Parameter	1,2-Dichloropropane	1,3-Dichloro-1-propene, cis	1,3-Dichloro-1-propene, trans	1,3-Dichlorobenzene	1,4-Dichlorobenzene	2-Chloroethyl vinyl ether
						Total or Dissolved	NA	NA	NA	NA	NA	NA
						Permit Limitation/Surcharge Threshold						
Location	Date	Start Composite	End Composite	Lab Name	Data Status	Lab Report	ug/l	ug/l	ug/l	ug/l	ug/l	ug/l
LPTP Permeate	9/06/2015			LPTP	No QC	LPTP	--	--	--	--	--	--
MH013	9/06/2015			LPTP	No QC	LPTP	--	--	--	--	--	--
LPTP Permeate	9/05/2015			LPTP	No QC	LPTP	--	--	--	--	--	--
MH013	9/05/2015			LPTP	No QC	LPTP	--	--	--	--	--	--
LPTP Permeate	9/04/2015			LPTP	No QC	LPTP	--	--	--	--	--	--
MH013	9/04/2015			LPTP	No QC	LPTP	--	--	--	--	--	--
LPTP Permeate	9/03/2015			LPTP	No QC	LPTP	--	--	--	--	--	--
MH013	9/03/2015			LPTP	No QC	LPTP	--	--	--	--	--	--
LPTP Permeate	9/02/2015			LPTP	No QC	LPTP	--	--	--	--	--	--
MH013	9/02/2015			LPTP	No QC	LPTP	--	--	--	--	--	--
LPTP Permeate	9/01/2015			LPTP	No QC	LPTP	--	--	--	--	--	--
MH013	9/01/2015			LPTP	No QC	LPTP	--	--	--	--	--	--
LPTP Permeate	8/31/2015			LPTP	No QC	LPTP	--	--	--	--	--	--
MH013	8/31/2015			LPTP	No QC	LPTP	--	--	--	--	--	--
LPTP Permeate	8/30/2015			LPTP	No QC	LPTP	--	--	--	--	--	--
MH013	8/30/2015			LPTP	No QC	LPTP	--	--	--	--	--	--
LPTP Permeate	8/29/2015			LPTP	No QC	LPTP	--	--	--	--	--	--
MH013	8/29/2015			LPTP	No QC	LPTP	--	--	--	--	--	--
LPTP Permeate	8/28/2015			LPTP	No QC	LPTP	--	--	--	--	--	--
MH013	8/28/2015			LPTP	No QC	LPTP	--	--	--	--	--	--
LPTP Permeate	8/27/2015			LPTP	No QC	LPTP	--	--	--	--	--	--
MH013	8/27/2015			LPTP	No QC	LPTP	--	--	--	--	--	--
LPTP Permeate	8/26/2015			LPTP	No QC	LPTP	--	--	--	--	--	--
MH013	8/26/2015			LPTP	No QC	LPTP	--	--	--	--	--	--
LPTP Permeate	8/24/2015			LPTP	No QC	LPTP	--	--	--	--	--	--
MH013	8/24/2015			LPTP	No QC	LPTP	--	--	--	--	--	--
LPTP Permeate	8/23/2015			LPTP	No QC	LPTP	--	--	--	--	--	--
MH013	8/23/2015			LPTP	No QC	LPTP	--	--	--	--	--	--
LPTP Permeate	8/22/2015			LPTP	No QC	LPTP	--	--	--	--	--	--
MH013	8/22/2015			LPTP	No QC	LPTP	--	--	--	--	--	--
LPTP Permeate	8/21/2015			LPTP	No QC	LPTP	--	--	--	--	--	--
MH013	8/21/2015			LPTP	No QC	LPTP	--	--	--	--	--	--
LPTP Permeate	8/20/2015			LPTP	No QC	LPTP	--	--	--	--	--	--
MH013	8/20/2015			LPTP	No QC	LPTP	--	--	--	--	--	--
LPTP Permeate	8/19/2015			LPTP	No QC	LPTP	--	--	--	--	--	--
MH013	8/19/2015			LPTP	No QC	LPTP	--	--	--	--	--	--
MH013	8/18/2015	9:30 AM	11:50 PM	Pace	Validated	60200905	--	--	--	--	--	--
MH013	8/18/2015	9:30 AM	11:50 PM	Pace	Validated	60200905	--	--	--	--	--	--
MH013	8/18/2015	9:30 AM	11:50 PM	Pace	Validated	60200931	ND	ND	ND	ND	<10 ~~ND~~	ND
LPTP Permeate	8/18/2015			LPTP	No QC	LPTP	--	--	--	--	--	--
MH013	8/18/2015			LPTP	No QC	LPTP	--	--	--	--	--	--

MSD 033539

Table 1
LPTP Discharge Samples
Bridgeton Landfill

						Parameter	Benzene	Bromodichloromethane	Bromoform	Bromomethane	Carbon tetrachloride	Chlorobenzene
						Total or Dissolved	NA	NA	NA	NA	NA	NA
						Permit Limitation/Surcharge Threshold	140 ug/l					
Location	Date	Start Composite	End Composite	Lab Name	Data Status	Lab Report	ug/l	ug/l	ug/l	ug/l	ug/l	ug/l
LPTP Permeate	9/06/2015			LPTP	No QC	LPTP	--	--	--	--	--	--
MH013	9/06/2015			LPTP	No QC	LPTP	--	--	--	--	--	--
LPTP Permeate	9/05/2015			LPTP	No QC	LPTP	--	--	--	--	--	--
MH013	9/05/2015			LPTP	No QC	LPTP	--	--	--	--	--	--
LPTP Permeate	9/04/2015			LPTP	No QC	LPTP	--	--	--	--	--	--
MH013	9/04/2015			LPTP	No QC	LPTP	--	--	--	--	--	--
LPTP Permeate	9/03/2015			LPTP	No QC	LPTP	--	--	--	--	--	--
MH013	9/03/2015			LPTP	No QC	LPTP	--	--	--	--	--	--
LPTP Permeate	9/02/2015			LPTP	No QC	LPTP	--	--	--	--	--	--
MH013	9/02/2015			LPTP	No QC	LPTP	--	--	--	--	--	--
LPTP Permeate	9/01/2015			LPTP	No QC	LPTP	--	--	--	--	--	--
MH013	9/01/2015			LPTP	No QC	LPTP	--	--	--	--	--	--
LPTP Permeate	8/31/2015			LPTP	No QC	LPTP	--	--	--	--	--	--
MH013	8/31/2015			LPTP	No QC	LPTP	--	--	--	--	--	--
LPTP Permeate	8/30/2015			LPTP	No QC	LPTP	--	--	--	--	--	--
MH013	8/30/2015			LPTP	No QC	LPTP	--	--	--	--	--	--
LPTP Permeate	8/29/2015			LPTP	No QC	LPTP	--	--	--	--	--	--
MH013	8/29/2015			LPTP	No QC	LPTP	--	--	--	--	--	--
LPTP Permeate	8/28/2015			LPTP	No QC	LPTP	--	--	--	--	--	--
MH013	8/28/2015			LPTP	No QC	LPTP	--	--	--	--	--	--
LPTP Permeate	8/27/2015			LPTP	No QC	LPTP	--	--	--	--	--	--
MH013	8/27/2015			LPTP	No QC	LPTP	--	--	--	--	--	--
LPTP Permeate	8/26/2015			LPTP	No QC	LPTP	--	--	--	--	--	--
MH013	8/26/2015			LPTP	No QC	LPTP	--	--	--	--	--	--
LPTP Permeate	8/24/2015			LPTP	No QC	LPTP	--	--	--	--	--	--
MH013	8/24/2015			LPTP	No QC	LPTP	--	--	--	--	--	--
LPTP Permeate	8/23/2015			LPTP	No QC	LPTP	--	--	--	--	--	--
MH013	8/23/2015			LPTP	No QC	LPTP	--	--	--	--	--	--
LPTP Permeate	8/22/2015			LPTP	No QC	LPTP	--	--	--	--	--	--
MH013	8/22/2015			LPTP	No QC	LPTP	--	--	--	--	--	--
LPTP Permeate	8/21/2015			LPTP	No QC	LPTP	--	--	--	--	--	--
MH013	8/21/2015			LPTP	No QC	LPTP	--	--	--	--	--	--
LPTP Permeate	8/20/2015			LPTP	No QC	LPTP	--	--	--	--	--	--
MH013	8/20/2015			LPTP	No QC	LPTP	--	--	--	--	--	--
LPTP Permeate	8/19/2015			LPTP	No QC	LPTP	--	--	--	--	--	--
MH013	8/19/2015			LPTP	No QC	LPTP	--	--	--	--	--	--
MH013	8/18/2015	9:30 AM	11:50 PM	Pace	Validated	60200905	--	--	--	--	--	--
MH013	8/18/2015	9:30 AM	11:50 PM	Pace	Validated	60200905	--	--	--	--	--	--
MH013	8/18/2015	9:30 AM	11:50 PM	Pace	Validated	60200931	<10 ~~ND~~	ND	ND	<50 ~~ND~~	ND	<10 ~~ND~~
LPTP Permeate	8/18/2015			LPTP	No QC	LPTP	--	--	--	--	--	--
MH013	8/18/2015			LPTP	No QC	LPTP	--	--	--	--	--	--

MSD 033540

Table 1
LPTP Discharge Samples
Bridgeton Landfill

						Parameter	Chlorodibromomethane	Chloroethane	Chloroform	Chloromethane	Ethylbenzene	Methylene chloride
						Total or Dissolved	NA	NA	NA	NA	NA	NA
						Permit Limitation/Surcharge Threshold						
Location	Date	Start Composite	End Composite	Lab Name	Data Status	Lab Report	ug/l	ug/l	ug/l	ug/l	ug/l	ug/l
LPTP Permeate	9/06/2015			LPTP	No QC	LPTP	--	--	--	--	--	--
MH013	9/06/2015			LPTP	No QC	LPTP	--	--	--	--	--	--
LPTP Permeate	9/05/2015			LPTP	No QC	LPTP	--	--	--	--	--	--
MH013	9/05/2015			LPTP	No QC	LPTP	--	--	--	--	--	--
LPTP Permeate	9/04/2015			LPTP	No QC	LPTP	--	--	--	--	--	--
MH013	9/04/2015			LPTP	No QC	LPTP	--	--	--	--	--	--
LPTP Permeate	9/03/2015			LPTP	No QC	LPTP	--	--	--	--	--	--
MH013	9/03/2015			LPTP	No QC	LPTP	--	--	--	--	--	--
LPTP Permeate	9/02/2015			LPTP	No QC	LPTP	--	--	--	--	--	--
MH013	9/02/2015			LPTP	No QC	LPTP	--	--	--	--	--	--
LPTP Permeate	9/01/2015			LPTP	No QC	LPTP	--	--	--	--	--	--
MH013	9/01/2015			LPTP	No QC	LPTP	--	--	--	--	--	--
LPTP Permeate	8/31/2015			LPTP	No QC	LPTP	--	--	--	--	--	--
MH013	8/31/2015			LPTP	No QC	LPTP	--	--	--	--	--	--
LPTP Permeate	8/30/2015			LPTP	No QC	LPTP	--	--	--	--	--	--
MH013	8/30/2015			LPTP	No QC	LPTP	--	--	--	--	--	--
LPTP Permeate	8/29/2015			LPTP	No QC	LPTP	--	--	--	--	--	--
MH013	8/29/2015			LPTP	No QC	LPTP	--	--	--	--	--	--
LPTP Permeate	8/28/2015			LPTP	No QC	LPTP	--	--	--	--	--	--
MH013	8/28/2015			LPTP	No QC	LPTP	--	--	--	--	--	--
LPTP Permeate	8/27/2015			LPTP	No QC	LPTP	--	--	--	--	--	--
MH013	8/27/2015			LPTP	No QC	LPTP	--	--	--	--	--	--
LPTP Permeate	8/26/2015			LPTP	No QC	LPTP	--	--	--	--	--	--
MH013	8/26/2015			LPTP	No QC	LPTP	--	--	--	--	--	--
LPTP Permeate	8/24/2015			LPTP	No QC	LPTP	--	--	--	--	--	--
MH013	8/24/2015			LPTP	No QC	LPTP	--	--	--	--	--	--
LPTP Permeate	8/23/2015			LPTP	No QC	LPTP	--	--	--	--	--	--
MH013	8/23/2015			LPTP	No QC	LPTP	--	--	--	--	--	--
LPTP Permeate	8/22/2015			LPTP	No QC	LPTP	--	--	--	--	--	--
MH013	8/22/2015			LPTP	No QC	LPTP	--	--	--	--	--	--
LPTP Permeate	8/21/2015			LPTP	No QC	LPTP	--	--	--	--	--	--
MH013	8/21/2015			LPTP	No QC	LPTP	--	--	--	--	--	--
LPTP Permeate	8/20/2015			LPTP	No QC	LPTP	--	--	--	--	--	--
MH013	8/20/2015			LPTP	No QC	LPTP	--	--	--	--	--	--
LPTP Permeate	8/19/2015			LPTP	No QC	LPTP	--	--	--	--	--	--
MH013	8/19/2015			LPTP	No QC	LPTP	--	--	--	--	--	--
MH013	8/18/2015	9:30 AM	11:50 PM	Pace	Validated	60200905	--	--	--	--	--	--
MH013	8/18/2015	9:30 AM	11:50 PM	Pace	Validated	60200905	--	--	--	--	--	--
MH013	8/18/2015	9:30 AM	11:50 PM	Pace	Validated	60200931	ND	ND	ND	ND	<10 ~~ND~~	<10 ~~ND~~
LPTP Permeate	8/18/2015			LPTP	No QC	LPTP	--	--	--	--	--	--
MH013	8/18/2015			LPTP	No QC	LPTP	--	--	--	--	--	--

MSD 033541

Table 1
LPTP Discharge Samples
Bridgeton Landfill

						Parameter	Tetrachloroethylene	Toluene	Trichloroethylene	Trichlorofluoromethane	Vinyl chloride	Xylene, total
						Total or Dissolved	NA	NA	NA	NA	NA	NA
						Permit Limitation/Surcharge Threshold						
Location	Date	Start Composite	End Composite	Lab Name	Data Status	Lab Report	ug/l	ug/l	ug/l	ug/l	ug/l	ug/l
LPTP Permeate	9/06/2015			LPTP	No QC	LPTP	--	--	--	--	--	--
MH013	9/06/2015			LPTP	No QC	LPTP	--	--	--	--	--	--
LPTP Permeate	9/05/2015			LPTP	No QC	LPTP	--	--	--	--	--	--
MH013	9/05/2015			LPTP	No QC	LPTP	--	--	--	--	--	--
LPTP Permeate	9/04/2015			LPTP	No QC	LPTP	--	--	--	--	--	--
MH013	9/04/2015			LPTP	No QC	LPTP	--	--	--	--	--	--
LPTP Permeate	9/03/2015			LPTP	No QC	LPTP	--	--	--	--	--	--
MH013	9/03/2015			LPTP	No QC	LPTP	--	--	--	--	--	--
LPTP Permeate	9/02/2015			LPTP	No QC	LPTP	--	--	--	--	--	--
MH013	9/02/2015			LPTP	No QC	LPTP	--	--	--	--	--	--
LPTP Permeate	9/01/2015			LPTP	No QC	LPTP	--	--	--	--	--	--
MH013	9/01/2015			LPTP	No QC	LPTP	--	--	--	--	--	--
LPTP Permeate	8/31/2015			LPTP	No QC	LPTP	--	--	--	--	--	--
MH013	8/31/2015			LPTP	No QC	LPTP	--	--	--	--	--	--
LPTP Permeate	8/30/2015			LPTP	No QC	LPTP	--	--	--	--	--	--
MH013	8/30/2015			LPTP	No QC	LPTP	--	--	--	--	--	--
LPTP Permeate	8/29/2015			LPTP	No QC	LPTP	--	--	--	--	--	--
MH013	8/29/2015			LPTP	No QC	LPTP	--	--	--	--	--	--
LPTP Permeate	8/28/2015			LPTP	No QC	LPTP	--	--	--	--	--	--
MH013	8/28/2015			LPTP	No QC	LPTP	--	--	--	--	--	--
LPTP Permeate	8/27/2015			LPTP	No QC	LPTP	--	--	--	--	--	--
MH013	8/27/2015			LPTP	No QC	LPTP	--	--	--	--	--	--
LPTP Permeate	8/26/2015			LPTP	No QC	LPTP	--	--	--	--	--	--
MH013	8/26/2015			LPTP	No QC	LPTP	--	--	--	--	--	--
LPTP Permeate	8/24/2015			LPTP	No QC	LPTP	--	--	--	--	--	--
MH013	8/24/2015			LPTP	No QC	LPTP	--	--	--	--	--	--
LPTP Permeate	8/23/2015			LPTP	No QC	LPTP	--	--	--	--	--	--
MH013	8/23/2015			LPTP	No QC	LPTP	--	--	--	--	--	--
LPTP Permeate	8/22/2015			LPTP	No QC	LPTP	--	--	--	--	--	--
MH013	8/22/2015			LPTP	No QC	LPTP	--	--	--	--	--	--
LPTP Permeate	8/21/2015			LPTP	No QC	LPTP	--	--	--	--	--	--
MH013	8/21/2015			LPTP	No QC	LPTP	--	--	--	--	--	--
LPTP Permeate	8/20/2015			LPTP	No QC	LPTP	--	--	--	--	--	--
MH013	8/20/2015			LPTP	No QC	LPTP	--	--	--	--	--	--
LPTP Permeate	8/19/2015			LPTP	No QC	LPTP	--	--	--	--	--	--
MH013	8/19/2015			LPTP	No QC	LPTP	--	--	--	--	--	--
MH013	8/18/2015	9:30 AM	11:50 PM	Pace	Validated	60200905	--	--	--	--	--	--
MH013	8/18/2015	9:30 AM	11:50 PM	Pace	Validated	60200905	--	--	--	--	--	--
MH013	8/18/2015	9:30 AM	11:50 PM	Pace	Validated	60200931	ND	<10 ~~ND~~	ND	ND	ND	ND
LPTP Permeate	8/18/2015			LPTP	No QC	LPTP	--	--	--	--	--	--
MH013	8/18/2015			LPTP	No QC	LPTP	--	--	--	--	--	--

MSD 033542

Table 1
LPTP Discharge Samples
Bridgeton Landfill

						Parameter	4,4-DDD	4,4-DDE	4,4-DDT	a-BHC	Aldrin	Aroclor 1016
						Total or Dissolved	NA	NA	NA	NA	NA	NA
						Permit Limitation/Surcharge Threshold						
Location	Date	Start Composite	End Composite	Lab Name	Data Status	Lab Report	ug/l	ug/l	ug/l	ug/l	ug/l	ug/l
LPTP Permeate	9/06/2015			LPTP	No QC	LPTP	--	--	--	--	--	--
MH013	9/06/2015			LPTP	No QC	LPTP	--	--	--	--	--	--
LPTP Permeate	9/05/2015			LPTP	No QC	LPTP	--	--	--	--	--	--
MH013	9/05/2015			LPTP	No QC	LPTP	--	--	--	--	--	--
LPTP Permeate	9/04/2015			LPTP	No QC	LPTP	--	--	--	--	--	--
MH013	9/04/2015			LPTP	No QC	LPTP	--	--	--	--	--	--
LPTP Permeate	9/03/2015			LPTP	No QC	LPTP	--	--	--	--	--	--
MH013	9/03/2015			LPTP	No QC	LPTP	--	--	--	--	--	--
LPTP Permeate	9/02/2015			LPTP	No QC	LPTP	--	--	--	--	--	--
MH013	9/02/2015			LPTP	No QC	LPTP	--	--	--	--	--	--
LPTP Permeate	9/01/2015			LPTP	No QC	LPTP	--	--	--	--	--	--
MH013	9/01/2015			LPTP	No QC	LPTP	--	--	--	--	--	--
LPTP Permeate	8/31/2015			LPTP	No QC	LPTP	--	--	--	--	--	--
MH013	8/31/2015			LPTP	No QC	LPTP	--	--	--	--	--	--
LPTP Permeate	8/30/2015			LPTP	No QC	LPTP	--	--	--	--	--	--
MH013	8/30/2015			LPTP	No QC	LPTP	--	--	--	--	--	--
LPTP Permeate	8/29/2015			LPTP	No QC	LPTP	--	--	--	--	--	--
MH013	8/29/2015			LPTP	No QC	LPTP	--	--	--	--	--	--
LPTP Permeate	8/28/2015			LPTP	No QC	LPTP	--	--	--	--	--	--
MH013	8/28/2015			LPTP	No QC	LPTP	--	--	--	--	--	--
LPTP Permeate	8/27/2015			LPTP	No QC	LPTP	--	--	--	--	--	--
MH013	8/27/2015			LPTP	No QC	LPTP	--	--	--	--	--	--
LPTP Permeate	8/26/2015			LPTP	No QC	LPTP	--	--	--	--	--	--
MH013	8/26/2015			LPTP	No QC	LPTP	--	--	--	--	--	--
LPTP Permeate	8/24/2015			LPTP	No QC	LPTP	--	--	--	--	--	--
MH013	8/24/2015			LPTP	No QC	LPTP	--	--	--	--	--	--
LPTP Permeate	8/23/2015			LPTP	No QC	LPTP	--	--	--	--	--	--
MH013	8/23/2015			LPTP	No QC	LPTP	--	--	--	--	--	--
LPTP Permeate	8/22/2015			LPTP	No QC	LPTP	--	--	--	--	--	--
MH013	8/22/2015			LPTP	No QC	LPTP	--	--	--	--	--	--
LPTP Permeate	8/21/2015			LPTP	No QC	LPTP	--	--	--	--	--	--
MH013	8/21/2015			LPTP	No QC	LPTP	--	--	--	--	--	--
LPTP Permeate	8/20/2015			LPTP	No QC	LPTP	--	--	--	--	--	--
MH013	8/20/2015			LPTP	No QC	LPTP	--	--	--	--	--	--
LPTP Permeate	8/19/2015			LPTP	No QC	LPTP	--	--	--	--	--	--
MH013	8/19/2015			LPTP	No QC	LPTP	--	--	--	--	--	--
MH013	8/18/2015	9:30 AM	11:50 PM	Pace	Validated	60200905	--	--	--	--	--	--
MH013	8/18/2015	9:30 AM	11:50 PM	Pace	Validated	60200905	--	--	--	--	--	--
MH013	8/18/2015	9:30 AM	11:50 PM	Pace	Validated	60200931	--	--	--	--	--	--
LPTP Permeate	8/18/2015			LPTP	No QC	LPTP	--	--	--	--	--	--
MH013	8/18/2015			LPTP	No QC	LPTP	--	--	--	--	--	--

MSD 033543

Table 1
LPTP Discharge Samples
Bridgeton Landfill

						Parameter	Aroclor 1221	Aroclor 1232	Aroclor 1242	Aroclor 1248	Aroclor 1254	Aroclor 1260
						Total or Dissolved	NA	NA	NA	NA	NA	NA
						Permit Limit or Surcharge Threshold						
Location	Date	Start Composite	End Composite	Lab Name	Data Status	Lab Report	ug/l	ug/l	ug/l	ug/l	ug/l	ug/l
LPTP Permeate	9/06/2015			LPTP	No QC	LPTP	--	--	--	--	--	--
MH013	9/06/2015			LPTP	No QC	LPTP	--	--	--	--	--	--
LPTP Permeate	9/05/2015			LPTP	No QC	LPTP	--	--	--	--	--	--
MH013	9/05/2015			LPTP	No QC	LPTP	--	--	--	--	--	--
LPTP Permeate	9/04/2015			LPTP	No QC	LPTP	--	--	--	--	--	--
MH013	9/04/2015			LPTP	No QC	LPTP	--	--	--	--	--	--
LPTP Permeate	9/03/2015			LPTP	No QC	LPTP	--	--	--	--	--	--
MH013	9/03/2015			LPTP	No QC	LPTP	--	--	--	--	--	--
LPTP Permeate	9/02/2015			LPTP	No QC	LPTP	--	--	--	--	--	--
MH013	9/02/2015			LPTP	No QC	LPTP	--	--	--	--	--	--
LPTP Permeate	9/01/2015			LPTP	No QC	LPTP	--	--	--	--	--	--
MH013	9/01/2015			LPTP	No QC	LPTP	--	--	--	--	--	--
LPTP Permeate	8/31/2015			LPTP	No QC	LPTP	--	--	--	--	--	--
MH013	8/31/2015			LPTP	No QC	LPTP	--	--	--	--	--	--
LPTP Permeate	8/30/2015			LPTP	No QC	LPTP	--	--	--	--	--	--
MH013	8/30/2015			LPTP	No QC	LPTP	--	--	--	--	--	--
LPTP Permeate	8/29/2015			LPTP	No QC	LPTP	--	--	--	--	--	--
MH013	8/29/2015			LPTP	No QC	LPTP	--	--	--	--	--	--
LPTP Permeate	8/28/2015			LPTP	No QC	LPTP	--	--	--	--	--	--
MH013	8/28/2015			LPTP	No QC	LPTP	--	--	--	--	--	--
LPTP Permeate	8/27/2015			LPTP	No QC	LPTP	--	--	--	--	--	--
MH013	8/27/2015			LPTP	No QC	LPTP	--	--	--	--	--	--
LPTP Permeate	8/26/2015			LPTP	No QC	LPTP	--	--	--	--	--	--
MH013	8/26/2015			LPTP	No QC	LPTP	--	--	--	--	--	--
LPTP Permeate	8/24/2015			LPTP	No QC	LPTP	--	--	--	--	--	--
MH013	8/24/2015			LPTP	No QC	LPTP	--	--	--	--	--	--
LPTP Permeate	8/23/2015			LPTP	No QC	LPTP	--	--	--	--	--	--
MH013	8/23/2015			LPTP	No QC	LPTP	--	--	--	--	--	--
LPTP Permeate	8/22/2015			LPTP	No QC	LPTP	--	--	--	--	--	--
MH013	8/22/2015			LPTP	No QC	LPTP	--	--	--	--	--	--
LPTP Permeate	8/21/2015			LPTP	No QC	LPTP	--	--	--	--	--	--
MH013	8/21/2015			LPTP	No QC	LPTP	--	--	--	--	--	--
LPTP Permeate	8/20/2015			LPTP	No QC	LPTP	--	--	--	--	--	--
MH013	8/20/2015			LPTP	No QC	LPTP	--	--	--	--	--	--
LPTP Permeate	8/19/2015			LPTP	No QC	LPTP	--	--	--	--	--	--
MH013	8/19/2015			LPTP	No QC	LPTP	--	--	--	--	--	--
MH013	8/18/2015	9:30 AM	11:50 PM	Pace	Validated	60200905	--	--	--	--	--	--
MH013	8/18/2015	9:30 AM	11:50 PM	Pace	Validated	60200905	--	--	--	--	--	--
MH013	8/18/2015	9:30 AM	11:50 PM	Pace	Validated	60200931	--	--	--	--	--	--
LPTP Permeate	8/18/2015			LPTP	No QC	LPTP	--	--	--	--	--	--
MH013	8/18/2015			LPTP	No QC	LPTP	--	--	--	--	--	--

MSD 033544

Table 1
LPTP Discharge Samples
Bridgeton Landfill

						Parameter	b-BHC	Chlordane, alpha & gamma	d-BHC	Dieldrin	Endosulfan I	Endosulfan II
						Total or Dissolved	NA	NA	NA	NA	NA	NA
						Permit Limitation/Surcharge Threshold						
Location	Date	Start Composite	End Composite	Lab Name	Data Status	Lab Report	ug/l	ug/l	ug/l	ug/l	ug/l	ug/l
LPTP Permeate	9/06/2015			LPTP	No QC	LPTP	--	--	--	--	--	--
MH013	9/06/2015			LPTP	No QC	LPTP	--	--	--	--	--	--
LPTP Permeate	9/05/2015			LPTP	No QC	LPTP	--	--	--	--	--	--
MH013	9/05/2015			LPTP	No QC	LPTP	--	--	--	--	--	--
LPTP Permeate	9/04/2015			LPTP	No QC	LPTP	--	--	--	--	--	--
MH013	9/04/2015			LPTP	No QC	LPTP	--	--	--	--	--	--
LPTP Permeate	9/03/2015			LPTP	No QC	LPTP	--	--	--	--	--	--
MH013	9/03/2015			LPTP	No QC	LPTP	--	--	--	--	--	--
LPTP Permeate	9/02/2015			LPTP	No QC	LPTP	--	--	--	--	--	--
MH013	9/02/2015			LPTP	No QC	LPTP	--	--	--	--	--	--
LPTP Permeate	9/01/2015			LPTP	No QC	LPTP	--	--	--	--	--	--
MH013	9/01/2015			LPTP	No QC	LPTP	--	--	--	--	--	--
LPTP Permeate	8/31/2015			LPTP	No QC	LPTP	--	--	--	--	--	--
MH013	8/31/2015			LPTP	No QC	LPTP	--	--	--	--	--	--
LPTP Permeate	8/30/2015			LPTP	No QC	LPTP	--	--	--	--	--	--
MH013	8/30/2015			LPTP	No QC	LPTP	--	--	--	--	--	--
LPTP Permeate	8/29/2015			LPTP	No QC	LPTP	--	--	--	--	--	--
MH013	8/29/2015			LPTP	No QC	LPTP	--	--	--	--	--	--
LPTP Permeate	8/28/2015			LPTP	No QC	LPTP	--	--	--	--	--	--
MH013	8/28/2015			LPTP	No QC	LPTP	--	--	--	--	--	--
LPTP Permeate	8/27/2015			LPTP	No QC	LPTP	--	--	--	--	--	--
MH013	8/27/2015			LPTP	No QC	LPTP	--	--	--	--	--	--
LPTP Permeate	8/26/2015			LPTP	No QC	LPTP	--	--	--	--	--	--
MH013	8/26/2015			LPTP	No QC	LPTP	--	--	--	--	--	--
LPTP Permeate	8/24/2015			LPTP	No QC	LPTP	--	--	--	--	--	--
MH013	8/24/2015			LPTP	No QC	LPTP	--	--	--	--	--	--
LPTP Permeate	8/23/2015			LPTP	No QC	LPTP	--	--	--	--	--	--
MH013	8/23/2015			LPTP	No QC	LPTP	--	--	--	--	--	--
LPTP Permeate	8/22/2015			LPTP	No QC	LPTP	--	--	--	--	--	--
MH013	8/22/2015			LPTP	No QC	LPTP	--	--	--	--	--	--
LPTP Permeate	8/21/2015			LPTP	No QC	LPTP	--	--	--	--	--	--
MH013	8/21/2015			LPTP	No QC	LPTP	--	--	--	--	--	--
LPTP Permeate	8/20/2015			LPTP	No QC	LPTP	--	--	--	--	--	--
MH013	8/20/2015			LPTP	No QC	LPTP	--	--	--	--	--	--
LPTP Permeate	8/19/2015			LPTP	No QC	LPTP	--	--	--	--	--	--
MH013	8/19/2015			LPTP	No QC	LPTP	--	--	--	--	--	--
MH013	8/18/2015	9:30 AM	11:50 PM	Pace	Validated	60200905	--	--	--	--	--	--
MH013	8/18/2015	9:30 AM	11:50 PM	Pace	Validated	60200905	--	--	--	--	--	--
MH013	8/18/2015	9:30 AM	11:50 PM	Pace	Validated	60200931	--	--	--	--	--	--
LPTP Permeate	8/18/2015			LPTP	No QC	LPTP	--	--	--	--	--	--
MH013	8/18/2015			LPTP	No QC	LPTP	--	--	--	--	--	--

MSD 033545

Table 1
LPTP Discharge Samples
Bridgeton Landfill

						Parameter	Endosulfan Sulfate	Endrin	Endrin Aldehyde	g-BHC (Lindane)	Heptachlor	Heptachlor Epoxide
						Total or Dissolved	NA	NA	NA	NA	NA	NA
				Permit Limitation/Surcharge Threshold								
Location	Date	Start Composite	End Composite	Lab Name	Data Status	Lab Report	ug/l	ug/l	ug/l	ug/l	ug/l	ug/l
LPTP Permeate	9/06/2015			LPTP	No QC	LPTP	--	--	--	--	--	--
MH013	9/06/2015			LPTP	No QC	LPTP	--	--	--	--	--	--
LPTP Permeate	9/05/2015			LPTP	No QC	LPTP	--	--	--	--	--	--
MH013	9/05/2015			LPTP	No QC	LPTP	--	--	--	--	--	--
LPTP Permeate	9/04/2015			LPTP	No QC	LPTP	--	--	--	--	--	--
MH013	9/04/2015			LPTP	No QC	LPTP	--	--	--	--	--	--
LPTP Permeate	9/03/2015			LPTP	No QC	LPTP	--	--	--	--	--	--
MH013	9/03/2015			LPTP	No QC	LPTP	--	--	--	--	--	--
LPTP Permeate	9/02/2015			LPTP	No QC	LPTP	--	--	--	--	--	--
MH013	9/02/2015			LPTP	No QC	LPTP	--	--	--	--	--	--
LPTP Permeate	9/01/2015			LPTP	No QC	LPTP	--	--	--	--	--	--
MH013	9/01/2015			LPTP	No QC	LPTP	--	--	--	--	--	--
LPTP Permeate	8/31/2015			LPTP	No QC	LPTP	--	--	--	--	--	--
MH013	8/31/2015			LPTP	No QC	LPTP	--	--	--	--	--	--
LPTP Permeate	8/30/2015			LPTP	No QC	LPTP	--	--	--	--	--	--
MH013	8/30/2015			LPTP	No QC	LPTP	--	--	--	--	--	--
LPTP Permeate	8/29/2015			LPTP	No QC	LPTP	--	--	--	--	--	--
MH013	8/29/2015			LPTP	No QC	LPTP	--	--	--	--	--	--
LPTP Permeate	8/28/2015			LPTP	No QC	LPTP	--	--	--	--	--	--
MH013	8/28/2015			LPTP	No QC	LPTP	--	--	--	--	--	--
LPTP Permeate	8/27/2015			LPTP	No QC	LPTP	--	--	--	--	--	--
MH013	8/27/2015			LPTP	No QC	LPTP	--	--	--	--	--	--
LPTP Permeate	8/26/2015			LPTP	No QC	LPTP	--	--	--	--	--	--
MH013	8/26/2015			LPTP	No QC	LPTP	--	--	--	--	--	--
LPTP Permeate	8/24/2015			LPTP	No QC	LPTP	--	--	--	--	--	--
MH013	8/24/2015			LPTP	No QC	LPTP	--	--	--	--	--	--
LPTP Permeate	8/23/2015			LPTP	No QC	LPTP	--	--	--	--	--	--
MH013	8/23/2015			LPTP	No QC	LPTP	--	--	--	--	--	--
LPTP Permeate	8/22/2015			LPTP	No QC	LPTP	--	--	--	--	--	--
MH013	8/22/2015			LPTP	No QC	LPTP	--	--	--	--	--	--
LPTP Permeate	8/21/2015			LPTP	No QC	LPTP	--	--	--	--	--	--
MH013	8/21/2015			LPTP	No QC	LPTP	--	--	--	--	--	--
LPTP Permeate	8/20/2015			LPTP	No QC	LPTP	--	--	--	--	--	--
MH013	8/20/2015			LPTP	No QC	LPTP	--	--	--	--	--	--
LPTP Permeate	8/19/2015			LPTP	No QC	LPTP	--	--	--	--	--	--
MH013	8/19/2015			LPTP	No QC	LPTP	--	--	--	--	--	--
MH013	8/18/2015	9:30 AM	11:50 PM	Pace	Validated	60200905	--	--	--	--	--	--
MH013	8/18/2015	9:30 AM	11:50 PM	Pace	Validated	60200905	--	--	--	--	--	--
MH013	8/18/2015	9:30 AM	11:50 PM	Pace	Validated	60200931	--	--	--	--	--	--
LPTP Permeate	8/18/2015			LPTP	No QC	LPTP	--	--	--	--	--	--
MH013	8/18/2015			LPTP	No QC	LPTP	--	--	--	--	--	--

MSD 033546

Table 1
LPTP Discharge Samples
Bridgeton Landfill

							Parameter	Toxaphene
							Total or Dissolved	NA
						Permit Limit/Surcharge Threshold		
Location	Date	Start Composite	End Composite	Lab Name	Data Status	Lab Report		ug/l
LPTP Permeate	9/06/2015			LPTP	No QC	LPTP		--
MH013	9/06/2015			LPTP	No QC	LPTP		--
LPTP Permeate	9/05/2015			LPTP	No QC	LPTP		--
MH013	9/05/2015			LPTP	No QC	LPTP		--
LPTP Permeate	9/04/2015			LPTP	No QC	LPTP		--
MH013	9/04/2015			LPTP	No QC	LPTP		--
LPTP Permeate	9/03/2015			LPTP	No QC	LPTP		--
MH013	9/03/2015			LPTP	No QC	LPTP		--
LPTP Permeate	9/02/2015			LPTP	No QC	LPTP		--
MH013	9/02/2015			LPTP	No QC	LPTP		--
LPTP Permeate	9/01/2015			LPTP	No QC	LPTP		--
MH013	9/01/2015			LPTP	No QC	LPTP		--
LPTP Permeate	8/31/2015			LPTP	No QC	LPTP		--
MH013	8/31/2015			LPTP	No QC	LPTP		--
LPTP Permeate	8/30/2015			LPTP	No QC	LPTP		--
MH013	8/30/2015			LPTP	No QC	LPTP		--
LPTP Permeate	8/29/2015			LPTP	No QC	LPTP		--
MH013	8/29/2015			LPTP	No QC	LPTP		--
LPTP Permeate	8/28/2015			LPTP	No QC	LPTP		--
MH013	8/28/2015			LPTP	No QC	LPTP		--
LPTP Permeate	8/27/2015			LPTP	No QC	LPTP		--
MH013	8/27/2015			LPTP	No QC	LPTP		--
LPTP Permeate	8/26/2015			LPTP	No QC	LPTP		--
MH013	8/26/2015			LPTP	No QC	LPTP		--
LPTP Permeate	8/24/2015			LPTP	No QC	LPTP		--
MH013	8/24/2015			LPTP	No QC	LPTP		--
LPTP Permeate	8/23/2015			LPTP	No QC	LPTP		--
MH013	8/23/2015			LPTP	No QC	LPTP		--
LPTP Permeate	8/22/2015			LPTP	No QC	LPTP		--
MH013	8/22/2015			LPTP	No QC	LPTP		--
LPTP Permeate	8/21/2015			LPTP	No QC	LPTP		--
MH013	8/21/2015			LPTP	No QC	LPTP		--
LPTP Permeate	8/20/2015			LPTP	No QC	LPTP		--
MH013	8/20/2015			LPTP	No QC	LPTP		--
LPTP Permeate	8/19/2015			LPTP	No QC	LPTP		--
MH013	8/19/2015			LPTP	No QC	LPTP		--
MH013	8/18/2015	9:30 AM	11:50 PM	Pace	Validated	60200905		--
MH013	8/18/2015	9:30 AM	11:50 PM	Pace	Validated	60200905		--
MH013	8/18/2015	9:30 AM	11:50 PM	Pace	Validated	60200931		--
LPTP Permeate	8/18/2015			LPTP	No QC	LPTP		--
MH013	8/18/2015			LPTP	No QC	LPTP		--

MSD 033547

DM

Doug Mendoza Bridgeton Landfill

From: LaFata, Natalie <nlafata@cecinc.com>
Sent: Tuesday, September 08, 2015 9:20 AM
To: Rob G Daly; Mark Bright; Mike Waxman; Doug Mendoza; Jeff Jones; Kevin George
Cc: O'Leary, Kevin; Graves, Stephen; Kamp, Kevin; Kohrt, Mark
Subject: Plant Update 9-4-2015

The discharge amounts since the last Force Main/Plant Update are:

Date	**Direct Discharge** (gallons)
8/28/2015	234,928
8/29/2015	232,399
8/30/2015	162,466
8/31/2015	269,376
9/01/2015	255,323
9/02/2015	120,475
9/03/2015	247,287

- When odors were checked at the force main, no odors were detected and H2S readings were 0.0-0.5ppm at the pump stations.
- Sodium Nitrate dosing is at 600gpd and Ferric Chloride is being introduced to the discharge manhole 013 at 0.6-1.5gph at this time.

Any questions, please feel free to contact me!

Natalie L. La Fata / Plant Manager
Civil & Environmental Consultants, Inc.
4848 Park 370 Blvd., Suite F · Hazelwood, MO 63042
Toll Free: (866) 250-3679 ext. 3626 · Fax: (314) 656-4595
Mobile: (314) 341-3375 · http://www.cecinc.com
Senior Leadership · Integrated Services · Personal Business Relationships

This electronic communication and any attachments are intended solely for the use of the person or entity to which it is addressed, and may contain information that is confidential, privileged and exempt from disclosure under applicable law, including copyright law. If you are not the intended recipient of this message, you are prohibited from disclosing, reproducing, distributing, disseminating or otherwise using this transmission. Please promptly notify the sender by reply electronic communication and immediately delete this message from your system.

Doug Mendoza

Bridgeton Landfill

From: Ed Galbraith <EGalbraith@barr.com>
Sent: Tuesday, September 08, 2015 8:05 AM
To: Doug Mendoza
Cc: Kelly Caddy; Bouchard, Derek (DBouchard@republicservices.com)
Subject: Early notification of BLF lab reports

Doug,
Per special condition B.2 of the Bridgeton Landfill's permit, analytical reports must be submitted within 21 days of sampling. This is to notify you that two lab reports from Pace were posted to the Barr ftp site today. The sample date for both is 8/18/2015. A spreadsheet containing the data will be posted tomorrow along with the remainder of the weekly report.

The FTP site can be accessed as follows:

Copy this link and paste it into Windows Explorer (NOT Internet Explorer) ftp://ftp.barr.com/bridgetonlandfill/2015%20Reports/
User: blfdata;
Password: tran$fer!

Christopher J. Bulmahn

From: Bouchard, Derek <DBouchard@republicservices.com>
Sent: Thursday, September 03, 2015 11:38 AM
To: Christopher J. Bulmahn
Subject: Bridgeton Landfill LLC 2015 Outfall Report - August
Attachments: Bridgeton Landfill LLC 2015 Outfall report - August.pdf

1003803000

Attached, let me know if there are any questions.

Thank you,

REPUBLIC SERVICES

We'll handle it from here.™

Derek Bouchard Environmental Specialist
Bridgeton Landfill, LLC
13570 St. Charles Rock Road
e dbouchard@republicservices.com
o 3146562114 c 3143023634
w republicservices.com

2015

Bridgeton Landfill LLC
Monthly Leachate Outfall Report

9/3/2015 Filed in 15.4

CB 9-04

Month	Net Meter Reading	Precipitation Inches	Date of Reading	Gallons	Average Daily Discharge (Gal)	Equivalent Cubic Feet	Equivalent 100 Cubic Feet
January	10,463,750	1.67	2/1/2015	702,337	22,656	93,895.32	938.95
February	11,485,331	1.74	3/1/2015	1,021,581	36,485	136,575.00	1,365.75
March	13,523,218	3	4/1/2015	2,037,887	65,738	272,444.79	2,724.45
April	16,449,016	5.42	5/1/2015	2,925,798	94,381	391,149.47	3,911.49
May	22,998,229	3.62	6/1/2015	6,549,213	211,265	875,563.18	8,755.63
June	29,103,253	13.14	6/30/2015	6,105,025	203,501	816,179.77	8,161.80
July	36,960,514	4.13	7/31/2015	7,857,261	261,909	1,050,435.95	10,504.36
August	43,737,113	6.67	9/1/2015	6,776,599	225,887	905,962.43	9,059.62
September							
October							
November							
December							

Note:

RECEIVED

SEP 03 2015

DIVISION OF
ENVIRONMENTAL COMPLIANCE

DM

Doug Mendoza

From: Doug Mendoza
Sent: Wednesday, September 02, 2015 11:19 AM
To: 'Ed Galbraith'; John Lodderhose; Brian G. Gibson; Michael Grace; Nora C. Estopare; Rob G Daly; 'Tippett Mosby, Leanne (Leanne.TippettMosby@dnr.mo.gov)'; 'Aaron Schmidt'; 'Nagel, Chris (Christopher.Nagel@dnr.mo.gov)'; 'bpower@republicservices.com'; 'Getting, James'; 'Bouchard, Derek (DBouchard@republicservices.com)'; 'Kamp, Kevin'; 'LaFata, Natalie'; 'Cooper, Ivan (icooper@cecinc.com)'; 'lwright@cecinc.com'; Kelly Caddy; Dana B. Pasi; Christopher J. Bulmahn; Ken Gambaro; Mike Townley; 'lwright@cecinc.com'; Andrea A. Nord; Becca Coyle; 'koleary@cecinc.com'; 'sgraves@cecinc.com'; 'awyatt@herstassociates.com'
Subject: RE: Bridgeton Landfill Weekly Report

Ed,

I will use the estimated 262 mg/L BOD for the T1-132 batch, and will use the 210 mg/L value for the T1-133 batch.

Doug

From: Ed Galbraith [mailto:EGalbraith@barr.com]
Sent: Wednesday, September 02, 2015 10:41 AM
To: Doug Mendoza; John Lodderhose; Brian G. Gibson; Michael Grace; Nora C. Estopare; Rob G Daly; 'Tippett Mosby, Leanne (Leanne.TippettMosby@dnr.mo.gov)'; 'Aaron Schmidt'; 'Nagel, Chris (Christopher.Nagel@dnr.mo.gov)'; 'bpower@republicservices.com'; 'Getting, James'; 'Bouchard, Derek (DBouchard@republicservices.com)'; 'Kamp, Kevin'; 'LaFata, Natalie'; 'Cooper, Ivan (icooper@cecinc.com)'; 'lwright@cecinc.com'; Kelly Caddy; Dana B. Pasi; Christopher J. Bulmahn; Ken Gambaro; Mike Townley; 'lwright@cecinc.com'; Andrea A. Nord; Becca Coyle; 'koleary@cecinc.com'; 'sgraves@cecinc.com'; 'awyatt@herstassociates.com'
Subject: Bridgeton Landfill Weekly Report

The material for last week is posted to Barr's ftp site.

- The BOD for sample T1-131-AS, 08/17/2015 , is reported as <300 mg/L. BOD was set using a wider dilution range to be able to report a value, however the BOD value was lower than expected. In addition, the Primary QC GGA failed low and the result is considered estimated with a low bias (*). The COD result is 3900 mg/l. The average of the BOD:COD ratios for the 2 samples immediately before and after this one is 0.0672. 3900 mg/l COD x 0.0672 yields a BOD estimate of 262 mg/l.
- The BOD for sample T1-132-AS, 8/20/2015 is Non Detect at <300 mg/L
- The BOD for sample T1-133-AS, 08/24/2015, is reported as 210 mg/L; it is an estimated result because the blank spike (LCS) failed low and therefore is considered estimated with a low bias (*). The COD result is 3900 mg/l. Once we have additional data, we can calculate an estimated value.

The FTP site can be accessed as follows:

Copy this link and paste it into Windows Explorer (NOT Internet Explorer) ftp://ftp.barr.com/bridgetonlandfill/2015%20Reports/
User: blfdata;
Password: tran$fer!

Ed Galbraith

Doug Mendoza

From: Ed Galbraith <EGalbraith@barr.com>
Sent: Wednesday, September 02, 2015 10:41 AM
To: Doug Mendoza; John Lodderhose; Brian G. Gibson; Michael Grace; Nora C. Estopare; Rob G Daly; 'Tippett Mosby, Leanne (Leanne.TippettMosby@dnr.mo.gov)'; 'Aaron Schmidt'; 'Nagel, Chris (Christopher.Nagel@dnr.mo.gov)'; 'bpower@republicservices.com'; 'Getting, James'; 'Bouchard, Derek (DBouchard@republicservices.com)'; 'Kamp, Kevin'; 'LaFata, Natalie'; 'Cooper, Ivan (icooper@cecinc.com)'; 'lwright@cecinc.com'; Kelly Caddy; Dana B. Pasi; Christopher J. Bulmahn; Ken Gambaro; Mike Townley; 'lwright@cecinc.com'; Andrea A. Nord; Becca Coyle; 'koleary@cecinc.com'; 'sgraves@cecinc.com'; 'awyatt@herstassociates.com'
Subject: Bridgeton Landfill Weekly Report

CB 9-18

The material for last week is posted to Barr's ftp site.

- The BOD for sample T1-131-AS, 08/17/2015 , is reported as <300 mg/L. BOD was set using a wider dilution range to be able to report a value, however the BOD value was lower than expected. In addition, the Primary QC GGA failed low and the result is considered estimated with a low bias (*). The COD result is 3900 mg/l. The average of the BOD:COD ratios for the 2 samples immediately before and after this one is 0.0672. 3900 mg/l COD x 0.0672 yields a BOD estimate of 262 mg/l.
- The BOD for sample T1-132-AS, 8/20/2015 is Non Detect at <300 mg/L
- The BOD for sample T1-133-AS, 08/24/2015, is reported as 210 mg/L; it is an estimated result because the blank spike (LCS) failed low and therefore is considered estimated with a low bias (*). The COD result is 3900 mg/l. Once we have additional data, we can calculate an estimated value.

The FTP site can be accessed as follows:

Copy this link and paste it into Windows Explorer (NOT Internet Explorer) ftp://ftp.barr.com/bridgetonlandfill/2015%20Reports/
User: blfdata;
Password: tran$fer!

Ed Galbraith

Senior Environmental Consultant
Jefferson City office: 573.638.5024
cell: 573.418.5562
egalbraith@barr.com
www.barr.com

resourceful. naturally. BARR

Hauled Waste Volume Summary				
Date	Batch I.D.	No. Of Trucks Hauled	Batch Volume (gal)	Daily Volume (gal)
8/27/2015	T1-134-AS	1	7,500	97,500
	HW	12	90,000	
8/26/2015	HW	14	105,000	187,500
	HW	11	82,500	
8/25/2015	HW	3	22,500	45,000
	T1-133-AS	3	22,500	

Table 1

					Parameter	Biochemical Oxygen Demand (5-day)	Chemical Oxygen Demand	Cyanide	Nitrogen, ammonia as N	Oil and Grease	pH
					Total or Dissolved	NA	NA	NA	NA	NA	NA
Location	Date	Sample Collection Time	Lab Name	Data Status	Lab Report	mg/l	mg/l	mg/l	mg/l	mg/l	pH units
T1-134-AS	8/27/2015		Field	No QC	WASTE_2015	--	1900	--	--	--	8.36
HW	8/26/2015		Field	No QC	WASTE_2015	--	2440	--	--	--	7.91
HW	8/25/2015		Field	No QC	WASTE_2015	--	2850	--	--	--	8.21
T1-133-AS	8/24/2015	6:15 AM	PDC	Validated	5083929	~~240~~ *	2300	--	--	--	--
T1-133-AS	8/24/2015		Field	No QC	WASTE_2015	--	1600	--	--	--	8.11
HW	8/22/2015		Field	No QC	WASTE_2015	--	2080	--	--	--	8.4
HW	8/21/2015		Field	No QC	WASTE_2015	--	1900	--	--	--	8.36
T1-132-AS	8/20/2015	6:15 AM	PDC	Validated	5083491	ND	3100	--	--	--	--
T1-132-AS	8/20/2015		Field	No QC	WASTE_2015	--	2250	--	--	--	8.23
HW	8/19/2015		Field	No QC	WASTE_2015	--	1670	--	--	--	8.25
HW	8/18/2015		Field	No QC	WASTE_2015	--	1560	--	--	--	8.34

→ 262 mg/L - see 9/2/15, 11:19am email

→ 370 mg/L - see 9/16/15, 8:00am email

MSD 033555

Table 1

Location	Date	Sample Collection Time	Lab Name	Data Status	Lab Report	Phenolics	Solids, total suspended	Temperature, °C	Total Toxic Organics	Ultraviolet absorbance at 254 nm	Antimony	Arsenic
					Parameter Total or Dissolved	NA	NA	NA	NA	NA	Total	Total
						mg/l	mg/l	deg C	ug/l	cm-1	mg/l	mg/l
T1-134-AS	8/27/2015		Field	No QC	WASTE_2015	--	**3400**	**37.5**	--	--	--	--
HW	8/26/2015		Field	No QC	WASTE_2015	--	**11760**	**32.9**	--	--	--	--
HW	8/25/2015		Field	No QC	WASTE_2015	--	**8820**	**36.7**	--	--	--	--
T1-133-AS	8/24/2015	6:15 AM	PDC	Validated	5083929	--	**3400**	--	--	--	--	--
T1-133-AS	8/24/2015		Field	No QC	WASTE_2015	--	**6620**	**38.6**	--	--	--	--
HW	8/22/2015		Field	No QC	WASTE_2015	--	**16460**	**38.5**	--	--	--	--
HW	8/21/2015		Field	No QC	WASTE_2015	--	**3400**	**38.1**	--	--	--	--
T1-132-AS	8/20/2015	6:15 AM	PDC	Validated	5083491	--	**4600**	--	--	--	--	--
T1-132-AS	8/20/2015		Field	No QC	WASTE_2015	--	**3060**	**36.5**	--	--	--	--
HW	8/19/2015		Field	No QC	WASTE_2015	--	**5020**	**37.4**	--	--	--	--
HW	8/18/2015		Field	No QC	WASTE_2015	--	**8980**	**36.3**	--	--	--	--

MSD 033556

Doug Mendoza

Bridgeton Landfill

From: Ed Galbraith <EGalbraith@barr.com>
Sent: Wednesday, September 02, 2015 9:52 AM
To: John Lodderhose; Rob G Daly
Cc: Doug Mendoza; Mark Bright; Michael Grace; 'Kamp, Kevin'; 'bpower@republicservices.com'; 'Bouchard, Derek (DBouchard@republicservices.com)'; 'Koziatek, Dan'; Ethan R. Voyles; William C. Selby; 'LaFata, Natalie'
Subject: RE: Bridgeton PS - 1- Revised Sampling Plan

All, we have the required sampling materials now and will plan to be on site tomorrow, 9/3/2015 at around 8:00 am.

Ed Galbraith

Senior Environmental Consultant
Jefferson City office: 573.638.5024
cell: 573.418.5562
egalbraith@barr.com
www.barr.com

resourceful. naturally. BARR

From: Ed Galbraith
Sent: Tuesday, September 01, 2015 3:16 PM
To: 'John Lodderhose'; 'Rob G Daly'
Cc: 'Doug Mendoza'; 'Mark Bright'; 'Michael Grace'; 'Kamp, Kevin'; 'bpower@republicservices.com'; 'Bouchard, Derek (DBouchard@republicservices.com)'; 'Koziatek, Dan'; Ethan R. Voyles; William C. Selby
Subject: RE: Bridgeton PS - 1- Revised Sampling Plan

All,

The sampling equipment sent from our lab did not include the ammonia SiGel tubes. We did not discover the omission until today. Therefore the sampling scheduled for tomorrow will need to be postponed. I will notify the lab and let you all of know the new date. I apologize for any inconvenience.

Ed Galbraith

Senior Environmental Consultant
Jefferson City office: 573.638.5024
cell: 573.418.5562
egalbraith@barr.com
www.barr.com

resourceful. naturally. BARR

TO: **File**

FROM: **Angie McDonough** amm

DATE: **September 1, 2015**

SUBJECT: **BRIDGETON LANDFILL LLC**
WASTEWATER USER CHARGE BILLING
ACCOUNT NUMBER 0039145-8

Pursuant to the MSD Industrial Wastewater Discharge Permit for the above referenced facility, please bill this facility for the following charges for the indicated billing period:

VOLUME
Hauled Waste Discharge

5,445,000 gallons X $0.020/Gal = $109,938.71

Department of Environmental Compliance (REG) labor fee is $1,258.42 for 29.5 extra hours.
Use Revenue Code "INFO" and utility type Q.
Budget code is 1101-08050-51011 so revenue will be credited back to Department of Environmental Compliance budget.

Department of Environmental Compliance (OT) labor fee is $4,955.12 for 78.2 extra hours.
Use Revenue Code "INFO" and utility type Q.
Budget code is 1101-08050-51020 so revenue will be credited back to Department of Environmental Compliance budget.

Total Bill = $116,152.25

The volume was obtained from the customer's on-site discharge self-monitoring report and hauled waste total truck capacities.

SOURCE OF WASTE: SP014 Commingled landfill leachate and landfill gas collection system condensate

BILLING PERIOD: July 2015

Other applicable wastewater user charges, as per Ordinance 13758, should be included in this bill. Please call me at 314-436-8762 if you have any questions.

bv

ec: Doug Mendoza
Brian Gibson
Bridgeton Republic Services
Becca Coyle
Keidra King

FILE: IU, Bridgeton Landfill LLC, 1003-8030-00

Doug Mendoza Bridgeton Landfill

From: Ed Galbraith <EGalbraith@barr.com>
Sent: Tuesday, September 01, 2015 3:16 PM
To: John Lodderhose; Rob G Daly
Cc: Doug Mendoza; Mark Bright; Michael Grace; 'Kamp, Kevin'; 'bpower@republicservices.com'; 'Bouchard, Derek (DBouchard@republicservices.com)'; 'Koziatek, Dan'; Ethan R. Voyles; William C. Selby
Subject: RE: Bridgeton PS - 1- Revised Sampling Plan

All,

The sampling equipment sent from our lab did not include the ammonia SiGel tubes. We did not discover the omission until today. Therefore the sampling scheduled for tomorrow will need to be postponed. I will notify the lab and let you all of know the new date. I apologize for any inconvenience.

Ed Galbraith

Senior Environmental Consultant
Jefferson City office: 573.638.5024
cell: 573.418.5562
egalbraith@barr.com
www.barr.com

resourceful. naturally. BARR

From: Ed Galbraith
Sent: Sunday, August 30, 2015 9:15 PM
To: 'John Lodderhose'; Rob G Daly
Cc: Doug Mendoza; Mark Bright; Michael Grace; Kamp, Kevin; bpower@republicservices.com; Bouchard, Derek (DBouchard@republicservices.com); Koziatek, Dan
Subject: Bridgeton PS - 1- Revised Sampling Plan

John and Rob,

Please see the revised sampling plan incorporating the changes as described by Rob. We intend to conduct the next canister sampling event this Wednesday 09/02/2015.

Thanks.

Ed Galbraith

Senior Environmental Consultant
Jefferson City office: 573.638.5024
cell: 573.418.5562
egalbraith@barr.com
www.barr.com