Sewer Acct.#: **1011728100**

Company: **SPECGX LLC**

Address: **3600 N 2nd St**

City: **St. Louis**

State and Zip: **MO 63147**

Industry ID	File Code	File Description
35331	31	INDUSTRY OVERFLOW

Sewer Acct. #: 2112059600

Company: **MALLINCKRODT INC**

Address: 3600 N 2nd St

City: St. Louis

State and Zip: MO , 63147

Ind_id	File Code	File Description
35350	350	ARCHIVED INDUSTRY INSOMEP OVERFLOW

ACCOUNT NUMBER: **21120596-00**

COMPANY NAME: **MALLINCKRODT INC**

MAPS

FROM 12-13-07 THRU 01-28-10

CORRESPONDENCE

From: 07-06-09

FROM 11-01-10 THRU 04-28-11

X CORRESPONDENCE LOCATED IN OVERFLOW FILE

04-12-12 Moved to ARCHIV

MSD-DEC INDUSTRY SAMPLING MAP

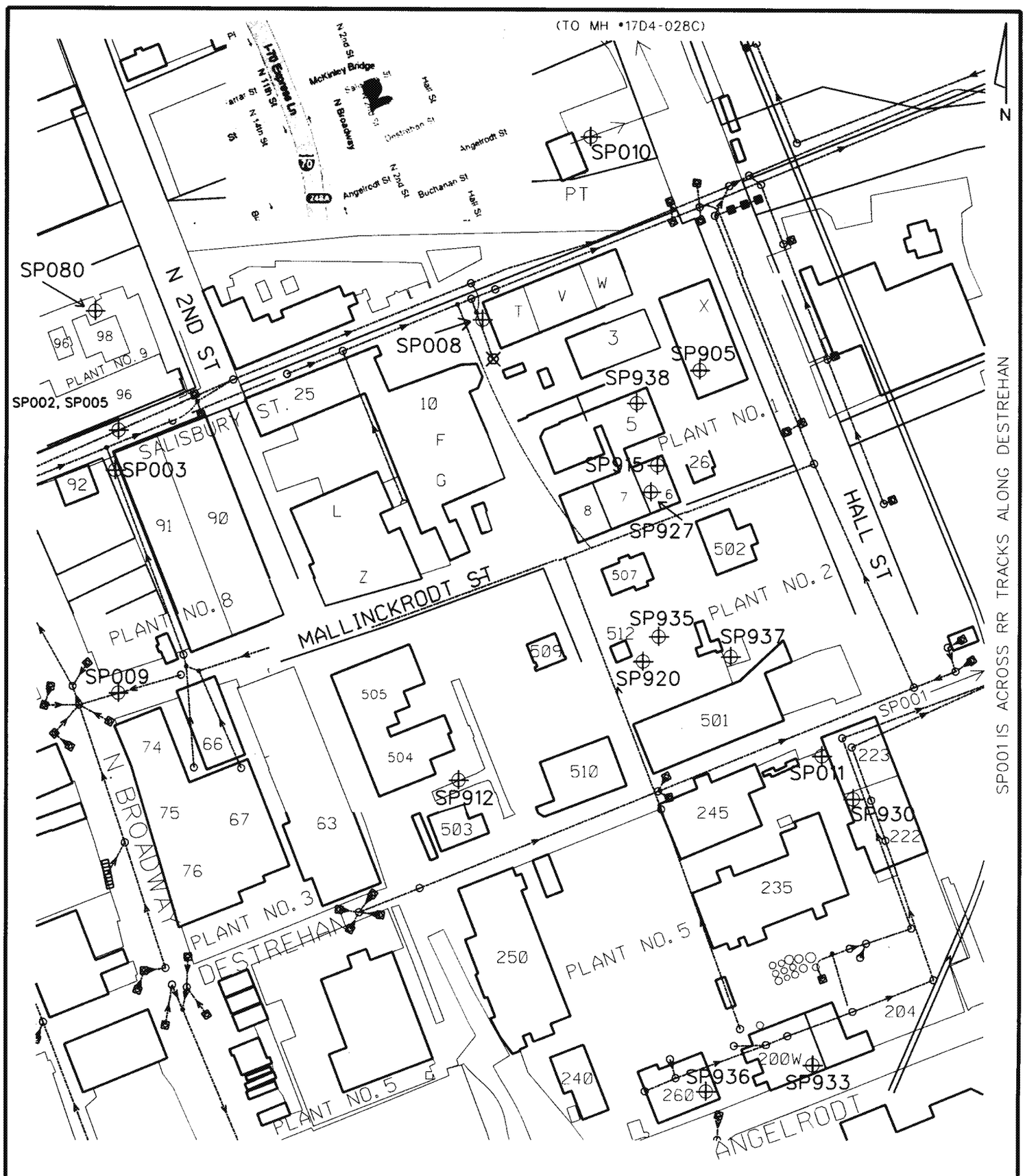

Company Name: MALLINCKRODT, INC.

MSD Account No.: 21120596-00

Premise Address: 3600 N. 2ND ST.

Zip: 63147

Date: 1/28/10

MSD-DEC INDUSTRY SAMPLING MAP

SP001: MH (Gatewell) at foot of Destrahan 100' E of RR

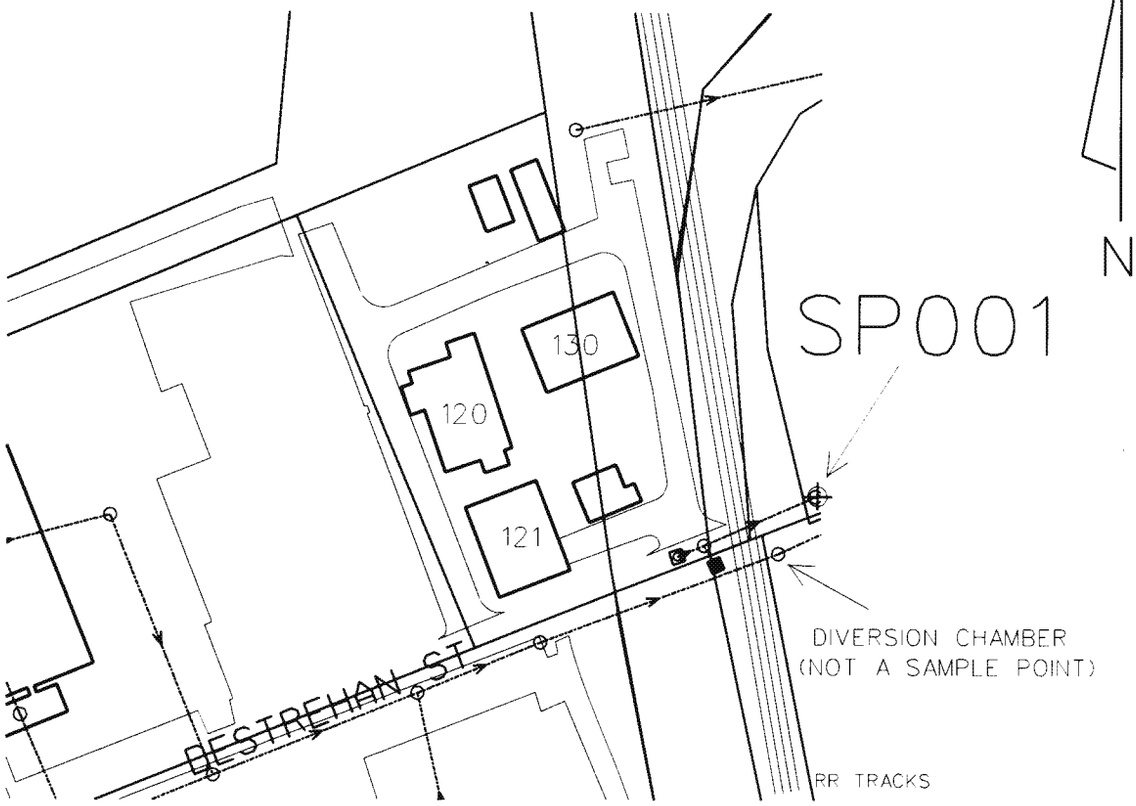

SP'S 005 & 002

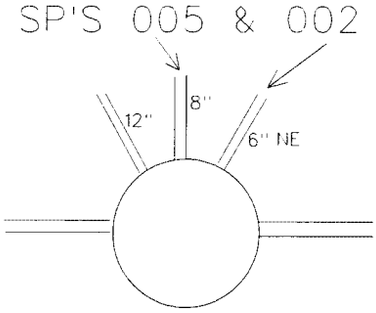

DETAIL MH OF SP002 & SP005

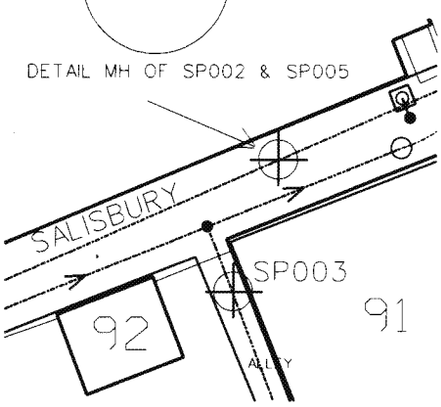

SP002: MH 5' S of bldg #96, 30' E of SP 003, (6" pipe from NE, 3' down)
SP003: MH in alley at Salisbury, 12' W, 3' S of NW corner of building 91
SP005: MH 5' S of building #96, 30' E of SP 003 (Center pipe, 8" dia., 3' down)

SAMPLE IN HOLE IN METAL PLATE UNDER METAL GRATE

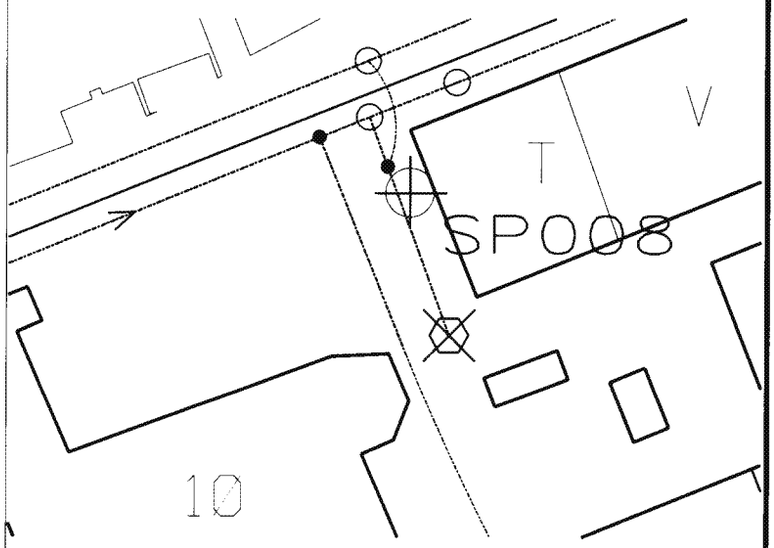

SP008: Overflow chamber on N side of pump station on W side of building T

Company Name: MALLINCKRODT, INC.

MSD Account No.: 21120596-00

Premise Address: 3600 N. 2ND. ST.

Zip:63147

Date:1/28/10

MSD-DEC INDUSTRY SAMPLING MAP

SP009: MH in Mallinckrodt St 27' E of Broadway, 4' from S curb

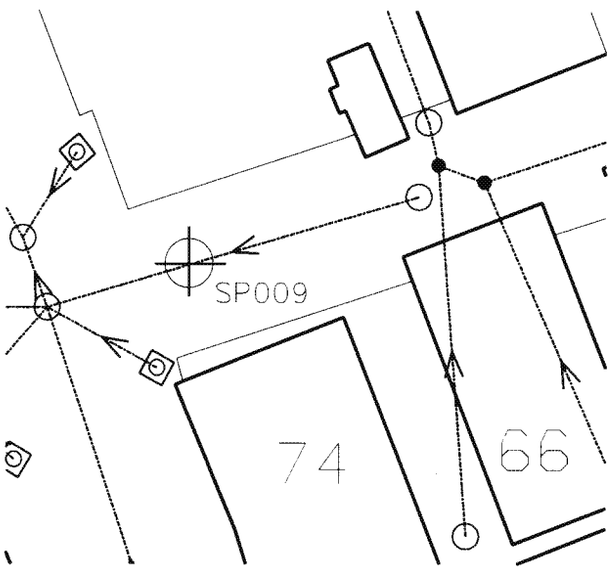

SP010 MH DETAIL

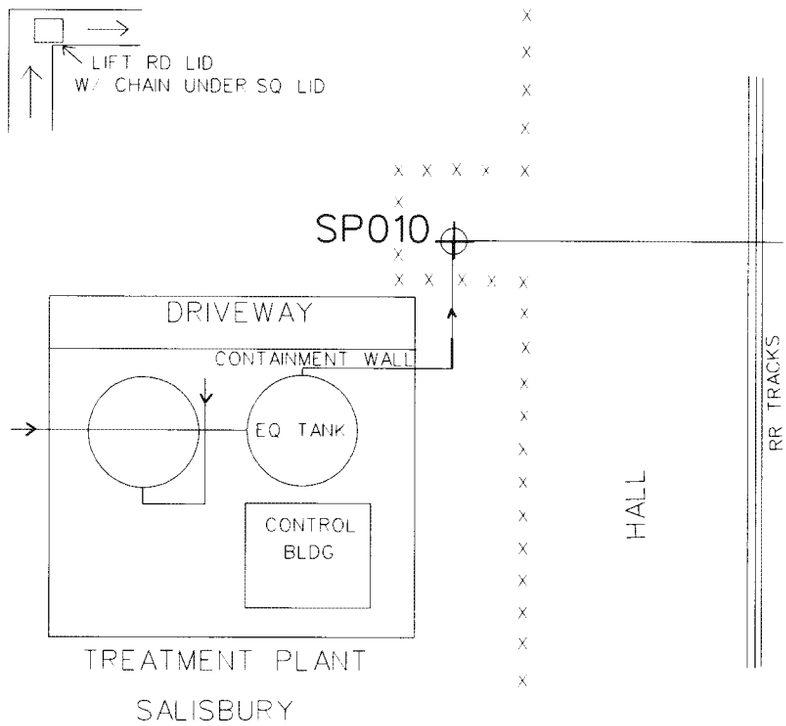

SP010: MH w/square lid 50' N of neutralization control building at Hall & Salisbury

SP080 DETAIL

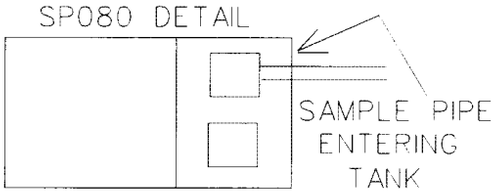

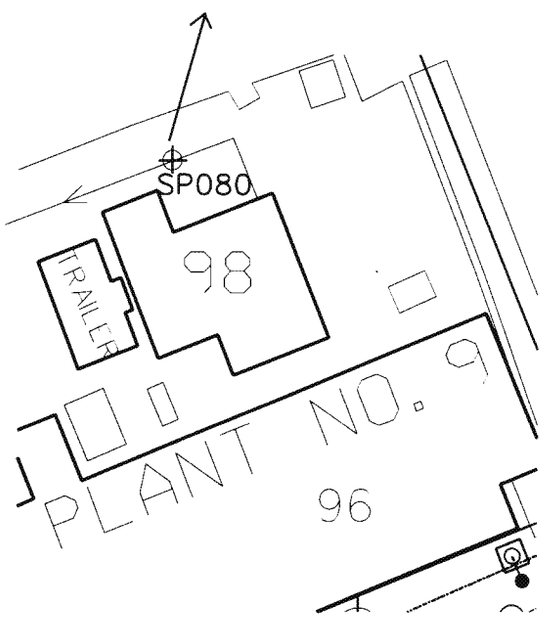

SP080: Inlet to sump (double MH) N of building #98

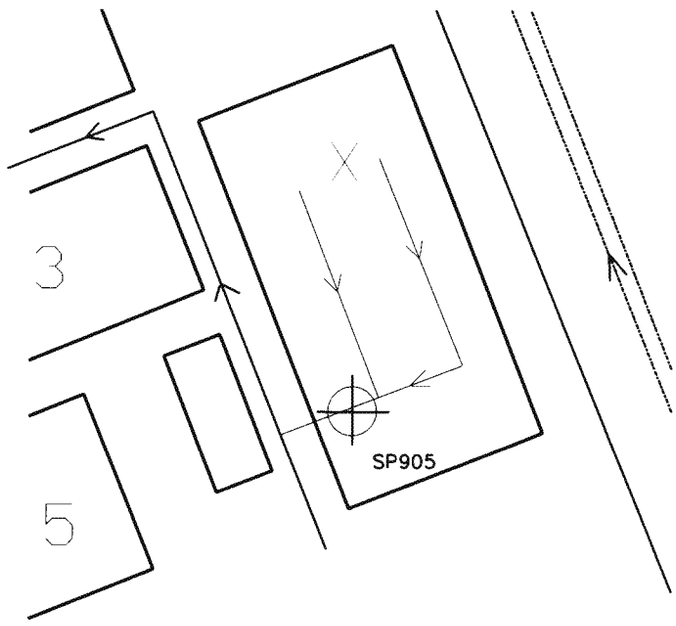

SP905: MH inside building X, 12' W, 5' S of W door (Total flow out)

Company Name: MALLINCKRODT, INC.

MSD Account No.: 21120596-00

Premise Address: 3600 N. 2ND ST.

Zip: 63147

Date: 1/28/10

MSD-DEC INDUSTRY SAMPLING MAP

SP912: Valve on discharge line from outdoor Tank #450 on SE corner of Building 504

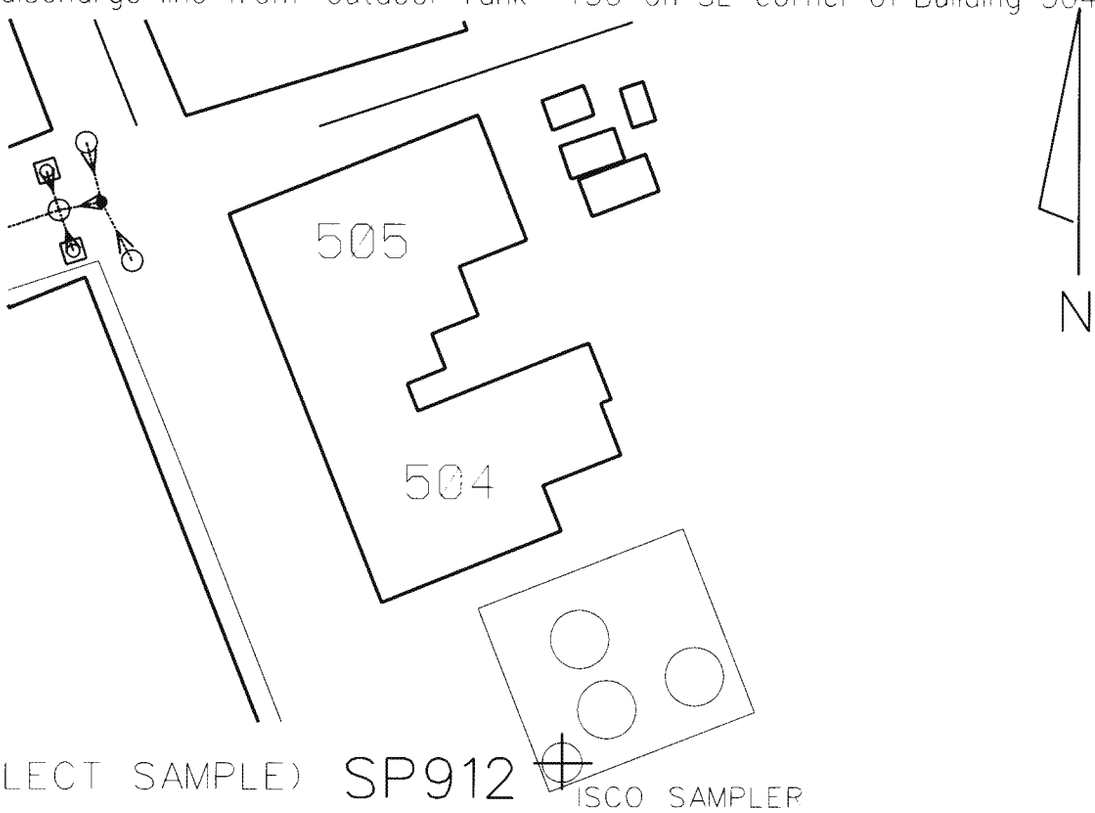

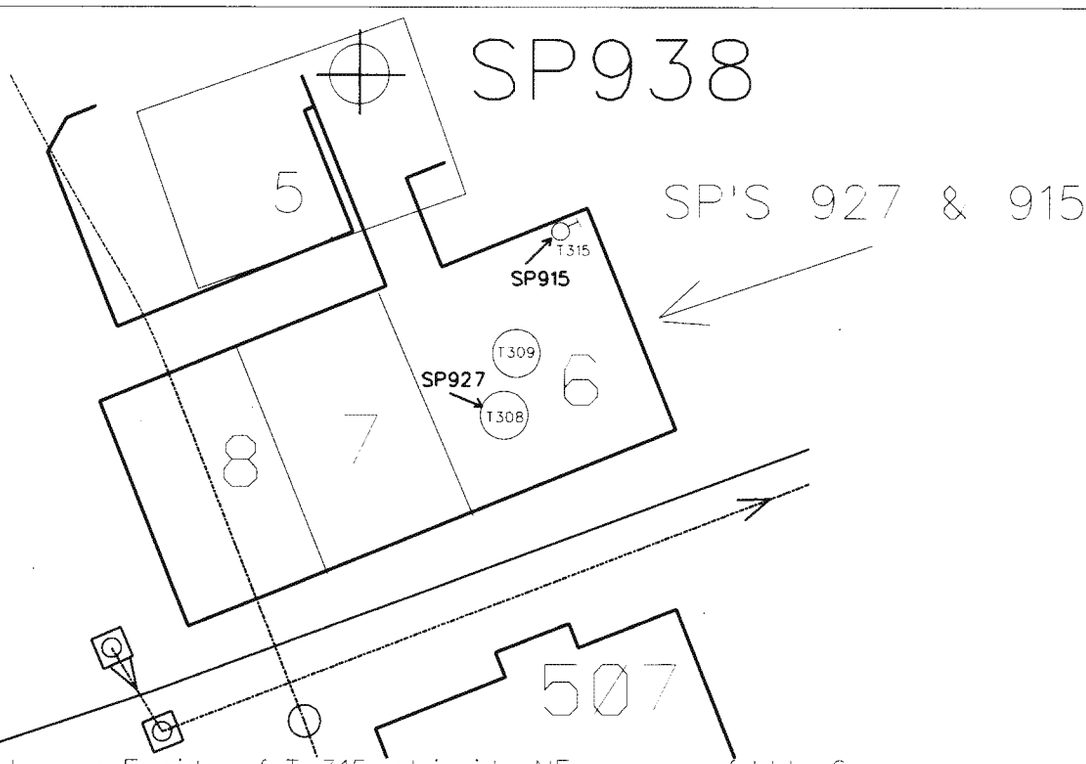

SP915: Valve on E side of T-315 at inside NE corner of bldg 6
SP927: Tank 308 (acid press tank) in bldg 6
SP938: 6" floor drain in far SW corner of room in Building 5, Room 406

Company Name: MALLINCKRODT, INC. MSD Account No.: 21120596-00

Premise Address: 3600 N. 2ND ST. Date: 1/28/10 Zip: 63147

MSD-DEC INDUSTRY SAMPLING MAP

SP920: Valve on discharge line, outside SW corner of diked area E of bldg 512
SP935: ½" steel pipe on inside of concrete wall S of North stairs - Bldg 512
SP937: Valve on 2nd level on W side near pipe bridge N of bldg 501

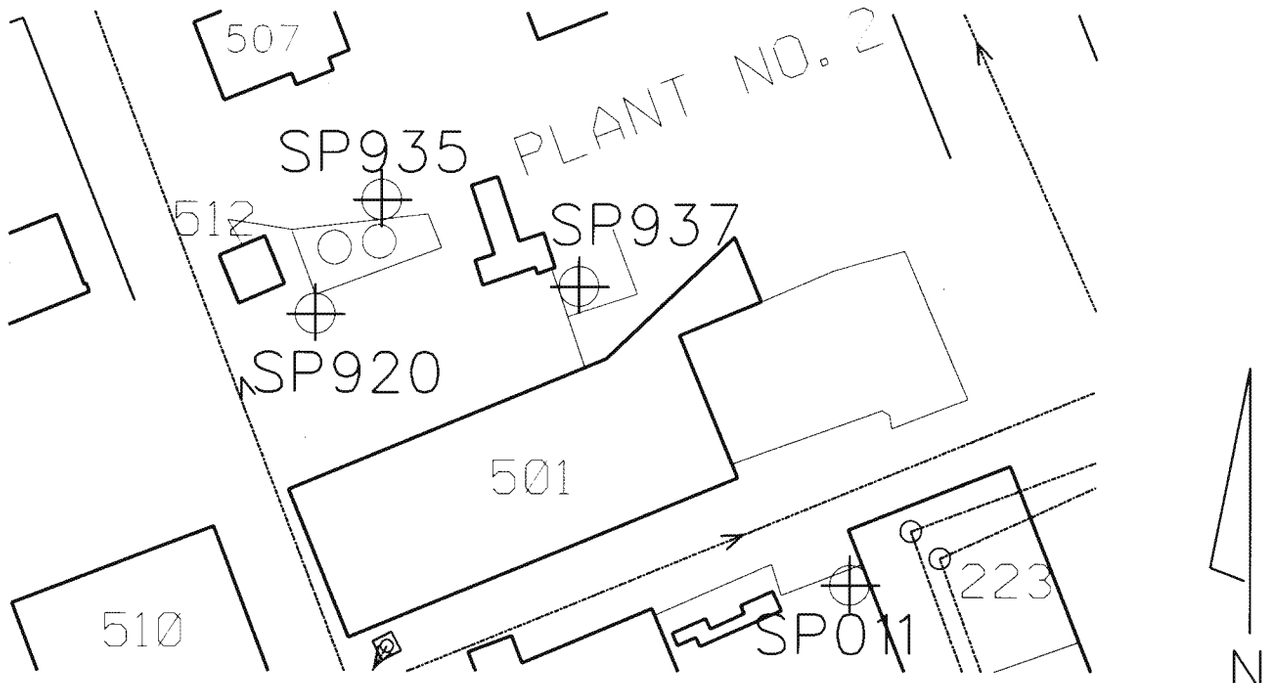

SP011: MH with square lid 18' S from NW corner of bldg 223 under iron ladder

* SP011 IS UPSTREAM OVERFLOW PT. CHECK W/ CONTACT TO SEE IF OVERFLOW IS OCCURRING

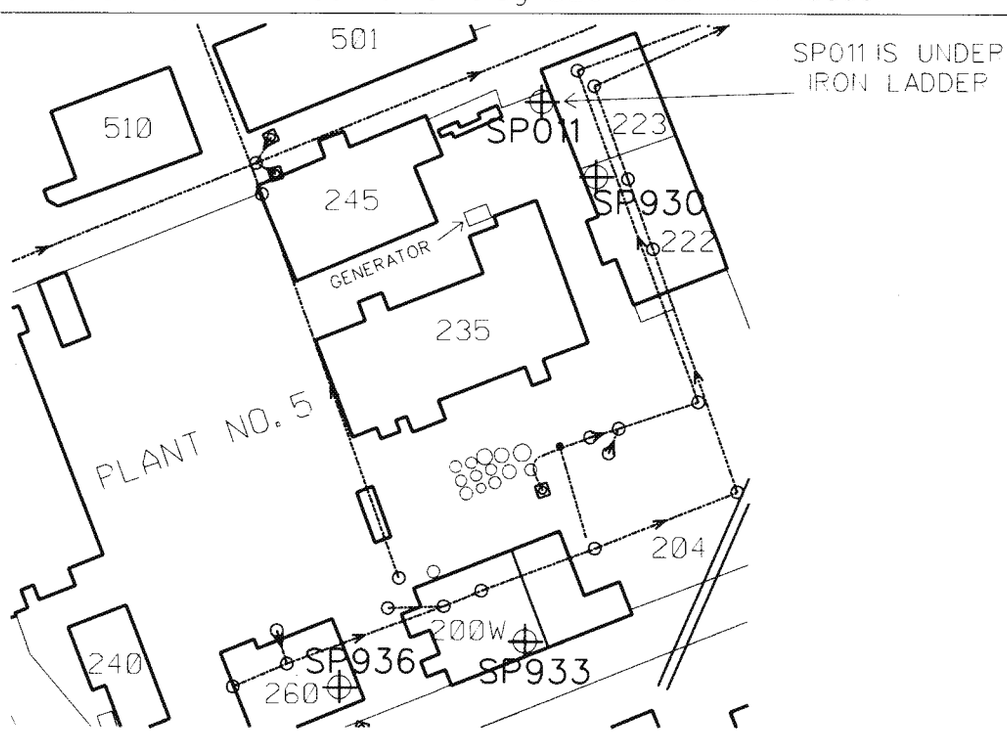

SP930: Valve on 4" PVC line inside NW corner of Bldg. 222S, only when sump is discharging from tanks 300 and 355
SP933: Valve on Tank #1 10' NW of SE corner of Bldg. 200W - only when disch. 439 waste
SP936: Valve on ½" line 1' from hydrogenerator bldg 8' from S wall in SE corner of bldg 260

Company Name: MALLINCKRODT, INC. MSD Account No.: 21120596-00

Premise Address: 3600 N. 2ND ST. Date: 1/28/10 Zip: 63147

MSD-DEC INDUSTRY SAMPLING MAP

MSD

SP001: MH (Gatewell) at foot of Destrahan 100' E of RR

SP'S 005 & 002

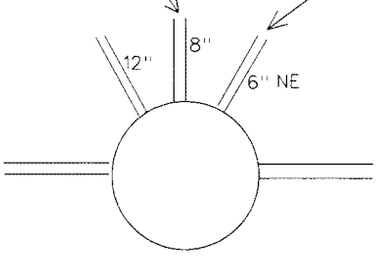

DETAIL MH OF SP002 & SP005

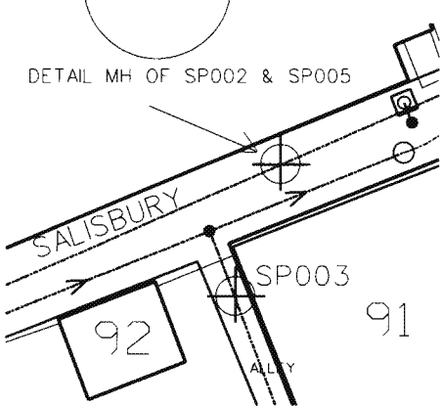

SP002: MH 5' S of bldg #96, 30' E of SP 003, (6" pipe from NE, 3' down)

SP003: MH in alley at Salisbury, 12' W, 3' S of NW corner of building 91

SP005: MH 5' S of building #96, 30' E of SP 003 (Center pipe, 8" dia., 3' down)

SAMPLE IN HOLE IN METAL PLATE UNDER METAL GRATE

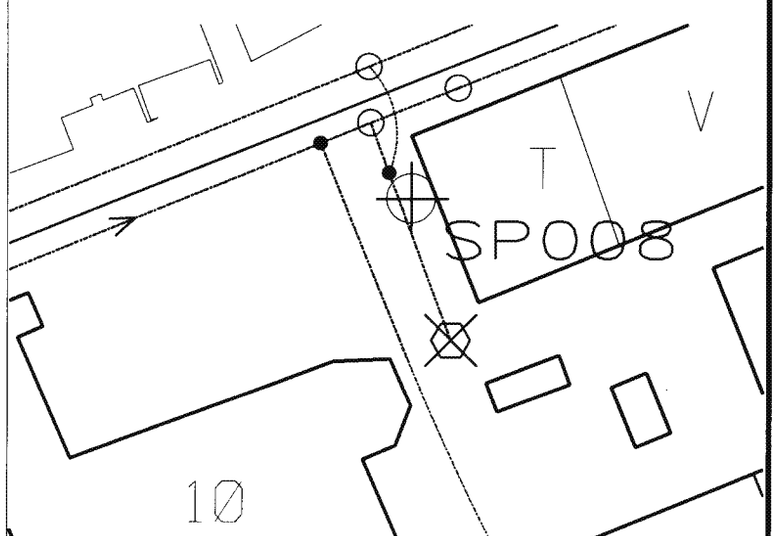

SP008: Oveflow chamber on N side of pump station on W side of building T

Company Name: MALLINCKRODT, INC.

MSD Account No.: 21120596-00

Premise Address: 3600 N. 2ND. ST.

Zip:63147

Date:2/12/09

MSD-DEC INDUSTRY SAMPLING MAP

MSD

SP009: MH in Mallinckrodt St 27' E of Broadway, 4' from S curb

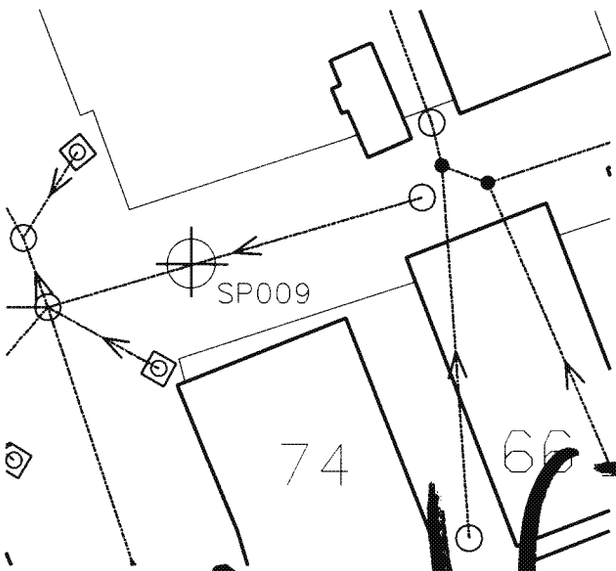

SP010 MH DETAIL

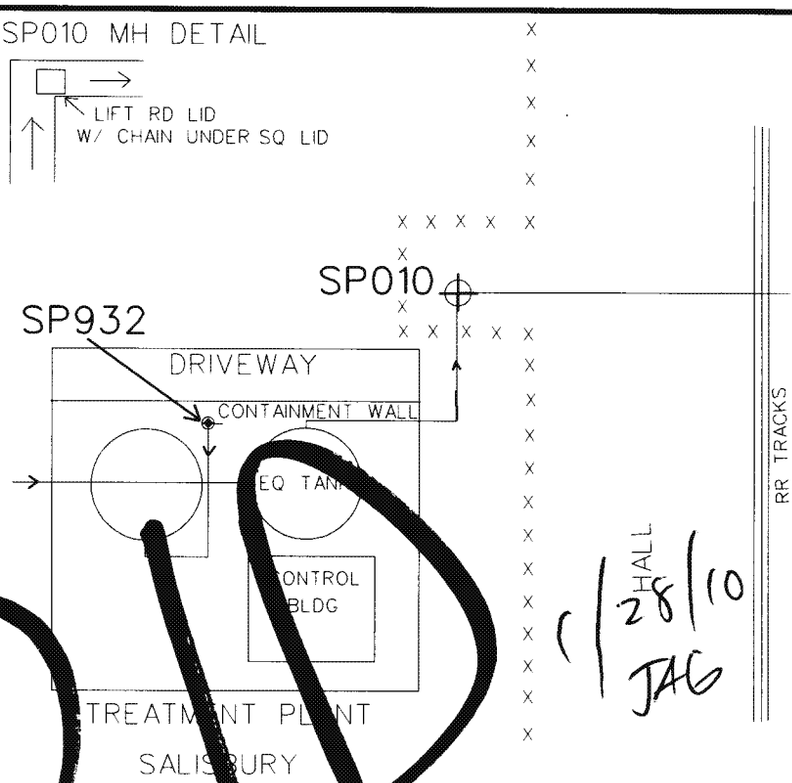

SP010: MH w/square lid, 50' N of neutralization control building at Hall & Salisbury
SP932: Valve 5' inside dyke wall 27' W from NE corner of neutralization tank form wall

VOID

C | 28 | 10 HALL JAG

SP080 DETAIL

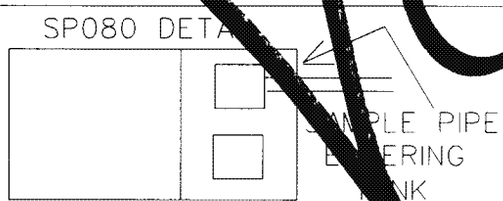

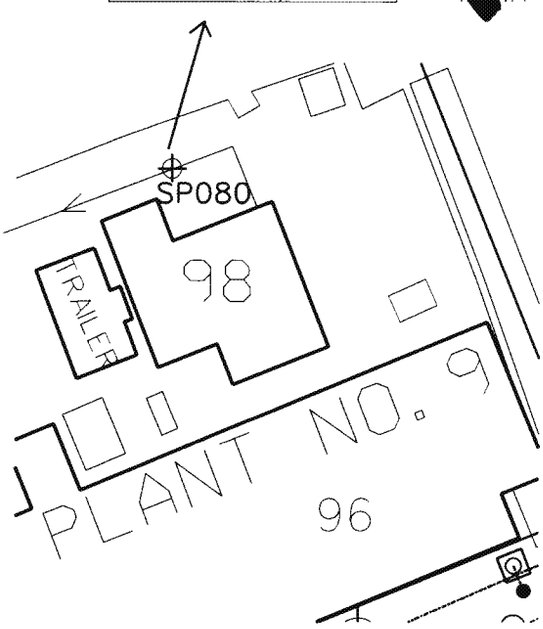

SP080: Inlet to sump (double MH) N of building #98

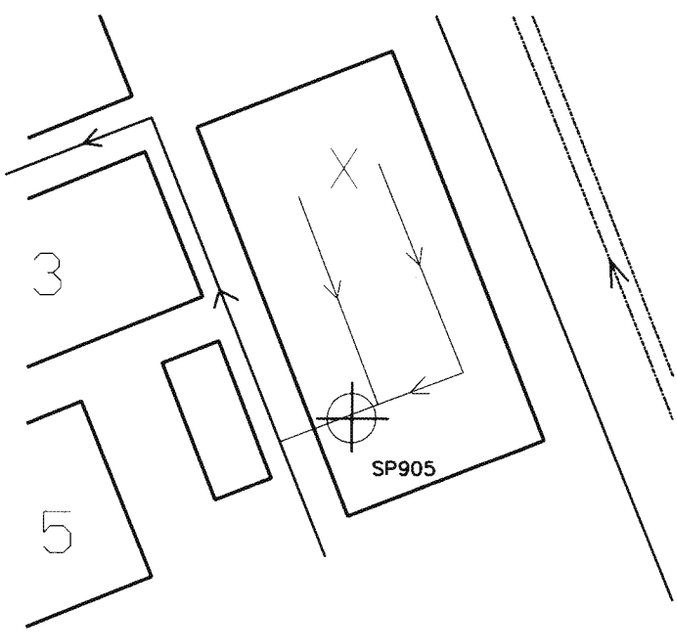

SP905: MH inside building X, 12' W, 5' S of W door (Total flow out)

Company Name: MALLINCKRODT, INC.

MSD Account No.: 21120596-00

Premise Address: 3600 N. 2ND ST.

Zip: 63147

Date: 2/12/09

MSD

MSD-DEC INDUSTRY SAMPLING MAP

SP912: Valve on discharge line from outdoor Tank #450 on SE corner of Building 504

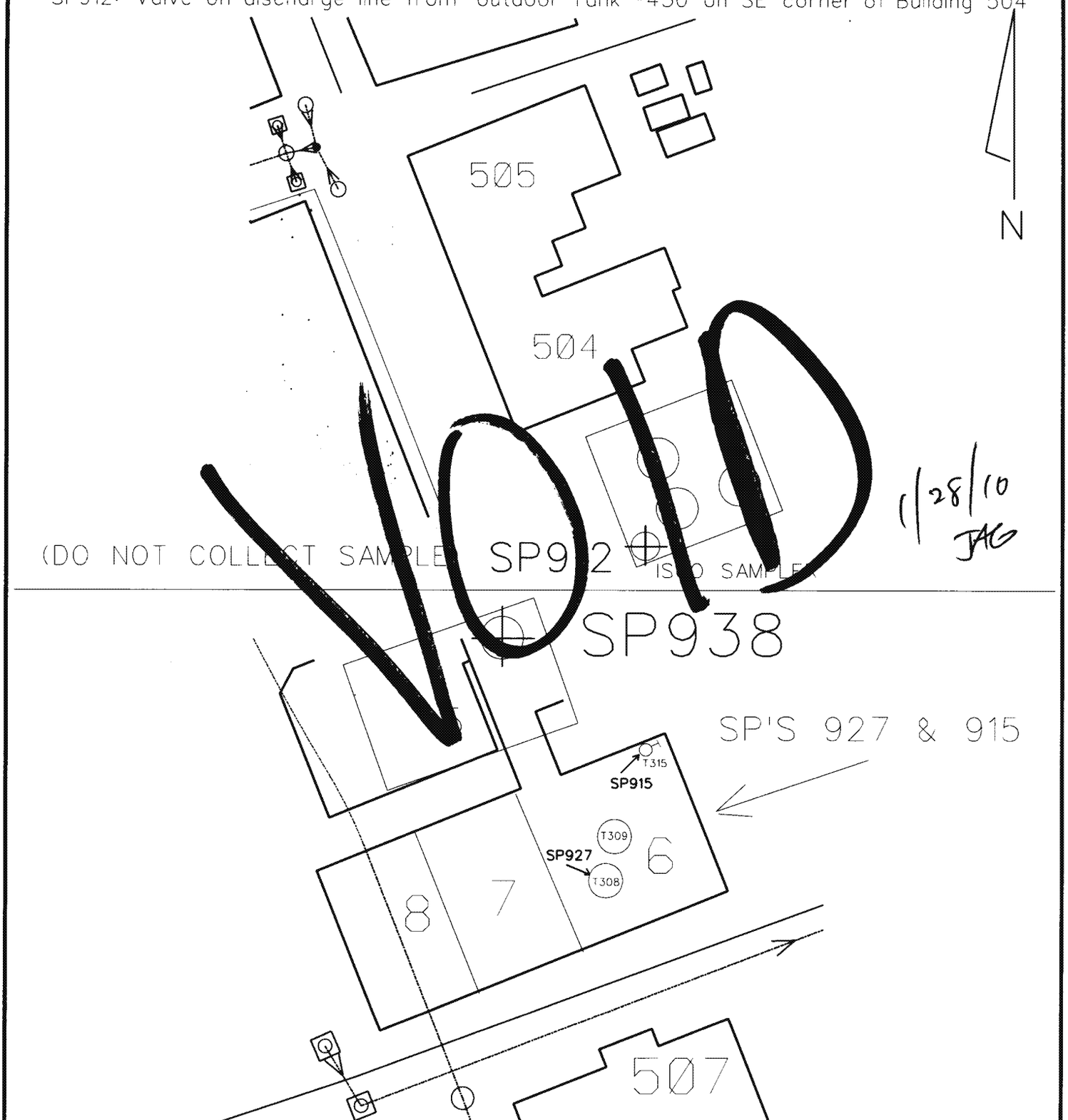

VOID

1/28/10
JAG

SP915: Valve on E side of T-315 at inside NE corner of bldg 6
SP927: Tank 308 (acid press tank) in bldg 6
SP938: 6" floor drain in far SW corner of room in Building 5, Room 406

Company Name: MALLINCKRODT, INC.

MSD Account No.: 21120596-00

Premise Address: 3600 N. 2ND ST.

Date: 2/12/09

Zip: 63147

SP920: Valve on discharge line, outside SW corner of diked area E of bldg 512
SP935: 1/2" steel pipe on inside of concrete wall S of North stairs - Bldg 512
SP937: Valve on 2nd level on W side near pipe bridge N of bldg 501

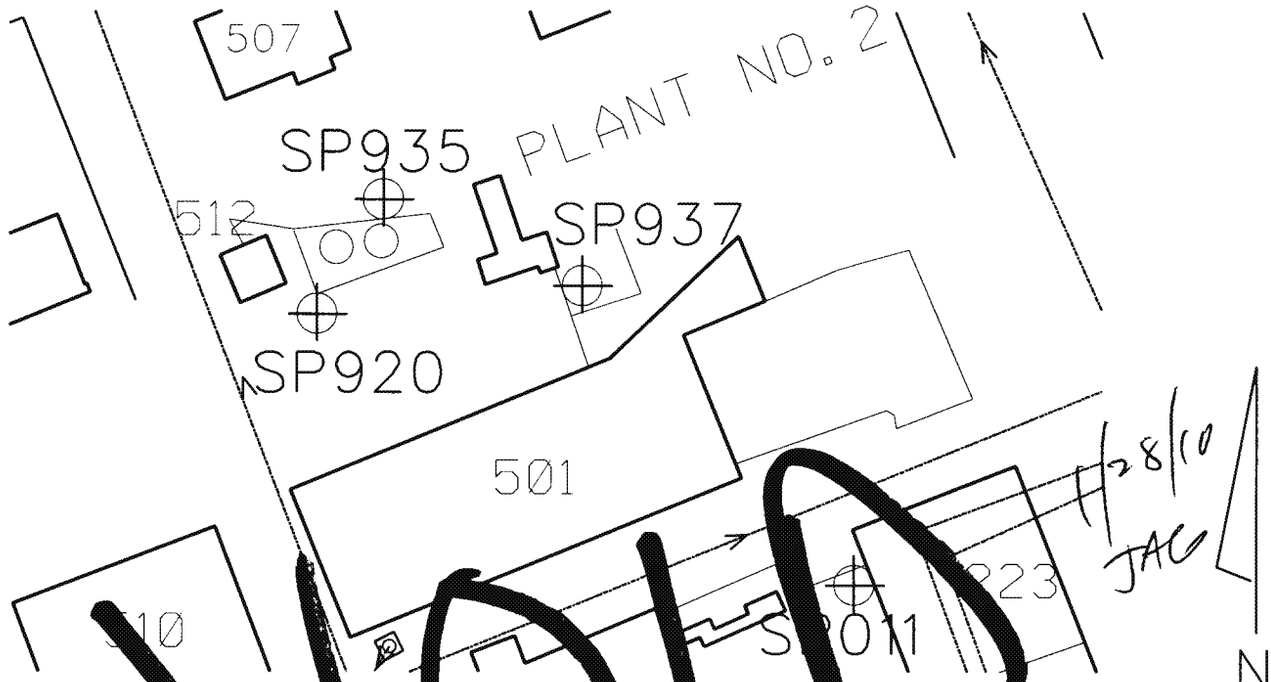

VOID

1/28/10
JAC

SP011: MH with square lid 18' S from NW corner of bldg 223 under iron ladder

* SP011 IS UPSTREAM OVERFLOW PT. CHECK W/ CONTACT TO SEE IF OVERFLOW IS OCCURRING

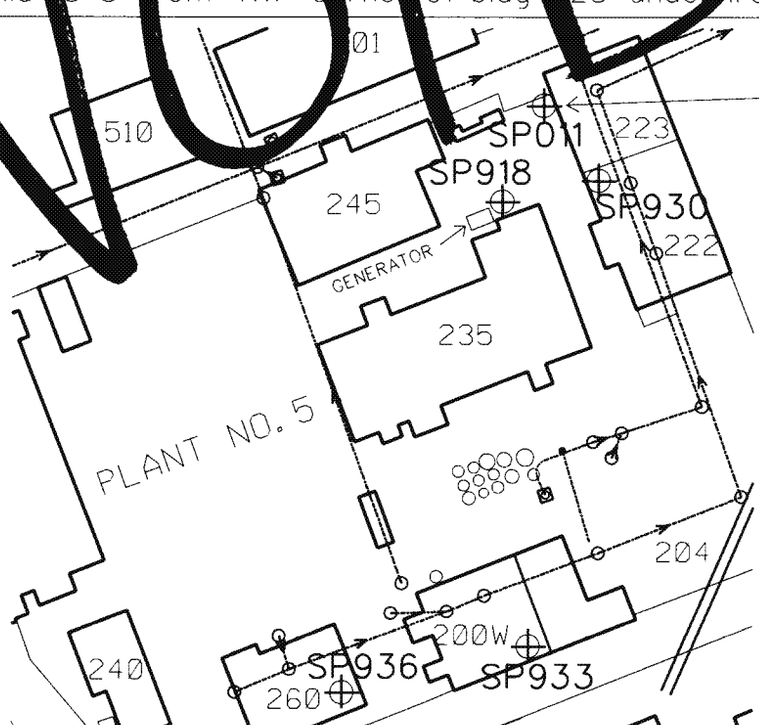

SP011 IS UNDER IRON LADDER

SP918: Valve on line under stairwell, on N side of bldg 235, E of generator
SP930: Valve on 4" PVC line inside NW corner of Bldg. 222S, only when sump is discharging from tanks 300 and 355
SP933: Valve on Tank #1 10' NW of SE corner of Bldg. 200W - only when disch. 439 waste
SP936: Valve on 1/2" line 1' from hydrogenerator bldg 8' from S wall in SE corner of bldg 260

Company Name: MALLINCKRODT, INC. MSD Account No.: 21120596-00

Premise Address: 3600 N. 2ND ST. Date: 2/12/09 Zip: 63147

MSD-DEC INDUSTRY SAMPLING MAP

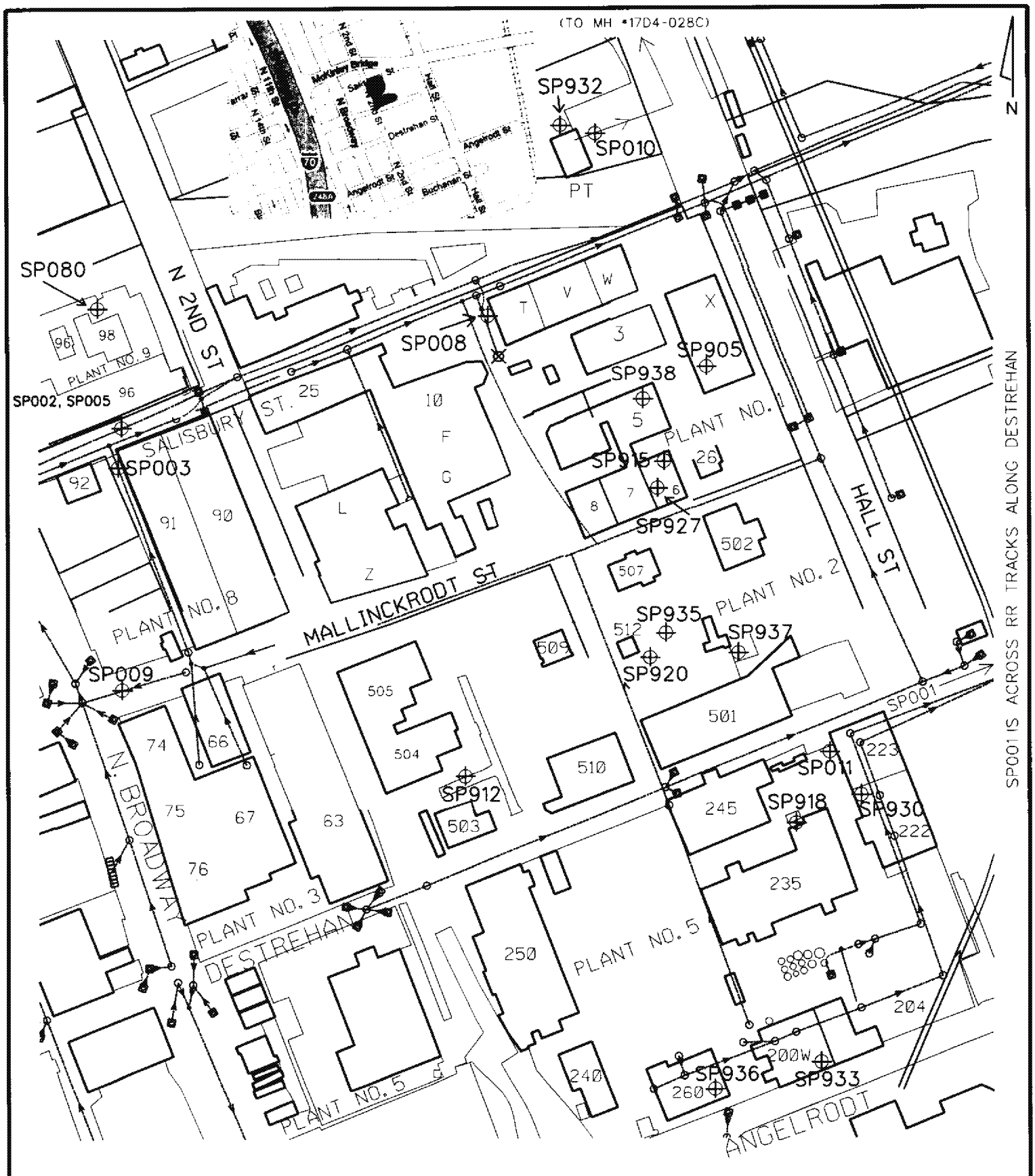

Company Name: MALLINCKRODT, INC.

MSD Account No.: 21120596-00

Premise Address: 3600 N. 2ND ST.

Zip: 63147

Date: 6/25/08

Page 1 of 5

MSD-DEC INDUSTRY SAMPLING MAP

SP001: MH (Gatewell) at foot of Destrahan 100' E of RR

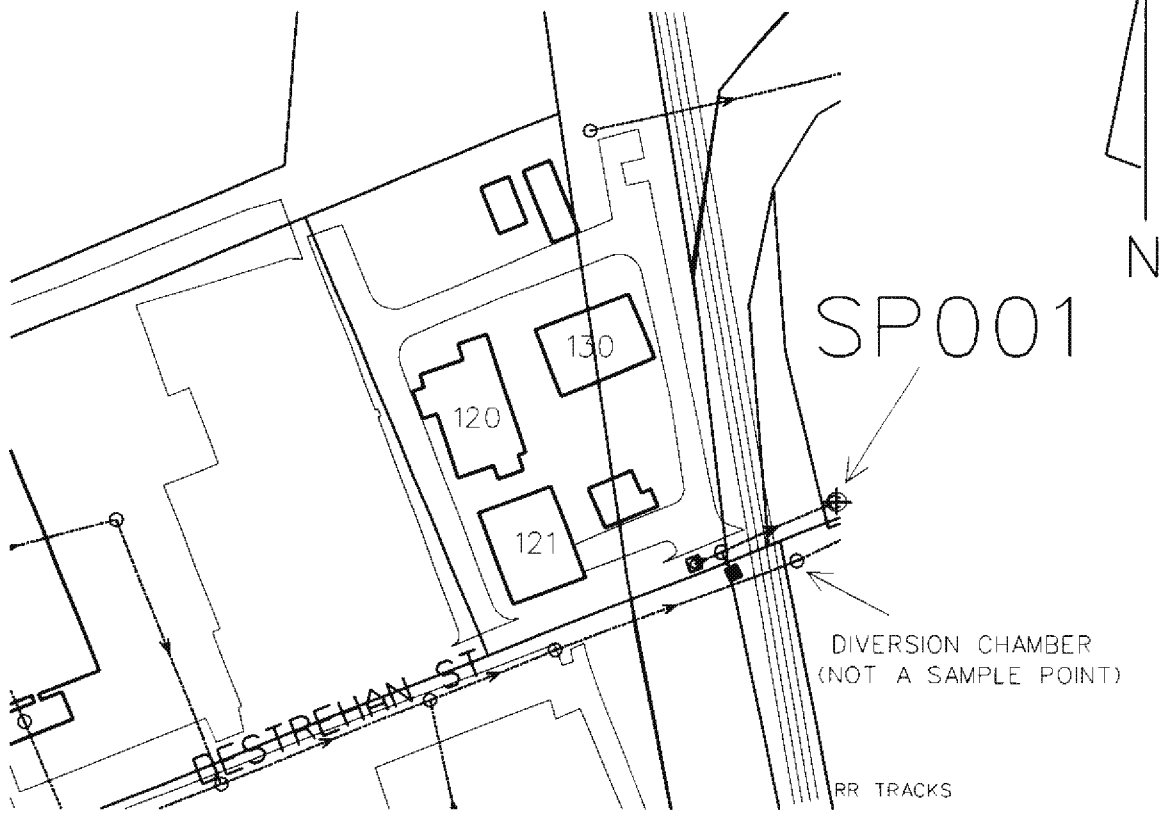

SP'S 005 & 002

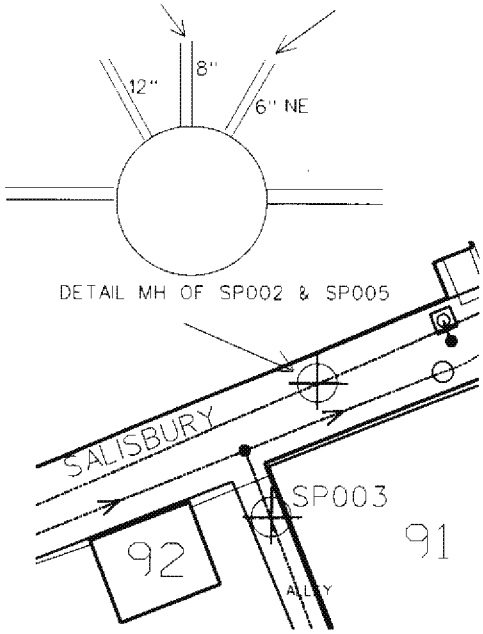

SP002: MH 5' S of bldg #96, 30' E of SP 003, (6" pipe from NE, 3' down)
SP003: MH in alley at Salisbury, 12' W, 3' S of NW corner of building 91
SP005: MH 5' S of building #96, 30' E of SP 003 (Center pipe, 8" dia., 3' down)

SAMPLE IN HOLE IN METAL PLATE UNDER METAL GRATE

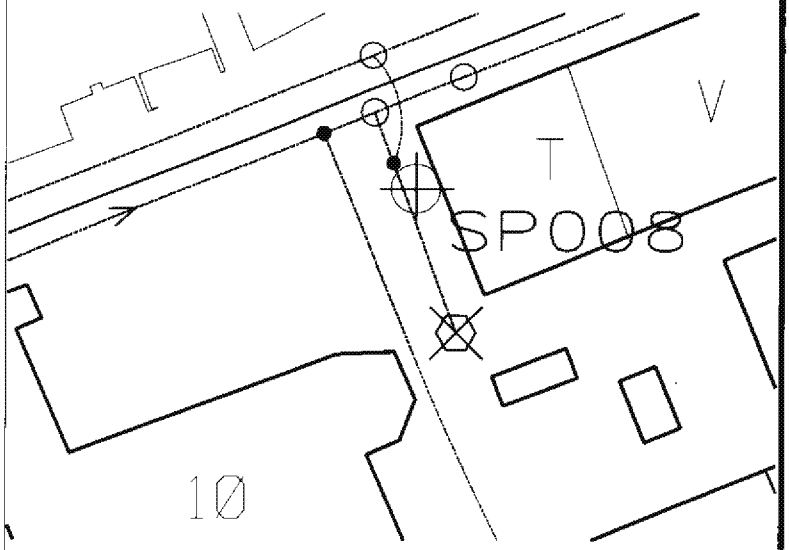

SP008: Overflow chamber on N side of pump station on W side of building 1

Company Name: MALLINCKRODT, INC.

MSD Account No.: 21120596-00

Premise Address: 3600 N. 2ND. ST.

Zip:63147

Date:2/12/09

MSD-DEC INDUSTRY SAMPLING MAP

SP009: MH in Mallinckrodt St 27' E of Broadway, 4' from S curb

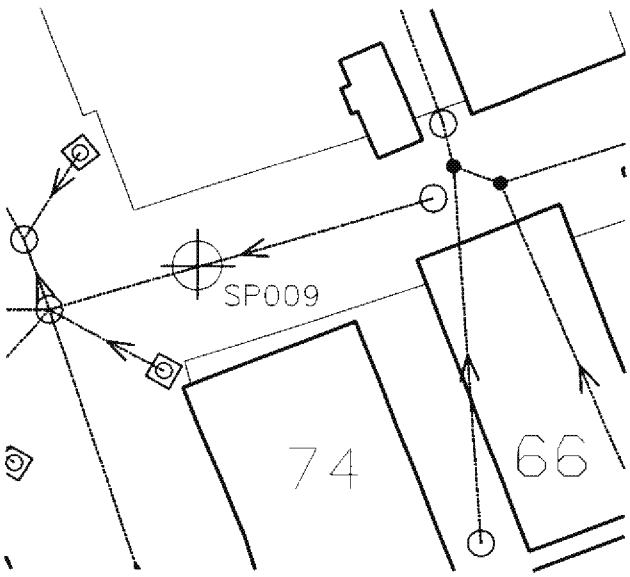

SP010 MH DETAIL

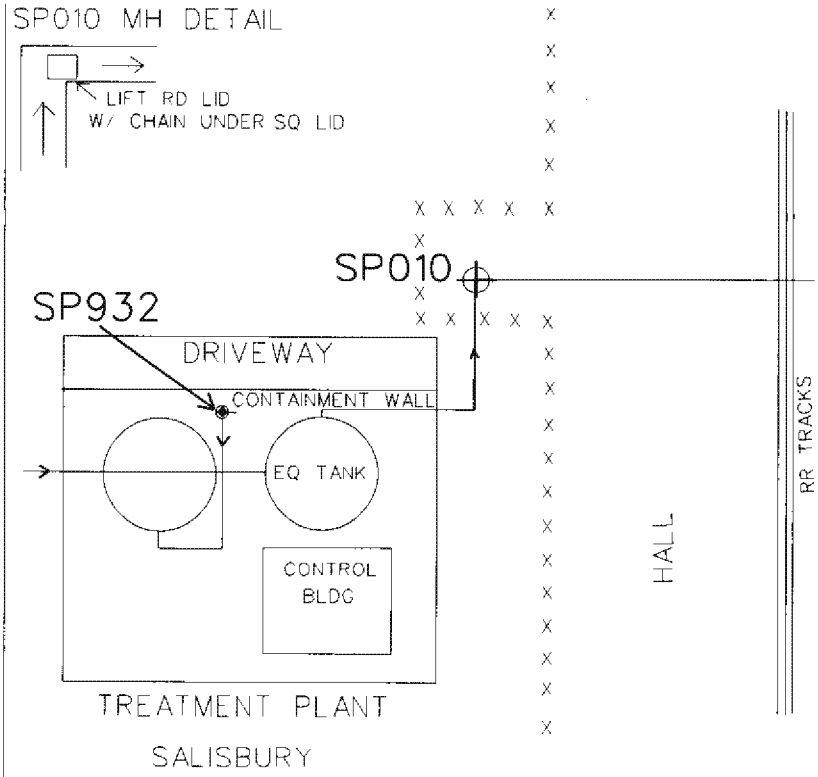

SP010: MH w/square lid 50' N of neutralization control building at Hall & Salisbury

SP932: Valve 5' inside N dyke wall 27' W from NE corner of neutralization tank farm wall

SP080 DETAIL

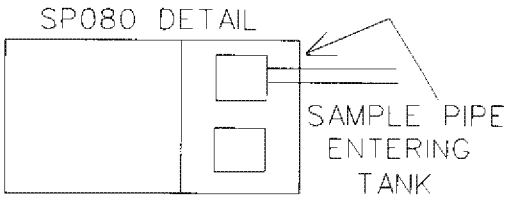

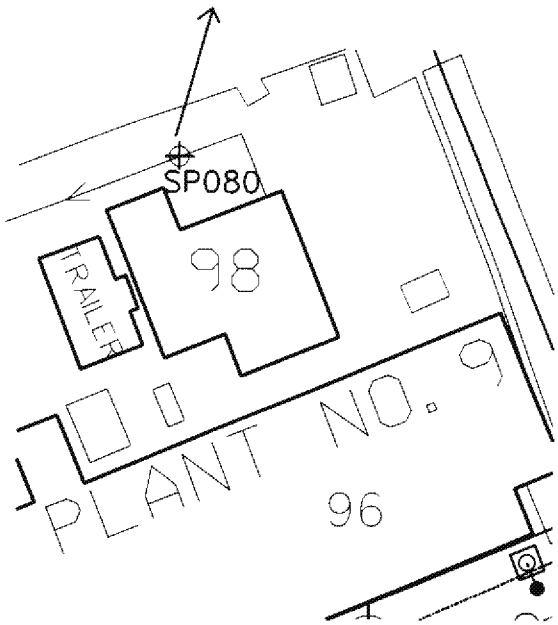

SP080: Inlet to sump (double MH) N of building #98

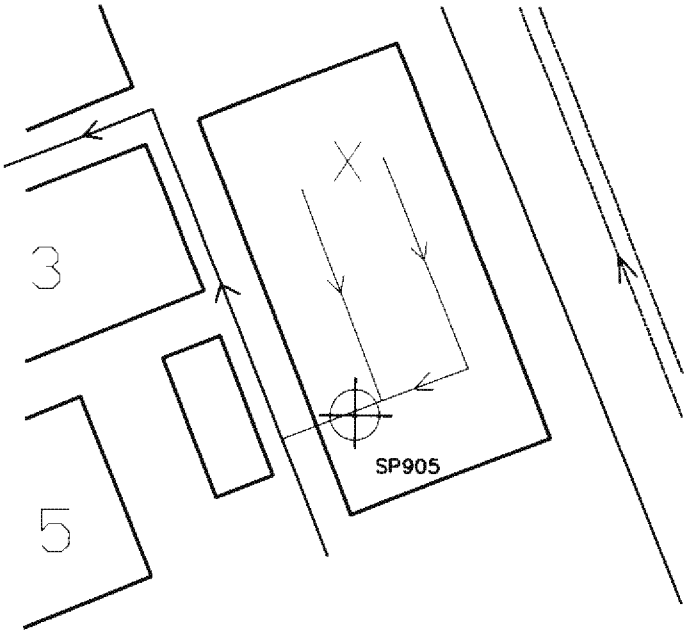

SP905: MH inside building X, 12' W, 5' S of W door (Total flow out)

Company Name: MALLINCKRODT, INC.

MSD Account No.: 21120596-00

Premise Address: 3600 N. 2ND ST.

Zip: 63147

Date: 2/12/09

MSD-DEC INDUSTRY SAMPLING MAP

SP912: Valve on discharge line from outdoor Tank #450 on SE corner of Building 504

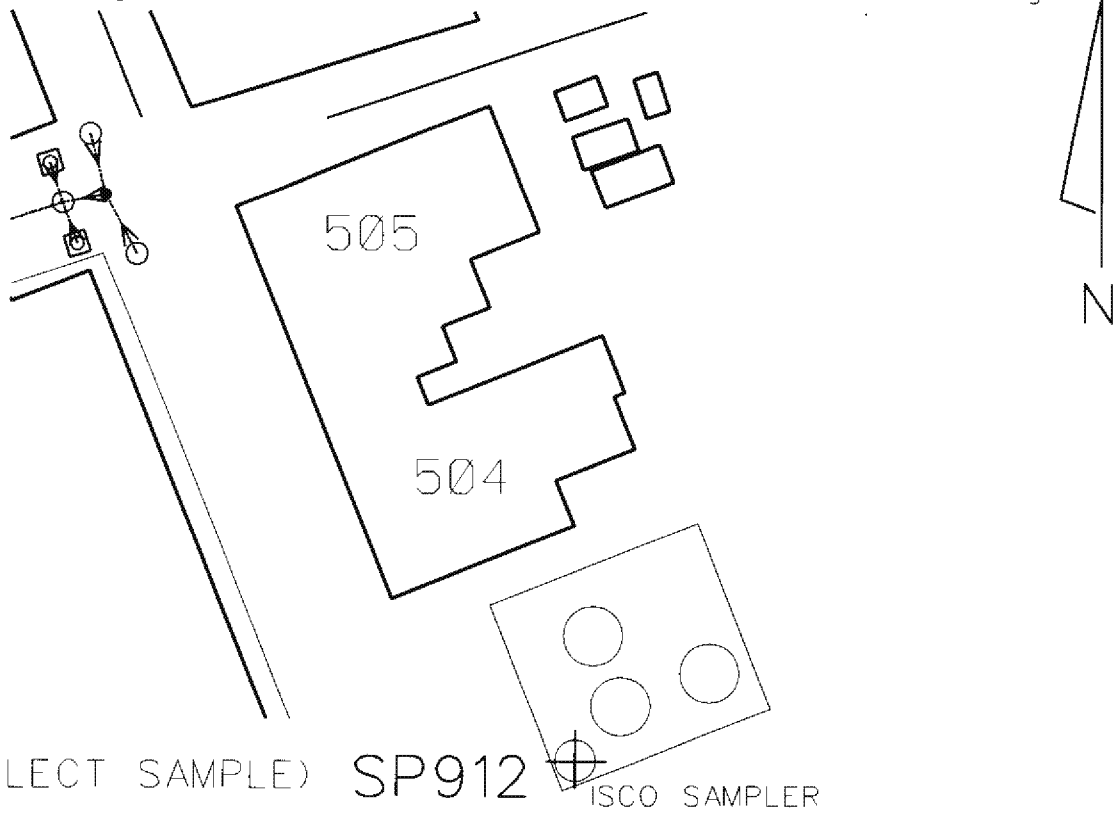

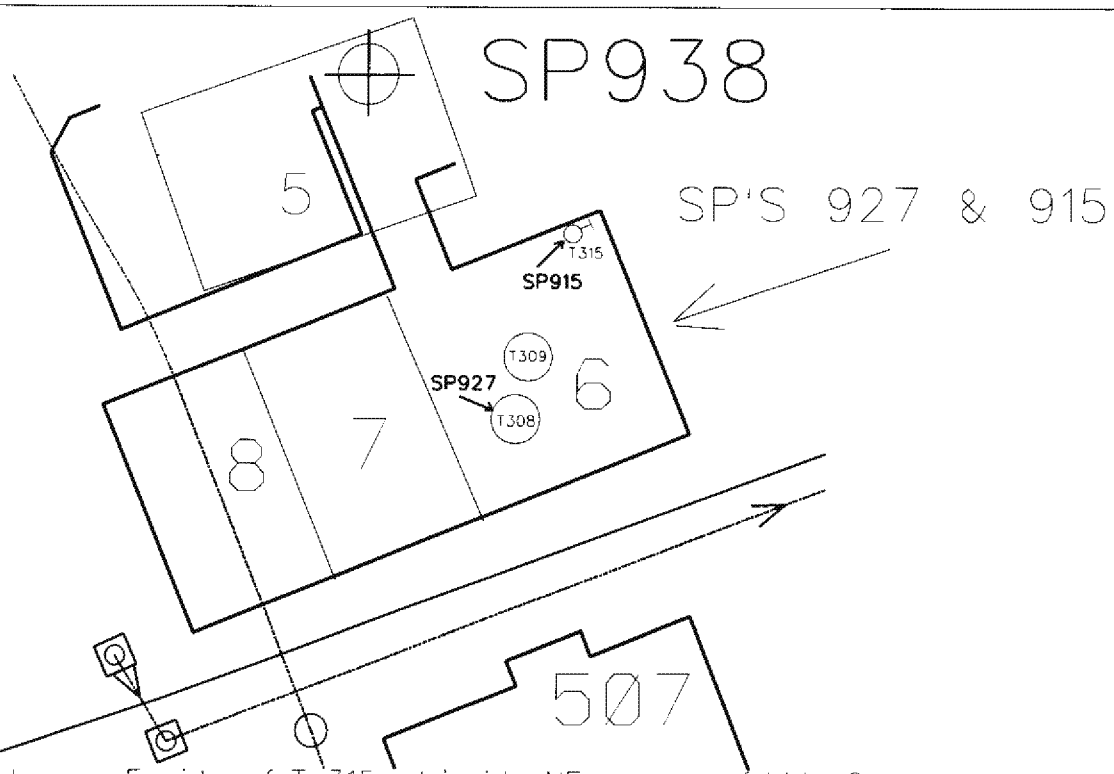

SP915: Valve on E side of T-315 at inside NE corner of bldg 6
SP927: Tank 308 (acid press tank) in bldg 6
SP938: 6" floor drain in far SW corner of room in Building 5, Room 406

Company Name: MALLINCKRODT, INC. MSD Account No.: 21120596-00

Premise Address: 3600 N. 2ND ST. Date: 2/12/09 Zip: 63147

MSD-DEC INDUSTRY SAMPLING MAP

SP920: Valve on discharge line, outside SW corner of diked area E of bldg 512
SP935: ½" steel pipe on inside of concrete wall S of North stairs - Bldg 512
SP937: Valve on 2nd level on W side near pipe bridge N of bldg 501

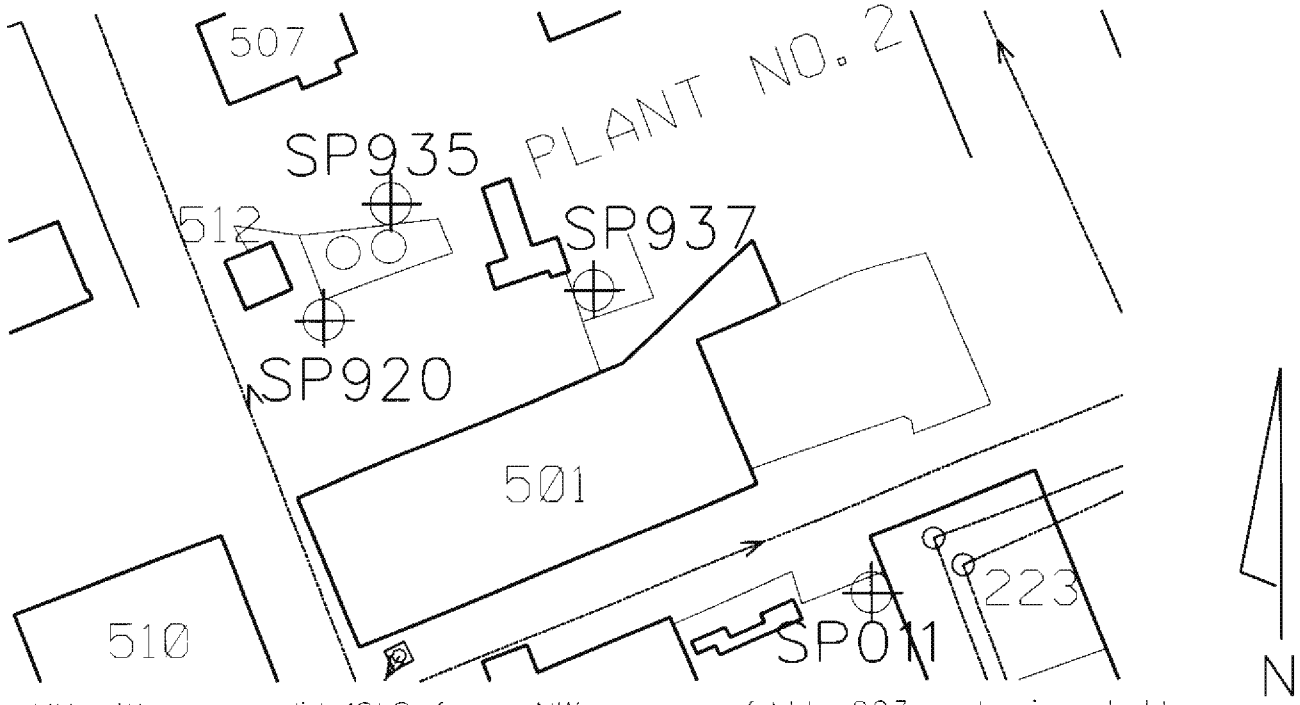

SP011: MH with square lid 18' S from NW corner of bldg 223 under iron ladder

* SP011 IS UPSTREAM OVERFLOW PT. CHECK W/ CONTACT TO SEE IF OVERFLOW IS OCCURRING

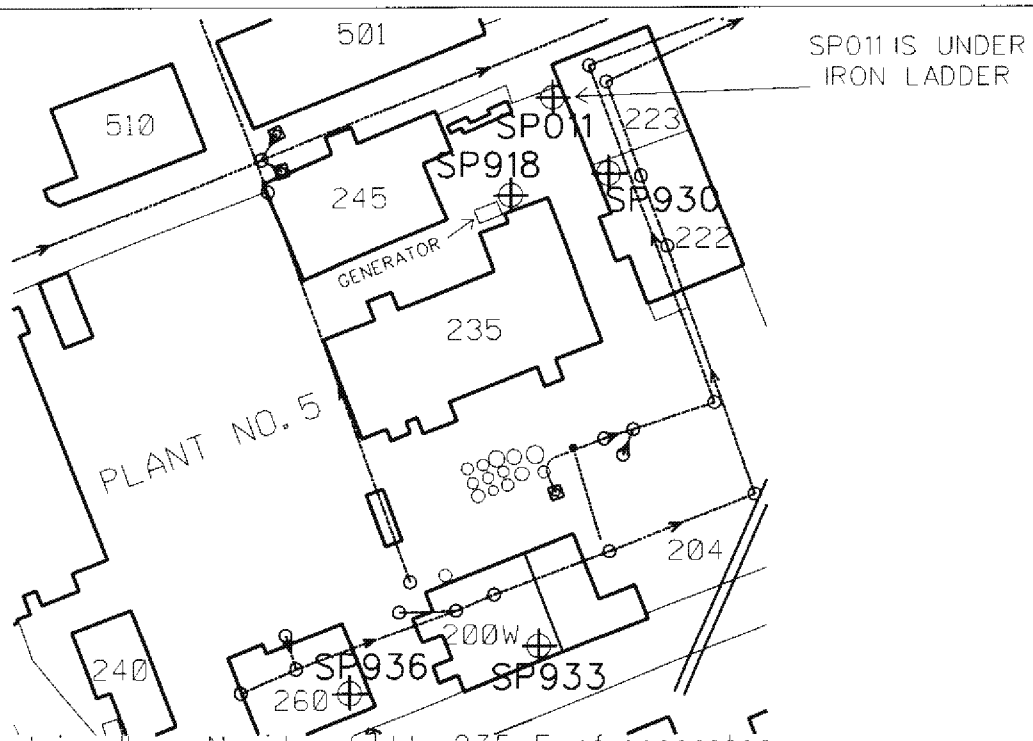

SP918: Valve on line under stairwell, on N side of bldg 235, E of generator
SP930: Valve on 4" PVC line inside NW corner of Bldg. 222S, only when sump is discharging from tanks 300 and 355
SP933: Valve on Tank #1 10' NW of SE corner of Bldg. 200W - only when disch. 439 waste
SP936: Valve on ½" line 1' from hydrogenerator bldg 8' from S wall in SE corner of bldg 260

Company Name: MALLINCKRODT, INC. MSD Account No.: 21120596-00

Premise Address: 3600 N. 2ND ST. Date: 2/12/09 Zip: 63147

MSD-DEC INDUSTRY SAMPLING MAP

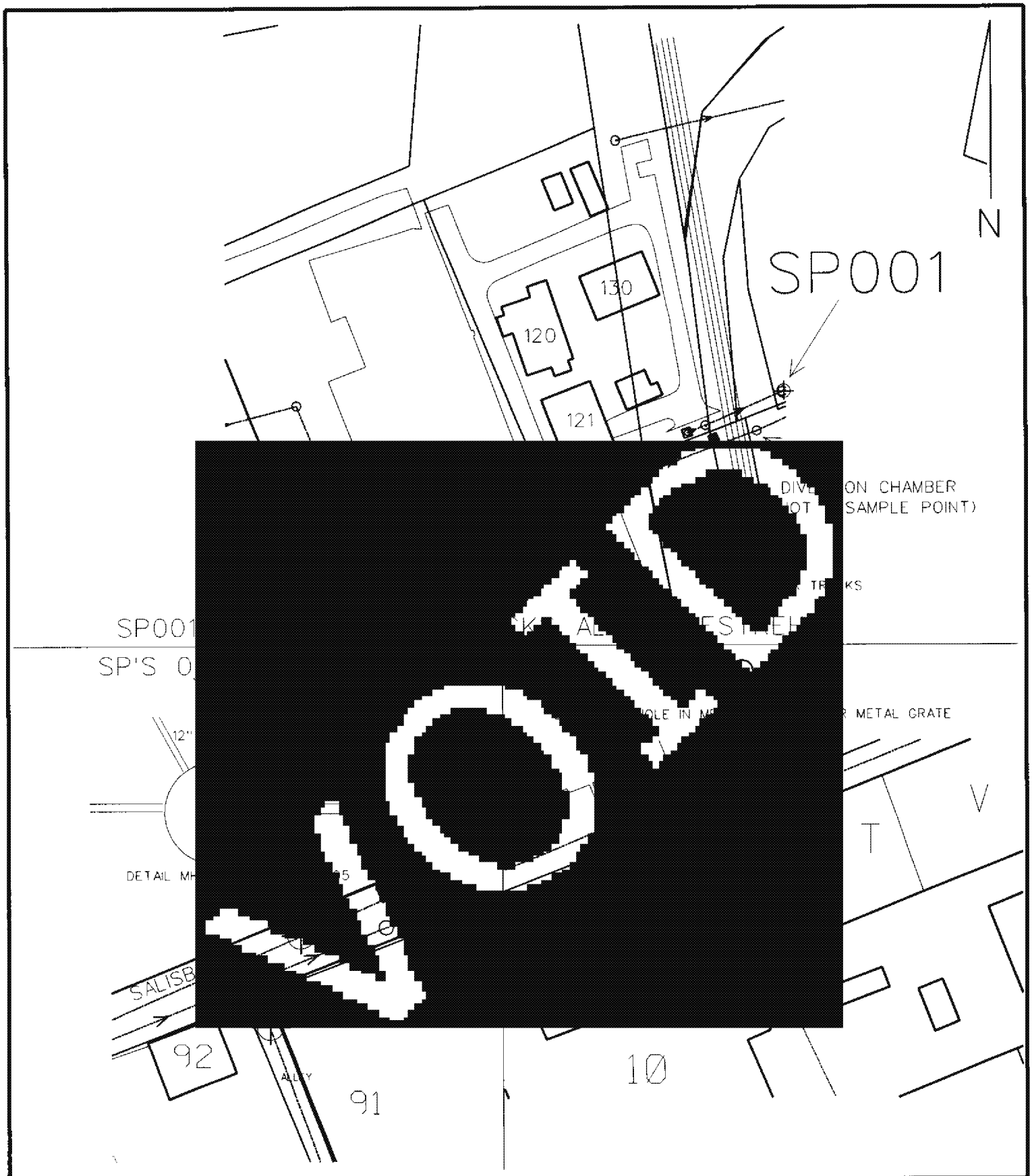

Company Name: MALLINCKRODT, INC.

MSD Account No.: 21120596-00

Premise Address: 3600 N. 2ND. ST.

Zip: 63147

Date: 6/25/08

MSD-DEC INDUSTRY SAMPLING MAP

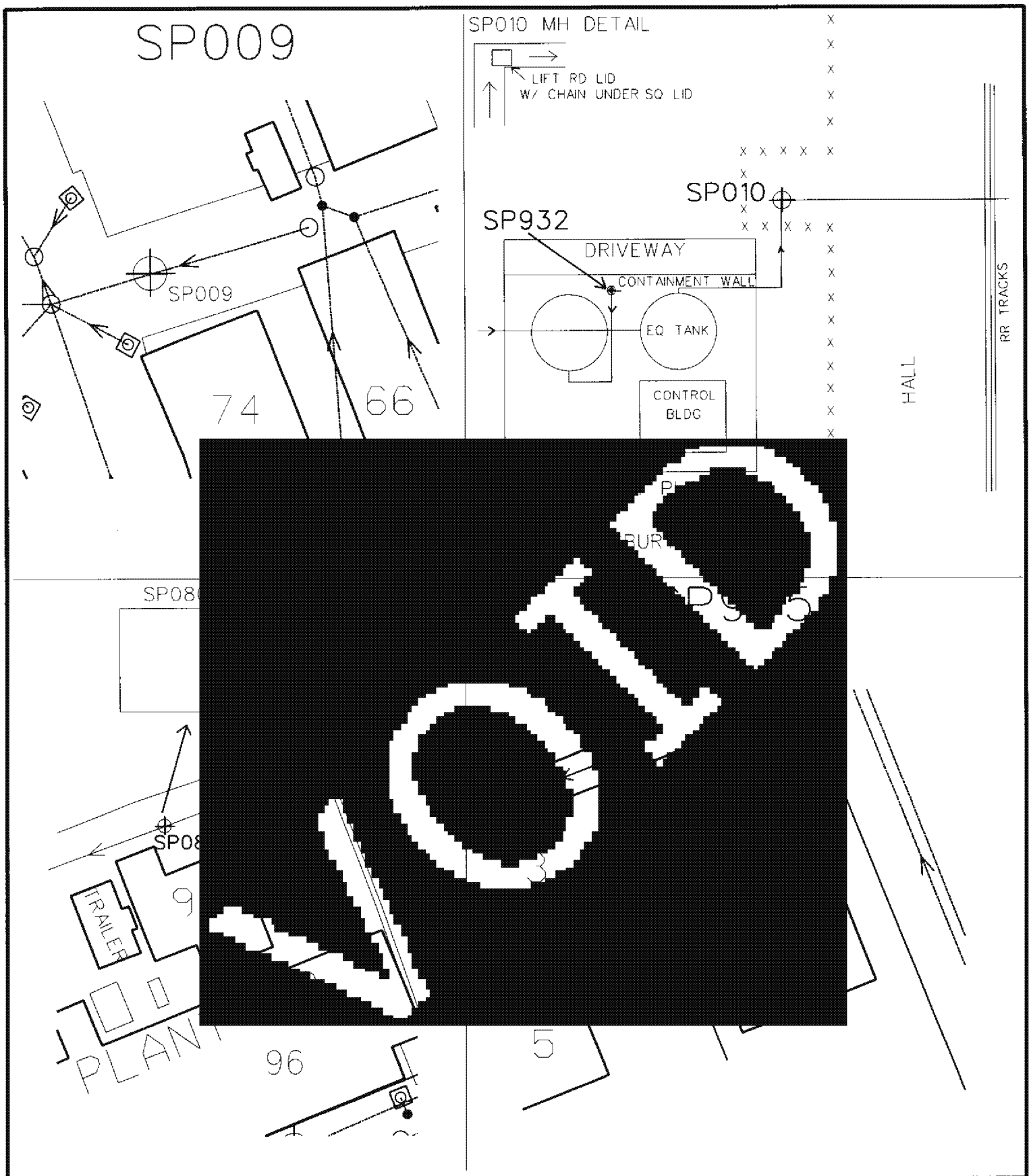

Company Name: MALLINCKRODT, INC.

MSD Account No.: 21120596-00

Premise Address: 3600 N. 2ND ST.

Zip: 63147

Date: 6/25/08

MSD-DEC INDUSTRY SAMPLING MAP

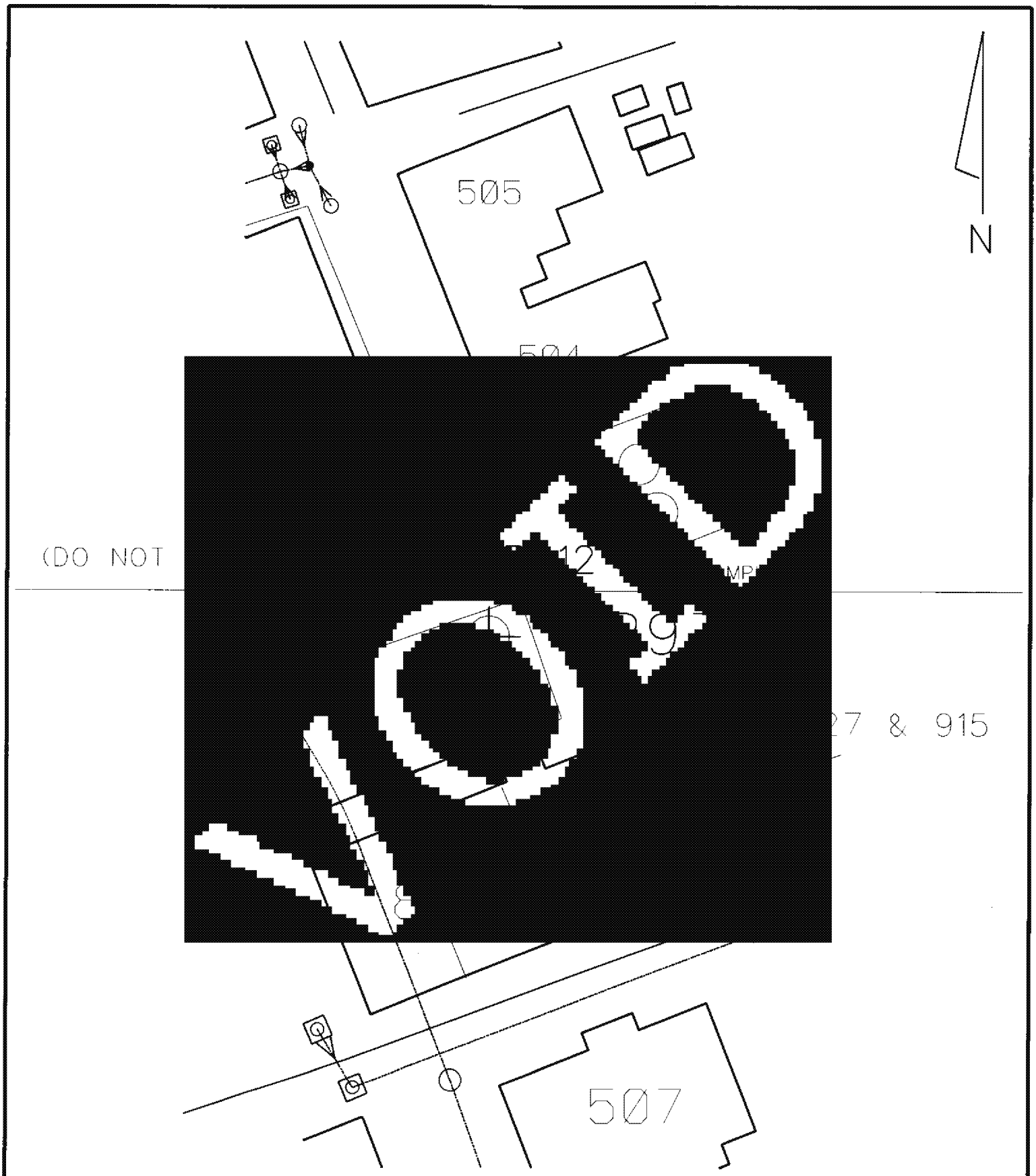

Company Name: MALLINCKRODT, INC.

MSD Account No.: 21120596-00

Premise Address: 3600 N. 2ND ST.

Date: 63147

MSD-DEC INDUSTRY SAMPLING MAP

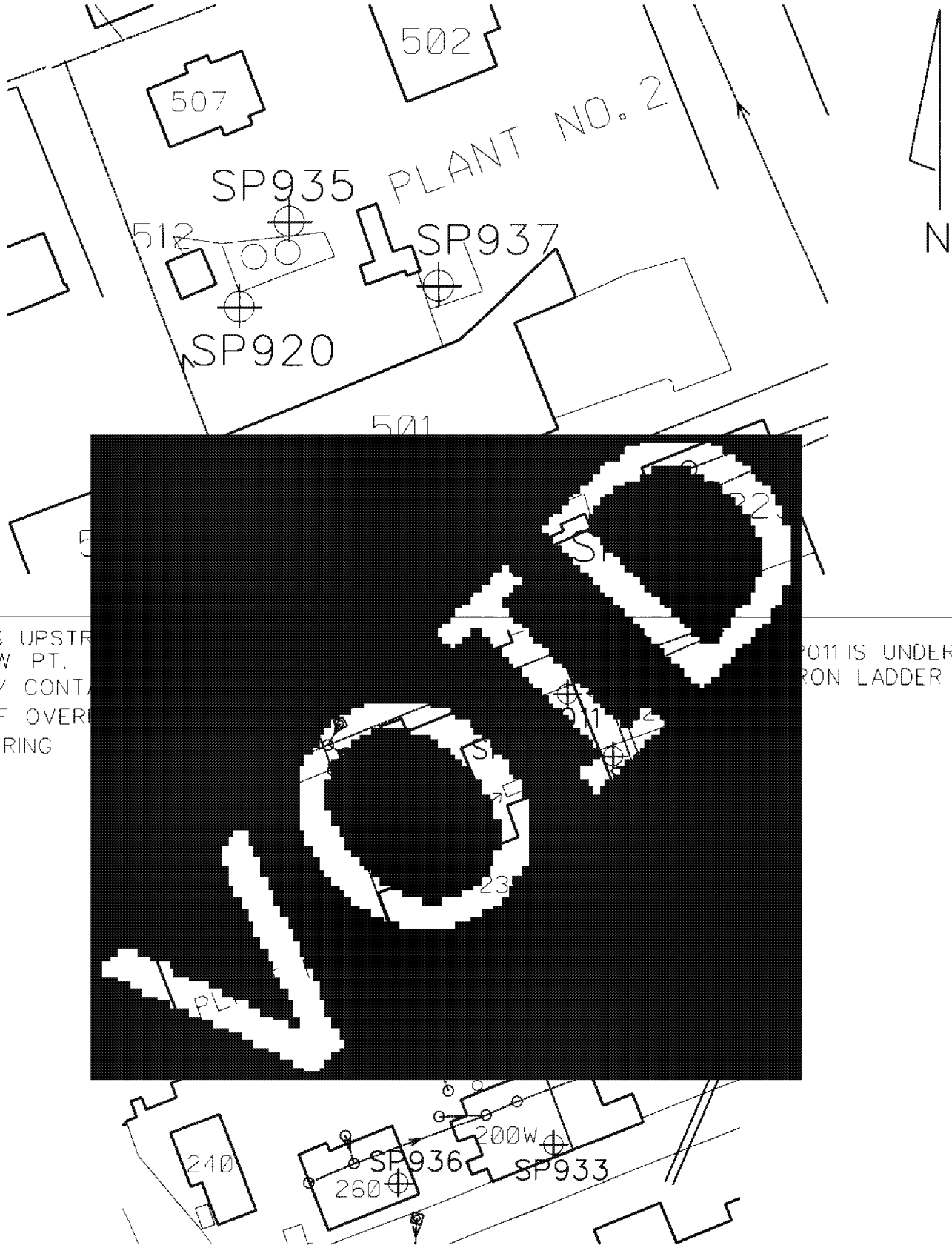

Company Name: MALLINCKRODT, INC.

MSD Account No.: 21120596-00

Premise Address: 3600 N. 2ND ST.

Date: 6/25/08

D-DEC INDUSTRY SAMPLING M MSD

Company Name: MALLINCKRODT CHEMICAL, INC
Premise Address: 3600 N. 2ND STREET
Zip Code: 63147
Nearest Intersection: BROADWAY&MALLINCKRODT
Wunnenberg: E18-27 Base Map: 17D4
MSD Account No.: 21120596-00
Total No. of Active Sample Points: 21
Active SP Nos: 001,002,003,005,008,009,010,011
080,905,912,915,918
920,927,930,932,933,935,936,937

Facility Contact: LISA MEYER
Secondary Contact: JEFF DEWALD
Must contact prior to sampling: Yes X No
Reason: INSIDE SAMPLE POINTS & SECURITY
Company wants to split samples: Yes No X

GIVE CONTACT FLOW MEAS FORM BEFORE SAMPLING 905
TURN OFF WIRELESS PHONES-"FLASH" DANGER
NOTE FOR SP 927: CO. WILL COLLECT SAMPLE WHILE WE OBSERVE (FOR SAFETY REASONS).
SP001: SAMPLE AT MH NE OF DIVERSION CHAMBER, NOT DIVERSION CHAMBER ITSELF

Map Effective Date: 12/13/06 By: JAG
Map Revision Date: 6/26/07 By: JAG
Map Revision Date: By:
Map Void Date: 6/25/08 By: JAG

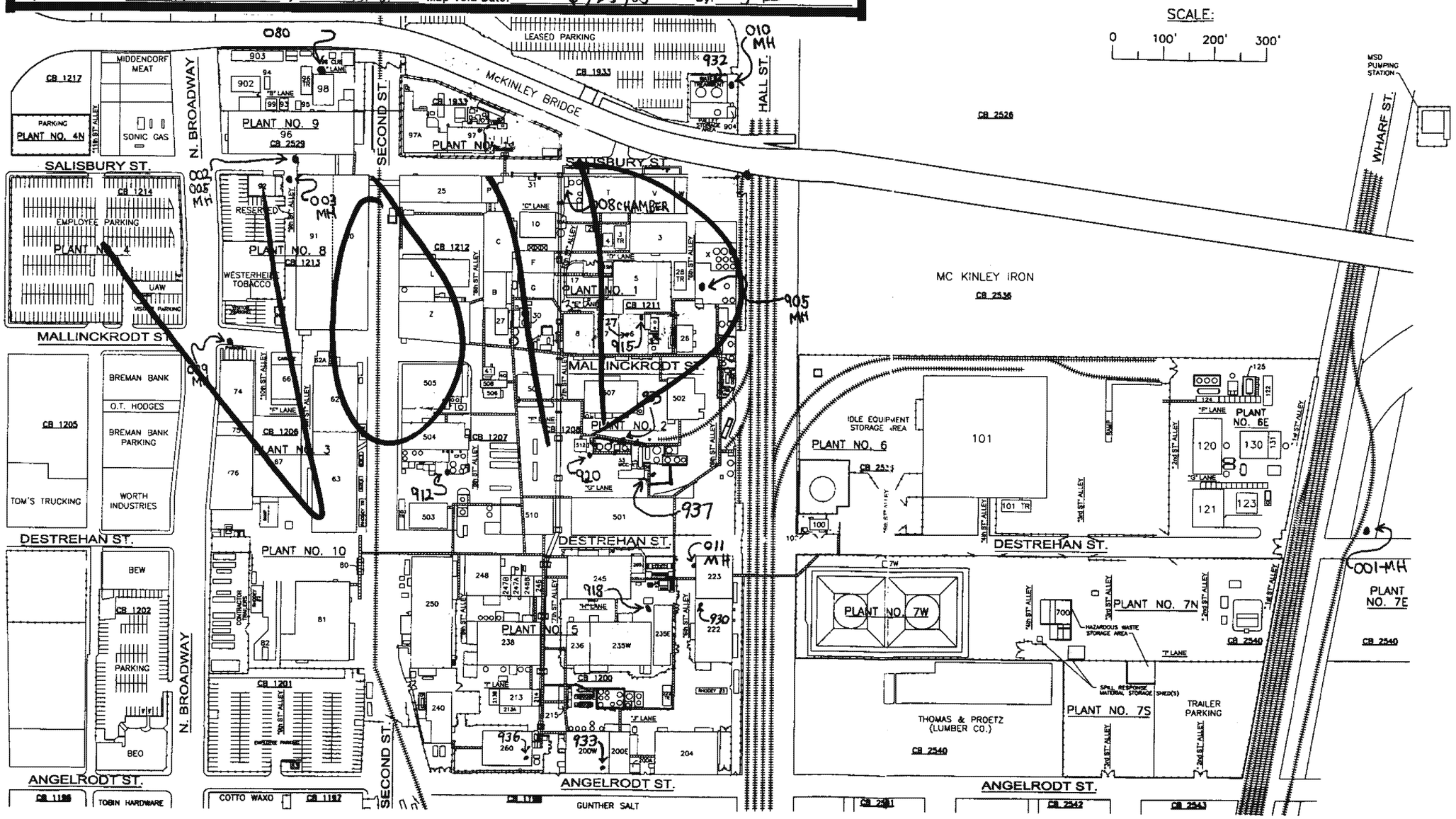

MSD-DEC INDUSTRY SAMPLING MAP

Company Name: MALLINCKRODT CHEMICAL, INC
Premise Address: 3600 N. 2ND STREET
Zip Code: 63147
Nearest Intersection: BROADWAY&MALLINCKRODT
Wunnenberg: E18-27 Base Map: 17D4
MSD Account No.: 21120596-00
Total No. of Active Sample Points: 21
Active SP Nos: 001,002,003,005,008,009,010,011
080,905,912,915,918
920,927,930,932,933,935,936,937

Facility Contact: LISA MEYER
Secondary Contact: JEFF DEWALD
Must contact prior to sampling: Yes X No
Reason: INSIDE SAMPLE POINTS & SECURITY
Company wants to split samples: Yes No X

GIVE CONTACT FLOW MEAS FORM BEFORE SAMPLING 905
TURN OFF WIRELESS PHONES-"FLASH" DANGER
NOTE FOR SP 927: CO. WILL COLLECT SAMPLE WHILE WE OBSERVE (FOR SAFETY REASONS).
SP001: SAMPLE AT MH NE OF DIVERSION CHAMBER, NOT DIVERSION CHAMBER ITSELF

Map Effective Date: 12/13/06 By: JAG
Map Revision Date: 6/26/07 By: JAG
Map Revision Date: By:
Map Void Date: By:

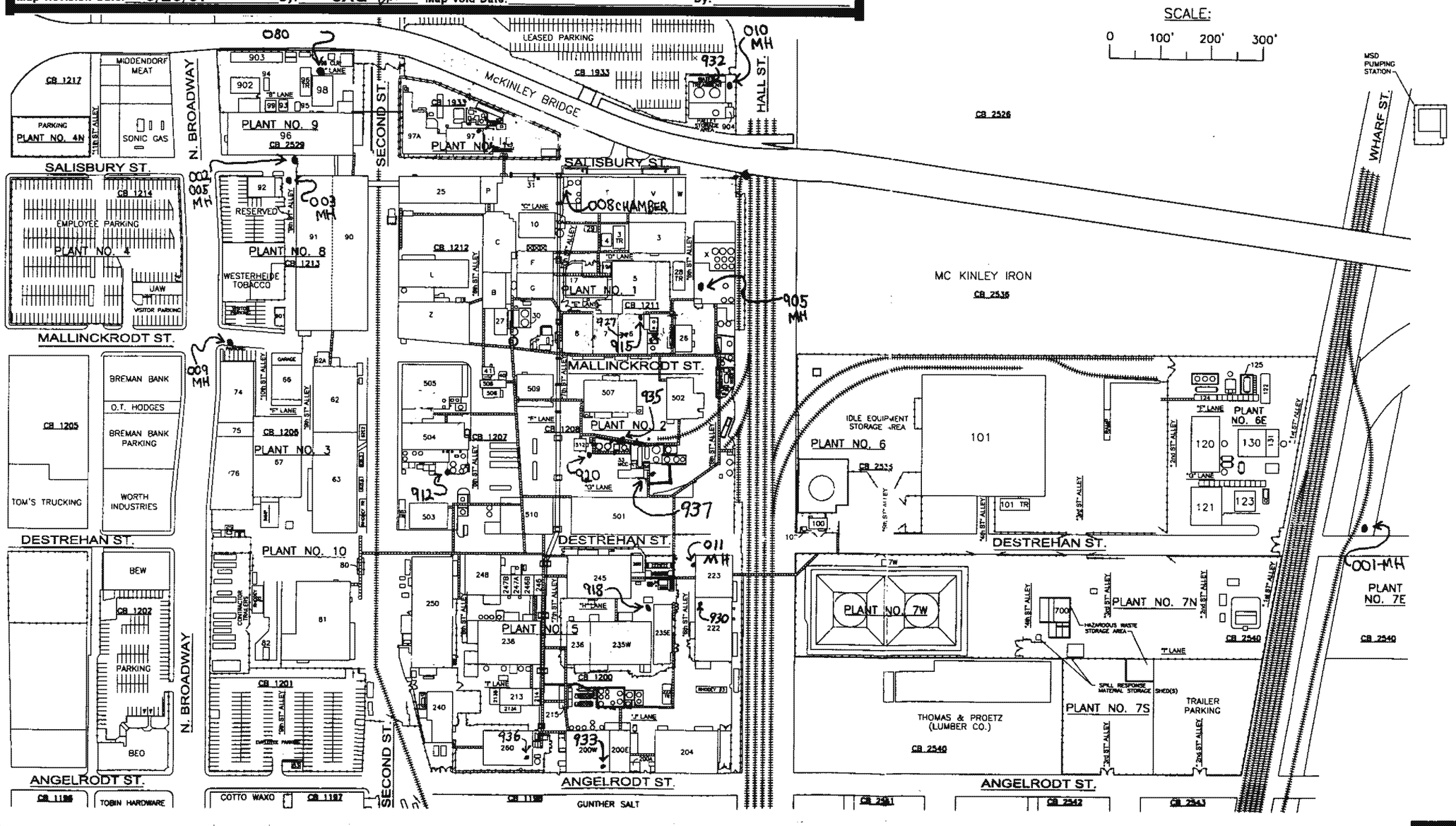

MSD-DEC INDUSTRY SAMPLING MAP

Company Name: MALLINCKRODT CHEMICAL, INC

Premise Address: 3600 N. 2ND STREET

Zip Code: 63147

MSD Account No.: 21120596-00

Use this sheet only for page 2 and following pages.

This page is not valid unless a page 1 using the proper form is attached.

Map Effective/Revision/Void Date must correspond to the date on page 1.

Map Effective Date: 6/26/07 By: JAG

Map Revision Date: By:

Map Revision Date: By:

Map Void Date: 6/25/08 By: JAG

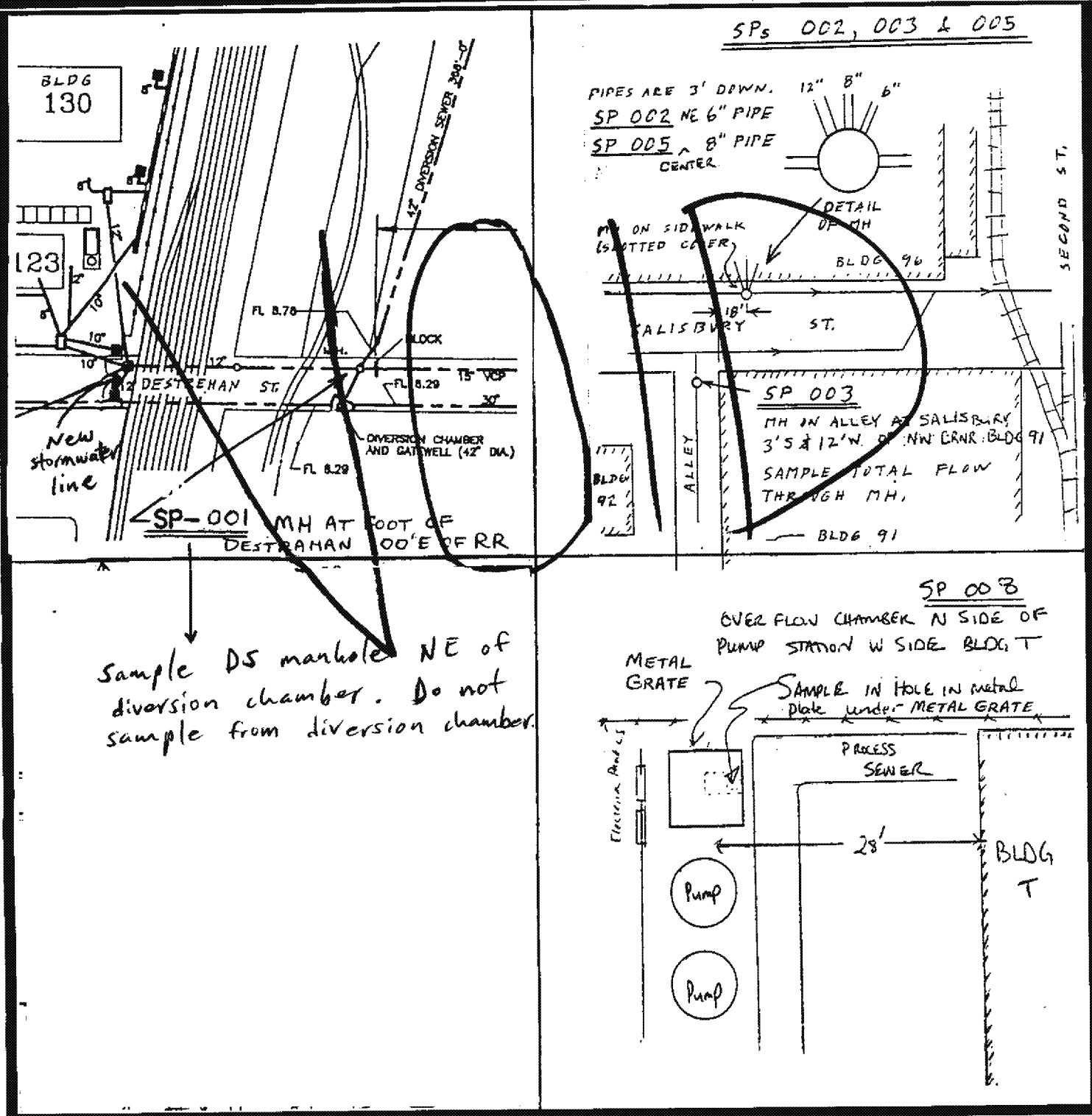

MAP IS INVALID IF NOT DATED AND INITIALED OR IF VOID DATE IS FILLED IN

MSD-DEC INDUSTRY SAMPLING MAP

Company Name: MALLINCKRODT CHEMICAL, INC

Premise Address: 3600 N. 2ND STREET

Zip Code: 63147

MSD Account No.: 21120596-00

Use this sheet only for page 2 and following pages.

This page is not valid unless a page 1 using the proper form is attached.

Map Effective/Revision/Void Date must correspond to the date on page 1.

Map Effective Date: 6/26/07 By: JAG Map Revision Date: By:

Map Revision Date: By: Map Void Date: 6/25/08 By: JAG

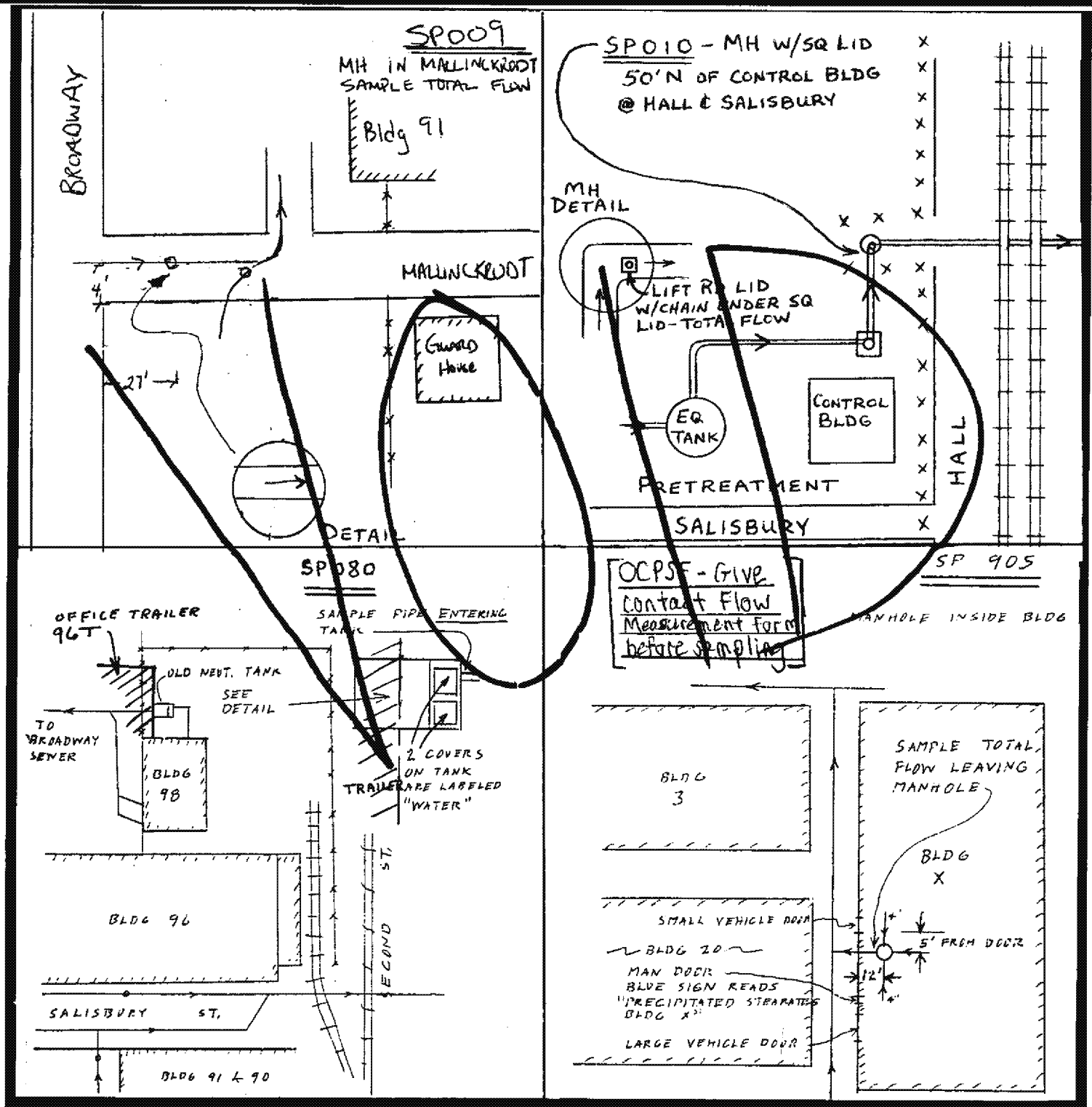

SP MAP DMM-1/95-2

MAP IS INVALID IF NOT DATED AND INITIALED OR IF VOID DATE IS FILLED IN

MSD-DEC INDUSTRY SAMPLING MAP

Company Name: MALLINCKRODT CHEMICAL, INC

Premise Address: 3600 N. 2ND STREET

Zip Code: 63147

MSD Account No.: 21120596-00

Use this sheet only for page 2 and following pages.

This page is not valid unless a page 1 using the proper form is attached.

Map Effective/Revision/Void Date must correspond to the date on page 1.

Map Effective Date: 6/26/07 By: JAG DVM Map Revision Date: By:

Map Revision Date: By: Map Void Date: 6/25/08 By: JAG

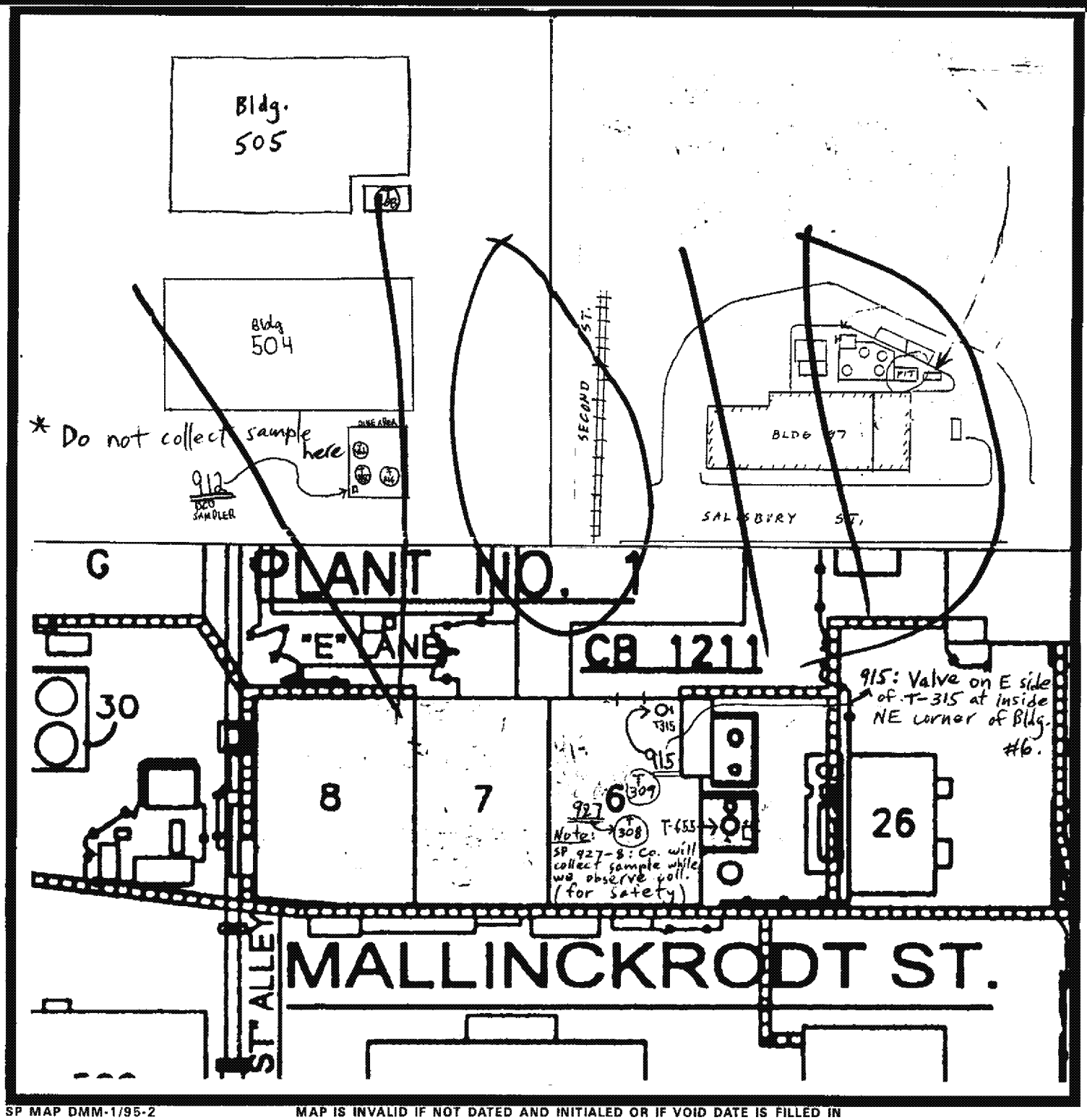

MAP IS INVALID IF NOT DATED AND INITIALED OR IF VOID DATE IS FILLED IN

MSD-DEC INDUSTRY SAMPLING MAP

Company Name: MALLINCKRODT CHEMICAL, INC

Premise Address: 3600 N. 2ND STREET

Zip Code: 63147

MSD Account No.: 21120596-00

Use this sheet only for page 2 and following pages.

This page is not valid unless a page 1 using the proper form is attached.

Map Effective/Revision/Void Date must correspond to the date on page 1.

Map Effective Date: 6/26/07 By: JAG

Map Revision Date: By:

Map Revision Date: By:

Map Void Date: 6/25/08 By: JAG

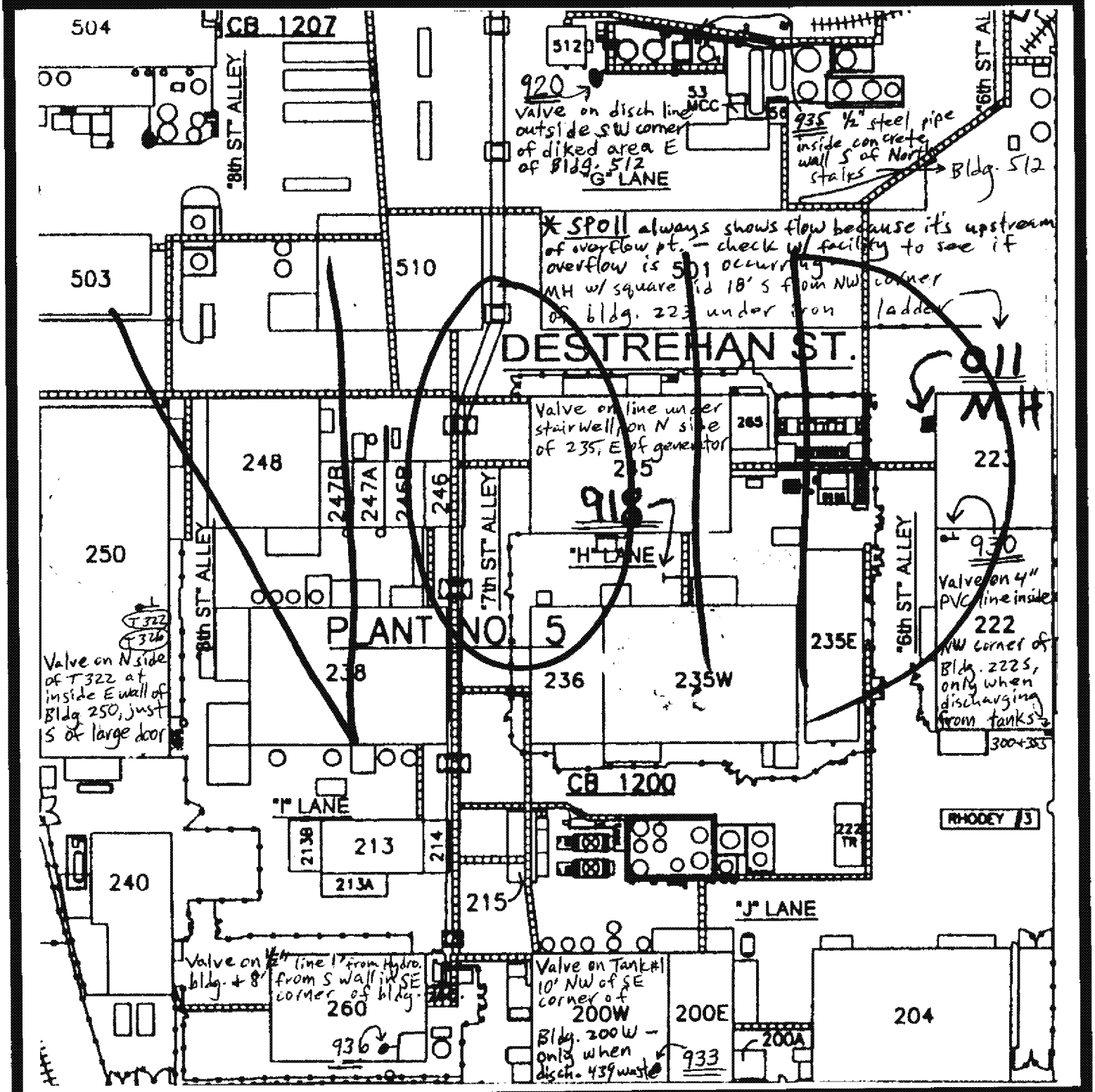

SP MAP DMM-1/95-2

MAP IS INVALID IF NOT DATED AND INITIALED OR IF VOID DATE IS FILLED IN

MSD-DEC INDUSTRY SAMPLING MAP

Company Name: MALLINCKRODT CHEMICAL, INC.

Premise Address: 3600 N. 2ND STREET

Zip Code: 63147

MSD Account No.: 21120596-00

Use this sheet only for page 2 and following pages.

This page is not valid unless a page 1 using the proper form is attached.

Map Effective Date: 12/13/06 By: JAG Map Revision Date: By:

Map Revision Date: 6/26/07 By: JAG DMM Map Void Date: 6/25/08 By: JAG

SP932:

VALVE 5' INSIDE N DIKE WALL 27' W FROM NE CORNER OF NEUTRALIZATION TANK FARM WALL

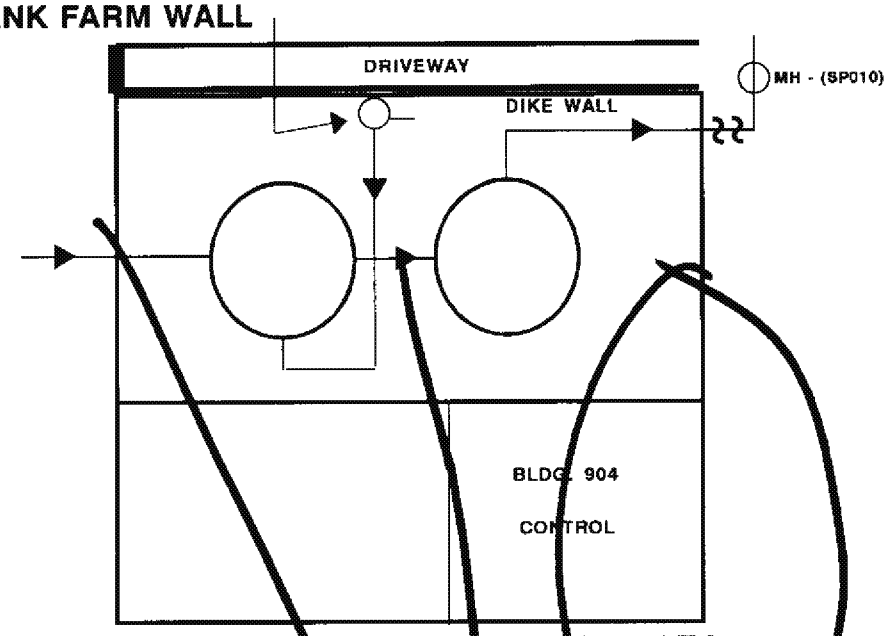

WASTEWATER TREATMENT AREA

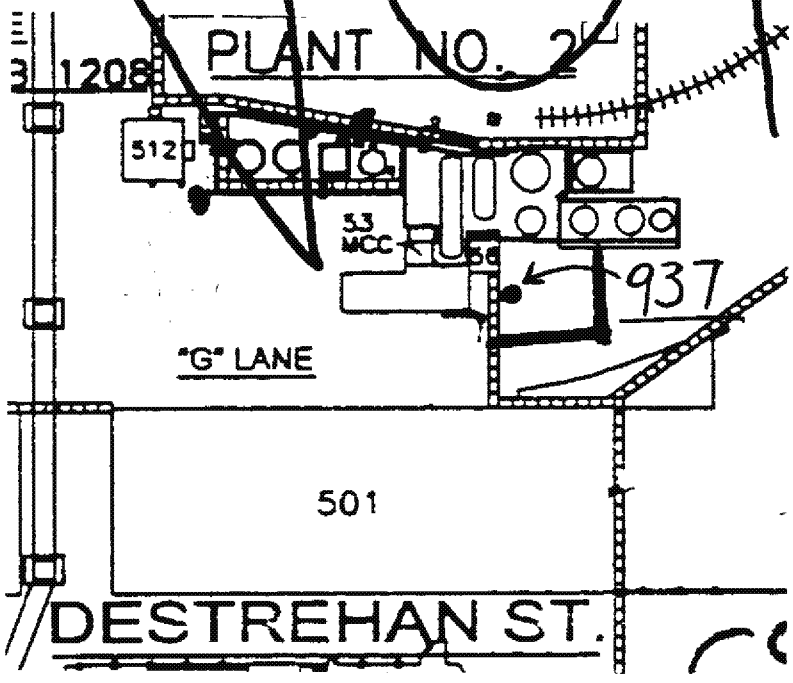

SP 937

Valve on 2nd level on West side near pipe bridge N of Bldg. 501

937

MAP IS INVALID IF NOT DATED AND INITIALED OR IF VOID DATE IS FILLED IN

Metropolitan St. Louis Sewer District

Division of Environmental Compliance
10 East Grand Avenue
St. Louis, MO 63147-2913
Phone: 314.768.6200 www.stlmsd.com

April 28, 2011

Amber Crouch
MALLINCKRODT
3600 North Second St.
St. Louis, MO 63147

Dear Ms. Crouch:

We have reviewed your application dated April 26, 2011 requesting approval to discharge 2,500 gallons of wastewater to the Metropolitan St. Louis Sewer District for treatment. This wastewater is from a failed batch of magnesium stearate solution from Building X at the Mallinckrodt facility located at 3600 North Second Street, St. Louis, Missouri. This wastewater is subject to the categorical pretreatment standards in 40 CFR Part 414 subparts G and H. We understand that the wastewater will be discharged through sampling point 010.

Based on the information and sample results you provided, this wastewater meets MSD Ordinance 12559 standards and is approved for discharge into a sanitary sewer on site. The discharge into the sewer must be controlled at a rate that will not surcharge the lines in the area. This approval is valid for 30 days from the date of this letter.

You must be certain the waste is discharged into a sanitary or combined sewer inlet only. This letter does not authorize any discharge to a separate storm sewer, or to any watercourse, as any such discharge would be in violation of state and federal laws. **Please notify me at the number below when the discharge is to commence, and please ensure the onsite personnel discharging the wastewater in question are provided with a copy of this letter.**

For billing purposes associated with this high strength wastewater, you must confirm the volume of this wastewater discharged to us, in writing, at the completion of the discharge. This report is due no later than 28 days after this approval expires. Please refer to this letter and include the date of the discharge when providing that figure. Under the provisions of Ordinance 13021, you will be billed by invoice at the billing rate in effect at the time of discharge. The current rate contained in MSD Ordinance 13021 is $2.02 per hundred cubic feet ($2.70 per thousand gallons), $298.36 per ton for COD over 600 mg/L, and $222.62 per ton for TSS over 300 mg/L. Using the assumed COD and TSS concentrations contained in a previously provided laboratory analytical report, and the proposed discharge volume provided in your application, it is estimated that you will be discharging just over 3 hundred cubic feet, less than one ton of COD over 600 mg/L (our quantitative estimate is 0.006 tons COD times $298.36), and less than one ton of TSS over 300 mg/L (our quantitative estimate is 0.16 tons TSS times $222.62). Please do not pay this amount until you receive our invoice.

This discharge has been approved based upon the information you provided, and is subject to the conditions stated above. This approval may be revoked by the District at any time if any of the information is found to be incorrect, or if the conditions of this approval are violated. Also, if the discharge causes any operational or maintenance problem within the District's collection or treatment system, or results in violations of any conditions of the District's NPDES permit, Mallinckrodt will be considered responsible for damages.

If you have any questions, please call me at (314) 436-8755.

Sincerely,
METROPOLITAN ST. LOUIS SEWER DISTRICT

Steven M. Grace

Steve Grace
Environmental Assistant Engineer

bv

pc: Brian Gibson
Doug Mendoza

File: IU, MALLINCKRODT INC [2112059600], SP834

C1A

SD EVALUATION CHECKLIST - ON SITE

APPLICATION INFORMATION

Source Name: Mallinckrodt Inc. Evaluated by: SMG

Premise Address: 3600 N. 2nd St. Date: 4/28/11

Send approval letter to applicant

Application Dated: 4/26/11 Received: 4/27/11 All Requested Info. Received: 4/28/11

SOURCE FILING/DESCRIPTION

1 - Source in PIMS? (Y) / N
2 - If No, on IU Cross-Ref list? * Y / N
3 - If No, MSD Account # from E-CIS? Y / N
4 - If none, on "Source" list (pre-IMS)? ** Y / N
5 - If No, assigned SOUR# from PIMS.

* o:\costrecovery\cross reference xls file

** o:\costrecovery\sourlist xls file

SOURCE TYPE (circle): (IU) / Dead IU / SD

INDUSTRY ID: 21120596-00

Sample Point: No. Assigned: 834 Description: failed batch of magnesium stearate soln. from Bldg. X

Normal WW flow from premise? N/A _____ ccf/month, 2,992,101 GPD, _____ GPH. from SP010

REGULATORY STATUS

Is waste a Hazardous Waste? (N) / Y

Categorical standards apply? N / (Y) 40 CFR 414, Subparts G & H

Contain PCB/ asbestos/ radioactive/ dioxin/ used oil? (N) / Y

Regulatory Agency Oversight? (N) / Y

DISCHARGE CONSIDERATIONS At MSD's connection:

Ordinance Limits (12559, p32) exceeded? (N) / Y

Ordinance other limits exceeded (dye, flash pt <140F, temp >140F, obstruction, nuisance foaming/odor, corrosion causing): (N) / Y

Water Quality Standard exceeded? (N) / Y

Fumes in sewer exceed PEL/TLV limits? (N) / Y

Vapors in sewer exceed 10% of LEL? (N) / Y

RECOMMENDATION: (APPROVE) / DENY (cc WWTP Mgr for timed discharge)

APPROVAL CONDITIONS:

Timed Discharge (COD/BOD/WQ/foam): (N) / Y Limit = _____ gal/hour

Require Treatment before Discharge? (N) / Y

Laboratory analysis fee due? (N) / Y $_____

SMR required? (N) / Y Frequency/analysis: _____

SMR log: (N/A) / Remediation.xls / Nonremediation.xls

Volume Billing applies (water unmetered or credited)? (N) / Y

Bill High Strength? N / (Y) Yes, If use >60,000 gal/month water ✓ and, > norm WW strgth

Surcharge calculation attached: N/A / N / (Y)

Expiration log updated: (N/A) / N / Y

O:\CostRecovery\Special Discharge\C1a.Checklist.doc

Steve Grace

From: Crouch, Amber [Amber.Crouch@Covidien.com]
Sent: Wednesday, April 27, 2011 9:13 PM
To: Steve Grace
Subject: RE: Mallinckrodt Special Discharge - Magnesium Stearate

Yes, the characteristics of this failed batch are the same as the January 2011 failed batch.

Thanks,
Amber Crouch
Senior HSE Engineer
Covidien
3600 North Second Street
St. Louis, MO 63147
USA
(314) 654-0127 office
(314) 253-2213 pager
(314) 654-1251 fax
www.covidien.com
This information may be confidential and/or privileged. Use of this information by anyone other than the intended recipient is prohibited. If you receive this in error, please inform the sender and remove any record of this message.

From: Steve Grace [mailto:sgrace@stlmsd.com]
Sent: Wednesday, April 27, 2011 5:07 PM
To: Crouch, Amber
Subject: RE: Mallinckrodt Special Discharge - Magnesium Stearate

Hello Amber,

In reviewing the file, it looks like we had you guys run COD and TSS lab analysis on the January 2011 failed batch of magnesium stearate. As this lab analytical was not provided for this failed batch, can you confirm that the characteristics of this failed batch are the same as the January 2011 failed batch?

Contact me with any questions or if you require additional information.

Thanks,
Steve Grace

From: Crouch, Amber [mailto:Amber.Crouch@Covidien.com]
Sent: Wednesday, April 27, 2011 11:05 AM
To: Steve Grace
Subject: Mallinckrodt Special Discharge - Magnesium Stearate

Steve,

I was just following up on the special discharge application I sent yesterday. Let me know if you have any questions. If possible we would like to discharge the material today.

Thanks,

Amber Crouch

Senior HSE Engineer

Covidien

3600 North Second Street

St. Louis, MO 63147

USA

(314) 654-0127 office

(314) 253-2213 pager

(314) 654-1251 fax

www.covidien.com

This information may be confidential and/or privileged. Use of this information by anyone other than the intended recipient is prohibited. If you receive this in error, please inform the sender and remove any record of this message.

On-Site Special Discharge High Strength Flow Rate and Surcharge Calculator

1 GENERAL INFORMATION:

Date: 04/28/11
Calculated by: Steve Grace
Source name: MALLINCKRODT INC
Waste material: Off-specification magnesium stearate
Discharge volume: 2,500 gallons

2 STRENGTH INFORMATION:

Sample BOD =	0	mg/l =	0	lbs BOD to be discharged
Sample COD =	1,170	mg/l =	24	lbs COD to be discharged
Sample TSS =	15,500	mg/l =	for surcharge calculation only	

3 PLANT DATA: 2010

Treatment area: Bissell

	Flow (MGD)	BOD (mg/L)	COD (mg/L)	BOD (lb/hr)	COD (lb/hr)	Max Loading = 10% BOD (lb/hr)	COD (lb/hr)
Bissell	**140**	**146**	**292**	**7,113**	**14,227**	**711**	**1,423**
Coldwater	26	188	377	1,704	3,408	170	341
Fenton	5	388	776	679	1,357	68	136
Grand Glaize	16	129	405	708	2,218	71	222
Lemay	131	78	210	3,531	9,584	353	958
Lower Meramec	13	124	409	543	1,785	54	179
Missouri River	27	280	559	2,671	5,341	267	534

4 MINIMUM REQUIRED FLOW RATE:

	BOD (hours	BOD (gpm)	COD (hours)	COD (gpm)
Bissell	**0.00**	**0**	**0.02**	**2430**
Coldwater	0.00	0	0.07	582
Fenton	0.00	0	0.18	232
Grand Glaize	0.00	0	0.11	379
Lemay	0.00	0	0.03	1637
Lower Meramec	0.00	0	0.14	305
Missouri River	0.00	0	0.05	912

5 SURCHARGE AND VOLUME BILLING

Is volume subject to billing? no (yes/no)
Ratio of BOD/COD = 0.00

(Sample BOD) - 300 = 0 mg/l subject to surcharge
(sample COD) - 600 = 570 mg/l subject to surcharge
(sample TSS) - 300 = 15200 mg/l subject to surcharge

If BOD/COD ratio <= 0.35, the following calculations use the COD value. Otherwise they use the BOD value

Current rates under Ordinance: 13021

Volume =	$ 2.02	/CcF
BOD =	$ 596.72	/ton
COD =	$ 298.36	/ton
TSS =	$ 222.62	/ton

Flow charge =	$ -	based on volume = 3.3 CcF
BOD surcharge =	$ -	
COD surcharge =	$ 1.77	
TSS surcharge =	$ 35.29	
Total discharge charge =	$ 37.06	
Customer charge =	**$ 37.06**	DEC charges special discharge customers for total charges > $20.00
Approximate charge/gallon =	$ 0.01	

Comments

require volume report for billing purposes. Smg

COVIDIEN

Facsimile Communication

To: Mr. Steve Grace

Company: MSD Environmental Compliance

Fax Number: 314.436.8766

Date: April 26, 2011

Number of Pages *(including cover sheet)*: 8

Health, Safety, Environmental

Amber Crouch
Senior HSE Engineer

Covidien/Mallinckrodt
3600 N. Second St.
St. Louis, Missouri 63147

Telephone 314-654-0127
Facsimile 314-654-1251

- ☐ For your information
- X Please respond
- X Urgent
- ☐ Confidential

Comments:

Dear Mr. Grace,

Attached please find an application for the Special Discharge of a 27% magnesium stearate and water solution from Building X. A similar Special Discharge request was approved by your office on January 26, 2011.

We would like to discharge this material tomorrow 4/27/2011 if at all possible. If you have any questions or need additional information, please contact me.

Thank you,

Amber Crouch

Amber Crouch

Metropolitan St. Louis Sewer District
2350 Market Street
St. Louis, MO 63103

APPLICATION FOR SPECIAL DISCHARGE APPROVAL

I. WASTEWATER SOURCE IDENTIFICATION:

Site Name: Mallinckrodt
Premise Address: 3600 N. 2nd St.
City: St. Louis State: MO Zip: 63147
Owner: Mallinckrodt
Contact Person: Amber Crouch
Title: Sr. HSE Engineer
Phone: 314-654-0127 Fax: 314-654-1251

II. APPLICANT (mailing information):

Applicant Name: Amber Crouch
Title: Sr. HSE Engineer
Company Name: Mallinckrodt
Mailing Address: 3600 N. 2nd St.
City: St. Louis State: MO Zip: 63147
Phone: 314-654-0127 Fax: 314-654-1251

III. A. MATERIAL TO BE DISCHARGED (check all applicable boxes):

1. Wastewater description/location: Failed batch of Magnesium Stearate in Bld. X
2. Process/activity generating wastewater: Failed batch of Magnesium Stearate solution
   pH of 8.2
3. Physical and chemical composition: List all constituents, and known or potentially present regulated contaminants below.
   ☐ See separate listing enclosed, and/or ☐ See analytical results enclosed, and/or ☑ Material Safety Data Sheet enclosed.

DESCRIPTION	RANGE	UNIT
water	63	%
Magnesium Stearate	27	%

DESCRIPTION *(continued)*	RANGE	UNIT

4. Is this wastewater from a process subject to EPA's categorical standards in 40 CFR Subchapter N? ☑ Yes ☐ No
   a. If yes, the applicable standards are in: 40 CFR Part 414, Subpart G+H ☑ Existing source ☐ New source
5. Does this wastewater contain polychlorinated biphenyls, asbestos or radioactive material? ☐ Yes ☑ No
   a. If yes, describe: _____
6. Representative sample: ☐ Laboratory results attached, and/or ☐ Sample provided (1/2 gallon minimum, clear container)
   a. Sample collection point/location: _____ Collection method: _____
   b. Sampler's name/Co.: _____ Sample date/time: _____
   c. Attach chain of custody as available
7. Discharge will occur over the following time period: ☑ < 30 days ☐ ≥ Two years ☐ Other: _____
   a. Expected total volume of wastewater to be discharged over the time period above: _____ Gallons
   b. Proposed discharge volume: 2500 Gallons, at a frequency of: ☑ One time ☐ Daily ☐ Weekly ☐ Monthly ☐ Once/three months ☐ Once/six months ☐ Other: _____
8. Pretreatment of wastewater prior to discharge: ☐ None ☑ Yes, describe: pH adjust at Main outfall SP 010
   a. If yes, attach site plan, pretreatment system schematic, and design specifications.
9. Wastewater from a remediation project under: ☐ Superfund/CERCLA ☐ RCRA ☐ Voluntary program ☐ UST ☑ Not applicable
   a. If from a remediation project, briefly describe the past and present utilization of the property: _____

III.B. MATERIAL FROM UNDERGROUND STORAGE TANK SOURCE

☑ **Not applicable (go to Section IV)**

Please answer the following questions if you are requesting to discharge wastewater associated with an underground storage tank system.

1. a. Wastewater from: ☐ Inside UST(s) ☐ UST system pit ☐ Excavation outside UST system pit ☐ Monitoring well ☐ Groundwater remediation system

   b. UST project involves wastewater from: ☐ UST(s) closed in place ☐ UST(s) removed ☐ Remediation ☐ Upgrade ☐ Maintenance activities ☐ Well monitoring ☐ Other, explain: _____

   c. If wastewater is from a closure project, how long has UST(s) been out of service: _____ years

2. a. State assigned UST site identification number: _____ ☐ Not applicable

   b. Number of USTs affected: _____ ☐ Unknown

   c. For the UST(s) involved, their state identification number(s): _____ ☐ Not applicable

   d. Service Station Identification Number, as applicable: _____

3. Tank contents/former contents: ☐ Gasoline ☐ #2 diesel ☐ Used oil ☐ Unknown ☐ Other: _____

IV. DISCHARGE LOCATION

1. ☑ On-site. Describe proposed point of entry to sewer and the discharge rate (must be a sanitary or combined sewer): _____

   Bldg. X sewer to Main outfall SP010 Note: Range of discharge must not surcharge sewer line.

2. ☐ Haul to MSD Bissell Point Hauled Waste Receiving Station at 10 E. Grand, St. Louis, MO.

   a. Transporters Name: _____ and MSD Hauler ID Number: _____

   b. Hazardous Waste Certification:

   For wastewater which is hauled to MSD's Bissell Point Hauled Waste Receiving Station, I hereby certify that to the best of my knowledge and belief, the above hauled waste is not classified as a RCRA "hazardous waste" as defined by the MDNR in 10 CSR 25 or USEPA in 40 CFR Part 261.

   Applicant Name (print): _____

   Signature: _____ **Date:** _____

ADDITIONAL INFORMATION:

_____

V. APPLICANT SIGNATURE AND CERTIFICATION

This application must be signed by the applicant: either the source contact, or a contractor or agent directly responsible for site activities.

I hereby certify that I am directly responsible for activities at the site regarding the wastewater to be discharged, and to the best of my knowledge and belief, based on appropriate inquiry, the information in this application is true, complete, and accurate. The samples or analyses submitted are representative of the materials to be discharged. If granted approval to discharge, I agree to abide by the MSD Ordinances, and all applicable federal, state and local regulations. I agree to pay the costs of any pre-approval analyses performed by MSD and to pay any applicable disposal charges for the volume and strength of the wastes discharged.

Applicant Name (print): Amber Crouch

Signature: Amber Crouch **Date:** 4/26/11

FOR MSD USE ONLY:

File Name: Mallinckrodt Inc. ID No. 21120596-00 Sample Point No. 834

COVIDIEN
Mallinckrodt

MATERIAL SAFETY DATA SHEET

1. Product and Company Identification

Material name	MAGNESIUM STEARATE
Version #	02
Revision date	12-04-2009
CAS #	557-04-0
Product Codes	Mallinckrodt: 1257, 1277, 1726, 1729, 2254, 2255, 2256, 2257, 2279, 2800, 3508, 4024, 4217, 5705, 5712, 5716, 5774, 5777, 6504, 7205, 7807
Synonym(s)	STEARIC ACID, MAGNESIUM SALT * Octadecanoic acid, magnesium salt
Manufacturer	Covidien (Mallinckrodt)
Address	675 McDonnell Blvd. Hazelwood MO 63042
Customer Service	888-744-1414
24 Hour Emergency	314-654-1600
Chemtrec	800-424-9300
Supplier	24 Hour Emergency 314-654-1600 Chemtrec 800-424-9300 Customer Service 888-744-1414

2. Hazards Identification

Emergency overview	WARNING Dust may form explosive mixture with air. Exposure to powder or dusts may be irritating to eyes, nose and throat.
Potential health effects	
Routes of exposure	Inhalation.
Eyes	Contact with eyes may cause irritation. Dust or powder may irritate eye tissue.
Skin	Health injuries are not known or expected under normal use.
Inhalation	Inhalation of dusts may cause respiratory irritation. Coughing. Difficulty in breathing.
Ingestion	Health injuries are not known or expected under normal use.
Chronic effects	Inhalation of powder/dust may cause lung edema.
Potential environmental effects	Ecological injuries are not known or expected under normal use.

3. Composition / Information on Ingredients

Components	CAS #	Percent
MAGNESIUM STEARATE	557-04-0	100

4. First Aid Measures

First aid procedures	
Eye contact	Rinse with water. Get medical attention if irritation develops and persists.
Skin contact	Rinse skin with water/shower. Get medical attention if irritation develops and persists.
Inhalation	If gas/fume/vapor/dust/mist from the material is inhaled, remove the affected person immediately to fresh air. Call a physician if symptoms develop or persist.
Ingestion	Rinse mouth. If ingestion of a large amount does occur, call a poison control center immediately.
General advice	If you feel unwell, seek medical advice (show the label where possible). Show this safety data sheet to the doctor in attendance.

5. Fire Fighting Measures

Flammable properties	Dust may form explosive mixture with air.
Extinguishing media	
Suitable extinguishing media	Water.
Protection of firefighters	
Protective equipment for firefighters	As in any fire, wear self-contained breathing apparatus pressure-demand, MSHA/NIOSH (approved or equivalent) and full protective gear.
Special protective equipment for fire-fighters	As in any fire, wear self-contained breathing apparatus pressure-demand, MSHA/NIOSH (approved or equivalent) and full protective gear.
Specific methods	In the event of fire, cool tanks with water spray. Use water spray to cool unopened containers.

6. Accidental Release Measures

Personal precautions	Ventilate the area. Avoid inhalation of dust from the spilled material. Wear a dust mask if dust is generated above exposure limits.
Methods for containment	If sweeping of a contaminated area is necessary use a dust suppressant agent which does not react with the product.
Methods for cleaning up	Sweep up or vacuum up spillage and collect in suitable container for disposal. Avoid dust formation. Collect dust using a vacuum cleaner equipped with HEPA filter. Following product recovery, flush area with water.

7. Handling and Storage

Handling	Keep formation of airborne dusts to a minimum. Provide appropriate exhaust ventilation at places where dust is formed. Ground container and transfer equipment to eliminate static electric sparks. Use explosion-proof ventilation equipment. Do not breathe dust. Avoid contact with eyes. In case of insufficient ventilation, wear suitable respiratory equipment. Dust may form explosive mixture with air.
Storage	Store in a well-ventilated place. Keep container tightly closed. Keep at temperature not exceeding 40°C. Guard against dust accumulation of this material. Containers of this material may be hazardous when empty since they retain product residues (dust, solids); observe all warnings and precautions listed for the product.

8. Exposure Controls / Personal Protection

Occupational exposure limits

Canada - British Columbia

Material	Type	Value
MAGNESIUM STEARATE (557-04-0)	TWA	10.0000 mg/m3

Canada - Ontario

Material	Type	Value	Form
MAGNESIUM STEARATE (557-04-0)	TWA	10.0000 mg/m3	Total dust.

Engineering controls	Ventilation should be sufficient to effectively remove and prevent buildup of any dusts or fumes that may be generated during handling or thermal processing. If material is ground, cut, or used in any operation which may generate dusts, use appropriate local exhaust ventilation to keep exposures below the recommended exposure limits.
Personal protective equipment	
Eye / face protection	Use tight fitting goggles if dust is generated. Provide eyewash station and safety shower.
Skin protection	No special protective equipment required.
Respiratory protection	Wear respirator with dust filter.

9. Physical & Chemical Properties

Appearance	Powder.

Color	White or Yellow.
Odor	Slight.
Odor threshold	Not available.
Physical state	Solid.
Form	Powder.
pH	Not available.
Melting point	302 - 338 °F (150 - 170 °C)
Freezing point	Not available.
Boiling point	Not available.
Flash point	Not available.
Evaporation rate	Not available.
Flammability limits in air, upper, % by volume	Not available.
Flammability limits in air, lower, % by volume	Not available.
Vapor pressure	< -0.0001 kPa at 25°C
Vapor density	Not available.
Specific gravity	1.028
Relative density	Not available.
Solubility (water)	Insoluble in water.
Partition coefficient (n-octanol/water)	Not available
Auto-ignition temperature	Not available.
Decomposition temperature	Not available.
Molecular weight	591.27 g/mol
Molecular formula	Mg(C18H35O2)2
Dust Electrostatic Properties	
Minimum Ignition Energy (Cloud)	50 - 100 mJ
Dust Explosion Properties	
dP/dT	934 bar/s
Kst	254 bar.m/s
Limiting Oxygen Concentration	12 - 13 %
Minimum Explosible Concentration	20 - 30 g/m3
Minimum Ignition Temperature-Cloud	824 - 860 °F (440 - 460 °C)
Minimum Ignition Temperature-Layer	716 - 734 °F (380 - 390 °C)
Pmax	8.8 bar

10. Chemical Stability & Reactivity Information

Conditions to avoid	Dust clouds may be explosive under certain conditions.
Incompatible materials	Strong oxidizing agents. Acids.
Hazardous decomposition products	Carbon monoxide. May include oxides of magnesium.

11. Toxicological Information

Sensitization	Not available.
Local effects	Inhalation of dusts may cause respiratory irritation.
Chronic effects	Not expected to be hazardous by WHMIS criteria. Lung edema.
Carcinogenicity	Not available.
Mutagenicity	Not available.
Reproductive effects	Not available.
Teratogenicity	Not available.

12. Ecological Information

Ecotoxicity	This product has no known eco-toxicological effects.
Persistence and degradability	Not available.

13. Disposal Considerations

Disposal instructions	This product, in its present state, when discarded or disposed of, is not a hazardous waste according to Federal regulations (40 CFR 261.4 (b)(4)). Under RCRA, it is the responsibility of the user of the product to determine, at the time of disposal, whether the product meets RCRA criteria for hazardous waste.

14. Transport Information

TDG

Not regulated as dangerous goods.

15. Regulatory Information

Canadian regulations	This product has been classified in accordance with the hazard criteria of the CPR and the MSDS contains all the information required by the CPR.
WHMIS status	Non-controlled

Inventory status

Country(s) or region	Inventory name	On inventory (yes/no)*
Australia	Australian Inventory of Chemical Substances (AICS)	Yes
Canada	Domestic Substances List (DSL)	Yes
Canada	Non-Domestic Substances List (NDSL)	No
China	Inventory of Existing Chemical Substances in China (IECSC)	Yes
Europe	European Inventory of Existing Commercial Chemical Substances (EINECS)	Yes
Europe	European List of Notified Chemical Substances (ELINCS)	No
Japan	Inventory of Existing and New Chemical Substances (ENCS)	Yes
Korea	Existing Chemicals List (ECL)	Yes
New Zealand	New Zealand Inventory	Yes
Philippines	Philippine Inventory of Chemicals and Chemical Substances (PICCS)	Yes
United States & Puerto Rico	Toxic Substances Control Act (TSCA) Inventory	Yes

*A "Yes" indicates that all components of this product comply with the inventory requirements administered by the governing country(s)

Saf-T-Data	Health: 1 - Slight Flammability: 2 - Moderate Reactivity: 1 - Slight Contact: 1 - Slight Lab Protective Equip: B - GOGGLES; LAB COAT; VENT HOOD; PROPER GLOVES Storage Color Code: G - Green (General Storage)

16. Other Information

NFPA ratings	Health: 0 Flammability: 1 Instability: 0
Disclaimer	Mallinckrodt Baker, Inc. provides the information contained herein in good faith but makes no representation as to its comprehensiveness or accuracy. This document is intended only as a guide to the appropriate precautionary handling of the material by a properly trained person using this product. Individuals receiving the information must exercise their independent judgment in determining its appropriateness for a particular purpose. MALLINCKRODT BAKER, INC. MAKES NO REPRESENTATIONS OR WARRANTIES, EITHER EXPRESS OR IMPLIED, INCLUDING WITHOUT LIMITATION ANY WARRANTIES OF MERCHANTABILITY, FITNESS FOR A PARTICULAR PURPOSE WITH RESPECT TO THE INFORMATION SET FORTH HEREIN OR THE PRODUCT TO WHICH THE INFORMATION REFERS. ACCORDINGLY, MALLINCKRODT BAKER, INC. WILL NOT BE RESPONSIBLE FOR DAMAGES RESULTING FROM USE OF OR RELIANCE UPON THIS INFORMATION.
Issue date	12-04-2009
This data sheet contains changes from the previous version in section(s):	Product and Company Identification: Product and Company Identification

Mallinckrodt Inc.
21120596-00 SP850

Steve Grace

From: Steve Grace
Sent: Wednesday, April 27, 2011 11:52 AM
To: 'Summers, Julie'
Cc: Burke, Karen
Subject: RE: CT Excavation Discharge #5

Hello Julie,

A review of the laboratory analytical data for Discharge 005 from the C-T Phase II decommissioning activities indicated this batch meets MSD Ordinance 12559 standards along with those outlined in 10 CFR Part 20, Appendix B, Table 3, and is approved for discharge into a combined sewer identified on MSD's base map as Inlet 18D1-395C. As a general reminder, the discharge into the sewer must be controlled at a rate that will not surcharge the lines in that area. In addition, the volume of this batch of wastewater must be confirmed in writing no later than 28 days after the date of this discharge. The approval for Discharge 005 is valid for 30 days from the date of this email.

Please contact me should you have any questions or require additional information.

Thank you,
Steve Grace

From: Summers, Julie [mailto:Julie.Summers@Covidien.com]
Sent: Wednesday, April 27, 2011 9:24 AM
To: Steve Grace
Cc: Burke, Karen
Subject: CT Excavation Discharge #5

Steve,

Mallinckrodt requests permission to discharge 40,000 gallons of treated rainwater and groundwater collected as part of the C-T Phase II decommissioning activities. The wastewater discharge will be identified as Discharge 005. The laboratory analytical results demonstrate that the discharge will comply with the requirements of the Metropolitan St. Louis Sewer District as set forth in their letter to Lisa Meyer dated January 21, 2011. In addition, the discharge meets the monthly average concentrations for release to sanitary sewers per the requirements of 10 CFR 20.2003. Both a discharge summary and the detailed laboratory analytical results are attached for your information.

Thanks,
Julie Summers
Environmental Manager
Covidien/Mallinckrodt
3600 North 2nd Street
St. Louis, MO 63147
314-654-1969 Phone
314-654-1251 Fax

Wastewater Discharge 005 - Analytical Results Summary

Sample ID: 60162412-SMP-PL5-WW-OTH-0615

Analyte	Units	Limit	Concentration	Qualifiers[1]
VOCs				
Acrolein	mg/L		< 0.01	U
Acrylonitrile	mg/L		< 0.01	U
Benzene	mg/L		< 0.001	U
Bromoform	mg/L		< 0.001	U
Bromomethane	mg/L		< 0.002	U
Carbon tetrachloride	mg/L		< 0.001	U
Chlorobenzene	mg/L		< 0.001	U
Chlorodibromomethane	mg/L		< 0.001	U
Chloroethane	mg/L		< 0.002	U
Chloroform	mg/L		< 0.001	U
Chloromethane	mg/L		< 0.002	U
Dichlorobromomethane	mg/L		< 0.001	U
1,1- Dichloroethane	mg/L		< 0.001	U
1,2- Dichloroethane	mg/L		< 0.001	U
1,1- Dichloroethene	mg/L		< 0.001	U
1,2- Dichloroethane	mg/L		< 0.002	U
1,2- Dichloropropane	mg/L		< 0.001	U
cis-1,3-Dichloropropene	mg/L		< 0.001	U
trans-1,3-Dichloropropene	mg/L		< 0.001	U
Ethylbenzene	mg/L		< 0.001	U
Methylene Chloride	mg/L		< 0.001	U
1,1,2,2-Tetrachloroethane	mg/L		< 0.001	U
Tetra chloroethene	mg/L		< 0.001	U
Toluene	mg/L		< 0.001	U
1,1,1- Trichloroethane	mg/L		< 0.001	U
1,1,2- Trichloroethane	mg/L		< 0.001	U
Trichloroethene	mg/L		< 0.001	U
Vinyl Chloride	mg/L		< 0.002	U
Total Toxic Organics	*mg/L*	*5.844*	*< 0.051*	
Metals				
Cadmium	mg/L	0.7	< 0.005	U
Chromium	mg/L	5	< 0.01	U
Copper	mg/L	2.7	0.0069	J
Iron	mg/L	150	0.414	
Nickel	mg/L	2.3	0.0389	J
Lead	mg/L	0.4	0.0045	J
Zinc	mg/L	3	0.399	

Analyte	Units	Limit	Concentration	Qualifiers[1]
General Chemistry				
pH		5.5-11.5	7	
COD	mg/L	600	28	
TSS	mg/L	300	2	J
Radionuclides				
Gross Alpha	pCi/L	3,000	< 5	U
Gross Beta	pCi/L	50	20.3	
Ra-226	pCi/L	10	0.41	J
Ra-228	pCi/L	30	0.43	J
Th-228	pCi/L	2,000	< 0.5	U
Th-230	pCi/L	1,000	< 0.39	U
Th-232	pCi/L	300	< 0.33	U
U-234	pCi/L		< 0.25	U
U-235/6	pCi/L		< 0.34	U
U-238	pCi/L		< 0.27	U
Total Uranium	*pCi/L*	*3,000*	*< 0.86*	

10 CFR 20 Appendix B Table 3 Values

Analyte	Units	Limit	Discharge Concentration	Averaged Concentration
Ra-226	pCi/L	0.6	0.41	0.001
Ra-228	pCi/L	0.6	0.43	0.001
Th-228	pCi/L	2	0.5	0.001
Th-230	pCi/L	1	0.39	0.001
Th-232	pCi/L	0.3	0.33	0.001
U-234	pCi/L	3	0.25	0.001
U-235/6	pCi/L	3	0.34	0.001
U-238	pCi/L	3	0.27	0.001
Sum of Fractions	*pCi/L*	*1*	*n/a*	*0.009*

Discharge Volume (gals) = 40,000

Covidien averaging factor[2] = 0.002

Analyte	Units	Annual Limit	Discharge Activity	Year to Date Activity
Gross Radioactivity	Ci	1	3.8E-06	9.1E-06

Notes:

(1) 'J' indicates estimated value; 'U' indicates result less than sample detection limit; 'E' indicates matrix interference

(2) derived from discharge volume divided by a Covidien minimum average monthly volume (20,000,000 gal)

TestAmerica

THE LEADER IN ENVIRONMENTAL TESTING

TestAmerica Laboratories, Inc.

ANALYTICAL REPORT

Mallinckrodt St. Louis Plant

Lot #: F1D190549

Mark Tepperman

AECOM Technical Services Inc.
8005 Outer Circle Road
Brooks Air Force Bas, TX 78235

TESTAMERICA LABORATORIES, INC.

Jayna Awalt
Project Manager

April 26, 2011

Case Narrative
LOT NUMBER: **F1D190549**

This report contains the analytical results for the two samples received under chain of custody by TestAmerica St. Louis on April 19, 2011. These samples are associated with your Mallinckrodt St. Louis Plant project.

The analytical results included in this report meet all applicable quality control procedure requirements. except as noted in the following case narrative.

The test results in this report meet all NELAP requirements for parameters in which accreditations are held by TestAmerica St. Louis. Any exceptions to NELAP requirements are noted in the case narrative. **TestAmerica St. Louis' Florida certification number is E87689.** The case narrative is an integral part of this report.

This report shall not be reproduced, except in full, without the written approval of the laboratory.

All chemical analysis results are based upon sample as received, wet weight, unless noted otherwise. All radiochemistry results are based upon sample as dried and ground with the exception of tritium, unless requested wet weight by the client.

Observations/Nonconformances
Reference the chain of custody and condition upon receipt report for any variations on receipt conditions and temperature of samples on receipt.

Total Metals Method 6010B
Batch: 1110117

The serial dilution for Zinc is outside of method acceptance criteria indicating potential matrix interference. All associated samples are flagged accordingly with an "E" flag.
Affected Samples:
F1D190549 (1): 60162412-SMP-PL5-WW-OTH-0615

COD Method 410.4
Batch: 1112102

The Matrix Spike recovery was outside the method QC limits of 90%-110%. In accordance with the method (section 9.4.3), if the LCS is within 90%-110%, the laboratory performance is shown to be in control. The recovery problem encountered is judged to be either matrix or solution related and not system related. The LCS recovered at 95.8%.
Affected Samples:
F1D190549 (1): 60162412-SMP-PL5-WW-OTH-0615

Radium 228 Method 904 MOD
Batch: 1110364

The Sample Duplicate %RPD > 40% and RER >1.0 for Radium 228. The sample activity is greater than the MDA but less than the reporting limit of 1pCi/L. The sample duplicate is less than the MDA and reporting limit. The data is reported with this narrative per client request.
Affected Samples:
F1D190549 (1): 60162412-SMP-PL5-WW-OTH-0615

Gross Alpha/Beta Method 900 MOD
Batch: 1109270

The Gross Alpha and/or Beta reporting limit was not met due to a reduction of sample size attributed to the sample's high residual mass. The analytical results are reported.
Affected Samples:
F1D190549 (1): 60162412-SMP-PL5-WW-OTH-0615

There are no other observations or non-conformances associated with the analyses contained in this report.

METHODS SUMMARY

F1D190549

PARAMETER	ANALYTICAL METHOD	PREPARATION METHOD
pH Aqueous	SW846 9040	SW846 9040
Chemical Oxygen Demand	MCAWW 410.4	MCAWW 410.4
Gross Alpha/Beta EPA 900	EPA 900.0 MOD	EPA 900.0
Isotopic Thorium by Alpha Spectroscopy	EML A-01-R MOD	
Isotopic Uranium by Alpha Spectroscopy	EML A-01-R MOD	
Non-Filterable Residue (TSS)	MCAWW 160.2	MCAWW 160.2
Purgeables	CFR136A 624	SW846 5030B
Radium-226 by GFPC	EPA 903.0 MOD	
Radium-228 by GFPC	EPA 904 MOD	
Trace Inductively Coupled Plasma (ICP) Metals	SW846 6010B	

References:

CFR136A "Methods for Organic Chemical Analysis of Municipal and Industrial Wastewater", 40CFR, Part 136, Appendix A, October 26, 1984 and subsequent revisions.

EML "ENVIRONMENTAL MEASUREMENTS LABORATORY PROCEDURES MANUAL" HASL-300 28TH EDITION, VOLUME I and II DEPARTMENT OF ENERGY

EPA "EASTERN ENVIRONMENTAL RADIATION FACILITY RADIOCHEMISTRY PROCEDURES MANUAL" US EPA EPA 520/5-84-006 AUGUST 1984

MCAWW "Methods for Chemical Analysis of Water and Wastes", EPA-600/4-79-020, March 1983 and subsequent revisions.

SW846 "Test Methods for Evaluating Solid Waste, Physical/Chemical Methods", Third Edition, November 1986 and its updates.

SAMPLE SUMMARY

F1D190549

WO #	SAMPLE#	CLIENT SAMPLE ID	SAMPLED DATE	SAMP TIME
MG70P	001	60162412-SMP-PL5-WW-OTH-0615	04/19/11	12:30
MG72P	002	VOC BLANK	04/19/11	

NOTE(S):

- The analytical results of the samples listed above are presented on the following pages.
- All calculations are performed before rounding to avoid round-off errors in calculated results.
- Results noted as "ND" were not detected at or above the stated limit.
- This report must not be reproduced, except in full, without the written approval of the laboratory.
- Results for the following parameters are never reported on a dry weight basis: color, corrosivity, density, flashpoint, ignitability, layers, odor, paint filter test, pH, porosity pressure, reactivity, redox potential, specific gravity, spot tests, solids, solubility, temperature, viscosity, and weight.

AECOM Technical Services Inc.

Client Sample ID: 60162412-SMP-PL5-WW-OTH-0615

GC/MS Volatiles

Lot-Sample #...: F1D190549-001 Work Order #...: MG70P1AK Matrix.....: WATER
Date Sampled...: 04/19/11 12:30 Date Received..: 04/19/11
Prep Date.....: 04/21/11 Analysis Date..: 04/22/11
Prep Batch #...: 1115103 Analysis Time..: 06:57
Dilution Factor: 1
Method.....: CFR136A 624

PARAMETER	RESULT	REPORTING LIMIT	UNITS
Acrolein	ND	10	ug/L
Acrylonitrile	ND	10	ug/L
Benzene	ND	1.0	ug/L
Bromoform	ND	1.0	ug/L
Bromomethane	ND	2.0	ug/L
Carbon tetrachloride	ND	1.0	ug/L
Chlorobenzene	ND	1.0	ug/L
Chlorodibromomethane	ND	1.0	ug/L
Chloroethane	ND	2.0	ug/L
Chloroform	ND	1.0	ug/L
Chloromethane	ND	2.0	ug/L
Dichlorobromomethane	ND	1.0	ug/L
1,1-Dichloroethane	ND	1.0	ug/L
1,2-Dichloroethane	ND	1.0	ug/L
1,1-Dichloroethene	ND	1.0	ug/L
1,2-Dichloroethene (total)	ND	2.0	ug/L
1,2-Dichloropropane	ND	1.0	ug/L
cis-1,3-Dichloropropene	ND	1.0	ug/L
trans-1,3-Dichloropropene	ND	1.0	ug/L
Ethylbenzene	ND	1.0	ug/L
Methylene chloride	ND	1.0	ug/L
1,1,2,2-Tetrachloroethane	ND	1.0	ug/L
Tetrachloroethene	ND	1.0	ug/L
Toluene	ND	1.0	ug/L
1,1,1-Trichloroethane	ND	1.0	ug/L
1,1,2-Trichloroethane	ND	1.0	ug/L
Trichloroethene	ND	1.0	ug/L
Vinyl chloride	ND	2.0	ug/L

SURROGATE	PERCENT RECOVERY	RECOVERY LIMITS
1,2-Dichloroethane-d4	86	(62 - 122)
Toluene-d8	96	(73 - 116)
4-Bromofluorobenzene	93	(68 - 118)

AECOM Technical Services Inc.

Client Sample ID: VOC BLANK

GC/MS Volatiles

Lot-Sample #...: F1D190549-002 **Work Order #...:** MG72P1AA **Matrix.....:** WATER
Date Sampled...: 04/19/11 **Date Received..:** 04/19/11
Prep Date.....: 04/21/11 **Analysis Date..:** 04/22/11
Prep Batch #...: 1115103 **Analysis Time..:** 06:33
Dilution Factor: 1

Method.....: CFR136A 624

PARAMETER	RESULT	REPORTING LIMIT	UNITS
Acrolein	ND	10	ug/L
Acrylonitrile	ND	10	ug/L
Benzene	ND	1.0	ug/L
Bromoform	ND	1.0	ug/L
Bromomethane	ND	2.0	ug/L
Carbon tetrachloride	ND	1.0	ug/L
Chlorobenzene	ND	1.0	ug/L
Chlorodibromomethane	ND	1.0	ug/L
Chloroethane	ND	2.0	ug/L
Chloroform	ND	1.0	ug/L
Chloromethane	ND	2.0	ug/L
Dichlorobromomethane	ND	1.0	ug/L
1,1-Dichloroethane	ND	1.0	ug/L
1,2-Dichloroethane	ND	1.0	ug/L
1,1-Dichloroethene	ND	1.0	ug/L
1,2-Dichloroethene (total)	ND	2.0	ug/L
1,2-Dichloropropane	ND	1.0	ug/L
cis-1,3-Dichloropropene	ND	1.0	ug/L
trans-1,3-Dichloropropene	ND	1.0	ug/L
Ethylbenzene	ND	1.0	ug/L
Methylene chloride	**1.1**	**1.0**	**ug/L**
1,1,2,2-Tetrachloroethane	ND	1.0	ug/L
Tetrachloroethene	ND	1.0	ug/L
Toluene	ND	1.0	ug/L
1,1,1-Trichloroethane	ND	1.0	ug/L
1,1,2-Trichloroethane	ND	1.0	ug/L
Trichloroethene	ND	1.0	ug/L
Vinyl chloride	ND	2.0	ug/L

SURROGATE	PERCENT RECOVERY	RECOVERY LIMITS
1,2-Dichloroethane-d4	84	(62 - 122)
Toluene-d8	95	(73 - 116)
4-Bromofluorobenzene	98	(68 - 118)

METHOD BLANK REPORT

GC/MS Volatiles

Client Lot #...: F1D190549 **Work Order #...:** MHGDR1AA **Matrix.....:** WATER
MB Lot-Sample #: F1D250000-103
Prep Date.....: 04/21/11 **Analysis Time..:** 19:55
Analysis Date..: 04/21/11 **Prep Batch #...:** 1115103
Dilution Factor: 1

PARAMETER	RESULT	REPORTING LIMIT	UNITS	METHOD
Acrolein	ND	10	ug/L	CFR136A 624
Acrylonitrile	ND	10	ug/L	CFR136A 624
Benzene	ND	1.0	ug/L	CFR136A 624
Bromoform	ND	1.0	ug/L	CFR136A 624
Bromomethane	ND	2.0	ug/L	CFR136A 624
Carbon tetrachloride	ND	1.0	ug/L	CFR136A 624
Chlorobenzene	ND	1.0	ug/L	CFR136A 624
Chlorodibromomethane	ND	1.0	ug/L	CFR136A 624
Chloroethane	ND	2.0	ug/L	CFR136A 624
Chloroform	ND	1.0	ug/L	CFR136A 624
Chloromethane	ND	2.0	ug/L	CFR136A 624
Dichlorobromomethane	ND	1.0	ug/L	CFR136A 624
1,1-Dichloroethane	ND	1.0	ug/L	CFR136A 624
1,2-Dichloroethane	ND	1.0	ug/L	CFR136A 624
1,1-Dichloroethene	ND	1.0	ug/L	CFR136A 624
1,2-Dichloroethene (total)	ND	2.0	ug/L	CFR136A 624
1,2-Dichloropropane	ND	1.0	ug/L	CFR136A 624
cis-1,3-Dichloropropene	ND	1.0	ug/L	CFR136A 624
trans-1,3-Dichloropropene	ND	1.0	ug/L	CFR136A 624
Ethylbenzene	ND	1.0	ug/L	CFR136A 624
Methylene chloride	ND	1.0	ug/L	CFR136A 624
1,1,2,2-Tetrachloroethane	ND	1.0	ug/L	CFR136A 624
Tetrachloroethene	ND	1.0	ug/L	CFR136A 624
Toluene	ND	1.0	ug/L	CFR136A 624
1,1,1-Trichloroethane	ND	1.0	ug/L	CFR136A 624
1,1,2-Trichloroethane	ND	1.0	ug/L	CFR136A 624
Trichloroethene	ND	1.0	ug/L	CFR136A 624
Vinyl chloride	ND	2.0	ug/L	CFR136A 624

SURROGATE	PERCENT RECOVERY	RECOVERY LIMITS
1,2-Dichloroethane-d4	84	(62 - 122)
Toluene-d8	94	(73 - 116)
4-Bromofluorobenzene	94	(68 - 118)

NOTE(S):

Calculations are performed before rounding to avoid round-off errors in calculated results.

LABORATORY CONTROL SAMPLE EVALUATION REPORT

GC/MS Volatiles

Client Lot #...: F1D190549 Work Order #...: MHGDR1AC Matrix.....: WATER
LCS Lot-Sample#: F1D250000-103
Prep Date.....: 04/21/11 Analysis Date..: 04/21/11
Prep Batch #...: 1115103 Analysis Time..: 14:38
Dilution Factor: 1

PARAMETER	PERCENT RECOVERY	RECOVERY LIMITS	METHOD
Acrolein	83	(40 - 140)	CFR136A 624
Acrylonitrile	106	(67 - 140)	CFR136A 624
Benzene	89	(76 - 119)	CFR136A 624
Bromoform	108	(71 - 139)	CFR136A 624
Bromomethane	84	(67 - 140)	CFR136A 624
Carbon tetrachloride	98	(73 - 140)	CFR136A 624
Chlorobenzene	92	(80 - 115)	CFR136A 624
Chlorodibromomethane	106	(74 - 140)	CFR136A 624
Chloroethane	80	(36 - 140)	CFR136A 624
Chloroform	89	(77 - 121)	CFR136A 624
Chloromethane	87	(41 - 140)	CFR136A 624
Dichlorobromomethane	96	(72 - 138)	CFR136A 624
1,1-Dichloroethane	89	(71 - 124)	CFR136A 624
1,2-Dichloroethane	89	(67 - 133)	CFR136A 624
1,1-Dichloroethene	94	(77 - 120)	CFR136A 624
1,2-Dichloroethene (total)	95	(78 - 123)	CFR136A 624
1,2-Dichloropropane	90	(67 - 137)	CFR136A 624
cis-1,3-Dichloropropene	100	(58 - 140)	CFR136A 624
trans-1,3-Dichloropropene	101	(61 - 140)	CFR136A 624
Ethylbenzene	94	(77 - 123)	CFR136A 624
Methylene chloride	92	(62 - 127)	CFR136A 624
1,1,2,2-Tetrachloroethane	75	(61 - 128)	CFR136A 624
Tetrachloroethene	93	(67 - 140)	CFR136A 624
Toluene	88	(75 - 120)	CFR136A 624
1,1,1-Trichloroethane	94	(81 - 125)	CFR136A 624
1,1,2-Trichloroethane	90	(73 - 126)	CFR136A 624
Trichloroethene	89	(76 - 126)	CFR136A 624
Vinyl chloride	85	(58 - 129)	CFR136A 624

SURROGATE	PERCENT RECOVERY	RECOVERY LIMITS
1,2-Dichloroethane-d4	68	(62 - 126)
Toluene-d8	84	(78 - 119)

(Continued on next page)

LABORATORY CONTROL SAMPLE EVALUATION REPORT

GC/MS Volatiles

Client Lot #...: F1D190549 **Work Order #...:** MHGDR1AC **Matrix.....:** WATER
LCS Lot-Sample#: F1D250000-103

SURROGATE	PERCENT RECOVERY	RECOVERY LIMITS
4-Bromofluorobenzene	77	(73 - 115)

NOTE(S):

Calculations are performed before rounding to avoid round-off errors in calculated results.

Bold print denotes control parameters

MATRIX SPIKE SAMPLE EVALUATION REPORT

GC/MS Volatiles

Client Lot #...: F1D190549 Work Order #...: MG84Q1AC-MS Matrix.....: WATER
MS Lot-Sample #: F1D200426-002 MG84Q1AD-MSD
Date Sampled...: 04/19/11 11:17 Date Received..: 04/20/11
Prep Date.....: 04/21/11 Analysis Date..: 04/22/11
Prep Batch #...: 1115103 Analysis Time..: 07:21
Dilution Factor: 1

PARAMETER	PERCENT RECOVERY	RECOVERY LIMITS	RPD	RPD LIMITS	METHOD
Acrolein	105	(50 - 150)			CFR136A 624
	112	(50 - 150)	6.3	(0-20)	CFR136A 624
Acrylonitrile	108	(50 - 150)			CFR136A 624
	104	(50 - 150)	4.0	(0-20)	CFR136A 624
Benzene	106	(47 - 150)			CFR136A 624
	98	(47 - 150)	8.5	(0-20)	CFR136A 624
Bromoform	111	(45 - 150)			CFR136A 624
	109	(45 - 150)	2.0	(0-20)	CFR136A 624
Bromomethane	72	(41 - 150)			CFR136A 624
	80	(41 - 150)	11	(0-20)	CFR136A 624
Carbon tetrachloride	112	(70 - 140)			CFR136A 624
	108	(70 - 140)	3.7	(0-20)	CFR136A 624
Chlorobenzene	103	(54 - 145)			CFR136A 624
	99	(54 - 145)	3.4	(0-20)	CFR136A 624
Chlorodibromomethane	111	(64 - 148)			CFR136A 624
	109	(64 - 148)	1.0	(0-20)	CFR136A 624
Chloroethane	81	(28 - 150)			CFR136A 624
	83	(28 - 150)	2.6	(0-20)	CFR136A 624
Chloroform	106	(51 - 138)			CFR136A 624
	98	(51 - 138)	7.8	(0-20)	CFR136A 624
Chloromethane	94	(33 - 150)			CFR136A 624
	94	(33 - 150)	0.63	(0-20)	CFR136A 624
Dichlorobromomethane	114	(47 - 150)			CFR136A 624
	104	(47 - 150)	9.2	(0-20)	CFR136A 624
1,1-Dichloroethane	104	(59 - 150)			CFR136A 624
	96	(59 - 150)	8.0	(0-20)	CFR136A 624
1,2-Dichloroethane	106	(59 - 143)			CFR136A 624
	97	(59 - 143)	8.6	(0-20)	CFR136A 624
1,1-Dichloroethene	103	(48 - 150)			CFR136A 624
	97	(48 - 150)	6.0	(0-20)	CFR136A 624
1,2-Dichloroethene (total)	108	(56 - 150)			CFR136A 624
	99	(56 - 150)	8.4	(0-20)	CFR136A 624
1,2-Dichloropropane	106	(56 - 150)			CFR136A 624
	99	(56 - 150)	6.2	(0-20)	CFR136A 624
cis-1,3-Dichloropropene	98	(50 - 150)			CFR136A 624
	96	(50 - 150)	1.8	(0-20)	CFR136A 624
trans-1,3-Dichloropropene	89	(31 - 150)			CFR136A 624
	92	(31 - 150)	3.5	(0-20)	CFR136A 624

(Continued on next page)

MATRIX SPIKE SAMPLE EVALUATION REPORT

GC/MS Volatiles

Client Lot #...: F1D190549 Work Order #...: MG84Q1AC-MS Matrix.....: WATER
MS Lot-Sample #: F1D200426-002 MG84Q1AD-MSD

PARAMETER	PERCENT RECOVERY	RECOVERY LIMITS	RPD	RPD LIMITS	METHOD
Ethylbenzene	105	(53 - 150)			CFR136A 624
	100	(53 - 150)	4.8	(0-20)	CFR136A 624
Methylene chloride	98	(38 - 150)			CFR136A 624
	93	(38 - 150)	5.3	(0-20)	CFR136A 624
1,1,2,2-Tetrachloroethane	88	(46 - 150)			CFR136A 624
	82	(46 - 150)	7.1	(0-20)	CFR136A 624
Tetrachloroethene	97	(65 - 148)			CFR136A 624
	95	(65 - 148)	2.2	(0-20)	CFR136A 624
Toluene	98	(52 - 150)			CFR136A 624
	94	(52 - 150)	5.0	(0-20)	CFR136A 624
1,1,1-Trichloroethane	110	(54 - 150)			CFR136A 624
	100	(54 - 150)	9.0	(0-20)	CFR136A 624
1,1,2-Trichloroethane	98	(61 - 137)			CFR136A 624
	94	(61 - 137)	3.6	(0-20)	CFR136A 624
Trichloroethene	98	(71 - 150)			CFR136A 624
	94	(71 - 150)	4.5	(0-20)	CFR136A 624
Vinyl chloride	83	(33 - 150)			CFR136A 624
	80	(33 - 150)	3.4	(0-20)	CFR136A 624

SURROGATE	PERCENT RECOVERY	RECOVERY LIMITS
1,2-Dichloroethane-d4	78	(62 - 122)
	76	(62 - 122)
Toluene-d8	87	(73 - 116)
	91	(73 - 116)
4-Bromofluorobenzene	83	(68 - 118)
	84	(68 - 118)

NOTE(S):

Calculations are performed before rounding to avoid round-off errors in calculated results.

Bold print denotes control parameters

AECOM Technical Services Inc.

Client Sample ID: 60162412-SMP-PL5-WW-OTH-0615

TOTAL Metals

Lot-Sample #...: F1D190549-001 Matrix.....: WATER
Date Sampled...: 04/19/11 12:30 Date Received..: 04/19/11

PARAMETER	RESULT	REPORTING LIMIT	UNITS	METHOD	PREPARATION-ANALYSIS DATE	WORK ORDER #
Prep Batch #...: 1110117						
Cadmium	ND	5	ug/L	SW846 6010B	04/20-04/21/11	MG70P1AC
		Dilution Factor: 1		Analysis Time..: 23:27		
Chromium	ND	10	ug/L	SW846 6010B	04/20-04/21/11	MG70P1AD
		Dilution Factor: 1		Analysis Time..: 23:27		
Copper	6.9 B	25	ug/L	SW846 6010B	04/20-04/21/11	MG70P1AE
		Dilution Factor: 1		Analysis Time..: 23:27		
Iron	414	100	ug/L	SW846 6010B	04/20-04/21/11	MG70P1AF
		Dilution Factor: 1		Analysis Time..: 23:27		
Nickel	38.9 B	40	ug/L	SW846 6010B	04/20-04/21/11	MG70P1AG
		Dilution Factor: 1		Analysis Time..: 23:27		
Lead	4.5 B	10	ug/L	SW846 6010B	04/20-04/21/11	MG70P1AH
		Dilution Factor: 1		Analysis Time..: 23:27		
Zinc	399 E	20	ug/L	SW846 6010B	04/20-04/21/11	MG70P1AJ
		Dilution Factor: 1		Analysis Time..: 23:27		

NOTE(S):

B Estimated result. Result is less than RL.

E Matrix interference.

METHOD BLANK REPORT

TOTAL Metals

Client Lot #...: F1D190549 **Matrix.....:** WATER

PARAMETER	RESULT	REPORTING LIMIT	UNITS	METHOD	PREPARATION-ANALYSIS DATE	WORK ORDER #
MB Lot-Sample #: F1D200000-117 **Prep Batch #...:** 1110117						
Cadmium	ND	5	ug/L	SW846 6010B	04/20-04/21/11	MG80V1AA
		Dilution Factor: 1				
		Analysis Time..: 23:12				
Chromium	ND	10	ug/L	SW846 6010B	04/20-04/21/11	MG80V1AC
		Dilution Factor: 1				
		Analysis Time..: 23:12				
Copper	ND	25	ug/L	SW846 6010B	04/20-04/21/11	MG80V1AD
		Dilution Factor: 1				
		Analysis Time..: 23:12				
Iron	ND	100	ug/L	SW846 6010B	04/20-04/21/11	MG80V1AE
		Dilution Factor: 1				
		Analysis Time..: 23:12				
Lead	ND	10	ug/L	SW846 6010B	04/20-04/21/11	MG80V1AG
		Dilution Factor: 1				
		Analysis Time..: 23:12				
Nickel	ND	40	ug/L	SW846 6010B	04/20-04/21/11	MG80V1AF
		Dilution Factor: 1				
		Analysis Time..: 23:12				
Zinc	ND	20	ug/L	SW846 6010B	04/20-04/21/11	MG80V1AH
		Dilution Factor: 1				
		Analysis Time..: 23:12				

NOTE(S):

Calculations are performed before rounding to avoid round-off errors in calculated results.

LABORATORY CONTROL SAMPLE EVALUATION REPORT

TOTAL Metals

Client Lot #...: F1D190549 **Matrix.....:** WATER

PARAMETER	PERCENT RECOVERY	RECOVERY LIMITS	METHOD	PREPARATION-ANALYSIS DATE	WORK ORDER #
LCS Lot-Sample#: F1D200000-117 **Prep Batch #...:** 1110117					
Cadmium	106	(80 - 120)	SW846 6010B	04/20-04/21/11	MG80V1AJ
		Dilution Factor: 1	Analysis Time..: 23:20		
Chromium	103	(80 - 120)	SW846 6010B	04/20-04/21/11	MG80V1AK
		Dilution Factor: 1	Analysis Time..: 23:20		
Copper	101	(80 - 120)	SW846 6010B	04/20-04/21/11	MG80V1AL
		Dilution Factor: 1	Analysis Time..: 23:20		
Iron	107	(80 - 120)	SW846 6010B	04/20-04/21/11	MG80V1AM
		Dilution Factor: 1	Analysis Time..: 23:20		
Nickel	103	(80 - 120)	SW846 6010B	04/20-04/21/11	MG80V1AN
		Dilution Factor: 1	Analysis Time..: 23:20		
Lead	102	(80 - 120)	SW846 6010B	04/20-04/21/11	MG80V1AP
		Dilution Factor: 1	Analysis Time..: 23:20		
Zinc	109	(80 - 120)	SW846 6010B	04/20-04/21/11	MG80V1AQ
		Dilution Factor: 1	Analysis Time..: 23:20		

NOTE(S):

Calculations are performed before rounding to avoid round-off errors in calculated results.

MATRIX SPIKE SAMPLE EVALUATION REPORT

TOTAL Metals

Client Lot #...: F1D190549 **Matrix.....:** WATER
Date Sampled...: 04/19/11 12:30 **Date Received..:** 04/19/11

PARAMETER	PERCENT RECOVERY	RECOVERY LIMITS	RPD	RPD LIMITS	METHOD	PREPARATION-ANALYSIS DATE	WORK ORDER #
MS Lot-Sample #: F1D190549-001 **Prep Batch #...:** 1110117							
Cadmium	102	(75 - 125)			SW846 6010B	04/20-04/21/11	MG70P1AW
	100	(75 - 125)	1.7	(0-20)	SW846 6010B	04/20-04/21/11	MG70P1AX
		Dilution Factor: 1					
		Analysis Time..: 23:42					
Chromium	100	(75 - 125)			SW846 6010B	04/20-04/21/11	MG70P1A0
	98	(75 - 125)	1.5	(0-20)	SW846 6010B	04/20-04/21/11	MG70P1A1
		Dilution Factor: 1					
		Analysis Time..: 23:42					
Copper	98	(75 - 125)			SW846 6010B	04/20-04/21/11	MG70P1A2
	96	(75 - 125)	1.4	(0-20)	SW846 6010B	04/20-04/21/11	MG70P1A3
		Dilution Factor: 1					
		Analysis Time..: 23:42					
Iron	104	(75 - 125)			SW846 6010B	04/20-04/21/11	MG70P1A4
	102	(75 - 125)	1.6	(0-20)	SW846 6010B	04/20-04/21/11	MG70P1A5
		Dilution Factor: 1					
		Analysis Time..: 23:42					
Lead	97	(75 - 125)			SW846 6010B	04/20-04/21/11	MG70P1A8
	96	(75 - 125)	1.4	(0-20)	SW846 6010B	04/20-04/21/11	MG70P1A9
		Dilution Factor: 1					
		Analysis Time..: 23:42					
Nickel	98	(75 - 125)			SW846 6010B	04/20-04/21/11	MG70P1A6
	97	(75 - 125)	1.5	(0-20)	SW846 6010B	04/20-04/21/11	MG70P1A7
		Dilution Factor: 1					
		Analysis Time..: 23:42					
Zinc	107	(75 - 125)			SW846 6010B	04/20-04/21/11	MG70P1CA
	105	(75 - 125)	1.5	(0-20)	SW846 6010B	04/20-04/21/11	MG70P1CC
		Dilution Factor: 1					
		Analysis Time..: 23:42					

NOTE(S):

Calculations are performed before rounding to avoid round-off errors in calculated results.

AECOM Technical Services Inc.

Client Sample ID: 60162412-SMP-PL5-WW-OTH-0615

General Chemistry

Lot-Sample #...: F1D190549-001 Work Order #...: MG70P Matrix.....: WATER
Date Sampled...: 04/19/11 12:30 Date Received..: 04/19/11

PARAMETER	RESULT	RL	UNITS	METHOD	PREPARATION-ANALYSIS DATE	PREP BATCH #
pH (liquid)	7.0	0.10	No Units	SW846 9040	04/19/11	1109236
		Dilution Factor: 1		Analysis Time..: 15:04		
COD	28.0	20.0	mg/L	MCAWW 410.4	04/21-04/22/11	1112102
		Dilution Factor: 1		Analysis Time..: 00:00		
Total Suspended Solids	2.0 B	4.0	mg/L	MCAWW 160.2	04/22-04/25/11	1111274
		Dilution Factor: 1		Analysis Time..: 00:00		

NOTE(S):

RL Reporting Limit

B Estimated result. Result is less than RL.

METHOD BLANK REPORT

General Chemistry

Client Lot #...: F1D190549 **Matrix.....:** WATER

PARAMETER	RESULT	REPORTING LIMIT	UNITS	METHOD	PREPARATION-ANALYSIS DATE	PREP BATCH #
COD		Work Order #: MHDNN1AA		MB Lot-Sample #:	F1D220000-102	
	ND	20.0	mg/L	MCAWW 410.4	04/21-04/22/11	1112102
		Dilution Factor: 1				
		Analysis Time..: 00:00				
Total Suspended Solids		Work Order #: MHGL21AA		MB Lot-Sample #:	F1D210000-274	
	ND	4.0	mg/L	MCAWW 160.2	04/22-04/25/11	1111274
		Dilution Factor: 1				
		Analysis Time..: 00:00				

NOTE(S):

Calculations are performed before rounding to avoid round-off errors in calculated results.

LABORATORY CONTROL SAMPLE EVALUATION REPORT

General Chemistry

Client Lot #...: F1D190549 Matrix.....: WATER

PARAMETER	PERCENT RECOVERY	RECOVERY LIMITS	METHOD	PREPARATION-ANALYSIS DATE	PREP BATCH #
pH (liquid)		Work Order #: MG8A21AA	LCS Lot-Sample#: F1D190000-236		
	100	(99 - 101)	SW846 9040	04/19/11	1109236
		Dilution Factor: 1	Analysis Time..: 15:02		
COD		Work Order #: MHDNN1AC	LCS Lot-Sample#: F1D220000-102		
	96	(90 - 110)	MCAWW 410.4	04/21-04/22/11	1112102
		Dilution Factor: 1	Analysis Time..: 00:00		
Total Suspended Solids		Work Order #: MHGL21AC	LCS Lot-Sample#: F1D210000-274		
	87	(79 - 122)	MCAWW 160.2	04/22-04/25/11	1111274
		Dilution Factor: 1	Analysis Time..: 00:00		

NOTE(S):

Calculations are performed before rounding to avoid round-off errors in calculated results.

MATRIX SPIKE SAMPLE EVALUATION REPORT

General Chemistry

Client Lot #...: F1D190549 **Matrix.....:** WATER
Date Sampled...: 04/19/11 12:30 **Date Received..:** 04/19/11

PARAMETER	PERCENT RECOVERY	RECOVERY LIMITS	METHOD	PREPARATION-ANALYSIS DATE	PREP BATCH #
COD		Work Order #...: MG70P1CH		MS Lot-Sample #: F1D190549-001	
	88	(90 - 110)	MCAWW 410.4	04/21-04/22/11	1112102

Dilution Factor: 1 Analysis Time..: 00:00

NOTE(S):

Calculations are performed before rounding to avoid round-off errors in calculated results.

SAMPLE DUPLICATE EVALUATION REPORT

General Chemistry

Client Lot #...: F1D190549 **Work Order #...:** MG70P-SMP MG70P-DUP **Matrix.....:** WATER

Date Sampled...: 04/19/11 12:30 **Date Received..:** 04/19/11

PARAM	RESULT	DUPLICATE RESULT	UNITS	RPD	RPD LIMIT	METHOD	PREPARATION-ANALYSIS DATE	PREP BATCH #
COD						SD Lot-Sample #:	F1D190549-001	
	28.0	26.0	mg/L	7.4	(0-20)	MCAWW 410.4	04/21-04/22/11	1112102
			Dilution Factor: 1			Analysis Time..: 00:00		
pH (liquid)						SD Lot-Sample #:	F1D190549-001	
	7.0	7.1	No Units	0.99	(0-0.0)	SW846 9040	04/19/11	1109236
			Dilution Factor: 1			Analysis Time..: 15:04		

SAMPLE DUPLICATE EVALUATION REPORT

General Chemistry

Client Lot #...: F1D190549 **Work Order #...:** MHD6Q-SMP MHD6Q-DUP **Matrix.....:** WATER

Date Sampled...: 04/21/11 13:00 **Date Received..:** 04/22/11

PARAM	RESULT	DUPLICATE RESULT	UNITS	RPD	RPD LIMIT	METHOD	PREPARATION-ANALYSIS DATE	PREP BATCH #
Total Suspended Solids						SD Lot-Sample #:	F1D220468-002	
	8.0	7.0	mg/L	13	(0-0.0)	MCAWW 160.2	04/22-04/25/11	1112298
			Dilution Factor: 1			Analysis Time..: 00:00		

AECOM Technical Services Inc.

Client Sample ID: 60162412-SMP-PL5-WW-OTH-0615

Radiochemistry

Lab Sample ID: F1D190549-001
Work Order: MG70P
Matrix: WATER

Date Collected: 04/19/11 1230
Date Received: 04/19/11 1325

Parameter	Result	Qual	Total Uncert. (2 σ+/-)	RL	mdc	Prep Date	Analysis Date
Iso THORIUM (SHORT CT) DOE A-01-R MOD				**pCi/L**	**Batch # 1110343**		**Yld % 39**
Thorium 228	0.50	U	0.39	1.00	0.50	04/20/11	04/24/11
Thorium 230	0.37	U	0.31	1.00	0.39	04/20/11	04/24/11
Thorium 232	0.03	U	0.14	1.00	0.33	04/20/11	04/24/11
Iso URANIUM (SHORT CT) DOE A-01-R MOD				**pCi/L**	**Batch # 1110344**		**Yld % 38**
Uranium 234	0.18	U	0.20	1.00	0.25	04/20/11	04/24/11
Uranium 235/236	0.03	U	0.13	1.00	0.34	04/20/11	04/24/11
Uranium 238	0.17	U	0.21	1.00	0.27	04/20/11	04/24/11
Gross Alpha/Beta EPA 900				**pCi/L**	**Batch # 1109270**		**Yld %**
Gross Alpha	2.0	U	3.3	3.0	5.0	04/19/11	04/26/11
Gross Beta	20.3		4.2	4.0	4.3	04/19/11	04/26/11
Radium 226 by EPA 903.0 MOD				**pCi/L**	**Batch # 1110359**		**Yld % 77**
Radium (226)	0.41	J	0.17	1.00	0.16	04/20/11	04/21/11
Radium 228 by GFPC EPA 904 MOD				**pCi/L**	**Batch # 1110364**		**Yld % 84**
Radium 228	0.43	J	0.26	1.00	0.39	04/20/11	04/25/11

NOTE (S)

Data are incomplete without the case narrative.

MDC is determined by instrument performance only.
Bold results are greater than the MDC.

J Result is greater than sample detection limit but less than stated reporting limit.
U Result is less than the sample detection limit.

METHOD BLANK REPORT

Radiochemistry

Client Lot ID: F1D190549
Matrix: WATER

Parameter	Result	Qual	Total Uncert. (2 σ+/-)	RL	MDC		Prep Date	Analysis Date	Lab Sample ID
Gross Alpha/Beta EPA 900			pCi/L	Batch #	1109270	Yld %			F1D190000-270B
Gross Alpha	0.23	U	0.50	3.00	0.89		04/19/11	04/25/11	
Gross Beta	0.68	U	0.67	4.00	1.1		04/19/11	04/25/11	
Iso URANIUM (SHORT CT) DOE A-01-R MOD			pCi/L	Batch #	1110344	Yld %	90		F1D200000-344B
Uranium 234	0.087	U	0.093	1.00	0.12		04/20/11	04/24/11	
Uranium 235/236	-0.024	U	0.022	1.00	0.16		04/20/11	04/24/11	
Uranium 238	0.009	U	0.043	1.00	0.11		04/20/11	04/24/11	
Radium 226 by EPA 903.0 MOD			pCi/L	Batch #	1110359	Yld %	90		F1D200000-359B
Radium (226)	0.070	U	0.087	1.00	0.14		04/20/11	04/21/11	
Radium 228 by GFPC EPA 904 MOD			pCi/L	Batch #	1110364	Yld %	96		F1D200000-364B
Radium 228	0.05	U	0.19	1.00	0.33		04/20/11	04/25/11	
Iso THORIUM (SHORT CT) DOE A-01-R MOD			pCi/L	Batch #	1110343	Yld %	88		F1D200000-343B
Thorium 228	-0.051	U	0.055	1.00	0.20		04/20/11	04/24/11	
Thorium 230	**0.24**		**0.15**	1.00	0.12		**04/20/11**	**04/24/11**	
Thorium 232	0.026	U	0.062	1.00	0.12		04/20/11	04/24/11	

NOTE(S)

Data are incomplete without the case narrative.

MDC is determined using instrument performance only
Bold results are greater than the MDC.

U Result is less than the sample detection limit.

Laboratory Control Sample Report

Radiochemistry

Client Lot ID: F1D190549
Matrix: WATER

Parameter	Spike Amount	Result	Total Uncert. (2 σ+/-)	MDC	% Yld	% Rec	Lab Sample ID / QC Control Limits
Gross Alpha/Beta EPA 900			pCi/L	900.0 MOD			F1D190000-270C
Gross Alpha	49.4	55.8	6.1	1.1		113	(83 - 128)
Gross Beta	66.2	72.1	6.2	1.1		109	(90 - 115)
	Batch #:	1109270		Analysis Date:	04/26/11		
Iso THORIUM (SHORT CT) DOE A-01-R MOD			pCi/L	A-01-R MOD			F1D200000-343C
Thorium 230	9.49	8.5	1.1	0.2	93	90	(79 - 122)
	Batch #:	1110343		Analysis Date:	04/24/11		
Iso URANIUM (SHORT CT) DOE A-01-R MOD			pCi/L	A-01-R MOD			F1D200000-344C
Uranium 234	13.1	14.1	1.6	0.2	83	108	(83 - 130)
Uranium 238	13.6	14.3	1.7	0.1	83	105	(86 - 128)
	Batch #:	1110344		Analysis Date:	04/24/11		
Radium 226 by EPA 903.0 MOD			pCi/L	903.0 MOD			F1D200000-359C
Radium (226)	11.3	11.6	1.2	0.1	84	103	(62 - 136)
	Batch #:	1110359		Analysis Date:	04/21/11		
Radium 228 by GFPC EPA 904 MOD			pCi/L	904 MOD			F1D200000-364C
Radium 228	5.58	4.71	0.59	0.34	96	84	(69 - 140)
	Batch #:	1110364		Analysis Date:	04/25/11		

NOTE(S)

MDC is determined by instrument performance only
Calculations are performed before rounding to avoid round-off error in calculated results

MATRIX SPIKE REPORT

Radiochemistry

Client Lot Id: F1C290467 Date Sampled: 03/25/11
Matrix: WATER Date Received: 03/29/11

Parameter	Spike Amount	Spike Result	Total Uncert. (2σ +/-)	Spike Yld.	Sample Result	Total Uncert. (2 σ +/-)	QC Sample ID %YLD	QC Sample ID %REC	QC Control Limits
Gross Alpha/Beta EPA 900			pCi/L		900.0 MOD			F1C290467-001	
Gross Alpha	494	379	51		0.2	6.9		77	(34-150)
	Batch #:	1109270		Analysis Date:		04/25/11			
Gross Alpha/Beta EPA 900			pCi/L		900.0 MOD			F1C290467-001	
Gross Beta	662	724	61		49	11		102	(51-150)
	Batch #:	1109270		Analysis Date:		04/25/11			

NOTE (S)

Data are incomplete without the case narrative.

Calculations are performed before rounding to avoid round-off errors in calculated results.

DUPLICATE EVALUATION REPORT

Radiochemistry

Client Lot ID: F1D190549 Date Sampled: 04/19/11
Matrix: WATER Date Received: 04/19/11

Parameter	SAMPLE Result		Total Uncert. (2σ+/-)	% Yld	DUPLICATE Result		Total Uncert. (2σ+/-)	% Yld	QC Sample ID Precision	
Iso THORIUM (SHORT CT) DOE A-01-R MOD				**pCi/L**	**A-01-R MOD**				**F1D190549-001**	
Thorium 228	0.50	U	0.39	39	0.12	U	0.25	36	122	%RPD
Thorium 230	0.37	U	0.31	39	0.04	U	0.16	36	164	%RPD
Thorium 232	0.03	U	0.14	39	-0.040	U	0.040	36	1100	%RPD
	Batch #:		1110343	(Sample)	1110343		(Duplicate)			
Iso URANIUM (SHORT CT) DOE A-01-R MOD				**pCi/L**	**A-01-R MOD**				**F1D190549-001**	
Uranium 234	0.18	U	0.20	38	0.15		0.12	86	20	%RPD
Uranium 235/236	0.03	U	0.13	38	0.028	U	0.056	86	2	%RPD
Uranium 238	0.17	U	0.21	38	0.19		0.14	86	7	%RPD
	Batch #:		1110344	(Sample)	1110344		(Duplicate)			
Radium 226 by EPA 903.0 MOD				**pCi/L**	**903.0 MOD**				**F1D190549-001**	
Radium (226)	0.41	J	0.17	77	0.72	J	0.23	76	55	%RPD
	Batch #:		1110359	(Sample)	1110359		(Duplicate)			
Radium 228 by GFPC EPA 904 MOD				**pCi/L**	**904 MOD**				**F1D190549-001**	
Radium 228	0.43	J	0.26	84	-0.34	U	0.24	83	1580	%RPD
	Batch #:		1110364	(Sample)	1110364		(Duplicate)			
Gross Alpha/Beta EPA 900				**pCi/L**	**900.0 MOD**				**F1C290467-001**	
Gross Alpha	0.2	U	6.9		2.2	U	8.2		163	%RPD
Gross Beta	49		11		37.5		9.5		27	%RPD
	Batch #:		1109270	(Sample)	1109270		(Duplicate)			

NOTE(S)

Data are incomplete without the case narrative.
Calculations are performed before rounding to avoid round-off error in calculated results

J Result is greater than sample detection limit but less than stated reporting limit.
U Result is less than the sample detection limit.

F1D190549

CLIENT ANALYSIS SUMMARY

Storage Loc: 1-126,R97,V19

Project Manager: JA | Quote #: 87754 | SDG: F1D190549

Date Received: 2011-04-19

Project: Mallinckrodt St. Louis Plant

Analytical Due Date: 2011-04-25

PO#: 10372ACM | Report to: Mark Tepperman

RUSH

Report Due Date: 2011-04-26

Client: 404224 AECOM Technical Services Inc.

Report Type: D Expanded Deliverable

#SMPS In LOT: 2 | EDD Code: 00

SAMPLE LOGIN: enter lot # into SDG field. Gamma Spec is as received for 5 BD TAT. Gamma Ra226, iso U and iso Th will be logged when initial count is complete. Log ZHE EXTRACTION line item for TCLP VOA. Log TCLP EXTRACTION line item for TCLP analyses. RAD: initial Gamma Spec counted as received . When complete dry/grind and prep for Gamma Ra226,TAR,Iso U and Iso Th. GAMMA SPEC. SHOULD BE COUNTED IN CLIENTS 500ML MARINELLI. RA226/228 - NO INGROWTH REQUIRED!!! RA226/228 MUST BE PREPPED IN SEPERATE ALIQUOTS!!! DO NOT PREP TOGETHER! STANDARD QC ON CLIENT SAMPLE IS REQUIRED FOR ALL ANALYSES.

SAMPLE #	CLIENT SAMPLE ID	Site ID	Client Matrix	DATE/TIME SAMPLED	WORKORDER	I
1	60162412-SMP-PL5-WW-OTH-061			2011-04-19 / 1230	MG70P	WATER

SAMPLE COMMENTS:

ZN	QM	SW846	6010B	WATER, ICP Metals	GJ	METALS, TOTAL - 2% HCL	01	STANDARD TEST SET	PROT: M	WRK LOC	06		
CR	QM	SW846	6010B	WATER, ICP Metals	GJ	METALS, TOTAL - 2% HCL	01	STANDARD TEST SET	PROT: M	WRK LOC	06		
CU	QM	SW846	6010B	WATER, ICP Metals	GJ	METALS, TOTAL - 2% HCL	01	STANDARD TEST SET	PROT: M	WRK LOC	06		
CD	QM	SW846	6010B	WATER, ICP Metals	GJ	METALS, TOTAL - 2% HCL	01	STANDARD TEST SET	PROT: M	WRK LOC	06		
FE	QM	SW846	6010B	WATER, ICP Metals	GJ	METALS, TOTAL - 2% HCL	01	STANDARD TEST SET	PROT: M	WRK LOC	06		
PB	QM	SW846	6010B	WATER, ICP Metals	GJ	METALS, TOTAL - 2% HCL	01	STANDARD TEST SET	PROT: M	WRK LOC	06		
NI	QM	SW846	6010B	WATER, ICP Metals	GJ	METALS, TOTAL - 2% HCL	01	STANDARD TEST SET	PROT: M	WRK LOC	06		
XX	DN	CFR13 6A	624	WATER, 624, VOA	25	PURGE AND TRAP - 25 mL purge (Waters)	01	STANDARD TEST SET	PROT: O	WRK LOC	06	TIC: N	
XX	ZZ	NONE	NONE	WATER, RAD SCREEN	88	NO SAMPLE PREPARATION PERFORMED / DIRECT	01	STANDARD TEST SET	PROT: A	WRK LOC	06		
XX	2I	EML	A-01-R MOD	WATER, Iso URANIUM (SHORT CT)	J2	Extraction Chromatography - Sequential Actinides	01	STANDARD TEST SET	PROT: R	WRK LOC	06		
XX	2K	EML	A-01-R MOD	WATER, Iso THORIUM (SHORT CT)	J2	Extraction Chromatography - Sequential Actinides	01	STANDARD TEST SET	PROT: R	WRK LOC	06		
XX	Y9	EPA	900.0 MOD	WATER, Gross Alpha/Beta	FR	Evaporative Preparation, Total	01	STANDARD TEST SET	PROT: R	WRK LOC	06		
XX	Z4	EPA	904 MOD	WATER, 904 MOD, Ra-228 (NO INGROWTH)	N*	No Ingrowth	2X	SPECIAL PROJECTS	PROT: R	WRK LOC	06		
XX	ZY	EPA	903.0 MOD	WATER, 903 MOD, Ra-226 (NO INGROWTH)	N*	No Ingrowth	2X	SPECIAL PROJECTS	PROT: R	WRK LOC	06		
XX	AL	MCAW W	160.2	WATER, 160.2, TSS	88	NO SAMPLE PREPARATION PERFORMED / DIRECT	01	STANDARD TEST SET	PROT: W	WRK LOC	06		
XX	FJ	SW846	9040	WATER, 9040, pH	88	NO SAMPLE PREPARATION PERFORMED / DIRECT	01	STANDARD TEST SET	PROT: W	WRK LOC	06		
XX	VO	MCAW W	410.4	WATER, 410.4, COD	21	DIGESTION, NON-METAL/INORGANICS	01	STANDARD TEST SET	PROT: W	WRK LOC	06		

SAMPLE #	CLIENT SAMPLE ID	Site ID	Client Matrix	DATE/TIME SAMPLED	WORKORDER	I
2	VOC BLANK			2011-04-19 / 0	MG72P	WATER

SAMPLE COMMENTS:

XX	DN	CFR13 6A	624	WATER, 624, VOA	25	PURGE AND TRAP - 25 mL purge (Waters)	01	STANDARD TEST SET	PROT: O	WRK LOC	06	TIC: N	

St. Louis
13715 Rider Trail North
Earth City, MO 63045
phone 314.298.8566 fax 314.298.8757

CUR 206

Chain of Custody Record

TestAmerica
THE LEADER IN ENVIRONMENTAL TESTING

TestAmerica Laboratories, Inc.

Client Contact	Project Manager: Ed Palser	Site Contact: Casey Knuteson	Date: 4/19/11	COC No: 0615
AECOM	Tel/Fax: (618)444-5535	Lab Contact: Jayna Awold	Carrier: Test America	1 of 1 COCs
Address 8005 Outer Circle RD	Analysis Turnaround Time			Job No. 60162412
City/State/Zip Brooks City Base, TX 78235	Calendar (C) or Work Days (W) C			
(618)444-5535 Phone	TAT if different from Below			
none FAX	☐ 2 weeks			SDG No.
Project Name: Mallinckrodt C-T Decommissioning	■ 1 week			
Site: St. Louis Plant	☐ 2 days			
P O # 10372ACM	☐ 1 day			

Sample Identification	Sample Date	Sample Time	Sample Type	Matrix	# of Cont.	pH	TSS	COD	ICP Metals (Cd, Cr, Cu, Fe, Pb, Ni, Zn)	Volatile Organics (EPA Method 624)	Gross Alpha/Beta	Isotopic Uranium (Alpha Spectrometry)	Radium-226 (GFPC, no decay/ingrowth)	Radium-228 (GFPC - no decay/ingrowth)	Isotopic Thorium (Alpha Spectrometry)	n/a	n/a	n/a	n/a	n/a	n/a	n/a	n/a	Sample Specific Notes:	
60162412-SMP-PL5-WW-OTH-0615	4/19/2011	12:30	Water	Water	15	x	x	x	x	x	x	x	x	x	x	n/a	n/a	n/a	n/a	n/a	n/a	n/a	n/a	* Further Testing if Gross Beta above 50 pci/L	
VOC Blanks 2x40mV	n/a	n/a	n/a	n/a	2	n/a	n/a	n/a	n/a	x	n/a	n/a	n/a	n/a	n/a	n/a	n/a	n/a	n/a	n/a	n/a	n/a	n/a		
n/a n/a n/a n/a	n/a	n/a	n/a	n/a	n/a	n/a	n/a	n/a	n/a	n/a	n/a	n/a	n/a	n/a	n/a	n/a	n/a	n/a	n/a	n/a	n/a	n/a	n/a	n/a	n/a
n/a n/a n/a n/a	n/a	n/a	n/a	n/a	n/a	n/a	n/a	n/a	n/a	n/a	n/a	n/a	n/a	n/a	n/a	n/a	n/a	n/a	n/a	n/a	n/a	n/a	n/a	n/a	n/a
n/a n/a n/a n/a 6x1L	n/a	n/a	n/a	n/a	n/a	n/a	n/a	n/a	n/a	n/a	n/a	n/a	n/a	n/a	n/a	n/a	n/a	n/a	n/a	n/a	n/a	n/a	n/a	n/a	n/a
n/a n/a n/a n/a 5x500P	n/a	n/a	n/a	n/a	n/a	n/a	n/a	n/a	n/a	n/a	n/a	n/a	n/a	n/a	n/a	n/a	n/a	n/a	n/a	n/a	n/a	n/a	n/a	n/a	n/a
n/a n/a n/a n/a 1x250P	n/a	n/a	n/a	n/a	n/a	n/a	n/a	n/a	n/a	n/a	n/a	n/a	n/a	n/a	n/a	n/a	n/a	n/a	n/a	n/a	n/a	n/a	n/a	n/a	n/a
n/a n/a n/a n/a 3x40mV	n/a	n/a	n/a	n/a	n/a	n/a	n/a	n/a	n/a	n/a	n/a	n/a	n/a	n/a	n/a	n/a	n/a	n/a	n/a	n/a	n/a	n/a	n/a	n/a	n/a
n/a n/a n/a n/a	n/a	n/a	n/a	n/a	n/a	n/a	n/a	n/a	n/a	n/a	n/a	n/a	n/a	n/a	n/a	n/a	n/a	n/a	n/a	n/a	n/a	n/a	n/a	n/a	n/a
n/a n/a n/a n/a	n/a	n/a	n/a	n/a	n/a	n/a	n/a	n/a	n/a	n/a	n/a	n/a	n/a	n/a	n/a	n/a	n/a	n/a	n/a	n/a	n/a	n/a	n/a	n/a	n/a
n/a n/a n/a n/a	n/a	n/a	n/a	n/a	n/a	n/a	n/a	n/a	n/a	n/a	n/a	n/a	n/a	n/a	n/a	n/a	n/a	n/a	n/a	n/a	n/a	n/a	n/a	n/a	n/a
n/a n/a n/a n/a	n/a	n/a	n/a	n/a	n/a	n/a	n/a	n/a	n/a	n/a	n/a	n/a	n/a	n/a	n/a	n/a	n/a	n/a	n/a	n/a	n/a	n/a	n/a	n/a	n/a

Preservation Used: 1= Ice, 2= HCl; 3= H2SO4; 4=HNO3; 5=NaOH; 6= Other _____

Possible Hazard Identification
■ *Non-Hazard* ☐ *Flammable* ☐ *Skin Irritant* *Poison B* ☐ *Unknown* ☐

Sample Disposal (A fee may be assessed if samples are retained longer than 1 month)
☐ *Return To Client* ☐ *Disposal By Lab* ■ *Archive For* 1 *Months*

Special Instructions/QC Requirements & Comments: Possible hazards include radiological. Sample methods to comply with MSD Ordinance 12559 standards.

Relinquished by:	Company:	Date/Time:	Received by:	Company:	Date/Time:
[signature]	TA / AECOM	4/18/11 1255	[signature]	TA	4/18/11 1255
[signature]	TA	4/18/11 1320	[signature]	TASTL	4/19/11 1325

Lot F1D190549

29 of 30

MSD 011309

TestAmerica - St. Louis

TestAmerica
THE LEADER IN ENVIRONMENTAL TESTING

Lot #(s): AB4-1711 FIC F1D190549

CONDITION UPON RECEIPT FORM

Client: AECOM
Quote No: 87754
COC/RFA No: 0615
Initiated By: NVO

206

Date: 4/19/11 Time: ~~1255~~ 1325 NVO 4/19/11

Shipping Information

Shipper: FedEx UPS DHL (Courier) Client Other: NT Multiple Packages: Y (N)

Shipping # (s):*		Sample Temperature (s):**	
1. N/A	6.	1. 6	6.
2.	7.	2.	7.
3.	8.	3.	8.
4.	9.	4.	9.
5.	10.	5.	10.

*Numbered shipping lines correspond to Numbered Sample Temp lines

**Sample must be received at 4°C ± 2°C. If not, note contents below. Temperature variance does NOT affect the following: Metals-Liquid or Rad tests- Liquid or Solids

Condition (Circle "Y" for yes, "N" for no and "N/A" for not applicable):

1.	(Y) N	Are there custody seals present on the cooler?	8.	Y (N)	Are there custody seals present on bottles?
2.	Y (N) N/A	Do custody seals on cooler appear to be tampered with?	9.	Y N (N/A)	Do custody seals on bottles appear to be tampered with?
3.	(Y) N	Were contents of cooler frisked after opening, but before unpacking?	10.	(Y) N N/A	Was sample received with proper pH[1]? (If not, make note below)
4.	(Y) N	Sample received with Chain of Custody?	11.	(Y) N	Sample received in proper containers?
5.	(Y) N N/A	Does the Chain of Custody match sample ID's on the container(s)?	12.	(Y) N N/A	Headspace in VOA or TOX liquid samples? (If Yes, note sample ID's below)
6.	Y (N)	Was sample received broken?	13.	Y N (N/A)	Was Internal COC/Workshare received?
7.	(Y) N	Is sample volume sufficient for analysis?	14.	Y N (N/A)	Was pH taken by original TestAmerica lab?

[1] For DOB-AL (Pantex, LANL, Sandia) sites, pH of ALL containers received must be verified, EXCEPT VOA, TOX and soils.

Notes:
C0162412-SMP-PL5-WW-OTH-0615 1

Corrective Action:
☐ Client Contact Name: Informed by:
☐ Sample(s) processed "as is"
☐ Sample(s) on hold until: If released, notify:
Project Management Review: Date: 04-20-11

THIS FORM MUST BE COMPLETED AT THE TIME THE ITEMS ARE BEING CHECKED IN. IF ANY ITEM IS COMPLETED BY SOMEONE OTHER THAN THE INITIATOR, THEN THAT PERSON IS REQUIRED TO APPLY THEIR INITIAL AND THE DATE NEXT TO THAT ITEM.
ADMIN-0004, REVISED 10/21/08 \\Slsvr01\QA\FORMS\ST-LOUIS\ADMIN\Admin004 rev11.doc

SR
4-23

COVIDIEN

April 21, 2011

Mr. Doug Mendoza
Metropolitan St. Louis Sewer District
Department of Environmental Compliance
10 East Grand Avenue
St. Louis, MO 63147

Re: 2011 1st Quarter Self-Monitoring Report for Permit No. 21120596 - 3

Dear Mr. Mendoza,

Please find enclosed the 2011 1st Quarter Self Monitoring report for Mallinckrodt Inc.

The following sample points received no pharmaceutical process water flow during the first quarter: SP008, SP011 and SP935.

CT Excavation activities commenced during the first quarter and there were discharges under the Special Discharge Permits issued for wastewater generated from CT remediation activities and roll-off boxes dated January 19 and January 21, 2011. A summary of the discharges is provided in the Industrial User Radioactive Discharge Report included in this submittal.

If you have any questions or require more detailed information, please contact me at 314.654.1969.

Sincerely,

Julie Summers

Julie Summers
Environmental Manager

ENCLOSURES

RECEIVED
APR 22 2011
DIVISION OF
ENVIRONMENTAL COMPLIANCE

COVIDIEN/MALLINCKRODT
3600 NORTH SECOND STREET
ST. LOUIS, MO 63147

TELEPHONE: 314-654-2000
FAX: 314-654-1251

METROPOLITAN ST. LOUIS SEWER DISTRICT
INDUSTRIAL USER RADIOACTIVE MATERIALS DISCHARGE REPORT

PART I: IDENTIFYING INFORMATION

Company Name: Mallinckrodt

Permit No: 2112059600-3

Premise Address: 3600 N Second St. St. Louis, MO 63147

Reporting Period: ☒(JAN-MAR) ☐(APR-JUNE) ☐(JULY-SEPT) ☐(OCT-DEC)

PART II: RECORD OF DISPOSAL OF RADIOACTIVE MATERIALS TO THE SEWER SYSTEM

RADIONUCLIDE	ACTIVITY DISCHARGED (millicuries)
Ur-234	1.85×10^{-3}
Ur-235	1.16×10^{-4}
Ur-238	1.85×10^{-3}
Ra-226	7.25×10^{-4}
Ra-228	4.15×10^{-4}
Th-228	3.80×10^{-5}
Th-230	8.25×10^{-5}
Th-232	3.80×10^{-5}
TOTAL ACTIVITY DISCHARGED:	5.12×10^{-3}

PART III: CERTIFICATION STATEMENTS

Place your initials in the box under item A.
Everyone must complete the information under items A & B and sign this report.

(A) CERTIFICATION OF COMPLIANCE WITH STATE AND FEDERAL REGULATIONS

[JM] I certify that to the best of my knowledge & belief, all requirements of 10 CFR Part 20.2003 and 19 CSR Part 20-10.090 governing disposal by release into sanitary sewage of material regulated by the Nuclear Regulatory Commission and the Missouri Department of Health, respectively, have been met for the period covered by this report.

RECEIVED
APR 22 2011
DIVISION OF ENVIRONMENTAL COMPLIANCE

B. RADIOACTIVE MATERIALS DISCHARGE REPORT CERTIFICATION

I certify under penalty of Law that this document and all attachments were prepared under my direction or supervision in accordance with a system designed to assure that qualified personnel properly gather and evaluate the information submitted. Based on my inquiry of the person or persons who manage the system, or those persons directly responsible for gathering the information, the information submitted is, to the best of my knowledge and belief, true, accurate, and complete. I am aware that there are significant penalties for submitting false information, including the possibility of fine and imprisonment for knowing violations.

Print/type name of signing official: James Walter

Title: Site Director Telephone: 314-654-1300

Signature: Date: 4/20/11

radrpt.doc 2/00

PART III: SPECIAL CERTIFICATION STATEMENTS

Based on the special conditions contained in your discharge permit you may be required to certify the following. Please review your permit and **PLACE YOUR INITIALS ON THE LINES NEXT TO THE CERTIFICATIONS.**

A	NO CHANGE IN WASTEWATER DISCHARGE AT SAMPLE POINTS WITH NO MONITORING REQUIRED
	For permit special conditions that waive monitoring at any sample point(s) specified in your permit, you are required to make the following certification for each report in which monitoring is waived:
	_____ I certify, since the last discharge monitoring report, there has been no change in the character of the wastes discharged at sample points 001 and 002.
	_____ I certify, since the last discharge monitoring report, there has been no discharge from sample points 008 and 011.
B	NO CHANGE IN WASTEWATER DISCHARGE AT ACTIVE CONNECTIONS WITHOUT SAMPLE POINTS
	For permit special conditions that waive monitoring at active connection points which are not specified as sample points in your permit, you are required to make the following certification:
	_____ I certify, since the last discharge monitoring report, there has been no change in the character of wastes discharged at those active connection points which are not specified in my permit.
E	NO DISCHARGE OF CATEGORICAL WASTE
	For permit special conditions that prohibit discharge of wastes which are subject to certain categorical pretreatment standards, you are required to make the following certification:
	_____ I certify, since the last discharge monitoring report, there has been no discharge of wastes which are subject to pretreatment standards in 40 CFR 414 (except for those wastes conveyed by SP 905).
F	CYANIDE NOT USED OR GENERATED IN 40 CFR 439 OPERATIONS
	Discharges subject to Pharmaceutical Categorical Standards (40 CFR 439) can be exempted from limitations and monitoring for Total Cyanide at the Pharmaceutical sample points 080, 915, 920, 935, 936, and 937, subject to the following certification:
	_____ I certify, since the last discharge monitoring report, cyanide has not been used or generated in any pharmaceutical manufacturing process subject to Categorical Standards in 40 CFR 439.
H	PHARMACEUTICAL POLLUTANTS NOT USED OR GENERATED IN 40 CFR 439 OPERATIONS
	Discharges subject to Pharmaceutical Categorical Standards (40 CFR 439) can be exempted from monitoring for certain 40 CFR 439-regulated pollutants at the Pharmaceutical sample points 915, 935, and 936, subject to the following certification:
	_____ I certify, since the last discharge monitoring report, the 40 CFR 439-regulated pollutants, as determined in permittee's report dated April 5, 2010, have not been used or generated in any pharmaceutical manufacturing process subject to Categorical Standards in 40 CFR 439. In addition, the above-referenced report remains valid.
I	SURROGATE MONITORING ALLOWED FOR 40 CFR 439 OPERATIONS
	Discharges subject to Pharmaceutical Categorical Standards (40 CFR 439) can be exempted from monitoring for certain 40 CFR 439-regulated pollutants, and replaced by monitoring for surrogate pollutant(s), at the Pharmaceutical sample points 920 and 937 subject to the following certification:
	_____ I certify, since the last discharge monitoring report, the 40 CFR 439-regulated pollutants, as determined in permittee's report dated April 5, 2010, continue to receive the same degree of treatment as the surrogate pollutant(s). In addition, the above-referenced report remains valid.

PART IV: GENERAL CERTIFICATION STATEMENTS

B	DISCHARGE MONITORING REPORT CERTIFICATION
	All permittees must sign and complete the information below:
	I certify under penalty of Law that this document and all attachments were prepared under my direction or supervision in accordance with a system designed to assure that qualified personnel properly gather and evaluate the information submitted. Based on my inquiry of the person or persons who manage the system, or those persons directly responsible for gathering the information, the information submitted is, to the best of my knowledge and belief, true, accurate, and complete. I am aware that there are significant penalties for submitting false information, including the possibility of fine and imprisonment for knowing violations.
	Print or type name of signing official: James Walter
	Title: Site Director Telephone: 314-654-1300
	Signature: _____ Date: 4/20/11

RECEIVED
APR 22 2011
DIVISION OF
ENVIRONMENTAL COMPLIANCE

METROPOLITAN ST. LOUIS SEWER DISTRICT
2011 INDUSTRIAL USER SELF MONITORING REPORT

PART I: IDENTIFYING INFORMATION

Company Name: **Mallinckrodt Inc.**

Permit No.: 2112059600 - 3 Effective Date: 06-01-2010 Expiration Date: 05-31-2015

Premise Address: 3600 North Second St., St. Louis, MO 63147

Monitoring Period: __X___(JAN-MAR) ____(APR-JUNE) ____(JULY-SEPT) _____(OCT-DEC)

Samples Collected By: Mallinckrodt Inc

Analysis Performed By: Teklab

Part II: ANALYTICAL RESULTS OF SELF MONITORING

MSD SAMPLE POINT REFERENCE NUMBERS	----->		**001**						
DATES ON WHICH SAMPLES WERE COLLECTED	----->		NA						
TIMES AT WHICH SAMPLES WERE COLLECTED	----->								
PARAMETER	LIMIT	**RECORD SAMPLE TYPES (G,C,M OR E) & RESULTS BELOW** G=grab,C=composite,M=measured flow,E=estimated flo							UNITS
FLOW		E	1,000						gal/day
NO MONITORING REQUIRED (Sanitary Only)									
There have been no change in the character of the wastes discharged since the last report.									

RECEIVED

APR 22 2011

DIVISION OF
ENVIRONMENTAL COMPLIANCE

METROPOLITAN ST. LOUIS SEWER DISTRICT
2011 INDUSTRIAL USER SELF MONITORING REPORT

PART I: IDENTIFYING INFORMATION

Company Name: **Mallinckrodt Inc.**

Permit No.: 2112059600 - 3 Effective Date: 06-01-2010 Expiration Date: 05-31-2015

Premise Address: 3600 North Second St., St. Louis, MO 63147

Monitoring Period: __X__(JAN-MAR) ____(APR-JUNE) ____(JULY-SEPT) ____(OCT-DEC)

Samples Collected By: Mallinckrodt Inc

Analysis Performed By: Teklab

Part II: ANALYTICAL RESULTS OF SELF MONITORING

MSD SAMPLE POINT REFERENCE NUMBERS	---->		**002**						
DATES ON WHICH SAMPLES WERE COLLECTED	---->		NA						
TIMES AT WHICH SAMPLES WERE COLLECTED	---->								
PARAMETER	LIMIT	**RECORD SAMPLE TYPES (G,C,M OR E) & RESULTS BELOW** G=grab,C=composite,M=measured flow,E=estimated flo							UNITS
FLOW		E	2,200						gal/day
NO MONITORING REQUIRED (Sanitary Only)									
There have been no change in the character of the wastes discharged since the last report.									

RECEIVED
APR 2 2 2011
DIVISION OF
ENVIRONMENTAL COMPLIANCE

METROPOLITAN ST. LOUIS SEWER DISTRICT
2011 INDUSTRIAL USER SELF MONITORING REPORT

PART I: IDENTIFYING INFORMATION

Company Name: **Mallinckrodt Inc.**

Permit No.: 2112059600 - 3 Effective Date: 06-01-2010 Expiration Date: 05-31-2015

Premise Address: 3600 North Second St., St. Louis, MO 63147

Monitoring Period: __X__(JAN-MAR) ____(APR-JUNE) ____(JULY-SEPT) ____(OCT-DEC)

Samples Collected By: Mallinckrodt

Analysis Performed By: TEKLAB

Part II: ANALYTICAL RESULTS OF SELF MONITORING

		✓		✓		✓		
MSD SAMPLE POINT REFERENCE NUMBERS	----->		**003**		**009**		**099**	
DATES ON WHICH SAMPLES WERE COLLECTED	----->		2/14/2011		2/14/2011		calculated	
TIMES AT WHICH SAMPLES WERE COLLECTED	----->		0720, 0820, 0920, 1020		0740, 0840, 0940, 1040		n/a	
PARAMETER	LIMIT	**RECORD SAMPLE TYPES (G,C,M OR E) & RESULTS BELOW** G=grab,C=composite,M=measured flow,E=estimated flow						UNITS
FLOW		M	76,810	M	64,195	E	12,615	gal/day
Oil & Grease	200	G	5	G	5	E	5	mg/l
Biochemical Oxygen Demand	****	C	11	C	19	E	0*	mg/l
Chemical Oxygen Demand	****	C	32	C	59	E	0*	mg/l
Total Suspended Solids	****	C	26	C	12	E	97	mg/l
Temperature	****	G	6.1	G	4.4	E	15	deg C
pH	****	G	6.0	G	6.0	E	6.0	S.U.
**** No limits for SP003 or SP009;								
monitoring requirement only for calculation at SP099								
* Calculated value was less than zero.								
Lab Dilution Factor			1		1			

RECEIVED

APR 22 2011

DIVISION OF
ENVIRONMENTAL COMPLIANCE

METROPOLITAN ST. LOUIS SEWER DISTRICT
2011 INDUSTRIAL USER SELF MONITORING REPORT

PART I: IDENTIFYING INFORMATION

Company Name: **Mallinckrodt Inc.**

Permit No.: 2112059600 - 3 Effective Date: 06-01-2010 Expiration Date: 05-31-2015

Premise Address: 3600 North Second St., St. Louis, MO 63147

Monitoring Period: __X__(JAN-MAR) ____(APR-JUNE) ____(JULY-SEPT) ____(OCT-DEC)

Samples Collected By: Mallinckrodt

Analysis Performed By: TEKLAB

Part II: ANALYTICAL RESULTS OF SELF MONITORING

MSD SAMPLE POINT REFERENCE NUMBERS	----->		**005**					
DATES ON WHICH SAMPLES WERE COLLECTED	----->		2/14/2011					
TIMES AT WHICH SAMPLES WERE COLLECTED	----->		0730, 0830, 0930, 1030					
PARAMETER	LIMIT	**RECORD SAMPLE TYPES (G,C,M OR E) & RESULTS BELOW** G=grab,C=composite,M=measured flow,E=estimated flo						UNITS
FLOW		E	32,000					gal/day
Oil & Grease	200	G	5					mg/l
Biochemical Oxygen Demand	****	C	44					mg/l
Chemical Oxygen Demand	****	C	138					mg/l
Total Suspended Solids	****	C	14					mg/l
Temperature	60	G	28					deg C
pH	5.5 - 11.5	G	7.0					S.U.
Lab Dilution Factor			1					

RECEIVED

APR 22 2011

DIVISION OF
ENVIRONMENTAL COMPLIANCE

METROPOLITAN ST. LOUIS SEWER DISTRICT
2011 INDUSTRIAL USER SELF MONITORING REPORT

PART I: IDENTIFYING INFORMATION

Company Name: **Mallinckrodt Inc.**

Permit No.: 2112059600 - 3 Effective Date: 06-01-2010 Expiration Date: 05-31-2015

Premise Address: 3600 North Second St., St. Louis, MO 63147

Monitoring Period: __X__(JAN-MAR) ____(APR-JUNE) ____(JULY-SEPT) ____(OCT-DEC)

Samples Collected By: Mallinckrodt

Analysis Performed By: TEKLAB

Part II: ANALYTICAL RESULTS OF SELF MONITORING

MSD SAMPLE POINT REFERENCE NUMBERS	----->		**008**							
DATES ON WHICH SAMPLES WERE COLLECTED	----->									
TIMES AT WHICH SAMPLES WERE COLLECTED	----->									
PARAMETER	LIMIT	**RECORD SAMPLE TYPES (G,C,M OR E) & RESULTS BELOW** G=grab,C=composite,M=measured flow,E=estimated flo								UNITS
FLOW		E	*							gal/day
Oil & Grease	200	G								mg/l
Biochemical Oxygen Demand	****	G								mg/l
Chemical Oxygen Demand	****	G								mg/l
Temperature	60	G								deg C
Total Suspended Solids	****	G								mg/L
pH	5.5 - 11.5	G								S.U.
* No flow during this reporting period.										
Lab Dilution Factor										

RECEIVED
APR 22 2011
DIVISION OF
ENVIRONMENTAL COMPLIANCE

METROPOLITAN ST. LOUIS SEWER DISTRICT
2011 INDUSTRIAL USER SELF MONITORING REPORT

PART I: IDENTIFYING INFORMATION

Company Name: **Mallinckrodt Inc.**

Permit No.: 2112059600 - 3 Effective Date: 06-01-2010 Expiration Date: 05-31-2015

Premise Address: 3600 North Second St., St. Louis, MO 63147

Monitoring Period: ___X_(JAN-MAR) ____(APR-JUNE) ____(JULY-SEPT) _____(OCT-DEC)

Samples Collected By: Mallinckrodt

Analysis Performed By: TEKLAB

Part II: ANALYTICAL RESULTS OF SELF MONITORING

MSD SAMPLE POINT REFERENCE NUMBERS	----->		**010**						
DATES ON WHICH SAMPLES WERE COLLECTED	----->		2/14/2011						
TIMES AT WHICH SAMPLES WERE COLLECTED	----->		0750, 0850, 0950, 1050						
PARAMETER	LIMIT	**RECORD SAMPLE TYPES (G,C,M OR E) & RESULTS BELOW** G=grab,C=composite,M=measured flow,E=estimated flo							UNITS
FLOW		E	1,142,913						gal/day
Oil & Grease	200	G	2						mg/l
Biochemical Oxygen Demand	****	C	122						mg/l
Chemical Oxygen Demand	****	C	741						mg/l
Total Suspended Solids	****	C	116						mg/l
Temperature	60	G	18.3						deg C
pH	5.5 - 11.5	G	see attached						S.U.
Chromium	5.0	C	0.005						mg/l
Copper	2.7	C	0.016						mg/l
Nickel	2.3	C	0.011						mg/l
Zinc	3.0	C	0.032						mg/l
Lab Dilution Factor			1						

RECEIVED
APR 22 2011
DIVISION OF
ENVIRONMENTAL COMPLIANCE

Mallinckrodt pH Monitoring for SP010: January 2011

Date / Time	pH	Total for Event in Minutes
1/1/11 8:15	11.7	5
1/1/11 10:50	5.5	5
1/6/11 7:05	5.2	5
1/6/11 7:20	3.6	5
1/6/11 14:20	11.5	5
1/7/11 7:40	5.4	5
1/8/11 15:25	5.3	5
1/8/11 15:35	4.9	5
1/10/11 11:05	11.6	5
1/13/11 16:10	4.3	5
1/14/11 4:15	5.3	5
1/14/11 6:25	5.1	5
1/14/11 8:05	4.5	10
1/17/11 8:00	5.4	
1/17/11 23:30	5.3	5
1/18/11 10:05	4.3	5
1/21/11 11:25	5.4	10
1/21/11 11:30	5.2	
1/23/11 11:55	11.6	5
1/24/11 9:35	5.4	5
1/27/11 4:30	4.0	55
1/27/11 4:35	4.2	
1/27/11 4:40	5.4	
1/27/11 4:55	4.9	
1/27/11 5:00	4.7	
1/27/11 5:05	4.9	
1/27/11 5:10	5.2	
1/27/11 5:15	5.2	
1/27/11 5:20	5.1	
1/27/11 5:25	5.2	
1/27/11 5:40	5.1	5
1/27/11 6:15	5.4	10
1/27/11 6:20	5.2	
1/27/11 6:30	5.1	10
1/27/11 6:35	5.0	
1/27/11 6:50	5.4	35
1/27/11 6:55	5.5	
1/27/11 7:00	12.9	
1/27/11 7:05	13.4	
1/27/11 7:10	13.7	
1/27/11 7:15	3.8	
1/27/11 7:20	4.5	
1/28/11 19:05	11.5	5
	January Total:	**220**

RECEIVED

APR 22 2011

DIVISION OF
ENVIRONMENTAL COMPLIANCE

Mallinckrodt pH Monitoring for SP010: February 2011

Date / Time	pH	Total for Event in Minutes
2/4/11 23:35	11.5	10
2/4/11 23:40	11.8	
2/6/11 3:00	5.4	10
2/6/11 3:05	5.2	
2/6/11 5:25	4.6	5
2/7/11 3:35	5.4	5
2/7/11 8:25	4.0	5
2/7/11 14:15	4.2	5
2/11/11 13:30	3.2	5
2/18/11 13:40	4.3	5
2/24/11 8:45	4.6	5
	February Total:	**55**

Mallinckrodt pH Monitoring for SP010: March 2011

Date / Time	pH	Total for Event in Minutes
9/3/09 18:15	4.6	5
9/3/09 18:20	4.0	5
	March Total:	**10**

RECEIVED

APR 2 2 2011

DIVISION OF
ENVIRONMENTAL COMPLIANCE

METROPOLITAN ST. LOUIS SEWER DISTRICT
2011 INDUSTRIAL USER SELF MONITORING REPORT

PART I: IDENTIFYING INFORMATION

Company Name: **Mallinckrodt Inc.**

Permit No.: 2112059600 - 3 Effective Date: 06-01-2010 Expiration Date: 05-31-2015

Premise Address: 3600 North Second St., St. Louis, MO 63147

Monitoring Period: _X__(JAN-MAR) ____(APR-JUNE) ____(JULY-SEPT) ____(OCT-DEC)

Samples Collected By: Mallinckrodt

Analysis Performed By: TEKLAB

Part II: ANALYTICAL RESULTS OF SELF MONITORING

MSD SAMPLE POINT REFERENCE NUMBERS	----->	011						
DATES ON WHICH SAMPLES WERE COLLECTED	----->							
TIMES AT WHICH SAMPLES WERE COLLECTED	----->							
PARAMETER	LIMIT	RECORD SAMPLE TYPES (G,C,M OR E) & RESULTS BELOW G=grab,C=composite,M=measured flow,E=estimated flo						UNITS
FLOW		E	*					gal/day
Oil & Grease	200	G						mg/l
Biochemical Oxygen Demand	****	G						mg/l
Chemical Oxygen Demand	****	G						mg/l
Total Suspended Solids	****	G						mg/l
Temperature	60	G						deg C
pH	5.5 - 11.5	G						S.U.
* No flow during this reporting period.								
Lab Dilution Factor			1					

RECEIVED
APR 22 2011
DIVISION OF
ENVIRONMENTAL COMPLIANCE

METROPOLITAN ST. LOUIS SEWER DISTRICT
2011 INDUSTRIAL USER SELF MONITORING REPORT

PART I: IDENTIFYING INFORMATION

Company Name: **Mallinckrodt Inc.**

Permit No.: 2112059600 - 3 Effective Date: 06-01-2010 Expiration Date: 05-31-2015

Premise Address: 3600 North Second St., St. Louis, MO 63147
Monitoring Period: __X__(JAN-MAR) ____(APR-JUN) ____(JULY-SEP) ____(OCT-DEC)
Samples Collected By: Mallinckrodt Inc
Analysis Performed By: TEKLAB

Part II: ANALYTICAL RESULTS OF SELF MONITORING

MSD SAMPLE POINT REFERENCE NUMBERS					**080**						
DATES ON WHICH SAMPLES WERE COLLECTED					1/18/2011						
TIMES AT WHICH SAMPLES WERE COLLECTED					920, 1020, 1130, 1240						
PARAMETER	EPA METHOD	DAILY MAX	AVG MONTHLY	**RECORD SAMPLE TYPES (G, C, M OR E) & RESULTS** G=Grab, C-composite, M=measured flow, E=estimated							UNITS
FLOW				E	3,500						gal/day
Acetone	524.2	20.70	8.20	G	<1.000						mg/L
n-Amyl Acetate	1666	20.70	8.20	G	<0.100						mg/L
Benzene	524.2	3.00	0.70	G	0.050						mg/L
n-Butyl acetate	1666	20.70	8.20	G	<0.100						mg/L
Chlorobenzene	524.2	3.00	0.70	G	<0.100						mg/L
Chloroform	524.2	0.10	0.03	G	<0.02						mg/L
1,2-Dichlorobenzene	524.2	20.70	8.20	G	<0.100						mg/L
1,2-Dichloroethane	524.2	20.70	8.20	G	<0.100						mg/L
Diethyl amine	1671	255.00	100.00	G	<50						mg/L
Ethyl Acetate	1666	20.70	8.20	G	<0.200						mg/L
n-Heptane	1666	3.00	0.70	G	<0.200						mg/L
n-Hexane	1666	3.00	0.70	G	<0.200						mg/L
Isobutyraldehyde	1666	20.70	8.20	G	<0.200						mg/L
Isopropyl acetate	1666	20.70	8.20	G	<0.100						mg/L
Isopropyl ether	1666	20.70	8.20	G	<0.100						mg/L
Methylene chloride	524.2	3.00	0.70	G	<0.100						mg/L
Methyl formate	1666	20.70	8.20	G	<1.000						mg/L
4-Methyl-2-pentanone	1666	20.70	8.20	G	<0.200						mg/L
Tetrahydrofuran	1666	9.20	3.40	G	<0.400						mg/L
Toluene	524.2	0.30	0.20	G	<0.100						mg/L
Triethyl amine	1671	255.00	100.00	G	<20						mg/L
Xylenes	1666	3.00	0.70	G	<0.100						mg/L
Oil & Grease	1664	200		G	<5						mg/L
Biochemical Oxygen Demand		****		C	<5						mg/L
Chemical Oxygen Demand		****		C	<50						mg/L
Total Suspended Solids		****		C	<6						mg/L
Temperature		60		G	5.3						deg C
pH		5.5 - 11.5		G	9.4						S.U.
Dilution by lab					1,20						

RECEIVED
APR 22 2011
DIVISION OF
ENVIRONMENTAL COMPLIANCE

METROPOLITAN ST. LOUIS SEWER DISTRICT
2011 INDUSTRIAL USER SELF MONITORING REPORT

PART I: IDENTIFYING INFORMATION

Company Name: **Mallinckrodt Inc.**

Permit No.: 2112059600 - 3 Effective Date: 06-01-2010 Expiration Date: 05-31-2015

Premise Address: 3600 North Second St., St. Louis, MO 63147

Monitoring Period: __X__(JAN-MAI _____ (APR-JUNE) _____(JULY-SEPT) ____(OCT-DEC)

Samples Collected By: Mallinckrodt

Analysis Performed By: TEKLAB

Part II: ANALYTICAL RESULTS OF SELF MONITORING

MSD SAMPLE POINT REFERENCE NUMBERS		----->>		**905**			
DATES ON WHICH SAMPLES WERE COLLECTED		----->>		3/2/2011			
TIMES AT WHICH SAMPLES WERE COLLECTED		----->>		13:00			
PARAMETER	MONTHLY LIMIT (ave) (gm/day)	DAILY MAX LIMIT (gm/day)	**RECORD SAMPLE TYPES (G,C,M OR E) & RESULTS BELOW** G=grab,C=composite,M=measured flow,E=estimated flow		Lab results mg/L		UNITS
FLOW			M	49487			gal/day
1,2,4-Trichlorobenzene	74	301	G	15.73	0.084		gm/day
1,2-Dichlorobenzene	74	301	G	0.94	0.005		gm/day
1,3-Dichlorobenzene	54	144	G	0.94	0.005		gm/day
1,4-Dichlorobenzene	54	144	G	0.94	0.005		gm/day
2-Nitrophenol	25	87	G	15.73	0.084		gm/day
2-Methyl-4,6-dinitrophenol	30	105	G	15.73	0.084		gm/day
4-Nitrophenol	61	218	G	31.47	0.168		gm/day
Acenapthene	7	18	G	1.50	0.008		gm/day
Anthracene	7	18	G	1.50	0.008		gm/day
Bis(2-ethylhexyl)phthalate	36	98	G	9.37	0.050		gm/day
Diethyl phthalate	17	43	G	15.73	0.084		gm/day
Dimethyl phthalate	7	18	G	1.50	0.008		gm/day
Di-n-butyl phthalate	8	16	G	1.50	0.008		gm/day
Fluoranthene	8	20	G	1.50	0.008		gm/day
Fluorene	7	18	G	1.50	0.008		gm/day
Hexachlorobenzene	74	301	G	15.73	0.084		gm/day
Hexachlorobutadiene	54	144	G	15.73	0.084		gm/day
Hexachloroethane	74	301	G	15.73	0.084		gm/day
Naphthalene	7	18	G	1.50	0.008		gm/day
Phenanthrene	7	18	G	1.50	0.008		gm/day
Pyrene	8	18	G	1.50	0.008		gm/day
1,1,1-Trichloroethane	8	22	G	0.94	0.005		gm/day
1,1,2-Trichloroethane	12	48	G	0.94	0.005		gm/day
1,1-Dichloroethane	8	22	G	0.94	0.005		gm/day
1,1-Dichloroethene	8	23	G	0.94	0.005		gm/day
1,2-Dichloroethane	74	301	G	0.94	0.005		gm/day
1,2-Dichloropropane	74	301	G	0.94	0.005		gm/day
Benzene	22	51	G	0.37	0.002		gm/day
Carbon Tetrachloride	54	144	G	0.94	0.005		gm/day
Chlorobenzene	54	144	G	0.94	0.005		gm/day
Chloroethane	42	112	G	1.87	0.010		gm/day
Chloroform	42	123	G	0.26	0.001		gm/day
Chloromethane	42	112	G	1.87	0.010		gm/day
cis-1,3-Dichloropropene	74	301	G	0.94	0.005		gm/day
Ethylbenzene	54	144	G	0.94	0.005		gm/day
Methylene Chloride	14	64	G	0.94	0.005		gm/day
Nitrobenzene	847	2423	G	15.73	0.084		gm/day
Tetrachloroethene	20	62	G	0.94	0.005		gm/day
Toluene	11	28	G	0.94	0.005		gm/day
trans-1,2-Dichloroethene	9	25	G	0.94	0.005		gm/day
trans-1,3-Dichloropropene	74	301	G	0.94	0.005		gm/day
Trichloroethene	10	26	G	0.94	0.005		gm/day
Vinyl Chloride	37	65	G	0.37	0.002		gm/day
Shaded values represent detection limits							
Lab Dilution Factor				1,10			

RECEIVED
APR 22 2011
DIVISION OF
ENVIRONMENTAL COMPLIANCE

METROPOLITAN ST. LOUIS SEWER DISTRICT
2011 INDUSTRIAL USER SELF MONITORING REPORT

PART I: IDENTIFYING INFORMATION

Company Name: **Mallinckrodt Inc.**

Permit No.: 2112059600 - 3 Effective Date: 06-01-2010 Expiration Date: 05-31-2015

Premise Address: 3600 North Second St., St. Louis, MO 63147

Monitoring Period: __X___(JAN-MAR) ____(APR-JUNE) ____(JULY-SEPT) ____(OCT-DEC)

Samples Collected By: Mallinckrodt Inc

Analysis Performed By: TEKLAB

Part II: ANALYTICAL RESULTS OF SELF MONITORING

MSD SAMPLE POINT REFERENCE NUMBERS	----->>		**912**		**912**		**912**	
DATES ON WHICH SAMPLES WERE COLLECTED	----->>		1/3/2011		2/7/2011		3/7/2011	
TIMES AT WHICH SAMPLES WERE COLLECTED	----->>		0600		900		0615	
PARAMETER	LIMIT	**RECORD SAMPLE TYPES (G,C,M OR E) & RESULTS BELOW** G=grab,C=composite,M=measured flow,E=estimated flo						UNITS
FLOW		M	74406	M	89213	M	86165	gal/day
DMAC (daily max)	7091	C	1137	C	1061	C	1244	lb/day
DMAC (monthly average)	5459	C	1137	C	1061	C	1244	lb/day
			1831		1425		1730	mg/L
Lab Dilution Factor			1		1		1	

$\frac{10^6 \text{ mg}}{1 \text{ kg}}$ $\frac{0.4536 \text{ kg}}{\text{lb}}$ $\frac{1244 \text{ lb}}{\text{day}}$ $\frac{\text{day}}{86165 \text{ gal}}$ $\frac{1 \text{ gal}}{3.785 \text{ L}} = \frac{\text{mg}}{\text{L}}$ 1730

$119{,}841 \times \frac{\text{LB}}{\text{gal}}$

RECEIVED
APR 22 2011
DIVISION OF
ENVIRONMENTAL COMPLIANCE

METROPOLITAN ST. LOUIS SEWER DISTRICT
2011 INDUSTRIAL USER SELF MONITORING REPORT

PART I: IDENTIFYING INFORMATION

Company Name: **MALLINCKRODT INC.**
Permit No.: 2112059600 - 3 Effective Date: 06-01-2010 Expiration Date: 05-31-2015
Premise Address: 3600 North Second St., St. Louis, MO 63147
Monitoring Period: __X__(JAN-MAR) ____(APR-JUN) _____(JULY-SEP) ____(OCT-DEC)
Samples Collected By: Mallinckrodt Inc
Analysis Performed By: TEKLAB

Part II: ANALYTICAL RESULTS OF SELF MONITORING

MSD SAMPLE POINT REFERENCE NUMBERS			---->		**915**				
DATES ON WHICH SAMPLES WERE COLLECTED			---->		1/5/2011				
TIMES AT WHICH SAMPLES WERE COLLECTED			---->		0840				
PARAMETER	EPA METHOD	DAILY MAX	AVG MONTHLY	**RECORD SAMPLE TYPES (G, C, M OR E) & RESULTS BELOW** G=Grab, C-composite, M=measured flow, E=estimated flow					UNITS
FLOW				E	2,700				gal/day
Acetone	524.2	20.70	8.20	G	0.110				mg/L
n-Amyl acetate	1666	20.70	8.20	G	<0.100				mg/L
Benzene	524.2	3.00	0.70	G	<0.100				mg/L
n-Butyl acetate	1666	20.70	8.20	G	<0.100				mg/L
Chlorobenzene	524.2	3.00	0.70	G	<0.100				mg/L
Chloroform	524.2	0.10	0.03	G	<0.020				mg/L
1,2-Dichlorobenzene	524.2	20.70	8.20	G	<0.100				mg/L
1,2-Dichloroethane	524.2	20.70	8.20	G	<0.100				mg/L
Diethyl amine	1671	255.00	100.00	G	*				mg/L
Ethyl Acetate	1666	20.70	8.20	G	<0.200				mg/L
n-Heptane	1666	3.00	0.70	G	<0.200				mg/L
n-Hexane	1666	3.00	0.70	G	<0.200				mg/L
Isobutyraldehyde	1666	20.70	8.20	G	0.033				mg/L
Isopropyl acetate	1666	20.70	8.20	G	<0.100				mg/L
Isopropyl ether	1666	20.70	8.20	G	<0.100				mg/L
Methylene chloride	524.2	3.00	0.70	G	<0.100				mg/L
Methyl formate	1666	20.70	8.20	G	<1				mg/L
4-Methyl-2-pentanone	1666	20.70	8.20	G	<0.200				mg/L
Tetrahydrofuran	1666	9.20	3.40	G	<0.400				mg/L
Toluene	524.2	0.30	0.20	G	<0.100				mg/L
Triethyl amine	1671	255.00	100.00	G	*				mg/L
Xylenes	1666	3.00	0.70	G	<0.100				mg/L
** Annual monitoring requirement.*									
Dilution by lab					20				

RECEIVED
APR 22 2011
DIVISION OF
ENVIRONMENTAL COMPLIANCE

METROPOLITAN ST. LOUIS SEWER DISTRICT
2011 INDUSTRIAL USER SELF MONITORING REPORT

PART I: IDENTIFYING INFORMATION

Company Name: **MALLINCKRODT INC.**
Permit No.: 2112059600 - 3 Effective Date: 06-01-2010 Expiration Date: 05-31-15
Premise Address: 3600 North Second St., St. Louis, MO 63147
Monitoring Period: __X__(JAN-MAR) ____(APR-JUN) ____(JULY-SEP) ____(OCT-DEC)
Samples Collected By: Mallinckrodt Inc
Analysis Performed By: TEKLAB

Part II: ANALYTICAL RESULTS OF SELF MONITORING

MSD SAMPLE POINT REFERENCE NUMBERS			---->		**920**				
DATES ON WHICH SAMPLES WERE COLLECTED			---->		3/11/2011				
TIMES AT WHICH SAMPLES WERE COLLECTED			---->		11:30				
PARAMETER	EPA METHOD	DAILY MAX	AVG MONTHLY	**RECORD SAMPLE TYPES (G, C, M OR E) & RESULTS BELOW** G=Grab, C-composite, M=measured flow,					UNITS
FLOW				M	17,777	E			gal/day
Tetrahydrofuran	1666	9.20	3.40	G	<0.400	G			mg/L
Toluene	524.2	0.30	0.20	G	<0.100	G			mg/L
Dilution by lab					20				

RECEIVED
APR 2 2 2011
DIVISION OF
ENVIRONMENTAL COMPLIANCE

METROPOLITAN ST. LOUIS SEWER DISTRICT
2011 INDUSTRIAL USER SELF MONITORING REPORT

PART I: IDENTIFYING INFORMATION

Company Name: **MALLINCKRODT INC.**
Permit No.: 2112059600 - 3 Effective Date: 06-01-2010 Expiration Date: 05-31-2015
Premise Address: 3600 North Second St., St. Louis, MO 63147
Monitoring Period: __X__(JAN-MAR) ____(APR-JUN) ____(JULY-SEP) ___(OCT-DEC)
Samples Collected By: Mallinckrodt Inc
Analysis Performed By: TEKLAB

Part II: ANALYTICAL RESULTS OF SELF MONITORING

MSD SAMPLE POINT REFERENCE NUMBERS			---->		**927**					
DATES ON WHICH SAMPLES WERE COLLECTED			---->		1/5/2011					
TIMES AT WHICH SAMPLES WERE COLLECTED			---->		12:00					
PARAMETER	EPA METHOD	DAILY MAX	AVG MONTHLY	**RECORD SAMPLE TYPES (G, C, M OR E) & RESULTS BELOW** G=Grab, C-composite, M=measured flow,						UNITS
FLOW				E	2,700					gal/day
Acetone	524.2	20.70	8.20	G	<1					mg/L
n-Amyl acetate	1666	20.70	8.20	G	<0.100					mg/L
Ethyl Acetate	1666	20.70	8.20	G	<0.200					mg/L
Isopropyl acetate	1666	20.70	8.20	G	<0.100					mg/L
Methylene chloride	524.2	3.00	0.70	G	<0.100					mg/L
Dilution by lab					20					

RECEIVED
APR 22 2011
DIVISION OF
ENVIRONMENTAL COMPLIANCE

METROPOLITAN ST. LOUIS SEWER DISTRICT
2011 INDUSTRIAL USER SELF MONITORING REPORT

PART I: IDENTIFYING INFORMATION

Company Name: **MALLINCKRODT INC.**
Permit No.: 2112059600 - 3 Effective Date: 06-01-2010 Expiration Date: 05-31-2015
Premise Address: 3600 North Second St., St. Louis, MO 63147
Monitoring Period: __X__(JAN-MAR) ____(APR-JUN) ____(JULY-SEP) _____(OCT-DEC)
Samples Collected By: Mallinckrodt Inc
Analysis Performed By: TEKLAB

Part II: ANALYTICAL RESULTS OF SELF MONITORING

MSD SAMPLE POINT REFERENCE NUMBERS			---->		**930**						
DATES ON WHICH SAMPLES WERE COLLECTED			---->		1/24/2011						
TIMES AT WHICH SAMPLES WERE COLLECTED			---->		0830						
PARAMETER	EPA METHOD	DAILY MAX	AVG MONTHLY	**RECORD SAMPLE TYPES (G, C, M OR E) & RESULTS BELOW** G=Grab, C-composite, M=measured flow, E=estimated flow							UNITS
FLOW				E	650						gal/day
Acetone	524.2	20.70	8.20	G	<1						mg/L
Ethyl Acetate	1666	20.70	8.20	G	<0.200						mg/L
Isopropyl acetate	1666	20.70	8.20	G	<0.100						mg/L
Methylene chloride	524.2	3.00	0.70	G	<0.100						mg/L
n-Amyl acetate	1666	20.70	8.20	G	<0.100						mg/L
Dilution by lab					20						

RECEIVED
APR 22 2011
DIVISION OF
ENVIRONMENTAL COMPLIANCE

METROPOLITAN ST. LOUIS SEWER DISTRICT
2011 INDUSTRIAL USER SELF MONITORING REPORT

PART I: IDENTIFYING INFORMATION

Company Name: **MALLINCKRODT INC.**
Permit No.: 2112059600 - 3 Effective Date: 06-01-2010 Expiration Date: 05-31-2015
Premise Address: 3600 North Second St., St. Louis, MO 63147
Monitoring Period: __X___(JAN-MAR) ____(APR-JUN) ____(JULY-SEP) ____(OCT-DEC)
Samples Collected By: Mallinckrodt Inc
Analysis Performed By: TEKLAB

Part II: ANALYTICAL RESULTS OF SELF MONITORING

MSD SAMPLE POINT REFERENCE NUMBERS			---->		**933**						
DATES ON WHICH SAMPLES WERE COLLECTED			---->		1/12/2011						
TIMES AT WHICH SAMPLES WERE COLLECTED			---->		0810						
PARAMETER	EPA METHOD	DAILY MAX	AVG MONTHLY	**RECORD SAMPLE TYPES (G, C, M OR E) & RESULTS BELOW** G=Grab, C-composite, M=measured flow, E=estimated flow							UNITS
FLOW				E	100						gal/day
Acetone	524.2	20.70	8.20	G	0.260						mg/L
n-Amyl acetate	1666	20.70	8.20	G	<0.100						mg/L
Ethyl Acetate	1666	20.70	8.20	G	<0.200						mg/L
Isopropyl acetate	1666	20.70	8.20	G	<0.100						mg/L
Methylene chloride	524.2	3.00	0.70	G	<0.100						mg/L
Dilution by lab					20						

RECEIVED
APR 2 2 2011
DIVISION OF
ENVIRONMENTAL COMPLIANCE

METROPOLITAN ST. LOUIS SEWER DISTRICT
2011 INDUSTRIAL USER SELF MONITORING REPORT

PART I: IDENTIFYING INFORMATION

Company Name: **MALLINCKRODT INC.**

Permit No.: 2112059600 - 3 Effective Date: 06-01-2010 Expiration Date: 05-31-2015

Premise Address: 3600 North Second St., St. Louis, MO 63147

Monitoring Period: __X__(JAN-MAR) ____(APR-JUN) ____(JULY-SEP) ____(OCT-DEC)

Samples Collected By: Mallinckrodt Inc

Analysis Performed By: TEKLAB

Part II: ANALYTICAL RESULTS OF SELF MONITORING

MSD SAMPLE POINT REFERENCE NUMBERS			---->		**935**						
DATES ON WHICH SAMPLES WERE COLLECTED			---->								
TIMES AT WHICH SAMPLES WERE COLLECTED			---->								
PARAMETER	EPA METHOD	DAILY MAX	AVG MONTHLY	**RECORD SAMPLE TYPES (G, C, M OR E) & RESULTS BELOW** G=Grab, C-composite, M=measured flow, E=estimated flow							UNITS
FLOW				E	0						gal/day
Acetone	524.2	20.70	8.20	G	*						mg/L
Benzene	524.2	3.00	0.70	G	*						mg/L
Chlorobenzene	524.2	3.00	0.70	G	*						mg/L
Chloroform	524.2	0.10	0.03	G	*						mg/L
1,2-Dichlorobenzene	524.2	20.70	8.20	G	*						mg/L
1,2-Dichloroethane	524.2	20.70	8.20	G	*						mg/L
Ethyl Acetate	1666	20.70	8.20	G	*						mg/L
n-Hexane	1666	3.00	0.70	G	*						mg/L
Methylene chloride	524.2	3.00	0.70	G	*						mg/L
4-Methyl-2-pentanone	1666	20.70	8.20	G	*						mg/L
Tetrahydrofuran	1666	9.20	3.40	G	*						mg/L
Toluene	524.2	0.30	0.20	G	*						mg/L
Xylenes	1666	3.00	0.70	G	*						mg/L
Isobutyraldehyde	1666	20.70	8.20	G	*						mg/L
n-Amyl acetate	1666	20.70	8.20	G	*						mg/L
n-Butyl acetate	1666	20.70	8.20	G	*						mg/L
Isopropyl acetate	1666	20.70	8.20	G	*						mg/L
Isopropyl ether	1666	20.70	8.20	G	*						mg/L
n-Heptane	1666	3.00	0.70	G	*						mg/L
Methyl formate	1666	20.70	8.20	G	*						mg/L
Diethyl amine	1671	255.00	100.00	G	*						mg/L
Triethyl amine	1671	255.00	100.00	G	*						mg/L
**** No PEG flow this quarter***											
Dilution by lab											

RECEIVED

APR 2 2 2011

DIVISION OF
ENVIRONMENTAL COMPLIANCE

METROPOLITAN ST. LOUIS SEWER DISTRICT
2011 INDUSTRIAL USER SELF MONITORING REPORT

PART I: IDENTIFYING INFORMATION

Company Name: **MALLINCKRODT INC.**
Permit No.: 2112059600 - 3 Effective Date: 06-01-2010 Expiration Date: 05-31-2015
Premise Address: 3600 North Second St., St. Louis, MO 63147
Monitoring Period: __x__(JAN-MAR) _____(APR-JUN) ____(JULY-SEP) ___(OCT-DEC)
Samples Collected By: Mallinckrodt Inc
Analysis Performed By: TEKLAB

Part II: ANALYTICAL RESULTS OF SELF MONITORING

MSD SAMPLE POINT REFERENCE NUMBERS			---->		**936**					
DATES ON WHICH SAMPLES WERE COLLECTED			---->		1/4/2011					
TIMES AT WHICH SAMPLES WERE COLLECTED			---->		9:40					
PARAMETER	EPA METHOD	DAILY MAX	AVG MONTHLY	**RECORD SAMPLE TYPES (G, C, M OR E) &** G=Grab, C-composite, M=measured flow, E=estimated flow						UNITS
FLOW				E	16,500					gal/day
Acetone	524.2	20.70	8.20	G	<1					mg/L
n-Amyl acetate	1666	20.70	8.20	G	<0.100					mg/L
Benzene	524.2	3.00	0.70	G	<0.100					mg/L
n-Butyl acetate	1666	20.70	8.20	G	<0.100					mg/L
Chlorobenzene	524.2	3.00	0.70	G	<0.100					mg/L
Chloroform*	524.2	0.10	0.03	G	<0.020					mg/L
1,2-Dichlorobenzene	524.2	20.70	8.20	G	<0.100					mg/L
1,2-Dichloroethane	524.2	20.70	8.20	G	<0.100					mg/L
Diethyl amine	1671	255.00	100.00	G	**					mg/L
Ethyl Acetate	1666	20.70	8.20	G	<0.200					mg/L
n-Heptane	1666	3.00	0.70	G	<0.200					mg/L
n-Hexane	1666	3.00	0.70	G	<0.200					mg/L
Isobutyraldehyde	1666	20.70	8.20	G	<0.200					mg/L
Isopropyl acetate	1666	20.70	8.20	G	<0.100					mg/L
Isopropyl ether	1666	20.70	8.20	G	<0.100					mg/L
Methylene chloride	524.2	3.00	0.70	G	<0.100					mg/L
Methyl formate	1666	20.70	8.20	G	<1					mg/L
4-Methyl-2-pentanone	1666	20.70	8.20	G	<0.200					mg/L
Tetrahydrofuran	1666	9.20	3.40	G	<0.400					mg/L
Toluene	524.2	0.30	0.20	G	<0.100					mg/L
Triethyl amine	1671	255.00	100.00	G	**					mg/L
Xylenes	1666	3.00	0.70	G	<0.100					mg/L
* Chloroform Results	Raw Water	SP936								
1/4/2011	<0.020 mg/l	<0.020 mg/l								
Results above reported as the difference between SP936 and Raw Water.										
** Annual Sampling Requirement										
Dilution by lab					1, 20					

RECEIVED
APR 22 2011
DIVISION OF
ENVIRONMENTAL COMPLIANCE

METROPOLITAN ST. LOUIS SEWER DISTRICT
2011 INDUSTRIAL USER SELF MONITORING REPORT

PART I: IDENTIFYING INFORMATION

Company Name: **MALLINCKRODT INC.**
Permit No.: 2112059600 - 3 Effective Date: 06-01-2010 Expiration Date: 05-31-2015
Premise Address: 3600 North Second St., St. Louis, MO 63147
Monitoring Period: __X__(JAN-MAR) ____(APR-JUN) ____(JULY-SEP) ____(OCT-DEC)
Samples Collected By: Mallinckrodt Inc
Analysis Performed By: TEKLAB

Part II: ANALYTICAL RESULTS OF SELF MONITORING

MSD SAMPLE POINT REFERENCE NUMBERS			---->		**937**				
DATES ON WHICH SAMPLES WERE COLLECTED			---->		3/11/2011				
TIMES AT WHICH SAMPLES WERE COLLECTED			---->		11:45				
PARAMETER	EPA METHOD	DAILY MAX	AVG MONTHLY	**RECORD SAMPLE TYPES (G, C, M OR E) & RESULTS BELOW** G=Grab, C-composite, M=measured flow, E=estimated flow					UNITS
FLOW				M	35,429				gal/day
Tetrahydrofuran	524.2	9.20	3.40	G	<0.400				mg/L
Toluene	524.2	0.30	0.20	G	<0.100				mg/L
Dilution by lab					20				

RECEIVED
APR 22 2011
DIVISION OF
ENVIRONMENTAL COMPLIANCE

METROPOLITAN ST. LOUIS SEWER DISTRICT
2011 INDUSTRIAL USER SELF MONITORING REPORT

PART I: IDENTIFYING INFORMATION

Company Name: **MALLINCKRODT INC.**
Permit No.: 2112059600 - 3 Effective Date: 06-01-2010 Expiration Date: 05-31-2015
Premise Address: 3600 North Second St., St. Louis, MO 63147
Monitoring Period: ___X__(JAN-MAR) ____(APR-JUN) ____(JULY-SEP) ____(OCT-DEC)
Samples Collected By: Mallinckrodt Inc
Analysis Performed By: TEKLAB

Part II: ANALYTICAL RESULTS OF SELF MONITORING

MSD SAMPLE POINT REFERENCE NUMBERS			---->		**938**						
DATES ON WHICH SAMPLES WERE COLLECTED			---->		1/25/2011						
TIMES AT WHICH SAMPLES WERE COLLECTED			---->		08:00						
PARAMETER	EPA METHOD	DAILY MAX	AVG MONTHLY	**RECORD SAMPLE TYPES (G, C, M OR E) & RESULTS BELOW** G=Grab, C-composite, M=measured flow, E=estimated flow							UNITS
FLOW				E	71						gal/day
Acetone	524.2	20.70	8.20	G	<1						mg/L
n-Amyl acetate	1666	20.70	8.20	G	<0.100						mg/L
Ethyl Acetate	1666	20.70	8.20	G	<0.200						mg/L
Isopropyl acetate	1666	20.70	8.20	G	<0.100						mg/L
Methylene chloride	524.2	3.00	0.70	G	<0.100						mg/L
Dilution by lab					20						

RECEIVED
APR 22 2011
DIVISION OF
ENVIRONMENTAL COMPLIANCE

Metropolitan St. Louis Sewer District
Division of Environmental Compliance
10 East Grand Avenue
St. Louis, MO 63147-2913
Phone: 314.768.6200 www.stlmsd.com

April 19, 2011

Julie Summers
MALLINCKRODT
3600 North Second St.
St. Louis, MO 63147

Re: Wastewater User Charge Billing for Special Discharge

Dear Ms. Summers:

This is to advise you of the wastewater user charges applicable to an on-site special discharge approved in our letter to you dated January 19, 2011, with 30 day extensions dated February 9, 2011 and March 11, 2011. The discharge date and quantity are from information submitted by you in an email dated April 19, 2011.

Our Finance Department will bill you by invoice for the charges described below. These charges are based on the rates in MSD Wastewater User Charge Ordinance 13021.

PARTY TO BILL: Addressee

BILLING IS FOR: On-Site Special Discharge

DISCHARGE PERIOD: February 9, 2011 – April 5, 2011

SOURCE OF WASTE: Accumulated rainwater formerly in contact with potentially radioactive soils now stored in Baker tanks at the Mallinckrodt facility located at 3600 North Second Street, St. Louis, Missouri.

Discharge Period	Billing Item	Quantity	Units	Rate	Charge
2/9/11 – 4/5/11	Volume	45	CcF	$2.02	$90.90
Totals:	------	45	Gal	-----	$90.90

Please do not pay until you receive our invoice. If you have any questions, please contact me at (314) 436-8755.

Sincerely,
METROPOLITAN ST. LOUIS SEWER DISTRICT

Steven M. Grace

Steve Grace
Environmental Assistant Engineer

bv

pc Chris Verplancke - Finance Dept.
Doug Mendoza
Brian Gibson

File: IU, MALLINCKRODT INC [2112059600], 3600 North Second Street, St. Louis, Missouri

Steve Grace

From: Summers, Julie [Julie.Summers@Covidien.com]
Sent: Tuesday, April 19, 2011 11:19 AM
To: Steve Grace
Subject: Special Discharge Permit Roll-Off Rainwater Dated January 19, 2011
Attachments: Baker Tank Discharge Log.pdf

Steve,

This email is to notify you that we have completed discharge of the roll-off rainwater that was accumulated in Baker tanks onsite. This discharge was permitted by MSD in a letter dated January 19, 2011 and subsequent extensions. The discharge occurred between February 9, 2011 and April 5, 2011 with total discharges being 33,852 gallons through SP001. I have attached a log of the discharges for your reference.

Please let me know if you have any questions or need additional information.

Julie Summers
Environmental Manager
Covidien/Mallinckrodt
3600 North 2nd Street
St. Louis, MO 63147
314-654-1969 Phone
314-654-1251 Fax

Discharge Log for Lower Area Frac Tanks

CT Covidien Plant

Contractor: AECOM

Date Start Discharge: 2/9/2011 Notified MSD, Steve Grace, (314) 436-8755
(Contacted via email, Lisa Meyer @ 11:30 2/9/11)

Date Discharged Completed: 4/5/2011

			Start		Stop		Daily		Running	
Signurature	Frac Tank ID#	Date	Time	Totalizer	Time	Totalizer	Total Time	Total Volume	Total Time	Total Volume
	316750	2/9/2011	13:25	11.3			HR:MIN	GAL	HR:MIN	GAL
	316750	2/9/2011			14:31	11.3	1:06	0	1:06	0
	316750	2/10/2011	8:14	11.3						
	316750	2/10/2011			14:43	4167.3	6:29	4156	7:35	4156
	316750	2/11/2011	7:57	4167.3						
	316750	2/11/2011			14:49	7611	6:52	3443.7	14:27	7599.7
	316750	2/14/2011	7:09	7611						
	316750	2/14/2011			14:51	9050	7:42	1439	22:09	9038.7
	316750	2/15/2011	7:06	9050						
	316750	2/15/2011			15:05	9533	7:59	483	6:08	9521.7
	3218	2/17/2011	7:48	9533						
	3218	2/17/2011			14:59	14425	7:11	4892	13:19	14413.7
	316750	2/18/2011	8:03	14425						
	316750	2/18/2011			12:19	14719.2	4:16	294.2	17:35	14707.9
	3218	2/24/2011	12:46	14719.2						
	3218	2/24/2011			14:59	16211	2:13	1491.8	19:48	16199.7
	3218	2/25/2011	8:47	16211						
	3218	2/25/2011			14:44	18529	5:57	2318	1:45	18517.7
	3218	2/28/2011	8:23	18529						
	3218	2/28/2011			14:08	18765.3	5:45	236.3	7:30	18754
	3218	3/7/2011	12:47	18765.3						
	3218	3/7/2011			13:51	18920	1:04	154.7	8:34	18908.7
	3218	3/25/2011	8:36	18920						
	3218	3/25/2011			12:15	21380	3:39	2460	12:13	21368.7
	3218	3/28/2011	8:03	21380						
	3218	3/28/2011			14:46	25480	6:43	4100	18:56	25468.7
	3218	3/29/2011	7:47	25480						
	3218	3/29/2011			14:48	28862	7:01	3382	1:57	28850.7
	3218	3/30/2011	7:59	28862						
	3218	3/30/2011			14:38	30120	6:39	1258	8:36	30108.7
	3218	3/31/2011	7:45	30120						
	3218	3/31/2011			14:53	30214	7:08	94	15:44	30202.7
	3218	4/1/2011	12:28	30214						
	3218	4/1/2011			15:04	31952	2:36	1738	18:20	31940.7
	3218	4/4/2011	12:39	31952						
	3218	4/4/2011			14:46	33203	2:07	1251	20:27	33191.7
	3218	4/5/2011	7:53	33203						
	3218	4/5/2011			14:38	33863	6:45	660	3:12	33851.7

Total Time: 51.25 Hours
Total Volume 33851.7 Gallons

SCANNED

MSD 011337

Metropolitan St. Louis Sewer District
Division of Environmental Compliance
10 East Grand Avenue
St. Louis, MO 63147-2913
Phone: 314.768.6200 www.stlmsd.com

April 19, 2011

Julie Summers
MALLINCKRODT
3600 North Second St.
St. Louis, MO 63147

Re: Wastewater User Charge Billing for Special Discharge

Dear Ms. Summers:

This is to advise you of the wastewater user charges applicable to an on-site special discharge approved in our letter to you dated January 21, 2011. The discharge date and quantity are from information submitted by you in an email dated April 19, 2011.

Our Finance Department will bill you by invoice for the charges described below. These charges are based on the rates in MSD Wastewater User Charge Ordinance 13021.

PARTY TO BILL: Addressee

BILLING IS FOR: On-Site Special Discharge

DISCHARGE PERIOD: March 24, March 28, and April 7, 2011

SOURCE OF WASTE: First 3 batches of treated rainwater and groundwater from the remediation of the Columbium-Tantalum (CT) decommissioning project at the Mallinckrodt facility located at 3600 North Second Street, St. Louis, Missouri.

Discharge Period	Billing Item	Quantity	Units	Rate	Charge
March 24, 2011	Volume	28	CcF	$2.02	$56.56
March 28, 2011	Volume	27	CcF	$2.02	$54.54
April 7, 2011	Volume	54	CcF	$2.02	$109.08
Totals:	------	109	Gal	-----	$220.18

Please do not pay until you receive our invoice. If you have any questions, please contact me at (314) 436-8755.

Sincerely,
METROPOLITAN ST. LOUIS SEWER DISTRICT

Steven M. Grace

Steve Grace
Environmental Assistant Engineer

bv

pc Chris Verplancke - Finance Dept.
Doug Mendoza
Brian Gibson

File: IU, MALLINCKRODT INC [2112059600], 3600 North Second Street, St. Louis, Missouri

Steve Grace

From: Summers, Julie [Julie.Summers@Covidien.com]
Sent: Monday, April 18, 2011 3:37 PM
To: Steve Grace
Cc: Burke, Karen
Subject: CT Excavation Discharge Summary
Attachments: CT Excavation Wastewater Discharge Summary Log.xlsx

Steve,

Attached is a spreadsheet with date, time, and volume information regarding the CT Excavation Wastewater discharges that were made under the Special Discharge Permit dated January 21, 2011.

Thanks,
Julie Summers
Environmental Manager
Covidien/Mallinckrodt
3600 North 2nd Street
St. Louis, MO 63147
314-654-1969 Phone
314-654-1251 Fax

Summary of CT Excavation Wastewater Discharges
Mallinckrodt St. Louis Plant

	Date of Discharge	Start Time	End Time	Volume Discharged (gallons)
Dischage 1	3/24/2011	0800	0850	21,000
Dischage 2	3/28/2011	0801	0900	20,000
Dischage 3	4/7/2011	1038	1313	40,000

Metropolitan St. Louis Sewer District
Division of Environmental Compliance
10 East Grand Avenue
St. Louis, MO 63147-2913
Phone: 314.768.6200 www.stlmsd.com

April 19, 2011

Julie Summers
MALLINCKRODT
3600 North Second St.
St. Louis, MO 63147

Re: Wastewater User Charge Billing for Special Discharge

Dear Ms. Summers:

This is to advise you of the wastewater user charges applicable to an on-site special discharge approved in our letter to you dated April 14, 2011. You were advised of the extra-strength surcharges as part of the approval letter. That charge was determined using the ethylene glycol concentration in your application for special discharge. The discharge date and quantity are from information submitted by you in an email dated April 19, 2011.

Our Finance Department will bill you by invoice for the charges described below. These charges are based on the rates in MSD Wastewater User Charge Ordinance 13021. For your convenience, using the volume and strength of the waste discharged, the ordinance rates have been converted to a per-gallon basis.

PARTY TO BILL: Addressee

BILLING IS FOR: On-Site Special Discharge

DISCHARGE PERIOD: April 16, 2011

SOURCE OF WASTE: 40% ethylene glycol solution from the chiller system located west of the boiler house of the Mallinckrodt facility located at 3600 North Second Street, St. Louis, Missouri.

Discharge Period	Billing Item	Quantity	Units	Rate	Charge
4/16/11	Extra-Strength Surcharge	200	Gal	$0.50	$100.00
Totals:	------	200	Gal	-----	$100.00

Please do not pay until you receive our invoice. If you have any questions, please contact me at (314) 436-8755.

Sincerely,
METROPOLITAN ST. LOUIS SEWER DISTRICT

Steven M. Grace

Steve Grace
Environmental Assistant Engineer

Bv

pc Chris Verplancke - Finance Dept.
Doug Mendoza
Brian Gibson

File: IU, MALLINCKRODT INC [2112059600], 3600 North Second Street, St. Louis, Missouri

Steve Grace

From: Summers, Julie [Julie.Summers@Covidien.com]
Sent: Tuesday, April 19, 2011 11:03 AM
To: Steve Grace
Subject: Discharge of Glycol from Boilerhouse Rental Chiller

Steve,

On April 14, 2011, approval was receive from MSD to discharge 1000 gallons of a 40% ethylene glycol solution from the Boilerhouse rental chiller. On April 16, 2011 an estimated amount of 200 gallons of 40% ethylene glycol solution was discharged through the plant sewers to the plant's neutralization system between 0700 and 0830. The actual amount discharged was able to be reduced from the initial estimate based on the location of isolation valves on the unit.

Please call me if you have any questions or need additional information.

Thanks,
Julie Summers
Environmental Manager
Mallinckrodt/Covidien
3600 North 2nd Street
St. Louis, MO 63147
314-654-1969 Phone
314-654-1251 Fax

Mallinckrodt Inc.
IV - 21120596-00 SPB50

Steve Grace

From: Steve Grace
Sent: Monday, April 18, 2011 4:36 PM
To: 'Summers, Julie'
Cc: Burke, Karen
Subject: RE: Wastewater Discharge 004

Hello Julie,

Sorry for the delay. A review of the laboratory analytical data for Discharge 004 from the C-T Phase II decommissioning activities indicated this batch meets MSD Ordinance 12559 standards along with those outlined in 10 CFR Part 20, Appendix B, Table 3, and is approved for discharge into a combined sewer identified on MSD's base map as Inlet 18D1-395C. As a general reminder, the discharge into the sewer must be controlled at a rate that will not surcharge the lines in that area. In addition, the volume of this batch of wastewater must be confirmed in writing no later than 28 days after the date of this discharge. The approval for Discharge 004 is valid for 30 days from the date of this email.

Please contact me should you have any questions or require additional information.

Thank you,
Steve Grace

From: Summers, Julie [mailto:Julie.Summers@Covidien.com]
Sent: Friday, April 15, 2011 11:59 AM
To: Steve Grace
Cc: Burke, Karen
Subject: FW: Wastewater Discharge 004
Importance: High

Steve,

I know you are busy Steve, but due to the recent and expected rainfall it would be great if you could approve this discharge today.

Mallinckrodt requests permission to discharge 40,000 gallons of treated rainwater and groundwater collected as part of the C-T Phase II decommissioning activities. The wastewater discharge will be identified as Discharge 004. The laboratory analytical results demonstrate that the discharge will comply with the requirements of the Metropolitan St. Louis Sewer District as set forth in their letter to Lisa Meyer dated January 21, 2011. In addition, the discharge meets the monthly average concentrations for release to sanitary sewers per the requirements of 10 CFR 20.2003. Both a discharge summary and the detailed laboratory analytical results are attached for your information.

Thanks,
Julie

Wastewater Discharge 004 - Analytical Results Summary

Sample ID: 60162412-SMP-PL5-WA-OTH-0512

Analyte	Units	Limit	Concentration	Qualifiers[1]
VOCs				
Acrolein	mg/L		< 0.01	U
Acrylonitrile	mg/L		< 0.01	U
Benzene	mg/L		< 0.001	U
Bromoform	mg/L		< 0.001	U
Bromomethane	mg/L		< 0.002	U
Carbon tetrachloride	mg/L		< 0.001	U
Chlorobenzene	mg/L		< 0.001	U
Chlorodibromomethane	mg/L		< 0.001	U
Chloroethane	mg/L		< 0.002	U
Chloroform	mg/L		< 0.001	U
Chloromethane	mg/L		0.00034	J
Dichlorobromomethane	mg/L		< 0.001	U
1,1- Dichloroethane	mg/L		< 0.001	U
1,2- Dichloroethane	mg/L		< 0.001	U
1,1- Dichloroethene	mg/L		< 0.001	U
1,2- Dichloroethane	mg/L		< 0.002	U
1,2- Dichloropropane	mg/L		< 0.001	U
cis-1,3-Dichloropropene	mg/L		< 0.001	U
trans-1,3-Dichloropropene	mg/L		< 0.001	U
Ethylbenzene	mg/L		< 0.001	U
Methylene Chloride	mg/L		< 0.001	U
1,1,2,2-Tetrachloroethane	mg/L		< 0.001	U
Tetra chloroethene	mg/L		< 0.001	U
Toluene	mg/L		< 0.001	U
1,1,1- Trichloroethane	mg/L		< 0.001	U
1,1,2- Trichloroethane	mg/L		< 0.001	U
Trichloroethene	mg/L		< 0.001	U
Vinyl Chloride	mg/L		< 0.002	U
Total Toxic Organics	*mg/L*	*5.844*	*< 0.049*	
Metals				
Cadmium	mg/L	0.7	< 0.005	U
Chromium	mg/L	5	< 0.01	U
Copper	mg/L	2.7	0.0129	J
Iron	mg/L	150	0.0775	J
Nickel	mg/L	2.3	< 0.04	U
Lead	mg/L	0.4	0.0289	
Zinc	mg/L	3	0.0429	

Analyte	Units	Limit	Concentration	Qualifiers[1]
General Chemistry				
pH		5.5-11.5	6.6	
COD	mg/L	600	< 20	U
TSS	mg/L	300	< 4	U
Radionuclides				
Gross Alpha	pCi/L	3,000	< 3.8	U
Gross Beta	pCi/L	50	< 3.3	U
Ra-226	pCi/L	10	0.16	J
Ra-228	pCi/L	30	< 0.34	U
Th-228	pCi/L	2,000	< 0.21	U
Th-230	pCi/L	1,000	< 0.12	U
Th-232	pCi/L	300	< 0.12	U
U-234	pCi/L		< 0.17	U
U-235/6	pCi/L		< 0.16	U
U-238	pCi/L		< 0.15	U
Total Uranium	*pCi/L*	*3,000*	*< 0.48*	

10 CFR 20 Appendix B Table 3 Values

Analyte	Units	Limit	Discharge Concentration	Averaged Concentration
Ra-226	pCi/L	0.6	0.16	0.000
Ra-228	pCi/L	0.6	0.34	0.001
Th-228	pCi/L	2	0.21	0.000
Th-230	pCi/L	1	0.12	0.000
Th-232	pCi/L	0.3	0.12	0.000
U-234	pCi/L	3	0.17	0.000
U-235/6	pCi/L	3	0.16	0.000
U-238	pCi/L	3	0.15	0.000
Sum of Fractions	*pCi/L*	*1*	*n/a*	*0.005*

Discharge Volume (gals) = 40,000

Covidien averaging factor[2] = 0.002

Analyte	Units	Annual Limit	Discharge Activity	Year to Date Activity
Gross Radioactivity	Ci	1	1.1E-06	5.3E-06

Notes:

(1) 'J' indicates estimated value; 'U' indicates result less than sample detection limit; 'A' indicates value may be biased high based on QC results

(2) derived from discharge volume divided by a Covidien minimum average monthly volume (20,000,000 gal)

TestAmerica
THE LEADER IN ENVIRONMENTAL TESTING

TestAmerica Laboratories, Inc.

ANALYTICAL REPORT

Mallinckrodt St. Louis Plant

Lot #: F1D070603

Mark Tepperman

AECOM Technical Services Inc.
8005 Outer Circle Road
Brooks Air Force Bas, TX 78235

TESTAMERICA LABORATORIES, INC.

Jayna Awalt
Project Manager

April 15, 2011

Case Narrative
LOT NUMBER: **F1D070603**

This report contains the analytical results for the two samples received under chain of custody by TestAmerica St. Louis on April 7, 2011. These samples are associated with your Mallinckrodt St. Louis Plant project.

The analytical results included in this report meet all applicable quality control procedure requirements except as noted in the following case narrative.

The test results in this report meet all NELAP requirements for parameters in which accreditations are held by TestAmerica St. Louis. Any exceptions to NELAP requirements are noted in the case narrative. The case narrative is an integral part of this report.

All chemical analysis results are based upon sample as received, wet weight, unless noted otherwise. All radiochemistry results are based upon sample as dried and ground with the exception of tritium, unless requested wet weight by the client.

Observations/Nonconformances
Reference the chain of custody and condition upon receipt report for any variations on receipt conditions and temperature of samples on receipt

Gross Alpha/Beta Method 900 MOD
Batch: 1101085

The Gross Alpha and/or Beta reporting limit was not met due to a reduction of sample size attributed to the sample's high residual mass. The analytical results are reported.
Affected Samples:
F1D070603 (1): 60162412-SMP-PL5-WW-OTH-0512

There are no other observations or non-conformances associated with the analyses contained in this report.

METHODS SUMMARY

F1D070603

PARAMETER	ANALYTICAL METHOD	PREPARATION METHOD
pH Aqueous	SW846 9040	SW846 9040
Chemical Oxygen Demand	MCAWW 410.4	MCAWW 410.4
Gross Alpha/Beta EPA 900	EPA 900.0 MOD	EPA 900.0
Isotopic Thorium by Alpha Spectroscopy	EML A-01-R MOD	
Isotopic Uranium by Alpha Spectroscopy	EML A-01-R MOD	
Non-Filterable Residue (TSS)	MCAWW 160.2	MCAWW 160.2
Purgeables	CFR136A 624	SW846 5030B
Radium-226 by GFPC	EPA 903.0 MOD	
Radium-228 by GFPC	EPA 904 MOD	
Trace Inductively Coupled Plasma (ICP) Metals	SW846 6010B	

References:

CFR136A "Methods for Organic Chemical Analysis of Municipal and Industrial Wastewater", 40CFR, Part 136, Appendix A, October 26, 1984 and subsequent revisions.

EML "ENVIRONMENTAL MEASUREMENTS LABORATORY PROCEDURES MANUAL" HASL-300 28TH EDITION, VOLUME I and II DEPARTMENT OF ENERGY

EPA "EASTERN ENVIRONMENTAL RADIATION FACILITY RADIOCHEMISTRY PROCEDURES MANUAL" US EPA EPA 520/5-84-006 AUGUST 1984

MCAWW "Methods for Chemical Analysis of Water and Wastes", EPA-600/4-79-020, March 1983 and subsequent revisions.

SW846 "Test Methods for Evaluating Solid Waste, Physical/Chemical Methods", Third Edition, November 1986 and its updates.

SAMPLE SUMMARY

F1D070603

WO #	SAMPLE#	CLIENT SAMPLE ID	SAMPLED DATE	SAMP TIME
MGPJN	001	60162412-SMP-PL5-WW-OTH-0512	04/07/11	13:43
MGPJ2	002	VOC BLANKS	04/07/11	

NOTE(S):

- The analytical results of the samples listed above are presented on the following pages.
- All calculations are performed before rounding to avoid round-off errors in calculated results.
- Results noted as "ND" were not detected at or above the stated limit.
- This report must not be reproduced, except in full, without the written approval of the laboratory.
- Results for the following parameters are never reported on a dry weight basis: color, corrosivity, density, flashpoint, ignitability, layers, odor, paint filter test, pH, porosity pressure, reactivity, redox potential, specific gravity, spot tests, solids, solubility, temperature, viscosity, and weight.

AECOM Technical Services Inc.

Client Sample ID: 60162412-SMP-PL5-WW-OTH-0512

GC/MS Volatiles

Lot-Sample #...: F1D070603-001 **Work Order #...:** MGPJN1AJ **Matrix.....:** WATER
Date Sampled...: 04/07/11 13:43 **Date Received..:** 04/07/11
Prep Date.....: 04/13/11 **Analysis Date..:** 04/14/11
Prep Batch #...: 1104275 **Analysis Time..:** 11:08
Dilution Factor: 1

Method.....: CFR136A 624

PARAMETER	RESULT	REPORTING LIMIT	UNITS
Acrolein	ND	10	ug/L
Acrylonitrile	ND	10	ug/L
Benzene	ND	1.0	ug/L
Bromoform	ND	1.0	ug/L
Bromomethane	ND	2.0	ug/L
Carbon tetrachloride	ND	1.0	ug/L
Chlorobenzene	ND	1.0	ug/L
Chlorodibromomethane	ND	1.0	ug/L
Chloroethane	ND	2.0	ug/L
Chloroform	ND	1.0	ug/L
Chloromethane	**0.34 J**	**2.0**	**ug/L**
Dichlorobromomethane	ND	1.0	ug/L
1,1-Dichloroethane	ND	1.0	ug/L
1,2-Dichloroethane	ND	1.0	ug/L
1,1-Dichloroethene	ND	1.0	ug/L
1,2-Dichloroethene (total)	ND	2.0	ug/L
1,2-Dichloropropane	ND	1.0	ug/L
cis-1,3-Dichloropropene	ND	1.0	ug/L
trans-1,3-Dichloropropene	ND	1.0	ug/L
Ethylbenzene	ND	1.0	ug/L
Methylene chloride	ND	1.0	ug/L
1,1,2,2-Tetrachloroethane	ND	1.0	ug/L
Tetrachloroethene	ND	1.0	ug/L
Toluene	ND	1.0	ug/L
1,1,1-Trichloroethane	ND	1.0	ug/L
1,1,2-Trichloroethane	ND	1.0	ug/L
Trichloroethene	ND	1.0	ug/L
Vinyl chloride	ND	2.0	ug/L

SURROGATE	PERCENT RECOVERY	RECOVERY LIMITS
1,2-Dichloroethane-d4	76	(62 - 122)
Toluene-d8	104	(73 - 116)
4-Bromofluorobenzene	108	(68 - 118)

NOTE(S):

J Estimated result. Result is less than RL.

AECOM Technical Services Inc.

Client Sample ID: VOC BLANKS

GC/MS Volatiles

Lot-Sample #...: F1D070603-002 **Work Order #...:** MGPJ21AA **Matrix.....:** WATER
Date Sampled...: 04/07/11 **Date Received..:** 04/07/11
Prep Date.....: 04/13/11 **Analysis Date..:** 04/14/11
Prep Batch #...: 1104275 **Analysis Time..:** 11:32
Dilution Factor: 1

Method.....: CFR136A 624

PARAMETER	RESULT	REPORTING LIMIT	UNITS
Acrolein	ND	10	ug/L
Acrylonitrile	ND	10	ug/L
Benzene	ND	1.0	ug/L
Bromoform	ND	1.0	ug/L
Bromomethane	ND	2.0	ug/L
Carbon tetrachloride	ND	1.0	ug/L
Chlorobenzene	ND	1.0	ug/L
Chlorodibromomethane	ND	1.0	ug/L
Chloroethane	ND	2.0	ug/L
Chloroform	ND	1.0	ug/L
Chloromethane	**0.27 J**	**2.0**	**ug/L**
Dichlorobromomethane	ND	1.0	ug/L
1,1-Dichloroethane	ND	1.0	ug/L
1,2-Dichloroethane	ND	1.0	ug/L
1,1-Dichloroethene	ND	1.0	ug/L
1,2-Dichloroethene (total)	ND	2.0	ug/L
1,2-Dichloropropane	ND	1.0	ug/L
cis-1,3-Dichloropropene	ND	1.0	ug/L
trans-1,3-Dichloropropene	ND	1.0	ug/L
Ethylbenzene	ND	1.0	ug/L
Methylene chloride	**0.97 J**	**1.0**	**ug/L**
1,1,2,2-Tetrachloroethane	ND	1.0	ug/L
Tetrachloroethene	ND	1.0	ug/L
Toluene	ND	1.0	ug/L
1,1,1-Trichloroethane	ND	1.0	ug/L
1,1,2-Trichloroethane	ND	1.0	ug/L
Trichloroethene	ND	1.0	ug/L
Vinyl chloride	ND	2.0	ug/L

SURROGATE	PERCENT RECOVERY	RECOVERY LIMITS
1,2-Dichloroethane-d4	76	(62 - 122)
Toluene-d8	101	(73 - 116)
4-Bromofluorobenzene	103	(68 - 118)

NOTE(S):

J Estimated result. Result is less than RL.

METHOD BLANK REPORT

GC/MS Volatiles

Client Lot #...: F1D070603 **Work Order #...:** MG17G1AA **Matrix.....:** WATER
MB Lot-Sample #: F1D140000-275

Prep Date.....: 04/13/11 **Analysis Time..:** 16:41
Analysis Date..: 04/13/11 **Prep Batch #...:** 1104275
Dilution Factor: 1

PARAMETER	RESULT	REPORTING LIMIT	UNITS	METHOD
Acrolein	ND	10	ug/L	CFR136A 624
Acrylonitrile	ND	10	ug/L	CFR136A 624
Benzene	ND	1.0	ug/L	CFR136A 624
Bromoform	ND	1.0	ug/L	CFR136A 624
Bromomethane	ND	2.0	ug/L	CFR136A 624
Carbon tetrachloride	ND	1.0	ug/L	CFR136A 624
Chlorobenzene	ND	1.0	ug/L	CFR136A 624
Chlorodibromomethane	ND	1.0	ug/L	CFR136A 624
Chloroethane	ND	2.0	ug/L	CFR136A 624
Chloroform	ND	1.0	ug/L	CFR136A 624
Chloromethane	ND	2.0	ug/L	CFR136A 624
Dichlorobromomethane	ND	1.0	ug/L	CFR136A 624
1,1-Dichloroethane	ND	1.0	ug/L	CFR136A 624
1,2-Dichloroethane	ND	1.0	ug/L	CFR136A 624
1,1-Dichloroethene	ND	1.0	ug/L	CFR136A 624
1,2-Dichloroethene (total)	ND	2.0	ug/L	CFR136A 624
1,2-Dichloropropane	ND	1.0	ug/L	CFR136A 624
cis-1,3-Dichloropropene	ND	1.0	ug/L	CFR136A 624
trans-1,3-Dichloropropene	ND	1.0	ug/L	CFR136A 624
Ethylbenzene	ND	1.0	ug/L	CFR136A 624
Methylene chloride	ND	1.0	ug/L	CFR136A 624
1,1,2,2-Tetrachloroethane	ND	1.0	ug/L	CFR136A 624
Tetrachloroethene	ND	1.0	ug/L	CFR136A 624
Toluene	ND	1.0	ug/L	CFR136A 624
1,1,1-Trichloroethane	ND	1.0	ug/L	CFR136A 624
1,1,2-Trichloroethane	ND	1.0	ug/L	CFR136A 624
Trichloroethene	ND	1.0	ug/L	CFR136A 624
Vinyl chloride	ND	2.0	ug/L	CFR136A 624

SURROGATE	PERCENT RECOVERY	RECOVERY LIMITS
1,2-Dichloroethane-d4	82	(62 - 122)
Toluene-d8	102	(73 - 116)
4-Bromofluorobenzene	102	(68 - 118)

NOTE(S):

Calculations are performed before rounding to avoid round-off errors in calculated results.

LABORATORY CONTROL SAMPLE EVALUATION REPORT

GC/MS Volatiles

Client Lot #...: F1D070603 Work Order #...: MG17G1AC Matrix.....: WATER
LCS Lot-Sample#: F1D140000-275
Prep Date.....: 04/13/11 Analysis Date..: 04/13/11
Prep Batch #...: 1104275 Analysis Time..: 14:14
Dilution Factor: 1

PARAMETER	PERCENT RECOVERY	RECOVERY LIMITS	METHOD
Acrolein	98	(40 - 140)	CFR136A 624
Acrylonitrile	102	(67 - 140)	CFR136A 624
Benzene	94	(76 - 119)	CFR136A 624
Bromoform	103	(71 - 139)	CFR136A 624
Bromomethane	76	(67 - 140)	CFR136A 624
Carbon tetrachloride	99	(73 - 140)	CFR136A 624
Chlorobenzene	96	(80 - 115)	CFR136A 624
Chlorodibromomethane	103	(74 - 140)	CFR136A 624
Chloroethane	80	(36 - 140)	CFR136A 624
Chloroform	94	(77 - 121)	CFR136A 624
Chloromethane	80	(41 - 140)	CFR136A 624
Dichlorobromomethane	98	(72 - 138)	CFR136A 624
1,1-Dichloroethane	91	(71 - 124)	CFR136A 624
1,2-Dichloroethane	93	(67 - 133)	CFR136A 624
1,1-Dichloroethene	94	(77 - 120)	CFR136A 624
1,2-Dichloroethene (total)	93	(78 - 123)	CFR136A 624
1,2-Dichloropropane	93	(67 - 137)	CFR136A 624
cis-1,3-Dichloropropene	102	(58 - 140)	CFR136A 624
trans-1,3-Dichloropropene	108	(61 - 140)	CFR136A 624
Ethylbenzene	98	(77 - 123)	CFR136A 624
Methylene chloride	91	(62 - 127)	CFR136A 624
1,1,2,2-Tetrachloroethane	83	(61 - 128)	CFR136A 624
Tetrachloroethene	92	(67 - 140)	CFR136A 624
Toluene	94	(75 - 120)	CFR136A 624
1,1,1-Trichloroethane	96	(81 - 125)	CFR136A 624
1,1,2-Trichloroethane	94	(73 - 126)	CFR136A 624
Trichloroethene	85	(76 - 126)	CFR136A 624
Vinyl chloride	74	(58 - 129)	CFR136A 624

SURROGATE	PERCENT RECOVERY	RECOVERY LIMITS
1,2-Dichloroethane-d4	82	(62 - 126)
Toluene-d8	97	(78 - 119)

(Continued on next page)

LABORATORY CONTROL SAMPLE EVALUATION REPORT

GC/MS Volatiles

Client Lot #...: F1D070603 **Work Order #...:** MG17G1AC **Matrix.....:** WATER
LCS Lot-Sample#: F1D140000-275

SURROGATE	PERCENT RECOVERY	RECOVERY LIMITS
4-Bromofluorobenzene	92	(73 - 115)

NOTE(S):

Calculations are performed before rounding to avoid round-off errors in calculated results.

Bold print denotes control parameters

MATRIX SPIKE SAMPLE EVALUATION REPORT

GC/MS Volatiles

Client Lot #...: F1D070603 Work Order #...: MGTM81AD-MS Matrix.....: WATER
MS Lot-Sample #: F1D090451-011 MGTM81AE-MSD
Date Sampled...: 04/07/11 15:00 Date Received..: 04/09/11
Prep Date.....: 04/13/11 Analysis Date..: 04/14/11
Prep Batch #...: 1104275 Analysis Time..: 07:48
Dilution Factor: 2

PARAMETER	PERCENT RECOVERY	RECOVERY LIMITS	RPD	RPD LIMITS	METHOD
Acrolein	109	(50 - 150)			CFR136A 624
	100	(50 - 150)	8.6	(0-20)	CFR136A 624
Acrylonitrile	106	(50 - 150)			CFR136A 624
	103	(50 - 150)	2.5	(0-20)	CFR136A 624
Benzene	108	(47 - 150)			CFR136A 624
	99	(47 - 150)	8.5	(0-20)	CFR136A 624
Bromoform	112	(45 - 150)			CFR136A 624
	107	(45 - 150)	4.2	(0-20)	CFR136A 624
Bromomethane	72	(41 - 150)			CFR136A 624
	81	(41 - 150)	12	(0-20)	CFR136A 624
Carbon tetrachloride	98	(70 - 140)			CFR136A 624
	95	(70 - 140)	3.3	(0-20)	CFR136A 624
Chlorobenzene	107	(54 - 145)			CFR136A 624
	98	(54 - 145)	8.0	(0-20)	CFR136A 624
Chlorodibromomethane	111	(64 - 148)			CFR136A 624
	107	(64 - 148)	3.8	(0-20)	CFR136A 624
Chloroethane	86	(28 - 150)			CFR136A 624
	84	(28 - 150)	1.5	(0-20)	CFR136A 624
Chloroform	107	(51 - 138)			CFR136A 624
	100	(51 - 138)	6.4	(0-20)	CFR136A 624
Chloromethane	85	(33 - 150)			CFR136A 624
	77	(33 - 150)	10	(0-20)	CFR136A 624
Dichlorobromomethane	114	(47 - 150)			CFR136A 624
	106	(47 - 150)	7.9	(0-20)	CFR136A 624
1,1-Dichloroethane	106	(59 - 150)			CFR136A 624
	98	(59 - 150)	8.1	(0-20)	CFR136A 624
1,2-Dichloroethane	106	(59 - 143)			CFR136A 624
	99	(59 - 143)	7.0	(0-20)	CFR136A 624
1,1-Dichloroethene	98	(48 - 150)			CFR136A 624
	92	(48 - 150)	7.0	(0-20)	CFR136A 624
1,2-Dichloroethene (total)	103	(56 - 150)			CFR136A 624
	98	(56 - 150)	5.2	(0-20)	CFR136A 624
1,2-Dichloropropane	109	(56 - 150)			CFR136A 624
	100	(56 - 150)	8.6	(0-20)	CFR136A 624
cis-1,3-Dichloropropene	111	(50 - 150)			CFR136A 624
	108	(50 - 150)	2.6	(0-20)	CFR136A 624
trans-1,3-Dichloropropene	117	(31 - 150)			CFR136A 624
	115	(31 - 150)	1.4	(0-20)	CFR136A 624

(Continued on next page)

MATRIX SPIKE SAMPLE EVALUATION REPORT

GC/MS Volatiles

Client Lot #...: F1D070603 Work Order #...: MGTM81AD-MS Matrix.....: WATER
MS Lot-Sample #: F1D090451-011 MGTM81AE-MSD

PARAMETER	PERCENT RECOVERY	RECOVERY LIMITS	RPD	RPD LIMITS	METHOD
Ethylbenzene	106	(53 - 150)			CFR136A 624
	99	(53 - 150)	6.5	(0-20)	CFR136A 624
Methylene chloride	103	(38 - 150)			CFR136A 624
	97	(38 - 150)	5.7	(0-20)	CFR136A 624
1,1,2,2-Tetrachloroethane	103	(46 - 150)			CFR136A 624
	94	(46 - 150)	9.2	(0-20)	CFR136A 624
Tetrachloroethene	89	(65 - 148)			CFR136A 624
	88	(65 - 148)	2.1	(0-20)	CFR136A 624
Toluene	106	(52 - 150)			CFR136A 624
	97	(52 - 150)	9.0	(0-20)	CFR136A 624
1,1,1-Trichloroethane	104	(54 - 150)			CFR136A 624
	97	(54 - 150)	7.2	(0-20)	CFR136A 624
1,1,2-Trichloroethane	110	(61 - 137)			CFR136A 624
	103	(61 - 137)	6.4	(0-20)	CFR136A 624
Trichloroethene	85	(71 - 150)			CFR136A 624
	82	(71 - 150)	4.1	(0-20)	CFR136A 624
Vinyl chloride	77	(33 - 150)			CFR136A 624
	74	(33 - 150)	4.5	(0-20)	CFR136A 624

SURROGATE	PERCENT RECOVERY	RECOVERY LIMITS
1,2-Dichloroethane-d4	81	(62 - 122)
	80	(62 - 122)
Toluene-d8	97	(73 - 116)
	98	(73 - 116)
4-Bromofluorobenzene	93	(68 - 118)
	93	(68 - 118)

NOTE(S):

Calculations are performed before rounding to avoid round-off errors in calculated results.

Bold print denotes control parameters

AECOM Technical Services Inc.

Client Sample ID: 60162412-SMP-PL5-WW-OTH-0512

TOTAL Metals

Lot-Sample #...: F1D070603-001 Matrix.....: WATER
Date Sampled...: 04/07/11 13:43 Date Received..: 04/07/11

PARAMETER	RESULT	REPORTING LIMIT	UNITS	METHOD	PREPARATION-ANALYSIS DATE	WORK ORDER #
Prep Batch #...: 1098171						
Cadmium	ND	5	ug/L	SW846 6010B	04/08-04/11/11	MGPJN1AA
		Dilution Factor: 1		Analysis Time..: 17:33		
Chromium	ND	10	ug/L	SW846 6010B	04/08-04/11/11	MGPJN1AC
		Dilution Factor: 1		Analysis Time..: 17:33		
Copper	12.9 B	25	ug/L	SW846 6010B	04/08-04/11/11	MGPJN1AD
		Dilution Factor: 1		Analysis Time..: 17:33		
Iron	77.5 B	100	ug/L	SW846 6010B	04/08-04/11/11	MGPJN1AE
		Dilution Factor: 1		Analysis Time..: 17:33		
Nickel	ND	40	ug/L	SW846 6010B	04/08-04/11/11	MGPJN1AF
		Dilution Factor: 1		Analysis Time..: 17:33		
Lead	28.9	10	ug/L	SW846 6010B	04/08-04/11/11	MGPJN1AG
		Dilution Factor: 1		Analysis Time..: 17:33		
Zinc	42.9	20	ug/L	SW846 6010B	04/08-04/11/11	MGPJN1AH
		Dilution Factor: 1		Analysis Time..: 17:33		

NOTE(S):

B Estimated result. Result is less than RL.

METHOD BLANK REPORT

TOTAL Metals

Client Lot #...: F1D070603 **Matrix.....:** WATER

PARAMETER	RESULT	REPORTING LIMIT	UNITS	METHOD	PREPARATION-ANALYSIS DATE	WORK ORDER #
MB Lot-Sample #: F1D080000-171 **Prep Batch #...:** 1098171						
Cadmium	ND	5	ug/L	SW846 6010B	04/08-04/11/11	MGQGC1AA
		Dilution Factor: 1				
		Analysis Time..: 17:18				
Chromium	ND	10	ug/L	SW846 6010B	04/08-04/11/11	MGQGC1AC
		Dilution Factor: 1				
		Analysis Time..: 17:18				
Copper	ND	25	ug/L	SW846 6010B	04/08-04/11/11	MGQGC1AD
		Dilution Factor: 1				
		Analysis Time..: 17:18				
Iron	ND	100	ug/L	SW846 6010B	04/08-04/11/11	MGQGC1AE
		Dilution Factor: 1				
		Analysis Time..: 17:18				
Lead	ND	10	ug/L	SW846 6010B	04/08-04/11/11	MGQGC1AG
		Dilution Factor: 1				
		Analysis Time..: 17:18				
Nickel	ND	40	ug/L	SW846 6010B	04/08-04/11/11	MGQGC1AF
		Dilution Factor: 1				
		Analysis Time..: 17:18				
Zinc	ND	20	ug/L	SW846 6010B	04/08-04/11/11	MGQGC1AH
		Dilution Factor: 1				
		Analysis Time..: 17:18				

NOTE(S):

Calculations are performed before rounding to avoid round-off errors in calculated results.

LABORATORY CONTROL SAMPLE EVALUATION REPORT

TOTAL Metals

Client Lot #...: F1D070603 Matrix.....: WATER

PARAMETER	PERCENT RECOVERY	RECOVERY LIMITS	METHOD	PREPARATION-ANALYSIS DATE	WORK ORDER #
LCS Lot-Sample#: F1D080000-171 **Prep Batch #...:** 1098171					
Cadmium	106	(80 - 120)	SW846 6010B	04/08-04/11/11	MGQGC1AJ
		Dilution Factor: 1	Analysis Time..: 17:25		
Chromium	102	(80 - 120)	SW846 6010B	04/08-04/11/11	MGQGC1AK
		Dilution Factor: 1	Analysis Time..: 17:25		
Copper	100	(80 - 120)	SW846 6010B	04/08-04/11/11	MGQGC1AL
		Dilution Factor: 1	Analysis Time..: 17:25		
Iron	106	(80 - 120)	SW846 6010B	04/08-04/11/11	MGQGC1AM
		Dilution Factor: 1	Analysis Time..: 17:25		
Nickel	103	(80 - 120)	SW846 6010B	04/08-04/11/11	MGQGC1AN
		Dilution Factor: 1	Analysis Time..: 17:25		
Lead	102	(80 - 120)	SW846 6010B	04/08-04/11/11	MGQGC1AP
		Dilution Factor: 1	Analysis Time..: 17:25		
Zinc	111	(80 - 120)	SW846 6010B	04/08-04/11/11	MGQGC1AQ
		Dilution Factor: 1	Analysis Time..: 17:25		

NOTE(S):

Calculations are performed before rounding to avoid round-off errors in calculated results.

MATRIX SPIKE SAMPLE EVALUATION REPORT

TOTAL Metals

Client Lot #...: F1D070603 **Matrix.....:** WATER
Date Sampled...: 04/07/11 13:43 **Date Received..:** 04/07/11

PARAMETER	PERCENT RECOVERY	RECOVERY LIMITS	RPD	RPD LIMITS	METHOD	PREPARATION-ANALYSIS DATE	WORK ORDER #
MS Lot-Sample #: F1D070603-001 **Prep Batch #...:** 1098171							
Cadmium	105	(75 - 125)			SW846 6010B	04/08-04/11/11	MGPJN1AR
	105	(75 - 125)	0.36	(0-20)	SW846 6010B	04/08-04/11/11	MGPJN1AT
		Dilution Factor: 1					
		Analysis Time..: 17:48					
Chromium	100	(75 - 125)			SW846 6010B	04/08-04/11/11	MGPJN1AU
	100	(75 - 125)	0.46	(0-20)	SW846 6010B	04/08-04/11/11	MGPJN1AV
		Dilution Factor: 1					
		Analysis Time..: 17:48					
Copper	100	(75 - 125)			SW846 6010B	04/08-04/11/11	MGPJN1AW
	100	(75 - 125)	0.59	(0-20)	SW846 6010B	04/08-04/11/11	MGPJN1AX
		Dilution Factor: 1					
		Analysis Time..: 17:48					
Iron	103	(75 - 125)			SW846 6010B	04/08-04/11/11	MGPJN1A0
	104	(75 - 125)	0.52	(0-20)	SW846 6010B	04/08-04/11/11	MGPJN1A1
		Dilution Factor: 1					
		Analysis Time..: 17:48					
Lead	99	(75 - 125)			SW846 6010B	04/08-04/11/11	MGPJN1A4
	99	(75 - 125)	0.03	(0-20)	SW846 6010B	04/08-04/11/11	MGPJN1A5
		Dilution Factor: 1					
		Analysis Time..: 17:48					
Nickel	100	(75 - 125)			SW846 6010B	04/08-04/11/11	MGPJN1A2
	101	(75 - 125)	0.32	(0-20)	SW846 6010B	04/08-04/11/11	MGPJN1A3
		Dilution Factor: 1					
		Analysis Time..: 17:48					
Zinc	112	(75 - 125)			SW846 6010B	04/08-04/11/11	MGPJN1A6
	113	(75 - 125)	0.13	(0-20)	SW846 6010B	04/08-04/11/11	MGPJN1A7
		Dilution Factor: 1					
		Analysis Time..: 17:48					

NOTE(S):

Calculations are performed before rounding to avoid round-off errors in calculated results.

AECOM Technical Services Inc.

Client Sample ID: 60162412-SMP-PL5-WW-OTH-0512

General Chemistry

Lot-Sample #...: F1D070603-001 **Work Order #...:** MGPJN **Matrix.....:** WATER
Date Sampled...: 04/07/11 13:43 **Date Received..:** 04/07/11

PARAMETER	RESULT	RL	UNITS	METHOD	PREPARATION-ANALYSIS DATE	PREP BATCH #
pH (liquid)	**6.6**	**0.10**	**No Units**	**SW846 9040**	**04/07/11**	**1097377**
		Dilution Factor: 1		Analysis Time..: 16:28		
COD	ND	20.0	mg/L	MCAWW 410.4	04/13/11	1104120
		Dilution Factor: 1		Analysis Time..: 00:00		
Total Suspended Solids	ND	4.0	mg/L	MCAWW 160.2	04/13-04/14/11	1104140
		Dilution Factor: 1		Analysis Time..: 00:00		

METHOD BLANK REPORT

General Chemistry

Client Lot #...: F1D070603 Matrix.....: WATER

PARAMETER	RESULT	REPORTING LIMIT	UNITS	METHOD	PREPARATION-ANALYSIS DATE	PREP BATCH #
COD		Work Order #: MG08P1AA		MB Lot-Sample #:	F1D140000-120	
	ND	20.0	mg/L	MCAWW 410.4	04/13/11	1104120
		Dilution Factor: 1				
		Analysis Time..: 00:00				
Total Suspended Solids		Work Order #: MG1EA1AA		MB Lot-Sample #:	F1D140000-140	
	ND	4.0	mg/L	MCAWW 160.2	04/13-04/14/11	1104140
		Dilution Factor: 1				
		Analysis Time..: 00:00				

NOTE(S):

Calculations are performed before rounding to avoid round-off errors in calculated results.

LABORATORY CONTROL SAMPLE EVALUATION REPORT

General Chemistry

Client Lot #...: F1D070603 Matrix.....: WATER

PARAMETER	PERCENT RECOVERY	RECOVERY LIMITS	METHOD	PREPARATION-ANALYSIS DATE	PREP BATCH #
pH (liquid)		Work Order #: MGT861AA	LCS Lot-Sample#: F1D070000-377		
	101	(99 - 101)	SW846 9040	04/07/11	1097377
		Dilution Factor: 1	Analysis Time..: 16:28		
COD		Work Order #: MG08P1AC	LCS Lot-Sample#: F1D140000-120		
	98	(90 - 110)	MCAWW 410.4	04/13/11	1104120
		Dilution Factor: 1	Analysis Time..: 00:00		
Total Suspended Solids		Work Order #: MG1EA1AC	LCS Lot-Sample#: F1D140000-140		
	121	(79 - 122)	MCAWW 160.2	04/13-04/14/11	1104140
		Dilution Factor: 1	Analysis Time..: 00:00		

NOTE(S):

Calculations are performed before rounding to avoid round-off errors in calculated results.

MATRIX SPIKE SAMPLE EVALUATION REPORT

General Chemistry

Client Lot #...: F1D070603 **Matrix.....:** WATER
Date Sampled...: 04/07/11 13:43 **Date Received..:** 04/07/11

PARAMETER	PERCENT RECOVERY	RECOVERY LIMITS	METHOD	PREPARATION-ANALYSIS DATE	PREP BATCH #
COD		Work Order #...: MGPJN1CG		MS Lot-Sample #: F1D070603-001	
	94	(90 - 110)	MCAWW 410.4	04/13/11	1104120

Dilution Factor: 1 Analysis Time..: 00:00

NOTE(S):

Calculations are performed before rounding to avoid round-off errors in calculated results.

SAMPLE DUPLICATE EVALUATION REPORT

General Chemistry

Client Lot #...: F1D070603 **Work Order #...:** MGPJN-SMP MGPJN-DUP **Matrix.....:** WATER

Date Sampled...: 04/07/11 13:43 **Date Received..:** 04/07/11

PARAM	RESULT	DUPLICATE RESULT	UNITS	RPD	RPD LIMIT	METHOD	PREPARATION-ANALYSIS DATE	PREP BATCH #
COD						SD Lot-Sample #:	F1D070603-001	
	ND	ND	mg/L	0	(0-20)	MCAWW 410.4	04/13/11	1104120
			Dilution Factor: 1			Analysis Time..: 00:00		
Total Suspended Solids						SD Lot-Sample #:	F1D070603-001	
	ND	ND	mg/L	0	(0-20)	MCAWW 160.2	04/13-04/14/11	1104140
			Dilution Factor: 1			Analysis Time..: 00:00		
pH (liquid)						SD Lot-Sample #:	F1D070603-001	
	6.6	6.6	No Units	0.15	(0-0.0)	SW846 9040	04/07/11	1097377
			Dilution Factor: 1			Analysis Time..: 16:28		

AECOM Technical Services Inc.

Client Sample ID: 60162412-SMP-PL5-WW-OTH-0512

Radiochemistry

Lab Sample ID: F1D070603-001
Work Order: MGPJN
Matrix: WATER

Date Collected: 04/07/11 1343
Date Received: 04/07/11 1600

Parameter	Result	Qual	Total Uncert. (2 σ+/-)	RL	mdc	Prep Date	Analysis Date
Iso THORIUM (SHORT CT) DOE A-01-R MOD				**pCi/L**		**Batch # 1101244**	**Yld % 81**
Thorium 228	0.12	U	0.14	1.00	0.21	04/11/11	04/13/11
Thorium 230	0.11	U	0.11	1.00	0.12	04/11/11	04/13/11
Thorium 232	0.015	U	0.049	1.00	0.12	04/11/11	04/13/11
Iso URANIUM (SHORT CT) DOE A-01-R MOD				**pCi/L**		**Batch # 1101245**	**Yld % 84**
Uranium 234	0.08	U	0.11	1.00	0.17	04/11/11	04/13/11
Uranium 235/236	0.013	U	0.061	1.00	0.16	04/11/11	04/13/11
Uranium 238	0.020	U	0.070	1.00	0.15	04/11/11	04/13/11
Gross Alpha/Beta EPA 900				**pCi/L**		**Batch # 1101085**	**Yld %**
Gross Alpha	3.0	U	2.7	3.0	3.8	04/11/11	04/14/11
Gross Beta	1.4	U	2.0	4.0	3.3	04/11/11	04/14/11
Radium 228 by GFPC EPA 904 MOD				**pCi/L**		**Batch # 1098147**	**Yld % 90**
Radium 228	-0.03	U	0.19	1.00	0.34	04/08/11	04/13/11
Radium 226 by EPA 903.0 MOD				**pCi/L**		**Batch # 1101145**	**Yld % 79**
Radium (226)	0.16	J	0.11	1.00	0.15	04/11/11	04/13/11

NOTE(S)

Data are incomplete without the case narrative.

MDC is determined by instrument performance only.
Bold results are greater than the MDC.

J Result is greater than sample detection limit but less than stated reporting limit.
U Result is less than the sample detection limit.

METHOD BLANK REPORT

Radiochemistry

Client Lot ID: F1D070603
Matrix: WATER

Parameter	Result	Qual	Total Uncert. (2 σ+/-)	RL	MDC		Prep Date	Lab Sample ID Analysis Date
Radium 228 by GFPC EPA 904 MOD			pCi/L	Batch #	1098147	Yld %	97	F1D080000-147B
Radium 228	0.18	U	0.17	1.00	0.27		04/08/11	04/13/11
Gross Alpha/Beta EPA 900			pCi/L	Batch #	1101085	Yld %		F1D110000-085B
Gross Alpha	0.27	U	0.43	1.50	0.74		04/11/11	04/14/11
Gross Beta	0.007	U	0.63	1.50	1.1		04/11/11	04/14/11
Radium 226 by EPA 903.0 MOD			pCi/L	Batch #	1101145	Yld %	83	F1D110000-145B
Radium (226)	0.035	U	0.082	1.00	0.15		04/11/11	04/12/11
Iso THORIUM (SHORT CT) DOE A-01-R MOD			pCi/L	Batch #	1101244	Yld %	39	F1D110000-244B
Thorium 228	0.12	U	0.16	1.00	0.23		04/11/11	04/13/11
Thorium 230	**0.68**		**0.36**	1.00	**0.20**		**04/11/11**	**04/13/11**
Thorium 232	0.09	U	0.13	1.00	0.12		04/11/11	04/13/11
Iso URANIUM (SHORT CT) DOE A-01-R MOD			pCi/L	Batch #	1101245	Yld %	80	F1D110000-245B
Uranium 234	0.014	U	0.047	1.00	0.11		04/11/11	04/13/11
Uranium 235/236	0.028	U	0.056	1.00	0.076		04/11/11	04/13/11
Uranium 238	**0.068**		**0.079**	1.00	**0.061**		**04/11/11**	**04/13/11**

NOTE(S)

Data are incomplete without the case narrative.

MDC is determined using instrument performance only
Bold results are greater than the MDC.

U Result is less than the sample detection limit.

Laboratory Control Sample Report

Radiochemistry

Client Lot ID: F1D070603
Matrix: WATER

Parameter	Spike Amount	Result	Total Uncert. (2 σ+/-)	MDC	% Yld	% Rec	Lab Sample ID / QC Control Limits
Radium 228 by GFPC EPA 904 MOD			pCi/L	904 MOD			F1D080000-147C
Radium 228	5.60	4.79	0.60	0.31	92	86	(69 - 140)
	Batch #:	1098147		Analysis Date:	04/13/11		
Gross Alpha/Beta EPA 900			pCi/L	900.0 MOD			F1D110000-085C
Gross Alpha	49.4	49.8	5.6	0.8		101	(83 - 128)
Gross Beta	66.2	70.3	6.0	1.1		106	(90 - 115)
	Batch #:	1101085		Analysis Date:	04/14/11		
Radium 226 by EPA 903.0 MOD			pCi/L	903.0 MOD			F1D110000-145C
Radium (226)	11.3	11.4	1.2	0.2	78	101	(62 - 136)
	Batch #:	1101145		Analysis Date:	04/12/11		
Iso THORIUM (SHORT CT) DOE A-01-R MOD			pCi/L	A-01-R MOD			F1D110000-244C
Thorium 230	9.49	9.2	1.2	0.06	77	97	(79 - 122)
	Batch #:	1101244		Analysis Date:	04/13/11		
Iso URANIUM (SHORT CT) DOE A-01-R MOD			pCi/L	A-01-R MOD			F1D110000-245C
Uranium 234	13.1	12.0	1.4	0.1	81	92	(83 - 130)
Uranium 238	13.6	12.6	1.5	0.09	81	93	(86 - 128)
	Batch #:	1101245		Analysis Date:	04/13/11		

NOTE(S)

MDC is determined by instrument performance only
Calculations are performed before rounding to avoid round-off error in calculated results

MATRIX SPIKE REPORT

Radiochemistry

Client Lot Id: F1D010495 Date Sampled: 03/28/11
Matrix: WATER Date Received: 04/01/11

Parameter	Spike Amount	Spike Result	Total Uncert. (2σ +/-)	Spike Yld.	Sample Result	Total Uncert. (2 σ +/-)	QC Sample ID %YLD	QC Sample ID %REC	QC Control Limits
Gross Alpha/Beta EPA 900			pCi/L		900.0 MOD			F1D010495-001	
Gross Beta	602	669	57		20.2	7.6		108	(51-150)
	Batch #:	1101085		Analysis Date:		04/14/11			
Gross Alpha/Beta EPA 900			pCi/L		900.0 MOD			F1D010495-001	
Gross Alpha	449	437	56		27	12		91	(34-150)
	Batch #:	1101085		Analysis Date:		04/14/11			

NOTE (S)

Data are incomplete without the case narrative.

Calculations are performed before rounding to avoid round-off errors in calculated results.

DUPLICATE EVALUATION REPORT

Radiochemistry

Client Lot ID: F1D070603
Matrix: WATER

Date Sampled: 03/28/11
Date Received: 04/01/11

Parameter	SAMPLE Result		Total Uncert. (2σ+/-)	% Yld	DUPLICATE Result		Total Uncert. (2 σ+/-)	% Yld	QC Sample ID Precision	
Gross Alpha/Beta EPA 900				**pCi/L**	**900.0 MOD**				**F1D010495-001**	
Gross Alpha	27		12		13.1	U	9.97		69	%RPD
Gross Beta	20.2		7.6		24.7		8.5		20	%RPD
	Batch #:		1101085	(Sample)	1101085		(Duplicate)			
Radium 228 by GFPC EPA 904 MOD				**pCi/L**	**904 MOD**				**F1D070603-001**	
Radium 228	-0.03	U	0.19	90	0.25	U	0.23	88	256	%RPD
	Batch #:		1098147	(Sample)	1098147		(Duplicate)			
Radium 226 by EPA 903.0 MOD				**pCi/L**	**903.0 MOD**				**F1D070603-001**	
Radium (226)	0.16	J	0.11	79	0.15	J	0.12	88	2	%RPD
	Batch #:		1101145	(Sample)	1101145		(Duplicate)			
Iso THORIUM (SHORT CT) DOE A-01-R MOD				**pCi/L**	**A-01-R MOD**				**F1D070603-001**	
Thorium 228	0.12	U	0.14	81	0.1	U	0.18	74	20	%RPD
Thorium 230	0.11	U	0.11	81	0.22		0.16	74	66	%RPD
Thorium 232	0.015	U	0.049	81	0.051	U	0.089	74	110	%RPD
	Batch #:		1101244	(Sample)	1101244		(Duplicate)			
Iso URANIUM (SHORT CT) DOE A-01-R MOD				**pCi/L**	**A-01-R MOD**				**F1D070603-001**	
Uranium 234	0.08	U	0.11	84	-0.0042	U	0.0083	86	221	%RPD
Uranium 235/236	0.013	U	0.061	84	0.050	U	0.079	86	119	%RPD
Uranium 238	0.020	U	0.070	84	0.0	U	0.019	86	200	%RPD
	Batch #:		1101245	(Sample)	1101245		(Duplicate)			

NOTE(S)

Data are incomplete without the case narrative.
Calculations are performed before rounding to avoid round-off error in calculated results

J Result is greater than sample detection limit but less than stated reporting limit.
U Result is less than the sample detection limit.

F1D070603

CLIENT ANALYSIS SUMMARY

Storage Loc: 1-76,METS,V7,R5

Project Manager: JA | Quote #: 87754 | SDG: F1D070603

Date Received: 2011-04-07

Analytical Due Date: 2011-04-14

Project: | Mallinckrodt St. Louis Plant

Report Due Date: 2011-04-15

PO#: 10372ACM | Report to: Mark Tepperman

RUSH

Report Type: D Expanded Deliverable

Client: 404224 AECOM Technical Services Inc.

#SMPS in LOT: 2 | EDD Code: 00

SAMPLE LOGIN: enter lot # into SDG field. Gamma Spec is as received for 5 BD TAT. Gamma Ra226, Iso U and Iso Th will be logged when initial count is complete. Log ZHE EXTRACTION line item for TCLP VOA. Log TCLP EXTRACTION line item for TCLP analyses. RAD: initial Gamma Spec counted as received. When complete dry/grind and prep for Gamma Ra226,TAR,Iso U and Iso Th. GAMMA SPEC. SHOULD BE COUNTED IN CLIENTS 500ML MARINELLI. RA226/228 - NO INGROWTH REQUIRED!!! RA226/228 MUST BE PREPPED IN SEPERATE ALIQUOTS!!! DO NOT PREP TOGETHER! STANDARD QC ON CLIENT SAMPLE IS REQUIRED FOR ALL ANALYSES.

SAMPLE #	CLIENT SAMPLE ID	Site ID	Client Matrix	DATE/TIME SAMPLED	WORKORDER	I
1	60162412-SMP-PL5-WW-OTH-051			2011-04-07 / 1343	MGPJN	WATER

SAMPLE COMMENTS:

	ZN	QM	SW846	6010B	WATER, ICP Metals	GJ	METALS, TOTAL - 2% HCL	01	STANDARD TEST SET	PROT: M	WRK LOC	06	
	CR	QM	SW846	6010B	WATER, ICP Metals	GJ	METALS, TOTAL - 2% HCL	01	STANDARD TEST SET	PROT: M	WRK LOC	06	
	CU	QM	SW846	6010B	WATER, ICP Metals	GJ	METALS, TOTAL - 2% HCL	01	STANDARD TEST SET	PROT: M	WRK LOC	06	
	FE	QM	SW846	6010B	WATER, ICP Metals	GJ	METALS, TOTAL - 2% HCL	01	STANDARD TEST SET	PROT: M	WRK LOC	06	
	NI	QM	SW846	6010B	WATER, ICP Metals	GJ	METALS, TOTAL - 2% HCL	01	STANDARD TEST SET	PROT: M	WRK LOC	06	
	PB	QM	SW846	6010B	WATER, ICP Metals	GJ	METALS, TOTAL - 2% HCL	01	STANDARD TEST SET	PROT: M	WRK LOC	06	
	CD	QM	SW846	6010B	WATER, ICP Metals	GJ	METALS, TOTAL - 2% HCL	01	STANDARD TEST SET	PROT: M	WRK LOC	06	
	XX	DN	CFR13 6A	624	WATER, 624, VOA	25	PURGE AND TRAP - 25 mL purge (Waters)	01	STANDARD TEST SET	PROT: O	WRK LOC	06	TIC: N
	XX	2I	EML	A-01-R MOD	WATER, Iso URANIUM (SHORT CT)	J2	Extraction Chromatography - Sequential Actinides	01	STANDARD TEST SET	PROT: R	WRK LOC	06	
	XX	2K	EML	A-01-R MOD	WATER, Iso THORIUM (SHORT CT)	J2	Extraction Chromatography - Sequential Actinides	01	STANDARD TEST SET	PROT: R	WRK LOC	06	
	XX	Y9	EPA	900.0 MOD	WATER, Gross Alpha/Beta	FR	Evaporative Preparation, Total	01	STANDARD TEST SET	PROT: R	WRK LOC	06	
	XX	Z4	EPA	904 MOD	WATER, 904 MOD, Ra-226 (NO INGROWTH)	N*	No Ingrowth	2X	SPECIAL PROJECTS	PROT: R	WRK LOC	06	
	XX	ZY	EPA	903.0 MOD	WATER, 903 MOD, Ra-226 (NO INGROWTH)	N*	No Ingrowth	2X	SPECIAL PROJECTS	PROT: R	WRK LOC	06	
	XX	AL	MCAW W	160.2	WATER, 160.2, TSS	88	NO SAMPLE PREPARATION PERFORMED / DIRECT	01	STANDARD TEST SET	PROT: W	WRK LOC	06	
	XX	FJ	SW846	9040	WATER, 9040, pH	88	NO SAMPLE PREPARATION PERFORMED / DIRECT	01	STANDARD TEST SET	PROT: W	WRK LOC	06	
	XX	VO	MCAW W	410.4	WATER, 410.4, COD	21	DIGESTION, NON-METAL/INORGANICS	01	STANDARD TEST SET	PROT: W	WRK LOC	06	
D	CR	QM	SW846	6010B	WATER, ICP Metals	GJ	METALS, TOTAL - 2% HCL	01	STANDARD TEST SET	PROT: M	WRK LOC	06	
D	CD	QM	SW846	6010B	WATER, ICP Metals	GJ	METALS, TOTAL - 2% HCL	01	STANDARD TEST SET	PROT: M	WRK LOC	06	
D	CU	QM	SW846	6010B	WATER, ICP Metals	GJ	METALS, TOTAL - 2% HCL	01	STANDARD TEST SET	PROT: M	WRK LOC	06	
D	ZN	QM	SW846	6010B	WATER, ICP Metals	GJ	METALS, TOTAL - 2% HCL	01	STANDARD TEST SET	PROT: M	WRK LOC	06	
D	PB	QM	SW846	6010B	WATER, ICP Metals	GJ	METALS, TOTAL - 2% HCL	01	STANDARD TEST SET	PROT: M	WRK LOC	06	
D	NI	QM	SW846	6010B	WATER, ICP Metals	GJ	METALS, TOTAL - 2% HCL	01	STANDARD TEST SET	PROT: M	WRK LOC	06	
D	FE	QM	SW846	6010B	WATER, ICP Metals	GJ	METALS, TOTAL - 2% HCL	01	STANDARD TEST SET	PROT: M	WRK LOC	06	
S	CD	QM	SW846	6010B	WATER, ICP Metals	GJ	METALS, TOTAL - 2% HCL	01	STANDARD TEST SET	PROT: M	WRK LOC	06	
S	CR	QM	SW846	6010B	WATER, ICP Metals	GJ	METALS, TOTAL - 2% HCL	01	STANDARD TEST SET	PROT: M	WRK LOC	06	
S	FE	QM	SW846	6010B	WATER, ICP Metals	GJ	METALS, TOTAL - 2% HCL	01	STANDARD TEST SET	PROT: M	WRK LOC	06	
S	NI	QM	SW846	6010B	WATER, ICP Metals	GJ	METALS, TOTAL - 2% HCL	01	STANDARD TEST SET	PROT: M	WRK LOC	06	
S	PB	QM	SW846	6010B	WATER, ICP Metals	GJ	METALS, TOTAL - 2% HCL	01	STANDARD TEST SET	PROT: M	WRK LOC	06	
S	ZN	QM	SW846	6010B	WATER, ICP Metals	GJ	METALS, TOTAL - 2% HCL	01	STANDARD TEST SET	PROT: M	WRK LOC	06	
S	CU	QM	SW846	6010B	WATER, ICP Metals	GJ	METALS, TOTAL - 2% HCL	01	STANDARD TEST SET	PROT: M	WRK LOC	06	
X	XX	Z4	EPA	904 MOD	WATER, 904 MOD, Ra-226 (NO INGROWTH)	N*	No Ingrowth	2X	SPECIAL PROJECTS	PROT: R	WRK LOC	06	

SAMPLE #	CLIENT SAMPLE ID	Site ID	Client Matrix	DATE/TIME SAMPLED	WORKORDER	I
2	VOC BLANKS			2011-04-07 / 0	MGPJ2	WATER

SAMPLE COMMENTS:

F1D070603

CLIENT ANALYSIS SUMMARY

Storage Loc: V7

Date Received: 2011-04-07

Analytical Due Date: 2011-04-14

Report Due Date: 2011-04-15

Report Type: D Expanded Deliverable

EDD Code: 00

Project Manager: JA

Quote #: 87754 SDG: F1D070603

Project: Mallinckrodt St. Louis Plant

PO#: 10372ACM Report to: Mark Tepperman

Client: 404224 AECOM Technical Services Inc.

RUSH

#SMPS In LOT: 2

SAMPLE LOGIN: enter lot # into SDG field. Gamma Spec is as received for 5 BD TAT. Gamma Ra226, Iso U and Iso Th will be logged when initial count is complete.
Log ZHE EXTRACTION line item for TCLP VOA. Log TCLP EXTRACTION line item for TCLP analyses. RAD: Initial Gamma Spec counted as received . When complete
dry/grind and prep for Gamma Ra226,TAR,Iso U and Iso Th. GAMMA SPEC. SHOULD BE COUNTED IN CLIENTS 500ML MARINELLI. RA226/228 - NO INGROWTH REQUIRED!!!
RA226/228 MUST BE PREPPED IN SEPERATE ALIQUOTS!!! DO NOT PREP TOGETHER! STANDARD QC ON CLIENT SAMPLE IS REQUIRED FOR ALL ANALYSES.

XX	DN	CFR13 624 6A	WATER, 624, VOA	25	PURGE AND TRAP - 25 mL purge (Waters)	01	STANDARD TEST SET	PROT: O	WRK LOC	06	TIC: N

St. Louis
13715 Rider Trail North

Earth City, MO 63045
phone 314.298.8566 fax 314.298.8757

Chain of Custody Record

CUR140

TestAmerica
THE LEADER IN ENVIRONMENTAL TESTING

TestAmerica Laboratories, Inc.

Client Contact	Project Manager: Ed Palser	Site Contact: Casey Knutteson	Date: 4/7/11	COC No: XX
AECOM	Tel/Fax: (618)444-5535	Lab Contact: Jayna Awold	Carrier: Test America	1 of 1 COCs
Address 8005 Outer Circle RD	Analysis Turnaround Time			Job No. 60162412
City/State/Zip Brooks City Base, TX 78235	Calendar (C) or Work Days (W) C			
(618)444-5535 Phone	TAT if different from Below			
none FAX	☐ 2 weeks			SDG No.
Project Name: Mallinckrodt C-T Decommissioning	■ 1 week			
Site: St. Louis Plant	☐ 2 days			
P O # 10372ACM	☐ 1 day			

Sample Identification	Sample Date	Sample Time	Sample Type	Matrix	# of Cont.	Filtered Sample	pH	TSS	COD	ICP Metals (Cd, Cr, Cu, Fe, Pb, Ni, Zn)	Volatile Organics (EPA Method 624)	Gross Alpha/Beta	Isotopic Uranium (Alpha Spectrometry)	Radium-226 (GFPC, no decay/ingrowth)	Radium-228 (GFPC - no decay/ingrowth)	Isotopic Thorium (Alpha Spectrometry)	n/a	n/a	n/a	n/a	n/a	n/a	n/a	n/a	Sample Specific Notes:	
60162412-SMP-PL5-WW-OTH-0512	4/7/2011	13:43	Water	Water	15		x	x	x	x	x	x	x	x	x	x	n/a	n/a	n/a	n/a	n/a	n/a	n/a	n/a	* Further Testing if Gross Beta above 50 pci/L	
VOC Blanks	n/a	n/a	n/a	n/a	2		n/a	n/a	n/a	n/a	x	n/a	n/a	n/a	n/a	n/a	n/a	n/a	n/a	n/a	n/a	n/a	n/a	n/a	4x500p, 250p, 500p	
n/a n/a n/a n/a	n/a	n/a	n/a	n/a	n/a		n/a	n/a	n/a	n/a	n/a	n/a	n/a	n/a	n/a	n/a	n/a	n/a	n/a	n/a	n/a	n/a	n/a	n/a	2 vial	n/a
n/a n/a n/a n/a	n/a	n/a	n/a	n/a	n/a		n/a	n/a	n/a	n/a	n/a	n/a	n/a	n/a	n/a	n/a	n/a	n/a	n/a	n/a	n/a	n/a	n/a	n/a		n/a
n/a n/a n/a n/a	n/a	n/a	n/a	n/a	n/a		n/a	n/a	n/a	n/a	n/a	n/a	n/a	n/a	n/a	n/a	n/a	n/a	n/a	n/a	n/a	n/a	n/a	n/a		n/a
n/a n/a n/a n/a	n/a	n/a	n/a	n/a	n/a		n/a	n/a	n/a	n/a	n/a	n/a	n/a	n/a	n/a	n/a	n/a	n/a	n/a	n/a	n/a	n/a	n/a	n/a		n/a
n/a n/a n/a n/a	n/a	n/a	n/a	n/a	n/a		n/a	n/a	n/a	n/a	n/a	n/a	n/a	n/a	n/a	n/a	n/a	n/a	n/a	n/a	n/a	n/a	n/a	n/a		n/a
n/a n/a n/a n/a	n/a	n/a	n/a	n/a	n/a		n/a	n/a	n/a	n/a	n/a	n/a	n/a	n/a	n/a	n/a	n/a	n/a	n/a	n/a	n/a	n/a	n/a	n/a		n/a
n/a n/a n/a n/a	n/a	n/a	n/a	n/a	n/a		n/a	n/a	n/a	n/a	n/a	n/a	n/a	n/a	n/a	n/a	n/a	n/a	n/a	n/a	n/a	n/a	n/a	n/a		n/a
n/a n/a n/a n/a	n/a	n/a	n/a	n/a	n/a		n/a	n/a	n/a	n/a	n/a	n/a	n/a	n/a	n/a	n/a	n/a	n/a	n/a	n/a	n/a	n/a	n/a	n/a		n/a

Preservation Used: 1= Ice, 2= HCl; 3= H2SO4; 4=HNO3; 5=NaOH; 6= Other _____

Possible Hazard Identification
■ *Non-Hazard* ☐ *Flammable* ☐ *Skin Irritant* *Poison B* ☐ *Unknown* ☐

Sample Disposal (A fee may be assessed if samples are retained longer than 1 month)
☐ *Return To Client* ☐ *Disposal By Lab* ■ *Archive For* 1 *Months*

Special Instructions/QC Requirements & Comments: Possible hazards include radiological. Sample methods to comply with MSD Ordinance 12559 standards.

Relinquished by:	Company:	Date/Time:	Received by:	Company:	Date/Time:
[signature]	Aecom/TA	4/7/11 1615	[signature]	TA	4/7/11 1445
Relinquished by:	Company:	Date/Time:	Received by:	Company:	Date/Time:
[signature]	TA	4/7/11 1445 1560	Gil Clarke	TA	4.7.11 1600
Relinquished by:	Company:	Date/Time:	Received by:	Company:	Date/Time:

Lot F1D070603

TestAmerica - St. Louis

TestAmerica
THE LEADER IN ENVIRONMENTAL TESTING

Lot #(s): F1D070603

CONDITION UPON RECEIPT FORM

Client: AECOM
Quote No: 87754
COC/RFA No: XX

140

Initiated By: [illegible] Date: 4.7.11 Time: 1600

Shipping Information

Shipper: FedEx UPS DHL Courier Client Other: _____ Multiple Packages: Y N

Shipping # (s):*

1. _____ 6. _____
2. _____ 7. _____
3. _____ 8. _____
4. _____ 9. _____
5. _____ 10. _____

Sample Temperature (s):**

1. 15 6. _____
2. _____ 7. _____
3. _____ 8. _____
4. _____ 9. _____
5. _____ 10. _____

*Numbered shipping lines correspond to Numbered Sample Temp lines

**Sample must be received at 4°C ± 2°C- If not, note contents below. Temperature variance does NOT affect the following: Metals-Liquid or Rad tests- Liquid or Solids

Condition (Circle "Y" for yes, "N" for no and "N/A" for not applicable):

1.	Y N	Are there custody seals present on the cooler?	8.	Y N	Are there custody seals present on bottles?
2.	Y N N/A	Do custody seals on cooler appear to be tampered with?	9.	Y N N/A	Do custody seals on bottles appear to be tampered with?
3.	Y N	Were contents of cooler frisked after opening, but before unpacking?	10.	Y N N/A	Was sample received with proper pH[1]? (If not, make note below)
4.	Y N	Sample received with Chain of Custody?	11.	Y N	Sample received in proper containers?
5.	Y N N/A	Does the Chain of Custody match sample ID's on the container(s)?	12.	Y N N/A	Headspace in VOA or TOX liquid samples? (If Yes, note sample ID's below)
6.	Y N	Was sample received broken?	13.	Y N N/A	Was Internal COC/Workshare received?
7.	Y N	Is sample volume sufficient for analysis?	14.	Y N N/A	Was pH taken by original TestAmerica lab?

[1] For DOE-AL (Pantex, LANL, Sandia) sites, pH of ALL containers received must be verified, EXCEPT VOA, TOX and soils.

Notes:
Samples just collected

Corrective Action:
- ☐ Client Contact Name: _____ Informed by: _____
- ☐ Sample(s) processed "as is"
- ☐ Sample(s) on hold until: _____ If released, notify: _____
- Project Management Review: [illegible] Date: 04-08-11

THIS FORM MUST BE COMPLETED AT THE TIME THE ITEMS ARE BEING CHECKED IN. IF ANY ITEM IS COMPLETED BY SOMEONE OTHER THAN THE INITIATOR, THEN THAT PERSON IS REQUIRED TO APPLY THEIR INITIAL AND THE DATE NEXT TO THAT ITEM.

ADMIN-0004, REVISED 10/21/08 \\Slsvr01\QA\FORMS\ST-LOUIS\ADMIN\Admin004 rev11.doc

Metropolitan St. Louis Sewer District

Division of Environmental Compliance
10 East Grand Avenue
St. Louis, MO 63147-2913
Phone: 314.768.6200 www.stlmsd.com

April 14, 2010

Julie Summers
MALLINCKRODT
3600 North Second St.
St. Louis, MO 63147

Dear Ms. Summers:

We have reviewed your application dated April 13, 2011 requesting approval to discharge 1,000 gallons of wastewater to the Metropolitan St. Louis Sewer District for treatment. This wastewater is a 40% ethylene glycol solution from the chiller system located west of the boiler house of the Mallinckrodt facility located at 3600 North Second Street, St. Louis, Missouri. We understand that the wastewater will be discharged through sampling point 010.

Based on the information you provided, this wastewater meets MSD Ordinance 12559 standards and is approved for discharge into a sanitary sewer on site. Due to the high ethylene glycol concentration, the discharge is limited to 420 gallons per hour. This approval is valid for 30 days from the date of this letter.

You must be certain the waste is discharged into a sanitary or combined sewer inlet only. This letter does not authorize any discharge to a separate storm sewer, or to any watercourse, as any such discharge would be in violation of state and federal laws. **Please notify me at the number below when the discharge is to commence, and please ensure the onsite personnel discharging the wastewater in question are provided with a copy of this letter.**

For billing purposes associated with this high strength wastewater, you must confirm the volume of this wastewater discharged to us, in writing, at the completion of the discharge. This report is due no later than 28 days after this approval expires. Please refer to this letter and include the date of the discharge when providing that figure. Under the provisions of Ordinance 13021, you will be billed by invoice at the billing rate in effect at the time of discharge. The current rate contained in MSD Ordinance 13021 is $298.36 per ton for COD over 600 mg/L. Using the assumed COD concentration based on the percent of ethylene glycol contained in the wastewater in question, and the proposed discharge volume provided in your application, it is estimated that you will be discharging just under two tons of COD over 600 mg/L. (Our quantitative estimate is 1.67 tons COD times $298.36.) Please do not pay this amount until you receive our invoice.

This discharge has been approved based upon the information and sample analysis you provided and is subject to the conditions stated above. This approval may be revoked by the District at any time if any of the information is found to be incorrect, or if the conditions of this approval are violated. Also, if the discharge causes any operational or maintenance problem within the District's collection or treatment system, or results in violations of any conditions of the District's NPDES permit, Mallinckrodt will be considered responsible for damages.

If you have any questions, please call me at (314) 436-8755.

Sincerely,
METROPOLITAN ST. LOUIS SEWER DISTRICT

Steven M. Grace

Steve Grace
Environmental Assistant Engineer

bv

pc: Brian Gibson
Doug Mendoza
File: IU, MALLINCKRODT INC [2112059600]

C1A

SD EVALUATION CHECKLIST - ON SITE

APPLICATION INFORMATION

Source Name: Mallinckrodt Inc. Evaluated by: SMG

Premise Address: 3600 N. 2nd St. Date: 4/14/11

Send approval letter to applicant

Application Dated: 4/13/11 Received: 4/13/11 All Requested Info. Received: 4/13/11

SOURCE FILING/DESCRIPTION

1 - Source in PIMS? (Y) / N
2 - If No, on IU Cross-Ref list? * Y / N
3 - If No, MSD Account # from E-CIS? Y / N
4 - If none, on "Source" list (pre-IMS)? ** Y / N
5 - If No, assigned SOUR# from PIMS.

* o:\costrecovery\cross reference xls file

** o:\costrecovery\sourlist xls file

SOURCE TYPE (circle): (IU) / Dead IU / SD

INDUSTRY ID: 21120596-00

Sample Point: No. Assigned: 820 Description: 40% ethylene glycol solution from rental chiller system assoc. w/ Boiler House

Normal WW flow from premise? N/A _____ ccf/month, 2,992,101 GPD, _____ GPH. from SP010

REGULATORY STATUS

Is waste a Hazardous Waste? (N) / Y _____

Categorical standards apply? (N) / Y _____

Contain PCB/ asbestos/ radioactive/ dioxin/ used oil? (N) / Y _____

Regulatory Agency Oversight? (N) / Y _____

DISCHARGE CONSIDERATIONS At MSD's connection:

Ordinance Limits (12559, p32) exceeded? (N) / Y _____

Ordinance other limits exceeded (dye, flash pt <140F, temp >140F, obstruction, nuisance foaming/odor, corrosion causing): (N) / Y _____

Water Quality Standard exceeded? (N) / Y _____

Fumes in sewer exceed PEL/TLV limits? (N) / Y _____

Vapors in sewer exceed 10% of LEL? (N) / Y _____

RECOMMENDATION: (APPROVE) / DENY (cc WWTP Mgr for timed discharge)

APPROVAL CONDITIONS:

Timed Discharge (COD/BOD/WQ/foam): N / Y Limit = 420 gal/hour

Require Treatment before Discharge? (N) / Y _____

Laboratory analysis fee due? (N) / Y $_____

SMR required? (N) / Y Frequency/analysis: _____

SMR log: (N/A) / Remediation.xls / Nonremediation.xls

Volume Billing applies (water unmetered or credited)? (N) / Y

Bill High Strength? N / (Y) Yes, If use >60,000 gal/month water ✓ and, > norm WW strgth

Surcharge calculation attached: N/A / N / (Y)

Expiration log updated: (N/A) / N / Y

O:\CostRecovery\Special Discharge\C1a.Checklist.doc

On-Site Special Discharge High Strength Flow Rate and Surcharge Calculator

1 GENERAL INFORMATION:

Date: 04/14/11
Calculated by: Steve Grace
Source name: MALLINCKRODT INC, SP820
Waste material: 40% ethylene glycol soultion at Boiler house
Discharge volume: 1,000 gallons

2 STRENGTH INFORMATION:

Sample BOD =	0	mg/l =	0	lbs BOD to be discharged
Sample COD =	400,000	mg/l =	3336	lbs COD to be discharged
Sample TSS =	0	mg/l =	for surcharge calculation only	

3 PLANT DATA: 2010

Treatment area: Bissell

	Flow (MGD)	BOD (mg/L)	COD (mg/L)	BOD (lb/hr)	COD (lb/hr)	Max Loading = 10% BOD (lb/hr)	COD (lb/hr)
Bissell	**140**	**146**	**292**	**7,113**	**14,227**	**711**	**1,423**
Coldwater	26	188	377	1,704	3,408	170	341
Fenton	5	388	776	679	1,357	68	136
Grand Glaize	16	129	405	708	2,218	71	222
Lemay	131	78	210	3,531	9,584	353	958
Lower Meramec	13	124	409	543	1,785	54	179
Missouri River	27	280	559	2,671	5,341	267	534

4 MINIMUM REQUIRED FLOW RATE:

	BOD (hours	BOD (gpm)	COD (hours)	COD (gpm)
Bissell	**0.00**	**0**	**2.34**	**7**
Coldwater	0.00	0	9.79	2
Fenton	0.00	0	24.58	1
Grand Glaize	0.00	0	15.04	1
Lemay	0.00	0	3.48	5
Lower Meramec	0.00	0	18.69	1
Missouri River	0.00	0	6.25	3

5 SURCHARGE AND VOLUME BILLING

Is volume subject to billing? no (yes/no)
Ratio of BOD/COD = 0.00

(Sample BOD) - 300 = 0 mg/l subject to surcharge
(sample COD) - 600 = 399400 mg/l subject to surcharge
(sample TSS) - 300 = 0 mg/l subject to surcharge

If BOD/COD ratio <= 0.35, the following calculations use the COD value. Otherwise they use the BOD value

Current rates under Ordinance: 13021

Volume = $ 2.02 /CcF
BOD = $ 596.72 /ton
COD = $ 298.36 /ton
TSS = $ 222.62 /ton

Flow charge = $ - based on volume = 1.3 CcF
BOD surcharge = $ -
COD surcharge = $ 497.05
TSS surcharge = $ -
Total discharge charge = $ 497.05
Customer charge = $ 497.05 DEC charges special discharge customers for total charges > $20.00
Approximate charge/gallon = $ 0.50

Comments

require volume report for billing purposes. Smg

Steve Grace

From: Summers, Julie [Julie.Summers@Covidien.com]
Sent: Wednesday, April 13, 2011 8:24 AM
To: Steve Grace
Subject: Mallinckrodt Glycol Special Discharge Request April 13, 2011
Attachments: Mallinckrodt Boilerhouse Glycol Special Discharge Request April 13, 2011.pdf

Steve,
Per my voicemail attached is a special discharge request for 1,000 gallons of 40% ethylene glycol/ 60% water solution from a chiller unit at the Mallinckrodt St. Louis Plant. As I mentioned on the phone, if possible, they wanted to discharge the material on Friday 4/15. Please let me know if you have any questions.

Thanks,

Julie Summers
Environmental Manager
Covidien/Mallinckrodt
3600 North 2nd Street
St. Louis, MO 63147
314-654-1969 Phone
314-654-1251 Fax

Metropolitan St. Louis Sewer District
2350 Market Street
St. Louis, MO 63103

APPLICATION FOR SPECIAL DISCHARGE APPROVAL

I. WASTEWATER SOURCE IDENTIFICATION:

Site Name: Mallinckrodt
Premise Address: 3600 N 2nd Street
City: St. Louis State: MO Zip: 63147
Owner: Mallinckrodt
Contact Person: Julie Summers
Title: Environmental Manager
Phone: 314-654-1969 Fax: 314-654-1251

II. APPLICANT (mailing information):

Applicant Name: Julie Summers
Title: Environmental Manager
Company Name: Mallinckrodt
Mailing Address: 3600 North 2nd St
City: St Louis State: MO Zip: 63147
Phone: 314-654-1969 Fax: 314-654-1251

III. A. MATERIAL TO BE DISCHARGED (check all applicable boxes):

1. Wastewater description/location: Boilerhouse Ethylene glycol/water
2. Process/activity generating wastewater: Boilerhouse rental chiller
3. Physical and chemical composition: List all constituents, and known or potentially present regulated contaminants below.
   ☐ See separate listing enclosed, and/or ☐ See analytical results enclosed, and/or ☑ Material Safety Data Sheet enclosed.

DESCRIPTION	RANGE	UNIT
Ethylene Glycol	40	%
water	60	%

DESCRIPTION *(continued)*	RANGE	UNIT

4. Is this wastewater from a process subject to EPA's categorical standards in 40 CFR Subchapter N? ☐ Yes ☑ No
   a. If yes, the applicable standards are in: 40 CFR Part _____, Subpart _____ ☐ Existing source ☐ New source
5. Does this wastewater contain polychlorinated biphenyls, asbestos or radioactive material? ☐ Yes ☑ No
   a. If yes, describe: _____
6. Representative sample: ☐ Laboratory results attached, and/or ☐ Sample provided (1/2 gallon minimum, clear container)
   a. Sample collection point/location: _____ Collection method: _____
   b. Sampler's name/Co.: _____ Sample date/time: _____
   c. Attach chain of custody as available
7. Discharge will occur over the following time period: ☑ < 30 days ☐ ≥ Two years ☐ Other: _____
   a. Expected total volume of wastewater to be discharged over the time period above: 1000 Gallons
   b. Proposed discharge volume: 1000 Gallons, at a frequency of: ☑ One time ☐ Daily ☐ Weekly ☐ Monthly ☐ Once/three months ☐ Once/six months ☐ Other: _____
8. Pretreatment of wastewater prior to discharge: ☐ None ☑ Yes, describe: pH adjust at main plant outfall SP010
   a. If yes, attach site plan, pretreatment system schematic, and design specifications.
9. Wastewater from a remediation project under: ☐ Superfund/CERCLA ☐ RCRA ☐ Voluntary program ☐ UST ☑ Not applicable
   a. If from a remediation project, briefly describe the past and present utilization of the property: _____

III.B. MATERIAL FROM UNDERGROUND STORAGE TANK SOURCE

☑ **Not applicable (go to Section IV)**

Please answer the following questions if you are requesting to discharge wastewater associated with an underground storage tank system.

1. a. Wastewater from: ☐ Inside UST(s) ☐ UST system pit ☐ Excavation outside UST system pit ☐ Monitoring well ☐ Groundwater remediation system

   b. UST project involves wastewater from: ☐ UST(s) closed in place ☐ UST(s) removed ☐ Remediation ☐ Upgrade ☐ Maintenance activities ☐ Well monitoring ☐ Other, explain: _____

   c. If wastewater is from a closure project, how long has UST(s) been out of service: _____ years

2. a. State assigned UST site identification number: _____ ☐ Not applicable

   b. Number of USTs affected: _____ ☐ Unknown

   c. For the UST(s) involved, their state identification number(s): _____ ☐ Not applicable

   d. Service Station Identification Number, as applicable: _____

3. Tank contents/former contents: ☐ Gasoline ☐ #2 diesel ☐ Used oil ☐ Unknown ☐ Other: _____

IV. DISCHARGE LOCATION

1. ☑ On-site. Describe proposed point of entry to sewer and the discharge rate (must be a sanitary or combined sewer): _____

   Plant sewer to main outfall SP010 Note: Range of discharge must not surcharge sewer line.

2. ☐ Haul to MSD Bissell Point Hauled Waste Receiving Station at 10 E. Grand, St. Louis, MO.

   a. Transporters Name: _____ and MSD Hauler ID Number: _____

   b. Hazardous Waste Certification:

   For wastewater which is hauled to MSD's Bissell Point Hauled Waste Receiving Station, I hereby certify that to the best of my knowledge and belief, the above hauled waste is not classified as a RCRA "hazardous waste" as defined by the MDNR in 10 CSR 25 or USEPA in 40 CFR Part 261.

   Applicant Name (print): _____

   Signature: _____ **Date:** _____

ADDITIONAL INFORMATION:

_____

V. APPLICANT SIGNATURE AND CERTIFICATION

This application must be signed by the applicant: either the source contact, or a contractor or agent directly responsible for site activities.

I hereby certify that I am directly responsible for activities at the site regarding the wastewater to be discharged, and to the best of my knowledge and belief, based on appropriate inquiry, the information in this application is true, complete, and accurate. The samples or analyses submitted are representative of the materials to be discharged. If granted approval to discharge, I agree to abide by the MSD Ordinances, and all applicable federal, state and local regulations. I agree to pay the costs of any pre-approval analyses performed by MSD and to pay any applicable disposal charges for the volume and strength of the wastes discharged.

Applicant Name (print): Julie Summers

Signature: Julie Summers **Date:** 4/13/11

FOR MSD USE ONLY:

File Name: Mallinckrodt Inc. ID No. 21120596-00 Sample Point No. 820

MSDS *Material Safety Data Sheet*

From: **Mallinckrodt Baker, Inc.**
222 Red School Lane
Phillipsburg, NJ 08865

Mallinckrodt CHEMICALS J.T.Baker

24 Hour Emergency Telephone: 908-859-2151
CHEMTREC: 1-800-424-9300

National Response in Canada
CANUTEC: 613-996-6666

Outside U.S. and Canada
Chemtrec: 703-527-3887

NOTE: CHEMTREC, CANUTEC and National Response Center emergency numbers to be used only in the event of chemical emergencies involving a spill, leak, fire, exposure or accident involving chemicals.

All non-emergency questions should be directed to Customer Service (1-800-582-2537) for assistance.

ETHYLENE GLYCOL

1. Product Identification

Synonyms: 1,2-Ethanediol; glycol; 1,2-Dihydroxyethane; Ethylene Alcohol; Ethulene Dihydrate
CAS No.: 107-21-1
Molecular Weight: 62.07
Chemical Formula: CH2OHCH2OH
Product Codes:
J.T. Baker: 5387, 5845, 9140, 9298, 9300, 9346, 9356, L715
Mallinckrodt: 5001, 5037

2. Composition/Information on Ingredients

Ingredient	CAS No	Percent	Hazardous
Ethylene Glycol	107-21-1	99 - 100%	Yes

3. Hazards Identification

Emergency Overview

WARNING! HARMFUL OR FATAL IF SWALLOWED. HARMFUL IF INHALED OR ABSORBED THROUGH SKIN. MAY CAUSE ALLERGIC SKIN REACTION. MAY CAUSE IRRITATION TO SKIN, EYES, AND RESPIRATORY TRACT. AFFECTS CENTRAL NERVOUS SYSTEM.

SAF-T-DATA(tm) Ratings (Provided here for your convenience)

Health Rating: 2 - Moderate (Life)
Flammability Rating: 1 - Slight
Reactivity Rating: 1 - Slight
Contact Rating: 3 - Severe (Life)
Lab Protective Equip: GOGGLES & SHIELD; LAB COAT & APRON; VENT HOOD; PROPER GLOVES
Storage Color Code: Green (General Storage)

Potential Health Effects

Inhalation:
Vapor inhalation is generally not a problem unless heated or misted. Exposure to vapors over an extended time period has caused throat irritation and headache. May cause nausea, vomiting, dizziness and drowsiness. Pulmonary edema and central nervous system depression may also develop. When heated or misted, has produced rapid, involuntary eye movement and coma.
Ingestion:
Initial symptoms in massive dosage parallel alcohol intoxication, progressing to CNS depression, vomiting, headache, rapid respiratory and heart rate, lowered blood pressure, stupor, collapse, and unconsciousness with convulsions. Death from respiratory arrest or cardiovascular collapse may follow. Lethal dose in humans: 100 ml (3-4 ounces).
Skin Contact:
Minor skin irritation and penetration may occur.
Eye Contact:
Splashes may cause irritation, pain, eye damage.
Chronic Exposure:
Repeated small exposures by any route can cause severe kidney problems. Brain damage may also occur. Skin allergy can develop. May damage the developing fetus.
Aggravation of Pre-existing Conditions:
Persons with pre-existing skin disorders, eye problems, or impaired liver, kidney, or respiratory function may be more susceptible to the effects of this substance.

4. First Aid Measures

Inhalation:
Remove to fresh air. If not breathing, give artificial respiration. If breathing is difficult, give oxygen. Call a physician.
Ingestion:
Induce vomiting immediately as directed by medical personnel. Never give anything by mouth to an unconscious person. Get medical attention.
Skin Contact:
Remove any contaminated clothing. Wash skin with soap and water for at least 15 minutes. Get medical attention if irritation develops or persists.
Eye Contact:
Immediately flush eyes with plenty of water for at least 15 minutes, lifting lower and upper eyelids occasionally. Get medical attention immediately.

Note to Physician:
Give sodium bicarbonate intravenously to treat acidosis. Urinalysis may show low specific gravity, proteinuria, pyuria, cylindruria, hematuria, calcium oxide, and hippuric acid crystals. Ethanol can be used in antidotal treatment but monitor blood glucose when administering ethanol because it can cause hypoglycemia. Consider infusion of a diuretic such as mannitol to help prevent or control brain edema and hemodialysis to remove ethylene glycol from circulation.

5. Fire Fighting Measures

Fire:
Flash point: 111C (232F) CC
Autoignition temperature: 398C (748F)
Flammable limits in air % by volume:
lel: 3.2; uel: 15.3
Slight to moderate fire hazard when exposed to heat or flame.

Explosion:
Above flash point, vapor-air mixtures are explosive within flammable limits noted above. Containers may explode when involved in a fire.
Fire Extinguishing Media:
Dry chemical, foam or carbon dioxide. Water or foam may cause frothing. Water spray may be used to extinguish surrounding fire and cool exposed containers. Water spray will also reduce fume and irritant gases.
Special Information:
In the event of a fire, wear full protective clothing and NIOSH-approved self-contained breathing apparatus with full facepiece operated in the pressure demand or other positive pressure mode. Toxic gases and vapors may be released if involved in a fire.

6. Accidental Release Measures

Ventilate area of leak or spill. Remove all sources of ignition. Wear appropriate personal protective equipment as specified in Section 8. Isolate hazard area. Keep unnecessary and unprotected personnel from entering. Contain and recover liquid when possible. Use non-sparking tools and equipment. Collect liquid in an appropriate container or absorb with an inert material (e. g., vermiculite, dry sand, earth), and place in a chemical waste container. Do not use combustible materials, such as saw dust. Do not flush to sewer! US Regulations (CERCLA) require reporting spills and releases to soil, water and air in excess of reportable quantities. The toll free number for the US Coast Guard National Response Center is (800) 424-8802.

7. Handling and Storage

Keep in a tightly closed container, stored in a cool, dry, ventilated area. Protect against physical damage. Separate from acids and oxidizing materials. Containers of this material may be hazardous when empty since they retain product residues (vapors, liquid); observe all warnings and precautions listed for the product.

8. Exposure Controls/Personal Protection

Airborne Exposure Limits:
Ethylene Glycol [107-21-1]:

-ACGIH Short-Term Exposure Limit (STEL):
100 mg/m3 Ceiling (aerosol only)
Ventilation System:
A system of local and/or general exhaust is recommended to keep employee exposures below the Airborne Exposure Limits. Local exhaust ventilation is generally preferred because it can control the emissions of the contaminant at its source, preventing dispersion of it into the general work area. Please refer to the ACGIH document, *Industrial Ventilation, A Manual of Recommended Practices*, most recent edition, for details.
Personal Respirators (NIOSH Approved):
If the exposure limit is exceeded, a half-face respirator with an organic vapor cartridge and particulate filter (NIOSH type P95 or R95 filter) may be worn for up to ten times the exposure limit or the maximum use concentration specified by the appropriate regulatory agency or respirator supplier, whichever is lowest. A full-face piece respirator with an organic vapor cartridge and particulate filter (NIOSH P100 or R100 filter) may be worn up to 50 times the exposure limit, or the maximum use concentration specified by the appropriate regulatory agency or respirator supplier, whichever is lowest. Please note that N series filters are not recommended for this material. For emergencies or instances where the exposure levels are not known, use a full-face piece positive-pressure, air-supplied respirator. WARNING: Air-purifying respirators do not protect workers in oxygen-deficient atmospheres.
Skin Protection:
Wear protective gloves and clean body-covering clothing.
Eye Protection:

Use chemical safety goggles. Maintain eye wash fountain and quick-drench facilities in work area.

9. Physical and Chemical Properties

Appearance:
Clear oily liquid.
Odor:
Odorless.
Solubility:
Miscible in water.
Specific Gravity:
1.1 @20C/4C
pH:
No information found.
% Volatiles by volume @ 21C (70F):
100
Boiling Point:
197.6C (388F)
Melting Point:
-13C (9F)
Vapor Density (Air=1):
2.14
Vapor Pressure (mm Hg):
0.06 @ 20C (68F)
Evaporation Rate (BuAc=1):
No information found.

10. Stability and Reactivity

Stability:
Stable under ordinary conditions of use and storage.
Hazardous Decomposition Products:
Carbon dioxide and carbon monoxide may form when heated to decomposition. May produce acrid smoke and irritating fumes when heated to decomposition.
Hazardous Polymerization:
Will not occur.
Incompatibilities:
Strong oxidizing agents. Reacts violently with chlorosulfonic acid, oleum, sulfuric acid, perchloric acid. Causes ignition at room temperature with chromium trioxide, potassium permanganate and sodium peroxide; causes ignition at 212F(100C) with ammonium dichromate, silver chlorate, sodium chloride and uranyl nitrate.
Conditions to Avoid:
Heat, flames, ignition sources, water (absorbs readily) and incompatibles.

11. Toxicological Information

Toxicological Data:
Oral rat LD50: 4700 mg/kg; skin rabbit LD50: 9530 mg/kg.
Irritation - skin rabbit: 555 mg(open), mild; eye rabbit: 500mg/24H, mild.
Investigated as a tumorigen, mutagen, reproductive effector.
Reproductive Toxicity:
Has shown teratogenic effects in laboratory animals.

```
--------\Cancer Lists\-----------------------------------------------------
                                        ---NTP Carcinogen---
```

Ingredient	Known	Anticipated	IARC Category
Ethylene Glycol (107-21-1)	No	No	None

12. Ecological Information

Environmental Fate:
When released into the soil, this material is expected to readily biodegrade. When released into the soil, this material is expected to leach into groundwater. When released into the soil, this material is not expected to evaporate significantly. When released into water, this material is expected to readily biodegrade. When released into the water, this material is expected to have a half-life between 1 and 10 days. This material is not expected to significantly bioaccumulate. This material has a log octanol-water partition coefficient of less than 3.0. When released into water, this material is not expected to evaporate significantly. When released into the air, this material is expected to be readily degraded by reaction with photochemically produced hydroxyl radicals. When released into the air, this material is expected to have a half-life between 1 and 10 days.
Environmental Toxicity:
The LC50/96-hour values for fish are over 100 mg/l.

13. Disposal Considerations

Whatever cannot be saved for recovery or recycling should be managed in an appropriate and approved waste disposal facility. Processing, use or contamination of this product may change the waste management options. State and local disposal regulations may differ from federal disposal regulations. Dispose of container and unused contents in accordance with federal, state and local requirements.

14. Transport Information

Not regulated.

15. Regulatory Information

--------\Chemical Inventory Status - Part 1\--------

Ingredient	TSCA	EC	Japan	Australia
Ethylene Glycol (107-21-1)	Yes	Yes	Yes	Yes

--------\Chemical Inventory Status - Part 2\--------

Ingredient	Korea	--Canada-- DSL	NDSL	Phil.
Ethylene Glycol (107-21-1)	Yes	Yes	No	Yes

--------\Federal, State & International Regulations - Part 1\--------

Ingredient	-SARA 302- RQ	TPQ	------SARA 313------ List	Chemical Catg.
Ethylene Glycol (107-21-1)	No	No	Yes	No

--------\Federal, State & International Regulations - Part 2\--------

Ingredient	CERCLA	-RCRA- 261.33	-TSCA- 8(d)
Ethylene Glycol (107-21-1)	5000	No	No

Chemical Weapons Convention: No TSCA 12(b): No CDTA: No
SARA 311/312: Acute: Yes Chronic: Yes Fire: No Pressure: No
Reactivity: No (Pure / Liquid)

Australian Hazchem Code: None allocated.
Poison Schedule: None allocated.
WHMIS:
This MSDS has been prepared according to the hazard criteria of the Controlled Products Regulations (CPR) and the MSDS contains all of the information required by the CPR.

16. Other Information

NFPA Ratings: Health: **1** Flammability: **1** Reactivity: **0**
Label Hazard Warning:
WARNING! HARMFUL OR FATAL IF SWALLOWED. HARMFUL IF INHALED OR ABSORBED THROUGH SKIN. MAY CAUSE ALLERGIC SKIN REACTION. MAY CAUSE IRRITATION TO SKIN, EYES, AND RESPIRATORY TRACT. AFFECTS CENTRAL NERVOUS SYSTEM.
Label Precautions:
Do not breathe vapor or mist.
Use only with adequate ventilation.
Keep container closed.
Avoid contact with eyes, skin and clothing.
Wash thoroughly after handling.
Label First Aid:
If inhaled, remove to fresh air. If not breathing, give artificial respiration. If breathing is difficult, give oxygen. In case of contact, immediately flush skin or eyes with plenty of water for at least 15 minutes. Call a physician if irritation develops or persists. If swallowed, give water or milk to drink and induce vomiting. Never give anything by mouth to an unconscious person. In all cases call a physician.
Product Use:
Laboratory Reagent.
Revision Information:
No Changes.
Disclaimer:
****
Mallinckrodt Baker, Inc. provides the information contained herein in good faith but makes no representation as to its comprehensiveness or accuracy. This document is intended only as a guide to the appropriate precautionary handling of the material by a properly trained person using this product. Individuals receiving the information must exercise their independent judgment in determining its appropriateness for a particular purpose. MALLINCKRODT BAKER, INC. MAKES NO REPRESENTATIONS OR WARRANTIES, EITHER EXPRESS OR IMPLIED, INCLUDING WITHOUT LIMITATION ANY WARRANTIES OF MERCHANTABILITY, FITNESS FOR A PARTICULAR PURPOSE WITH RESPECT TO THE INFORMATION SET FORTH HEREIN OR THE PRODUCT TO WHICH THE INFORMATION REFERS. ACCORDINGLY, MALLINCKRODT BAKER, INC. WILL NOT BE RESPONSIBLE FOR DAMAGES RESULTING FROM USE OF OR RELIANCE UPON THIS INFORMATION.
****
Prepared by: Environmental Health & Safety
Phone Number: (314) 654-1600 (U.S.A.)

Steve Grace

IU-Mallinckrodt Inc.

2112059 6-00
SP850

From: Steve Grace
Sent: Thursday, April 07, 2011 9:49 AM
To: 'Summers, Julie'
Cc: Burke, Karen
Subject: RE: CT Excavation Discharge #3

Hello Julie,

Sorry for the delay...been pulled in a couple different directions this week. A review of the laboratory analytical data for Discharge 003 from the C-T Phase II decommissioning activities indicated this batch meets MSD Ordinance 12559 standards along with those outlined in 10 CFR Part 20, Appendix B, Table 3, and is approved for discharge into a combined sewer identified on MSD's base map as Inlet 18D1-395C. As a general reminder, the discharge into the sewer must be controlled at a rate that will not surcharge the lines in that area. In addition, the volume of this batch of wastewater must be confirmed in writing no later than 28 days after the date of this discharge. The approval for Discharge 003 is valid for 30 days from the date of this email.

Please contact me should you have any questions or require additional information.

Thank you,
Steve Grace

From: Summers, Julie [mailto:Julie.Summers@Covidien.com]
Sent: Tuesday, April 05, 2011 7:38 AM
To: Steve Grace
Cc: Burke, Karen
Subject: CT Excavation Discharge #3

Steve,
Mallinckrodt requests permission to discharge 40,000 gallons of treated rainwater and groundwater collected as part of the C-T Phase II decommissioning activities. The wastewater discharge will be identified as Discharge 003. The laboratory analytical results demonstrate that the discharge will comply with the requirements of the Metropolitan St. Louis Sewer District as set forth in their letter to Lisa Meyer dated January 21, 2011. In addition, the discharge meets the monthly average concentrations for release to sanitary sewers per the requirements of 10 CFR 20.2003. Both a discharge summary and the detailed laboratory analytical results are attached for your information.

Thanks,
Julie Summers
Environmental Manager
Covidien/Mallinckrodt
3600 North 2nd Street
St. Louis, MO 63147
314-654-1969 Phone
314-654-1251 Fax

Wastewater Discharge 003 - Analytical Results Summary

Sample ID: 60162412-SMP-PL5-WA-OTH-0368

Analyte	Units	Limit	Concentration	Qualifiers[1]
VOCs				
Acrolein	mg/L		< 0.01	U
Acrylonitrile	mg/L		< 0.01	U
Benzene	mg/L		< 0.001	U
Bromoform	mg/L		< 0.001	U
Bromomethane	mg/L		< 0.002	U
Carbon tetrachloride	mg/L		< 0.001	U
Chlorobenzene	mg/L		< 0.001	U
Chlorodibromomethane	mg/L		< 0.001	U
Chloroethane	mg/L		< 0.002	U
Chloroform	mg/L		0.0004	J
Chloromethane	mg/L		< 0.002	U
Dichlorobromomethane	mg/L		0.00016	J
1,1- Dichloroethane	mg/L		< 0.001	U
1,2- Dichloroethane	mg/L		< 0.001	U
1,1- Dichloroethene	mg/L		< 0.001	U
1,2- Dichloroethane	mg/L		< 0.002	U
1,2- Dichloropropane	mg/L		< 0.001	U
cis-1,3-Dichloropropene	mg/L		< 0.001	U
trans-1,3-Dichloropropene	mg/L		< 0.001	U
Ethylbenzene	mg/L		< 0.001	U
Methylene Chloride	mg/L		< 0.001	U
1,1,2,2-Tetrachloroethane	mg/L		< 0.001	U
Tetra chloroethene	mg/L		< 0.001	U
Toluene	mg/L		0.00011	J
1,1,1- Trichloroethane	mg/L		< 0.001	U
1,1,2- Trichloroethane	mg/L		< 0.001	U
Trichloroethene	mg/L		< 0.001	U
Vinyl Chloride	mg/L		< 0.002	U
Total Toxic Organics	*mg/L*	*5.844*	*< 0.049*	
Metals				
Cadmium	mg/L	0.7	< 0.005	U
Chromium	mg/L	5	< 0.01	U
Copper	mg/L	2.7	0.0048	J
Iron	mg/L	150	0.047	J
Nickel	mg/L	2.3	< 0.04	U
Lead	mg/L	0.4	< 0.01	U
Zinc	mg/L	3	0.0142	J

Analyte	Units	Limit	Concentration	Qualifiers(1)
General Chemistry				
pH		5.5-11.5	6.9	
COD	mg/L	600	42	
TSS	mg/L	300	< 4	U
Radionuclides				
Gross Alpha	pCi/L	3,000	< 2.4	U
Gross Beta	pCi/L	50	< 0.98	U
Ra-226	pCi/L	10	0.72	
Ra-228	pCi/L	30	< 0.35	U
Th-228	pCi/L	2,000	< 0.22	U
Th-230	pCi/L	1,000	< 0.2	U
Th-232	pCi/L	300	< 0.16	U
U-234	pCi/L		< 0.14	U
U-235/6	pCi/L		< 0.13	U
U-238	pCi/L		< 0.12	U
Total Uranium	*pCi/L*	*3,000*	*< 0.39*	

10 CFR 20 Appendix B Table 3 Values

Analyte	Units	Limit	Discharge Concentration	Averaged Concentration
Ra-226	pCi/L	0.6	0.72	0.001
Ra-228	pCi/L	0.6	0.35	0.001
Th-228	pCi/L	2	0.22	0.000
Th-230	pCi/L	1	0.2	0.000
Th-232	pCi/L	0.3	0.16	0.000
U-234	pCi/L	3	0.14	0.000
U-235/6	pCi/L	3	0.13	0.000
U-238	pCi/L	3	0.12	0.000
Sum of Fractions	*pCi/L*	*1*	*n/a*	*0.007*

Discharge Volume (gals) = 40,000

Covidien averaging factor(2) = 0.002

Analyte	Units	Annual Limit	Discharge Activity	Year to Date Activity
Gross Radioactivity	Ci	1	5.1E-07	4.2E-06

Notes:

(1) 'J' indicates estimated value; 'U' indicates result less than sample detection limit; 'A' indicates value may be biased high based on QC results

(2) derived from discharge volume divided by a Covidien minimum average monthly volume (20,000,000 gal)

TestAmerica
THE LEADER IN ENVIRONMENTAL TESTING

TestAmerica Laboratories, Inc.

ANALYTICAL REPORT

Mallinckrodt St. Louis Plant

Lot #: F1C280473

Mark Tepperman

AECOM Technical Services Inc.
8005 Outer Circle Road
Brooks Air Force Bas, TX 78235

TESTAMERICA LABORATORIES, INC.

Jayna Awalt
Project Manager

April 4, 2011

Case Narrative
LOT NUMBER: **F1C280473**

This report contains the analytical results for the two samples received under chain of custody by TestAmerica St. Louis on March 28, 2011. These samples are associated with your Mallinckrodt St. Louis Plant project.

The analytical results included in this report meet all applicable quality control procedure requirements except as noted in the following case narrative.

The test results in this report meet all NELAP requirements for parameters in which accreditations are held by TestAmerica St. Louis. Any exceptions to NELAP requirements are noted in the case narrative. The case narrative is an integral part of this report.

All chemical analysis results are based upon sample as received, wet weight, unless noted otherwise. All radiochemistry results are based upon sample as dried and ground with the exception of tritium, unless requested wet weight by the client.

Observations/Nonconformances
Reference the chain of custody and condition upon receipt report for any variations on receipt conditions and temperature of samples on receipt.

Volatile Organics Method 624
Batch: 1087393

The CCV recoveries are outside the upper QC limit (greater than 20% D) for Chloromethane and Vinyl chloride, indicating a potential high bias for these analytes in the samples associated with this CCV. These analytes were not detected above the reporting limit in the associated samples therefore the sample data was not adversely affected by this excursion.
Affected Samples:
F1C280473 (2): TRIP BLANK

There was insufficient sample volume provided to perform MS/MSD analysis. An LCS/LCSD was performed to demonstrate accuracy and replicate precision.
Affected Samples:
F1C280473 (2): TRIP BLANK

Batch: 1090255

The LCS/LCSD RPD values for Acrolein and Bromomethane are outside the established QC limits. LCS/LCSD recoveries are within QC limits therefore the sample data was not adversely affected by this excursion.
Affected Samples:
F1C280473 (1): 60162412-SMP-PL5-WA-OTH-0368

The MSD recoveries for Acrolein and 1,1-Dichloroethene are outside the established QC limits. The RPD values 7 compounds are not within method acceptance criteria. Matrix interference is physically evident in the sample. The sample foamed excessively when purged. Method performance is demonstrated by acceptable LCS/LCSD recoveries.
Affected Samples:
F1C280473 (1): 60162412-SMP-PL5-WA-OTH-0368

The surrogate recovery for Toluene-d8 (118%) is outside the upper QC limit, indicating a potential positive bias. There are no target analytes associated with this surrogate detected above the reporting limit in the sample; therefore the sample data was not adversely affected by this excursion.
Affected Samples:
F1C280473 (1): 60162412-SMP-PL5-WA-OTH-0368

There are no other observations or non-conformances associated with the analyses contained in this report.

METHODS SUMMARY

F1C280473

PARAMETER	ANALYTICAL METHOD	PREPARATION METHOD
pH Aqueous	SW846 9040	SW846 9040
Chemical Oxygen Demand	MCAWW 410.4	MCAWW 410.4
Gross Alpha/Beta EPA 900	EPA 900.0 MOD	EPA 900.0
Isotopic Thorium by Alpha Spectroscopy	EML A-01-R MOD	
Isotopic Uranium by Alpha Spectroscopy	EML A-01-R MOD	
Non-Filterable Residue (TSS)	MCAWW 160.2	MCAWW 160.2
Purgeables	CFR136A 624	SW846 5030B
Radium-226 by GFPC	EPA 903.0 MOD	
Radium-228 by GFPC	EPA 904 MOD	
Trace Inductively Coupled Plasma (ICP) Metals	SW846 6010B	

References:

CFR136A "Methods for Organic Chemical Analysis of Municipal and Industrial Wastewater", 40CFR, Part 136, Appendix A, October 26, 1984 and subsequent revisions.

EML "ENVIRONMENTAL MEASUREMENTS LABORATORY PROCEDURES MANUAL" HASL-300 28TH EDITION, VOLUME I and II DEPARTMENT OF ENERGY

EPA "EASTERN ENVIRONMENTAL RADIATION FACILITY RADIOCHEMISTRY PROCEDURES MANUAL" US EPA EPA 520/5-84-006 AUGUST 1984

MCAWW "Methods for Chemical Analysis of Water and Wastes", EPA-600/4-79-020, March 1983 and subsequent revisions.

SW846 "Test Methods for Evaluating Solid Waste, Physical/Chemical Methods", Third Edition, November 1986 and its updates.

SAMPLE SUMMARY

F1C280473

WO #	SAMPLE#	CLIENT SAMPLE ID	SAMPLED DATE	SAMP TIME
MF9GH	001	60162412-SMP-PL5-WA-OTH-0368	03/28/11	11:15
MF9GT	002	TRIP BLANK	03/28/11	

NOTE(S):

- The analytical results of the samples listed above are presented on the following pages.
- All calculations are performed before rounding to avoid round-off errors in calculated results.
- Results noted as "ND" were not detected at or above the stated limit.
- This report must not be reproduced, except in full, without the written approval of the laboratory.
- Results for the following parameters are never reported on a dry weight basis: color, corrosivity, density, flashpoint, ignitability, layers, odor, paint filter test, pH, porosity pressure, reactivity, redox potential, specific gravity, spot tests, solids, solubility, temperature, viscosity, and weight.

AECOM Technical Services Inc.

Client Sample ID: 60162412-SMP-PL5-WA-OTH-0368

GC/MS Volatiles

Lot-Sample #...: F1C280473-001 **Work Order #...:** MF9GH1CE **Matrix.....:** WATER
Date Sampled...: 03/28/11 11:15 **Date Received..:** 03/28/11
Prep Date.....: 03/30/11 **Analysis Date..:** 03/31/11
Prep Batch #...: 1090255 **Analysis Time..:** 07:57
Dilution Factor: 1

Method.....: CFR136A 624

PARAMETER	RESULT	REPORTING LIMIT	UNITS
Acrolein	ND	10	ug/L
Acrylonitrile	ND	10	ug/L
Benzene	ND	1.0	ug/L
Bromoform	ND	1.0	ug/L
Bromomethane	ND	2.0	ug/L
Carbon tetrachloride	ND	1.0	ug/L
Chlorobenzene	ND	1.0	ug/L
Chlorodibromomethane	ND	1.0	ug/L
Chloroethane	ND	2.0	ug/L
Chloroform	**0.40 J**	**1.0**	**ug/L**
Chloromethane	ND	2.0	ug/L
Dichlorobromomethane	**0.16 J**	**1.0**	**ug/L**
1,1-Dichloroethane	ND	1.0	ug/L
1,2-Dichloroethane	ND	1.0	ug/L
1,1-Dichloroethene	ND	1.0	ug/L
1,2-Dichloroethene (total)	ND	2.0	ug/L
1,2-Dichloropropane	ND	1.0	ug/L
cis-1,3-Dichloropropene	ND	1.0	ug/L
trans-1,3-Dichloropropene	ND	1.0	ug/L
Ethylbenzene	ND	1.0	ug/L
Methylene chloride	ND	1.0	ug/L
1,1,2,2-Tetrachloroethane	ND	1.0	ug/L
Tetrachloroethene	ND	1.0	ug/L
Toluene	**0.11 J**	**1.0**	**ug/L**
1,1,1-Trichloroethane	ND	1.0	ug/L
1,1,2-Trichloroethane	ND	1.0	ug/L
Trichloroethene	ND	1.0	ug/L
Vinyl chloride	ND	2.0	ug/L

SURROGATE	PERCENT RECOVERY	RECOVERY LIMITS
1,2-Dichloroethane-d4	83	(62 - 122)
Toluene-d8	118 *	(73 - 116)
4-Bromofluorobenzene	110	(68 - 118)

NOTE(S):

* Surrogate recovery is outside stated control limits.

J Estimated result. Result is less than RL.

AECOM Technical Services Inc.

Client Sample ID: TRIP BLANK

GC/MS Volatiles

Lot-Sample #...: F1C280473-002 Work Order #...: MF9GT1AA Matrix.....: WATER
Date Sampled...: 03/28/11 Date Received..: 03/28/11
Prep Date.....: 03/28/11 Analysis Date..: 03/28/11
Prep Batch #...: 1087393 Analysis Time..: 23:51
Dilution Factor: 1

Method.....: CFR136A 624

PARAMETER	RESULT	REPORTING LIMIT	UNITS
Acrolein	ND	10	ug/L
Acrylonitrile	ND	10	ug/L
Benzene	ND	1.0	ug/L
Bromoform	ND	1.0	ug/L
Bromomethane	ND	2.0	ug/L
Carbon tetrachloride	ND	1.0	ug/L
Chlorobenzene	ND	1.0	ug/L
Chlorodibromomethane	ND	1.0	ug/L
Chloroethane	ND	2.0	ug/L
Chloroform	ND	1.0	ug/L
Chloromethane	ND	2.0	ug/L
Dichlorobromomethane	ND	1.0	ug/L
1,1-Dichloroethane	ND	1.0	ug/L
1,2-Dichloroethane	ND	1.0	ug/L
1,1-Dichloroethene	ND	1.0	ug/L
1,2-Dichloroethene (total)	ND	2.0	ug/L
1,2-Dichloropropane	ND	1.0	ug/L
cis-1,3-Dichloropropene	ND	1.0	ug/L
trans-1,3-Dichloropropene	ND	1.0	ug/L
Ethylbenzene	ND	1.0	ug/L
Methylene chloride	**0.48 J**	**1.0**	**ug/L**
1,1,2,2-Tetrachloroethane	ND	1.0	ug/L
Tetrachloroethene	ND	1.0	ug/L
Toluene	ND	1.0	ug/L
1,1,1-Trichloroethane	ND	1.0	ug/L
1,1,2-Trichloroethane	ND	1.0	ug/L
Trichloroethene	ND	1.0	ug/L
Vinyl chloride	ND	2.0	ug/L

SURROGATE	PERCENT RECOVERY	RECOVERY LIMITS
1,2-Dichloroethane-d4	84	(62 - 122)
Toluene-d8	102	(73 - 116)
4-Bromofluorobenzene	95	(68 - 118)

NOTE(S):

J Estimated result. Result is less than RL.

METHOD BLANK REPORT

GC/MS Volatiles

Client Lot #...: F1C280473
MB Lot-Sample #: F1C280000-393
Work Order #...: MGA6A1AA
Matrix.....: WATER
Prep Date.....: 03/28/11
Analysis Time..: 23:20
Analysis Date..: 03/28/11
Prep Batch #...: 1087393
Dilution Factor: 1

PARAMETER	RESULT	REPORTING LIMIT	UNITS	METHOD
Acrolein	ND	10	ug/L	CFR136A 624
Acrylonitrile	ND	10	ug/L	CFR136A 624
Benzene	ND	1.0	ug/L	CFR136A 624
Bromoform	ND	1.0	ug/L	CFR136A 624
Bromomethane	ND	2.0	ug/L	CFR136A 624
Carbon tetrachloride	ND	1.0	ug/L	CFR136A 624
Chlorobenzene	ND	1.0	ug/L	CFR136A 624
Chlorodibromomethane	ND	1.0	ug/L	CFR136A 624
Chloroethane	ND	2.0	ug/L	CFR136A 624
Chloroform	ND	1.0	ug/L	CFR136A 624
Chloromethane	ND	2.0	ug/L	CFR136A 624
Dichlorobromomethane	ND	1.0	ug/L	CFR136A 624
1,1-Dichloroethane	ND	1.0	ug/L	CFR136A 624
1,2-Dichloroethane	ND	1.0	ug/L	CFR136A 624
1,1-Dichloroethene	ND	1.0	ug/L	CFR136A 624
1,2-Dichloroethene (total)	ND	2.0	ug/L	CFR136A 624
1,2-Dichloropropane	ND	1.0	ug/L	CFR136A 624
cis-1,3-Dichloropropene	ND	1.0	ug/L	CFR136A 624
trans-1,3-Dichloropropene	ND	1.0	ug/L	CFR136A 624
Ethylbenzene	ND	1.0	ug/L	CFR136A 624
Methylene chloride	ND	1.0	ug/L	CFR136A 624
1,1,2,2-Tetrachloroethane	ND	1.0	ug/L	CFR136A 624
Tetrachloroethene	ND	1.0	ug/L	CFR136A 624
Toluene	ND	1.0	ug/L	CFR136A 624
1,1,1-Trichloroethane	ND	1.0	ug/L	CFR136A 624
1,1,2-Trichloroethane	ND	1.0	ug/L	CFR136A 624
Trichloroethene	ND	1.0	ug/L	CFR136A 624
Vinyl chloride	ND	2.0	ug/L	CFR136A 624

SURROGATE	PERCENT RECOVERY	RECOVERY LIMITS
1,2-Dichloroethane-d4	82	(62 - 122)
Toluene-d8	98	(73 - 116)
4-Bromofluorobenzene	98	(68 - 118)

NOTE(S):

Calculations are performed before rounding to avoid round-off errors in calculated results.

METHOD BLANK REPORT

GC/MS Volatiles

Client Lot #...: F1C280473
MB Lot-Sample #: F1C310000-255
Work Order #...: MGF531AA
Matrix.....: WATER
Prep Date.....: 03/30/11
Analysis Time..: 07:31
Analysis Date..: 03/31/11
Prep Batch #...: 1090255
Dilution Factor: 1

PARAMETER	RESULT	REPORTING LIMIT	UNITS	METHOD
Acrolein	ND	10	ug/L	CFR136A 624
Acrylonitrile	ND	10	ug/L	CFR136A 624
Benzene	ND	1.0	ug/L	CFR136A 624
Bromoform	ND	1.0	ug/L	CFR136A 624
Bromomethane	ND	2.0	ug/L	CFR136A 624
Carbon tetrachloride	ND	1.0	ug/L	CFR136A 624
Chlorobenzene	ND	1.0	ug/L	CFR136A 624
Chlorodibromomethane	ND	1.0	ug/L	CFR136A 624
Chloroethane	ND	2.0	ug/L	CFR136A 624
Chloroform	ND	1.0	ug/L	CFR136A 624
Chloromethane	ND	2.0	ug/L	CFR136A 624
Dichlorobromomethane	ND	1.0	ug/L	CFR136A 624
1,1-Dichloroethane	ND	1.0	ug/L	CFR136A 624
1,2-Dichloroethane	ND	1.0	ug/L	CFR136A 624
1,1-Dichloroethene	ND	1.0	ug/L	CFR136A 624
1,2-Dichloroethene (total)	ND	2.0	ug/L	CFR136A 624
1,2-Dichloropropane	ND	1.0	ug/L	CFR136A 624
cis-1,3-Dichloropropene	ND	1.0	ug/L	CFR136A 624
trans-1,3-Dichloropropene	ND	1.0	ug/L	CFR136A 624
Ethylbenzene	ND	1.0	ug/L	CFR136A 624
Methylene chloride	ND	1.0	ug/L	CFR136A 624
1,1,2,2-Tetrachloroethane	ND	1.0	ug/L	CFR136A 624
Tetrachloroethene	ND	1.0	ug/L	CFR136A 624
Toluene	ND	1.0	ug/L	CFR136A 624
1,1,1-Trichloroethane	ND	1.0	ug/L	CFR136A 624
1,1,2-Trichloroethane	ND	1.0	ug/L	CFR136A 624
Trichloroethene	ND	1.0	ug/L	CFR136A 624
Vinyl chloride	ND	2.0	ug/L	CFR136A 624

SURROGATE	PERCENT RECOVERY	RECOVERY LIMITS
1,2-Dichloroethane-d4	82	(62 - 122)
Toluene-d8	113	(73 - 116)
4-Bromofluorobenzene	114	(68 - 118)

NOTE(S):

Calculations are performed before rounding to avoid round-off errors in calculated results.

LABORATORY CONTROL SAMPLE EVALUATION REPORT

GC/MS Volatiles

Client Lot #...: F1C280473 Work Order #...: MGA6A1AC-LCS Matrix.....: WATER
LCS Lot-Sample#: F1C280000-393 MGA6A1AD-LCSD
Prep Date.....: 03/28/11 Analysis Date..: 03/28/11
Prep Batch #...: 1087393 Analysis Time..: 21:49
Dilution Factor: 1

PARAMETER	PERCENT RECOVERY	RECOVERY LIMITS	RPD	RPD LIMITS	METHOD
Acrolein	95	(40 - 140)			CFR136A 624
	110	(40 - 140)	15	(0-20)	CFR136A 624
Acrylonitrile	98	(67 - 140)			CFR136A 624
	113	(67 - 140)	15	(0-20)	CFR136A 624
Benzene	108	(76 - 119)			CFR136A 624
	109	(76 - 119)	0.82	(0-20)	CFR136A 624
Bromoform	96	(71 - 139)			CFR136A 624
	97	(71 - 139)	1.4	(0-20)	CFR136A 624
Bromomethane	97	(67 - 140)			CFR136A 624
	99	(67 - 140)	2.2	(0-20)	CFR136A 624
Carbon tetrachloride	100	(73 - 140)			CFR136A 624
	98	(73 - 140)	2.0	(0-20)	CFR136A 624
Chlorobenzene	104	(80 - 115)			CFR136A 624
	103	(80 - 115)	0.87	(0-20)	CFR136A 624
Chlorodibromomethane	105	(74 - 140)			CFR136A 624
	107	(74 - 140)	1.7	(0-20)	CFR136A 624
Chloroethane	104	(36 - 140)			CFR136A 624
	104	(36 - 140)	0.67	(0-20)	CFR136A 624
Chloroform	107	(77 - 121)			CFR136A 624
	108	(77 - 121)	1.4	(0-20)	CFR136A 624
Chloromethane	108	(41 - 140)			CFR136A 624
	108	(41 - 140)	0.27	(0-20)	CFR136A 624
Dichlorobromomethane	99	(72 - 138)			CFR136A 624
	101	(72 - 138)	1.3	(0-20)	CFR136A 624
1,1-Dichloroethane	109	(71 - 124)			CFR136A 624
	108	(71 - 124)	0.73	(0-20)	CFR136A 624
1,2-Dichloroethane	107	(67 - 133)			CFR136A 624
	106	(67 - 133)	1.0	(0-20)	CFR136A 624
1,1-Dichloroethene	113	(77 - 120)			CFR136A 624
	112	(77 - 120)	1.1	(0-20)	CFR136A 624
1,2-Dichloroethene (total)	112	(78 - 123)			CFR136A 624
	113	(78 - 123)	0.57	(0-20)	CFR136A 624
1,2-Dichloropropane	106	(67 - 137)			CFR136A 624
	109	(67 - 137)	2.7	(0-20)	CFR136A 624
cis-1,3-Dichloropropene	98	(58 - 140)			CFR136A 624
	106	(58 - 140)	8.3	(0-20)	CFR136A 624
trans-1,3-Dichloropropene	98	(61 - 140)			CFR136A 624
	99	(61 - 140)	1.3	(0-20)	CFR136A 624

(Continued on next page)

LABORATORY CONTROL SAMPLE EVALUATION REPORT

GC/MS Volatiles

Client Lot #...: F1C280473 Work Order #...: MGA6A1AC-LCS Matrix.....: WATER
LCS Lot-Sample#: F1C280000-393 MGA6A1AD-LCSD

PARAMETER	PERCENT RECOVERY	RECOVERY LIMITS	RPD	RPD LIMITS	METHOD
Ethylbenzene	**106**	**(77 - 123)**			**CFR136A 624**
	106	**(77 - 123)**	**0.18**	**(0-20)**	**CFR136A 624**
Methylene chloride	**105**	**(62 - 127)**			**CFR136A 624**
	107	**(62 - 127)**	**2.0**	**(0-20)**	**CFR136A 624**
1,1,2,2-Tetrachloroethane	**100**	**(61 - 128)**			**CFR136A 624**
	100	**(61 - 128)**	**0.20**	**(0-20)**	**CFR136A 624**
Tetrachloroethene	**86**	**(67 - 140)**			**CFR136A 624**
	85	**(67 - 140)**	**0.57**	**(0-20)**	**CFR136A 624**
Toluene	**112**	**(75 - 120)**			**CFR136A 624**
	110	**(75 - 120)**	**1.8**	**(0-20)**	**CFR136A 624**
1,1,1-Trichloroethane	**110**	**(81 - 125)**			**CFR136A 624**
	112	**(81 - 125)**	**1.7**	**(0-20)**	**CFR136A 624**
1,1,2-Trichloroethane	**108**	**(73 - 126)**			**CFR136A 624**
	112	**(73 - 126)**	**3.7**	**(0-20)**	**CFR136A 624**
Trichloroethene	**96**	**(76 - 126)**			**CFR136A 624**
	97	**(76 - 126)**	**1.1**	**(0-20)**	**CFR136A 624**
Vinyl chloride	**100**	**(58 - 129)**			**CFR136A 624**
	98	**(58 - 129)**	**2.0**	**(0-20)**	**CFR136A 624**

SURROGATE	PERCENT RECOVERY	RECOVERY LIMITS
1,2-Dichloroethane-d4	83	(62 - 126)
	83	(62 - 126)
Toluene-d8	93	(78 - 119)
	91	(78 - 119)
4-Bromofluorobenzene	90	(73 - 115)
	92	(73 - 115)

NOTE(S):

Calculations are performed before rounding to avoid round-off errors in calculated results.

Bold print denotes control parameters

LABORATORY CONTROL SAMPLE EVALUATION REPORT

GC/MS Volatiles

Client Lot #...: F1C280473 Work Order #...: MGF531AC-LCS Matrix.....: WATER
LCS Lot-Sample#: F1C310000-255 MGF531AD-LCSD
Prep Date.....: 03/30/11 Analysis Date..: 03/31/11
Prep Batch #...: 1090255 Analysis Time..: 00:44
Dilution Factor: 1

PARAMETER	PERCENT RECOVERY	RECOVERY LIMITS	RPD	RPD LIMITS	METHOD
Acrolein	78	(40 - 140)			CFR136A 624
	101 p	(40 - 140)	26	(0-20)	CFR136A 624
Acrylonitrile	84	(67 - 140)			CFR136A 624
	92	(67 - 140)	8.9	(0-20)	CFR136A 624
Benzene	91	(76 - 119)			CFR136A 624
	96	(76 - 119)	4.6	(0-20)	CFR136A 624
Bromoform	89	(71 - 139)			CFR136A 624
	100	(71 - 139)	11	(0-20)	CFR136A 624
Bromomethane	98	(67 - 140)			CFR136A 624
	80 p	(67 - 140)	21	(0-20)	CFR136A 624
Carbon tetrachloride	104	(73 - 140)			CFR136A 624
	108	(73 - 140)	3.7	(0-20)	CFR136A 624
Chlorobenzene	92	(80 - 115)			CFR136A 624
	97	(80 - 115)	5.3	(0-20)	CFR136A 624
Chlorodibromomethane	93	(74 - 140)			CFR136A 624
	95	(74 - 140)	1.6	(0-20)	CFR136A 624
Chloroethane	83	(36 - 140)			CFR136A 624
	77	(36 - 140)	7.2	(0-20)	CFR136A 624
Chloroform	91	(77 - 121)			CFR136A 624
	96	(77 - 121)	5.5	(0-20)	CFR136A 624
Chloromethane	92	(41 - 140)			CFR136A 624
	94	(41 - 140)	2.1	(0-20)	CFR136A 624
Dichlorobromomethane	91	(72 - 138)			CFR136A 624
	96	(72 - 138)	4.8	(0-20)	CFR136A 624
1,1-Dichloroethane	90	(71 - 124)			CFR136A 624
	94	(71 - 124)	4.7	(0-20)	CFR136A 624
1,2-Dichloroethane	90	(67 - 133)			CFR136A 624
	92	(67 - 133)	2.4	(0-20)	CFR136A 624
1,1-Dichloroethene	96	(77 - 120)			CFR136A 624
	99	(77 - 120)	3.5	(0-20)	CFR136A 624
1,2-Dichloroethene (total)	93	(78 - 123)			CFR136A 624
	99	(78 - 123)	6.7	(0-20)	CFR136A 624
1,2-Dichloropropane	86	(67 - 137)			CFR136A 624
	93	(67 - 137)	7.1	(0-20)	CFR136A 624
cis-1,3-Dichloropropene	94	(58 - 140)			CFR136A 624
	97	(58 - 140)	3.6	(0-20)	CFR136A 624
trans-1,3-Dichloropropene	96	(61 - 140)			CFR136A 624
	94	(61 - 140)	2.4	(0-20)	CFR136A 624

(Continued on next page)

LABORATORY CONTROL SAMPLE EVALUATION REPORT

GC/MS Volatiles

Client Lot #...: F1C280473 Work Order #...: MGF531AC-LCS Matrix.....: WATER
LCS Lot-Sample#: F1C310000-255 MGF531AD-LCSD

PARAMETER	PERCENT RECOVERY	RECOVERY LIMITS	RPD	RPD LIMITS	METHOD
Ethylbenzene	105	(77 - 123)			CFR136A 624
	110	(77 - 123)	5.2	(0-20)	CFR136A 624
Methylene chloride	82	(62 - 127)			CFR136A 624
	85	(62 - 127)	3.4	(0-20)	CFR136A 624
1,1,2,2-Tetrachloroethane	76	(61 - 128)			CFR136A 624
	77	(61 - 128)	1.0	(0-20)	CFR136A 624
Tetrachloroethene	91	(67 - 140)			CFR136A 624
	96	(67 - 140)	5.0	(0-20)	CFR136A 624
Toluene	102	(75 - 120)			CFR136A 624
	102	(75 - 120)	0.39	(0-20)	CFR136A 624
1,1,1-Trichloroethane	95	(81 - 125)			CFR136A 624
	100	(81 - 125)	5.4	(0-20)	CFR136A 624
1,1,2-Trichloroethane	84	(73 - 126)			CFR136A 624
	86	(73 - 126)	1.8	(0-20)	CFR136A 624
Trichloroethene	98	(76 - 126)			CFR136A 624
	105	(76 - 126)	6.9	(0-20)	CFR136A 624
Vinyl chloride	92	(58 - 129)			CFR136A 624
	81	(58 - 129)	13	(0-20)	CFR136A 624

SURROGATE	PERCENT RECOVERY	RECOVERY LIMITS
1,2-Dichloroethane-d4	85	(62 - 126)
	88	(62 - 126)
Toluene-d8	108	(78 - 119)
	109	(78 - 119)
4-Bromofluorobenzene	105	(73 - 115)
	105	(73 - 115)

NOTE(S):

Calculations are performed before rounding to avoid round-off errors in calculated results.

Bold print denotes control parameters

p Relative percent difference (RPD) is outside stated control limits.

MATRIX SPIKE SAMPLE EVALUATION REPORT

GC/MS Volatiles

Client Lot #...: F1C280473 Work Order #...: MF6251E9-MS Matrix.....: WATER
MS Lot-Sample #: F1C250463-001 MF6251FA-MSD
Date Sampled...: 03/23/11 14:00 Date Received..: 03/25/11
Prep Date.....: 03/30/11 Analysis Date..: 03/31/11
Prep Batch #...: 1090256 Analysis Time..: 09:16
Dilution Factor: 1

PARAMETER	PERCENT RECOVERY	RECOVERY LIMITS	RPD	RPD LIMITS	METHOD
Acrolein	67	(50 - 150)			CFR136A 624
	165 a,p	(50 - 150)	84	(0-20)	CFR136A 624
Acrylonitrile	79	(50 - 150)			CFR136A 624
	149 p	(50 - 150)	61	(0-20)	CFR136A 624
Benzene	108	(47 - 150)			CFR136A 624
	111	(47 - 150)	2.6	(0-20)	CFR136A 624
Bromoform	94	(45 - 150)			CFR136A 624
	98	(45 - 150)	4.1	(0-20)	CFR136A 624
Bromomethane	71	(41 - 150)			CFR136A 624
	82	(41 - 150)	15	(0-20)	CFR136A 624
Carbon tetrachloride	121	(70 - 140)			CFR136A 624
	120	(70 - 140)	0.74	(0-20)	CFR136A 624
Chlorobenzene	103	(54 - 145)			CFR136A 624
	105	(54 - 145)	1.9	(0-20)	CFR136A 624
Dibromochloromethane	103	(64 - 148)			CFR136A 624
	108	(64 - 148)	4.5	(0-20)	CFR136A 624
Chloroethane	91	(28 - 150)			CFR136A 624
	103	(28 - 150)	12	(0-20)	CFR136A 624
Chloroform	110	(51 - 138)			CFR136A 624
	112	(51 - 138)	2.1	(0-20)	CFR136A 624
Chloromethane	91	(33 - 150)			CFR136A 624
	128 p	(33 - 150)	34	(0-20)	CFR136A 624
Bromodichloromethane	111	(47 - 150)			CFR136A 624
	117	(47 - 150)	5.5	(0-20)	CFR136A 624
1,1-Dichloroethane	112	(59 - 150)			CFR136A 624
	147 p	(59 - 150)	27	(0-20)	CFR136A 624
1,2-Dichloroethane	109	(59 - 143)			CFR136A 624
	119	(59 - 143)	9.3	(0-20)	CFR136A 624
1,1-Dichloroethene	147	(48 - 150)			CFR136A 624
	160 a	(48 - 150)	8.4	(0-20)	CFR136A 624
1,2-Dichloroethene (total)	106	(56 - 150)			CFR136A 624
	132 p	(56 - 150)	22	(0-20)	CFR136A 624
1,2-Dichloropropane	102	(56 - 150)			CFR136A 624
	106	(56 - 150)	3.6	(0-20)	CFR136A 624
cis-1,3-Dichloropropene	85	(50 - 150)			CFR136A 624
	91	(50 - 150)	7.1	(0-20)	CFR136A 624
trans-1,3-Dichloropropene	86	(31 - 150)			CFR136A 624
	95	(31 - 150)	9.7	(0-20)	CFR136A 624

(Continued on next page)

MATRIX SPIKE SAMPLE EVALUATION REPORT

GC/MS Volatiles

Client Lot #...: F1C280473 Work Order #...: MF6251E9-MS Matrix.....: WATER
MS Lot-Sample #: F1C250463-001 MF6251FA-MSD

PARAMETER	PERCENT RECOVERY	RECOVERY LIMITS	RPD	RPD LIMITS	METHOD
Ethylbenzene	115	(53 - 150)			CFR136A 624
	116	(53 - 150)	0.86	(0-20)	CFR136A 624
Methylene chloride	92	(38 - 150)			CFR136A 624
	130 p	(38 - 150)	34	(0-20)	CFR136A 624
1,1,2,2-Tetrachloroethane	89	(46 - 150)			CFR136A 624
	88	(46 - 150)	1.6	(0-20)	CFR136A 624
Tetrachloroethene	94	(65 - 148)			CFR136A 624
	92	(65 - 148)	1.6	(0-20)	CFR136A 624
Toluene	112	(52 - 150)			CFR136A 624
	114	(52 - 150)	1.4	(0-20)	CFR136A 624
1,1,1-Trichloroethane	115	(54 - 150)			CFR136A 624
	116	(54 - 150)	0.51	(0-20)	CFR136A 624
1,1,2-Trichloroethane	98	(61 - 137)			CFR136A 624
	104	(61 - 137)	6.7	(0-20)	CFR136A 624
Trichloroethene	106	(71 - 150)			CFR136A 624
	105	(71 - 150)	1.6	(0-20)	CFR136A 624
Vinyl chloride	91	(33 - 150)			CFR136A 624
	120 p	(33 - 150)	27	(0-20)	CFR136A 624

SURROGATE	PERCENT RECOVERY	RECOVERY LIMITS
1,2-Dichloroethane-d4	96	(62 - 122)
	98	(62 - 122)
Toluene-d8	99	(73 - 116)
	102	(73 - 116)
4-Bromofluorobenzene	93	(68 - 118)
	92	(68 - 118)

NOTE(S):

Calculations are performed before rounding to avoid round-off errors in calculated results.

Bold print denotes control parameters

a Spiked analyte recovery is outside stated control limits.

p Relative percent difference (RPD) is outside stated control limits.

AECOM Technical Services Inc.

Client Sample ID: 60162412-SMP-PL5-WA-OTH-0368

TOTAL Metals

Lot-Sample #...: F1C280473-001 Matrix.....: WATER
Date Sampled...: 03/28/11 11:15 Date Received..: 03/28/11

PARAMETER	RESULT	REPORTING LIMIT	UNITS	METHOD	PREPARATION-ANALYSIS DATE	WORK ORDER #
Prep Batch #...: 1087309						
Cadmium	ND	5	ug/L	SW846 6010B	03/28-03/30/11	MF9GH1AC
		Dilution Factor: 1		Analysis Time..: 11:47		
Chromium	ND	10	ug/L	SW846 6010B	03/28-03/30/11	MF9GH1AD
		Dilution Factor: 1		Analysis Time..: 11:47		
Copper	4.8 B	25	ug/L	SW846 6010B	03/28-03/30/11	MF9GH1AE
		Dilution Factor: 1		Analysis Time..: 11:47		
Iron	47.0 B	100	ug/L	SW846 6010B	03/28-03/30/11	MF9GH1AF
		Dilution Factor: 1		Analysis Time..: 11:47		
Nickel	ND	40	ug/L	SW846 6010B	03/28-03/30/11	MF9GH1AG
		Dilution Factor: 1		Analysis Time..: 11:47		
Lead	ND	10	ug/L	SW846 6010B	03/28-03/30/11	MF9GH1AH
		Dilution Factor: 1		Analysis Time..: 11:47		
Zinc	14.2 B	20	ug/L	SW846 6010B	03/28-03/30/11	MF9GH1AJ
		Dilution Factor: 1		Analysis Time..: 11:47		

NOTE(S):

B Estimated result. Result is less than RL.

METHOD BLANK REPORT

TOTAL Metals

Client Lot #...: F1C280473 Matrix.....: WATER

PARAMETER	RESULT	REPORTING LIMIT	UNITS	METHOD	PREPARATION-ANALYSIS DATE	WORK ORDER #
MB Lot-Sample #: F1C280000-309 Prep Batch #...: 1087309						
Cadmium	ND	5	ug/L	SW846 6010B	03/28-03/30/11	MF9GW1AA
		Dilution Factor: 1				
		Analysis Time..: 11:32				
Chromium	ND	10	ug/L	SW846 6010B	03/28-03/30/11	MF9GW1AC
		Dilution Factor: 1				
		Analysis Time..: 11:32				
Copper	ND	25	ug/L	SW846 6010B	03/28-03/30/11	MF9GW1AD
		Dilution Factor: 1				
		Analysis Time..: 11:32				
Iron	ND	100	ug/L	SW846 6010B	03/28-03/30/11	MF9GW1AE
		Dilution Factor: 1				
		Analysis Time..: 11:32				
Lead	ND	10	ug/L	SW846 6010B	03/28-03/30/11	MF9GW1AG
		Dilution Factor: 1				
		Analysis Time..: 11:32				
Nickel	ND	40	ug/L	SW846 6010B	03/28-03/30/11	MF9GW1AF
		Dilution Factor: 1				
		Analysis Time..: 11:32				
Zinc	ND	20	ug/L	SW846 6010B	03/28-03/30/11	MF9GW1AH
		Dilution Factor: 1				
		Analysis Time..: 11:32				

NOTE(S):

Calculations are performed before rounding to avoid round-off errors in calculated results.

LABORATORY CONTROL SAMPLE EVALUATION REPORT

TOTAL Metals

Client Lot #...: F1C280473 **Matrix.....:** WATER

PARAMETER	PERCENT RECOVERY	RECOVERY LIMITS	METHOD	PREPARATION-ANALYSIS DATE	WORK ORDER #
LCS Lot-Sample#: F1C280000-309 **Prep Batch #...:** 1087309					
Cadmium	105	(80 - 120)	SW846 6010B	03/28-03/30/11	MF9GW1AJ
		Dilution Factor: 1	Analysis Time..: 11:39		
Chromium	102	(80 - 120)	SW846 6010B	03/28-03/30/11	MF9GW1AK
		Dilution Factor: 1	Analysis Time..: 11:39		
Copper	103	(80 - 120)	SW846 6010B	03/28-03/30/11	MF9GW1AL
		Dilution Factor: 1	Analysis Time..: 11:39		
Iron	108	(80 - 120)	SW846 6010B	03/28-03/30/11	MF9GW1AM
		Dilution Factor: 1	Analysis Time..: 11:39		
Nickel	102	(80 - 120)	SW846 6010B	03/28-03/30/11	MF9GW1AN
		Dilution Factor: 1	Analysis Time..: 11:39		
Lead	102	(80 - 120)	SW846 6010B	03/28-03/30/11	MF9GW1AP
		Dilution Factor: 1	Analysis Time..: 11:39		
Zinc	111	(80 - 120)	SW846 6010B	03/28-03/30/11	MF9GW1AQ
		Dilution Factor: 1	Analysis Time..: 11:39		

NOTE(S):

Calculations are performed before rounding to avoid round-off errors in calculated results.

MATRIX SPIKE SAMPLE EVALUATION REPORT

TOTAL Metals

Client Lot #...: F1C280473 **Matrix.....:** WATER
Date Sampled...: 03/28/11 11:15 **Date Received..:** 03/28/11

PARAMETER	PERCENT RECOVERY	RECOVERY LIMITS	RPD	RPD LIMITS	METHOD	PREPARATION-ANALYSIS DATE	WORK ORDER #
MS Lot-Sample #: F1C280473-001 Prep Batch #...: 1087309							
Cadmium	101	(75 - 125)			SW846 6010B	03/28-03/30/11	MF9GH1AV
	102	(75 - 125)	0.91	(0-20)	SW846 6010B	03/28-03/30/11	MF9GH1AW
		Dilution Factor: 1					
		Analysis Time..: 12:01					
Chromium	98	(75 - 125)			SW846 6010B	03/28-03/30/11	MF9GH1AX
	98	(75 - 125)	0.13	(0-20)	SW846 6010B	03/28-03/30/11	MF9GH1A0
		Dilution Factor: 1					
		Analysis Time..: 12:01					
Copper	99	(75 - 125)			SW846 6010B	03/28-03/30/11	MF9GH1A1
	98	(75 - 125)	0.81	(0-20)	SW846 6010B	03/28-03/30/11	MF9GH1A2
		Dilution Factor: 1					
		Analysis Time..: 12:01					
Iron	102	(75 - 125)			SW846 6010B	03/28-03/30/11	MF9GH1A3
	102	(75 - 125)	0.35	(0-20)	SW846 6010B	03/28-03/30/11	MF9GH1A4
		Dilution Factor: 1					
		Analysis Time..: 12:01					
Lead	97	(75 - 125)			SW846 6010B	03/28-03/30/11	MF9GH1A7
	97	(75 - 125)	0.16	(0-20)	SW846 6010B	03/28-03/30/11	MF9GH1A8
		Dilution Factor: 1					
		Analysis Time..: 12:01					
Nickel	97	(75 - 125)			SW846 6010B	03/28-03/30/11	MF9GH1A5
	98	(75 - 125)	0.85	(0-20)	SW846 6010B	03/28-03/30/11	MF9GH1A6
		Dilution Factor: 1					
		Analysis Time..: 12:01					
Zinc	109	(75 - 125)			SW846 6010B	03/28-03/30/11	MF9GH1A9
	110	(75 - 125)	0.46	(0-20)	SW846 6010B	03/28-03/30/11	MF9GH1CA
		Dilution Factor: 1					
		Analysis Time..: 12:01					

NOTE(S):

Calculations are performed before rounding to avoid round-off errors in calculated results.

AECOM Technical Services Inc.

Client Sample ID: 60162412-SMP-PL5-WA-OTH-0368

General Chemistry

Lot-Sample #...: F1C280473-001 Work Order #...: MF9GH Matrix.....: WATER
Date Sampled...: 03/28/11 11:15 Date Received..: 03/28/11

PARAMETER	RESULT	RL	UNITS	METHOD	PREPARATION-ANALYSIS DATE	PREP BATCH #
pH (liquid)	6.9	0.10	No Units	SW846 9040	03/29/11	1088338
		Dilution Factor: 1		Analysis Time..: 16:40		
COD	42.0	20.0	mg/L	MCAWW 410.4	03/30-03/31/11	1090116
		Dilution Factor: 1		Analysis Time..: 00:00		
Total Suspended Solids	ND	4.0	mg/L	MCAWW 160.2	03/30-03/31/11	1089339
		Dilution Factor: 1		Analysis Time..: 00:00		

METHOD BLANK REPORT

General Chemistry

Client Lot #...: F1C280473 **Matrix.....:** WATER

PARAMETER	RESULT	REPORTING LIMIT	UNITS	METHOD	PREPARATION-ANALYSIS DATE	PREP BATCH #
COD		Work Order #: MGEGC1AA		MB Lot-Sample #:	F1C310000-116	
	ND	20.0	mg/L	MCAWW 410.4	03/30-03/31/11	1090116
		Dilution Factor: 1				
		Analysis Time..: 00:00				
Total Suspended Solids		Work Order #: MGDPK1AA		MB Lot-Sample #:	F1C300000-339	
	ND	4.0	mg/L	MCAWW 160.2	03/30-03/31/11	1089339
		Dilution Factor: 1				
		Analysis Time..: 00:00				

NOTE(S):

Calculations are performed before rounding to avoid round-off errors in calculated results.

LABORATORY CONTROL SAMPLE EVALUATION REPORT

General Chemistry

Client Lot #...: F1C280473 Matrix.....: WATER

PARAMETER	PERCENT RECOVERY	RECOVERY LIMITS	METHOD	PREPARATION-ANALYSIS DATE	PREP BATCH #
pH (liquid)		Work Order #: MGDKA1AA	LCS Lot-Sample#: F1C290000-338		
	100	(99 - 101)	SW846 9040	03/29/11	1088338
		Dilution Factor: 1	Analysis Time..: 16:39		
COD		Work Order #: MGEGC1AC	LCS Lot-Sample#: F1C310000-116		
	101	(90 - 110)	MCAWW 410.4	03/30-03/31/11	1090116
		Dilution Factor: 1	Analysis Time..: 00:00		
Total Suspended Solids		Work Order #: MGDPK1AC	LCS Lot-Sample#: F1C300000-339		
	108	(79 - 122)	MCAWW 160.2	03/30-03/31/11	1089339
		Dilution Factor: 1	Analysis Time..: 00:00		

NOTE(S):

Calculations are performed before rounding to avoid round-off errors in calculated results.

MATRIX SPIKE SAMPLE EVALUATION REPORT

General Chemistry

Client Lot #...: F1C280473 **Matrix.....:** WATER
Date Sampled...: 03/28/11 11:15 **Date Received..:** 03/28/11

PARAMETER	PERCENT RECOVERY	RECOVERY LIMITS	METHOD	PREPARATION-ANALYSIS DATE	PREP BATCH #
COD		Work Order #...: MF9GH1CH		MS Lot-Sample #: F1C280473-001	
	90	(90 - 110)	MCAWW 410.4	03/30-03/31/11	1090116

Dilution Factor: 1 Analysis Time..: 00:00

NOTE(S):

Calculations are performed before rounding to avoid round-off errors in calculated results.

SAMPLE DUPLICATE EVALUATION REPORT

General Chemistry

Client Lot #...: F1C280473 **Work Order #...:** MF9GH-SMP MF9GH-DUP **Matrix.....:** WATER

Date Sampled...: 03/28/11 11:15 **Date Received..:** 03/28/11

PARAM	RESULT	DUPLICATE RESULT	UNITS	RPD	RPD LIMIT	METHOD	PREPARATION-ANALYSIS DATE	PREP BATCH #
COD						SD Lot-Sample #:	F1C280473-001	
	42.0	36.0	mg/L	15	(0-20)	MCAWW 410.4	03/30-03/31/11	1090116
			Dilution Factor: 1			Analysis Time..: 00:00		
Total Suspended Solids						SD Lot-Sample #:	F1C280473-001	
	ND	ND	mg/L	0	(0-20)	MCAWW 160.2	03/30-03/31/11	1089339
			Dilution Factor: 1			Analysis Time..: 00:00		
pH (liquid)						SD Lot-Sample #:	F1C280473-001	
	6.9	6.9	No Units	0.15	(0-0.0)	SW846 9040	03/29/11	1088338
			Dilution Factor: 1			Analysis Time..: 16:40		

AECOM Technical Services Inc.

Client Sample ID: 60162412-SMP-PL5-WA-OTH-0368

Radiochemistry

Lab Sample ID: F1C280473-001
Work Order: MF9GH
Matrix: WATER

Date Collected: 03/28/11 1115
Date Received: 03/28/11 1346

Parameter	Result	Qual	Total Uncert. (2 σ+/-)	RL	mdc	Prep Date	Analysis Date
Iso THORIUM (SHORT CT) DOE A-01-R MOD				**pCi/L**		**Batch # 1088032**	**Yld % 65**
Thorium 228	0.02	U	0.10	1.00	0.22	03/29/11	03/29/11
Thorium 230	0.12	U	0.14	1.00	0.20	03/29/11	03/29/11
Thorium 232	0.007	U	0.058	1.00	0.16	03/29/11	03/29/11
Iso URANIUM (SHORT CT) DOE A-01-R MOD				**pCi/L**		**Batch # 1088033**	**Yld % 88**
Uranium 234	0.040	U	0.076	1.00	0.14	03/29/11	03/29/11
Uranium 235/236	-0.01	U	0.014	1.00	0.13	03/29/11	03/29/11
Uranium 238	0.026	U	0.062	1.00	0.12	03/29/11	03/29/11
Gross Alpha/Beta EPA 900				**pCi/L**		**Batch # 1088086**	**Yld %**
Gross Alpha	1	U	1.5	3.0	2.4	03/29/11	04/01/11
Gross Beta	-0.05	U	0.56	4.00	0.98	03/29/11	04/01/11
Radium 226 by EPA 903.0 MOD				**pCi/L**		**Batch # 1087344**	**Yld % 88**
Radium (226)	0.72	J	0.21	1.00	0.16	03/28/11	03/31/11
Radium 228 by GFPC EPA 904 MOD				**pCi/L**		**Batch # 1087345**	**Yld % 91**
Radium 228	0.06	U	0.20	1.00	0.35	03/28/11	04/01/11

NOTE(S)

Data are incomplete without the case narrative.

MDC is determined by instrument performance only.
Bold results are greater than the MDC.

J Result is greater than sample detection limit but less than stated reporting limit.
U Result is less than the sample detection limit.

METHOD BLANK REPORT

Radiochemistry

Client Lot ID: F1C280473
Matrix: WATER

Parameter	Result	Qual	Total Uncert. (2 σ+/-)	RL	MDC		Prep Date	Lab Sample ID / Analysis Date
Gross Alpha/Beta EPA 900			pCi/L	Batch # 1088086		Yld %		F1C290000-086B
Gross Alpha	-0.12	U	0.35	2.00	0.79		03/29/11	04/01/11
Gross Beta	0.25	U	0.52	4.00	0.87		03/29/11	04/01/11
Radium 226 by EPA 903.0 MOD			pCi/L	Batch # 1087344		Yld % 89		F1C280000-344B
Radium (226)	0.04	U	0.10	1.00	0.19		03/28/11	03/31/11
Radium 228 by GFPC EPA 904 MOD			pCi/L	Batch # 1087345		Yld % 90		F1C280000-345B
Radium 228	0.30	U	0.22	1.00	0.33		03/28/11	04/01/11
Iso THORIUM (SHORT CT) DOE A-01-R MOD			pCi/L	Batch # 1088032		Yld % 77		F1C290000-032B
Thorium 228	-0.013	U	0.015	1.00	0.13		03/29/11	03/29/11
Thorium 230	**0.070**		**0.081**	1.00	**0.063**		**03/29/11**	**03/29/11**
Thorium 232	-0.0044	U	0.0087	1.00	0.099		03/29/11	03/29/11
Iso URANIUM (SHORT CT) DOE A-01-R MOD			pCi/L	Batch # 1088033		Yld % 86		F1C290000-033B
Uranium 234	0.043	U	0.061	1.00	0.059		03/29/11	03/29/11
Uranium 235/236	0.0	U	0.023	1.00	0.073		03/29/11	03/29/11
Uranium 238	0.0	U	0.019	1.00	0.058		03/29/11	03/29/11

NOTE(S)

Data are incomplete without the case narrative.

MDC is determined using instrument performance only
Bold results are greater than the MDC.

U Result is less than the sample detection limit.

Laboratory Control Sample Report

Radiochemistry

Client Lot ID: F1C280473
Matrix: WATER

Parameter	Spike Amount	Result	Total Uncert. (2 σ+/-)	MDC	% Yld	% Rec	Lab Sample ID / QC Control Limits
Iso THORIUM (SHORT CT) DOE A-01-R MOD			**pCi/L**	**A-01-R MOD**			**F1C290000-032C**
Thorium 230	9.49	9.4	1.2	0.1	91	99	(79 - 122)
	Batch #:	1088032		Analysis Date:	03/29/11		
Iso URANIUM (SHORT CT) DOE A-01-R MOD			**pCi/L**	**A-01-R MOD**			**F1C290000-033C**
Uranium 234	13.1	14.1	1.7	0.06	79	108	(83 - 130)
Uranium 238	13.6	13.6	1.6	0.1	79	100	(86 - 128)
	Batch #:	1088033		Analysis Date:	03/29/11		
Gross Alpha/Beta EPA 900			**pCi/L**	**900.0 MOD**			**F1C290000-086C**
Gross Alpha	49.4	61.4	6.6	1.1		124	(83 - 128)
Gross Beta	66.4	69.8	5.9	0.9		105	(90 - 115)
	Batch #:	1088086		Analysis Date:	04/01/11		

NOTE(S)

MDC is determined by instrument performance only
Calculations are performed before rounding to avoid round-off error in calculated results

Laboratory Control Sample/LCS Duplicate Report

Radiochemistry

Client Lot ID: F1C280473
Matrix: WATER

Parameter		Spike Amount	Result	Total Uncert. (2 σ+/-)	% Yld	% Rec	QC Control Limits	Precision	
Radium 226 by EPA 903.0 MOD			pCi/L	903.0 MOD				Lab Sample ID F1C280000-344C	
Radium (226)		11.3	11.4	1.2	87	101	(62 - 136)		
	Spk 2	11.3	11.5	1.2	87	102	(62 - 136)	1	%RPD
		Batch #:	1087344		Analysis Date:		03/31/11		
Radium 228 by GFPC EPA 904 MOD			pCi/L	904 MOD				F1C280000-345C	
Radium 228		5.62	6.57	0.75	92	117	(69 - 140)		
	Spk 2	5.62	6.09	0.70	94	108	(69 - 140)	8	%RPD
		Batch #:	1087345		Analysis Date:		04/01/11		

NOTE(S)

Calculations are performed before rounding to avoid round-off error in calculated results

MATRIX SPIKE REPORT

Radiochemistry

Client Lot Id: F1C010456 Date Sampled: 02/18/11
Matrix: WATER Date Received: 03/01/11

Parameter	Spike Amount	Spike Result	Total Uncert. (2σ +/-)	Spike Yld.	Sample Result	Total Uncert. (2 σ +/-)	QC Sample ID %YLD	QC Sample ID %REC	QC Control Limits
Gross Alpha/Beta EPA 900			pCi/L		900.0 MOD			F1C010456-002	
Gross Beta	201	202	17		11.4	2.8		95	(51-150)
	Batch #:	1088086		Analysis Date:		04/01/11			
Gross Alpha/Beta EPA 900			pCi/L		900.0 MOD			F1C010456-002	
Gross Alpha	150	125	17		8.1	4.2		78	(34-150)
	Batch #:	1088086		Analysis Date:		04/01/11			

NOTE(S)

Data are incomplete without the case narrative.

Calculations are performed before rounding to avoid round-off errors in calculated results.

DUPLICATE EVALUATION REPORT

Radiochemistry

Client Lot ID: F1C280473 Date Sampled: 02/18/11
Matrix: WATER Date Received: 03/01/11

Parameter	SAMPLE Result		Total Uncert. (2σ+/-)	% Yld	DUPLICATE Result		Total Uncert. (2σ+/-)	% Yld	QC Sample ID Precision	
Gross Alpha/Beta EPA 900				pCi/L	900.0 MOD				F1C010456-002	
Gross Alpha	8.1		4.2		7.1		4.1		14	%RPD
Gross Beta	11.4		2.8		8.3		2.6		31	%RPD
	Batch #:		1088086	(Sample)	1088086		(Duplicate)			
Iso THORIUM (SHORT CT) DOE A-01-R MOD				pCi/L	A-01-R MOD				F1C280473-001	
Thorium 228	0.02	U	0.10	65	-0.03	U	0.11	55	808	%RPD
Thorium 230	0.12	U	0.14	65	0.14	U	0.15	55	19	%RPD
Thorium 232	0.007	U	0.058	65	0.033	U	0.066	55	131	%RPD
	Batch #:		1088032	(Sample)	1088032		(Duplicate)			
Iso URANIUM (SHORT CT) DOE A-01-R MOD				pCi/L	A-01-R MOD				F1C280473-001	
Uranium 234	0.040	U	0.076	88	-0.026	U	0.021	82	928	%RPD
Uranium 235/236	-0.01	U	0.014	88	0.028	U	0.057	82	414	%RPD
Uranium 238	0.026	U	0.062	88	-0.0043	U	0.0085	82	277	%RPD
	Batch #:		1088033	(Sample)	1088033		(Duplicate)			

NOTE(S)

Data are incomplete without the case narrative.
Calculations are performed before rounding to avoid round-off error in calculated results

U Result is less than the sample detection limit.

F1C280473 CLIENT ANALYSIS SUMMARY

Storage Loc: R25,1-41,METS,V

Project Manager: JA | Quote #: 87754 | SDG: F1C280473

Project: Mallinckrodt St. Louis Plant

PO#: 10372ACM | Report to: Mark Tepperman

Client: 404224 AECOM Technical Services Inc.

RUSH

#SMPS in LOT: 2

Date Received: 2011-03-28

Analytical Due Date: 2011-04-01

Report Due Date: 2011-04-04

Report Type: D Expanded Deliverable

EDD Code: 00

SAMPLE LOGIN: enter lot # into SDG field. Gamma Spec is as received for 5 BD TAT. Gamma Ra226, Iso U and Iso Th will be logged when initial count is complete.
Log ZHE EXTRACTION line item for TCLP VOA. Log TCLP EXTRACTION line item for TCLP analyses. RAD: Initial Gamma Spec counted as received. When complete dry/grind and prep for Gamma Ra226,TAR,Iso U and Iso Th. GAMMA SPEC. SHOULD BE COUNTED IN CLIENTS 500ML MARINELLI. RA226/228 - NO INGROWTH REQUIRED!!!
All depts.: standard QC required

SAMPLE #	CLIENT SAMPLE ID	Site ID	Client Matrix	DATE/TIME SAMPLED	WORKORDER	I
1	60162412-SMP-PL5-WA-OTH-036			2011-03-28 / 1115	MF9GH	WATER

SAMPLE COMMENTS:

	ZN	QM	SW846	6010B	WATER, ICP Metals ✓	GJ	METALS, TOTAL - 2% HCL	01	STANDARD TEST SET	PROT: M	WRK LOC	06	
	CR	QM	SW846	6010B	WATER, ICP Metals	GJ	METALS, TOTAL - 2% HCL	01	STANDARD TEST SET	PROT: M	WRK LOC	06	
	CU	QM	SW846	6010B	WATER, ICP Metals	GJ	METALS, TOTAL - 2% HCL	01	STANDARD TEST SET	PROT: M	WRK LOC	06	
	FE	QM	SW846	6010B	WATER, ICP Metals	GJ	METALS, TOTAL - 2% HCL	01	STANDARD TEST SET	PROT: M	WRK LOC	06	
	NI	QM	SW846	6010B	WATER, ICP Metals	GJ	METALS, TOTAL - 2% HCL	01	STANDARD TEST SET	PROT: M	WRK LOC	06	
	PB	QM	SW846	6010B	WATER, ICP Metals	GJ	METALS, TOTAL - 2% HCL	01	STANDARD TEST SET	PROT: M	WRK LOC	06	
	CD	QM	SW846	6010B	WATER, ICP Metals	GJ	METALS, TOTAL - 2% HCL	01	STANDARD TEST SET	PROT: M	WRK LOC	06	
	XX	DN	CFR13 8A	624	WATER, 624, VOA ✓	25	PURGE AND TRAP - 25 mL purge (Waters)	01	STANDARD TEST SET	PROT: O	WRK LOC	06	TIC: N
	XX	ZZ	NONE	NONE	WATER, RAD SCREEN ✓	88	NO SAMPLE PREPARATION PERFORMED / DIRECT	01	STANDARD TEST SET	PROT: A	WRK LOC	06	
	XX	2I	EML	A-01-R MOD	WATER, Iso URANIUM (SHORT CT) ✓	J2	Extraction Chromatography - Sequential Actinides	01	STANDARD TEST SET	PROT: R	WRK LOC	06	
	XX	2K	EML	A-01-R MOD	WATER, Iso THORIUM (SHORT CT) ✓	J2	Extraction Chromatography - Sequential Actinides	01	STANDARD TEST SET	PROT: R	WRK LOC	06	
	XX	Y9	EPA	900.0 MOD	WATER, Gross Alpha/Beta ✓	FR	Evaporative Preparation, Total	01	STANDARD TEST SET	PROT: R	WRK LOC	06	
	XX	Z4	EPA	904 MOD	WATER, 904 MOD, Ra-228 (NO INGROWTH) ✓	N*	No Ingrowth	2X	SPECIAL PROJECTS	PROT: R	WRK LOC	06	
	XX	ZY	EPA	903.0 MOD	WATER, 903 MOD, Ra-226 (NO INGROWTH) ✓	N*	No Ingrowth	2X	SPECIAL PROJECTS	PROT: R	WRK LOC	06	
	XX	AL	MCAW W	160.2	WATER, 160.2, TSS ✓	88	NO SAMPLE PREPARATION PERFORMED / DIRECT	01	STANDARD TEST SET	PROT: W	WRK LOC	06	
	XX	FJ	SW846	9040	WATER, 9040, pH ✓	88	NO SAMPLE PREPARATION PERFORMED / DIRECT	01	STANDARD TEST SET	PROT: W	WRK LOC	06	
	XX	VO	MCAW W	410.4	WATER, 410.4, COD ✓	21	DIGESTION, NON-METAL/INORGANICS	01	STANDARD TEST SET	PROT: W	WRK LOC	06	
D	CR	QM	SW846	6010B	WATER, ICP Metals	GJ	METALS, TOTAL - 2% HCL	01	STANDARD TEST SET	PROT: M	WRK LOC	06	
D	CD	QM	SW846	6010B	WATER, ICP Metals	GJ	METALS, TOTAL - 2% HCL	01	STANDARD TEST SET	PROT: M	WRK LOC	06	
D	CU	QM	SW846	6010B	WATER, ICP Metals	GJ	METALS, TOTAL - 2% HCL	01	STANDARD TEST SET	PROT: M	WRK LOC	06	
D	ZN	QM	SW846	6010B	WATER, ICP Metals	GJ	METALS, TOTAL - 2% HCL	01	STANDARD TEST SET	PROT: M	WRK LOC	06	
D	PB	QM	SW846	6010B	WATER, ICP Metals	GJ	METALS, TOTAL - 2% HCL	01	STANDARD TEST SET	PROT: M	WRK LOC	06	
D	NI	QM	SW846	6010B	WATER, ICP Metals	GJ	METALS, TOTAL - 2% HCL	01	STANDARD TEST SET	PROT: M	WRK LOC	06	
D	FE	QM	SW846	6010B	WATER, ICP Metals	GJ	METALS, TOTAL - 2% HCL	01	STANDARD TEST SET	PROT: M	WRK LOC	06	
S	CD	QM	SW846	6010B	WATER, ICP Metals	GJ	METALS, TOTAL - 2% HCL	01	STANDARD TEST SET	PROT: M	WRK LOC	06	
S	CR	QM	SW846	6010B	WATER, ICP Metals	GJ	METALS, TOTAL - 2% HCL	01	STANDARD TEST SET	PROT: M	WRK LOC	06	
S	CU	QM	SW846	6010B	WATER, ICP Metals	GJ	METALS, TOTAL - 2% HCL	01	STANDARD TEST SET	PROT: M	WRK LOC	06	
S	NI	QM	SW846	6010B	WATER, ICP Metals	GJ	METALS, TOTAL - 2% HCL	01	STANDARD TEST SET	PROT: M	WRK LOC	06	
S	PB	QM	SW846	6010B	WATER, ICP Metals	GJ	METALS, TOTAL - 2% HCL	01	STANDARD TEST SET	PROT: M	WRK LOC	06	
S	ZN	QM	SW846	6010B	WATER, ICP Metals	GJ	METALS, TOTAL - 2% HCL	01	STANDARD TEST SET	PROT: M	WRK LOC	06	
S	FE	QM	SW846	6010B	WATER, ICP Metals	GJ	METALS, TOTAL - 2% HCL	01	STANDARD TEST SET	PROT: M	WRK LOC	06	
X	XX	2I	EML	A-01-R MOD	WATER, Iso URANIUM (SHORT CT)	J2	Extraction Chromatography - Sequential Actinides	01	STANDARD TEST SET	PROT: R	WRK LOC	06	
X	XX	2K	EML	A-01-R MOD	WATER, Iso THORIUM (SHORT CT)	J2	Extraction Chromatography - Sequential Actinides	01	STANDARD TEST SET	PROT: R	WRK LOC	06	

SAMPLE # CLIENT SAMPLE ID Site ID Client Matrix DATE/TIME SAMPLED WORKORDER I

F1C280473

CLIENT ANALYSIS SUMMARY

Storage Loc: V28

Date Received: 2011-03-28

Analytical Due Date: 2011-04-01

Report Due Date: 2011-04-04

Report Type: D Expanded Deliverable

EDD Code: 00

Project Manager: JA

Quote #: 87754 SDG: F1C280473

Project: Mallinckrodt St. Louis Plant

PO#: 10372ACM Report to: Mark Tepperman

Client: 404224 AECOM Technical Services Inc.

RUSH

#SMPS In LOT: 2

SAMPLE LOGIN: enter lot # into SDG field. Gamma Spec is as received for 5 BD TAT. Gamma Ra226, Iso U and Iso Th will be logged when initial count is complete.
Log ZHE EXTRACTION line item for TCLP VOA. Log TCLP EXTRACTION line item for TCLP analyses. RAD: initial Gamma Spec counted as received . When complete dry/grind and prep for Gamma Ra226,TAR,Iso U and Iso Th. GAMMA SPEC. SHOULD BE COUNTED IN CLIENTS 500ML MARINELLI. RA226/228 - NO INGROWTH REQUIRED!!!
All depts.: standard QC required

2 TRIP BLANK 2011-03-28 / 0 ✓ MF9GT WATER

SAMPLE COMMENTS:

XX DN CFR13 624 6A WATER, 624, VOA ✓ 25 PURGE AND TRAP - 25 mL purge (Waters) 01 STANDARD TEST SET PROT: O WRK LOC 06 TIC: N

Lot F1C280473

Cell 482

FIC280473

Chain of Custody Record

TestAmerica
THE LEADER IN ENVIRONMENTAL TESTING

St. Louis
3715 Rider Trail North
Earth City, MO 63045
Phone 314.298.8566 fax 314.298.8757

TestAmerica Laboratories, Inc.

Client Contact	Project Manager: Ed Palser	Site Contact: Casey Knuteson	Date: 03/28/11	COC No: XX 0368
AECOM	Tel/Fax: (618)444-5535	Lab Contact: Jayna Awold	Carrier: Test America	1 of 1 COCs
Address 8005 Outer Circle RD	Analysis Turnaround Time			Job No. 60162412
City/State/Zip Brooks City Base, TX 78235	Calendar (C) or Work Days (W) C			
(618)444-5535 Phone	TAT if different from Below			SDG No.
Phone FAX	☐ 2 weeks			
Project Name: Mallinckrodt C-T Decommissioning	■ 1 week			
Site: St. Louis Plant	☐ 2 days			
PO # 10372ACM	☐ 1 day			

Sample Identification	Sample Date	Sample Time	Sample Type	Matrix	# of Cont.	Filtered Sample	pH	TSS	COD	ICP Metals (Cd, Cr, Cu, Fe, Pb, Ni, Zn)	Volatile Organics (EPA Method 624)	Gross Alpha/Beta	Isotopic Uranium (Alpha Spectrometry)	Radium-226 (GFPC, no decay/ingrowth)	Radium-228 (GFPC - no decay/ingrowth)	Isotopic Thorium (Alpha Spectrometry)	n/a	n/a	n/a	n/a	n/a	n/a	n/a	n/a	Sample Specific Notes:	
60162412-SMP-P1.5-WA-OTH-0368	3/28/2011	11:15	Water	Water	12		x	x	x	x	x	x	x	x	x	x	n/a	n/a	n/a	n/a	n/a	n/a	n/a	n/a	* Further Testing if Gross Beta above 5x LLD, 50pCi/L, 30 pCi/L	
n/a n/a n/a n/a	n/a	n/a	n/a	n/a	n/a		n/a	n/a	n/a	n/a	n/a	n/a	n/a	n/a	n/a	n/a	n/a	n/a	n/a	n/a	n/a	n/a	n/a	n/a		
n/a n/a n/a n/a	n/a	n/a	n/a	n/a	n/a		n/a	n/a	n/a	n/a	n/a	n/a	n/a	n/a	n/a	n/a	n/a	n/a	n/a	n/a	n/a	n/a	n/a	n/a	n/a	n/a
n/a n/a n/a n/a	n/a	n/a	n/a	n/a	n/a		n/a	n/a	n/a	n/a	n/a	n/a	n/a	n/a	n/a	n/a	n/a	n/a	n/a	n/a	n/a	n/a	n/a	n/a	n/a	n/a
n/a n/a n/a n/a	n/a	n/a	n/a	n/a	n/a		n/a	n/a	n/a	n/a	n/a	n/a	n/a	n/a	n/a	n/a	n/a	n/a	n/a	n/a	n/a	n/a	n/a	n/a	n/a	n/a
n/a n/a n/a n/a	n/a	n/a	n/a	n/a	n/a		n/a	n/a	n/a	n/a	n/a	n/a	n/a	n/a	n/a	n/a	n/a	n/a	n/a	n/a	n/a	n/a	n/a	n/a	n/a	n/a
n/a n/a n/a n/a	n/a	n/a	n/a	n/a	n/a		n/a	n/a	n/a	n/a	n/a	n/a	n/a	n/a	n/a	n/a	n/a	n/a	n/a	n/a	n/a	n/a	n/a	n/a	n/a	n/a
n/a n/a n/a n/a	n/a	n/a	n/a	n/a	n/a		n/a	n/a	n/a	n/a	n/a	n/a	n/a	n/a	n/a	n/a	n/a	n/a	n/a	n/a	n/a	n/a	n/a	n/a	n/a	n/a
n/a n/a n/a n/a	n/a	n/a	n/a	n/a	n/a		n/a	n/a	n/a	n/a	n/a	n/a	n/a	n/a	n/a	n/a	n/a	n/a	n/a	n/a	n/a	n/a	n/a	n/a	n/a	n/a
n/a n/a n/a n/a	n/a	n/a	n/a	n/a	n/a		n/a	n/a	n/a	n/a	n/a	n/a	n/a	n/a	n/a	n/a	n/a	n/a	n/a	n/a	n/a	n/a	n/a	n/a	n/a	n/a
n/a n/a n/a n/a	n/a	n/a	n/a	n/a	n/a		n/a	n/a	n/a	n/a	n/a	n/a	n/a	n/a	n/a	n/a	n/a	n/a	n/a	n/a	n/a	n/a	n/a	n/a	n/a	n/a

Preservation Used: 1= Ice, 2= HCl; 3= H2SO4; 4=HNO3; 5=NaOH; 6= Other _____

Possible Hazard Identification
■ Non-Hazard ☐ Flammable ☐ Skin Irritant Poison B ☐ Unknown ☐

Sample Disposal (A fee may be assessed if samples are retained longer than 1 month)
☐ Return To Client ☐ Disposal By Lab ■ Archive For 1 Months

Special Instructions/QC Requirements & Comments: Possible hazards include radiological. Sample methods to comply with MSD Ordinance 12559 standards.

Both Frac tanks Discharge 003

Relinquished by:	Company:	Date/Time:	Received by:	Company:	Date/Time:
Tommy Moch	AE Com/TA	3/28/11 1255	[signature]	TA	3/28/11 1255
[signature]	TA	3/28/11 1346	[signature]	TA	3/28/11 1346

TestAmerica - St. Louis

TestAmerica
THE LEADER IN ENVIRONMENTAL TESTING

Lot #(s): F1C280473

CONDITION UPON RECEIPT FORM

Client: AECOM
Quote No: 87754
COC/RFA No: 0368
Initiated By: AB
482
Date: 3-28-11 Time: 1346

Shipping Information

Shipper: FedEx UPS DHL Courier Client Other: NT Multiple Packages: Y (N)

Shipping # (s):*		Sample Temperature (s):**	
1.	6.	1. 8	6.
2.	7.	2.	7.
3.	8.	3.	8.
4.	9.	4.	9.
5.	10.	5.	10.

*Numbered shipping lines correspond to Numbered Sample Temp lines

**Sample must be received at 4°C ± 2°C- If not, note contents below. Temperature variance does NOT affect the following: Metals-Liquid or Rad tests- Liquid or Solids

Condition (Circle "Y" for yes, "N" for no and "N/A" for not applicable):

1.	Y (N)	Are there custody seals present on the cooler?	8.	Y (N)	Are there custody seals present on bottles?
2.	Y N (N/A)	Do custody seals on cooler appear to be tampered with?	9.	Y N (N/A)	Do custody seals on bottles appear to be tampered with?
3.	(Y) N	Were contents of cooler frisked after opening, but before unpacking?	10.	(Y) N N/A	Was sample received with proper pH[1]? (If not, make note below)
4.	(Y) N AB 3-29-11	Sample received with Chain of Custody?	11.	(Y) N	Sample received in proper containers?
5.	(Y) N N/A	Does the Chain of Custody match sample ID's on the container(s)?	12.	Y (N) N/A	Headspace in VOA or TOX liquid samples? (If Yes, note sample ID's below)
6.	Y (N)	Was sample received broken?	13.	Y N (N/A)	Was Internal COC/Workshare received?
7.	(Y) N	Is sample volume sufficient for analysis?	14.	Y N (N/A)	Was pH taken by original TestAmerica lab?

[1] For DOE-AL (Pantex, LANL, Sandia) sites, pH of ALL containers received must be verified, EXCEPT VOA, TOX and soils.

Notes:
Sample just collected
received 2 trip blanks not on COC.

Corrective Action:
☐ Client Contact Name: Informed by:
☐ Sample(s) processed "as is"
☐ Sample(s) on hold until: If released, notify:
Project Management Review: Jayna Ewalt Date: 3/30/11

THIS FORM MUST BE COMPLETED AT THE TIME THE ITEMS ARE BEING CHECKED IN. IF ANY ITEM IS COMPLETED BY SOMEONE OTHER THAN THE INITIATOR, THEN THAT PERSON IS REQUIRED TO APPLY THEIR INITIAL AND THE DATE NEXT TO THAT ITEM.
ADMIN-0004, REVISED 10/21/08 \\Slsvr01\QA\FORMS\ST-LOUIS\ADMIN\Admin004 rev11.doc

Steve Grace

Mallinckrodt
21120596-00

From: Steve Grace
Sent: Friday, March 25, 2011 9:53 AM
To: 'Summers, Julie'
Subject: RE: CT Excavation Discharge 2 Request

Hello Julie,

A review of the laboratory analytical data for Discharge 002 from the C-T Phase II decommissioning activities indicated this batch meets MSD Ordinance 12559 standards along with those outlined in 10 CFR Part 20, Appendix B, Table 3, and is approved for discharge into a combined sewer identified on MSD's base map as Inlet 18D1-395C. As a general reminder, the discharge into the sewer must be controlled at a rate that will not surcharge the lines in that area. In addition, the volume of this batch of wastewater must be confirmed in writing no later than 28 days after the date of this discharge. The approval for Discharge 002 is valid for 30 days from the date of this email.

Please contact me should you have any questions or require additional information.

Thank you,
Steve Grace

From: Summers, Julie [mailto:Julie.Summers@Covidien.com]
Sent: Friday, March 25, 2011 8:02 AM
To: Steve Grace
Cc: Burke, Karen
Subject: CT Excavation Discharge 2 Request
Importance: High

Steve,

Mallinckrodt requests permission to discharge 21,000 gallons of treated rainwater and groundwater collected as part of the C-T Phase II decommissioning activities. The wastewater discharge will be identified as Discharge 002. The laboratory analytical results demonstrate that the discharge will comply with the requirements of the Metropolitan St. Louis Sewer District as set forth in their letter to Lisa Meyer dated January 21, 2011. In addition, the discharge meets the monthly average concentrations for release to sanitary sewers per the requirements of 10 CFR 20.2003. Both a discharge summary and the detailed laboratory analytical results are attached for your information.

Thanks,
Julie Summers
Environmental Manager
Covidien/Mallinckrodt
3600 North 2nd Street
St. Louis, MO 63147
314-654-1969 Phone
314-654-1251 Fax

TestAmerica
THE LEADER IN ENVIRONMENTAL TESTING

TestAmerica Laboratories, Inc.

ANALYTICAL REPORT

Mallinckrodt St. Louis Plant

Lot #: F1C110608

Mark Tepperman

AECOM Technical Services Inc.
8005 Outer Circle Road
Brooks Air Force Bas, TX 78235

TESTAMERICA LABORATORIES, INC.

Jayna Awalt
Project Manager

March 24, 2011

Case Narrative
LOT NUMBER: **F1C110608**

This report contains the analytical results for the two samples received under chain of custody by TestAmerica St. Louis on March 11, 2011. These samples are associated with your Mallinckrodt St. Louis Plant project.

The analytical results included in this report meet all applicable quality control procedure requirements except as noted in the following case narrative.

The test results in this report meet all NELAP requirements for parameters in which accreditations are held by TestAmerica St. Louis. Any exceptions to NELAP requirements are noted in the case narrative. The case narrative is an integral part of this report.

All chemical analysis results are based upon sample as received, wet weight, unless noted otherwise. All radiochemistry results are based upon sample as dried and ground with the exception of tritium, unless requested wet weight by the client.

Observations/Nonconformances
Reference the chain of custody and condition upon receipt report for any variations on receipt conditions and temperature of samples on receipt.

Volatile Organics Method 624
Batch: 1073120

The opening CCV (LCAL 3766) recovery was outside the upper QC limit (greater than 127% recovery) for Tetrachloroethene (134 %) indicating a potential high bias for this analyte in the samples associated with this CCV. Tetrachloroethene was not detected above the reporting limit in the associated samples and so sample data was not adversely affected by this excursion.
Affected Samples:
F1C110608 (1): 60162412-SMP-PL5-WA-OTH-0300
F1C110608 (2): TRIP BLANK

The LCS recoveries for Chloromethane, 1,1-Dichloroethene and Carbon Tetrachloride are outside the upper QC limits, indicating a potential positive bias for these analytes. These analytes were not detected above the reporting limit in the associated samples; therefore the sample data was not adversely affected by this excursion.
Affected Samples:
F1C110608 (1): 60162412-SMP-PL5-WA-OTH-0300
F1C110608 (2): TRIP BLANK

The MSD recovery for Chloromethane is outside the established QC limits. The RPD is within method acceptance criteria. The LCS recovery for Chloromethane was also outside of method acceptance criteria indicating a potential positive bias for this analyte in samples associated with this Batch QC. Chloromethane was not detected above the reporting limit in the associated samples. Sample data is not affected by this excursion and all sample data is included with this narrative.
Affected Samples:
F1C110608 (1): 60162412-SMP-PL5-WA-OTH-0300
F1C110608 (2): TRIP BLANK

The MS/MSD RPD values for Bromomethane, Carbon tetrachloride, Bromoform and trans-1,3-Dichloropropene are not within method acceptance criteria. MS/MSD recoveries are within QC limits demonstrating good extraction performance in the sample matrix.
Affected Samples:
F1C110608 (1): 60162412-SMP-PL5-WA-OTH-0300
F1C110608 (2): TRIP BLANK

Gross Alpha/Beta Method 900 MOD
Batch: 1073209

The Gross Alpha reporting limit was not met due to a reduction of sample size attributed to the sample's high residual mass. The analytical results are reported.
Affected Samples:
F1C110608 (1): 60162412-SMP-PL5-WA-OTH-0300

Radium 226 Method 903 MOD
Batch: 1070382

The Radium 226 LCS analyte recovery is outside the upper QC limit, indicating a potential positive bias for Radium 226. Sample was re-prepared/reanalyzed with comparable LCS results outside the QC limits. Samples for Radium-226/Radium-228 were prepared using a shared aliquot. In the preparation process, the Radium-226 and Radium-228 LCS spikes are added at the start of the process. The Radium-228 standard will contain some amount of Ra-224 (one of the progeny in the Ra-228 decay scheme). Ra-224 will co-precipitate with all other radium isotopes during the preparation/chemistry process. When counted without the normal waiting period (21 days) for Ra-226 analysis, Ra-224 (an alpha-emitting isotope) will present a high-bias to the Ra-226 result. As these samples were prepared/counted with only a few days of decay allowed for the short-lived alpha-emitting radium isotopes, the LCS result for Ra-226 appears with a high bias. Future analyses for this project will be performed with separate aliquots prepared for Ra-226 and Ra-228 to remove this bias to the LCS. The initial data is reported with this narrative.
Affected Samples:
F1C110608 (1): 60162412-SMP-PL5-WA-OTH-0300

There are no other observations or non-conformances associated with the analyses contained in this report.

METHODS SUMMARY

F1C110608

PARAMETER	ANALYTICAL METHOD	PREPARATION METHOD
pH Aqueous	SW846 9040	SW846 9040
Chemical Oxygen Demand	MCAWW 410.4	MCAWW 410.4
Gross Alpha/Beta EPA 900	EPA 900.0 MOD	EPA 900.0
Isotopic Thorium by Alpha Spectroscopy	EML A-01-R MOD	
Isotopic Uranium by Alpha Spectroscopy	EML A-01-R MOD	
Non-Filterable Residue (TSS)	MCAWW 160.2	MCAWW 160.2
Purgeables	CFR136A 624	SW846 5030B
Radium-226 by GFPC	EPA 903.0 MOD	EPA 903.0
Radium-228 by GFPC	EPA 904 MOD	EPA 904
Trace Inductively Coupled Plasma (ICP) Metals	SW846 6010B	

References:

CFR136A "Methods for Organic Chemical Analysis of Municipal and Industrial Wastewater", 40CFR, Part 136, Appendix A, October 26, 1984 and subsequent revisions.

EML "ENVIRONMENTAL MEASUREMENTS LABORATORY PROCEDURES MANUAL" HASL-300 28TH EDITION, VOLUME I and II DEPARTMENT OF ENERGY

EPA "EASTERN ENVIRONMENTAL RADIATION FACILITY RADIOCHEMISTRY PROCEDURES MANUAL" US EPA EPA 520/5-84-006 AUGUST 1984

MCAWW "Methods for Chemical Analysis of Water and Wastes", EPA-600/4-79-020, March 1983 and subsequent revisions.

SW846 "Test Methods for Evaluating Solid Waste, Physical/Chemical Methods", Third Edition, November 1986 and its updates.

SAMPLE SUMMARY

F1C110608

WO #	SAMPLE#	CLIENT SAMPLE ID	SAMPLED DATE	SAMP TIME
MFKGR	001	60162412-SMP-PL5-WA-OTH-0300	03/11/11	14:00
MFKG6	002	TRIP BLANK	03/11/11	14:00

NOTE(S):

- The analytical results of the samples listed above are presented on the following pages.
- All calculations are performed before rounding to avoid round-off errors in calculated results.
- Results noted as "ND" were not detected at or above the stated limit.
- This report must not be reproduced, except in full, without the written approval of the laboratory.
- Results for the following parameters are never reported on a dry weight basis: color, corrosivity, density, flashpoint, ignitability, layers, odor, paint filter test, pH, porosity pressure, reactivity, redox potential, specific gravity, spot tests, solids, solubility, temperature, viscosity, and weight.

AECOM Technical Services Inc.

Client Sample ID: 60162412-SMP-PL5-WA-OTH-0300

GC/MS Volatiles

Lot-Sample #...: F1C110608-001 Work Order #...: MFKGR1AJ Matrix.....: WATER
Date Sampled...: 03/11/11 14:00 Date Received..: 03/11/11
Prep Date.....: 03/11/11 Analysis Date..: 03/12/11
Prep Batch #...: 1073120 Analysis Time..: 07:53
Dilution Factor: 1

Method.....: CFR136A 624

PARAMETER	RESULT	REPORTING LIMIT	UNITS
Acrolein	ND	10	ug/L
Acrylonitrile	ND	10	ug/L
Benzene	ND	1.0	ug/L
Bromoform	ND	1.0	ug/L
Bromomethane	ND	2.0	ug/L
Carbon tetrachloride	ND	1.0	ug/L
Chlorobenzene	ND	1.0	ug/L
Chlorodibromomethane	ND	1.0	ug/L
Chloroethane	ND	2.0	ug/L
Chloroform	**0.11 J**	**1.0**	**ug/L**
Chloromethane	ND	2.0	ug/L
Dichlorobromomethane	ND	1.0	ug/L
1,1-Dichloroethane	ND	1.0	ug/L
1,2-Dichloroethane	ND	1.0	ug/L
1,1-Dichloroethene	ND	1.0	ug/L
1,2-Dichloroethene (total)	ND	2.0	ug/L
1,2-Dichloropropane	ND	1.0	ug/L
cis-1,3-Dichloropropene	ND	1.0	ug/L
trans-1,3-Dichloropropene	ND	1.0	ug/L
Ethylbenzene	ND	1.0	ug/L
Methylene chloride	ND	1.0	ug/L
1,1,2,2-Tetrachloroethane	ND	1.0	ug/L
Tetrachloroethene	ND	1.0	ug/L
Toluene	ND	1.0	ug/L
1,1,1-Trichloroethane	ND	1.0	ug/L
1,1,2-Trichloroethane	ND	1.0	ug/L
Trichloroethene	ND	1.0	ug/L
Vinyl chloride	ND	2.0	ug/L

SURROGATE	PERCENT RECOVERY	RECOVERY LIMITS
1,2-Dichloroethane-d4	80	(62 - 122)
Toluene-d8	108	(73 - 116)
4-Bromofluorobenzene	89	(68 - 118)

NOTE(S):

J Estimated result. Result is less than RL.

AECOM Technical Services Inc.

Client Sample ID: TRIP BLANK

GC/MS Volatiles

Lot-Sample #...: F1C110608-002 Work Order #...: MFKG61AA Matrix.....: WATER
Date Sampled...: 03/11/11 14:00 Date Received..: 03/11/11
Prep Date.....: 03/11/11 Analysis Date..: 03/12/11
Prep Batch #...: 1073120 Analysis Time..: 08:25
Dilution Factor: 1

Method.....: CFR136A 624

PARAMETER	RESULT	REPORTING LIMIT	UNITS
Acrolein	ND	10	ug/L
Acrylonitrile	ND	10	ug/L
Benzene	ND	1.0	ug/L
Bromoform	ND	1.0	ug/L
Bromomethane	ND	2.0	ug/L
Carbon tetrachloride	ND	1.0	ug/L
Chlorobenzene	ND	1.0	ug/L
Chlorodibromomethane	ND	1.0	ug/L
Chloroethane	ND	2.0	ug/L
Chloroform	ND	1.0	ug/L
Chloromethane	ND	2.0	ug/L
Dichlorobromomethane	ND	1.0	ug/L
1,1-Dichloroethane	ND	1.0	ug/L
1,2-Dichloroethane	ND	1.0	ug/L
1,1-Dichloroethene	ND	1.0	ug/L
1,2-Dichloroethene (total)	ND	2.0	ug/L
1,2-Dichloropropane	ND	1.0	ug/L
cis-1,3-Dichloropropene	ND	1.0	ug/L
trans-1,3-Dichloropropene	ND	1.0	ug/L
Ethylbenzene	ND	1.0	ug/L
Methylene chloride	ND	1.0	ug/L
1,1,2,2-Tetrachloroethane	ND	1.0	ug/L
Tetrachloroethene	ND	1.0	ug/L
Toluene	ND	1.0	ug/L
1,1,1-Trichloroethane	ND	1.0	ug/L
1,1,2-Trichloroethane	ND	1.0	ug/L
Trichloroethene	ND	1.0	ug/L
Vinyl chloride	ND	2.0	ug/L

SURROGATE	PERCENT RECOVERY	RECOVERY LIMITS
1,2-Dichloroethane-d4	72	(62 - 122)
Toluene-d8	105	(73 - 116)
4-Bromofluorobenzene	106	(68 - 118)

METHOD BLANK REPORT

GC/MS Volatiles

Client Lot #...: F1C110608 Work Order #...: MFLDK1AA Matrix.....: WATER
MB Lot-Sample #: F1C140000-120

Prep Date.....: 03/11/11 Analysis Time..: 23:41
Analysis Date..: 03/11/11 Prep Batch #...: 1073120
Dilution Factor: 1

PARAMETER	RESULT	REPORTING LIMIT	UNITS	METHOD
Acrolein	ND	10	ug/L	CFR136A 624
Acrylonitrile	ND	10	ug/L	CFR136A 624
Benzene	ND	1.0	ug/L	CFR136A 624
Bromoform	ND	1.0	ug/L	CFR136A 624
Bromomethane	ND	2.0	ug/L	CFR136A 624
Carbon tetrachloride	ND	1.0	ug/L	CFR136A 624
Chlorobenzene	ND	1.0	ug/L	CFR136A 624
Chlorodibromomethane	ND	1.0	ug/L	CFR136A 624
Chloroethane	ND	2.0	ug/L	CFR136A 624
Chloroform	ND	1.0	ug/L	CFR136A 624
Chloromethane	ND	2.0	ug/L	CFR136A 624
Dichlorobromomethane	ND	1.0	ug/L	CFR136A 624
1,1-Dichloroethane	ND	1.0	ug/L	CFR136A 624
1,2-Dichloroethane	ND	1.0	ug/L	CFR136A 624
1,1-Dichloroethene	ND	1.0	ug/L	CFR136A 624
1,2-Dichloroethene (total)	ND	2.0	ug/L	CFR136A 624
1,2-Dichloropropane	ND	1.0	ug/L	CFR136A 624
cis-1,3-Dichloropropene	ND	1.0	ug/L	CFR136A 624
trans-1,3-Dichloropropene	ND	1.0	ug/L	CFR136A 624
Ethylbenzene	ND	1.0	ug/L	CFR136A 624
Methylene chloride	ND	1.0	ug/L	CFR136A 624
1,1,2,2-Tetrachloroethane	ND	1.0	ug/L	CFR136A 624
Tetrachloroethene	ND	1.0	ug/L	CFR136A 624
Toluene	ND	1.0	ug/L	CFR136A 624
1,1,1-Trichloroethane	ND	1.0	ug/L	CFR136A 624
1,1,2-Trichloroethane	ND	1.0	ug/L	CFR136A 624
Trichloroethene	ND	1.0	ug/L	CFR136A 624
Vinyl chloride	ND	2.0	ug/L	CFR136A 624

SURROGATE	PERCENT RECOVERY	RECOVERY LIMITS
1,2-Dichloroethane-d4	94	(62 - 122)
Toluene-d8	105	(73 - 116)
4-Bromofluorobenzene	97	(68 - 118)

NOTE(S):

Calculations are performed before rounding to avoid round-off errors in calculated results.

LABORATORY CONTROL SAMPLE EVALUATION REPORT

GC/MS Volatiles

Client Lot #...: F1C110608 Work Order #...: MFLDK1AC-LCS Matrix.....: WATER
LCS Lot-Sample#: F1C140000-120 MFLDK1AD-LCSD
Prep Date.....: 03/11/11 Analysis Date..: 03/11/11
Prep Batch #...: 1073120 Analysis Time..: 14:22
Dilution Factor: 1

PARAMETER	PERCENT RECOVERY	RECOVERY LIMITS	RPD	RPD LIMITS	METHOD
Acrolein	101	(40 - 140)			CFR136A 624
	98	(40 - 140)	3.4	(0-20)	CFR136A 624
Acrylonitrile	133	(67 - 140)			CFR136A 624
	123	(67 - 140)	7.6	(0-20)	CFR136A 624
Benzene	103	(76 - 119)			CFR136A 624
	92	(76 - 119)	11	(0-20)	CFR136A 624
Bromoform	109	(71 - 139)			CFR136A 624
	97	(71 - 139)	12	(0-20)	CFR136A 624
Bromomethane	116	(67 - 140)			CFR136A 624
	120	(67 - 140)	3.4	(0-20)	CFR136A 624
Carbon tetrachloride	142 a	(73 - 140)			CFR136A 624
	134	(73 - 140)	6.2	(0-20)	CFR136A 624
Chlorobenzene	104	(80 - 115)			CFR136A 624
	92	(80 - 115)	13	(0-20)	CFR136A 624
Chlorodibromomethane	118	(74 - 140)			CFR136A 624
	110	(74 - 140)	6.6	(0-20)	CFR136A 624
Chloroethane	80	(36 - 140)			CFR136A 624
	73	(36 - 140)	8.7	(0-20)	CFR136A 624
Chloroform	105	(77 - 121)			CFR136A 624
	97	(77 - 121)	8.2	(0-20)	CFR136A 624
Chloromethane	161 a	(41 - 140)			CFR136A 624
	139	(41 - 140)	15	(0-20)	CFR136A 624
Dichlorobromomethane	104	(72 - 138)			CFR136A 624
	97	(72 - 138)	7.5	(0-20)	CFR136A 624
1,1-Dichloroethane	99	(71 - 124)			CFR136A 624
	91	(71 - 124)	8.2	(0-20)	CFR136A 624
1,2-Dichloroethane	96	(67 - 133)			CFR136A 624
	88	(67 - 133)	8.9	(0-20)	CFR136A 624
1,1-Dichloroethene	127 a	(77 - 120)			CFR136A 624
	111	(77 - 120)	13	(0-20)	CFR136A 624
1,2-Dichloropropane	101	(67 - 137)			CFR136A 624
	93	(67 - 137)	7.6	(0-20)	CFR136A 624
cis-1,3-Dichloropropene	88	(58 - 140)			CFR136A 624
	87	(58 - 140)	0.57	(0-20)	CFR136A 624
trans-1,3-Dichloropropene	83	(61 - 140)			CFR136A 624
	86	(61 - 140)	3.0	(0-20)	CFR136A 624
Ethylbenzene	109	(77 - 123)			CFR136A 624
	95	(77 - 123)	14	(0-20)	CFR136A 624
Methylene chloride	123	(62 - 127)			CFR136A 624
	111	(62 - 127)	11	(0-20)	CFR136A 624

(Continued on next page)

LABORATORY CONTROL SAMPLE EVALUATION REPORT

GC/MS Volatiles

Client Lot #...: F1C110608 Work Order #...: MFLDK1AC-LCS Matrix.....: WATER
LCS Lot-Sample#: F1C140000-120 MFLDK1AD-LCSD

PARAMETER	PERCENT RECOVERY	RECOVERY LIMITS	RPD	RPD LIMITS	METHOD
1,1,2,2-Tetrachloroethane	79	(61 - 128)			CFR136A 624
	68	(61 - 128)	15	(0-20)	CFR136A 624
Tetrachloroethene	139	(67 - 140)			CFR136A 624
	120	(67 - 140)	14	(0-20)	CFR136A 624
Toluene	102	(75 - 120)			CFR136A 624
	88	(75 - 120)	15	(0-20)	CFR136A 624
1,1,1-Trichloroethane	102	(81 - 125)			CFR136A 624
	94	(81 - 125)	7.3	(0-20)	CFR136A 624
1,1,2-Trichloroethane	95	(73 - 126)			CFR136A 624
	86	(73 - 126)	11	(0-20)	CFR136A 624
Trichloroethene	121	(76 - 126)			CFR136A 624
	108	(76 - 126)	11	(0-20)	CFR136A 624
Vinyl chloride	94	(58 - 129)			CFR136A 624
	82	(58 - 129)	14	(0-20)	CFR136A 624

SURROGATE	PERCENT RECOVERY	RECOVERY LIMITS
1,2-Dichloroethane-d4	82	(62 - 126)
	72	(62 - 126)
Toluene-d8	107	(78 - 119)
	90	(78 - 119)
4-Bromofluorobenzene	99	(73 - 115)
	78	(73 - 115)

NOTE(S):

Calculations are performed before rounding to avoid round-off errors in calculated results.

Bold print denotes control parameters

a *Spiked analyte recovery is outside stated control limits.*

MATRIX SPIKE SAMPLE EVALUATION REPORT

GC/MS Volatiles

Client Lot #...: F1C110608 Work Order #...: MFKGR1CA-MS Matrix.....: WATER
MS Lot-Sample #: F1C110608-001 MFKGR1CC-MSD
Date Sampled...: 03/11/11 14:00 Date Received..: 03/11/11
Prep Date.....: 03/11/11 Analysis Date..: 03/12/11
Prep Batch #...: 1073120 Analysis Time..: 08:50
Dilution Factor: 1

PARAMETER	PERCENT RECOVERY	RECOVERY LIMITS	RPD	RPD LIMITS	METHOD
Acrolein	98	(50 - 150)			CFR136A 624
	99	(50 - 150)	0.53	(0-20)	CFR136A 624
Acrylonitrile	123	(50 - 150)			CFR136A 624
	126	(50 - 150)	2.6	(0-20)	CFR136A 624
Benzene	98	(47 - 150)			CFR136A 624
	101	(47 - 150)	3.0	(0-20)	CFR136A 624
Bromoform	97	(45 - 150)			CFR136A 624
	124 p	(45 - 150)	24	(0-20)	CFR136A 624
Bromomethane	80	(41 - 150)			CFR136A 624
	122 p	(41 - 150)	41	(0-20)	CFR136A 624
Carbon tetrachloride	99	(70 - 140)			CFR136A 624
	121 p	(70 - 140)	21	(0-20)	CFR136A 624
Chlorobenzene	99	(54 - 145)			CFR136A 624
	103	(54 - 145)	3.7	(0-20)	CFR136A 624
Chlorodibromomethane	114	(64 - 148)			CFR136A 624
	138	(64 - 148)	19	(0-20)	CFR136A 624
Chloroethane	71	(28 - 150)			CFR136A 624
	80	(28 - 150)	12	(0-20)	CFR136A 624
Chloroform	97	(51 - 138)			CFR136A 624
	103	(51 - 138)	6.4	(0-20)	CFR136A 624
Chloromethane	137	(33 - 150)			CFR136A 624
	164 a	(33 - 150)	18	(0-20)	CFR136A 624
Dichlorobromomethane	100	(47 - 150)			CFR136A 624
	110	(47 - 150)	9.4	(0-20)	CFR136A 624
1,1-Dichloroethane	94	(59 - 150)			CFR136A 624
	98	(59 - 150)	3.8	(0-20)	CFR136A 624
1,2-Dichloroethane	87	(59 - 143)			CFR136A 624
	91	(59 - 143)	4.5	(0-20)	CFR136A 624
1,1-Dichloroethene	106	(48 - 150)			CFR136A 624
	105	(48 - 150)	1.4	(0-20)	CFR136A 624
1,2-Dichloropropane	95	(56 - 150)			CFR136A 624
	100	(56 - 150)	5.6	(0-20)	CFR136A 624
cis-1,3-Dichloropropene	96	(50 - 150)			CFR136A 624
	109	(50 - 150)	13	(0-20)	CFR136A 624
trans-1,3-Dichloropropene	92	(31 - 150)			CFR136A 624
	120 p	(31 - 150)	26	(0-20)	CFR136A 624
Ethylbenzene	106	(53 - 150)			CFR136A 624
	109	(53 - 150)	3.6	(0-20)	CFR136A 624
Methylene chloride	114	(38 - 150)			CFR136A 624
	108	(38 - 150)	5.7	(0-20)	CFR136A 624

(Continued on next page)

MATRIX SPIKE SAMPLE EVALUATION REPORT

GC/MS Volatiles

Client Lot #...: F1C110608 Work Order #...: MFKGR1CA-MS Matrix.....: WATER
MS Lot-Sample #: F1C110608-001 MFKGR1CC-MSD

PARAMETER	PERCENT RECOVERY	RECOVERY LIMITS	RPD	RPD LIMITS	METHOD
1,1,2,2-Tetrachloroethane	75	(46 - 150)			CFR136A 624
	80	(46 - 150)	6.3	(0-20)	CFR136A 624
Tetrachloroethene	125	(65 - 148)			CFR136A 624
	134	(65 - 148)	6.9	(0-20)	CFR136A 624
Toluene	96	(52 - 150)			CFR136A 624
	97	(52 - 150)	1.2	(0-20)	CFR136A 624
1,1,1-Trichloroethane	104	(54 - 150)			CFR136A 624
	113	(54 - 150)	7.7	(0-20)	CFR136A 624
1,1,2-Trichloroethane	95	(61 - 137)			CFR136A 624
	99	(61 - 137)	3.8	(0-20)	CFR136A 624
Trichloroethene	107	(71 - 150)			CFR136A 624
	117	(71 - 150)	8.9	(0-20)	CFR136A 624
Vinyl chloride	86	(33 - 150)			CFR136A 624
	92	(33 - 150)	6.9	(0-20)	CFR136A 624

SURROGATE	PERCENT RECOVERY	RECOVERY LIMITS
1,2-Dichloroethane-d4	69	(62 - 122)
	84	(62 - 122)
Toluene-d8	88	(73 - 116)
	87	(73 - 116)
4-Bromofluorobenzene	81	(68 - 118)
	84	(68 - 118)

NOTE(S):

Calculations are performed before rounding to avoid round-off errors in calculated results.

Bold print denotes control parameters

p Relative percent difference (RPD) is outside stated control limits.

a Spiked analyte recovery is outside stated control limits.

AECOM Technical Services Inc.

Client Sample ID: 60162412-SMP-PL5-WA-OTH-0300

TOTAL Metals

Lot-Sample #...: F1C110608-001 Matrix.....: WATER
Date Sampled...: 03/11/11 14:00 Date Received..: 03/11/11

PARAMETER	RESULT	REPORTING LIMIT	UNITS	METHOD	PREPARATION-ANALYSIS DATE	WORK ORDER #
Prep Batch #...: 1073101						
Cadmium	ND	5	ug/L	SW846 6010B	03/14-03/15/11	MFKGR1AA
		Dilution Factor: 1		Analysis Time..: 16:24		
Chromium	ND	10	ug/L	SW846 6010B	03/14-03/15/11	MFKGR1AC
		Dilution Factor: 1		Analysis Time..: 16:24		
Copper	15.4 B	25	ug/L	SW846 6010B	03/14-03/15/11	MFKGR1AD
		Dilution Factor: 1		Analysis Time..: 16:24		
Iron	ND	100	ug/L	SW846 6010B	03/14-03/15/11	MFKGR1AE
		Dilution Factor: 1		Analysis Time..: 16:24		
Nickel	16.6 B	40	ug/L	SW846 6010B	03/14-03/15/11	MFKGR1AF
		Dilution Factor: 1		Analysis Time..: 16:24		
Lead	14.5	10	ug/L	SW846 6010B	03/14-03/15/11	MFKGR1AG
		Dilution Factor: 1		Analysis Time..: 16:24		
Zinc	168	20	ug/L	SW846 6010B	03/14-03/15/11	MFKGR1AH
		Dilution Factor: 1		Analysis Time..: 16:24		

NOTE(S):

B Estimated result. Result is less than RL.

METHOD BLANK REPORT

TOTAL Metals

Client Lot #...: F1C110608 **Matrix.....:** WATER

PARAMETER	RESULT	REPORTING LIMIT	UNITS	METHOD	PREPARATION-ANALYSIS DATE	WORK ORDER #
MB Lot-Sample #: F1C140000-101 **Prep Batch #...:** 1073101						
Cadmium	ND	5	ug/L	SW846 6010B	03/14-03/15/11	MFLCE1AA
		Dilution Factor: 1				
		Analysis Time..: 16:10				
Chromium	ND	10	ug/L	SW846 6010B	03/14-03/15/11	MFLCE1AC
		Dilution Factor: 1				
		Analysis Time..: 16:10				
Copper	ND	25	ug/L	SW846 6010B	03/14-03/15/11	MFLCE1AD
		Dilution Factor: 1				
		Analysis Time..: 16:10				
Iron	ND	100	ug/L	SW846 6010B	03/14-03/15/11	MFLCE1AE
		Dilution Factor: 1				
		Analysis Time..: 16:10				
Lead	ND	10	ug/L	SW846 6010B	03/14-03/15/11	MFLCE1AG
		Dilution Factor: 1				
		Analysis Time..: 16:10				
Nickel	ND	40	ug/L	SW846 6010B	03/14-03/15/11	MFLCE1AF
		Dilution Factor: 1				
		Analysis Time..: 16:10				
Zinc	ND	20	ug/L	SW846 6010B	03/14-03/15/11	MFLCE1AH
		Dilution Factor: 1				
		Analysis Time..: 16:10				

NOTE(S):

Calculations are performed before rounding to avoid round-off errors in calculated results.

LABORATORY CONTROL SAMPLE EVALUATION REPORT

TOTAL Metals

Client Lot #...: F1C110608 **Matrix.....:** WATER

PARAMETER	PERCENT RECOVERY	RECOVERY LIMITS	METHOD	PREPARATION-ANALYSIS DATE	WORK ORDER #
LCS Lot-Sample#: F1C140000-101 **Prep Batch #...:** 1073101					
Cadmium	98	(80 - 120)	SW846 6010B	03/14-03/15/11	MFLCE1AJ
		Dilution Factor: 1	Analysis Time..: 16:17		
Chromium	95	(80 - 120)	SW846 6010B	03/14-03/15/11	MFLCE1AK
		Dilution Factor: 1	Analysis Time..: 16:17		
Copper	94	(80 - 120)	SW846 6010B	03/14-03/15/11	MFLCE1AL
		Dilution Factor: 1	Analysis Time..: 16:17		
Iron	102	(80 - 120)	SW846 6010B	03/14-03/15/11	MFLCE1AM
		Dilution Factor: 1	Analysis Time..: 16:17		
Nickel	95	(80 - 120)	SW846 6010B	03/14-03/15/11	MFLCE1AN
		Dilution Factor: 1	Analysis Time..: 16:17		
Lead	94	(80 - 120)	SW846 6010B	03/14-03/15/11	MFLCE1AP
		Dilution Factor: 1	Analysis Time..: 16:17		
Zinc	103	(80 - 120)	SW846 6010B	03/14-03/15/11	MFLCE1AQ
		Dilution Factor: 1	Analysis Time..: 16:17		

NOTE(S):

Calculations are performed before rounding to avoid round-off errors in calculated results.

MATRIX SPIKE SAMPLE EVALUATION REPORT

TOTAL Metals

Client Lot #...: F1C110608 **Matrix.....:** WATER
Date Sampled...: 03/11/11 14:00 **Date Received..:** 03/11/11

PARAMETER	PERCENT RECOVERY	RECOVERY LIMITS	RPD	RPD LIMITS	METHOD	PREPARATION-ANALYSIS DATE	WORK ORDER #
MS Lot-Sample #: F1C110608-001 **Prep Batch #...:** 1073101							
Cadmium	92	(75 - 125)			SW846 6010B	03/14-03/15/11	MFKGR1AU
	90	(75 - 125)	2.8	(0-20)	SW846 6010B	03/14-03/15/11	MFKGR1AV
		Dilution Factor: 1					
		Analysis Time..: 16:39					
Chromium	90	(75 - 125)			SW846 6010B	03/14-03/15/11	MFKGR1AW
	88	(75 - 125)	2.4	(0-20)	SW846 6010B	03/14-03/15/11	MFKGR1AX
		Dilution Factor: 1					
		Analysis Time..: 16:39					
Copper	90	(75 - 125)			SW846 6010B	03/14-03/15/11	MFKGR1A0
	88	(75 - 125)	2.0	(0-20)	SW846 6010B	03/14-03/15/11	MFKGR1A1
		Dilution Factor: 1					
		Analysis Time..: 16:39					
Iron	96	(75 - 125)			SW846 6010B	03/14-03/15/11	MFKGR1A2
	94	(75 - 125)	2.8	(0-20)	SW846 6010B	03/14-03/15/11	MFKGR1A3
		Dilution Factor: 1					
		Analysis Time..: 16:39					
Lead	87	(75 - 125)			SW846 6010B	03/14-03/15/11	MFKGR1A6
	87	(75 - 125)	0.30	(0-20)	SW846 6010B	03/14-03/15/11	MFKGR1A7
		Dilution Factor: 1					
		Analysis Time..: 16:39					
Nickel	88	(75 - 125)			SW846 6010B	03/14-03/15/11	MFKGR1A4
	86	(75 - 125)	2.8	(0-20)	SW846 6010B	03/14-03/15/11	MFKGR1A5
		Dilution Factor: 1					
		Analysis Time..: 16:39					
Zinc	100	(75 - 125)			SW846 6010B	03/14-03/15/11	MFKGR1A8
	97	(75 - 125)	2.9	(0-20)	SW846 6010B	03/14-03/15/11	MFKGR1A9
		Dilution Factor: 1					
		Analysis Time..: 16:39					

NOTE(S):

Calculations are performed before rounding to avoid round-off errors in calculated results.

AECOM Technical Services Inc.

Client Sample ID: 60162412-SMP-PL5-WA-OTH-0300

General Chemistry

Lot-Sample #...: F1C110608-001 Work Order #...: MFKGR Matrix.....: WATER
Date Sampled...: 03/11/11 14:00 Date Received..: 03/11/11

PARAMETER	RESULT	RL	UNITS	METHOD	PREPARATION-ANALYSIS DATE	PREP BATCH #
pH (liquid)	7.7	0.10	No Units	SW846 9040	03/11/11	1073192
		Dilution Factor: 1		Analysis Time..: 16:36		
COD	46.0	20.0	mg/L	MCAWW 410.4	03/15/11	1073169
		Dilution Factor: 1		Analysis Time..: 00:00		
Total Suspended Solids	ND	4.0	mg/L	MCAWW 160.2	03/17-03/18/11	1076082
		Dilution Factor: 1		Analysis Time..: 00:00		

SAMPLE DUPLICATE EVALUATION REPORT

General Chemistry

Client Lot #...: F1C110608 **Work Order #...:** MFKGR-SMP MFKGR-DUP **Matrix.....:** WATER

Date Sampled...: 03/11/11 14:00 **Date Received..:** 03/11/11

PARAM	RESULT	DUPLICATE RESULT	UNITS	RPD	RPD LIMIT	METHOD	PREPARATION-ANALYSIS DATE	PREP BATCH #
COD						SD Lot-Sample #:	F1C110608-001	
	46.0	49.0	mg/L	6.3	(0-20)	MCAWW 410.4	03/15/11	1073169
			Dilution Factor: 1			Analysis Time..: 00:00		
Total Suspended Solids						SD Lot-Sample #:	F1C110608-001	
	ND	ND	mg/L	0	(0-20)	MCAWW 160.2	03/17-03/18/11	1076082
			Dilution Factor: 1			Analysis Time..: 00:00		
pH (liquid)						SD Lot-Sample #:	F1C110608-001	
	7.7	7.7	No Units	0.26	(0-0.0)	SW846 9040	03/11/11	1073192
			Dilution Factor: 1			Analysis Time..: 16:36		

Laboratory Control Sample Report

Radiochemistry

Client Lot ID: F1C110608
Matrix: WATER

Parameter	Spike Amount	Result		Total Uncert. (2 σ+/-)	MDC	% Yld	% Rec	Lab Sample ID / QC Control Limits
Radium 226 by EPA 903.0 MOD			pCi/L		903.0 MOD			F1C110000-382C
Radium (226)	11.3	23.1	a	2.1	0.2	106	205 a	(62 - 136)
	Batch #:	1070382			Analysis Date:	03/17/11		
Gross Alpha/Beta EPA 900			pCi/L		900.0 MOD			F1C140000-209C
Gross Alpha	49.4	53.9		6.0	1.3		109	(83 - 128)
Gross Beta	66.3	70.1		5.9	1.0		106	(90 - 115)
	Batch #:	1073209			Analysis Date:	03/17/11		
Iso THORIUM (SHORT CT) DOE A-01-R MOD			pCi/L		A-01-R MOD			F1C150000-298C
Thorium 230	9.49	9.7		1.3	0.1	64	102	(79 - 122)
	Batch #:	1074298			Analysis Date:	03/16/11		
Iso URANIUM (SHORT CT) DOE A-01-R MOD			pCi/L		A-01-R MOD			F1C150000-299C
Uranium 234	13.1	13.7		1.7	0.1	72	105	(83 - 130)
Uranium 238	13.6	14.4		1.7	0.1	72	106	(86 - 128)
	Batch #:	1074299			Analysis Date:	03/16/11		

NOTE(S)

MDC is determined by instrument performance only
Calculations are performed before rounding to avoid round-off error in calculated results

a Spiked analyte outside of stated QC limits.

Laboratory Control Sample/LCS Duplicate Report

Radiochemistry

Client Lot ID: F1C110608
Matrix: WATER

Parameter		Spike Amount	Result	Total Uncert. (2 σ+/-)	% Yld	% Rec	QC Control Limits	Lab Sample ID Precision	
Radium 228 by GFPC EPA 904 MOD			pCi/L	904 MOD				F1C180000-118C	
Radium 228		5.64	5.61	0.67	90	99	(69 - 140)		
	Spk 2	5.64	6.50	0.74	94	115	(69 - 140)	15	%RPD
		Batch #:	1077118		Analysis Date:		03/23/11		

NOTE(S)

Calculations are performed before rounding to avoid round-off error in calculated results

a Spiked analyte outside of stated QC limits.

MATRIX SPIKE REPORT

Radiochemistry

Client Lot Id: F1C110608
Matrix: WATER

Date Sampled: 03/11/11
Date Received: 03/11/11

Parameter	Spike Amount	Spike Result	Total Uncert. (2σ +/-)	Spike Yld.	Sample Result	Total Uncert. (2 σ +/-)	QC Sample ID %YLD	QC Sample ID %REC	QC Control Limits
Gross Alpha/Beta EPA 900			**pCi/L**		**900.0 MOD**			**F1C110608-001**	
Gross Beta	204	227	19		14.1	3.0		104	(51-150)
	Batch #:	1073209		Analysis Date:		03/17/11			
Gross Alpha/Beta EPA 900			**pCi/L**		**900.0 MOD**			**F1C110608-001**	
Gross Alpha	152	180	24		8.6	5.5		112	(34-150)
	Batch #:	1073209		Analysis Date:		03/17/11			

NOTE(S)

Data are incomplete without the case narrative.

Calculations are performed before rounding to avoid round-off errors in calculated results.

DUPLICATE EVALUATION REPORT

Radiochemistry

Client Lot ID: F1C110608
Matrix: WATER

Date Sampled: 03/11/11
Date Received: 03/11/11

Parameter	SAMPLE Result		Total Uncert. (2σ+/-)	% Yld	DUPLICATE Result		Total Uncert. (2σ+/-)	% Yld	QC Sample ID Precision	
Iso THORIUM (SHORT CT) DOE A-01-R MOD				**pCi/L**	**A-01-R MOD**				**F1C110608-001**	
Thorium 228	-0.055	U	0.035	62	-0.0138	U	0.0995	59	120	%RPD
Thorium 230	0.04	U	0.11	62	0.14	U	0.14	59	112	%RPD
Thorium 232	0.0	U	0.025	62	-0.006	U	0.053	59	200	%RPD
	Batch #:		1074298	(Sample)	1074298		(Duplicate)			
Iso URANIUM (SHORT CT) DOE A-01-R MOD				**pCi/L**	**A-01-R MOD**				**F1C110608-001**	
Uranium 234	0.064	U	0.093	70	-0.009	U	0.012	73	264	%RPD
Uranium 235/236	-0.012	U	0.017	70	-0.011	U	0.015	73	11	%RPD
Uranium 238	-0.0049	U	0.0098	70	0.010	U	0.049	73	568	%RPD
	Batch #:		1074299	(Sample)	1074299		(Duplicate)			
Gross Alpha/Beta EPA 900				**pCi/L**	**900.0 MOD**				**F1C110608-001**	
Gross Alpha	8.6		5.5		13.3		6.1		43	%RPD
Gross Beta	14.1		3.0		15.6		3.2		10	%RPD
	Batch #:		1073209	(Sample)	1073209		(Duplicate)			
Radium 226 by EPA 903.0 MOD				**pCi/L**	**903.0 MOD**				**F1C110608-001**	
Radium (226)	4.37		0.56	103	4.35		0.58	98	0.3	%RPD
	Batch #:		1070382	(Sample)	1070382		(Duplicate)			

NOTE(S)

Data are incomplete without the case narrative.
Calculations are performed before rounding to avoid round-off error in calculated results

U Result is less than the sample detection limit.

F1C110608 CLIENT ANALYSIS SUMMARY

Storage Loc: V11,METS,3-123,

Project Manager: JA | Quote #: 87754 | SDG: F1C110608

Date Received: 2011-03-11

Project: | Mallinckrodt St. Louis Plant

Analytical Due Date: 2011-03-18

PO#: 10372ACM | Report to: Mark Tepperman

RUSH

Report Due Date: 2011-03-21

Client: 404224 AECOM Technical Services Inc.

Report Type: D Expanded Deliverable

#SMPS in LOT: 2 EDD Code: 00

SAMPLE LOGIN: enter lot # into SDG field. Gamma Spec is as received for 5 BD TAT. Gamma Ra226, Iso U and Iso Th will be logged when initial count is complete. Log ZHE EXTRACTION line item for TCLP VOA. Log TCLP EXTRACTION line item for TCLP analyses. RAD: initial Gamma Spec counted as received. When complete dry/grind and prep for Gamma Ra226,TAR,Iso U and Iso Th. GAMMA SPEC. SHOULD BE COUNTED IN CLIENTS 500ML MARINELLI. RA226/228 - NO INGROWTH REQUIRED!!! All depts.: standard QC required

SAMPLE #	CLIENT SAMPLE ID	Site ID	Client Matrix	DATE/TIME SAMPLED	WORKORDER	
1	60162412-SMP-PL5-WA-OTH-030			2011-03-11 / 1400	MFKGR	WATER

SAMPLE COMMENTS:

	CR	QM	SW846	6010B	WATER, ICP Metals	GJ	METALS, TOTAL - 2% HCL	01	STANDARD TEST SET	PROT: M	WRK LOC	06		
	CU	QM	SW846	6010B	WATER, ICP Metals	GJ	METALS, TOTAL - 2% HCL	01	STANDARD TEST SET	PROT: M	WRK LOC	06		
	FE	QM	SW846	6010B	WATER, ICP Metals	GJ	METALS, TOTAL - 2% HCL	01	STANDARD TEST SET	PROT: M	WRK LOC	06		
	NI	QM	SW846	6010B	WATER, ICP Metals	GJ	METALS, TOTAL - 2% HCL	01	STANDARD TEST SET	PROT: M	WRK LOC	06		
	PB	QM	SW846	6010B	WATER, ICP Metals	GJ	METALS, TOTAL - 2% HCL	01	STANDARD TEST SET	PROT: M	WRK LOC	06		
	ZN	QM	SW846	6010B	WATER, ICP Metals	GJ	METALS, TOTAL - 2% HCL	01	STANDARD TEST SET	PROT: M	WRK LOC	06		
	CD	QM	SW846	6010B	WATER, ICP Metals	GJ	METALS, TOTAL - 2% HCL	01	STANDARD TEST SET	PROT: M	WRK LOC	06		
	XX	DN	CFR136 A	624	WATER, 624, VOA	25	PURGE AND TRAP - 25 mL purge (Waters)	01	STANDARD TEST SET	PROT: O	WRK LOC	06	TIC: N	
	XX	ZZ	NONE	NONE	WATER, RAD SCREEN	88	NO SAMPLE PREPARATION PERFORMED / DIRECT	01	STANDARD TEST SET	PROT: A	WRK LOC	06		
	XX	2I	EML	A-01-R MOD	WATER, Iso URANIUM (SHORT CT)	J2	Extraction Chromatography - Sequential Actinides	01	STANDARD TEST SET	PROT: R	WRK LOC	06		
	XX	2K	EML	A-01-R MOD	WATER, Iso THORIUM (SHORT CT)	J2	Extraction Chromatography - Sequential Actinides	01	STANDARD TEST SET	PROT: R	WRK LOC	06		
	XX	Y9	EPA	900.0 MOD	WATER, Gross Alpha/Beta	FR	Evaporative Preparation, Total	01	STANDARD TEST SET	PROT: R	WRK LOC	06		
	XX	Z4	EPA	904 MOD	WATER, Radium 226	G2	Precipitate, Separation - 21 day Ingrowth	01	STANDARD TEST SET	PROT: R	WRK LOC	06		
	XX	ZY	EPA	903.0 MOD	WATER, Radium 226	G2	Precipitate, Separation - 21 day Ingrowth	01	STANDARD TEST SET	PROT: R	WRK LOC	06		
	XX	AL	MCAW W	160.2	WATER, 160.2, TSS	88	NO SAMPLE PREPARATION PERFORMED / DIRECT	01	STANDARD TEST SET	PROT: W	WRK LOC	06		
	XX	FJ	SW846	9040	WATER, 9040, pH	88	NO SAMPLE PREPARATION PERFORMED / DIRECT	01	STANDARD TEST SET	PROT: W	WRK LOC	06		
	XX	VO	MCAW W	410.4	WATER, 410.4, COD	21	DIGESTION, NON-METAL/INORGANICS	01	STANDARD TEST SET	PROT: W	WRK LOC	06		
D	PB	QM	SW846	6010B	WATER, ICP Metals	GJ	METALS, TOTAL - 2% HCL	01	STANDARD TEST SET	PROT: M	WRK LOC	06		
D	CD	QM	SW846	6010B	WATER, ICP Metals	GJ	METALS, TOTAL - 2% HCL	01	STANDARD TEST SET	PROT: M	WRK LOC	06		
D	CR	QM	SW846	6010B	WATER, ICP Metals	GJ	METALS, TOTAL - 2% HCL	01	STANDARD TEST SET	PROT: M	WRK LOC	06		
D	CU	QM	SW846	6010B	WATER, ICP Metals	GJ	METALS, TOTAL - 2% HCL	01	STANDARD TEST SET	PROT: M	WRK LOC	06		
D	ZN	QM	SW846	6010B	WATER, ICP Metals	GJ	METALS, TOTAL - 2% HCL	01	STANDARD TEST SET	PROT: M	WRK LOC	06		
D	NI	QM	SW846	6010B	WATER, ICP Metals	GJ	METALS, TOTAL - 2% HCL	01	STANDARD TEST SET	PROT: M	WRK LOC	06		
D	FE	QM	SW846	6010B	WATER, ICP Metals	GJ	METALS, TOTAL - 2% HCL	01	STANDARD TEST SET	PROT: M	WRK LOC	06		
D	XX	DN	CFR136 A	624	WATER, 624, VOA	25	PURGE AND TRAP - 25 mL purge (Waters)	01	STANDARD TEST SET	PROT: O	WRK LOC	06	TIC: N	
S	ZN	QM	SW846	6010B	WATER, ICP Metals	GJ	METALS, TOTAL - 2% HCL	01	STANDARD TEST SET	PROT: M	WRK LOC	06		
S	CD	QM	SW846	6010B	WATER, ICP Metals	GJ	METALS, TOTAL - 2% HCL	01	STANDARD TEST SET	PROT: M	WRK LOC	06		
S	CR	QM	SW846	6010B	WATER, ICP Metals	GJ	METALS, TOTAL - 2% HCL	01	STANDARD TEST SET	PROT: M	WRK LOC	06		
S	CU	QM	SW846	6010B	WATER, ICP Metals	GJ	METALS, TOTAL - 2% HCL	01	STANDARD TEST SET	PROT: M	WRK LOC	06		
S	FE	QM	SW846	6010B	WATER, ICP Metals	GJ	METALS, TOTAL - 2% HCL	01	STANDARD TEST SET	PROT: M	WRK LOC	06		
S	NI	QM	SW846	6010B	WATER, ICP Metals	GJ	METALS, TOTAL - 2% HCL	01	STANDARD TEST SET	PROT: M	WRK LOC	06		
S	PB	QM	SW846	6010B	WATER, ICP Metals	GJ	METALS, TOTAL - 2% HCL	01	STANDARD TEST SET	PROT: M	WRK LOC	06		
S	XX	DN	CFR136 A	624	WATER, 624, VOA	25	PURGE AND TRAP - 25 mL purge (Waters)	01	STANDARD TEST SET	PROT: O	WRK LOC	06	TIC: N	
S	XX	Y9	EPA	900.0 MOD	WATER, Gross Alpha/Beta	FR	Evaporative Preparation, Total	01	STANDARD TEST SET	PROT: R	WRK LOC	06		

F1C110608

CLIENT ANALYSIS SUMMARY

Storage Loc: V11,METS,3-123,

Project Manager: JA | Quote #: 87754 | SDG: F1C110608

Date Received: 2011-03-11

Analytical Due Date: 2011-03-18

Project: Mallinckrodt St. Louis Plant

PO#: 10372ACM | Report to: Mark Tepperman

RUSH

Report Due Date: 2011-03-21

Client: 404224 AECOM Technical Services Inc.

Report Type: D Expanded Deliverable

#SMPS In LOT: 2 | EDD Code: 00

SAMPLE LOGIN: enter lot # into SDG field. Gamma Spec is as received for 5 BD TAT. Gamma Ra228, Iso U and Iso Th will be logged when initial count is complete.
Log ZHE EXTRACTION line item for TCLP VOA. Log TCLP EXTRACTION line item for TCLP analyses. RAD: Initial Gamma Spec counted as received . When complete dry/grind and prep for Gamma Ra220,TAR,Iso U and Iso Th. GAMMA SPEC. SHOULD BE COUNTED IN CLIENT'S 600ML MARINELLI. RA228/228 - NO INGROWTH REQUIRED!!!
All depts.: standard QC required

S	XX	Y9	EPA	900.0 MOD	WATER, Gross Alpha/Beta	FR	Evaporative Preparation, Total	01	STANDARD TEST SET	PROT: R	WRK LOC	06	
S	XX	VO	MCAW W	410.4	WATER, 410.4, COD	21	DIGESTION, NON-METAL/INORGANICS	01	STANDARD TEST SET	PROT: W	WRK LOC	06	
X	XX	2I	EML	A-01-R MOD	WATER, Iso URANIUM (SHORT CT)	J2	Extraction Chromatography - Sequential Actinides	01	STANDARD TEST SET	PROT: R	WRK LOC	06	
X	XX	2K	EML	A-01-R MOD	WATER, Iso THORIUM (SHORT CT)	J2	Extraction Chromatography - Sequential Actinides	01	STANDARD TEST SET	PROT: R	WRK LOC	06	
X	XX	Y9	EPA	900.0 MOD	WATER, Gross Alpha/Beta	FR	Evaporative Preparation, Total	01	STANDARD TEST SET	PROT: R	WRK LOC	06	
X	XX	AL	MCAW W	160.2	WATER, 160.2, TSS	88	NO SAMPLE PREPARATION PERFORMED / DIRECT	01	STANDARD TEST SET	PROT: W	WRK LOC	06	
X	XX	FJ	SW846	9040	WATER, 9040, pH	88	NO SAMPLE PREPARATION PERFORMED / DIRECT	01	STANDARD TEST SET	PROT: W	WRK LOC	06	
X	XX	VO	MCAW W	410.4	WATER, 410.4, COD	21	DIGESTION, NON-METAL/INORGANICS	01	STANDARD TEST SET	PROT: W	WRK LOC	06	

SAMPLE #	CLIENT SAMPLE ID	Site ID	Client Matrix	DATE/TIME SAMPLED	WORKORDER	
2	TRIP BLANK			2011-03-11 / 1400	MFKG6	WATER

SAMPLE COMMENTS:

XX	DN	CFR136 624 A	WATER, 624, VOA	25	PURGE AND TRAP - 25 ml. purge (Waters)	01	STANDARD TEST SET	PROT: O	WRK LOC	06	TIC: N		

Richland

COR 21

2800 George Washington Way
Attn: Erika Jordan
Richland, WA 99354
Phone 509.375.3131 fax 509.375.5590

Chain of Custody Record

TestAmerica
THE LEADER IN ENVIRONMENTAL TESTING

TestAmerica Laboratories, Inc.

Client Contact	Project Manager: Mark Topperman	Site Contact: Ed Palser	Date: 03/11/11	COC No: 60162412-SMP-PL5-WA-OTH-0300
AECOM	Tel/Fax: (210) 271-0925 / (210) 271-3061	Lab Contact: Erika Jordan	Carrier: Test America	1 of 1 COCs
8005 Outer Circle Road	Analysis Turnaround Time			Job No. 60162412
Brooks-City Base, Texas 78235	Calendar (C) or Work Days (W)			
(210) 271-0925 Phone	TAT if different from Below			
(210) 271-3061 FAX	☐ 2 weeks			SDG No.
Project Name: COVIDIEN C-T	■ 1 week			
Site: Mallinckrodt-St. Louis	☐ 2 days			
P O # 10372ACM	☐ 1 day			

Sample Identification	Sample Date	Sample Time	Sample Type	Matrix	# of Cont.	Filtered Sample	pH	TSS	COD	ICP Metals (Cd,Cr, Cu, Fe, Pb, Ni, Zn)	Volatile Organics (Method 624)	Gross Alpha/Beta	Isotopic Uranium (Alpha Spectrometry)	Radium-226 (GFPC, no decay/ingrowth)	Radium 228 (GFPC, no decay/ingrowth)	Isotopic Thorium (Alpha Spectrometry)	Sample Specific Notes:
60162412-SMP-PL5-WA-OTH-0300	3/11/2011	1400	Water	Water	12	N	X	X	X	X	X	X	X	X	X	X	Further Testing is Gross Beta above 50 pci/L
TRIP BLANK	—	—	↓	↓	1												
TEMP BLANK	—	—	↓	↓	1												5xVOA, 500P, 250P, 3xVOA

Preservation Used: 1= Ice, 2= HCl; 3= H2SO4; 4=HNO3; 5=NaOH; 6= Other

Possible Hazard Identification
■ *Non-Hazard* ☐ *Flammable* ☐ *Skin Irritant* *Poison B* ☐ *Unknown* ☐

Sample Disposal (A fee may be assessed if samples are retained longer than 1 month)
☐ *Return To Client* ☐ *Disposal By Lab* ■ *Archive For* 1 *Months*

Special Instructions/QC Requirements & Comments: **Please email results to chris.knuteson@aecom.com** **Possible hazards include radiological. Sample methods to comply with MSD Ordinance 12559**

Relinquished by:	Company:	Date/Time:	Received by:	Company:	Date/Time:
Chris Knuteson	AECOM		Natale Theobald	Test America	
				TA	3/11/11 1615

Lot F1C110608

TestAmerica - St. Louis

TestAmerica
THE LEADER IN ENVIRONMENTAL TESTING

Lot #(s): F1C110608

CONDITION UPON RECEIPT FORM

Client: AECOM

Quote No: 87754

COC/RFA No: 60162412-SMP-PLS-WA-OTH-0300 27

Initiated By: BO Date: 3/11/11 Time: 1605

Shipping Information

Shipper: FedEx UPS DHL Courier Client Other: NT Multiple Packages: Y (N)

Shipping # (s):*		Sample Temperature (s):**	
1.	6.	1. 11	6.
2.	7.	2.	7.
3.	8.	3.	8.
4.	9.	4.	9.
5.	10.	5.	10.

*Numbered shipping lines correspond to Numbered Sample Temp lines

**Sample must be received at 4°C ± 2°C. If not, note contents below. Temperature variance does NOT affect the following: Metals-Liquid or Rad tests- Liquid or Solids

Condition (Circle "Y" for yes, "N" for no and "N/A" for not applicable):

1.	Y (N)	Are there custody seals present on the cooler?	8.	Y (N)	Are there custody seals present on bottles?
2.	Y N (N/A)	Do custody seals on cooler appear to be tampered with?	9.	Y N (N/A)	Do custody seals on bottles appear to be tampered with?
3.	(Y) N	Were contents of cooler frisked after opening, but before unpacking?	10.	(Y) N N/A	Was sample received with proper pH[1]? (If not, make note below)
4.	(Y) N	Sample received with Chain of Custody?	11.	(Y) N	Sample received in proper containers?
5.	(Y) N N/A	Does the Chain of Custody match sample ID's on the container(s)?	12.	Y (N) N/A	Headspace in VOA or TOX liquid samples? (If Yes, note sample ID's below)
6.	Y (N)	Was sample received broken?	13.	Y N (N/A)	Was Internal COC/Workshare received?
7.	(Y) N	Is sample volume sufficient for analysis?	14.	Y N (N/A)	Was pH taken by original TestAmerica lab?

[1] For DOE-AL (Pantex, LANL, Sandia) sites, pH of ALL containers received must be verified, EXCEPT VOA, TOX and soils.

Notes: Samples just collected

Sample labels have ID 60162412-300. Log COC ID per JA

Corrective Action:
- ☐ Client Contact Name: Informed by:
- ☐ Sample(s) processed "as is"
- ☐ Sample(s) on hold until: If released, notify:

Project Management Review: Jayna Awalt Date: 3/14/11

THIS FORM MUST BE COMPLETED AT THE TIME THE ITEMS ARE BEING CHECKED IN. IF ANY ITEM IS COMPLETED BY SOMEONE OTHER THAN THE INITIATOR, THEN THAT PERSON IS REQUIRED TO APPLY THEIR INITIAL AND THE DATE NEXT TO THAT ITEM.

ADMIN-0004, REVISED 10/21/08 \\Slsvr01\QA\FORMS\ST-LOUIS\ADMIN\Admin004 rev11.doc

Wastewater Discharge 002 - Analytical Results Summary

Sample ID: 60162412-SMP-PL5-WA-OTH-0300

Analyte	Units	Limit	Concentration	Qualifiers[1]
VOCs				
Acrolein	mg/L		< 0.01	U
Acrylonitrile	mg/L		< 0.01	U
Benzene	mg/L		< 0.001	U
Bromoform	mg/L		< 0.001	U
Bromomethane	mg/L		< 0.002	U
Carbon tetrachloride	mg/L		< 0.001	U
Chlorobenzene	mg/L		< 0.001	U
Chlorodibromomethane	mg/L		< 0.001	U
Chloroethane	mg/L		< 0.002	U
Chloroform	mg/L		0.00011	J
Chloromethane	mg/L		< 0.002	U
Dichlorobromomethane	mg/L		< 0.001	U
1,1- Dichloroethane	mg/L		< 0.001	U
1,2- Dichloroethane	mg/L		< 0.001	U
1,1- Dichloroethene	mg/L		< 0.001	U
1,2- Dichloroethane	mg/L		< 0.002	U
1,2- Dichloropropane	mg/L		< 0.001	U
cis-1,3-Dichloropropene	mg/L		< 0.001	U
trans-1,3-Dichloropropene	mg/L		< 0.001	U
Ethylbenzene	mg/L		< 0.001	U
Methylene Chloride	mg/L		< 0.001	U
1,1,2,2-Tetrachloroethane	mg/L		< 0.001	U
Tetra chloroethene	mg/L		< 0.001	U
Toluene	mg/L		< 0.001	U
1,1,1- Trichloroethane	mg/L		< 0.001	U
1,1,2- Trichloroethane	mg/L		< 0.001	U
Trichloroethene	mg/L		< 0.001	U
Vinyl Chloride	mg/L		< 0.002	U
Total Toxic Organics	*mg/L*	*5.844*	*< 0.050*	
Metals				
Cadmium	mg/L	0.7	< 0.005	U
Chromium	mg/L	5	< 0.01	U
Copper	mg/L	2.7	0.0154	
Iron	mg/L	150	< 0.1	U
Nickel	mg/L	2.3	0.0166	
Lead	mg/L	0.4	0.0145	
Zinc	mg/L	3	0.168	

Analyte	Units	Limit	Concentration	Qualifiers(1)
General Chemistry				
pH		5.5-11.5	7.7	
COD	mg/L	600	46	
TSS	mg/L	300	< 4	U
Radionuclides				
Gross Alpha	pCi/L	3,000	8.6	
Gross Beta	pCi/L	50	14.1	
Ra-226	pCi/L	10	4.37	A
Ra-228	pCi/L	30	0.93	
Th-228	pCi/L	2,000	< 0.22	U
Th-230	pCi/L	1,000	< 0.22	U
Th-232	pCi/L	300	< 0.08	U
U-234	pCi/L		< 0.14	U
U-235/6	pCi/L		< 0.16	U
U-238	pCi/L		< 0.11	U
Total Uranium	*pCi/L*	*3,000*	*< 0.186*	

10 CFR 20 Appendix B Table 3 Values

Analyte	Units	Limit	Discharge Concentration	Averaged Concentration
Ra-226	pCi/L	0.6	4.37	0.005
Ra-228	pCi/L	0.6	0.93	0.001
Th-228	pCi/L	2	0.22	0.000
Th-230	pCi/L	1	0.22	0.000
Th-232	pCi/L	0.3	0.08	0.000
U-234	pCi/L	3	0.14	0.000
U-235/6	pCi/L	3	0.16	0.000
U-238	pCi/L	3	0.11	0.000
Sum of Fractions	*pCi/L*	*1*	*n/a*	*0.011*

Discharge Volume (gals) = 21,000

Covidien averaging factor(2) = 0.001

Analyte	Units	Annual Limit	Discharge Activity	Year to Date Activity
Gross Radioactivity	Ci	1	1.8E-06	3.7E-06

Notes:

(1) 'J' indicates estimated value; 'U' indicates result less than sample detection limit; 'A' indicates value may be biased high based on QC results

(2) derived from discharge volume divided by a Covidien minimum average monthly volume (20,000,000 gal)

Steve Grace

Mallinckrodt
21120596-00

From: Steve Grace
Sent: Wednesday, March 23, 2011 2:01 PM
To: Summers, Julie
Cc: Burke, Karen
Subject: RE: Sample Results for CT Excavation Wastewater Discharge

Hello Julie,

A review of the laboratory analytical data for Discharge 001 from the C-T Phase II decommissioning activities indicated this batch meets MSD Ordinance 12559 standards along with those outlined in 10 CFR Part 20, Appendix B, Table 3, and is approved for discharge into a combined sewer identified on MSD's base map as Inlet 18D1-395C. As a general reminder, the discharge into the sewer must be controlled at a rate that will not surcharge the lines in that area. In addition, the volume of this batch of wastewater must be confirmed in writing no later than 28 days after the date of this discharge. The approval for Discharge 001 is valid for 30 days from the date of this email.

Please contact me should you have any questions or require additional information.

Thank you,
Steve Grace

From: Summers, Julie [mailto:Julie.Summers@Covidien.com]
Sent: Wednesday, March 23, 2011 12:46 PM
To: Steve Grace
Cc: Burke, Karen
Subject: Sample Results for CT Excavation Wastewater Discharge
Importance: High

Steve,

Mallinckrodt requests permission to discharge 21,000 gallons of treated rainwater and groundwater collected as part of the C-T Phase II decommissioning activities. The wastewater discharge will be identified as Discharge 001. The laboratory analytical results demonstrate that the discharge will comply with the requirements of the Metropolitan St. Louis Sewer District as set forth in their letter to Lisa Meyer dated January 21, 2011. In addition, the discharge meets the monthly average concentrations for release to sanitary sewers per the requirements of 10 CFR 20.2003. Both a discharge summary and the detailed laboratory analytical results are attached for your information.

Please reply to this email when permission to discharge is granted.

Thanks,
Julie Summers
Environmental Manager
Covidien/Mallinckrodt
3600 North 2nd Street
St. Louis, MO 63147
314-654-1969 Phone
314-654-1251 Fax

3/23/2011

Wastewater Discharge 001 - Analytical Results					
Analyte	Units	Limit		Concentration	Qualifiers[1]
General Chemistry					
pH		5.5-11		6.6	
TSS	mg/L	300	<	4	U
COD	mg/L	600		75	
Metals					
Cadmium	mg/L	0.7	<	0.005	U
Chromium	mg/L	5	<	0.01	U
Copper	mg/L	2.7	<	0.025	U
Iron	mg/L	150		0.203	
Nickel	mg/L	0.4		0.0165	
Lead	mg/L	2.3	<	0.01	U
Zinc	mg/L	3		0.106	
VOCs					
Acrolein	mg/L		<	0.01	U
Acrylonitrile	mg/L		<	0.01	U
Benzene	mg/L		<	0.001	U
Bromoform	mg/L		<	0.001	U
Bromomethane	mg/L		<	0.002	U
Carbon tetrachloride	mg/L		<	0.001	U
Chlorobenzene	mg/L		<	0.001	U
Chlorodibromomethane	mg/L		<	0.001	U
Chloroethane	mg/L		<	0.002	U
Chloroform	mg/L			0.0012	
Chloromethane	mg/L		<	0.002	U
Dichlorobromomethane	mg/L			0.00031	J
1,1- Dichloroethane	mg/L		<	0.001	U
1,2- Dichloroethane	mg/L		<	0.001	U
1,1- Dichloroethene	mg/L		<	0.001	U
1,2- Dichloroethane	mg/L		<	0.002	U
1,2- Dichloropropane	mg/L		<	0.001	U
cis-1,3-Dichloropropene	mg/L		<	0.001	U
trans-1,3-Dichloropropene	mg/L		<	0.001	U
Ethylbenzene	mg/L		<	0.001	U
Methylene Chloride	mg/L		<	0.001	U
1,1,2,2-Tetrachloroethane	mg/L		<	0.001	U
Tetra chloroethene	mg/L		<	0.001	U
Toluene	mg/L		<	0.001	U
1,1,1- Trichloroethane	mg/L		<	0.001	U
1,1,2- Trichloroethane	mg/L		<	0.001	U
Trichloroethene	mg/L		<	0.001	U
Vinyl Chloride	mg/L		<	0.002	U
Total Toxic Organics	*mg/L*	*5.844*		*0.051*	
Radionuclides					
Gross Alpha	pCi/L			7.6	
Gross Beta	pCi/L	50		11.4	
Ra-226	pCi/L	30		3.72	
Ra-228	pCi/L	30		1.08	
Th-230	pCi/L	1,000		0.04	
Th-232	pCi/L	300		0.036	
U-234	pCi/L			0.16	
U-235/6	pCi/L			0.007	
U-238	pCi/L			0.019	
Total Uranium	*pCi/L*	*3,000*		*0.186*	

(1) 'J' indicates estimated value; 'U' indicates result less than sample detection limit.

10 CFR 20 Appendix B Table 3 Values Discharge Volume (gals) = 21,000 Covidien averaging factor[2] = 0.001				
Analyte	**Units**	**Limit**	**Discharge Concentration**	**Averaged Concentration**
Ra-226	pCi/L	0.6	3.72	0.004
Ra-228	pCi/L	0.6	1.08	0.001
Th-228	pCi/L	2	0.01	0.000
Th-230	pCi/L	1	0.04	0.000
Th-232	pCi/L	0.3	0.036	0.000
U-234	pCi/L	3	0.16	0.000
U-235/6	pCi/L	3	0.007	0.000
U-238	pCi/L	3	0.019	0.000
Sum of Fractions	*pCi/L*	*1*	*n/a*	*0.010*
Analyte	**Units**	**Annual Limit**	**Discharge Activity**	**Year to Date Activity**
Gross Radioactivity	Ci	1	1.9E-06	1.9E-06

(2) derived from discharge volume divided by a Covidien minimum average monthly volume (20,000,000 gal)

TestAmerica
THE LEADER IN ENVIRONMENTAL TESTING

TestAmerica Laboratories, Inc.

ANALYTICAL REPORT

Mallinckrodt St. Louis Plant

Lot #: F1C080575

Mark Tepperman

AECOM Technical Services Inc.
8005 Outer Circle Road
Brooks Air Force Bas, TX 78235

TESTAMERICA LABORATORIES, INC.

Jayna Awalt
Project Manager

March 15, 2011

Case Narrative
LOT NUMBER: **F1C080575**

This report contains the analytical results for the two samples received under chain of custody by TestAmerica St. Louis on March 8, 2011. These samples are associated with your Mallinckrodt St. Louis Plant project.

The analytical results included in this report meet all applicable quality control procedure requirements except as noted in the following case narrative.

The test results in this report meet all NELAP requirements for parameters in which accreditations are held by TestAmerica St. Louis. Any exceptions to NELAP requirements are noted in the case narrative. The case narrative is an integral part of this report.

All chemical analysis results are based upon sample as received, wet weight, unless noted otherwise. All radiochemistry results are based upon sample as dried and ground with the exception of tritium, unless requested wet weight by the client.

Observations/Nonconformances
Reference the chain of custody and condition upon receipt report for any variations on receipt conditions and temperature of samples on receipt.

Volatile Organics Method 624
Batch: 1073120

The opening CCV (LCAL 3766) recovery was outside the upper QC limit (greater than 127% recovery) for Tetrachloroethene (134 %) indicating a potential high bias for this analyte in the samples associated with this CCV. Tetrachloroethene was not detected above the reporting limit in the associated samples; therefore the sample data was not affected by this excursion.
Affected Samples:
F1C080575 (1): 60162412-SMP-PL5-WA-OTH-0281
F1C080575 (2): TRIP BLANK

The LCS recoveries for Chloromethane, 1,1-Dichloroethene and Carbon Tetrachloride were outside the upper QC limits, indicating a potential positive bias for these analytes. These analytes were not detected above the reporting limit in the associated samples; therefore the sample data was not adversely affected by this excursion.
Affected Samples:
F1C080575 (1): 60162412-SMP-PL5-WA-OTH-0281
F1C080575 (2): TRIP BLANK

The MSD recovery for Chloromethane is outside the established QC limits. The RPD is within method acceptance criteria. Chloromethane was not detected above the reporting limit in the associated samples. Sample data is not affected by this excursion and all sample data is included with this narrative.
Affected Samples:
F1C080575 (1): 60162412-SMP-PL5-WA-OTH-0281
F1C080575 (2): TRIP BLANK

The MS/MSD RPD values for Bromomethane, Carbon tetrachloride, Bromoform and trans-1,3-Dichloropropene are not within method acceptance criteria. MS/MSD recoveries for these analytes are within QC limits demonstrating good extraction performance in the sample matrix.
Affected Samples:
F1C080575 (1): 60162412-SMP-PL5-WA-OTH-0281
F1C080575 (2): TRIP BLANK

Gross Alpha/Beta Method 900
Batch: 1067333

The Gross Alpha reporting limit was not met due to a reduction of sample size attributed to the sample's high residual mass. The analytical results are reported.
Affected Samples:
F1C080575 (1): 60162412-SMP-PL5-WA-OTH-0281

There are no other observations or non-conformances associated with the analyses contained in this report.

METHODS SUMMARY

F1C080575

PARAMETER	ANALYTICAL METHOD	PREPARATION METHOD
pH Aqueous	SW846 9040	SW846 9040
Chemical Oxygen Demand	MCAWW 410.4	MCAWW 410.4
Gross Alpha/Beta EPA 900	EPA 900.0 MOD	EPA 900.0
Isotopic Thorium by Alpha Spectroscopy	EML A-01-R MOD	
Isotopic Uranium by Alpha Spectroscopy	EML A-01-R MOD	
Non-Filterable Residue (TSS)	MCAWW 160.2	MCAWW 160.2
Purgeables	CFR136A 624	SW846 5030B
Radium-226 by GFPC	EPA 903.0 MOD	EPA 903.0
Radium-228 by GFPC	EPA 904 MOD	EPA 904
Trace Inductively Coupled Plasma (ICP) Metals	SW846 6010B	

References:

CFR136A "Methods for Organic Chemical Analysis of Municipal and Industrial Wastewater", 40CFR, Part 136, Appendix A, October 26, 1984 and subsequent revisions.

EML "ENVIRONMENTAL MEASUREMENTS LABORATORY PROCEDURES MANUAL" HASL-300 28TH EDITION, VOLUME I and II DEPARTMENT OF ENERGY

EPA "EASTERN ENVIRONMENTAL RADIATION FACILITY RADIOCHEMISTRY PROCEDURES MANUAL" US EPA EPA 520/5-84-006 AUGUST 1984

MCAWW "Methods for Chemical Analysis of Water and Wastes", EPA-600/4-79-020, March 1983 and subsequent revisions.

SW846 "Test Methods for Evaluating Solid Waste, Physical/Chemical Methods", Third Edition, November 1986 and its updates.

SAMPLE SUMMARY

F1C080575

WO #	SAMPLE#	CLIENT SAMPLE ID	SAMPLED DATE	SAMP TIME
MFDAK	001	60162412-SMP-PL5-WA-OTH-0281	03/08/11	13:30
MFDDC	002	TRIP BLANK	03/08/11	

NOTE(S):

- The analytical results of the samples listed above are presented on the following pages.
- All calculations are performed before rounding to avoid round-off errors in calculated results.
- Results noted as "ND" were not detected at or above the stated limit.
- This report must not be reproduced, except in full, without the written approval of the laboratory.
- Results for the following parameters are never reported on a dry weight basis: color, corrosivity, density, flashpoint, ignitability, layers, odor, paint filter test, pH, porosity pressure, reactivity, redox potential, specific gravity, spot tests, solids, solubility, temperature, viscosity, and weight.

AECOM Technical Services Inc.

Client Sample ID: 60162412-SMP-PL5-WA-OTH-0281

GC/MS Volatiles

Lot-Sample #...: F1C080575-001 Work Order #...: MFDAK1AK Matrix.....: WATER
Date Sampled...: 03/08/11 13:30 Date Received..: 03/08/11
Prep Date.....: 03/11/11 Analysis Date..: 03/12/11
Prep Batch #...: 1073120 Analysis Time..: 00:06
Dilution Factor: 1

Method.....: CFR136A 624

PARAMETER	RESULT	REPORTING LIMIT	UNITS
Acrolein	ND	10	ug/L
Acrylonitrile	ND	10	ug/L
Benzene	ND	1.0	ug/L
Bromoform	ND	1.0	ug/L
Bromomethane	ND	2.0	ug/L
Carbon tetrachloride	ND	1.0	ug/L
Chlorobenzene	ND	1.0	ug/L
Chlorodibromomethane	ND	1.0	ug/L
Chloroethane	ND	2.0	ug/L
Chloroform	**1.2**	**1.0**	**ug/L**
Chloromethane	ND	2.0	ug/L
Dichlorobromomethane	**0.31 J**	**1.0**	**ug/L**
1,1-Dichloroethane	ND	1.0	ug/L
1,2-Dichloroethane	ND	1.0	ug/L
1,1-Dichloroethene	ND	1.0	ug/L
1,2-Dichloroethene (total)	ND	2.0	ug/L
1,2-Dichloropropane	ND	1.0	ug/L
cis-1,3-Dichloropropene	ND	1.0	ug/L
trans-1,3-Dichloropropene	ND	1.0	ug/L
Ethylbenzene	ND	1.0	ug/L
Methylene chloride	ND	1.0	ug/L
1,1,2,2-Tetrachloroethane	ND	1.0	ug/L
Tetrachloroethene	ND	1.0	ug/L
Toluene	ND	1.0	ug/L
1,1,1-Trichloroethane	ND	1.0	ug/L
1,1,2-Trichloroethane	ND	1.0	ug/L
Trichloroethene	ND	1.0	ug/L
Vinyl chloride	ND	2.0	ug/L

SURROGATE	PERCENT RECOVERY	RECOVERY LIMITS
1,2-Dichloroethane-d4	90	(62 - 122)
Toluene-d8	107	(73 - 116)
4-Bromofluorobenzene	93	(68 - 118)

NOTE(S):

J Estimated result. Result is less than RL.

AECOM Technical Services Inc.

Client Sample ID: TRIP BLANK

GC/MS Volatiles

Lot-Sample #...: F1C080575-002 Work Order #...: MFDDC1AA Matrix.....: WATER
Date Sampled...: 03/08/11 Date Received..: 03/08/11
Prep Date.....: 03/11/11 Analysis Date..: 03/12/11
Prep Batch #...: 1073120 Analysis Time..: 00:31
Dilution Factor: 1

Method.....: CFR136A 624

PARAMETER	RESULT	REPORTING LIMIT	UNITS
Acrolein	ND	10	ug/L
Acrylonitrile	ND	10	ug/L
Benzene	ND	1.0	ug/L
Bromoform	ND	1.0	ug/L
Bromomethane	ND	2.0	ug/L
Carbon tetrachloride	ND	1.0	ug/L
Chlorobenzene	ND	1.0	ug/L
Chlorodibromomethane	ND	1.0	ug/L
Chloroethane	ND	2.0	ug/L
Chloroform	ND	1.0	ug/L
Chloromethane	ND	2.0	ug/L
Dichlorobromomethane	ND	1.0	ug/L
1,1-Dichloroethane	ND	1.0	ug/L
1,2-Dichloroethane	ND	1.0	ug/L
1,1-Dichloroethene	ND	1.0	ug/L
1,2-Dichloroethene (total)	ND	2.0	ug/L
1,2-Dichloropropane	ND	1.0	ug/L
cis-1,3-Dichloropropene	ND	1.0	ug/L
trans-1,3-Dichloropropene	ND	1.0	ug/L
Ethylbenzene	ND	1.0	ug/L
Methylene chloride	ND	1.0	ug/L
1,1,2,2-Tetrachloroethane	ND	1.0	ug/L
Tetrachloroethene	ND	1.0	ug/L
Toluene	ND	1.0	ug/L
1,1,1-Trichloroethane	ND	1.0	ug/L
1,1,2-Trichloroethane	ND	1.0	ug/L
Trichloroethene	ND	1.0	ug/L
Vinyl chloride	ND	2.0	ug/L

SURROGATE	PERCENT RECOVERY	RECOVERY LIMITS
1,2-Dichloroethane-d4	94	(62 - 122)
Toluene-d8	107	(73 - 116)
4-Bromofluorobenzene	93	(68 - 118)

METHOD BLANK REPORT

GC/MS Volatiles

Client Lot #...: F1C080575 **Work Order #...:** MFLDK1AA **Matrix.....:** WATER
MB Lot-Sample #: F1C140000-120

Prep Date.....: 03/11/11 **Analysis Time..:** 23:41
Analysis Date..: 03/11/11 **Prep Batch #...:** 1073120
Dilution Factor: 1

PARAMETER	RESULT	REPORTING LIMIT	UNITS	METHOD
Acrolein	ND	10	ug/L	CFR136A 624
Acrylonitrile	ND	10	ug/L	CFR136A 624
Benzene	ND	1.0	ug/L	CFR136A 624
Bromoform	ND	1.0	ug/L	CFR136A 624
Bromomethane	ND	2.0	ug/L	CFR136A 624
Carbon tetrachloride	ND	1.0	ug/L	CFR136A 624
Chlorobenzene	ND	1.0	ug/L	CFR136A 624
Chlorodibromomethane	ND	1.0	ug/L	CFR136A 624
Chloroethane	ND	2.0	ug/L	CFR136A 624
Chloroform	ND	1.0	ug/L	CFR136A 624
Chloromethane	ND	2.0	ug/L	CFR136A 624
Dichlorobromomethane	ND	1.0	ug/L	CFR136A 624
1,1-Dichloroethane	ND	1.0	ug/L	CFR136A 624
1,2-Dichloroethane	ND	1.0	ug/L	CFR136A 624
1,1-Dichloroethene	ND	1.0	ug/L	CFR136A 624
1,2-Dichloroethene (total)	ND	2.0	ug/L	CFR136A 624
1,2-Dichloropropane	ND	1.0	ug/L	CFR136A 624
cis-1,3-Dichloropropene	ND	1.0	ug/L	CFR136A 624
trans-1,3-Dichloropropene	ND	1.0	ug/L	CFR136A 624
Ethylbenzene	ND	1.0	ug/L	CFR136A 624
Methylene chloride	ND	1.0	ug/L	CFR136A 624
1,1,2,2-Tetrachloroethane	ND	1.0	ug/L	CFR136A 624
Tetrachloroethene	ND	1.0	ug/L	CFR136A 624
Toluene	ND	1.0	ug/L	CFR136A 624
1,1,1-Trichloroethane	ND	1.0	ug/L	CFR136A 624
1,1,2-Trichloroethane	ND	1.0	ug/L	CFR136A 624
Trichloroethene	ND	1.0	ug/L	CFR136A 624
Vinyl chloride	ND	2.0	ug/L	CFR136A 624

SURROGATE	PERCENT RECOVERY	RECOVERY LIMITS
1,2-Dichloroethane-d4	94	(62 - 122)
Toluene-d8	105	(73 - 116)
4-Bromofluorobenzene	97	(68 - 118)

NOTE(S):

Calculations are performed before rounding to avoid round-off errors in calculated results.

LABORATORY CONTROL SAMPLE EVALUATION REPORT

GC/MS Volatiles

Client Lot #...: F1C080575 Work Order #...: MFLDK1AC-LCS Matrix.....: WATER
LCS Lot-Sample#: F1C140000-120 MFLDK1AD-LCSD
Prep Date.....: 03/11/11 Analysis Date..: 03/11/11
Prep Batch #...: 1073120 Analysis Time..: 14:22
Dilution Factor: 1

PARAMETER	PERCENT RECOVERY	RECOVERY LIMITS	RPD	RPD LIMITS	METHOD
Acrolein	101	(40 - 140)			CFR136A 624
	98	(40 - 140)	3.4	(0-20)	CFR136A 624
Acrylonitrile	133	(67 - 140)			CFR136A 624
	123	(67 - 140)	7.6	(0-20)	CFR136A 624
Benzene	103	(76 - 119)			CFR136A 624
	92	(76 - 119)	11	(0-20)	CFR136A 624
Bromoform	109	(71 - 139)			CFR136A 624
	97	(71 - 139)	12	(0-20)	CFR136A 624
Bromomethane	116	(67 - 140)			CFR136A 624
	120	(67 - 140)	3.4	(0-20)	CFR136A 624
Carbon tetrachloride	142 a	(73 - 140)			CFR136A 624
	134	(73 - 140)	6.2	(0-20)	CFR136A 624
Chlorobenzene	104	(80 - 115)			CFR136A 624
	92	(80 - 115)	13	(0-20)	CFR136A 624
Chlorodibromomethane	118	(74 - 140)			CFR136A 624
	110	(74 - 140)	6.6	(0-20)	CFR136A 624
Chloroethane	80	(36 - 140)			CFR136A 624
	73	(36 - 140)	8.7	(0-20)	CFR136A 624
Chloroform	105	(77 - 121)			CFR136A 624
	97	(77 - 121)	8.2	(0-20)	CFR136A 624
Chloromethane	161 a	(41 - 140)			CFR136A 624
	139	(41 - 140)	15	(0-20)	CFR136A 624
Dichlorobromomethane	104	(72 - 138)			CFR136A 624
	97	(72 - 138)	7.5	(0-20)	CFR136A 624
1,1-Dichloroethane	99	(71 - 124)			CFR136A 624
	91	(71 - 124)	8.2	(0-20)	CFR136A 624
1,2-Dichloroethane	96	(67 - 133)			CFR136A 624
	88	(67 - 133)	8.9	(0-20)	CFR136A 624
1,1-Dichloroethene	127 a	(77 - 120)			CFR136A 624
	111	(77 - 120)	13	(0-20)	CFR136A 624
1,2-Dichloropropane	101	(67 - 137)			CFR136A 624
	93	(67 - 137)	7.6	(0-20)	CFR136A 624
cis-1,3-Dichloropropene	88	(58 - 140)			CFR136A 624
	87	(58 - 140)	0.57	(0-20)	CFR136A 624
trans-1,3-Dichloropropene	83	(61 - 140)			CFR136A 624
	86	(61 - 140)	3.0	(0-20)	CFR136A 624
Ethylbenzene	109	(77 - 123)			CFR136A 624
	95	(77 - 123)	14	(0-20)	CFR136A 624
Methylene chloride	123	(62 - 127)			CFR136A 624
	111	(62 - 127)	11	(0-20)	CFR136A 624

(Continued on next page)

LABORATORY CONTROL SAMPLE EVALUATION REPORT

GC/MS Volatiles

Client Lot #...: F1C080575 Work Order #...: MFLDK1AC-LCS Matrix.....: WATER
LCS Lot-Sample#: F1C140000-120 MFLDK1AD-LCSD

PARAMETER	PERCENT RECOVERY	RECOVERY LIMITS	RPD	RPD LIMITS	METHOD
1,1,2,2-Tetrachloroethane	79	(61 - 128)			CFR136A 624
	68	(61 - 128)	15	(0-20)	CFR136A 624
Tetrachloroethene	139	(67 - 140)			CFR136A 624
	120	(67 - 140)	14	(0-20)	CFR136A 624
Toluene	102	(75 - 120)			CFR136A 624
	88	(75 - 120)	15	(0-20)	CFR136A 624
1,1,1-Trichloroethane	102	(81 - 125)			CFR136A 624
	94	(81 - 125)	7.3	(0-20)	CFR136A 624
1,1,2-Trichloroethane	95	(73 - 126)			CFR136A 624
	86	(73 - 126)	11	(0-20)	CFR136A 624
Trichloroethene	121	(76 - 126)			CFR136A 624
	108	(76 - 126)	11	(0-20)	CFR136A 624
Vinyl chloride	94	(58 - 129)			CFR136A 624
	82	(58 - 129)	14	(0-20)	CFR136A 624

SURROGATE	PERCENT RECOVERY	RECOVERY LIMITS
1,2-Dichloroethane-d4	82	(62 - 126)
	72	(62 - 126)
Toluene-d8	107	(78 - 119)
	90	(78 - 119)
4-Bromofluorobenzene	99	(73 - 115)
	78	(73 - 115)

NOTE(S):

Calculations are performed before rounding to avoid round-off errors in calculated results.

Bold print denotes control parameters

a Spiked analyte recovery is outside stated control limits.

MATRIX SPIKE SAMPLE EVALUATION REPORT

GC/MS Volatiles

Client Lot #...: F1C080575 Work Order #...: MFKGR1CA-MS Matrix.....: WATER
MS Lot-Sample #: F1C110608-001 MFKGR1CC-MSD
Date Sampled...: 03/11/11 14:00 Date Received..: 03/11/11
Prep Date.....: 03/11/11 Analysis Date..: 03/12/11
Prep Batch #...: 1073120 Analysis Time..: 08:50
Dilution Factor: 1

PARAMETER	PERCENT RECOVERY	RECOVERY LIMITS	RPD	RPD LIMITS	METHOD
Acrolein	98	(50 - 150)			CFR136A 624
	99	(50 - 150)	0.53	(0-20)	CFR136A 624
Acrylonitrile	123	(50 - 150)			CFR136A 624
	126	(50 - 150)	2.6	(0-20)	CFR136A 624
Benzene	98	(47 - 150)			CFR136A 624
	101	(47 - 150)	3.0	(0-20)	CFR136A 624
Bromoform	97	(45 - 150)			CFR136A 624
	124 p	(45 - 150)	24	(0-20)	CFR136A 624
Bromomethane	80	(41 - 150)			CFR136A 624
	122 p	(41 - 150)	41	(0-20)	CFR136A 624
Carbon tetrachloride	99	(70 - 140)			CFR136A 624
	121 p	(70 - 140)	21	(0-20)	CFR136A 624
Chlorobenzene	99	(54 - 145)			CFR136A 624
	103	(54 - 145)	3.7	(0-20)	CFR136A 624
Chlorodibromomethane	114	(64 - 148)			CFR136A 624
	138	(64 - 148)	19	(0-20)	CFR136A 624
Chloroethane	71	(28 - 150)			CFR136A 624
	80	(28 - 150)	12	(0-20)	CFR136A 624
Chloroform	97	(51 - 138)			CFR136A 624
	103	(51 - 138)	6.4	(0-20)	CFR136A 624
Chloromethane	137	(33 - 150)			CFR136A 624
	164 a	(33 - 150)	18	(0-20)	CFR136A 624
Dichlorobromomethane	100	(47 - 150)			CFR136A 624
	110	(47 - 150)	9.4	(0-20)	CFR136A 624
1,1-Dichloroethane	94	(59 - 150)			CFR136A 624
	98	(59 - 150)	3.8	(0-20)	CFR136A 624
1,2-Dichloroethane	87	(59 - 143)			CFR136A 624
	91	(59 - 143)	4.5	(0-20)	CFR136A 624
1,1-Dichloroethene	106	(48 - 150)			CFR136A 624
	105	(48 - 150)	1.4	(0-20)	CFR136A 624
1,2-Dichloropropane	95	(56 - 150)			CFR136A 624
	100	(56 - 150)	5.6	(0-20)	CFR136A 624
cis-1,3-Dichloropropene	96	(50 - 150)			CFR136A 624
	109	(50 - 150)	13	(0-20)	CFR136A 624
trans-1,3-Dichloropropene	92	(31 - 150)			CFR136A 624
	120 p	(31 - 150)	26	(0-20)	CFR136A 624
Ethylbenzene	106	(53 - 150)			CFR136A 624
	109	(53 - 150)	3.6	(0-20)	CFR136A 624
Methylene chloride	114	(38 - 150)			CFR136A 624
	108	(38 - 150)	5.7	(0-20)	CFR136A 624

(Continued on next page)

MATRIX SPIKE SAMPLE EVALUATION REPORT

GC/MS Volatiles

Client Lot #...: F1C080575 Work Order #...: MFKGR1CA-MS Matrix.....: WATER
MS Lot-Sample #: F1C110608-001 MFKGR1CC-MSD

PARAMETER	PERCENT RECOVERY	RECOVERY LIMITS	RPD	RPD LIMITS	METHOD
1,1,2,2-Tetrachloroethane	75	(46 - 150)			CFR136A 624
	80	(46 - 150)	6.3	(0-20)	CFR136A 624
Tetrachloroethene	125	(65 - 148)			CFR136A 624
	134	(65 - 148)	6.9	(0-20)	CFR136A 624
Toluene	96	(52 - 150)			CFR136A 624
	97	(52 - 150)	1.2	(0-20)	CFR136A 624
1,1,1-Trichloroethane	104	(54 - 150)			CFR136A 624
	113	(54 - 150)	7.7	(0-20)	CFR136A 624
1,1,2-Trichloroethane	95	(61 - 137)			CFR136A 624
	99	(61 - 137)	3.8	(0-20)	CFR136A 624
Trichloroethene	107	(71 - 150)			CFR136A 624
	117	(71 - 150)	8.9	(0-20)	CFR136A 624
Vinyl chloride	86	(33 - 150)			CFR136A 624
	92	(33 - 150)	6.9	(0-20)	CFR136A 624

SURROGATE	PERCENT RECOVERY	RECOVERY LIMITS
1,2-Dichloroethane-d4	69	(62 - 122)
	84	(62 - 122)
Toluene-d8	88	(73 - 116)
	87	(73 - 116)
4-Bromofluorobenzene	81	(68 - 118)
	84	(68 - 118)

NOTE(S):

Calculations are performed before rounding to avoid round-off errors in calculated results.

Bold print denotes control parameters

p Relative percent difference (RPD) is outside stated control limits.

a Spiked analyte recovery is outside stated control limits.

AECOM Technical Services Inc.

Client Sample ID: 60162412-SMP-PL5-WA-OTH-0281

TOTAL Metals

Lot-Sample #...: F1C080575-001 Matrix.....: WATER
Date Sampled...: 03/08/11 13:30 Date Received..: 03/08/11

PARAMETER	RESULT	REPORTING LIMIT	UNITS	METHOD	PREPARATION-ANALYSIS DATE	WORK ORDER #
Prep Batch #...: 1068087						
Cadmium	ND	5	ug/L	SW846 6010B	03/09-03/10/11	MFDAK1AC
		Dilution Factor: 1		Analysis Time..: 15:33		
Chromium	ND	10	ug/L	SW846 6010B	03/09-03/10/11	MFDAK1AD
		Dilution Factor: 1		Analysis Time..: 15:33		
Copper	ND	25	ug/L	SW846 6010B	03/09-03/10/11	MFDAK1AE
		Dilution Factor: 1		Analysis Time..: 15:33		
Iron	203	100	ug/L	SW846 6010B	03/09-03/10/11	MFDAK1AF
		Dilution Factor: 1		Analysis Time..: 15:33		
Nickel	16.5 B	40	ug/L	SW846 6010B	03/09-03/10/11	MFDAK1AG
		Dilution Factor: 1		Analysis Time..: 15:33		
Lead	ND	10	ug/L	SW846 6010B	03/09-03/10/11	MFDAK1AH
		Dilution Factor: 1		Analysis Time..: 15:33		
Zinc	106	20	ug/L	SW846 6010B	03/09-03/10/11	MFDAK1AJ
		Dilution Factor: 1		Analysis Time..: 15:33		

NOTE(S):

B Estimated result. Result is less than RL.

METHOD BLANK REPORT

TOTAL Metals

Client Lot #...: F1C080575 Matrix.....: WATER

PARAMETER	RESULT	REPORTING LIMIT	UNITS	METHOD	PREPARATION-ANALYSIS DATE	WORK ORDER #
MB Lot-Sample #: F1C090000-087 Prep Batch #...: 1068087						
Cadmium	ND	5	ug/L	SW846 6010B	03/09-03/10/11	MFDT61AA
		Dilution Factor: 1				
		Analysis Time..: 15:18				
Chromium	ND	10	ug/L	SW846 6010B	03/09-03/10/11	MFDT61AC
		Dilution Factor: 1				
		Analysis Time..: 15:18				
Copper	ND	25	ug/L	SW846 6010B	03/09-03/10/11	MFDT61AD
		Dilution Factor: 1				
		Analysis Time..: 15:18				
Iron	ND	100	ug/L	SW846 6010B	03/09-03/10/11	MFDT61AE
		Dilution Factor: 1				
		Analysis Time..: 15:18				
Lead	ND	10	ug/L	SW846 6010B	03/09-03/10/11	MFDT61AG
		Dilution Factor: 1				
		Analysis Time..: 15:18				
Nickel	ND	40	ug/L	SW846 6010B	03/09-03/10/11	MFDT61AF
		Dilution Factor: 1				
		Analysis Time..: 15:18				
Zinc	ND	20	ug/L	SW846 6010B	03/09-03/10/11	MFDT61AH
		Dilution Factor: 1				
		Analysis Time..: 15:18				

NOTE(S):

Calculations are performed before rounding to avoid round-off errors in calculated results.

LABORATORY CONTROL SAMPLE EVALUATION REPORT

TOTAL Metals

Client Lot #...: F1C080575 **Matrix.....:** WATER

PARAMETER	PERCENT RECOVERY	RECOVERY LIMITS	METHOD	PREPARATION-ANALYSIS DATE	WORK ORDER #
LCS Lot-Sample#: F1C090000-087 **Prep Batch #...:** 1068087					
Cadmium	105	(80 - 120)	SW846 6010B	03/09-03/10/11	MFDT61AJ
		Dilution Factor: 1	Analysis Time..: 15:26		
Chromium	100	(80 - 120)	SW846 6010B	03/09-03/10/11	MFDT61AK
		Dilution Factor: 1	Analysis Time..: 15:26		
Copper	99	(80 - 120)	SW846 6010B	03/09-03/10/11	MFDT61AL
		Dilution Factor: 1	Analysis Time..: 15:26		
Iron	108	(80 - 120)	SW846 6010B	03/09-03/10/11	MFDT61AM
		Dilution Factor: 1	Analysis Time..: 15:26		
Nickel	101	(80 - 120)	SW846 6010B	03/09-03/10/11	MFDT61AN
		Dilution Factor: 1	Analysis Time..: 15:26		
Lead	100	(80 - 120)	SW846 6010B	03/09-03/10/11	MFDT61AP
		Dilution Factor: 1	Analysis Time..: 15:26		
Zinc	111	(80 - 120)	SW846 6010B	03/09-03/10/11	MFDT61AQ
		Dilution Factor: 1	Analysis Time..: 15:26		

NOTE(S):

Calculations are performed before rounding to avoid round-off errors in calculated results.

MATRIX SPIKE SAMPLE EVALUATION REPORT

TOTAL Metals

Client Lot #...: F1C080575 **Matrix.....:** WATER
Date Sampled...: 03/08/11 13:30 **Date Received..:** 03/08/11

PARAMETER	PERCENT RECOVERY	RECOVERY LIMITS	RPD	RPD LIMITS	METHOD	PREPARATION-ANALYSIS DATE	WORK ORDER #
MS Lot-Sample #: F1C080575-001 **Prep Batch #...:** 1068087							
Cadmium	98	(75 - 125)			SW846 6010B	03/09-03/10/11	MFDAK1A5
	98	(75 - 125)	0.56	(0-20)	SW846 6010B	03/09-03/10/11	MFDAK1A6
		Dilution Factor: 1					
		Analysis Time..: 15:48					
Chromium	94	(75 - 125)			SW846 6010B	03/09-03/10/11	MFDAK1A7
	94	(75 - 125)	0.03	(0-20)	SW846 6010B	03/09-03/10/11	MFDAK1A8
		Dilution Factor: 1					
		Analysis Time..: 15:48					
Copper	96	(75 - 125)			SW846 6010B	03/09-03/10/11	MFDAK1A9
	95	(75 - 125)	0.19	(0-20)	SW846 6010B	03/09-03/10/11	MFDAK1CA
		Dilution Factor: 1					
		Analysis Time..: 15:48					
Iron	101	(75 - 125)			SW846 6010B	03/09-03/10/11	MFDAK1CC
	101	(75 - 125)	0.10	(0-20)	SW846 6010B	03/09-03/10/11	MFDAK1CD
		Dilution Factor: 1					
		Analysis Time..: 15:48					
Lead	93	(75 - 125)			SW846 6010B	03/09-03/10/11	MFDAK1CG
	93	(75 - 125)	0.0	(0-20)	SW846 6010B	03/09-03/10/11	MFDAK1CH
		Dilution Factor: 1					
		Analysis Time..: 15:48					
Nickel	93	(75 - 125)			SW846 6010B	03/09-03/10/11	MFDAK1CE
	94	(75 - 125)	0.49	(0-20)	SW846 6010B	03/09-03/10/11	MFDAK1CF
		Dilution Factor: 1					
		Analysis Time..: 15:48					
Zinc	105	(75 - 125)			SW846 6010B	03/09-03/10/11	MFDAK1CJ
	106	(75 - 125)	0.56	(0-20)	SW846 6010B	03/09-03/10/11	MFDAK1CK
		Dilution Factor: 1					
		Analysis Time..: 15:48					

NOTE(S):

Calculations are performed before rounding to avoid round-off errors in calculated results.

AECOM Technical Services Inc.

Client Sample ID: 60162412-SMP-PL5-WA-OTH-0281

General Chemistry

Lot-Sample #...: F1C080575-001 Work Order #...: MFDAK Matrix.....: WATER
Date Sampled...: 03/08/11 13:30 Date Received..: 03/08/11

PARAMETER	RESULT	RL	UNITS	METHOD	PREPARATION-ANALYSIS DATE	PREP BATCH #
pH (liquid)	6.6	0.10	No Units	SW846 9040	03/08/11	1068110
		Dilution Factor: 1		Analysis Time..: 20:44		
COD	75.0	20.0	mg/L	MCAWW 410.4	03/15/11	1073169
		Dilution Factor: 1		Analysis Time..: 00:00		
Total Suspended Solids	ND	4.0	mg/L	MCAWW 160.2	03/11-03/14/11	1068153
		Dilution Factor: 1		Analysis Time..: 00:00		

METHOD BLANK REPORT

General Chemistry

Client Lot #...: F1C080575 Matrix.....: WATER

PARAMETER	RESULT	REPORTING LIMIT	UNITS	METHOD	PREPARATION-ANALYSIS DATE	PREP BATCH #
COD		Work Order #: MFNGG1AA		MB Lot-Sample #:	F1C140000-169	
	ND	20.0	mg/L	MCAWW 410.4	03/15/11	1073169
		Dilution Factor: 1				
		Analysis Time..: 00:00				
Total Suspended Solids		Work Order #: MFJ851AA		MB Lot-Sample #:	F1C090000-153	
	ND	4.0	mg/L	MCAWW 160.2	03/11-03/14/11	1068153
		Dilution Factor: 1				
		Analysis Time..: 00:00				

NOTE(S):

Calculations are performed before rounding to avoid round-off errors in calculated results.

LABORATORY CONTROL SAMPLE EVALUATION REPORT

General Chemistry

Client Lot #...: F1C080575 Matrix.....: WATER

PARAMETER	PERCENT RECOVERY	RECOVERY LIMITS	METHOD	PREPARATION-ANALYSIS DATE	PREP BATCH #
pH (liquid)		Work Order #: MFH711AA	LCS Lot-Sample#: F1C090000-110		
	100	(99 - 101)	SW846 9040	03/08/11	1068110
		Dilution Factor: 1	Analysis Time..: 20:32		
COD		Work Order #: MFNGG1AC	LCS Lot-Sample#: F1C140000-169		
	102	(90 - 110)	MCAWW 410.4	03/15/11	1073169
		Dilution Factor: 1	Analysis Time..: 00:00		
Total Suspended Solids		Work Order #: MFJ851AC	LCS Lot-Sample#: F1C090000-153		
	99	(79 - 122)	MCAWW 160.2	03/11-03/14/11	1068153
		Dilution Factor: 1	Analysis Time..: 00:00		

NOTE(S):

Calculations are performed before rounding to avoid round-off errors in calculated results.

MATRIX SPIKE SAMPLE EVALUATION REPORT

General Chemistry

Client Lot #...: F1C080575 **Matrix.....:** WATER
Date Sampled...: 03/11/11 14:00 **Date Received..:** 03/11/11

PARAMETER	PERCENT RECOVERY	RECOVERY LIMITS	METHOD	PREPARATION-ANALYSIS DATE	PREP BATCH #
COD		Work Order #...: MFKGR1CJ		MS Lot-Sample #: F1C110608-001	
	91	(90 - 110)	MCAWW 410.4	03/15/11	1073169
		Dilution Factor: 1	Analysis Time..: 00:00		

NOTE(S):

Calculations are performed before rounding to avoid round-off errors in calculated results.

SAMPLE DUPLICATE EVALUATION REPORT

General Chemistry

Client Lot #...: F1C080575 **Work Order #...:** MFDAK-SMP MFDAK-DUP **Matrix.....:** WATER

Date Sampled...: 03/08/11 13:30 **Date Received..:** 03/08/11

PARAM	RESULT	DUPLICATE RESULT	UNITS	RPD	RPD LIMIT	METHOD	PREPARATION-ANALYSIS DATE	PREP BATCH #
pH (liquid)						SD Lot-Sample #:	F1C080575-001	
	6.6	6.6	No Units	0.15	(0-0.0)	SW846 9040	03/08/11	1068110

Dilution Factor: 1 Analysis Time..: 20:44

SAMPLE DUPLICATE EVALUATION REPORT

General Chemistry

Client Lot #...: F1C080575 Work Order #...: MFC78-SMP Matrix.....: WATER
MFC78-DUP
Date Sampled...: 03/08/11 13:47 Date Received..: 03/08/11

PARAM	RESULT	DUPLICATE RESULT	UNITS	RPD	RPD LIMIT	METHOD	PREPARATION-ANALYSIS DATE	PREP BATCH #
Total Suspended Solids						SD Lot-Sample #:	F1C080563-001	
	18.0	19.0	mg/L	5.4	(0-20)	MCAWW 160.2	03/11-03/14/11	1068153

Dilution Factor: 1 Analysis Time..: 00:00

SAMPLE DUPLICATE EVALUATION REPORT

General Chemistry

Client Lot #...: F1C080575 **Work Order #...:** MFKGR-SMP MFKGR-DUP **Matrix.....:** WATER

Date Sampled...: 03/11/11 14:00 **Date Received..:** 03/11/11

PARAM	RESULT	DUPLICATE RESULT	UNITS	RPD	RPD LIMIT	METHOD	PREPARATION-ANALYSIS DATE	PREP BATCH #
COD						SD Lot-Sample #:	F1C110608-001	
	46.0	49.0	mg/L	6.3	(0-20)	MCAWW 410.4	03/15/11	1073169

Dilution Factor: 1 Analysis Time..: 00:00

AECOM Technical Services Inc.

Client Sample ID: 60162412-SMP-PL5-WA-OTH-0281

Radiochemistry

Lab Sample ID: F1C080575-001
Work Order: MFDAK
Matrix: WATER

Date Collected: 03/08/11 1330
Date Received: 03/08/11 1550

Parameter	Result	Qual	Total Uncert. (2 σ+/-)	RL	mdc	Prep Date	Analysis Date
Iso THORIUM (SHORT CT) DOE A-01-R MOD				pCi/L		Batch # 1068284	Yld % 79
Thorium 228	0.01	U	0.12	1.00	0.26	03/09/11	03/10/11
Thorium 230	0.04	U	0.11	1.00	0.20	03/09/11	03/10/11
Thorium 232	0.036	U	0.072	1.00	0.13	03/09/11	03/10/11
Iso URANIUM (SHORT CT) DOE A-01-R MOD				pCi/L		Batch # 1068287	Yld % 78
Uranium 234	**0.16**		0.14	1.00	0.16	03/09/11	03/10/11
Uranium 235/236	0.007	U	0.064	1.00	0.17	03/09/11	03/10/11
Uranium 238	0.019	U	0.049	1.00	0.10	03/09/11	03/10/11
Gross Alpha/Beta EPA 900				pCi/L		Batch # 1067333	Yld %
Gross Alpha	7.0	U	5.4	3.0	7.6	03/08/11	03/12/11
Gross Beta	**11.4**		3.0	4.0	3.2	03/08/11	03/12/11
Radium 226 by EPA 903.0 MOD				pCi/L		Batch # 1068050	Yld % 101
Radium (226)	**3.72**		0.53	1.00	0.18	03/09/11	03/14/11
Radium 228 by GFPC EPA 904 MOD				pCi/L		Batch # 1068051	Yld % 91
Radium 228	**1.08**		0.30	1.00	0.36	03/09/11	03/14/11

NOTE(S)

Data are incomplete without the case narrative.

MDC is determined by instrument performance only.
Bold results are greater than the MDC.

U Result is less than the sample detection limit.

METHOD BLANK REPORT

Radiochemistry

Client Lot ID: F1C080575
Matrix: WATER

Parameter	Result	Qual	Total Uncert. (2 σ+/-)	RL	MDC		Prep Date	Analysis Date	Lab Sample ID
Gross Alpha/Beta EPA 900			pCi/L	Batch #	1067333	Yld %			F1C080000-333B
Gross Alpha	0.39	U	0.47	3.00	0.74		03/08/11	03/12/11	
Gross Beta	0.24	U	0.58	4.00	0.98		03/08/11	03/12/11	
Radium 226 by EPA 903.0 MOD			pCi/L	Batch #	1068050	Yld %	103		F1C090000-050B
Radium (226)	0.13	U	0.11	1.00	0.16		03/09/11	03/14/11	
Radium 228 by GFPC EPA 904 MOD			pCi/L	Batch #	1068051	Yld %	93		F1C090000-051B
Radium 228	-0.08	U	0.16	1.00	0.30		03/09/11	03/14/11	
Iso URANIUM (SHORT CT) DOE A-01-R MOD			pCi/L	Batch #	1068287	Yld %	85		F1C090000-287B
Uranium 234	0.022	U	0.044	1.00	0.059		03/09/11	03/10/11	
Uranium 235/236	-0.005	U	0.010	1.00	0.12		03/09/11	03/10/11	
Uranium 238	0.039	U	0.062	1.00	0.093		03/09/11	03/10/11	
Iso THORIUM (SHORT CT) DOE A-01-R MOD			pCi/L	Batch #	1068284	Yld %	85		F1C090000-284B
Thorium 228	0.031	U	0.062	1.00	0.12		03/09/11	03/10/11	
Thorium 230	0.060	U	0.075	1.00	0.091		03/09/11	03/10/11	
Thorium 232	-0.0022	U	0.0059	1.00	0.082		03/09/11	03/10/11	

NOTE(S)

Data are incomplete without the case narrative.

MDC is determined using instrument performance only
Bold results are greater than the MDC.

U Result is less than the sample detection limit.

Laboratory Control Sample Report

Radiochemistry

Client Lot ID: F1C080575
Matrix: WATER

Parameter	Spike Amount	Result		Total Uncert. (2 σ+/-)	MDC	% Yld	% Rec		Lab Sample ID / QC Control Limits
Gross Alpha/Beta EPA 900			pCi/L		900.0 MOD				F1C080000-333C
Gross Alpha	49.4	52.0		5.8	1.2		105		(83 - 128)
Gross Beta	66.3	66.4		5.6	0.9		100		(90 - 115)
	Batch #:	1067333			Analysis Date:	03/12/11			
Radium 226 by EPA 903.0 MOD			pCi/L		903.0 MOD				F1C090000-050C
Radium (226)	11.3	15.4	a	1.5	0.1	102	136	a	(62 - 136)
	Batch #:	1068050			Analysis Date:	03/14/11			
Radium 228 by GFPC EPA 904 MOD			pCi/L		904 MOD				F1C090000-051C
Radium 228	5.66	5.17		0.63	0.34	92	91		(69 - 140)
	Batch #:	1068051			Analysis Date:	03/14/11			
Iso THORIUM (SHORT CT) DOE A-01-R MOD			pCi/L		A-01-R MOD				F1C090000-284C
Thorium 230	9.49	9.0		1.2	0.1	76	94		(79 - 122)
	Batch #:	1068284			Analysis Date:	03/10/11			
Iso URANIUM (SHORT CT) DOE A-01-R MOD			pCi/L		A-01-R MOD				F1C090000-287C
Uranium 234	13.1	15.2		1.8	0.2	74	117		(83 - 130)
Uranium 238	13.6	15.5		1.8	0.2	74	114		(86 - 128)
	Batch #:	1068287			Analysis Date:	03/10/11			

NOTE(S)

MDC is determined by instrument performance only
Calculations are performed before rounding to avoid round-off error in calculated results

a Spiked analyte outside of stated QC limits.

MATRIX SPIKE REPORT

Radiochemistry

Client Lot Id: F1C080575 Date Sampled: 03/08/11
Matrix: WATER Date Received: 03/08/11

Parameter	Spike Amount	Spike Result	Total Uncert. (2σ +/-)	Spike Yld.	Sample Result	Total Uncert. (2 σ +/-)	QC Sample ID %YLD	%REC	QC Control Limits
Gross Alpha/Beta EPA 900			pCi/L		900.0 MOD			F1C080575-001	
Gross Beta	233	241	21		11.4	3.0		99	(51-150)
	Batch #:	1067333		Analysis Date:		03/12/11			
Gross Alpha/Beta EPA 900			pCi/L		900.0 MOD			F1C080575-001	
Gross Alpha	173	234	29		7.0	5.4		131	(34-150)
	Batch #:	1067333		Analysis Date:		03/12/11			

NOTE(S)

Data are incomplete without the case narrative.

Calculations are performed before rounding to avoid round-off errors in calculated results.

DUPLICATE EVALUATION REPORT

Radiochemistry

Client Lot ID: F1C080575
Matrix: WATER

Date Sampled: 03/08/11
Date Received: 03/08/11

Parameter	SAMPLE Result		Total Uncert. (2σ+/-)	% Yld	DUPLICATE Result		Total Uncert. (2 σ+/-)	% Yld	QC Sample ID Precision	
Radium 226 by EPA 903.0 MOD				pCi/L	903.0 MOD				F1C080575-001	
Radium (226)	3.72		0.53	101	3.39		0.51	98	9	%RPD
	Batch #:		1068050	(Sample)	1068050		(Duplicate)			
Radium 228 by GFPC EPA 904 MOD				pCi/L	904 MOD				F1C080575-001	
Radium 228	1.08		0.30	91	0.87		0.27	89	22	%RPD
	Batch #:		1068051	(Sample)	1068051		(Duplicate)			
Gross Alpha/Beta EPA 900				pCi/L	900.0 MOD				F1C080575-001	
Gross Alpha	7.0	U	5.4		9.7		5.4		33	%RPD
Gross Beta	11.4		3.0		8.1		2.6		34	%RPD
	Batch #:		1067333	(Sample)	1067333		(Duplicate)			
Iso THORIUM (SHORT CT) DOE A-01-R MOD				pCi/L	A-01-R MOD				F1C080575-001	
Thorium 228	0.01	U	0.12	79	-0.023	U	0.074	77	719	%RPD
Thorium 230	0.04	U	0.11	79	0.10	U	0.11	77	81	%RPD
Thorium 232	0.036	U	0.072	79	0.019	U	0.047	77	62	%RPD
	Batch #:		1068284	(Sample)	1068284		(Duplicate)			

NOTE(S)

Data are incomplete without the case narrative.
Calculations are performed before rounding to avoid round-off error in calculated results

U Result is less than the sample detection limit.

F1C080575 CLIENT ANALYSIS SUMMARY

Storage Loc: R198,3-63,V8

Project Manager: JA | Quote #: 87754 | SDG: F1C080575

Date Received: 2011-03-08

Project: | Mallinckrodt St. Louis Plant

Analytical Due Date: 2011-03-14

PO#: 10372ACM | Report to: Mark Tepperman

RUSH

Report Due Date: 2011-03-15

Client: 404224 AECOM Technical Services Inc.

Report Type: D Expanded Deliverable

#SMPS in LOT: 2 | EDD Code: 00

SAMPLE LOGIN: enter lot # into SDG field. Gamma Spec is as received for 6 BD TAT. Gamma Ra226, Iso U and Iso Th will be logged when initial count is complete.
Log ZHE EXTRACTION line item for TCLP VOA. Log TCLP EXTRACTION line item for TCLP analyses. RAD: initial Gamma Spec counted as received. When complete dry/grind and prep for Gamma Ra226,TAR,Iso U and Iso Th. GAMMA SPEC. SHOULD BE COUNTED IN CLIENTS 500ML MARINELLI. RA226/228 - NO INGROWTH REQUIRED!!!
All depts.: standard QC required

SAMPLE #	CLIENT SAMPLE ID	Site ID	Client Matrix	DATE/TIME SAMPLED	WORKORDER	
1	60162412-SMP-PL5-WA-OTH-028			2011-03-08 / 1330	MFDAK	WATER

SAMPLE COMMENTS: ***LIMITED VOLUME DO NOT CONSUME***

	CR	QM	SW846	6010B	WATER, ICP Metals	GJ	METALS, TOTAL - 2% HCL	01	STANDARD TEST SET	PROT: M	WRK LOC	06		
	CU	QM	SW846	6010B	WATER, ICP Metals	GJ	METALS, TOTAL - 2% HCL	01	STANDARD TEST SET	PROT: M	WRK LOC	06		
	FE	QM	SW846	6010B	WATER, ICP Metals	GJ	METALS, TOTAL - 2% HCL	01	STANDARD TEST SET	PROT: M	WRK LOC	06		
	NI	QM	SW846	6010B	WATER, ICP Metals	GJ	METALS, TOTAL - 2% HCL	01	STANDARD TEST SET	PROT: M	WRK LOC	06		
	PB	QM	SW846	6010B	WATER, ICP Metals	GJ	METALS, TOTAL - 2% HCL	01	STANDARD TEST SET	PROT: M	WRK LOC	06		
	ZN	QM	SW846	6010B	WATER, ICP Metals	GJ	METALS, TOTAL - 2% HCL	01	STANDARD TEST SET	PROT: M	WRK LOC	06		
	CD	QM	SW846	6010B	WATER, ICP Metals	GJ	METALS, TOTAL - 2% HCL	01	STANDARD TEST SET	PROT: M	WRK LOC	06		
	XX	DN	CFR13 8A	624	WATER, 624, VOA	25	PURGE AND TRAP - 25 mL purge (Waters)	01	STANDARD TEST SET	PROT: O	WRK LOC	06	TIC: N	
	XX	ZZ	NONE	NONE	WATER, RAD SCREEN	88	NO SAMPLE PREPARATION PERFORMED / DIRECT	01	STANDARD TEST SET	PROT: A	WRK LOC	06		
	XX	2I	EML	A-01-R MOD	WATER, Iso URANIUM (SHORT CT)	J2	Extraction Chromatography - Sequential Actinides	01	STANDARD TEST SET	PROT: R	WRK LOC	06		
	XX	2K	EML	A-01-R MOD	WATER, Iso THORIUM (SHORT CT)	J2	Extraction Chromatography - Sequential Actinides	01	STANDARD TEST SET	PROT: R	WRK LOC	06		
	XX	Y9	EPA	900.0 MOD	WATER, Gross Alpha/Beta	FR	Evaporative Preparation, Total	01	STANDARD TEST SET	PROT: R	WRK LOC	06		
	XX	Z4	EPA	904 MOD	WATER, Radium 228	G2	Precipitate, Separation - 21 day Ingrowth	01	STANDARD TEST SET	PROT: R	WRK LOC	06		
	XX	ZY	EPA	903.0 MOD	WATER, Radium 226	G2	Precipitate, Separation - 21 day Ingrowth	01	STANDARD TEST SET	PROT: R	WRK LOC	06		
	XX	AL	MCAW W	160.2	WATER, 160.2, TSS	88	NO SAMPLE PREPARATION PERFORMED / DIRECT	01	STANDARD TEST SET	PROT: W	WRK LOC	06		
	XX	FJ	SW846	9040	WATER, 9040, pH	88	NO SAMPLE PREPARATION PERFORMED / DIRECT	01	STANDARD TEST SET	PROT: W	WRK LOC	06		
	XX	VO	MCAW W	410.4	WATER, 410.4, COD	21	DIGESTION, NON-METAL/INORGANICS	01	STANDARD TEST SET	PROT: W	WRK LOC	06		
D	NI	QM	SW846	6010B	WATER, ICP Metals	GJ	METALS, TOTAL - 2% HCL	01	STANDARD TEST SET	PROT: M	WRK LOC	06		
D	CD	QM	SW846	6010B	WATER, ICP Metals	GJ	METALS, TOTAL - 2% HCL	01	STANDARD TEST SET	PROT: M	WRK LOC	06		
D	CR	QM	SW846	6010B	WATER, ICP Metals	GJ	METALS, TOTAL - 2% HCL	01	STANDARD TEST SET	PROT: M	WRK LOC	06		
D	PB	QM	SW846	6010B	WATER, ICP Metals	GJ	METALS, TOTAL - 2% HCL	01	STANDARD TEST SET	PROT: M	WRK LOC	06		
D	ZN	QM	SW846	6010B	WATER, ICP Metals	GJ	METALS, TOTAL - 2% HCL	01	STANDARD TEST SET	PROT: M	WRK LOC	06		
D	FE	QM	SW846	6010B	WATER, ICP Metals	GJ	METALS, TOTAL - 2% HCL	01	STANDARD TEST SET	PROT: M	WRK LOC	06		
D	CU	QM	SW846	6010B	WATER, ICP Metals	GJ	METALS, TOTAL - 2% HCL	01	STANDARD TEST SET	PROT: M	WRK LOC	06		
S	PB	QM	SW846	6010B	WATER, ICP Metals	GJ	METALS, TOTAL - 2% HCL	01	STANDARD TEST SET	PROT: M	WRK LOC	06		
S	ZN	QM	SW846	6010B	WATER, ICP Metals	GJ	METALS, TOTAL - 2% HCL	01	STANDARD TEST SET	PROT: M	WRK LOC	06		
S	CD	QM	SW846	6010B	WATER, ICP Metals	GJ	METALS, TOTAL - 2% HCL	01	STANDARD TEST SET	PROT: M	WRK LOC	06		
S	CR	QM	SW846	6010B	WATER, ICP Metals	GJ	METALS, TOTAL - 2% HCL	01	STANDARD TEST SET	PROT: M	WRK LOC	06		
S	CU	QM	SW846	6010B	WATER, ICP Metals	GJ	METALS, TOTAL - 2% HCL	01	STANDARD TEST SET	PROT: M	WRK LOC	06		
S	FE	QM	SW846	6010B	WATER, ICP Metals	GJ	METALS, TOTAL - 2% HCL	01	STANDARD TEST SET	PROT: M	WRK LOC	06		
S	NI	QM	SW846	6010B	WATER, ICP Metals	GJ	METALS, TOTAL - 2% HCL	01	STANDARD TEST SET	PROT: M	WRK LOC	06		
S	XX	Y9	EPA	900.0 MOD	WATER, Gross Alpha/Beta	FR	Evaporative Preparation, Total	01	STANDARD TEST SET	PROT: R	WRK LOC	06		
S	XX	Y9	EPA	900.0 MOD	WATER, Gross Alpha/Beta	FR	Evaporative Preparation, Total	01	STANDARD TEST SET	PROT: R	WRK LOC	06		
X	XX	2I	EML	A-01-R MOD	WATER, Iso URANIUM (SHORT CT)	J2	Extraction Chromatography - Sequential Actinides	01	STANDARD TEST SET	PROT: R	WRK LOC	06		

F1C080575

CLIENT ANALYSIS SUMMARY

Storage Loc: R198,3-63,V8

Date Received: 2011-03-08

Analytical Due Date: 2011-03-14

Report Due Date: 2011-03-15

Report Type: D Expanded Deliverable

EDD Code: 00

Project Manager: JA

Quote #: 67754 SDG: F1C080575

Project:

Mallinckrodt St. Louis Plant

PO#: 10372ACM

Report to: Mark Tepperman

RUSH

Client: 404224 AECOM Technical Services Inc.

#SMPS In LOT: 2

SAMPLE LOGIN: enter lot # into SDG field. Gamma Spec is as received for 5 BD TAT. Gamma Ra226, Iso U and Iso Th will be logged when initial count is complete.
Log ZHE EXTRACTION line item for TCLP VOA. Log TCLP EXTRACTION line item for TCLP analyses. RAD: initial Gamma Spec counted as received. When complete dry/grind and prep for Gamma Ra226,TAR,Iso U and Iso Th. GAMMA SPEC. SHOULD BE COUNTED IN CLIENTS 500ML MARINELLI. RA226/228 - NO INGROWTH REQUIRED!!!
All depts.: standard QC required

X	XX	2I	EML	A-01-R MOD	WATER, Iso URANIUM (SHORT CT)	J2	Extraction Chromatography - Sequential Actinides	01	STANDARD TEST SET	PROT: R	WRK LOC	06	
X	XX	2K	EML	A-01-R MOD	WATER, Iso THORIUM (SHORT CT)	J2	Extraction Chromatography - Sequential Actinides	01	STANDARD TEST SET	PROT: R	WRK LOC	06	
X	XX	2K	EML	A-01-R MOD	WATER, Iso THORIUM (SHORT CT)	J2	Extraction Chromatography - Sequential Actinides	01	STANDARD TEST SET	PROT: R	WRK LOC	06	
X	XX	Y9	EPA	900.0 MOD	WATER, Gross Alpha/Beta	FR	Evaporative Preparation, Total	01	STANDARD TEST SET	PROT: R	WRK LOC	06	
X	XX	Z4	EPA	904 MOD	WATER, Radium 228	G2	Precipitate, Separation - 21 day Ingrowth	01	STANDARD TEST SET	PROT: R	WRK LOC	06	
X	XX	ZY	EPA	903.0 MOD	WATER, Radium 226	G2	Precipitate, Separation - 21 day Ingrowth	01	STANDARD TEST SET	PROT: R	WRK LOC	06	

SAMPLE #	CLIENT SAMPLE ID	Site ID	Client Matrix	DATE/TIME SAMPLED	WORKORDER	
2	TRIP BLANK			2011-03-08 / 0	MFDDC	WATER

SAMPLE COMMENTS:

XX	DN	CFR13 8A	624	WATER, 624, VOA	25	PURGE AND TRAP - 25 mL purge (Waters)	01	STANDARD TEST SET	PROT: O	WRK LOC	06	TIC: N

St. Louis
13715 Rider Trail North
Earth City, MO 63045
phone 314.298.8566 fax 314.298.8757

Chain of Custody Record

TestAmerica
THE LEADER IN ENVIRONMENTAL TESTING

TestAmerica Laboratories, Inc.

Client Contact	Project Manager: Ed Paiser	Site Contact: Casey Knuteson	Date: 03/08/11	COC No: 60162412-SMP-PL5-WA-OTH-0281
AECOM	Tel/Fax: (618)444-5535	Lab Contact: Jayna Arnold	Carrier: Test America	1 of 1 COCs
Address 8005 Outer Circle RD	Analysis Turnaround Time			Job No. 60162412
City/State/Zip Brooks City Base, TX 78235	Calendar (C) or Work Days (W) C			
(618)444-5535 Phone	TAT if different from Below			SDG No.
none FAX	☐ 2 weeks			
Project Name: Mallinckrodt C-T Decommissioning	■ 1 week			
Site: St. Louis Plant	☐ 2 days			
P O # 10372ACM	☐ 1 day			

Sample Identification	Sample Date	Sample Time	Sample Type	Matrix	# of Cont.	Filtered Sample	pH	TSS	COD	ICP Metals (Cd, Cr, Co, Fe, Pb, Ni, Zn)	Volatile Organics (EPA Method 624)	Gross Alpha/Beta	Isotopic Uranium (Alpha Spectrometry)	Radium-226 (GFPC, no decay/ingrowth)	Radium-228 (GFPC - no decay/ingrowth)	Isotopic Thorium (Alpha Spectrometry)	n/a	n/a	n/a	n/a	n/a	n/a	n/a	n/a	Sample Specific Notes:	
60162412-SMP-PL5-WA-OTH-0281	3/8/2011	13:30	Water	Water	12		x	x	x	x	x	x	x	x	x	x	n/a	n/a	n/a	n/a	n/a	n/a	n/a	n/a	* Further Testing if Gross Beta above 50 pci/L	
n/a n/a n/a n/a	n/a	n/a	n/a	n/a	n/a		n/a	n/a	n/a	n/a	n/a	n/a	n/a	n/a	n/a	n/a	n/a	n/a	n/a	n/a	n/a	n/a	n/a	n/a		
n/a n/a n/a n/a	n/a	n/a	n/a	n/a	n/a		n/a	n/a	n/a	n/a	n/a	n/a	n/a	n/a	n/a	n/a	n/a	n/a	n/a	n/a	n/a	n/a	n/a	n/a	n/a	n/a
n/a n/a n/a n/a	n/a	n/a	n/a	n/a	n/a		n/a	n/a	n/a	n/a	n/a	n/a	n/a	n/a	n/a	n/a	n/a	n/a	n/a	n/a	n/a	n/a	n/a	n/a	n/a	n/a
n/a n/a n/a n/a	n/a	n/a	n/a	n/a	n/a		n/a	n/a	n/a	n/a	n/a	n/a	n/a	n/a	n/a	n/a	n/a	n/a	n/a	n/a	n/a	n/a	n/a	n/a	n/a	n/a
n/a n/a n/a n/a	n/a	n/a	n/a	n/a	n/a		n/a	n/a	n/a	n/a	n/a	n/a	n/a	n/a	n/a	n/a	n/a	n/a	n/a	n/a	n/a	n/a	n/a	n/a	n/a	n/a
n/a n/a n/a n/a	n/a	n/a	n/a	n/a	n/a		n/a	n/a	n/a	n/a	n/a	n/a	n/a	n/a	n/a	n/a	n/a	n/a	n/a	n/a	n/a	n/a	n/a	n/a	n/a	n/a
n/a n/a n/a n/a	n/a	n/a	n/a	n/a	n/a		n/a	n/a	n/a	n/a	n/a	n/a	n/a	n/a	n/a	n/a	n/a	n/a	n/a	n/a	n/a	n/a	n/a	n/a	n/a	n/a
n/a n/a n/a n/a	n/a	n/a	n/a	n/a	n/a		n/a	n/a	n/a	n/a	n/a	n/a	n/a	n/a	n/a	n/a	n/a	n/a	n/a	n/a	n/a	n/a	n/a	n/a	n/a	n/a
n/a n/a n/a n/a	n/a	n/a	n/a	n/a	n/a		n/a	n/a	n/a	n/a	n/a	n/a	n/a	n/a	n/a	n/a	n/a	n/a	n/a	n/a	n/a	n/a	n/a	n/a	n/a	n/a
n/a n/a n/a n/a	n/a	n/a	n/a	n/a	n/a		n/a	n/a	n/a	n/a	n/a	n/a	n/a	n/a	n/a	n/a	n/a	n/a	n/a	n/a	n/a	n/a	n/a	n/a	n/a	n/a

Preservation Used: 1= Ice, 2= HCl; 3= H2SO4; 4=HNO3; 5=NaOH; 6= Other _____

Possible Hazard Identification
■ *Non-Hazard* ☐ *Flammable* ☐ *Skin Irritant* *Poison B* ☐ *Unknown* ☐

Sample Disposal (A fee may be assessed if samples are retained longer than 1 month)
☐ *Return To Client* ☐ *Disposal By Lab* ■ *Archive For* 1 *Months*

Special Instructions/QC Requirements & Comments: Possible hazards include radiological. Sample methods to comply with MSD Ordinance 12659 standards. Frack Tank # 255824

Relinquished by:	Company:	Date/Time:	Received by:	Company:	Date/Time:
[signature]	TA/AECOM	3/8/11 1520	[signature]	TA ~~3/8/11 N/T~~	3/8/11 1520
Relinquished by: [signature]	Company: TA	Date/Time: 3/8/11 1550	Received by: [signature]	Company: TA	Date/Time: 3/8/11 1550
Relinquished by:	Company:	Date/Time:	Received by:	Company:	Date/Time:

Lot F1C080575

TestAmerica - St. Louis

TestAmerica
THE LEADER IN ENVIRONMENTAL TESTING

Lot #(s): F1C080575

CONDITION UPON RECEIPT FORM

Client: AECOM

Quote No: 87754

COC/RFA No: 60162412-SMP-PLS-WA-OTH

363

Initiated By: BD Date: 3/4/11 Time: 1550

Shipping Information

Shipper: FedEx UPS DHL Courier Client Other: NT Multiple Packages: Y (N)

Shipping # (s):*

1.
2.
3.
4.
5.
6.
7.
8.
9.
10.

Sample Temperature (s):**

1. 12
2.
3.
4.
5.
6.
7.
8.
9.
10.

*Numbered shipping lines correspond to Numbered Sample Temp lines

**Sample must be received at 4°C ± 2°C- If not, note contents below. Temperature variance does NOT affect the following: Metals-Liquid or Rad tests- Liquid or Solids

Condition (Circle "Y" for yes, "N" for no and "N/A" for not applicable):

1.	(Y) N	Are there custody seals present on the cooler?	8.	Y (N)	Are there custody seals present on bottles?
2.	Y (N) N/A	Do custody seals on cooler appear to be tampered with?	9.	Y N (N/A)	Do custody seals on bottles appear to be tampered with?
3.	(Y) N	Were contents of cooler frisked after opening, but before unpacking?	10.	(Y) N N/A	Was sample received with proper pH[1]? (If not, make note below)
4.	(Y) N	Sample received with Chain of Custody?	11.	(Y) N	Sample received in proper containers?
* 5.	(Y) N N/A	Does the Chain of Custody match sample ID's on the container(s)?	12.	Y (N) N/A	Headspace in VOA or TOX liquid samples? (If Yes, note sample ID's below)
6.	Y (N)	Was sample received broken?	13.	Y N (N/A)	Was Internal COC/Workshare received?
7.	(Y) N	Is sample volume sufficient for analysis?	14.	Y N (N/A)	Was pH taken by original TestAmerica lab?

[1] For DOE-AL (Pantex, LANL, Sandia) sites, pH of ALL containers received must be verified, EXCEPT VOA, TOX and soils.

Notes: Samples just collected

* Received 2 unlabeled vials (trip blank)
* Received 3 unlabeled vials (sample)

Per MF Dupon all Rad samples - AB 3-8-11

Corrective Action:

- ☐ Client Contact Name: Informed by:
- ☐ Sample(s) processed "as is"
- ☐ Sample(s) on hold until: If released, notify:

Project Management Review: Date: 03-09-11

THIS FORM MUST BE COMPLETED AT THE TIME THE ITEMS ARE BEING CHECKED IN. IF ANY ITEM IS COMPLETED BY SOMEONE OTHER THAN THE INITIATOR, THEN THAT PERSON IS REQUIRED TO APPLY THEIR INITIAL AND THE DATE NEXT TO THAT ITEM.

ADMIN-0004, REVISED 10/21/08 \\Stsvr01\QA\FORMS\ST-LOUIS\ADMIN\Admin004 rev11.doc

Metropolitan St. Louis Sewer District
Division of Environmental Compliance
10 East Grand Avenue
St. Louis, MO 63147-2913
Phone: 314.768.6200 www.stlmsd.com

March 11, 2011

Julie Summers
MALLINCKRODT
3600 North Second St.
St. Louis, MO 63147

Re: Wastewater User Charge Billing for Special Discharge

Dear Ms. Summers:

This is to advise you of the wastewater user charges applicable to an on-site special discharge approved in our letter to you dated November 19, 2010, with 30 day extensions dated December 17, 2010 and January 19, 2011. You were advised of the extra-strength surcharges as part of the original approval letter. That charge was determined using the chemical oxygen demand concentration in the laboratory analytical report submitted in conjunction with your application for special discharge. The discharge date and quantity are from information submitted by you in a letter dated March 11, 2011.

Our Finance Department will bill you by invoice for the charges described below. These charges are based on the rates in MSD Wastewater User Charge Ordinance 13021. For your convenience, using the volume and strength of the waste discharged, the ordinance rates have been converted to a per-gallon basis.

PARTY TO BILL: Addressee

BILLING IS FOR: On-Site Special Discharge

DISCHARGE PERIOD: November 5, 2010 – February 11, 2011

SOURCE OF WASTE: Six unusable batches of Ioversol/water solution from Building 504 of the Mallinckrodt facility located at 3600 North Second Street, St. Louis, Missouri.

Discharge Period	Billing Item	Quantity	Units	Rate	Charge
11/5/10 – 2/11/11	Extra-Strength Surcharge	7,000	Gal	$0.36	$2,520.00
Totals:	------	7,000	Gal	-----	$2,520.00

Please do not pay until you receive our invoice. If you have any questions, please contact me at (314) 436-8755.

Sincerely,
METROPOLITAN ST. LOUIS SEWER DISTRICT
Steven M. Grace
Steve Grace
Environmental Assistant Engineer

bv
pc Chris Verplancke - Finance Dept.
Doug Mendoza
Brian Gibson
File: IU, MALLINCKRODT INC [2112059600], 3600 North Second Street, St. Louis, Missouri

COVIDIEN

MARCH 11, 2011

Mr. Steve Grace
Metropolitan St. Louis Sewer District
Department of Environmental Compliance
10 East Grand Avenue
St. Louis, MO 63147-2913

RE: Special Discharge Follow-up - PERMIT NO. 2112059600-3

Dear Mr. Grace:

Per a letter from your office dated November 19, 2010 an approval from MSD was received to discharge 7200 gallons of wastewater to MSD for treatment. The wastewater consisted of six unusable batches of an Ioversol/water solution from Building 504. The following documents the days this wastewater was actually discharged including discharge volumes:

- November 23, 2010: 1100 gallons from 7:00 am – 3:00 pm
- November 30, 2010: 1500 gallons from 7:00 am – 1:00 pm
- December 3, 2010: 900 gallons from 7:00 am – 3:00 pm
- December 8, 2010: 2200 gallons from 7:00 am – 3:00 pm
- December 31, 2010: 1100 gallons from 7:00 am – 1:00 pm
- February 11, 2011: 200 gallons from 7:00 am – 11:00 ma

All of the wastewater was discharged through plant sewers to the plant's neutralization system and then to MSD.

If you have any questions or need additional information, please call me at 314-654-1969.

Sincerely,

Julie Summers

Julie Summers
Environmental Manager

COVIDIEN/MALLINCKRODT
3600 NORTH SECOND STREET
ST. LOUIS, MO 63147

TELEPHONE: 314-654-2000
FAX: 314-654-1251

TO: Chris Verplancke, Finance Department

FROM: Steven M. Grace, DEC SMG

DATE: February 9, 2011

RE: **Wastewater User Charge Billing for Special Discharge**

Please bill, by invoice, the following charges applicable to an on-site special discharge approved in our letter dated October 30, 1998, as modified in letters dated November 20, 1998, July 19, 1999, March 28, 2001, October 13, 2004, June 19, 2006, and May 22, 2008. The discharge dates and quantity are from information submitted by Sharon Cotner, Corps of Engineers, in a letter dated January 28, 2011.

This charge is based on the rates in MSD Wastewater User Charge Ordinance 13021.

PARTY TO BILL: Larry Joellenbeck
The Shaw Group Inc.
1 Angelrodt Street
St. Louis, MO 63147

BILLING IS FOR: On-Site Special Discharge

DISCHARGE PERIOD: October through December 2010

SOURCE OF WASTE: Treated construction water from the St. Louis Downtown FUSRAP Site located at Mallinckrodt, Inc., 3600 N. Second Street, St. Louis, Missouri.

Discharge Period	Billing Item	Quantity	Units	Rate	Charge
10/1/10 - 12/31/10	Volume	411	CcF	$2.02	$830.22
Totals:	---	411	CcF	---	$830.22

If you have any questions, please call me on extension 8755.

bv

pc: Brian Gibson
Doug Mendoza
Larry Joellenbeck, The Shaw Group Inc., 1 Angelrodt St., St. Louis, MO 63147

File: IU, MALLINCKRODT INC [2112059600]

Metropolitan St. Louis Sewer District

Division of Environmental Compliance
10 East Grand Avenue
St. Louis, MO 63147-2913
Phone: 314.768.6200 www.stlmsd.com

February 9, 2011

Lisa Meyer
MALLINCKRODT
3600 North Second St.
St. Louis, MO 63147

Re: Wastewater User Charge Billing for Special Discharge

Dear Ms. Meyer:

This is to advise you of the wastewater user charges applicable to an on-site special discharge approved in our letter to you dated January 28, 2011. You were advised of the extra-strength surcharges as part of the original approval letter. That charge was determined using the COD and TSS concentrations contained in the laboratory analytical report provided with your application for special discharge. The discharge date and quantity are from information submitted by you in a letter dated February 7, 2011.

Our Finance Department will bill you by invoice for the charges described below. These charges are based on the rates in MSD Wastewater User Charge Ordinance 13021. For your convenience, using the volume and strength of the waste discharged, the ordinance rates have been converted to a per-gallon basis.

PARTY TO BILL: Addressee

BILLING IS FOR: On-Site Special Discharge

DISCHARGE PERIOD: January 29, 2011

SOURCE OF WASTE: Wastewater from a failed batch of magnesium stearate solution from Building X at the Mallinckrodt facility located at 3600 North Second Street, St. Louis, Missouri.

Discharge Period	Billing Item	Quantity	Units	Rate	Charge
1/29/11	Extra-Strength Surcharge	8,000	Gal	$0.02	$160.00
Total:	------	**8,000**	Gal	-----	**$160.00**

Please do not pay until you receive our invoice. If you have any questions, please contact me at (314) 436-8755.

Sincerely,
METROPOLITAN ST. LOUIS SEWER DISTRICT

Steven M. Grace

Steve Grace
Environmental Assistant Engineer

bv

pc Chris Verplancke - Finance Dept.
Doug Mendoza
Brian Gibson

File: IU, MALLINCKRODT INC [2112059600], 3600 North Second Street, St. Louis, Missouri

COVIDIEN

FEBRUARY 7, 2011

Mr. Steve Grace
Metropolitan St. Louis Sewer District
Department of Environmental Compliance
10 East Grand Avenue
St. Louis, MO 63147-2913

RE: Special Discharge Follow-up - PERMIT NO. 2112059600-3

Dear Mr. Grace:

Per a letter from your office dated January 28, 2011 an approval from MSD was received to discharge 8000 gallons of wastewater to MSD for treatment. The wastewater consisted of an unusable batch of magnesium stearate solution from Building X.

The discharge was completed on Saturday, January 29, 2011. All of the wastewater was discharged through plant sewers to the plant's neutralization system and then to MSD.

If you have any questions or need additional information, please call me at 314.654.3374.

Sincerely,

Lisa Meyer
Senior HSE Engineer

COVIDIEN/MALLINCKRODT
3600 NORTH SECOND STREET
ST. LOUIS, MO 63147

TELEPHONE: 314-654-2000
FAX: 314-654-1251

Metropolitan St. Louis Sewer District

Division of Environmental Compliance
10 East Grand Avenue
St. Louis, MO 63147-2913
Phone: 314.768.6200 www.stlmsd.com

February 2, 2011

Lisa Meyer
HS&E Engineer
MALLINCKRODT INC
3600 North Second Street
St. Louis, MO 63147

RE: NOTICE OF VIOLATION – WASTEWATER DISCHARGE PERMIT NO. 2112059600
For premise at: 3600 North Second Street, 63147

Dear Ms. Meyer:

We have received Ms. Summer's phone call on December 23, 2010, regarding the fourth quarter 2010 pH excursion, required under the permit referenced above. The self-monitoring report was recently submitted to MSD, received on January 27, 2011. As you already know, the following violation was identified:

VIOLATION OF DISCHARGE LIMITATIONS:

DATE	SAMPLE POINT	MSD ORDINANCE 12559 LIMIT (Article X, Section 2, Part D)	EXCURSIONS REPORTED FOR December 2010
12-22-10	010	5.5 - 11.5 SU No pH excursions longer than 60 minutes	Excursion for 80 minutes (pH 11.5-12.0 SU from 1240 to 1400)

Sample Point 010 is the square lid manhole located 50' N of the neutralization control building at Hall & Salisbury
SU = Standard pH Units IN = Instantaneous

REQUIRED ACTION/RESPONSE:

No further action is required. On December 29, 2010, we have received your letter which provided an explanation and corrective action for the pH excursion. In addition, there were no accumulated excursions exceeding eight hours in the same calendar month. Please keep us informed of your progress.

Thank you for helping us to comply with state and federal regulations. If you have any questions, please contact me at 314.436.8756.

Sincerely,
METROPOLITAN ST. LOUIS SEWER DISTRICT

SM Rehmer

Scott M. Rehmer
Assistant Engineer

pc: Jason Gill

Metropolitan St. Louis Sewer District

Division of Environmental Compliance
10 East Grand Avenue
St. Louis, MO 63147-2913
Phone: 314.768.6200 www.stlmsd.com

January 28, 2011

Lisa Meyer
MALLINCKRODT
3600 North Second St.
St. Louis, MO 63147

Dear Ms. Meyer:

We have reviewed your application dated January 26, 2011 requesting approval to discharge 8,000 gallons of wastewater to the Metropolitan St. Louis Sewer District for treatment. This wastewater is from a failed batch of magnesium stearate solution from Building X at the Mallinckrodt facility located at 3600 North Second Street, St. Louis, Missouri. This wastewater is subject to the categorical pretreatment standards in 40 CFR Part 414 subparts G and H. We understand that the wastewater will be discharged through sampling point 010.

Based on the information and sample results you provided, this wastewater meets MSD Ordinance 12559 standards and is approved for discharge into a sanitary sewer on site. The discharge into the sewer must be controlled at a rate that will not surcharge the lines in the area. This approval is valid for 30 days from the date of this letter.

You must be certain the waste is discharged into a sanitary or combined sewer inlet only. This letter does not authorize any discharge to a separate storm sewer, or to any watercourse, as any such discharge would be in violation of state and federal laws. **Please notify me at the number below when the discharge is to commence, and please ensure the onsite personnel discharging the wastewater in question are provided with a copy of this letter.**

For billing purposes associated with this high strength wastewater, you must confirm the volume of this wastewater discharged to us, in writing, at the completion of the discharge. This report is due no later than 28 days after this approval expires. Please refer to this letter and include the date of the discharge when providing that figure. Under the provisions of Ordinance 13021, you will be billed by invoice at the billing rate in effect at the time of discharge. The current rate contained in MSD Ordinance 13021 is $2.02 per hundred cubic feet ($2.70 per thousand gallons), $298.36 per ton for COD over 600 mg/L, and $222.62 per ton for TSS over 300 mg/L. Using the assumed COD and TSS concentrations contained in the laboratory analytical report provided, and the proposed discharge volume provided in your application, it is estimated that you will be discharging approximately 11 hundred cubic feet, less than one ton of COD over 600 mg/L (our quantitative estimate is 0.02 tons COD times $298.36), and approximately 0.5 tons of TSS over 300 mg/L (our quantitative estimate is 0.51 tons TSS times $222.62). Please do not pay this amount until you receive our invoice.

This discharge has been approved based upon the information you provided, and is subject to the conditions stated above. This approval may be revoked by the District at any time if any of the information is found to be incorrect, or if the conditions of this approval are violated. Also, if the discharge causes any operational or maintenance problem within the District's collection or treatment system, or results in violations of any conditions of the District's NPDES permit, Mallinckrodt will be considered responsible for damages.

If you have any questions, please call me at (314) 436-8755.

Sincerely,
METROPOLITAN ST. LOUIS SEWER DISTRICT

Steven M. Grace

Steve Grace
Environmental Assistant Engineer

bv

pc: Brian Gibson
Doug Mendoza

File: IU, MALLINCKRODT INC [2112059600], SP834

C1A

SD EVALUATION CHECKLIST - ON SITE

APPLICATION INFORMATION

Source Name: Mallinckrodt Inc.

Premise Address: 3600 N. 2nd St.

Send approval letter to applicant

Evaluated by: SMG

Date: 1/28/11

Application Dated: 1/26/11 Received: 1/26/11 All Requested Info. Received: 1/28/11

SOURCE FILING/DESCRIPTION

1 - Source in PIMS? (Y) / N
2 - If No, on IU Cross-Ref list? * Y / N
3 - If No, MSD Account # from E-CIS? Y / N
4 - If none, on "Source" list (pre-IMS)? ** Y / N
5 - If No, assigned SOUR# from PIMS.

* o:\costrecovery\cross reference xls file

** o:\costrecovery\sourlist xls file

SOURCE TYPE (circle): (IU) / Dead IU / SD

INDUSTRY ID: 21120596-00

Sample Point: No. Assigned: 834 Description: failed batch of magnesium stearate soln. from Bldg. X

Normal WW flow from premise? N/A _____ ccf/month, 2,992,101 GPD, _____ GPH. from SP010

REGULATORY STATUS

Is waste a Hazardous Waste? (N) / Y

Categorical standards apply? N / (Y) 40 CFR 414, Subparts G&H

Contain PCB/ asbestos/ radioactive/ dioxin/ used oil? (N) / Y

Regulatory Agency Oversight? (N) / Y

DISCHARGE CONSIDERATIONS At MSD's connection:

Ordinance Limits (12559, p32) exceeded? (N) / Y

Ordinance other limits exceeded (dye, flash pt <140F, temp >140F, obstruction, nuisance foaming/odor, corrosion causing): (N) / Y

Water Quality Standard exceeded? (N) / Y

Fumes in sewer exceed PEL/TLV limits? (N) / Y

Vapors in sewer exceed 10% of LEL? (N) / Y

RECOMMENDATION: (APPROVE) / DENY (cc WWTP Mgr for timed discharge)

APPROVAL CONDITIONS:

Timed Discharge (COD/BOD/WQ/foam): (N) / Y Limit = _____ gal/hour

Require Treatment before Discharge? (N) / Y

Laboratory analysis fee due? (N) / Y $_____

SMR required? (N) / Y Frequency/analysis: _____

SMR log: (N/A) / Remediation.xls / Nonremediation.xls

Volume Billing applies (water unmetered or credited)? N / (Y)

Bill High Strength? N / (Y) Yes, If use >60,000 gal/month water ✓ and, > norm WW strgth

Surcharge calculation attached: N/A / N / (Y)

Expiration log updated: (N/A) / N / Y

O:\CostRecovery\Special Discharge\C1a.Checklist.doc

On-Site Special Discharge High Strength Flow Rate and Surcharge Calculator

1 GENERAL INFORMATION:

Date: 01/28/11
Calculated by: Steve Grace
Source name: Mallinckrodt, Inc.
Waste material: Off-specification magnesium stearate
Discharge volume: 8,000 gallons

2 STRENGTH INFORMATION:

Sample BOD =	0	mg/l =	0	lbs BOD to be discharged
Sample COD =	1,170	mg/l =	78	lbs COD to be discharged
Sample TSS =	15,500	mg/l =	for surcharge calculation only	

3 PLANT DATA: 2010

Treatment area: Bissell

	Flow (MGD)	BOD (mg/L)	COD (mg/L)	BOD (lb/hr)	COD (lb/hr)	Max Loading = 10% BOD (lb/hr)	Max Loading = 10% COD (lb/hr)
Bissell	**140**	**146**	**292**	**7,113**	**14,227**	**711**	**1,423**
Coldwater	26	188	377	1,704	3,408	170	341
Fenton	5	388	776	679	1,357	68	136
Grand Glaize	16	129	405	708	2,218	71	222
Lemay	131	78	210	3,531	9,584	353	958
Lower Meramec	13	124	409	543	1,785	54	179
Missouri River	27	280	559	2,671	5,341	267	534

4 MINIMUM REQUIRED FLOW RATE:

	BOD (hours	BOD (gpm)	COD (hours)	COD (gpm)
Bissell	**0.00**	**0**	**0.05**	**2430**
Coldwater	0.00	0	0.23	582
Fenton	0.00	0	0.58	232
Grand Glaize	0.00	0	0.35	379
Lemay	0.00	0	0.08	1637
Lower Meramec	0.00	0	0.44	305
Missouri River	0.00	0	0.15	912

5 SURCHARGE AND VOLUME BILLING

Is volume subject to billing? yes (yes/no)
Ratio of BOD/COD = 0.00

(Sample BOD) - 300 = 0 mg/l subject to surcharge
(sample COD) - 600 = 570 mg/l subject to surcharge
(sample TSS) - 300 = 15200 mg/l subject to surcharge

If BOD/COD ratio <= 0.35, the following calculations use the COD value. Otherwise they use the BOD value

Current rates under Ordinance: 13021

Volume = $ 2.02 /CcF
BOD = $ 596.72 /ton
COD = $ 298.36 /ton
TSS = $ 222.62 /ton

Flow charge = $ 21.60 based on volume = 10.7 CcF
BOD surcharge = $ -
COD surcharge = $ 5.67
TSS surcharge = $ 112.91
Total discharge charge = $ 140.18
Customer charge = $ 140.18 DEC charges special discharge customers for total charges > $20.00
Approximate charge/gallon = $ 0.02

Comments

Require volume report for billing purposes. Smg

COVIDIEN

Facsimile Communication

To: Mr. Steve Grace

Company: MSD Environmental Compliance

Fax Number: 314.436.8766

Date: January 26, 2011

Number of Pages *(including cover sheet)*: 8

Health, Safety, Environmental

Lisa Meyer
Senior HSE Engineer

Covidien/Mallinckrodt
3600 N. Second St.
St. Louis, Missouri 63147

Telephone 314-654-3374
Facsimile 314-654-1251

- ☐ For your information
- X Please respond
- X Urgent
- ☐ Confidential

Comments:

Dear Mr. Grace,

Attached please find an application for the Special Discharge of a 27% magnesium stearate and water solution from Building X. A similar Special Discharge request was approved by your office on February 10, 2010.

We would like to discharge this material today if at all possible. If you have any questions or need additional information, please contact me.

Thank you,

Lisa Meyer

Metropolitan St. Louis Sewer District

Phone No. (314) 436-8710
Division of Environmental Compliance, 10 East Grand Avenue, St. Louis, Missouri 63147 Fax No. (314) 436-8766

APPLICATION FOR SPECIAL DISCHARGE APPROVAL

I. WASTEWATER SOURCE IDENTIFICATION:

Site Name: Mallinckrodt
Premise Address: 3600 North 2nd St.
City: St. Louis State: MO Zip: 63147
Owner: Mallinckrodt
Contact Person: Lisa Meyer
Title: Senior HSE Engineer
Phone: 314.654.3374 Fax: 314.654.1251

II. APPLICANT (mailing information):

Applicant Name: Lisa Meyer
Title: Senior HSE Engineer
Company Name: Mallinckrodt
Mailing Address: 3600 North 2nd St.
City: St. Louis State: MO Zip: 63147
Phone: 314.654.3374 Fax: 314.654.1251

III. A. MATERIAL TO BE DISCHARGED (check all applicable boxes):

1. Wastewater description/location: Failed batch of Magnesium stearate solution in Building X
2. Process/activity generating wastewater: Failed batch of Magnesium stearate solution
   pH 8.2
3. Physical and chemical composition: List all constituents, and known or potentially present regulated contaminants below.
   ☐ See separate listing enclosed, and/or ☐ See analytical results enclosed, and/or ☑ Material Safety Data Sheet enclosed.

DESCRIPTION	RANGE	UNIT
Water	63	%
Magnesium stearate	27	%

DESCRIPTION *(continued)*	RANGE	UNIT

4. Is this wastewater from a process subject to EPA's categorical standards in 40 CFR Subchapter N? ☑ Yes ☐ No
   a. If yes, the applicable standards are in: 40 CFR Part 414, Subpart G & H ☑ Existing source ☐ New source
5. Does this wastewater contain polychlorinated biphenyls, asbestos or radioactive material? ☐ Yes ☑ No
   a. If yes, describe:
6. Representative sample: ☐ Laboratory results attached, and/or ☐ Sample provided (1/2 gallon minimum, clear container)
   a. Sample collection point/location: Collection method:
   b. Sampler's name/Co.: Sample date/time:
   c. Attach chain of custody as available
7. Discharge will occur over the following time period: ☑ < 30 days ☐ ≥ Two years ☐ Other:
   a. Expected total volume of wastewater to be discharged over the time period above: Gallons
   b. Proposed discharge volume: 8000 Gallons, at a frequency of: ☑ One time ☐ Daily ☐ Weekly ☐ Monthly ☐ Once/three months ☐ Once/six months ☐ Other:
8. Pretreatment of wastewater prior to discharge: ☐ None ☑ Yes, describe: pH adjust at main outfall SP010
   a. If yes, attach site plan, pretreatment system schematic, and design specifications.
9. Wastewater from a remediation project under: ☐ Superfund/CERCLA ☐ RCRA ☐ Voluntary program ☐ UST ☑ Not applicable
   a. If from a remediation project, briefly describe the past and present utilization of the property:

III.B. MATERIAL FROM UNDERGROUND STORAGE TANK SOURCE

☑ **Not applicable (go to Section IV)**

Please answer the following questions if you are requesting to discharge wastewater associated with an underground storage tank system.

1. a. Wastewater from: ☐ Inside UST(s) ☐ UST system pit ☐ Excavation outside UST system pit ☐ Monitoring well ☐ Groundwater remediation system

   b. UST project involves wastewater from: ☐ UST(s) closed in place ☐ UST(s) removed ☐ Remediation ☐ Upgrade ☐ Maintenance activities ☐ Well monitoring ☐ Other, explain: _____

   c. If wastewater is from a closure project, how long has UST(s) been out of service: _____ years

2. a. State assigned UST site identification number: _____ ☐ Not applicable

   b. Number of USTs affected: _____ ☐ Unknown

   c. For the UST(s) involved, their state identification number(s): _____ ☐ Not applicable

   d. Service Station Identification Number, as applicable: _____

3. Tank contents/former contents: ☐ Gasoline ☐ #2 diesel ☐ Used oil ☐ Unknown ☐ Other: _____

IV. DISCHARGE LOCATION

1. ☑ On-site. Describe proposed point of entry to sewer and the discharge rate (must be a sanitary or combined sewer): _____
   Building X sewer to main outfall SP010 Note: Range of discharge must not surcharge sewer line.

2. ☐ Haul to MSD Bissell Point Hauled Waste Receiving Station at 10 E. Grand, St. Louis, MO.

   a. Transporters Name: _____ and MSD Hauler ID Number: _____

   b. Hazardous Waste Certification:

   For wastewater which is hauled to MSD's Bissell Point Hauled Waste Receiving Station, I hereby certify that to the best of my knowledge and belief, the above hauled waste is not classified as a RCRA "hazardous waste" as defined by the MDNR in 10 CSR 25 or USEPA in 40 CFR Part 261.

   Applicant Name (print): _____

   Signature: _____ **Date:** _____

ADDITIONAL INFORMATION:

_____

_____

_____

_____

_____

_____

V. APPLICANT SIGNATURE AND CERTIFICATION

This application must be signed by the applicant: either the source contact, or a contractor or agent directly responsible for site activities.

I hereby certify that I am directly responsible for activities at the site regarding the wastewater to be discharged, and to the best of my knowledge and belief, based on appropriate inquiry, the information in this application is true, complete, and accurate. The samples or analyses submitted are representative of the materials to be discharged. If granted approval to discharge, I agree to abide by the MSD Ordinances, and all applicable federal, state and local regulations. I agree to pay the costs of any pre-approval analyses performed by MSD and to pay any applicable disposal charges for the volume and strength of the wastes discharged.

Applicant Name (print): Lisa Meyer

Signature: Lisa Meyer **Date:** 01/26/11

FOR MSD USE ONLY:

File Name: _____ ID No: _____ Sample Point No: _____

January 28, 2011

Lisa Meyer
Mallinckrodt Inc.
3600 N. 2nd St.
St. Louis, MO 63147
TEL: (314) 654-3374
FAX: (314) 654-1251

RE: BX

WorkOrder: 11010866

Dear Lisa Meyer:

TEKLAB, INC received 1 sample on 1/27/2011 9:06:00 AM for the analysis presented in the following report.

Samples are analyzed on an as received basis unless otherwise requested and documented. The sample results contained in this report relate only to the requested analytes of interest as directed on the chain of custody. NELAP accredited fields of testing are indicated by the letters NELAP under the Certification column. All tests are performed in the Collinsville, IL laboratory unless otherwise noted in the Case Narrative.

All quality control criteria applicable to the test methods employed for this project have been satisfactorily met and are in accordance with NELAP except where noted. The following report shall not be reproduced, except in full, without the written approval of Teklab, Inc.

If you have any questions regarding these tests results, please feel free to call.

Sincerely,

Heather A. White

Heather A. White
Project Manager
(618)344-1004 ex 20
HWhite@teklabinc.com

Client: Mallinckrodt Inc. **Work Order:** 11010866

Client Project: BX **Report Date:** 28-Jan-11

Abbr Definition

CCV	Continuing calibration verification is a check of a standard to determine the state of calibration of an instrument between recalibration.
DF	Dilution factor is the dilution performed during analysis only and does not take into account any dilutions made during sample preparation. The reported result is final and includes all dilutions factors.
DNI	Did not ignite
DUP	Laboratory duplicate is an aliquot of a sample taken from the same container under laboratory conditions for independent processing and analysis independently of the original aliquot.
ICV	Initial calibration verification is a check of a standard to determine the state of calibration of an instrument before sample analysis is initiated.
IDPH	IL Dept. of Public Health
LCS	Laboratory control sample, spiked with verified known amounts of analytes, is analyzed exactly like a sample to establish intra-laboratory or analyst specific precision and bias or to assess the performance of all or a portion of the measurement system. The acceptable recovery range is in the QC Package (provided upon request).
LCSD	Laboratory control sample duplicate is a replicate laboratory control sample that is prepared and analyzed in order to determine the precision of the approved test method. The acceptable recovery range is listed in the QC Package (provided upon request).
MB	Method blank is a sample of a matrix similar to the batch of associated sample (when available) that is free from the analytes of interest and is processed simultaneously with and under the same conditions as samples through all steps of the analytical procedures, and in which no target analytes or interferences should present at concentrations that impact the analytical results for sample analyses.
MDL	Method detection limit means the minimum concentration of a substance that can be measured and reported with 99% confidence that the analyte concentration is greater than zero and is determined from analysis of a sample in a given matrix type containing the analyte.
MS	Matrix spike is an aliquot of matrix fortified (spiked) with known quantities of specific analytes that is subjected to the entire analytical procedures in order to determine the effect of the matrix on an approved test method's recovery system. The acceptable recovery range is listed in the QC Package (provided upon request).
MSD	Matrix spike duplicate means a replicate matrix spike that is prepared and analyzed in order to determine the precision of the approved test method. The acceptable recovery range is listed in the QC Package (provided upon request).
ND	Not Detected at the Reporting Limit
NELAP	NELAP Accredited
PQL	Practical quantitation limit means the lowest level that can be reliably achieved within specified limits of precision and accuracy during routine laboratory operation conditions. The acceptable recovery range is listed in the QC Package (provided upon request).
RL	The reporting limit the lowest level that the data is displayed in the final report. The reporting limit may vary according to customer request or sample dilution. The reporting limit may not be less than the MDL.
RPD	Relative percent difference is a calculated difference between two recoveries (ie. MS/MSD). The acceptable recovery limit is listed in the QC Package (provided upon request).
SPK	The spike is a known mass of target analyte added to a blank sample or sub-sample; used to determine recovery deficiency or for other quality control purposes.
Surr	Surrogates are compounds which are similar to the analytes of interest in chemical composition and behavior in the analytical process, but which are not normally found in environmental samples.
TNTC	Too numerous to count (> 200 CFU)

Qualifiers

# - Unknown hydrocarbon	B - Analyte detected in associated Method Blank
E - Value above quantitation range	H - Holding times exceeded
J - Analyte detected below quantitation limits	M - Manual Integration used to determine area response
ND - Not Detected at the Reporting Limit	R - RPD outside accepted recovery limits
S - Spike Recovery outside recovery limits	X - Value exceeds Maximum Contaminant Level

Case Narrative

Client: Mallinckrodt Inc.

Work Order: 11010866

Client Project: BX

Report Date: 28-Jan-11

Cooler Receipt Temp: 13.2 °C

Teklab, Inc.
Environmental Laboratory

Laboratory Results

http://www.teklabinc.com/

Client: Mallinckrodt Inc.
Work Order: 11010866
Client Project: BX
Report Date: 28-Jan-11
Lab ID: 11010866-001
Client Sample ID: BX
Matrix: AQUEOUS
Collection Date: 01/27/2011 7:45

Analyses	Certification	RL	Qual	Result	Units	DF	Date Analyzed	Batch
EPA 600 410.4								
Chemical Oxygen Demand	NELAP	100		**1170**	mg/L	2	01/27/2011 12:35	R145042
STANDARD METHODS 18TH ED. 2540 D								
Total Suspended Solids	NELAP	6		**15500**	mg/L	1	01/27/2011 9:13	R145002

Client: Mallinckrodt Inc.

Client Project: BX

Work Order: 11010866

Report Date: 28-Jan-11

Locations

	Collinsville		Springfield		Kansas City
Address	5445 Horseshoe Lake Road	Address	3920 Pintail Dr	Address	8421 Nieman Road
City	Collinsville	City	Springfield	City	Lenexa
State	IL	State	IL	State	KS
Zip	62234-7425	Zip	62711-9415	Zip	66214
Phone	(618) 344-1004	Phone	(217) 698-1004	Phone	(913) 541-1998
Fax	(618) 344-1005	Fax	(217) 698-1005	Fax	(913) 541-1998
Email	jhriley@teklabinc.com	Email	kmcclain@teklabinc.com	Email	dthompson@teklabinc.com

Accreditations

State	Dept	Cert #	NELAP	Exp Date	Lab
Illinois	IEPA	100226	NELAP	1/31/2012	Collinsville
Kansas	KDHE	E-10374	NELAP	1/31/2011	Collinsville
Louisiana	LDEQ	166493	NELAP	6/30/2011	Collinsville
Louisiana	LDEQ	166578	NELAP	6/30/2011	Springfield
Arkansas	ADEQ	88-0966		3/14/2011	Collinsville
Illinois	IDPH	17584		5/31/2011	Collinsville
Kentucky	UST	0073		5/26/2012	Collinsville
Missouri	MDNR	00930		5/31/2011	Collinsville
Oklahoma	ODEQ	9978		8/31/2011	Collinsville

Teklab, Inc.
Environmental Laboratory

Receiving Check List

http://www.teklabinc.com/

Client: Mallinckrodt Inc.

Client Project: BX

Work Order: 11010866

Report Date: 28-Jan-11

Carrier: Jacob Grimes

Received By: MLD

Completed by: Marvin L. Darling II
On: 27-Jan-11
Marvin L. Darling

Reviewed by: Elizabeth A. Hurley
On: 27-Jan-11
Elizabeth A. Hurley

Pages to follow: Chain of custody [1] Extra pages included [0]

Shipping container/cooler in good condition?	Yes ☑	No ☐	Not Present ☐	Temp °C	13.2	
Type of thermal preservation?	None ☐	Ice ☑	Blue Ice ☐	Dry Ice	☐	
Chain of custody present?	Yes ☑	No ☐				
Chain of custody signed when relinquished and received?	Yes ☑	No ☐				
Chain of custody agrees with sample labels?	Yes ☑	No ☐				
Samples in proper container/bottle?	Yes ☑	No ☐				
Sample containers intact?	Yes ☑	No ☐				
Sufficient sample volume for indicated test?	Yes ☑	No ☐				
All samples received within holding time?	Yes ☑	No ☐				
Reported field parameters measured:	Field ☐	Lab ☐	NA ☑			
Container/Temp Blank temperature in compliance?	Yes ☑	No ☐				
When thermal preservation is required, samples are compliant with a temperature between 0.1°C - 6.0°C, or when samples are received on ice the same day as collected.						
Water - vials have zero headspace?	Yes ☐	No ☐	No VOA vials ☑			
Water - TOX containers have zero headspace?	Yes ☐	No ☐	No TOX containers ☑			
Water - pH acceptable upon receipt?	Yes ☑	No ☐				

Any No responses must be detailed below or on the COC.

CHAIN OF CUSTODY

pg. ____ of ____ Work Order # 1101086 6

TEKLAB, INC. 5445 Horseshoe Lake Road ~ Collinsville, IL 62234 ~ Phone: (618) 344-1004 ~ Fax: (618) 344-1005

Client: Mallinckrodt
Address: 3600 N 2nd St
City / State / Zip: St Louis MO 63147
Contact: Lisa Meyer Phone: 314 654 3374
E-Mail: Fax:

Samples on: ☒ Ice ☐ Blue Ice ☐ No Ice 1.2 °C
Preserved in: ☐ Lab ☒ Field FOR LAB USE ONLY
Lab Notes: per Lisa Meyer/Heather White, analyze on same day TAT is possible. MDII 1/27/11
Comments:

Teklab, Inc.
Courier Pick Up

- Are these samples known to be involved in litigation? If yes, a surcharge will apply. ☐ Yes ☒ No
- Are these samples known to be hazardous? ☐ Yes ☒ No
- Are there any required reporting limits to be met on the requested analysis? If yes, please provide limits in comment section. ☒ Yes ☐ No

Project Name / Number: BX
Sample Collector's Name: NS
Results Requested: ☐ Standard ☒ 1-2 Day (100% Surcharge) ☐ Other_____ ☐ 3 Day (50% Surcharge)
Billing Instructions:

Lab Use Only	Sample Identification	Date/Time Sampled	# and Type of Containers: UNPRES	HNO_3	NaOH	H_2SO_4	HCL	MeOH	$NaHSO_4$	Other	MATRIX: Water	Drinking Water	Soil	Sludge	Sp. Waste	INDICATE ANALYSIS REQUESTED: ~~BOD~~ COD	TSS
1101086 01	BX	1/27/11 0745	1			1					X					X	X

RUSH

Relinquished By	Date / Time	Received By	Date / Time
Troy Coler	1/27/11 8:29		1/27/11 0829
	1/27/11 0906	Marvin R. Darling II	1/27/11 0906

The individual signing this agreement on behalf of client acknowledges that he/she has read and understands the terms and conditions of this agreement, on the reverse side, and that he/she has the authority to sign on behalf of client.

WHITE & YELLOW – LAB PINK – SAMPLER'S COPY

MSD 011503

SR
1-31

COVIDIEN

January 25, 2011

Mr. Doug Mendoza
Metropolitan St. Louis Sewer District
Department of Environmental Compliance
10 East Grand Avenue
St. Louis, MO 63147

Re: 2010 4th Quarter Self-Monitoring Report for Permit No. 21120596 - 3

Dear Mr. Mendoza,

Please find enclosed the 2010 4th Quarter Self Monitoring report for Mallinckrodt Inc.

The following sample points received no pharmaceutical process water flow during the third quarter: SP008, SP930 and SP935.

In accordance with requirements in MSD Ordinance No. 12559, we would like to inform you that an interim Site Director at the St. Louis Plant has been named. James A. Walter is the new interim Site Director and designated authority for responsibility for the overall operation of this facility.

An Ameren power surge occurred on November 16, 2010 causing a limited plant power outage which included the lift pumps at SP011. Samples were collected and analyzed and are included in this report. However, it was later determined that the duration of the overflow was under 90 minutes and therefore below the permit conditions requiring samples.

As was reported to you in a follow-up letter on October 21, 2010, an unplanned acetonitrile (CAS #75-05-8) release occurred at the site on October 16, 2010. Approximately 165 gallons of acetonitrile was discharge to a plant sewer and to MSD through the plant's main outfall, SP010.

On November 4, 2010, a follow-up letter was written to your office to detail an unplanned ethylene glycol release that occurred on October 30, 2010 from Building 250. The estimated total release of ethylene glycol was approximately 3855 pounds discharged to a plant sewer and to MSD through the plant's main outfall, SP010.

RECEIVED
JAN 27 2011
DIVISION OF
ENVIRONMENTAL COMPLIANCE

COVIDIEN/MALLINCKRODT
3600 NORTH SECOND STREET
ST. LOUIS, MO 63147

TELEPHONE: 314-654-2000
FAX: 314-654-1251

COVIDIEN

On December 22, 2010, a follow-up letter was written to your office to detail an unplanned sodium hydroxide solution release that occurred on December 18, 2010. The estimated total release of the 4% sodium hydroxide/water solution was 15 gallons which discharged to a plant sewer and to MSD through the plant's main outfall, SP010.

As was reported in a follow-up letter was written on December 29, 2010, a pH exceedance occurred on December 22, 2010 at the plant's main outfall SP010 in which the upper permit limit of 11.5 was exceeded for longer than 60 minutes. pH data is included in this report documenting this exceedance.

If you have any questions or require more detailed information, please contact me at 314.654.3374.

Sincerely,

Lisa Meyer
Senior HSE Engineer

ENCLOSURES

RECEIVED
JAN 27 2011
DIVISION OF
ENVIRONMENTAL COMPLIANCE

COVIDIEN/MALLINCKRODT
3600 NORTH SECOND STREET
ST. LOUIS, MO 63147

TELEPHONE: 314-654-2000
FAX: 314-654-1251

PART III: SPECIAL CERTIFICATION STATEMENTS

Based on the special conditions contained in your discharge permit you may be required to certify the following.
Please review your permit and **PLACE YOUR INITIALS ON THE LINES NEXT TO THE CERTIFICATIONS.**

A	NO CHANGE IN WASTEWATER DISCHARGE AT SAMPLE POINTS WITH NO MONITORING REQUIRED
	For permit special conditions that waive monitoring at any sample point(s) specified in your permit, you are required to make the following certification for each report in which monitoring is waived: ____ I certify, since the last discharge monitoring report, there has been no change in the character of the wastes discharged at sample points 001 and 002. ____ I certify, since the last discharge monitoring report, there has been no discharge from sample points 008 and 011.* *except as described in this report for SP011.
B	NO CHANGE IN WASTEWATER DISCHARGE AT ACTIVE CONNECTIONS WITHOUT SAMPLE POINTS
	For permit special conditions that waive monitoring at active connection points which are not specified as sample points in your permit, you are required to make the following certification: ____ I certify, since the last discharge monitoring report, there has been no change in the character of wastes discharged at those active connection points which are not specified in my permit.
E	NO DISCHARGE OF CATEGORICAL WASTE
	For permit special conditions that prohibit discharge of wastes which are subject to certain categorical pretreatment standards, you are required to make the following certification: ____ I certify, since the last discharge monitoring report, there has been no discharge of wastes which are subject to pretreatment standards in 40 CFR 414 (except for those wastes conveyed by SP 905).
F	CYANIDE NOT USED OR GENERATED IN 40 CFR 439 OPERATIONS
	Discharges subject to Pharmaceutical Categorical Standards (40 CFR 439) can be exempted from limitations and monitoring for Total Cyanide at the Pharmaceutical sample points 080, 915, 920, 935, 936, and 937, subject to the following certification: ____ I certify, since the last discharge monitoring report, cyanide has not been used or generated in any pharmaceutical manufacturing process subject to Categorical Standards in 40 CFR 439.
H	PHARMACEUTICAL POLLUTANTS NOT USED OR GENERATED IN 40 CFR 439 OPERATIONS
	Discharges subject to Pharmaceutical Categorical Standards (40 CFR 439) can be exempted from monitoring for certain 40 CFR 439-regulated pollutants at the Pharmaceutical sample points 915, 935, and 936, subject to the following certification: ____ I certify, since the last discharge monitoring report, the 40 CFR 439-regulated pollutants, as determined in permittee's report dated April 5, 2010, have not been used or generated in any pharmaceutical manufacturing process subject to Categorical Standards in 40 CFR 439. In addition, the above-referenced report remains valid.
I	SURROGATE MONITORING ALLOWED FOR 40 CFR 439 OPERATIONS
	Discharges subject to Pharmaceutical Categorical Standards (40 CFR 439) can be exempted from monitoring for certain 40 CFR 439-regulated pollutants, and replaced by monitoring for surrogate pollutant(s), at the Pharmaceutical sample points 920 and 937 subject to the following certification: ____ I certify, since the last discharge monitoring report, the 40 CFR 439-regulated pollutants, as determined in permittee's report dated April 5, 2010, continue to receive the same degree of treatment as the surrogate pollutant(s). In addition, the above-referenced report remains valid.

PART IV: GENERAL CERTIFICATION STATEMENTS

B	DISCHARGE MONITORING REPORT CERTIFICATION
	All permittees must sign and complete the information below: I certify under penalty of Law that this document and all attachments were prepared under my direction or supervision in accordance with a system designed to assure that qualified personnel properly gather and evaluate the information submitted. Based on my inquiry of the person or persons who manage the system, or those persons directly responsible for gathering the information, the information submitted is, to the best of my knowledge and belief, true, accurate, and complete. I am aware that there are significant penalties for submitting false information, including the possibility of fine and imprisonment for knowing violations. Print or type name of signing official: James A. Walter Title: Site Director Telephone: 314.654.1300 Signature: ____ Date: 1/25/11

RECEIVED
JAN 27 2011
DIVISION OF
ENVIRONMENTAL COMPLIANCE

METROPOLITAN ST. LOUIS SEWER DISTRICT
INDUSTRIAL USER RADIOACTIVE MATERIALS DISCHARGE REPORT

PART I: IDENTIFYING INFORMATION

Company Name: Mallinckrodt - Covidien

Permit No: 21120596-3

Premise Address: 3600 N Second St. St. Louis, MO 63147

Reporting Period: ☐(JAN-MAR) ☐(APR-JUNE) ☐(JULY-SEPT) ☒(OCT-DEC)

PART II: RECORD OF DISPOSAL OF RADIOACTIVE MATERIALS TO THE SEWER SYSTEM

RADIONUCLIDE	ACTIVITY DISCHARGED (millicuries)
TOTAL ACTIVITY DISCHARGED:	NO activity recorded this period.

PART III: CERTIFICATION STATEMENTS

Place your initials in the box under item A.
Everyone must complete the information under items A & B and sign this report.

A. CERTIFICATION OF COMPLIANCE WITH STATE AND FEDERAL REGULATIONS

☒ I certify that to the best of my knowledge & belief, all requirements of 10 CFR Part 20.2003 and 19 CSR Part 20-10.090 governing disposal by release into sanitary sewage for material regulated by the Nuclear Regulatory Commission and the Missouri Department of Health, respectively, have been met for the period covered by this report.

B. RADIOACTIVE MATERIALS DISCHARGE REPORT CERTIFICATION

I certify under penalty of Law that this document and all attachments were prepared under my direction or supervision in accordance with a system designed to assure that qualified personnel properly gather and evaluate the information submitted. Based on my inquiry of the person or persons who manage the system, or those persons directly responsible for gathering the information, the information submitted is, to the best of my knowledge and belief, true, accurate, and complete. I am aware that there are significant penalties for submitting false information, including the possibility of fine and imprisonment for knowing violations.

RECEIVED
JAN 27 2011
DIVISION OF
ENVIRONMENTAL COMPLIANCE

Print/type name of signing official: James A. Walter

Title: Site Director Telephone: 314-654-1300

Signature: Date: 1/25/11

radrpt.doc 2/00

MSD 011507

METROPOLITAN ST. LOUIS SEWER DISTRICT
2010 INDUSTRIAL USER SELF MONITORING REPORT

PART I: IDENTIFYING INFORMATION

Company Name: **Mallinckrodt Inc.**

Permit No.: 2112059600 - 3 Effective Date: 06-01-2010 Expiration Date: 05-31-2015

Premise Address: 3600 North Second St., St. Louis, MO 63147

Monitoring Period: _____(JAN-MAR) _____(APR-JUNE) _____(JULY-SEPT) ___X__(OCT-DEC)

Samples Collected By: Mallinckrodt Inc

Analysis Performed By: Teklab

Part II: ANALYTICAL RESULTS OF SELF MONITORING

MSD SAMPLE POINT REFERENCE NUMBERS	------>		**001**						
DATES ON WHICH SAMPLES WERE COLLECTED	------>		NA						
TIMES AT WHICH SAMPLES WERE COLLECTED	------>								
PARAMETER	LIMIT	**RECORD SAMPLE TYPES (G,C,M OR E) & RESULTS BELOW** G=grab,C=composite,M=measured flow,E=estimated flo							UNITS
FLOW		E	1,000						gal/day
NO MONITORING REQUIRED (Sanitary Only)									
There have been no change in the character of the wastes discharged since the last report.									

RECEIVED
JAN 27 2011
DIVISION OF
ENVIRONMENTAL COMPLIANCE

METROPOLITAN ST. LOUIS SEWER DISTRICT
2010 INDUSTRIAL USER SELF MONITORING REPORT

PART I: IDENTIFYING INFORMATION

Company Name: **Mallinckrodt Inc.**

Permit No.: 2112059600 - 3 Effective Date: 06-01-2010 Expiration Date: 05-31-2015

Premise Address: 3600 North Second St., St. Louis, MO 63147

Monitoring Period: _____(JAN-MAR) ____(APR-JUNE) ____(JULY-SEPT) __X__(OCT-DEC)

Samples Collected By: Mallinckrodt Inc

Analysis Performed By: Teklab

Part II: ANALYTICAL RESULTS OF SELF MONITORING

MSD SAMPLE POINT REFERENCE NUMBERS	----->		002						
DATES ON WHICH SAMPLES WERE COLLECTED	----->		NA						
TIMES AT WHICH SAMPLES WERE COLLECTED	----->								
PARAMETER	LIMIT	RECORD SAMPLE TYPES (G,C,M OR E) & RESULTS BELOW G=grab,C=composite,M=measured flow,E=estimated flo							UNITS
FLOW		E	2,200						gal/day
NO MONITORING REQUIRED (Sanitary Only)									
There have been no change in the character of the wastes discharged since the last report.									

RECEIVED

JAN 27 2011

DIVISION OF
ENVIRONMENTAL COMPLIANCE

METROPOLITAN ST. LOUIS SEWER DISTRICT
2010 INDUSTRIAL USER SELF MONITORING REPORT

PART I: IDENTIFYING INFORMATION

Company Name: **Mallinckrodt Inc.**

Permit No.: 2112059600 - 3 Effective Date: 06-01-2010 Expiration Date: 05-31-2015

Premise Address: 3600 North Second St., St. Louis, MO 63147

Monitoring Period: ____(JAN-MAR) ____(APR-JUNE) ____(JULY-SEPT) __X__(OCT-DEC)

Samples Collected By: Mallinckrodt

Analysis Performed By: TEKLAB

Part II: ANALYTICAL RESULTS OF SELF MONITORING

MSD SAMPLE POINT REFERENCE NUMBERS	----->	003		009		099		
DATES ON WHICH SAMPLES WERE COLLECTED	----->	10/20/2010		10/20/2010		calculated		
TIMES AT WHICH SAMPLES WERE COLLECTED	----->	0710, 0815, 0915, 1015		0735, 0835, 0935, 1035		n/a		
PARAMETER	LIMIT	RECORD SAMPLE TYPES (G,C,M OR E) & RESULTS BELOW G=grab,C=composite,M=measured flow,E=estimated flow						UNITS
FLOW		M	64,368	M	45,274	E	19,094	gal/day
Oil & Grease	200	G	<5	G	<5	E	<5	mg/l
Biochemical Oxygen Demand	****	C	61	C	98	E	0*	mg/l
Chemical Oxygen Demand	****	C	188	C	32	E	558	mg/l
Total Suspended Solids	****	C	11	C	10	E	13	mg/l
Temperature	****	G	21	G	19	E	26	deg C
pH	****	G	6.0	G	6.0	E	6.0	S.U.
Lab Dilution Factor			1		1			

**** No limits for SP003 or SP009;
monitoring requirement only for calculation at SP099

* Calculated value was less than zero.

RECEIVED
JAN 27 2011
DIVISION OF
ENVIRONMENTAL COMPLIANCE

METROPOLITAN ST. LOUIS SEWER DISTRICT
2010 INDUSTRIAL USER SELF MONITORING REPORT

PART I: IDENTIFYING INFORMATION

Company Name: **Mallinckrodt Inc.**

Permit No.: 2112059600 - 3 Effective Date: 06-01-2010 Expiration Date: 05-31-2015

Premise Address: 3600 North Second St., St. Louis, MO 63147

Monitoring Period: _____(JAN-MAR) ____(APR-JUNE) ____(JULY-SEPT) _X__(OCT-DEC)

Samples Collected By: Mallinckrodt

Analysis Performed By: TEKLAB

Part II: ANALYTICAL RESULTS OF SELF MONITORING

MSD SAMPLE POINT REFERENCE NUMBERS	----->		003		009		099	
DATES ON WHICH SAMPLES WERE COLLECTED	----->		10/20/2010		10/20/2010		calculated	
TIMES AT WHICH SAMPLES WERE COLLECTED	----->		0710, 0815, 0915, 1015		0735, 0835, 0935, 1035			
PARAMETER	LIMIT	RECORD SAMPLE TYPES (G,C,M OR E) & RESULTS BELOW G=grab,C=composite,M=measured flow,E=estimated flo						UNITS
FLOW	****	M	64,368	M	45,274		19,094	gal/day
1,1,1-Trichloroethane	****	G	<0.005	G	<0.005		0.005	mg/l
1,1,2,2-Tetrachloroethane	****	G	<0.005	G	<0.005		0.005	mg/l
1,1,2-Trichloroethane	****	G	<0.005	G	<0.005		0.005	mg/l
1,1-Dichloroethane	****	G	<0.005	G	<0.005		0.005	mg/l
1,1-Dichloroethene	****	G	<0.005	G	<0.005		0.005	mg/l
1,2-Dichlorobenzene	****	G	<0.005	G	<0.005		0.005	mg/l
1,2-Dichloroethane	****	G	<0.005	G	<0.005		0.005	mg/l
1,2-Dichloropropane	****	G	<0.005	G	<0.005		0.005	mg/l
1,3-Dichlorobenzene	****	G	<0.005	G	<0.005		0.005	mg/l
1,4-Dichlorobenzene	****	G	<0.005	G	<0.005		0.005	mg/l
2-Chloroethylvinylether	****	G	<0.020	G	<0.020		0.020	mg/l
Acrolein	****	G	<0.1	G	<0.1		0.100	mg/l
Acrylonitrile	****	G	<0.005	G	<0.005		0.005	mg/l
Benzene	****	G	<0.002	G	<0.002		0.002	mg/l
Bromodichloromethane	****	G	0.0011	G	0.0015		0.001	mg/l
Bromoform	****	G	<0.005	G	<0.005		0.005	mg/l
Bromomethane	****	G	<0.010	G	<0.010		0.010	mg/l
Carbon Tetrachloride	****	G	<0.005	G	<0.005		0.005	mg/l
Chlorobenzene	****	G	<0.005	G	<0.005		0.005	mg/l
Chloroethane	****	G	<0.010	G	<0.010		0.010	mg/l
Chloroform	****	G	0.0071	G	0.0073		0.007	mg/l
Chloromethane	****	G	<0.010	G	<0.010		0.010	mg/l
cis-1,3-Dicholropropene	****	G	<0.005	G	<0.005		0.005	mg/l
Dibromochloromethane	****	G	<0.005	G	<0.005		0.005	mg/l
Ethylbenzene	****	G	<0.005	G	<0.005		0.005	mg/l
Methylene Chloride	****	G	<0.005	G	<0.005		0.005	mg/l
Tetrachloroethene	****	G	<0.005	G	<0.005		0.005	mg/l
Toluene	****	G	<0.002	G	<0.002		0.002	mg/l
1,2-Dichloroethene	****	G	<0.005	G	<0.005		0.005	mg/l
trans-1,3-Dichloropropene	****	G	<0.005	G	<0.005		0.005	mg/l
Trichloroethene	****	G	0.0028	G	<0.005		0*	mg/l
Vinyl Chloride	****	G	0.0017	G	<0.002		0*	mg/l
1,2,4-Trichlorobenzene	****	G	<0.008	G	<0.008		0.008	mg/l
2,4,6-Trichlorophenol	****	G	<0.008	G	<0.008		0.008	mg/l
2,4-Dichlorophenol	****	G	<0.008	G	<0.008		0.008	mg/l
2,4-Dimethylphenol	****	G	<0.008	G	<0.008		0.008	mg/l
2,4-Dinitrophenol	****	G	<0.016	G	<0.016		0.016	mg/l
2,4-Dinitrotoluene	****	G	<0.008	G	<0.008		0.008	mg/l
2,6-Dinitrotoluene	****	G	<0.008	G	<0.008		0.008	mg/l
2-Chloronapthalene	****	G	<0.008	G	<0.008		0.008	mg/l
2-Chlorophenol	****	G	<0.008	G	<0.008		0.008	mg/l
2-Nitrophenol	****	G	<0.016	G	<0.016		0.016	mg/l
3,3-Dichlorobenzidine	****	G	<0.008	G	<0.008		0.008	mg/l
2-Methyl-4,6-dinitrophenol	****	G	<0.016	G	<0.016		0.016	mg/l
4-Bromophenyl-phenylether	****	G	<0.008	G	<0.008		0.008	mg/l
4-Chloro-3-methylphenol	****	G	<0.016	G	<0.016		0.016	mg/l
4-Chlorophenyl-phenylether	****	G	<0.008	G	<0.008		0.008	mg/l
4-Nitrophenol	****	G	<0.016	G	<0.016		0.016	mg/l
Acenapthene	****	G	<0.008	G	<0.008		0.008	mg/l
Acenaphthylene	****	G	<0.008	G	<0.008		0.008	mg/l
Anthracene	****	G	<0.008	G	<0.008		0.008	mg/l
Benzidine	****	G	<0.032	G	<0.031		0.034	mg/l

RECEIVED
ENVIRONMENTAL COMPLIANCE

METROPOLITAN ST. LOUIS SEWER DISTRICT
2010 INDUSTRIAL USER SELF MONITORING REPORT

PART I: IDENTIFYING INFORMATION

Company Name: **Mallinckrodt Inc.**

Permit No.: 2112059600 - 3 Effective Date: 06-01-2010 Expiration Date: 05-31-2015

Premise Address: 3600 North Second St., St. Louis, MO 63147

Monitoring Period: _____(JAN-MAR) ____(APR-JUNE) ____(JULY-SEPT) _X__(OCT-DEC)

Samples Collected By: Mallinckrodt

Analysis Performed By: TEKLAB

Part II: ANALYTICAL RESULTS OF SELF MONITORING

MSD SAMPLE POINT REFERENCE NUMBERS	----->		003		009		099	
DATES ON WHICH SAMPLES WERE COLLECTED	----->		10/20/2010		10/20/2010		calculated	
TIMES AT WHICH SAMPLES WERE COLLECTED	----->		0710, 0815, 0915, 1015		0735, 0835, 0935, 1035			
PARAMETER	LIMIT	RECORD SAMPLE TYPES (G,C,M OR E) & RESULTS BELOW G=grab,C=composite,M=measured flow,E=estimated flo						UNITS
FLOW	****	M	64,368	M	45,274		19,094	gal/day
Benzo(a)anthracene	****	G	<0.008	G	<0.008		0.008	mg/l
Benzo(a)pyrene	****	G	<0.008	G	<0.008		0.008	mg/l
Benzo(b)fluoranthene	****	G	<0.008	G	<0.008		0.008	mg/l
Benzo(g,h,i)perylene	****	G	<0.008	G	<0.008		0.008	mg/l
Benzo(k)fluoranthene	****	G	<0.008	G	<0.008		0.008	mg/l
Bis(2-chloroethoxy)methane	****	G	<0.008	G	<0.008		0.008	mg/l
Bis(2-chloroethyl)ether	****	G	<0.008	G	<0.008		0.008	mg/l
Bis(2-chloroisopropyl)ether	****	G	<0.008	G	<0.008		0.008	mg/l
Bis(2-ethylhexyl)phthalate	****	G	<0.005	G	<0.005		0.005	mg/l
Butyl benzyl phthalate	****	G	<0.008	G	<0.008		0.008	mg/l
Chrysene	****	G	<0.008	G	<0.008		0.008	mg/l
Dibenzo(a,h)anthracene	****	G	<0.008	G	<0.008		0.008	mg/l
Diethyl phthalate	****	G	<0.008	G	<0.008		0.008	mg/l
Dimethyl phthalate	****	G	<0.008	G	<0.008		0.008	mg/l
Di-n-butyl phthalate	****	G	<0.008	G	<0.008		0.008	mg/l
Di-n-octyl-phthalate	****	G	<0.008	G	<0.008		0.008	mg/l
Fluorene	****	G	<0.008	G	<0.008		0.008	mg/l
Fluoranthene	****	G	<0.008	G	<0.008		0.008	mg/l
Hexachlorobenzene	****	G	<0.008	G	<0.008		0.008	mg/l
Hexachlorobutadiene	****	G	<0.008	G	<0.008		0.008	mg/l
Hexachlorocyclopentadiene	****	G	<0.016	G	<0.016		0.016	mg/l
Hexachloroethane	****	G	<0.008	G	<0.008		0.008	mg/l
Ideno(1,2,3-cd)pyrene	****	G	<0.008	G	<0.008		0.008	mg/l
Isophorone	****	G	<0.008	G	<0.008		0.008	mg/l
Naphthalene	****	G	<0.008	G	<0.008		0.008	mg/l
Nitrobenzene	****	G	<0.008	G	<0.008		0.008	mg/l
N-nitrosodimethylamine	****	G	<0.016	G	<0.016		0.016	mg/l
N-nitrosodi-n-propylamine	****	G	<0.008	G	<0.008		0.008	mg/l
N-nitrosodiphenylamine	****	G	<0.008	G	<0.008		0.008	mg/l
Pentachlorophenol	****	G	<0.016	G	<0.016		0.016	mg/l
Phenanthrene	****	G	<0.008	G	<0.008		0.008	mg/l
Phenol	****	G	<0.004	G	<0.004		0.004	mg/l
Pyrene	****	G	<0.008	G	<0.008		0.008	mg/l
1,2-Diphenylhydrazine	****	G	<0.008	G	<0.008		0.008	mg/l
* If calculated number was negative, it was reported as 0.								
Total Toxic Organics	****	--	0.775	--	0.786	--	0.782	mg/l
**** No limits for SP003 or SP009;								
monitoring requirement only for calculation at SP099								
Lab Dilution Factor			1, 2		1			

RECEIVED
JAN 27 2011
DIVISION OF
ENVIRONMENTAL COMPLIANCE

METROPOLITAN ST. LOUIS SEWER DISTRICT
2010 INDUSTRIAL USER SELF MONITORING REPORT

PART I: IDENTIFYING INFORMATION

Company Name: **Mallinckrodt Inc.**

Permit No.: 2112059600 - 3 Effective Date: 06-01-2010 Expiration Date: 05-31-2015

Premise Address: 3600 North Second St., St. Louis, MO 63147

Monitoring Period: _____(JAN-MAR) _____(APR-JUNE) _____(JULY-SEPT) __X__(OCT-DEC)

Samples Collected By: Mallinckrodt

Analysis Performed By: TEKLAB

Part II: ANALYTICAL RESULTS OF SELF MONITORING

MSD SAMPLE POINT REFERENCE NUMBERS	----->		005						
DATES ON WHICH SAMPLES WERE COLLECTED	----->		10/20/2010						
TIMES AT WHICH SAMPLES WERE COLLECTED	----->		0715, 0820, 0920, 1020						
PARAMETER	LIMIT	RECORD SAMPLE TYPES (G,C,M OR E) & RESULTS BELOW G=grab,C=composite,M=measured flow,E=estimated fl							UNITS
FLOW		E	32,000						gal/day
Oil & Grease	200	G	<5						mg/l
Biochemical Oxygen Demand	****	C	137						mg/l
Chemical Oxygen Demand	****	C	169						mg/l
Total Suspended Solids	****	C	12						mg/l
Temperature	60	G	23						deg C
pH	5.5 - 11.5	G	6.0						S.U.
Lab Dilution Factor			1						

RECEIVED
JAN 27 2011
DIVISION OF
ENVIRONMENTAL COMPLIANCE

METROPOLITAN ST. LOUIS SEWER DISTRICT
2010 INDUSTRIAL USER SELF MONITORING REPORT

PART I: IDENTIFYING INFORMATION

Company Name: **Mallinckrodt Inc.**

Permit No.: 2112059600 - 3 Effective Date: 06-01-2010 Expiration Date: 05-31-2015

Premise Address: 3600 North Second St., St. Louis, MO 63147

Monitoring Period: ____(JAN-MAR) ____(APR-JUNE) ____(JULY-SEPT) __X__(OCT-DEC)

Samples Collected By: Mallinckrodt

Analysis Performed By: TEKLAB

Part II: ANALYTICAL RESULTS OF SELF MONITORING

MSD SAMPLE POINT REFERENCE NUMBERS	----->		005					
DATES ON WHICH SAMPLES WERE COLLECTED	----->		10/20/2010					
TIMES AT WHICH SAMPLES WERE COLLECTED	----->		0715, 0820, 0920, 1020					
PARAMETER	LIMIT	RECORD SAMPLE TYPES (G,C,M OR E) & RESULTS BELOW G=grab,C=composite,M=measured flow,E=estimated flo						UNITS
FLOW		E	32,000					gal/day
1,1,1-Trichloroethane		G	<0.005					mg/l
1,1,2,2-Tetrachloroethane		G	<0.005					mg/l
1,1,2-Trichloroethane		G	<0.005					mg/l
1,1-Dichloroethane		G	<0.005					mg/l
1,1-Dichloroethene		G	<0.005					mg/l
1,2-Dichlorobenzene		G	<0.005					mg/l
1,2-Dichloroethane		G	<0.005					mg/l
1,2-Dichloropropane		G	<0.005					mg/l
1,3-Dichlorobenzene		G	<0.005					mg/l
1,4-Dichlorobenzene		G	<0.005					mg/l
2-Chloroethylvinylether		G	<0.020					mg/l
Acrolein		G	<0.100					mg/l
Acrylonitrile		G	<0.005					mg/l
Benzene		G	<0.002					mg/l
Bromodichloromethane		G	<0.005					mg/l
Bromoform		G	<0.005					mg/l
Bromomethane		G	<0.010					mg/l
Carbon Tetrachloride		G	<0.005					mg/l
Chlorobenzene		G	<0.005					mg/l
Chloroethane		G	<0.010					mg/l
Chloroform		G	<0.005					mg/l
Chloromethane		G	<0.010					mg/l
cis-1,3-Dicholropropene		G	<0.005					mg/l
Dibromochloromethane		G	<0.005					mg/l
Ethylbenzene		G	<0.005					mg/l
Methylene Chloride		G	<0.005					mg/l
Tetrachloroethene		G	<0.005					mg/l
Toluene		G	<0.002					mg/l
trans-1,2-Dichloroethene		G	<0.005					mg/l
trans-1,3-Dichloropropene		G	<0.005					mg/l
Trichloroethene		G	<0.005					mg/l
Vinyl Chloride		G	<0.002					mg/l
1,2,4-Trichlorobenzene		G	<0.008					mg/l
2,4,6-Trichlorophenol		G	<0.008					mg/l
2,4-Dichlorophenol		G	<0.008					mg/l
2,4-Dimethylphenol		G	<0.008					mg/l
2,4-Dinitrophenol		G	<0.016					mg/l
2,4-Dinitrotoluene		G	<0.008					mg/l
2,6-Dinitrotoluene		G	<0.008					mg/l
2-Chloronapthalene		G	<0.008					mg/l
2-Chlorophenol		G	<0.008					mg/l
2-Nitrophenol		G	<0.016					mg/l
3,3-Dichlorobenzidine		G	<0.008					mg/l
2-Methyl-4,6-dinitrophenol		G	<0.016					mg/l
4-Bromophenyl-phenylether		G	<0.008					mg/l
4-Chloro-3-methylphenol		G	<0.016					mg/l
4-Chlorophenyl-phenylether		G	<0.008					mg/l
4-Nitrophenol		G	<0.016					mg/l
Acenapthene		G	<0.008					mg/l
Acenaphthylene		G	<0.008					mg/l
Anthracene		G	<0.008					mg/l
Benzidine		G	<0.031					mg/l

RECEIVED
JAN 2011
DIVISION OF
ENVIRONMENTAL COMPLIANCE

METROPOLITAN ST. LOUIS SEWER DISTRICT
2010 INDUSTRIAL USER SELF MONITORING REPORT

PART I: IDENTIFYING INFORMATION

Company Name: **Mallinckrodt Inc.**

Permit No.: 2112059600 - 3 Effective Date: 06-01-2010 Expiration Date: 05-31-2015

Premise Address: 3600 North Second St., St. Louis, MO 63147

Monitoring Period: ____(JAN-MAR) ____(APR-JUNE) ____(JULY-SEPT) __X__(OCT-DEC)

Samples Collected By: Mallinckrodt

Analysis Performed By: TEKLAB

Part II: ANALYTICAL RESULTS OF SELF MONITORING

MSD SAMPLE POINT REFERENCE NUMBERS	----->		005					
DATES ON WHICH SAMPLES WERE COLLECTED	----->		10/20/2010					
TIMES AT WHICH SAMPLES WERE COLLECTED	----->		0715, 0820, 0920, 1020					
PARAMETER	LIMIT	RECORD SAMPLE TYPES (G,C,M OR E) & RESULTS BELOW G=grab,C=composite,M=measured flow,E=estimated flo						UNITS
FLOW		E	32,000					gal/day
Benzo(a)anthracene		G	<0.008					mg/l
Benzo(a)pyrene		G	<0.008					mg/l
Benzo(b)fluoranthene		G	<0.008					mg/l
Benzo(g,h,i)perylene		G	<0.008					mg/l
Benzo(k)fluoranthene		G	<0.008					mg/l
Bis(2-chloroethoxy)methane		G	<0.008					mg/l
Bis(2-chloroethyl)ether		G	<0.008					mg/l
Bis(2-chloroisopropyl)ether		G	<0.008					mg/l
Bis(2-ethylhexyl)phthalate		G	<0.005					mg/l
Butyl benzyl phthalate		G	<0.008					mg/l
Chrysene		G	<0.008					mg/l
Dibenzo(a,h)anthracene		G	<0.008					mg/l
Diethyl phthalate		G	<0.008					mg/l
Dimethyl phthalate		G	<0.008					mg/l
Di-n-butyl phthalate		G	<0.008					mg/l
Di-n-octyl-phthalate		G	<0.008					mg/l
Fluoranthene		G	<0.008					mg/l
Fluorene		G	<0.008					mg/l
Hexachlorobenzene		G	<0.008					mg/l
Hexachlorobutadiene		G	<0.008					mg/l
Hexachlorocyclopentadiene		G	<0.016					mg/l
Hexachloroethane		G	<0.008					mg/l
Ideno(1,2,3-cd)pyrene		G	<0.008					mg/l
Isophorone		G	<0.008					mg/l
Naphthalene		G	<0.008					mg/l
Nitrobenzene		G	<0.008					mg/l
N-nitrosodimethylamine		G	<0.016					mg/l
N-nitrosodi-n-propylamine		G	<0.008					mg/l
N-nitrosodiphenylamine		G	<0.008					mg/l
Pentachlorophenol		G	<0.016					mg/l
Phenanthrene		G	<0.008					mg/l
Phenol		G	<0.008					mg/l
Pyrene		G	<0.008					mg/l
1,2-Diphenylhydrazine		G	<0.008					mg/l
Total Toxic Organics	5.844	--	0.792					mg/l
Lab Dilution Factor			1					

RECEIVED
JAN 27 2011
DIVISION OF
ENVIRONMENTAL COMPLIANCE

METROPOLITAN ST. LOUIS SEWER DISTRICT
2010 INDUSTRIAL USER SELF MONITORING REPORT

PART I: IDENTIFYING INFORMATION

Company Name: **Mallinckrodt Inc.**

Permit No.: 2112059600 - 3 Effective Date: 06-01-2010 Expiration Date: 05-31-2015

Premise Address: 3600 North Second St., St. Louis, MO 63147

Monitoring Period: ____(JAN-MAR) ____(APR-JUNE) ____(JULY-SEPT) __X__(OCT-DEC)

Samples Collected By: Mallinckrodt

Analysis Performed By: TEKLAB

Part II: ANALYTICAL RESULTS OF SELF MONITORING

MSD SAMPLE POINT REFERENCE NUMBERS	----->		008					
DATES ON WHICH SAMPLES WERE COLLECTED	----->							
TIMES AT WHICH SAMPLES WERE COLLECTED	----->							
PARAMETER	LIMIT	RECORD SAMPLE TYPES (G,C,M OR E) & RESULTS BELOW G=grab,C=composite,M=measured flow,E=estimated flo						UNITS
FLOW		E	*					gal/day
Oil & Grease	200	G						mg/l
Biochemical Oxygen Demand	****	G						mg/l
Chemical Oxygen Demand	****	G						mg/l
Temperature	60	G						deg C
Total Suspended Solids	****	G						mg/L
pH	5.5 - 11.5	G						S.U.
* No flow during this reporting period.								
Lab Dilution Factor								

RECEIVED
JAN 27 2011
DIVISION OF
ENVIRONMENTAL COMPLIANCE

METROPOLITAN ST. LOUIS SEWER DISTRICT
2010 INDUSTRIAL USER SELF MONITORING REPORT

PART I: IDENTIFYING INFORMATION

Company Name: **Mallinckrodt Inc.**

Permit No.: 2112059600 - 3 Effective Date: 06-01-2010 Expiration Date: 05-31-2015

Premise Address: 3600 North Second St., St. Louis, MO 63147

Monitoring Period: ____(JAN-MAR) ____(APR-JUNE) ____(JULY-SEPT) __X__(OCT-DEC)

Samples Collected By: Mallinckrodt

Analysis Performed By: TEKLAB

Part II: ANALYTICAL RESULTS OF SELF MONITORING

MSD SAMPLE POINT REFERENCE NUMBERS	----->		010					
DATES ON WHICH SAMPLES WERE COLLECTED	----->		10/20/2010					
TIMES AT WHICH SAMPLES WERE COLLECTED	----->		0750, 0850, 0950, 1050					
PARAMETER	LIMIT	RECORD SAMPLE TYPES (G,C,M OR E) & RESULTS BELOW G=grab,C=composite,M=measured flow,E=estimated flo						UNITS
FLOW		E	1,142,913					gal/day
Oil & Grease	200	G	<5					mg/l
Biochemical Oxygen Demand	****	C	380					mg/l
Chemical Oxygen Demand	****	C	518					mg/l
Total Suspended Solids	****	C	46					mg/l
Temperature	60	G	31					deg C
pH	5.5 - 11.5	G	see attached					S.U.
Chromium	5.0	C	0.007					mg/l
Copper	2.7	C	0.025					mg/l
Nickel	2.3	C	0.030					mg/l
Zinc	3.0	C	0.025					mg/l
Lab Dilution Factor			1					

RECEIVED
JAN 27 2011
DIVISION OF
ENVIRONMENTAL COMPLIANCE

METROPOLITAN ST. LOUIS SEWER DISTRICT
2010 INDUSTRIAL USER SELF MONITORING REPORT

PART I: IDENTIFYING INFORMATION

Company Name: **Mallinckrodt Inc.**

Permit No.: 2112059600 - 3 Effective Date: 06-01-2010 Expiration Date: 05-31-2015

Premise Address: 3600 North Second St., St. Louis, MO 63147

Monitoring Period: ____(JAN-MAR) ____(APR-JUNE) ___(JULY-SEPT) __X__(OCT-DEC)

Samples Collected By: Mallinckrodt

Analysis Performed By: TEKLAB

Part II: ANALYTICAL RESULTS OF SELF MONITORING

MSD SAMPLE POINT REFERENCE NUMBERS	----->		010					
DATES ON WHICH SAMPLES WERE COLLECTED	----->		10/20/2010					
TIMES AT WHICH SAMPLES WERE COLLECTED	----->		0750, 0850, 0950, 1050					
		RECORD SAMPLE TYPES (G,C,M OR E) & RESULTS BELOW						
PARAMETER	LIMIT	G=grab,C=composite,M=measured flow,E=estimated flo						UNITS
FLOW		E	1,142,913	E		E		gal/day
1,1,1-Trichloroethane		G	<0.005	G		G		mg/l
1,1,2,2-Tetrachloroethane		G	<0.005	G		G		mg/l
1,1,2-Trichloroethane		G	<0.005	G		G		mg/l
1,1-Dichloroethane		G	<0.005	G		G		mg/l
1,1-Dichloroethene		G	<0.005	G		G		mg/l
1,2-Dichlorobenzene		G	<0.005	G		G		mg/l
1,2-Dichloroethane		G	<0.005	G		G		mg/l
1,2-Dichloropropane		G	<0.005	G		G		mg/l
1,3-Dichlorobenzene		G	<0.005	G		G		mg/l
1,4-Dichlorobenzene		G	<0.005	G		G		mg/l
2-Chloroethylvinylether		G	<0.020	G		G		mg/l
Acrolein		G	<0.100	G		G		mg/l
Acrylonitrile		G	<0.005	G		G		mg/l
Benzene		G	<0.002	G		G		mg/l
Bromodichloromethane		G	<0.005	G		G		mg/l
Bromoform		G	<0.005	G		G		mg/l
Bromomethane		G	<0.010	G		G		mg/l
Carbon Tetrachloride		G	<0.005	G		G		mg/l
Chlorobenzene		G	<0.005	G		G		mg/l
Chloroethane		G	<0.010	G		G		mg/l
Chloroform		G	0.006	G		G		mg/l
Chloromethane		G	<0.010	G		G		mg/l
cis-1,3-Dicholropropene		G	<0.005	G		G		mg/l
Dibromochloromethane		G	<0.005	G		G		mg/l
Ethylbenzene		G	<0.005	G		G		mg/l
Methylene Chloride		G	<0.005	G		G		mg/l
Tetrachloroethene		G	<0.005	G		G		mg/l
Toluene		G	<0.002	G		G		mg/l
trans-1,2-Dichloroethene		G	<0.005	G		G		mg/l
trans-1,3-Dichloropropene		G	<0.005	G		G		mg/l
Trichloroethene		G	<0.005	G		G		mg/l
Vinyl Chloride		G	<0.002	G		G		mg/l
1,2,4-Trichlorobenzene		G	<0.008	G		G		mg/l
2,4,6-Trichlorophenol		G	<0.008	G		G		mg/l
2,4-Dichlorophenol		G	<0.008	G		G		mg/l
2,4-Dimethylphenol		G	<0.008	G		G		mg/l
2,4-Dinitrophenol		G	<0.016	G		G		mg/l
2,4-Dinitrotoluene		G	<0.008	G		G		mg/l
2,6-Dinitrotoluene		G	<0.008	G		G		mg/l
2-Chloronapthalene		G	<0.008	G		G		mg/l
2-Chlorophenol		G	<0.008	G		G		mg/l
2-Nitrophenol		G	<0.016	G		G		mg/l
3,3-Dichlorobenzidine		G	<0.008	G		G		mg/l
2-Methyl-4,6-dinitrophenol		G	<0.016	G		G		mg/l
4-Bromophenyl-phenylether		G	<0.008	G		G		mg/l
4-Chloro-3-methylphenol		G	<0.016	G		G		mg/l
4-Chlorophenyl-phenylether		G	<0.008	G		G		mg/l
4-Nitrophenol		G	<0.016	G		G		mg/l
Acenapthene		G	<0.008	G		G		mg/l
Acenaphthylene		G	<0.008	G		G		mg/l
Anthracene		G	<0.008	G		G		mg/l
Benzidine		G	<0.031	G		G		mg/l

RECEIVED
JAN 2011
DIVISION OF
ENVIRONMENTAL COMPLIANCE

METROPOLITAN ST. LOUIS SEWER DISTRICT
2010 INDUSTRIAL USER SELF MONITORING REPORT

PART I: IDENTIFYING INFORMATION

Company Name: **Mallinckrodt Inc.**

Permit No.: 2112059600 - 3 Effective Date: 06-01-2010 Expiration Date: 05-31-2015

Premise Address: 3600 North Second St., St. Louis, MO 63147

Monitoring Period: ____(JAN-MAR) ____(APR-JUNE) ___(JULY-SEPT) __X__(OCT-DEC)

Samples Collected By: Mallinckrodt

Analysis Performed By: TEKLAB

Part II: ANALYTICAL RESULTS OF SELF MONITORING

MSD SAMPLE POINT REFERENCE NUMBERS	----->		010					
DATES ON WHICH SAMPLES WERE COLLECTED	----->		10/20/2010					
TIMES AT WHICH SAMPLES WERE COLLECTED	----->		0750, 0850, 0950, 1050					
PARAMETER	LIMIT	RECORD SAMPLE TYPES (G,C,M OR E) & RESULTS BELOW G=grab,C=composite,M=measured flow,E=estimated flo						UNITS
FLOW		E	1,142,913	E		E		gal/day
Benzo(a)anthracene		G	<0.008	G		G		mg/l
Benzo(a)pyrene		G	<0.008	G		G		mg/l
Benzo(b)fluoranthene		G	<0.008	G		G		mg/l
Benzo(g,h,i)perylene		G	<0.008	G		G		mg/l
Benzo(k)fluoranthene		G	<0.008	G		G		mg/l
Bis(2-chloroethoxy)methane		G	<0.008	G		G		mg/l
Bis(2-chloroethyl)ether		G	0.022	G		G		mg/l
Bis(2-chloroisopropyl)ether		G	<0.008	G		G		mg/l
Bis(2-ethylhexyl)phthalate		G	<0.005	G		G		mg/l
Butyl benzyl phthalate		G	<0.008	G		G		mg/l
Chrysene		G	<0.008	G		G		mg/l
Dibenzo(a,h)anthracene		G	<0.008	G		G		mg/l
Diethyl phthalate		G	<0.008	G		G		mg/l
Dimethyl phthalate		G	<0.008	G		G		mg/l
Di-n-butyl phthalate		G	<0.008	G		G		mg/l
Di-n-octyl-phthalate		G	<0.008	G		G		mg/l
Fluoranthene		G	<0.008	G		G		mg/l
Fluorene		G	<0.008	G		G		mg/l
Hexachlorobenzene		G	<0.008	G		G		mg/l
Hexachlorobutadiene		G	<0.008	G		G		mg/l
Hexachlorocyclopentadiene		G	<0.016	G		G		mg/l
Hexachloroethane		G	<0.008	G		G		mg/l
Ideno(1,2,3-cd)pyrene		G	<0.008	G		G		mg/l
Isophorone		G	<0.008	G		G		mg/l
Naphthalene		G	<0.008	G		G		mg/l
Nitrobenzene		G	<0.008	G		G		mg/l
N-nitrosodimethylamine		G	<0.016	G		G		mg/l
N-nitrosodi-n-propylamine		G	<0.008	G		G		mg/l
N-nitrosodiphenylamine		G	<0.008	G		G		mg/l
Pentachlorophenol		G	<0.016	G		G		mg/l
Phenanthrene		G	<0.008	G		G		mg/l
Phenol		G	<0.004	G		G		mg/l
Pyrene		G	<0.008	G		G		mg/l
1,2-Diphenylhydrazine		G	<0.008	G		G		mg/l
Total Toxic Organics	5.844	--	1.051					mg/l
Lab Dilution Factor			1					

RECEIVED
JAN 27 2011
DIVISION OF
ENVIRONMENTAL COMPLIANCE

Mallinckrodt pH Monitoring for SP010: October, 2010

Date / Time	pH	Total for Event in Minutes
05-Oct-10 16:40:00	5.3	5
05-Oct-10 17:25:00	5.4	5
10-Oct-10 13:40:00	4.8	5
18-Oct-10 09:40:00	4.6	5
20-Oct-10 08:55:00	4.3	5
21-Oct-10 15:35:00	4.9	
21-Oct-10 15:40:00	5.2	10
21-Oct-10 17:25:00	5.3	5
23-Oct-10 00:20:00	5.4	5
27-Oct-10 10:55:00	11.6	5
	October Total	**50**

Mallinckrodt pH Monitoring for SP010: November, 2010

Date / Time	pH	Total for Event in Minutes
04-Nov-10 10:05:00	5.1	5
05-Nov-10 07:10:00	11.6	
05-Nov-10 07:15:00	11.7	
05-Nov-10 07:20:00	11.8	
05-Nov-10 07:25:00	11.8	
05-Nov-10 07:30:00	11.7	
05-Nov-10 07:35:00	11.5	25
12-Nov-10 10:35:00	5.1	5
13-Nov-10 08:05:00	5.1	
13-Nov-10 08:10:00	4.9	
13-Nov-10 08:15:00	4.3	10
29-Nov-10 16:55:00	11.6	
29-Nov-10 17:00:00	11.6	
29-Nov-10 17:05:00	11.5	10
29-Nov-10 17:20:00	5.3	
29-Nov-10 17:25:00	4.5	
29-Nov-10 17:30:00	5.0	10
	November Total:	**65**

RECEIVED
JAN 27 2011
DIVISION OF
ENVIRONMENTAL COMPLIANCE

Mallinckrodt pH Monitoring for SP010: December, 2010

Date / Time	pH	Total for Event in Minutes
03-Dec-10 10:45:00	5.0	
03-Dec-10 10:50:00	4.0	10
13-Dec-10 14:45:00	5.4	5
13-Dec-10 14:50:00	5.5	5
19-Dec-10 12:25:00	4.8	5
21-Dec-10 10:00:00	4.8	5
22-Dec-10 11:40:00	11.9	
22-Dec-10 11:45:00	11.9	
22-Dec-10 11:50:00	11.9	
22-Dec-10 11:55:00	11.9	
22-Dec-10 12:00:00	11.9	
22-Dec-10 12:05:00	11.7	
22-Dec-10 12:10:00	11.6	30
22-Dec-10 12:20:00	11.6	
22-Dec-10 12:25:00	11.8	
22-Dec-10 12:30:00	12.0	
22-Dec-10 12:35:00	12.0	20
22-Dec-10 12:40:00 —	12.0	
22-Dec-10 12:45:00	11.9	
22-Dec-10 12:50:00	11.9	
22-Dec-10 12:55:00	11.9	
22-Dec-10 13:00:00	11.9	
22-Dec-10 13:05:00	11.9	
22-Dec-10 13:10:00	11.8	
22-Dec-10 13:15:00	11.8	
22-Dec-10 13:20:00	11.8	
22-Dec-10 13:25:00	11.8	
22-Dec-10 13:30:00	11.8	
22-Dec-10 13:35:00	11.7	
22-Dec-10 13:40:00	11.7	
22-Dec-10 13:45:00	11.7	
22-Dec-10 13:50:00	11.7	
22-Dec-10 13:55:00 —	11.6	80 ← NOV. Reported on 12-23-2010, but not sent
22-Dec-10 14:00:00	11.5	
22-Dec-10 14:35:00	11.7	
22-Dec-10 14:40:00	11.9	
22-Dec-10 14:45:00	11.8	15
22-Dec-10 14:55:00	11.6	5
22-Dec-10 16:00:00	11.6	
22-Dec-10 16:05:00	11.8	
22-Dec-10 16:10:00	11.7	
22-Dec-10 16:15:00	11.6	

RECEIVED
JAN 27 2011
DIVISION OF
ENVIRONMENTAL COMPLIANCE

22-Dec-10 16:20:00	11.5	25
22-Dec-10 18:35:00	5.2	
22-Dec-10 18:40:00	4.7	10
22-Dec-10 19:20:00	3.7	5
23-Dec-10 09:55:00	3.0	5
25-Dec-10 11:55:00	11.7	5
26-Dec-10 00:35:00	2.8	
26-Dec-10 00:40:00	5.0	
26-Dec-10 00:45:00	3.1	15
26-Dec-10 01:05:00	5.2	5
26-Dec-10 01:15:00	5.0	5
26-Dec-10 21:40:00	11.8	
26-Dec-10 21:45:00	11.6	10
26-Dec-10 21:55:00	2.7	
26-Dec-10 22:00:00	5.4	
26-Dec-10 22:05:00	5.3	15
26-Dec-10 23:05:00	4.9	
26-Dec-10 23:10:00	2.6	
26-Dec-10 23:15:00	3.3	15
27-Dec-10 00:05:00	11.8	
27-Dec-10 00:10:00	11.7	
27-Dec-10 00:15:00	11.6	15
27-Dec-10 03:40:00	5.2	5
27-Dec-10 04:05:00	11.6	
27-Dec-10 04:10:00	11.6	10
27-Dec-10 10:15:00	5.0	5
27-Dec-10 14:35:00	4.9	5
27-Dec-10 15:15:00	4.1	5
27-Dec-10 15:50:00	5.3	
27-Dec-10 15:55:00	5.4	10
28-Dec-10 09:00:00	5.2	5
28-Dec-10 09:10:00	11.7	5
29-Dec-10 00:50:00	5.2	
29-Dec-10 00:55:00	4.9	10
29-Dec-10 20:25:00	4.1	
29-Dec-10 20:30:00	3.8	10
30-Dec-10 08:35:00	11.9	
30-Dec-10 08:40:00	12.0	
30-Dec-10 08:45:00	12.0	
30-Dec-10 08:50:00	12.0	
30-Dec-10 08:55:00	12.0	
30-Dec-10 09:00:00	11.9	30
30-Dec-10 09:10:00	11.6	
30-Dec-10 09:15:00	11.6	
30-Dec-10 09:20:00	11.5	15
	December Total:	**425**

RECEIVED
JAN 27 2011
DIVISION OF
ENVIRONMENTAL COMPLIANCE

METROPOLITAN ST. LOUIS SEWER DISTRICT
2010 INDUSTRIAL USER SELF MONITORING REPORT

PART I: IDENTIFYING INFORMATION

Company Name: **Mallinckrodt Inc.**

Permit No.: 2112059600 - 3 Effective Date: 06-01-2010 Expiration Date: 05-31-2015

Premise Address: 3600 North Second St., St. Louis, MO 63147

Monitoring Period: ___(JAN-MAR) ____(APR-JUNE) ____(JULY-SEPT) __X__(OCT-DEC)

Samples Collected By: Mallinckrodt

Analysis Performed By: TEKLAB

Part II: ANALYTICAL RESULTS OF SELF MONITORING

MSD SAMPLE POINT REFERENCE NUMBERS	----->		011						
DATES ON WHICH SAMPLES WERE COLLECTED	----->		11/16/2010						
TIMES AT WHICH SAMPLES WERE COLLECTED	----->		1040						
PARAMETER	LIMIT	RECORD SAMPLE TYPES (G,C,M OR E) & RESULTS BELOW G=grab,C=composite,M=measured flow,E=estimated flo							UNITS
FLOW		E	14,000						gal/day
Oil & Grease	200	G	<6						mg/l
Biochemical Oxygen Demand	****	G	56						mg/l
Chemical Oxygen Demand	****	G	1,340						mg/l
Total Suspended Solids	****	G	7						mg/l
Temperature	60	G	19.0						deg C
pH	5.5 - 11.5	G	7.7						S.U.
Lab Dilution Factor			1						

RECEIVED
JAN 27 2011
DIVISION OF
ENVIRONMENTAL COMPLIANC

METROPOLITAN ST. LOUIS SEWER DISTRICT
2010 INDUSTRIAL USER SELF MONITORING REPORT

PART I: IDENTIFYING INFORMATION

Company Name: **Mallinckrodt Inc.**

Permit No.: 2112059600 - 3 Effective Date: 06-01-2010 Expiration Date: 05-31-2015

Premise Address: 3600 North Second St., St. Louis, MO 63147
Monitoring Period: _____(JAN-MAR) _____(APR-JUN) _____(JULY-SEP) _X_(OCT-DEC)
Samples Collected By: Mallinckrodt Inc
Analysis Performed By: TEKLAB

Part II: ANALYTICAL RESULTS OF SELF MONITORING

MSD SAMPLE POINT REFERENCE NUMBERS					**080**						
DATES ON WHICH SAMPLES WERE COLLECTED					12/9/2010						
TIMES AT WHICH SAMPLES WERE COLLECTED					1000, 1100, 1200, 1300						
PARAMETER	EPA METHOD	DAILY MAX	AVG MONTHLY	**RECORD SAMPLE TYPES (G, C, M OR E) & RESULTS** G=Grab, C-composite, M=measured flow, E=estimated							UNITS
FLOW				E	3,500						gal/day
Acetone	524.2	20.70	8.20	G	<1.000						mg/L
n-Amyl Acetate	1666	20.70	8.20	G	<0.100						mg/L
Benzene	524.2	3.00	0.70	G	0.036						mg/L
n-Butyl acetate	1666	20.70	8.20	G	<0.100						mg/L
Chlorobenzene	524.2	3.00	0.70	G	<0.100						mg/L
Chloroform	524.2	0.10	0.03	G	<0.100						mg/L
1,2-Dichlorobenzene	524.2	20.70	8.20	G	<0.100						mg/L
1,2-Dichloroethane	524.2	20.70	8.20	G	<0.100						mg/L
Diethyl amine	1671	255.00	100.00	G	<100						mg/L
Ethyl Acetate	1666	20.70	8.20	G	<0.200						mg/L
n-Heptane	1666	3.00	0.70	G	<0.200						mg/L
n-Hexane	1666	3.00	0.70	G	<0.200						mg/L
Isobutyraldehyde	1666	20.70	8.20	G	<0.200						mg/L
Isopropyl acetate	1666	20.70	8.20	G	<0.100						mg/L
Isopropyl ether	1666	20.70	8.20	G	<0.100						mg/L
Methylene chloride	524.2	3.00	0.70	G	<0.100						mg/L
Methyl formate	1666	20.70	8.20	G	<1.000						mg/L
4-Methyl-2-pentanone	1666	20.70	8.20	G	<0.200						mg/L
Tetrahydrofuran	1666	9.20	3.40	G	<0.400						mg/L
Toluene	524.2	0.30	0.20	G	<0.100						mg/L
Triethyl amine	1671	255.00	100.00	G	<80						mg/L
Xylenes	1666	3.00	0.70	G	<0.100						mg/L
Oil & Grease	1664	200		G	<5						mg/L
Biochemical Oxygen Demand		****		C	<5						mg/L
Chemical Oxygen Demand		****		C	24						mg/L
Total Suspended Solids		****		C	12						mg/L
Temperature		60		G	46.6						deg C
pH		5.5 - 11.5		G	9.5						S.U.
Dilution by lab					1,20						

RECEIVED
JAN 27 2011
DIVISION OF
ENVIRONMENTAL COMPLIANC

Sample Point 080 Building 98

Process/ Product	Pharmaceutical OCPSF Non-Regulated	Date Start	Date End	Wastewater Disposition	Wastewater Sample Date	OCPSF-Cyanide, Zinc, Lead	Pharmaceutical-Cyanide
Peptides							
Boc-Leuprolide (8050)	Pharmaceutical	11-29-10 12-06-10 12-13-10	11-29-10 12-09-10 12-14-10	Drum		n/a	No
		11-30-10 12-02-10 12-06-10 12-14-10 12-21-10	11-30-10 12-02-10 12-09-10 12-14-10 12-22-10	MSD	12/9/2010	n/a	No
Fmoc- Leuprolide (7970)	Pharmaceutical	10-04-10 10-07-10 10-10-10 10-12-10 10-24-10 11-01-10	10-04-10 10-08-10 10-10-10 10-17-10 10-29-10 11-02-10	Drum		n/a	No

RECEIVED
JAN 27 2011
DIVISION OF
ENVIRONMENTAL COMPLIANCE

METROPOLITAN ST. LOUIS SEWER DISTRICT
2010 INDUSTRIAL USER SELF MONITORING REPORT

PART I: IDENTIFYING INFORMATION

Company Name: **Mallinckrodt Inc.**

Permit No.: 2112059600 - 3 Effective Date: 06-01-2010 Expiration Date: 05-31-2015

Premise Address: 3600 North Second St., St. Louis, MO 63147

Monitoring Period: ____(JAN-MAR) _____ (APR-JUNE) _____(JULY-SEPT) __X__(OCT-DEC)

Samples Collected By: Mallinckrodt

Analysis Performed By: TEKLAB

Part II: ANALYTICAL RESULTS OF SELF MONITORING

MSD SAMPLE POINT REFERENCE NUMBERS		----->		905			
DATES ON WHICH SAMPLES WERE COLLECTED		----->		11/4/2010			
TIMES AT WHICH SAMPLES WERE COLLECTED		----->		13:45			
	MONTHLY LIMIT (ave)	DAILY MAX LIMIT	RECORD SAMPLE TYPES (G,C,M OR E) & RESULTS BELOW G=grab,C=composite,M=measured flow,E=estimated flow				
PARAMETER	(gm/day)	(gm/day)			Lab results mg/L		UNITS
FLOW			M	71989			gal/day
1,2,4-Trichlorobenzene	74	301	G	5.45	0.020		gm/day
1,2-Dichlorobenzene	74	301	G	1.36	0.005		gm/day
1,3-Dichlorobenzene	54	144	G	1.36	0.005		gm/day
1,4-Dichlorobenzene	54	144	G	1.36	0.005		gm/day
2-Nitrophenol	25	87	G	1.36	0.005		gm/day
2-Methyl-4,6-dinitrophenol	30	105	G	27.25	0.100		gm/day
4-Nitrophenol	61	218	G	27.25	0.100		gm/day
Acenapthene	7	18	G	5.45	0.020		gm/day
Anthracene	7	18	G	5.45	0.020		gm/day
Bis(2-ethylhexyl)phthalate	36	98	G	10.90	0.040		gm/day
Diethyl phthalate	17	43	G	5.45	0.020		gm/day
Dimethyl phthalate	7	18	G	5.45	0.020		gm/day
Di-n-butyl phthalate	8	16	G	5.45	0.020		gm/day
Fluoranthene	8	20	G	5.45	0.020		gm/day
Fluorene	7	18	G	5.45	0.020		gm/day
Hexachlorobenzene	74	301	G	5.45	0.020		gm/day
Hexachlorobutadiene	54	144	G	5.45	0.020		gm/day
Hexachloroethane	74	301	G	5.45	0.020		gm/day
Naphthalene	7	18	G	5.45	0.020		gm/day
Phenanthrene	7	18	G	5.45	0.020		gm/day
Pyrene	8	18	G	5.45	0.020		gm/day
1,1,1-Trichloroethane	8	22	G	1.36	0.005		gm/day
1,1,2-Trichloroethane	12	48	G	1.36	0.005		gm/day
1,1-Dichloroethane	8	22	G	1.36	0.005		gm/day
1,1-Dichloroethene	8	23	G	1.36	0.005		gm/day
1,2-Dichloroethane	74	301	G	1.36	0.005		gm/day
1,2-Dichloropropane	74	301	G	1.36	0.005		gm/day
Benzene	22	51	G	0.54	0.002		gm/day
Carbon Tetrachloride	54	144	G	1.36	0.005		gm/day
Chlorobenzene	54	144	G	1.36	0.005		gm/day
Chloroethane	42	112	G	2.72	0.010		gm/day
Chloroform	42	123	G	1.36	0.005		gm/day
Chloromethane	42	112	G	2.72	0.010		gm/day
cis-1,3-Dichloropropene	74	301	G	1.36	0.005		gm/day
Ethylbenzene	54	144	G	1.36	0.005		gm/day
Methylene Chloride	14	64	G	1.36	0.005		gm/day
Nitrobenzene	847	2423	G	5.45	0.020		gm/day
Tetrachloroethene	20	62	G	1.36	0.005		gm/day
Toluene	11	28	G	1.36	0.005		gm/day
trans-1,2-Dichloroethene	9	25	G	1.36	0.005		gm/day
trans-1,3-Dichloropropene	74	301	G	1.36	0.005		gm/day
Trichloroethene	10	26	G	1.36	0.005		gm/day
Vinyl Chloride	37	65	G	0.54	0.002		gm/day
Shaded values represent detection limits							
Lab Dilution Factor				1,10			

RECEIVED
JAN 27 2011
DIVISION OF
ENVIRONMENTAL COMPLIANCE

METROPOLITAN ST. LOUIS SEWER DISTRICT
2010 INDUSTRIAL USER SELF MONITORING REPORT

PART I: IDENTIFYING INFORMATION

Company Name: **Mallinckrodt Inc.**

Permit No.: 2112059600 - 3 Effective Date: 06-01-2010 Expiration Date: 05-31-2015

Premise Address: 3600 North Second St., St. Louis, MO 63147

Monitoring Period: _____(JAN-MAR) ____(APR-JUNE) ____(JULY-SEPT) __X__(OCT-DEC)

Samples Collected By: Mallinckrodt Inc

Analysis Performed By: TEKLAB

Part II: ANALYTICAL RESULTS OF SELF MONITORING

MSD SAMPLE POINT REFERENCE NUMBERS	----->		912		912		912	
DATES ON WHICH SAMPLES WERE COLLECTED	----->		10/4/2010		11/1/2010		12/6/2010	
TIMES AT WHICH SAMPLES WERE COLLECTED	----->		0600		0600		0600	
PARAMETER	LIMIT	RECORD SAMPLE TYPES (G,C,M OR E) & RESULTS BELOW G=grab,C=composite,M=measured flow,E=estimated fld						UNITS
FLOW		M	89525	M	93170	M	74681	gal/day
DMAC (daily max)	7091	C	938	C	949	C	761	lb/day
DMAC (monthly average)	5459	C	938	C	949	C	761	lb/day
Lab Dilution Factor			1		1		1	

RECEIVED
JAN 27 2011
DIVISION OF
ENVIRONMENTAL COMPLIANCE

METROPOLITAN ST. LOUIS SEWER DISTRICT
2010 INDUSTRIAL USER SELF MONITORING REPORT

PART I: IDENTIFYING INFORMATION

Company Name: **MALLINCKRODT INC.**
Permit No.: 2112059600 - 3 Effective Date: 06-01-2010 **Expiration Date: 05-31-2015**
Premise Address: 3600 North Second St., St. Louis, MO 63147
Monitoring Period: ____(JAN-MAR) ___(APR-JUN) ____(JULY-SEP) _X__(OCT-DEC)
Samples Collected By: Mallinckrodt Inc
Analysis Performed By: TEKLAB

Part II: ANALYTICAL RESULTS OF SELF MONITORING

MSD SAMPLE POINT REFERENCE NUMBERS			---->		**915**			
DATES ON WHICH SAMPLES WERE COLLECTED			---->		10/21/2010			
TIMES AT WHICH SAMPLES WERE COLLECTED			---->		13:20			
PARAMETER	EPA METHOD	DAILY MAX	AVG MONTHLY	**RECORD SAMPLE TYPES (G, C, M OR E) & RESULTS BELOW** G=Grab, C-composite, M=measured flow, E=estimated flow				UNITS
FLOW				E	20,000			gal/day
Acetone	524.2	20.70	8.20	G	0.980			mg/L
n-Amyl acetate	1666	20.70	8.20	G	<0.100			mg/L
Benzene	524.2	3.00	0.70	G	<0.100			mg/L
n-Butyl acetate	1666	20.70	8.20	G	<0.100			mg/L
Chlorobenzene	524.2	3.00	0.70	G	<0.100			mg/L
Chloroform	524.2	0.10	0.03	G	<0.020			mg/L
1,2-Dichlorobenzene	524.2	20.70	8.20	G	<0.100			mg/L
1,2-Dichloroethane	524.2	20.70	8.20	G	<0.100			mg/L
Diethyl amine	1671	255.00	100.00	G	*			mg/L
Ethyl Acetate	1666	20.70	8.20	G	<0.200			mg/L
n-Heptane	1666	3.00	0.70	G	<0.200			mg/L
n-Hexane	1666	3.00	0.70	G	<0.200			mg/L
Isobutyraldehyde	1666	20.70	8.20	G	0.066			mg/L
Isopropyl acetate	1666	20.70	8.20	G	<0.100			mg/L
Isopropyl ether	1666	20.70	8.20	G	<0.100			mg/L
Methylene chloride	524.2	3.00	0.70	G	<0.100			mg/L
Methyl formate	1666	20.70	8.20	G	<1			mg/L
4-Methyl-2-pentanone	1666	20.70	8.20	G	<0.200			mg/L
Tetrahydrofuran	1666	9.20	3.40	G	<0.400			mg/L
Toluene	524.2	0.30	0.20	G	<0.100			mg/L
Triethyl amine	1671	255.00	100.00	G	*			mg/L
Xylenes	1666	3.00	0.70	G	<0.100			mg/L
** Annual monitoring requirement.*								
Dilution by lab					20			

RECEIVED
JAN 27 2011
DIVISION OF
ENVIRONMENTAL COMPLIANCE

METROPOLITAN ST. LOUIS SEWER DISTRICT
2010 INDUSTRIAL USER SELF MONITORING REPORT

PART I: IDENTIFYING INFORMATION

Company Name: **MALLINCKRODT INC.**
Permit No.: 2112059600 - 3 Effective Date: 06-01-2010 Expiration Date: 05-31-15
Premise Address: 3600 North Second St., St. Louis, MO 63147
Monitoring Period: ____(JAN-MAR) ____(APR-JUN) ____(JULY-SEP) __X__(OCT-DEC)
Samples Collected By: Mallinckrodt Inc
Analysis Performed By: TEKLAB

Part II: ANALYTICAL RESULTS OF SELF MONITORING

MSD SAMPLE POINT REFERENCE NUMBERS			---->		**920**					
DATES ON WHICH SAMPLES WERE COLLECTED			---->		10/11/2010					
TIMES AT WHICH SAMPLES WERE COLLECTED			---->		9:00					
PARAMETER	EPA METHOD	DAILY MAX	AVG MONTHLY	**RECORD SAMPLE TYPES (G, C, M OR E) & RESULTS BELOW** G=Grab, C-composite, M=measured flow,						UNITS
FLOW				E	13,000	E				gal/day
Tetrahydrofuran	1666	9.20	3.40	G	<0.400	G				mg/L
Toluene	524.2	0.30	0.20	G	<0.100	G				mg/L
Dilution by lab					20					

RECEIVED
JAN 27 2011
DIVISION OF
ENVIRONMENTAL COMPLIANCE

METROPOLITAN ST. LOUIS SEWER DISTRICT
2010 INDUSTRIAL USER SELF MONITORING REPORT

PART I: IDENTIFYING INFORMATION

Company Name: **MALLINCKRODT INC.**
Permit No.: 2112059600 - 3 Effective Date: 06-01-2010 Expiration Date: 05-31-2015
Premise Address: 3600 North Second St., St. Louis, MO 63147
Monitoring Period: ____(JAN-MAR) ____(APR-JUN) ____(JULY-SEP) __X_(OCT-DEC)
Samples Collected By: Mallinckrodt Inc
Analysis Performed By: TEKLAB

Part II: ANALYTICAL RESULTS OF SELF MONITORING

MSD SAMPLE POINT REFERENCE NUMBERS			---->		**927**				
DATES ON WHICH SAMPLES WERE COLLECTED			---->		10/5/2010				
TIMES AT WHICH SAMPLES WERE COLLECTED			---->		14:00				
PARAMETER	EPA METHOD	DAILY MAX	AVG MONTHLY	**RECORD SAMPLE TYPES (G, C, M OR E) & RESULTS BELOW** G=Grab, C-composite, M=measured flow,					UNITS
FLOW				E	2,200				gal/day
Acetone	524.2	20.70	8.20	G	<1				mg/L
n-Amyl acetate	1666	20.70	8.20	G	<0.100				mg/L
Ethyl Acetate	1666	20.70	8.20	G	<0.200				mg/L
Isopropyl acetate	1666	20.70	8.20	G	<0.100				mg/L
Methylene chloride	524.2	3.00	0.70	G	0.025				mg/L
Dilution by lab					20				

RECEIVED
JAN 27 2011
DIVISION OF
ENVIRONMENTAL COMPLIANCE

METROPOLITAN ST. LOUIS SEWER DISTRICT
2010 INDUSTRIAL USER SELF MONITORING REPORT

PART I: IDENTIFYING INFORMATION

Company Name: **MALLINCKRODT INC.**
Permit No.: 2112059600 - 3 Effective Date: 06-01-2010 Expiration Date: 05-31-2015
Premise Address: 3600 North Second St., St. Louis, MO 63147
Monitoring Period: ____(JAN-MAR) ____(APR-JUN) ____(JULY-SEP) __X__(OCT-DEC)
Samples Collected By: Mallinckrodt Inc
Analysis Performed By: TEKLAB

Part II: ANALYTICAL RESULTS OF SELF MONITORING

MSD SAMPLE POINT REFERENCE NUMBERS ----->					**930**				
DATES ON WHICH SAMPLES WERE COLLECTED ----->									
TIMES AT WHICH SAMPLES WERE COLLECTED ----->									
PARAMETER	EPA METHOD	DAILY MAX	AVG MONTHLY	**RECORD SAMPLE TYPES (G, C, M OR E) & RESULTS BELOW** G=Grab, C-composite, M=measured flow, E=estimated flow					UNITS
FLOW				E	*				gal/day
Acetone	524.2	20.70	8.20	G					mg/L
Ethyl Acetate	1666	20.70	8.20	G					mg/L
Isopropyl acetate	1666	20.70	8.20	G					mg/L
Methylene chloride	524.2	3.00	0.70	G					mg/L
n-Amyl acetate	1666	20.70	8.20	G					mg/L
***No flow during this reporting period.**									
Dilution by lab					20				

RECEIVED
JAN 27 2011
DIVISION OF
ENVIRONMENTAL COMPLIANCE

METROPOLITAN ST. LOUIS SEWER DISTRICT
2010 INDUSTRIAL USER SELF MONITORING REPORT

PART I: IDENTIFYING INFORMATION

Company Name: **MALLINCKRODT INC.**
Permit No.: 2112059600 - 3 Effective Date: 06-01-2010 Expiration Date: 05-31-2015
Premise Address: 3600 North Second St., St. Louis, MO 63147
Monitoring Period: _____(JAN-MAR) _____(APR-JUN) _____(JULY-SEP) __X__(OCT-DEC)
Samples Collected By: Mallinckrodt Inc
Analysis Performed By: TEKLAB

Part II: ANALYTICAL RESULTS OF SELF MONITORING

MSD SAMPLE POINT REFERENCE NUMBERS			---->		933							
DATES ON WHICH SAMPLES WERE COLLECTED			---->		12/1/2010							
TIMES AT WHICH SAMPLES WERE COLLECTED			---->		1450							
PARAMETER	EPA METHOD	DAILY MAX	AVG MONTHLY	**RECORD SAMPLE TYPES (G, C, M OR E) & RESULTS BELOW** G=Grab, C-composite, M=measured flow, E=estimated flow								UNITS
FLOW				E	3,000							gal/day
Acetone	524.2	20.70	8.20	G	<1.000							mg/L
n-Amyl acetate	1666	20.70	8.20	G	<0.100							mg/L
Ethyl Acetate	1666	20.70	8.20	G	<0.200							mg/L
Isopropyl acetate	1666	20.70	8.20	G	<0.100							mg/L
Methylene chloride	524.2	3.00	0.70	G	<0.100							mg/L
Dilution by lab					20							

RECEIVED
JAN 27 2011
DIVISION OF
ENVIRONMENTAL COMPLIANCE

METROPOLITAN ST. LOUIS SEWER DISTRICT
2010 INDUSTRIAL USER SELF MONITORING REPORT

PART I: IDENTIFYING INFORMATION

Company Name: **MALLINCKRODT INC.**

Permit No.: 2112059600 - 3 Effective Date: 06-01-2010 Expiration Date: 05-31-2015

Premise Address: 3600 North Second St., St. Louis, MO 63147

Monitoring Period: ____(JAN-MAR) ____(APR-JUN) ____(JULY-SEP) _X_(OCT-DEC)

Samples Collected By: Mallinckrodt Inc

Analysis Performed By: TEKLAB

Part II: ANALYTICAL RESULTS OF SELF MONITORING

MSD SAMPLE POINT REFERENCE NUMBERS			---->		**935**					
DATES ON WHICH SAMPLES WERE COLLECTED			---->							
TIMES AT WHICH SAMPLES WERE COLLECTED			---->							
PARAMETER	EPA METHOD	DAILY MAX	AVG MONTHLY	**RECORD SAMPLE TYPES (G, C, M OR E) & RESULTS BELOW** G=Grab, C-composite, M=measured flow, E=estimated flow						UNITS
FLOW				E	0					gal/day
Acetone	524.2	20.70	8.20	G	*					mg/L
Benzene	524.2	3.00	0.70	G	*					mg/L
Chlorobenzene	524.2	3.00	0.70	G	*					mg/L
Chloroform	524.2	0.10	0.03	G	*					mg/L
1,2-Dichlorobenzene	524.2	20.70	8.20	G	*					mg/L
1,2-Dichloroethane	524.2	20.70	8.20	G	*					mg/L
Ethyl Acetate	1666	20.70	8.20	G	*					mg/L
n-Hexane	1666	3.00	0.70	G	*					mg/L
Methylene chloride	524.2	3.00	0.70	G	*					mg/L
4-Methyl-2-pentanone	1666	20.70	8.20	G	*					mg/L
Tetrahydrofuran	1666	9.20	3.40	G	*					mg/L
Toluene	524.2	0.30	0.20	G	*					mg/L
Xylenes	1666	3.00	0.70	G	*					mg/L
Isobutyraldehyde	1666	20.70	8.20	G	*					mg/L
n-Amyl acetate	1666	20.70	8.20	G	*					mg/L
n-Butyl acetate	1666	20.70	8.20	G	*					mg/L
Isopropyl acetate	1666	20.70	8.20	G	*					mg/L
Isopropyl ether	1666	20.70	8.20	G	*					mg/L
n-Heptane	1666	3.00	0.70	G	*					mg/L
Methyl formate	1666	20.70	8.20	G	*					mg/L
Diethyl amine	1671	255.00	100.00	G	*					mg/L
Triethyl amine	1671	255.00	100.00	G	*					mg/L
**** No PEG flow this quarter***										
Dilution by lab										

RECEIVED
JAN 27 2011
DIVISION OF
ENVIRONMENTAL COMPLIANCE

METROPOLITAN ST. LOUIS SEWER DISTRICT
2010 INDUSTRIAL USER SELF MONITORING REPORT

PART I: IDENTIFYING INFORMATION

Company Name: **MALLINCKRODT INC.**
Permit No.: 2112059600 - 3 Effective Date: 06-01-2010 Expiration Date: 05-31-2015
Premise Address: 3600 North Second St., St. Louis, MO 63147
Monitoring Period: ____(JAN-MAR) _____(APR-JUN) ____(JULY-SEP) __X__(OCT-DEC)
Samples Collected By: Mallinckrodt Inc
Analysis Performed By: TEKLAB

Part II: ANALYTICAL RESULTS OF SELF MONITORING

MSD SAMPLE POINT REFERENCE NUMBERS			---->		**936**					
DATES ON WHICH SAMPLES WERE COLLECTED			---->		10/4/2010					
TIMES AT WHICH SAMPLES WERE COLLECTED			---->		13:15					
PARAMETER	EPA METHOD	DAILY MAX	AVG MONTHLY	**RECORD SAMPLE TYPES (G, C, M OR E) &** G=Grab, C-composite, M=measured flow, E=estimated flow						UNITS
FLOW				E	14,400					gal/day
Acetone	524.2	20.70	8.20	G	<1					mg/L
n-Amyl acetate	1666	20.70	8.20	G	<0.100					mg/L
Benzene	524.2	3.00	0.70	G	<0.100					mg/L
n-Butyl acetate	1666	20.70	8.20	G	<0.100					mg/L
Chlorobenzene	524.2	3.00	0.70	G	<0.100					mg/L
Chloroform*	524.2	0.10	0.03	G	<0.020					mg/L
1,2-Dichlorobenzene	524.2	20.70	8.20	G	<0.100					mg/L
1,2-Dichloroethane	524.2	20.70	8.20	G	<0.100					mg/L
Diethyl amine	1671	255.00	100.00	G	<50					mg/L
Ethyl Acetate	1666	20.70	8.20	G	<0.200					mg/L
n-Heptane	1666	3.00	0.70	G	<0.200					mg/L
n-Hexane	1666	3.00	0.70	G	<0.200					mg/L
Isobutyraldehyde	1666	20.70	8.20	G	<0.200					mg/L
Isopropyl acetate	1666	20.70	8.20	G	<0.100					mg/L
Isopropyl ether	1666	20.70	8.20	G	<0.100					mg/L
Methylene chloride	524.2	3.00	0.70	G	<0.100					mg/L
Methyl formate	1666	20.70	8.20	G	<1					mg/L
4-Methyl-2-pentanone	1666	20.70	8.20	G	<0.200					mg/L
Tetrahydrofuran	1666	9.20	3.40	G	<0.400					mg/L
Toluene	524.2	0.30	0.20	G	<0.100					mg/L
Triethyl amine	1671	255.00	100.00	G	<20					mg/L
Xylenes	1666	3.00	0.70	G	<0.100					mg/L
* Chloroform Results	Raw Water	SP936								
10/4/2010	<0.020 mg/l	<0.020 mg/l								
Results above reported as the difference between SP936 and Raw Water.										
Dilution by lab					1, 20					

RECEIVED
JAN 27 2011
DIVISION OF
ENVIRONMENTAL COMPLIANCE

METROPOLITAN ST. LOUIS SEWER DISTRICT
2010 INDUSTRIAL USER SELF MONITORING REPORT

PART I: IDENTIFYING INFORMATION

Company Name: **MALLINCKRODT INC.**
Permit No.: 2112059600 - 3 Effective Date: 06-01-2010 Expiration Date: 05-31-2015
Premise Address: 3600 North Second St., St. Louis, MO 63147
Monitoring Period: ____(JAN-MAR) ____(APR-JUN) ____(JULY-SEP) __X__(OCT-DEC)
Samples Collected By: Mallinckrodt Inc
Analysis Performed By: TEKLAB

Part II: ANALYTICAL RESULTS OF SELF MONITORING

MSD SAMPLE POINT REFERENCE NUMBERS			---->		**937**				
DATES ON WHICH SAMPLES WERE COLLECTED			---->		10/11/2010				
TIMES AT WHICH SAMPLES WERE COLLECTED			---->		9:00				
PARAMETER	EPA METHOD	DAILY MAX	AVG MONTHLY	**RECORD SAMPLE TYPES (G, C, M OR E) & RESULTS BELOW** G=Grab, C-composite, M=measured flow, E=estimated flow					UNITS
FLOW				E	22,000				gal/day
Tetrahydrofuran	524.2	**9.20**	3.40	G	<0.400				mg/L
Toluene	524.2	**0.30**	0.20	G	<0.100				mg/L
Dilution by lab					20				

RECEIVED
JAN 27 2011
DIVISION OF ENVIRONMENTAL COMPLIANCE

METROPOLITAN ST. LOUIS SEWER DISTRICT
2010 INDUSTRIAL USER SELF MONITORING REPORT

PART I: IDENTIFYING INFORMATION

Company Name: **MALLINCKRODT INC.**
Permit No.: 2112059600 - 3 Effective Date: 06-01-2010 Expiration Date: 05-31-2015
Premise Address: 3600 North Second St., St. Louis, MO 63147
Monitoring Period: _____(JAN-MAR) _____(APR-JUN) _____(JULY-SEP) __X__(OCT-DEC)
Samples Collected By: Mallinckrodt Inc
Analysis Performed By: TEKLAB

Part II: ANALYTICAL RESULTS OF SELF MONITORING

MSD SAMPLE POINT REFERENCE NUMBERS			---->		**938**							
DATES ON WHICH SAMPLES WERE COLLECTED			---->		10/7/2010							
TIMES AT WHICH SAMPLES WERE COLLECTED			---->		11:00							
PARAMETER	EPA METHOD	DAILY MAX	AVG MONTHLY	**RECORD SAMPLE TYPES (G, C, M OR E) & RESULTS BELOW** G=Grab, C-composite, M=measured flow, E=estimated flow								UNITS
FLOW				E	3,000							gal/day
Acetone	524.2	20.70	8.20	G	<1							mg/L
n-Amyl acetate	1666	20.70	8.20	G	<0.100							mg/L
Ethyl Acetate	1666	20.70	8.20	G	<0.200							mg/L
Isopropyl acetate	1666	20.70	8.20	G	<0.100							mg/L
Methylene chloride	524.2	3.00	0.70	G	0.023							mg/L
Dilution by lab					20							

RECEIVED
JAN 27 2011
DIVISION OF
ENVIRONMENTAL COMPLIANCE

Mallinckrodt Inc.
21120596-00 SP849

Steve Grace

From: Steve Grace
Sent: Wednesday, February 09, 2011 11:11 AM
To: 'Meyer, Lisa A'
Cc: Summers, Julie
Subject: RE: Special Discharge Permit - Extension Request

Hello Lisa,

Based on the information provided below, your request for extension is granted. The approval for the onsite discharge of the accumulated rainwater formerly in contact with potentially radioactive soils will expire on February 19, 2011. All other terms and conditions of the original approval apply.

Contact me with any questions.

Thanks,
Steve

From: Meyer, Lisa A [mailto:Lisa.Meyer@Covidien.com]
Sent: Wednesday, February 09, 2011 10:23 AM
To: Steve Grace
Cc: Summers, Julie
Subject: Special Discharge Permit - Extension Request
Importance: High

Steve,
I would like to request an extension to our Special Discharge permit for the discharge of 40,000 gallons of wastewater which is the accumulated rainwater formerly in contact with potentially radioactive soils. Our authorization letter was dated January 19, 2011. We would like a 30 day extension to February 19, 2011.

The extreme cold weather conditions had prohibited the discharge from occurring. We plan to begin the discharge today, February 9, 2011.

Thank you.

Lisa

Lisa Meyer
Senior HSE Engineer
Covidien
Mallinckrodt
3600 North Second Street
St. Louis, MO 63147
USA
314.654.3374 office
314.654.1251 fax

Together we can make a difference. Consider the environment before choosing to print this message.

Metropolitan St. Louis Sewer District

Division of Environmental Compliance
10 East Grand Avenue
St. Louis, MO 63147-2913
Phone: 314.768.6200 www.stlmsd.com

January 21, 2011

Lisa Meyer
MALLINCKRODT
3600 North Second St.
St. Louis, MO 63147

Dear Ms. Meyer:

We have reviewed your application dated October 8, 2010 requesting approval to discharge up to 40,000 gallons of wastewater per day to the Metropolitan St. Louis Sewer District for treatment. This wastewater is treated rainwater and groundwater from the remediation of the Columbium-Tantalum (CT) decommissioning project at the Mallinckrodt facility located at 3600 North Second Street, St. Louis, Missouri. Information provided in conjunction with the application indicated the CT decommissioning project will involve excavation and remediation of potential radioactive soils. A wastewater treatment package system that includes the use of granular activated carbon and small diameter micron filters will reduce the organic compounds, and radioactive and toxic metals in the rainwater and groundwater that has accumulated in the remediation excavations. The treated wastewater will be stored in two-20,000 gallon Baker tanks prior to discharge.

Based on the information provided in conjunction with the application, the proposed treatment system appears adequate to produce a wastewater effluent which meets MSD Ordinance 12559 standards. The proposed system is approved for treatment of the wastewater when installed, maintained and operated to produce an effluent meeting the standards of Ordinance 12559. In a telephone conversation with you on January 21, 2011, it was decided that the treated wastewater will be discharged into a combined sewer identified on MSD's base map as Inlet 18D1-395C. This approval is valid for one year from the date of this letter.

You must be certain the waste is discharged into the above combined sewer inlet only. To discharge at an alternate location, you will need to obtain prior written approval from us. The discharge into the sewer must be controlled at a rate that will not surcharge the lines in that area. This letter does not authorize any discharge to a separate storm sewer, or to any watercourse, as any such discharge would be in violation of state and federal laws. **Please notify me at the number below when the discharge is to commence, and please ensure the onsite personnel discharging the wastewater in question are provided with a copy of this letter.**

Prior to discharging each batch of treated wastewater, the analytical results of a representative sample must be reviewed and approved, in writing, by MSD. The required analytical results include: pH; total suspended solids (TSS); chemical oxygen demand (COD); cadmium, chromium, copper, iron, lead, nickel, and zinc; volatile organic priority pollutants (using EPA Method 624); gross alpha radioactivity; gross beta radioactivity; Uranium 235 and 238, Radium 226 and 228; and Thorium 230 and 232.

MSD reserves the right to require additional parameters or sampling frequencies as necessary based upon our review of analytical results submitted. Gross beta radioactivity over 50 pCi/L will require the radioisotopes to be identified and a determination made as to whether they are subject to 10 CFR Part 20 or are exempt as "background radiation". The discharge of this wastewater must result in the facility's compliance with the limits for releases to sewers in 10 CFR Part 20, Appendix B, Table 3.

For billing purposes, you must confirm the volume of this wastewater discharged to us, in writing. Reports are due no later than 28 days after each discharge event. Please refer to this letter and include the date of the discharge when providing that figure. You will be billed by invoice at the billing rate in effect at the time of discharge. The current rate, contained in MSD Ordinance 13021, is $2.02 per hundred cubic feet ($2.70 per thousand gallons). Please do not pay this amount until you receive our invoice.

This discharge has been approved based upon the information and sample analysis you provided, and is subject to the conditions stated above. This approval may be revoked by the District at any time if any of the information is found to be incorrect, or if the conditions of this approval are violated. Also, if the discharge causes any operational or maintenance problem within the District's collection or treatment system, or results in violations of any conditions of the District's NPDES permit, Mallinckrodt will be considered responsible for damages.

If you have any questions, please call me at (314) 436-8755.

Sincerely,
METROPOLITAN ST. LOUIS SEWER DISTRICT

Steven M. Grace

Steve Grace
Environmental Assistant Engineer

bv

pc: Brian Gibson
Doug Mendoza

File: IU, MALLINCKRODT INC [2112059600]

C1A

SD EVALUATION CHECKLIST - ON SITE

APPLICATION INFORMATION

Source Name: Mallinckrodt Inc.

Evaluated by: SMG

Premise Address: 3600 N. 2nd St.

Date: 1/21/11

Send approval letter to applicant

Application Dated: 10/8/10 Received: 10/14/11 All Requested Info. Received: 1/21/11

SOURCE FILING/DESCRIPTION

1 - Source in PIMS? (Y) / N
2 - If No, on IU Cross-Ref list? * Y / N
3 - If No, MSD Account # from E-CIS? Y / N
4 - If none, on "Source" list (pre-IMS)? ** Y / N
5 - If No, assigned SOUR# from PIMS.

* o:\costrecovery\cross reference xls file
** o:\costrecovery\sourlist xls file

SOURCE TYPE (circle): (IU) / Dead IU / SD

INDUSTRY ID: 21120596-00

Sample Point: No. Assigned: 850 Description: treated rainwater & groundwater from the remediation of CT decommissioning project.

Normal WW flow from premise? N/A _____ ccf/month, 2,992,101 GPD, _____ GPH. from SP010

REGULATORY STATUS

Is waste a Hazardous Waste? (N) / Y

Categorical standards apply? (N) / Y

Contain PCB/ asbestos/ radioactive/ dioxin/ used oil? N / (Y) pretreated WW in contact w/potentially radioactive soils

Regulatory Agency Oversight? N / (Y) NRC

DISCHARGE CONSIDERATIONS At MSD's connection:

Ordinance Limits (12559, p32) exceeded? (N) / Y

Ordinance other limits exceeded (dye, flash pt <140F, temp >140F, obstruction, nuisance foaming/odor, corrosion causing): (N) / Y

Water Quality Standard exceeded? (N) / Y

Fumes in sewer exceed PEL/TLV limits? (N) / Y

Vapors in sewer exceed 10% of LEL? (N) / Y

RECOMMENDATION: (APPROVE) / DENY (cc WWTP Mgr for timed discharge)

APPROVAL CONDITIONS:

Timed Discharge (COD/BOD/WQ/foam): (N) / Y Limit = _____ gal/hour

Require Treatment before Discharge? N / (Y) see above

Laboratory analysis fee due? (N) / Y $_____

SMR required? N / (Y) Frequency/analysis: per batch - Group I plus radioactive isotopes

SMR log: N/A / (Remediation.xls) / Nonremediation.xls

Volume Billing applies (water unmetered or credited)? N / (Y)

Bill High Strength? (N) / Y Yes, If use >60,000 gal/month water ___and, > norm WW strgth

Surcharge calculation attached: (N/A) / N / Y

Expiration log updated: N/A / N / (Y)

O:\CostRecovery\Special Discharge\C1a.Checklist.doc

COVIDIEN

October 8, 2010

Mr. Steve Grace
St. Louis Metropolitan Sewer District
10 East Grand Ave
St. Louis, MO 63147

RE: Request for Special Discharge for Wastewater Generated from the Columbium-Tantalum Decommissioning Project
MSD Permit 21120596 - 3

Dear Mr. Grace,

Attached please find an Application for Special Discharge Approval for wastewater generated from the Columbium-Tantalum (CT) decommissioning project at the Covidien St. Louis Plant. The wastewater generated from the decommissioning project will be a result of groundwater and storm water collection in the remediation site's excavation. An outside contractor has been hired to perform the decommissioning and remediation work. A wastewater treatment package plant will be set up on site to remove potential radioactive solids. The wastewater will then be stored in one of two temporary 20,000 gallon storage tanks where it will be tested in accordance with MSD requirements and will be discharge to MSD sewers.

Mallinckrodt has held a Nuclear Regulatory Commission (NRC) license since 1961 for the extraction of columbium and tantalum from natural and synthetic ores and slags. The Atomic Energy Commission originally issued the license. The license was required because process raw materials and by-products contained sufficient quantities of natural uranium and thorium isotopes. It is currently a possession-only license.

The CT decommissioning plan activities are designed to decontaminate and decommission the areas of Mallinckrodt's St. Louis Plant involved with the historic processing, storage, and handling of radioactive materials associated with the extraction of columbium and tantalum from ores and slags.

The ultimate goal of the CT decommissioning plan is to remediate the radiological constituents associated with CT production to the extent required to terminate the NRC license.

COVIDIEN/MALLINCKRODT
3600 NORTH SECOND STREET
ST. LOUIS, MO 63147

TELEPHONE: 314-654-2000
FAX: 314-654-1251

COVIDIEN

The project will be broken up into four phases, see attached drawing with excavation occurring in these areas to remove contaminated soils. As a result of the excavations, ground water and storm water collected will need to be removed.

The water will be pumped through a treatment system (see attached specifications), into a portable storage tank and sampled. Two tanks will be staged so that one tank can be analyzed while the other is being filled.

The discharge is scheduled to begin on or around November 1, 2010. The project is scheduled to be completed by October 1, 2011. It is estimated that 20,000 gallons will be discharged per week on average. During periods of heavy rains however, this number may be higher.

As is indicated in the attached Special Discharge Application, analytical information will be provided to you prior to any discharge to MSD. We plan to stage the treatment unit near the northwest corner of Building 260 and discharge the treated water in MSD sewers located on the north side of Angelrodt Street.

If you have any questions or need additional information, please contact me at 314.654.3374.

Sincerely,

Lisa Meyer

Lisa Meyer
Senior HSE Engineer

Enclosures

COVIDIEN/MALLINCKRODT
3600 NORTH SECOND STREET
ST. LOUIS, MO 63147

TELEPHONE: 314-654-2000
FAX: 314-654-1251

Metropolitan St. Louis Sewer District

Phone No. (314) 436-8710

Division of Environmental Compliance, 10 East Grand Avenue, St. Louis, Missouri 63147 Fax No. (314) 436-8766

APPLICATION FOR SPECIAL DISCHARGE APPROVAL

I. WASTEWATER SOURCE IDENTIFICATION:

Site Name: Mallinckrodt

Premise Address: 3600 North 2nd St.

City: St. Louis State: MO Zip: 63147

Owner: Mallinckrodt

Contact Person: Lisa Meyer

Title: Senior HSE Engineer

Phone: 314.654.3374 Fax: 314.654.1251

II. APPLICANT (mailing information):

Applicant Name: Lisa Meyer

Title: Senior HSE Engineer

Company Name: Mallinckrodt

Mailing Address: 3600 North 2nd St.

City: St. Louis State: MO Zip: 63147

Phone: 314.654.3374 Fax: 314.654.1251

III. A. MATERIAL TO BE DISCHARGED (check all applicable boxes):

1. Wastewater description/location: Groundwater / Stormwater from Columbium-Tantalum Decommissioning Project
2. Process/activity generating wastewater: See attached letter dated October 8, 2010
3. Physical and chemical composition: List all constituents, and known or potentially present regulated contaminants below.

☑ See separate listing enclosed, and/or ☐ See analytical results enclosed, and/or ☐ Material Safety Data Sheet enclosed.

DESCRIPTION	RANGE	UNIT

DESCRIPTION *(continued)*	RANGE	UNIT

4. Is this wastewater from a process subject to EPA's categorical standards in 40 CFR Subchapter N? ☐ Yes ☑ No
   a. If yes, the applicable standards are in: 40 CFR Part _____, Subpart _____ ☐ Existing source ☐ New source
5. Does this wastewater contain polychlorinated biphenyls, asbestos or radioactive material? ☐ Yes ☑ No
   a. If yes, describe: _____
6. Representative sample: ☐ Laboratory results attached, and/or ☐ Sample provided (1/2 gallon minimum, clear container)
   a. Sample collection point/location: _____ Collection method: _____
   b. Sampler's name/Co.: _____ Sample date/time: _____
   c. Attach chain of custody as available
7. Discharge will occur over the following time period: ☐ < 30 days ☐ ≥ Two years ☑ Other: ~ One year
   a. Expected total volume of wastewater to be discharged over the time period above: _____ Gallons
   b. Proposed discharge volume: 20,000 Gallons, at a frequency of: ☐ One time ☐ Daily ☐ Weekly ☐ Monthly ☐ Once/three months ☐ Once/six months ☑ Other: batch discharge of 20,000 gallons as needed
8. Pretreatment of wastewater prior to discharge: ☐ None ☑ Yes, describe: See attached letter.
   a. If yes, attach site plan, pretreatment system schematic, and design specifications.
9. Wastewater from a remediation project under: ☐ Superfund/CERCLA ☐ RCRA ☐ Voluntary program ☐ UST ☐ Not applicable ☑ NRC
   a. If from a remediation project, briefly describe the past and present utilization of the property: See attached letter

III.B. MATERIAL FROM UNDERGROUND STORAGE TANK SOURCE

☑ **Not applicable (go to Section IV)**

Please answer the following questions if you are requesting to discharge wastewater associated with an underground storage tank system.

1. a. Wastewater from: ☐ Inside UST(s) ☐ UST system pit ☐ Excavation outside UST system pit ☐ Monitoring well ☐ Groundwater remediation system

   b. UST project involves wastewater from: ☐ UST(s) closed in place ☐ UST(s) removed ☐ Remediation ☐ Upgrade ☐ Maintenance activities ☐ Well monitoring ☐ Other, explain: _____

   c. If wastewater is from a closure project, how long has UST(s) been out of service: _____ years

2. a. State assigned UST site identification number: _____ ☐ Not applicable

   b. Number of USTs affected: _____ ☐ Unknown

   c. For the UST(s) involved, their state identification number(s): _____ ☐ Not applicable

   d. Service Station Identification Number, as applicable: _____

3. Tank contents/former contents: ☐ Gasoline ☐ #2 diesel ☐ Used oil ☐ Unknown ☐ Other: _____

IV. DISCHARGE LOCATION

1. ☑ On-site. Describe proposed point of entry to sewer and the discharge rate (must be a sanitary or combined sewer): _____

MSD sewers on Angelrodt Street _____ Note: Range of discharge must not surcharge sewer line.

2. ☐ Haul to MSD Bissell Point Hauled Waste Receiving Station at 10 E. Grand, St. Louis, MO.

   a. Transporters Name: _____ and MSD Hauler ID Number: _____

   b. Hazardous Waste Certification:

   For wastewater which is hauled to MSD's Bissell Point Hauled Waste Receiving Station, I hereby certify that to the best of my knowledge and belief, the above hauled waste is not classified as a RCRA "hazardous waste" as defined by the MDNR in 10 CSR 25 or USEPA in 40 CFR Part 261.

   Applicant Name (print): _____

   Signature: _____ **Date:** _____

ADDITIONAL INFORMATION:

_____

_____

_____

_____

_____

_____

V. APPLICANT SIGNATURE AND CERTIFICATION

This application must be signed by the applicant: either the source contact, or a contractor or agent directly responsible for site activities.

I hereby certify that I am directly responsible for activities at the site regarding the wastewater to be discharged, and to the best of my knowledge and belief, based on appropriate inquiry, the information in this application is true, complete, and accurate. The samples or analyses submitted are representative of the materials to be discharged. If granted approval to discharge, I agree to abide by the MSD Ordinances, and all applicable federal, state and local regulations. I agree to pay the costs of any pre-approval analyses performed by MSD and to pay any applicable disposal charges for the volume and strength of the wastes discharged.

Applicant Name (print): Lisa Meyer

Signature: Lisa Meyer **Date:** 10/08/10

FOR MSD USE ONLY:

File Name: _____ ID No: _____ Sample Point No: _____

Project Name _____

Sales Person _____

Customer _____

Project Information:

System Layout Diagram

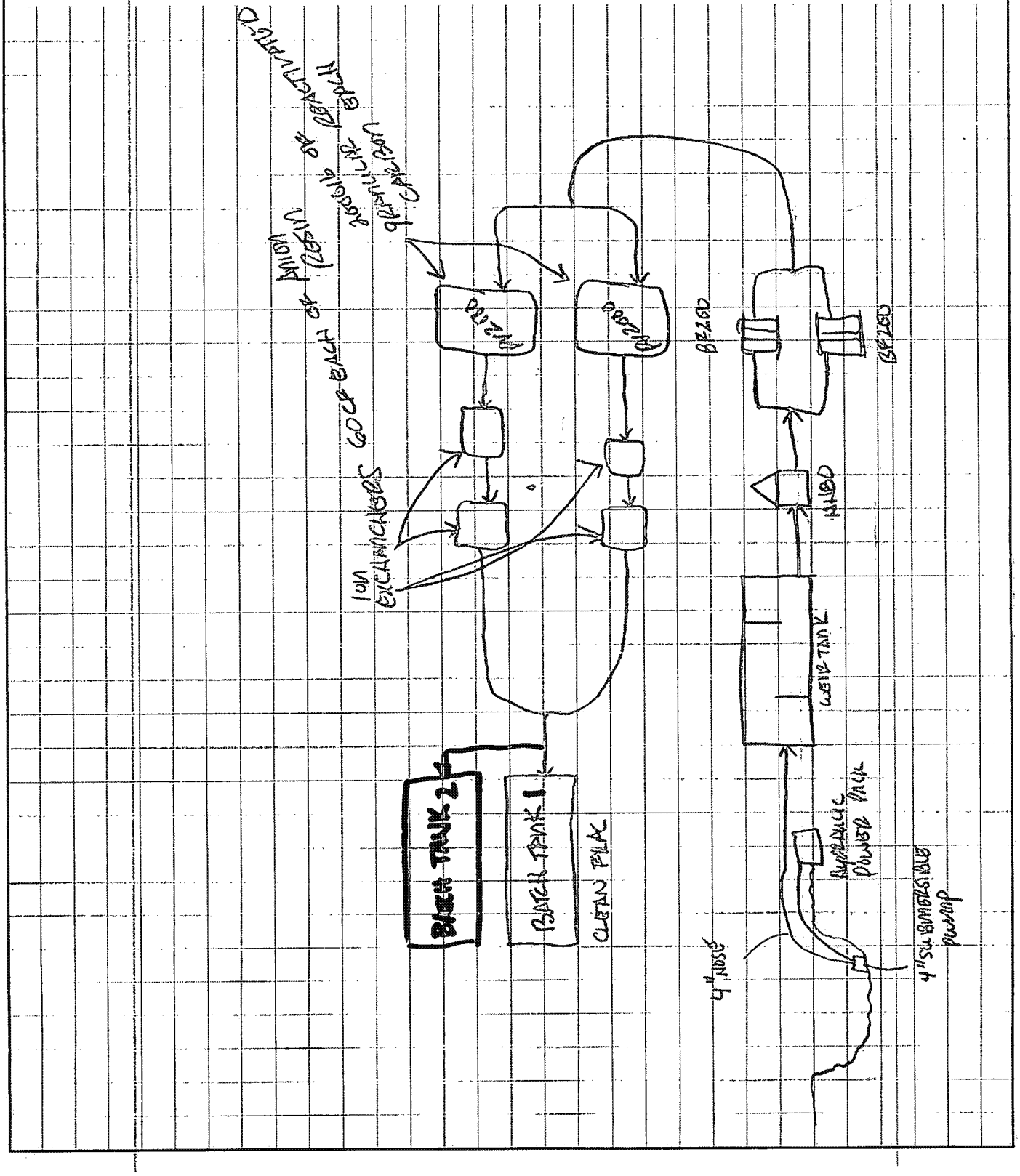

BF 200
Up to 200 GPM

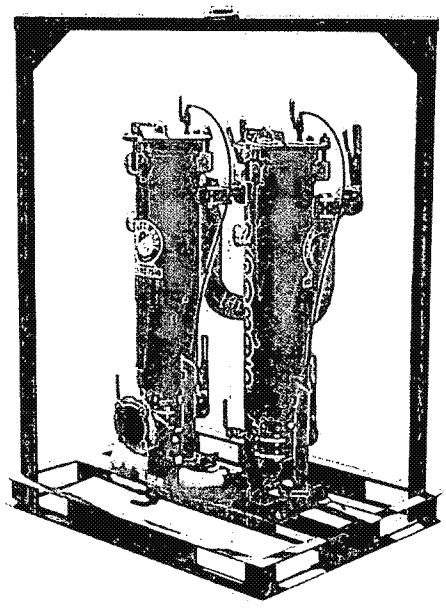

Features

- Manifold connections are 3" 150 lb flanges
- Double bag filter
- Bag filter for high solids holding capacity
- Replaceable bag filters from 100 to 1 micron nominal rating
- No moving parts
- Skid mounted

Technical

- Bag filter chambers connect in parallel
- Units are fitted with bleed valves and pressure gauges
- System can stand alone for sediment removal or be used in combination with filter equipment
- Footprint: 48" long x 36" wide x 66" high
- Dry weight: 800 lbs.

Material Specifications

- Chambers constructed of 304 Stainless Steel
- Piping constructed of 304 stainless steel
- Each bag filter chamber holds one (1) 7" x 30" double- stitched filter bag
- Maximum operating pressure: 125psi
- Stainless Steel inlet and outlet manifolds

Available Accessories

- Power Prime Pumps
- Spill Guard Containment berms
- Stainless Steel 304 and Carbon Steel storage tanks in
- Bi-Level, Mixer, Weir and Manifold configurations
- Polyethylene storage tanks
- Cartridge and bag filters
- HDPE pipe and fittings
- Roll off boxes, dewatering bins and vacuum boxes
- Flow meters and pressure reducing/ sustaining valves
- Aluminum Victaulic pipe and fittings
- Suction and discharge hose

Rain for Rent
P.O. Box 2248
Bakersfield CA 93303
800-742-7246
661-393-1542
FAX 661-393-1542
www.rainforrent.com
info@rainforrent.com

Rain for Rent is a registered trademark of Western Oilfields Supply Company. Features and Specifications are subject to change without notice.

PV® Series Liquid Phase Adsorbers

PV-500, PV-1000, PV-2000

Applications

The PV® Series adsorbers are designed for use in a wide range of low/high flow and pressure applications.

- Groundwater remediation
- Wastewater filtration
- Tank rinse water treatment
- Pilot testing
- Underground storage tank clean up
- Leachate treatment
- Dechlorination
- Spill cleanup
- Hydrotesting

Installation, Startup and Operation

Siemens can provide a total service package that includes utilizing OSHA trained personnel providing on-site carbon changeouts, packaging and transportation of spent carbon for recycling at our reactivation facilities.

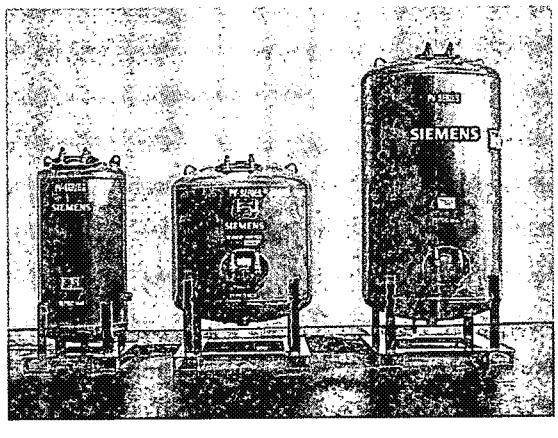

At the time of purchase or rental of the adsorbers, arrangements should be made for the reactivation of the spent carbon. Siemens will provide instructions and assistance on how to obtain acceptance of the spent carbon at our reactivation facilities. Spent carbon cannot be accepted for reactivation until the acceptance process is completed.

Benefits & Design Features

- Durable, carbon steel construction includes internally/externally welded seams.
- SSPC-SP5 sandblasted, baked epoxy interior coating; urethane exterior finish.
- Approved for the transport of hazardous spent carbon.
- Top and side manways permit easy access and inspection of vessels internals and linings.
- Skid-mounted for easy handling and installation.
- Optimized underdrain system for low pressure drop operation.

Piping Manifold (Optional)

- 2"/3" sch 80 PVC piping and valves that allow either adsorber to be used in the lead or lag position (optional carbon steel and stainless steel piping).
- Series or parallel operation.
- Clean utility water connection for manual backflush.
- Sampling ports and pressure gauges.
- Flexible hoses with Kamlock fittings allow easy installation and removal during service exchange operations.
- Available for purchase or rental.

Specification/Typical Properties			
	PV®-500	PV®-1000	PV®-2000
Dimensions (Dia. x Overall Height – Approx.)	30" x 5'7"	48" x 5'7"	48" x 8'8"
Inlet Connection, (Top)	2"	3" NPT (Female)	3" NPT (Female)
Outlet Connection, (Bottom)	2"	3" NPT (Male)	3" NPT (Male)
Manway, Top & Lower Side	11" X 15" (top only)	11" X 15"	11" X 15"
Internal Piping	PVC	PVC	PVC
Interior Coating (All Units)	Epoxy	Epoxy	Epoxy
Exterior Coating (All Units)	Epoxy/Urethane	Epoxy/Urethane	Epoxy/Urethane
Carbon Fill Volume (Cu.ft.)	18.5	34	68
Vessel Weight (lbs.):			
Shipping (With Carbon)	1050	1910	3200
Operating (Approx.)	1750	4300	7500
Flow, GPM (Nominal)	25	50	100
Pressure, PSIG (Maximum)1	75	75	75
Temperature °F. (Maximum)	140	140	140
Pounds Of Activated Carbon	500	1000	2000
Contact Time @ Max Flow/Min	5	5	5
Backflush rate (GPM) @ 55°F	15-20	40-50	40-50

1The PV® Series adsorbers are not ASME code stamped. Pressure rating applies to liquid only.
For detailed dimensional information or drawings, contact your local Siemens sales representative.
For information on the HP® Series ASME code stamped adsorbers, contact your local Siemens representative.

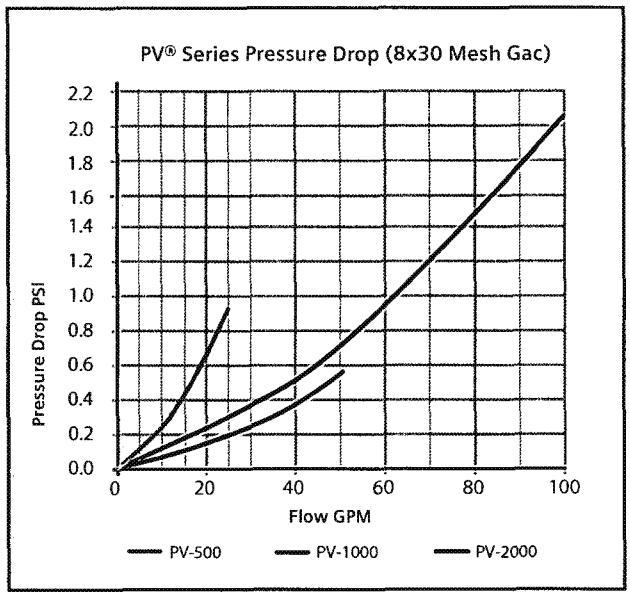

Safety Note: Wet activated carbon readily adsorbs atmospheric oxygen. Dangerously low oxygen levels may exist in closed vessels or poorly ventilated storage areas. Workers should follow all applicable state and federal safety guidelines for entering oxygen depleted areas.

All information presented herein is believed reliable and in accordance with accepted engineering practices. Siemens makes no warranties as to completeness of information. Users are responsible for evaluating individual product suitability for specific applications. Siemens assumes no liability whatsoever for any special, indirect or consequential damages arising from the sale, resale or misuse of its products.

Siemens
Water Technologies
2430 Rose Place
Roseville, MN 55113
800.525.0658 phone

© 2008 Siemens Water Technologies Corp.
WS-PV2dr-DS-0608
Subject to change without prior notice.

PV and HP are trademarks of Siemens, its subsidiaries or affiliates.

The information provided in this literature contains merely general descriptions or characteristics of performance which in actual case of use do not always apply as described or which may change as a result of further development of the products. An obligation to provide the respective characteristics shall only exist if expressly agreed in the terms of the contract.

STD: 2-0600-8X11A | INTR_REF_NO

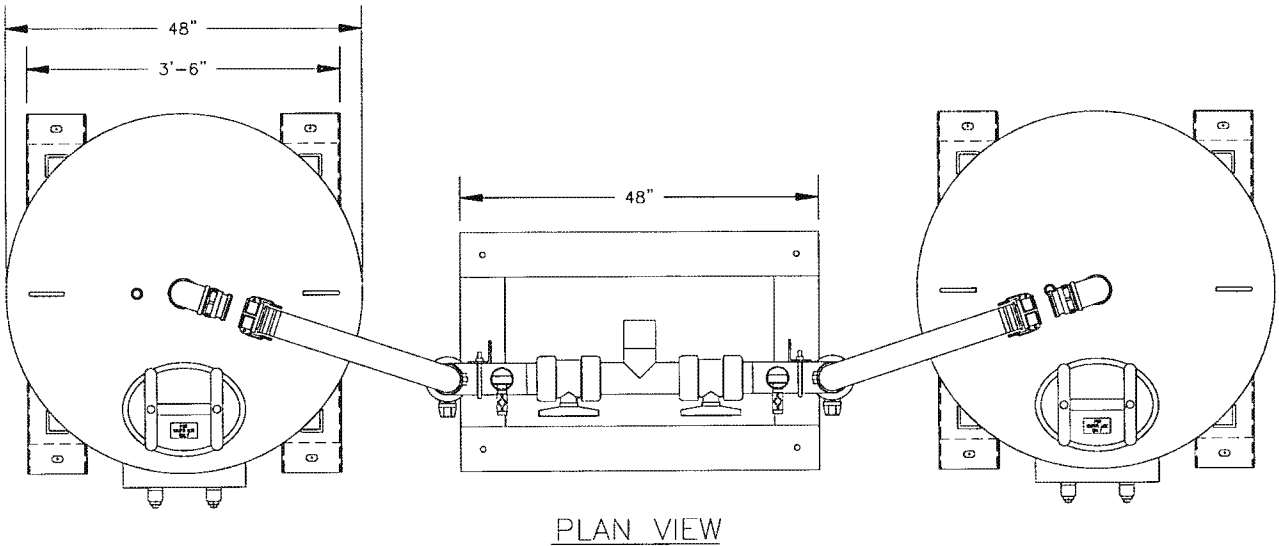

PLAN VIEW

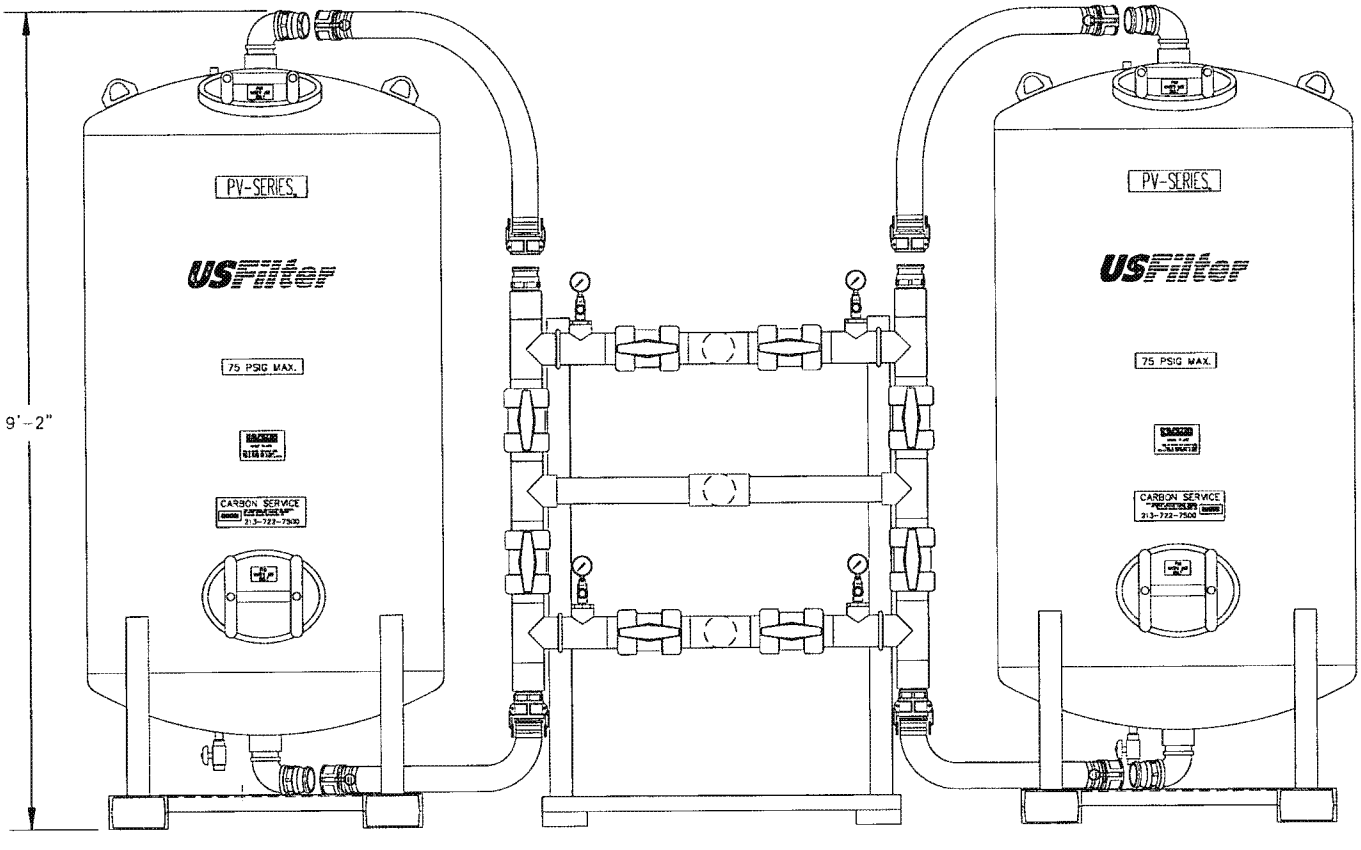

ELEVATION

COMPANY CONFIDENTIAL
THIS DOCUMENT AND ALL INFORMATION CONTAINED HEREIN ARE THE PROPERTY OF THE USFILTER AND/OR ITS AFFILIATES ("USF"). THE DESIGN CONCEPTS AND INFORMATION CONTAINED HEREIN ARE PROPRIETARY TO USF AND ARE SUBMITTED IN CONFIDENCE. THEY ARE NOT TRANSFERABLE AND MUST BE USED ONLY FOR THE PURPOSE FOR WHICH THE DOCUMENT IS EXPRESSLY LOANED. THEY MUST NOT BE DISCLOSED, REPRODUCED, LOANED OR USED IN ANY OTHER MANNER WITHOUT THE EXPRESS WRITTEN CONSENT OF USF. IN NO EVENT SHALL THEY BE USED IN ANY MANNER DETRIMENTAL TO THE INTEREST OF USF. ALL PATENT RIGHTS ARE RESERVED. UPON THE DEMAND OF USF, THIS DOCUMENT, ALONG WITH ALL COPIES AND EXTRACTS, AND ALL RELATED NOTES AND ANALYSES, MUST BE RETURNED TO USF OR DESTROYED, AS INSTRUCTED BY USF. ACCEPTANCE OF THE DELIVERY OF THIS DOCUMENT CONSTITUTES AGREEMENT TO THESE TERMS AND CONDITIONS.

DESIGNER: AJA	DATE: 6-11-01	TITLE: PV2000 SYSTEM W/ 3" PVC MANIFOLD & FLEX HOSES
CHECKER	DATE	CLIENT
ENGINEER	DATE	
MANAGER	DATE	USFilter — USFILTER/WESTATES, RED BLUFF, CA, 1-800-795-2664
FILE:		PROJECT
SCALE: NONE		DRAWING: 2PV2000w3PVCmani
		SHEET: 1 OF 1
		REV

Westates® granular reactivated carbon - AquaCarb® S Series

For Industrial and Remedial Water Treatment

Description
AquaCarb® S Series carbons are produced through thermal reactivation of approved grades of spent carbon at one of our state-of-the-art reactivation facilities. Through careful control of the residence time in the reactivation furnace, reactivation temperature, and reactivation gas composition, adsorbed contaminants on the spent carbon are removed and destroyed, and the carbon's internal pore structure is maintained as close to virgin condition as possible. AquaCarb® S Series reactivated carbons are pooled from a variety of sources, ensuring consistent product properties. The resulting carbon serves as an excellent economic alternative to virgin carbon for the removal of a broad range of organic contaminants from wastewater, process water, and groundwater streams.

Applications
Cost effective AquaCarb® S Series reactivated carbons have been demonstrated to provide excellent performance in a variety of liquid phase treatment applications, including the following:

- Removal of organic contaminants
- Pesticide removal
- Groundwater remediation
- Wastewater treatment
- Industrial process water treatment
- Biological activated carbon support

Quality Control
Each lot of reactivated carbon is identified by lot number, sampled, and analyzed in accordance with Siemens Water Technologies' QA/QC program. Siemens' laboratories are fully equipped to provide complete quality control analysis using ASTM standard test methods in order to assure the consistent quality of all Westates® carbons.

Our technical staff offers hands-on guidance in selecting the most appropriate system, operating conditions and carbon to meet your needs. For more information contact your nearest Siemens representative.

Features and Benefits:
- Reactivated carbons serve as an economical alternative to virgin carbon in many applications
- Use of reactivated carbons reduces the volume of spent carbon sent to landfill and encourages responsible usage of natural resources
- A detailed quality assurance program guarantees consistent quality from lot to lot and shipment to shipment
- Pooled reactivated carbons provide consistent properties and performance

Typical Properties	
Parameter	**AquaCarb® S**
Carbon Type	Reactivated Coconut/Coal
Mesh Size, U.S. Sieve	8 x 30
Iodine No., mg I_2/g	850 - 900
Abrasion Number, Wt. %	75
Apparent Density, g/cc	0.46 - 0.58
Moisture as Packed, Wt. %	3

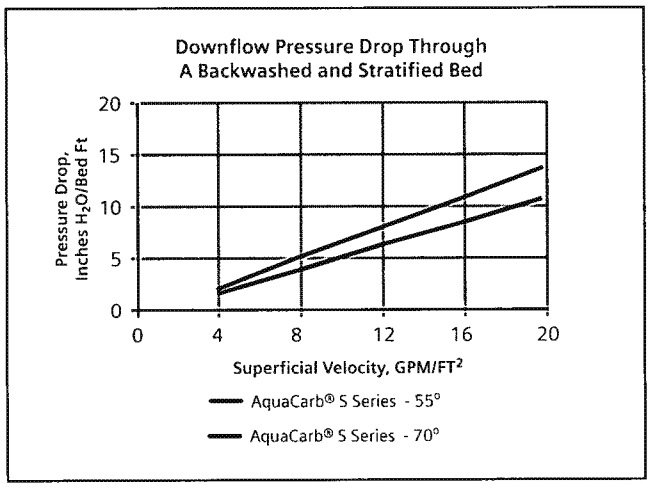

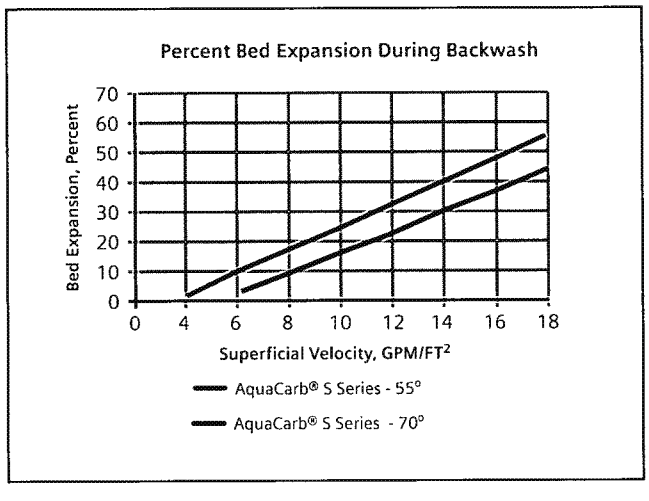

Safety Note: Under certain conditions, some compounds may oxidize, decompose or polymerize in the presence of activated carbon causing a carbon bed temperature rise that is sufficient to cause ignition. Particular care must be exercised when compounds that have a peroxide-forming tendency are being adsorbed. In addition the adsorption of VOCs will lead to the generation of heat within a carbon bed. These heats of reaction and adsorption need to be properly dissipated in order to fully assure the safe operation of the bed.

Wet activated carbon readily adsorbs atmospheric oxygen. Dangerously low oxygen levels may exist in closed vessels or poorly ventilated storage areas. Workers should follow all applicable state and federal safety guidelines for entering oxygen depleted areas.

All information presented herein is believed reliable and in accordance with accepted engineering practices. Siemens makes no warranties as to the completeness of this information. Users are responsible for evaluating individual product suitability for specific applications. Siemens assumes no liability whatsoever for any special, indirect or consequential damages arising from the sale, resale or misuse of its products.

Siemens
Water Technologies
2430 Rose Place
Roseville, MN 55113
800.525.0658 phone

© 2008 Siemens Water Technologies Corp.
WS-AQUASdr-DS-0308
Subject to change without prior notice.

AquaCarb and Westates are trademarks of Siemens, its subsidiaries or affiliates.

The information provided in this literature contains merely general descriptions or characteristics of performance which in actual case of use do not always apply as described or which may change as a result of further development of the products. An obligation to provide the respective characteristics shall only exist if expressly agreed in the terms of the contract.

www.siemens.com/water

IX48HF

Description:
IX48HF vessels are designed to treat a wide range of contaminated process streams. The vessels are equipped with under drains capable of a nominal maximum flowrate of 200 gpm. Maximum flowrate is dependent on treatment media and application. Projects with very low discharge requirements will require reduced flow rates and longer media contact time for best performance and removal efficiency.

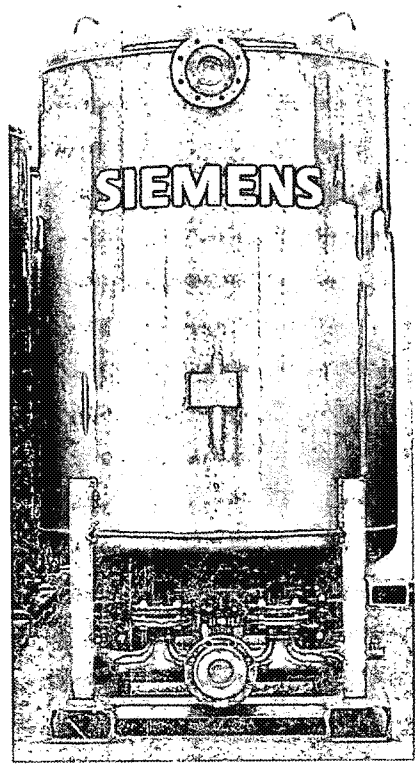

Standard Vessel Features

Diameter	48"
Side Shell Height	60"
Overall Height (Approx)	96"
Maximum Working Pressure	100 psi @ 150 Deg F
Design Criteria	ASME
ASME Code Stamped	No stamp on standard rental equipment
Seismic rating	Zone 4
Media Volume (max)	60 cuft
Material	Carbon Steel
Manway type	Elliptical
One (1) upper head	12" x 16"
Supports	Tube Channel
Lifting	Lifting Lugs
Interior Surface Prep	SSPC-SP5
Interior Surface Coating	Plasite 4110 35 mil DFT min
Exterior Surface Primer	Rust Preventive Epoxy 3 mil DFT min
Exterior Surface Coating	High Solids Urethane 3mil DFT min
Standard Color	Blue

Valve assembly, piping and miscellaneous

Piping:	
Underdrain Piping	3" Schedule 40 Carbon Steel
Resin Transfer Piping	2" Schedule 10 304L Stainless Steel
Valves (rental units):	
Process	4" butterfly valve with 3" CAM inlet/outlet connections
Resin Transfer	2" Flanged 316 Stainless Steel Full Port Ball Valve
Vent/Wash	2" Ball Valve
Sample Valve	1/2" Ball Valve
Pressure Gauge Assemblies	Two (2)

System weight

Vessel shipping weight	1,710 lb
Media weight	3,000 lb
Vessel operating weight	8,100 lb

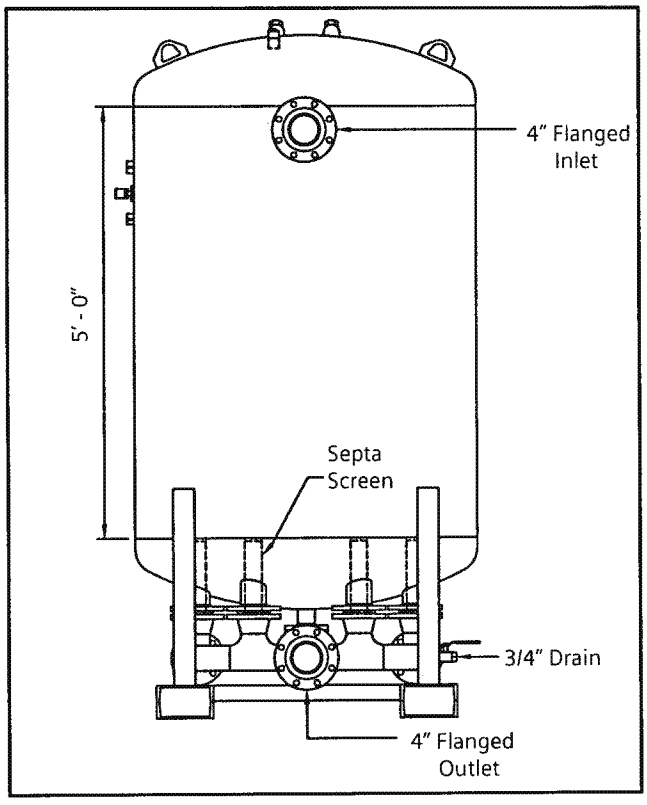

Front View

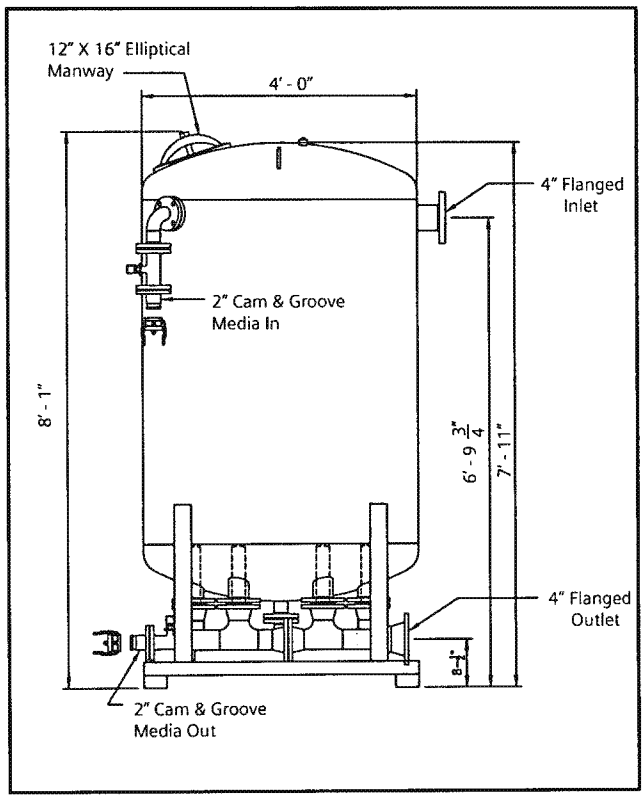

Side View

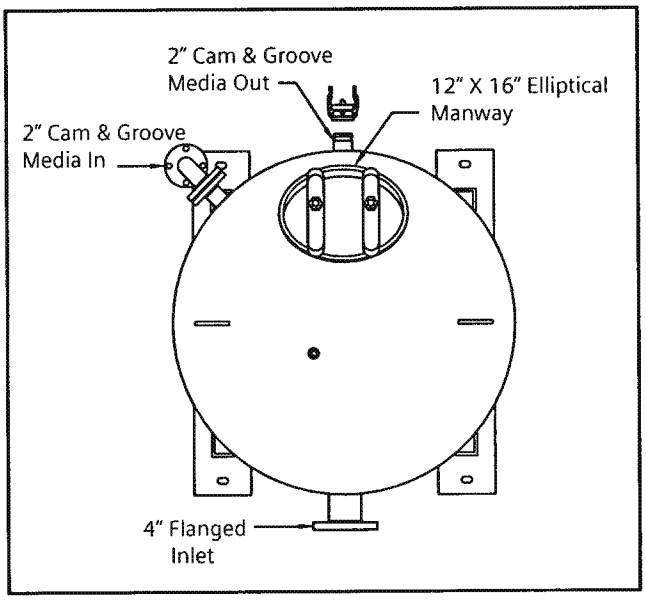

Top View

Siemens
Water Technologies
2430 Rose Place
Roseville, MN 55113
Tel: 651.638.1300
Fax: 651.633.6423

© 2008 Siemens Water Technologies Corp.
ES-IX48HFdr-DS-0508
Subject to change without prior notice.

The information provided in this literature contains merely general descriptions or characteristics of performance which in actual case of use do not always apply as described or which may change as a result of further development of the products. An obligation to provide the respective characteristics shall only exist if expressly agreed in the terms of the contract.

SIEMENS

USF A-284 ANION RESIN

Description:

USF A-284 is a Type I strong base gel anion resin consisting of a styrene divinylbenzene polymer matrix functionalized with a quaternary amine supplied in the chloride form. This resin when regenerated to the hydroxide form has the ability to remove anions and weak acids from aqueous solutions, such as carbonic and silicic acids. This resin is particularly well-suited for low silica effluent requirements and is tested kinetically to verify operating performance.

Chemical Properties

Functional Group	Trimethylamine
Ionic Form (as shipped)	Chloride
Moisture Content	43 - 48% (Cl form)
Exchange Capacity	1.4 meq / ml minimum (Cl form)
Kinetics	> 15 megohm (Siemens Kinetics Test)

Physical Properties

Particle Screen Sizing	
+16 Mesh	5% maximum
-50 Mesh	1% maximum
Effective Size	0.45 - 0.60 mm
Whole Beads (%)	90 minimum
Shipping Weight	44 lbs. / cu. ft.

Operating Conditions

Operating pH Range	0 to 14
Service Flow Rate	2 - 4 gpm / cu. ft.
Regenerant Flow Rate	0.25 - 0.5 gpm / cu. ft.
Rinse Flow Rate	0.25 - 0.5 gpm / cu ft. initially, then 1.5 gpm / cu. ft.
Rinse Volume	60 - 75 gallons / cu. ft.
Maximum Operating Temperature	140°F

TECH SHEET MED-408

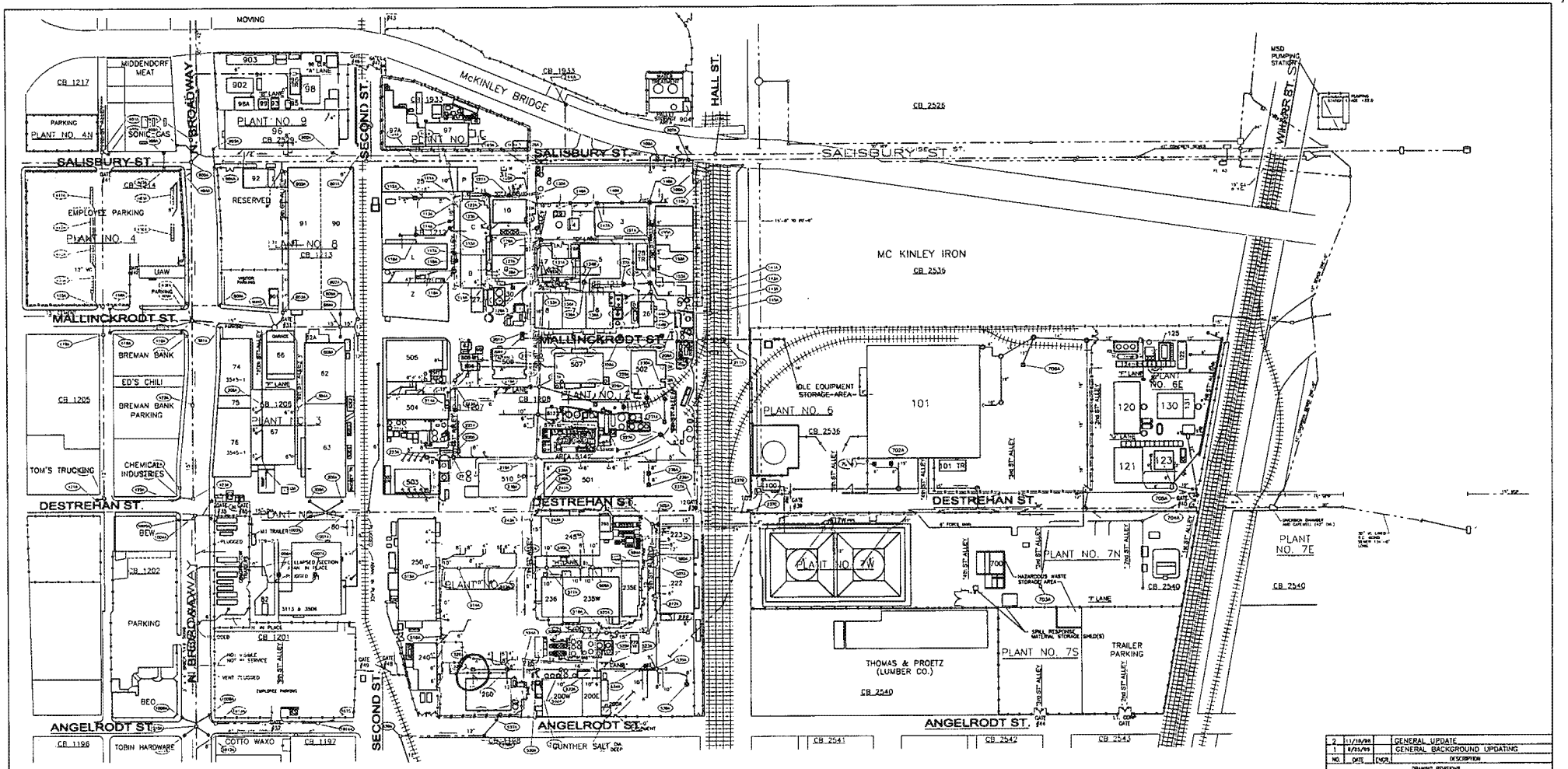

SEWER ELEVATION SCHEDULE

NO.	TOP OF MANHOLE	TOP OF EXPOS. MAIN	FLOW LINE	NO.	TOP OF MANHOLE	TOP OF EXPOS. MAIN	FLOW LINE	NO.	TOP OF MANHOLE	TOP OF EXPOS. MAIN	FLOW LINE	NO.	TOP OF MANHOLE	TOP OF EXPOS. MAIN	FLOW LINE	NO.	TOP OF MANHOLE	TOP OF EXPOS. MAIN	FLOW LINE	NO.	TOP OF MANHOLE	TOP OF EXPOS. MAIN	FLOW LINE	NO.	TOP OF MANHOLE	TOP OF EXPOS. MAIN	FLOW LINE
(B1A)				(B1A)		416.23	411.23	(B1A)				(B1A)				(B1A)				(B1A)		419.30		(B1A)			
(B1A)				(B1A)			412.00	(B1A)				(B1A)				(B1A)				(B1A)				(B1A)		419.05	411.05
(B1A)			401.26	(B1A)			413.54	(B1A)				(B1A)	419.29		408.27	(B1A)				(B1A)				(B1A)			
(B1A)				(B1A)		418.20		(B1A)				(B1A)				(B1A)				(B1A)				(B1A)			
(B1A)				(B1A)			405.30	(B1A)		418.41	409.11	(B1A)				(B1A)				(B1A)				(B1A)			
(B1A)				(B1A)				(B1A)		418.04	409.94	(B1A)				(B1A)				(B1A)				(B1A)			
(B1A)				(B1A)				(B1A)		418.18	410.76	(B1A)				(B1A)		417.94	412.44	(B1A)				(B1A)			
(B1A)				(B1A)		417.93		(B1A)		418.36	412.49	(B1A)				(B1A)				(B1A)				(B1A)			
(B1A)				(B1A)				(B1A)		419.78		(B1A)				(B1A)				(B1A)				(B1A)			
(B1A)				(B1A)		419.09	407.58	(B1A)		418.16	413.39	(B1A)				(B1A)				(B1A)				(B1A)			
(B1A)				(B1A)	419.11		404.01	(B1A)		418.53		(B1A)				(B1A)				(B1A)				(B1A)			
(B1A)		430.83	414.83	(B1A)	418.87		404.37	(B1A)		418.84		(B1A)			405.90	(B1A)		417.00	413.01	(B1A)				(B1A)			
(B1A)		419.63	410.63	(B1A)		417.67	409.37					(B1A)			413.00	(B1A)		418.21	413.61	(B1A)				(B1A)			
(B1A)		419.63		(B1A)								(B1A)			413.62	(B1A)				(B1A)				(B1A)			
(B1A)		418.52	412.42	(B1A)		418.52	411.32					(B1A)			407.23	(B1A)				(B1A)				(B1A)			
(B1A)		420.48	416.98	(B1A)	418.77		411.57					(B1A)	418.24		408.07	(B1A)				(B1A)				(B1A)			
(B1A)		420.01	417.31	(B1A)		418.55	418.55					(B1A)	418.34		404.92	(B1A)	419.34		405.22	(B1A)				(B1A)			
(B1A)	421.36		413.56	(B1A)		418.66	415.38					(B1A)	419.29		408.57	(B1A)				(B1A)				(B1A)			
(B1A)		418.78	414.78	(B1A)								(B1A)		419.30	419.50	(B1A)				(B1A)				(B1A)			
(B1A)		418.97	410.47	(B1A)								(B1A)		419.62		(B1A)				(B1A)				(B1A)			

LEGEND

- MANHOLE
- SURFACE DRAIN
- CURB DRAIN
- GATEWELL
- SUMP
- DOWNSPOUT
- BLOCKED
- PLG PLUGGED

SCALE:

0 100' 200' 300'

NO.	DATE	ENGR.	DESCRIPTION
2	11/19/99		GENERAL UPDATE
1	6/23/99		GENERAL BACKGROUND UPDATING

DRAWING REVISIONS

JOB NO. PXXXX PROJECT NO. AXXXX

tyco Healthcare Mallinckrodt

ST. LOUIS PLANT UTILITIES
SEWER LINE SYSTEMS

SITE STL PLANT ALL BLDG ALL FLOOR N/A
SCALE SEE GRAPHIC DATE 10/17/89
DR. BY S.SABO ENGR.
CHECKED
DRAWING NO. 5000-202-002 REV. 2

THIS DRAWING IS THE PROPERTY OF MALLINCKRODT AND IS NOT TO BE REPRODUCED, COPIED OR USED FOR ANY PURPOSE EXCEPT AS SPECIFIED BY MALLINCKRODT

1_BLK25.DWG

RIVER Mapping Application

County Assessor | City Assessor | Inside MSD | Help

Results

- Search Results 1 (1)
  - n 2nd, (1)
    - 3600 N 2ND ST

Select Map Base

Select Map Base

Default_Map Load

Find Address

Find Intersection

Find Facility

Find Parcel

Export Map

Zoom to Scale

Map Contents

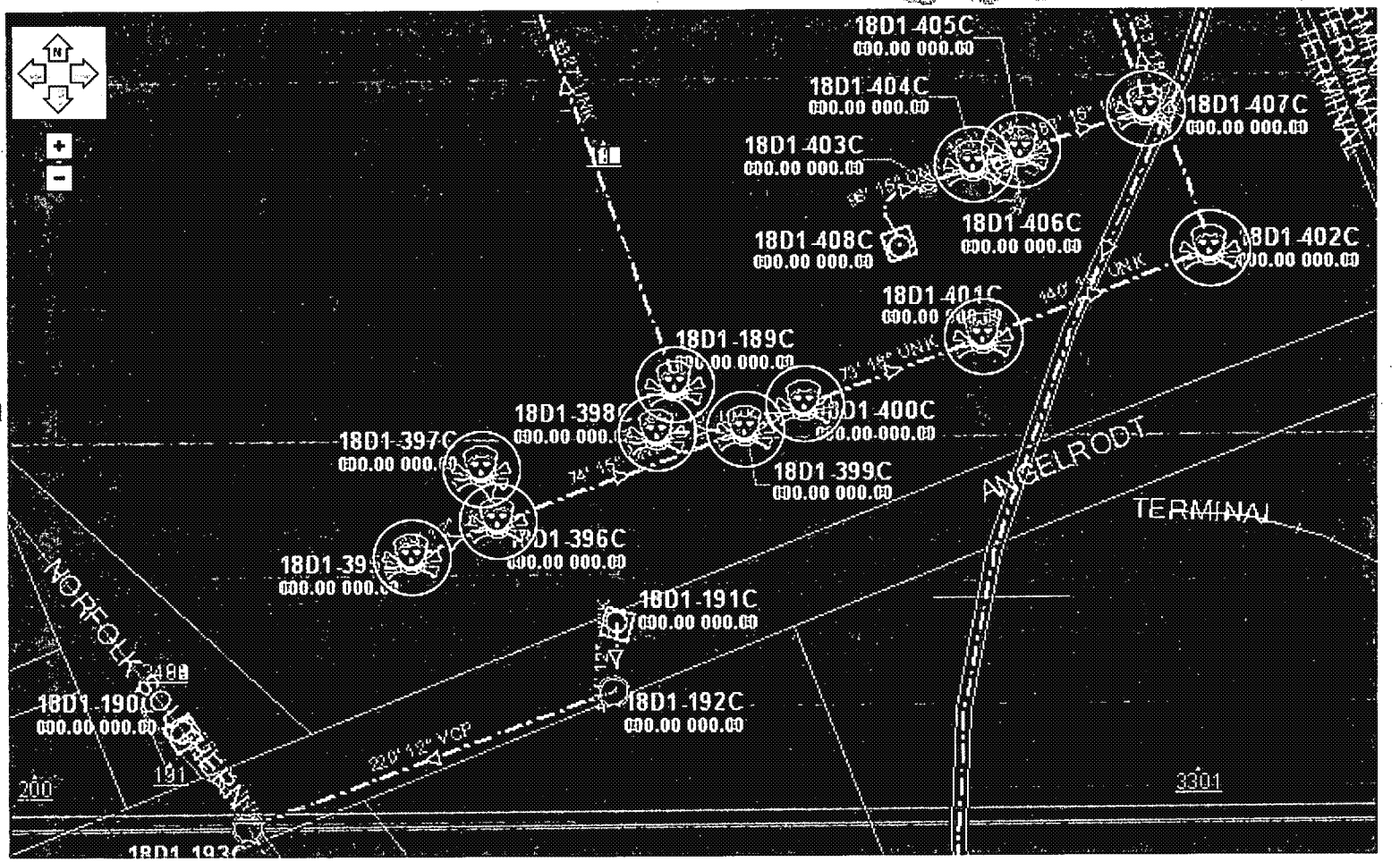

MSD 011556

RIVER Mapping Application

County Assessor | City Assessor | Inside MSD | Help

Results

- Search Results 1 (1)
  - n 2nd, (1)
    - 3600 N 2ND ST

Select Map Base

Select Map Base

Default_Map Load

Find Address

Find Intersection

Find Facility

Find Parcel

Export Map

Zoom to Scale

Map Contents

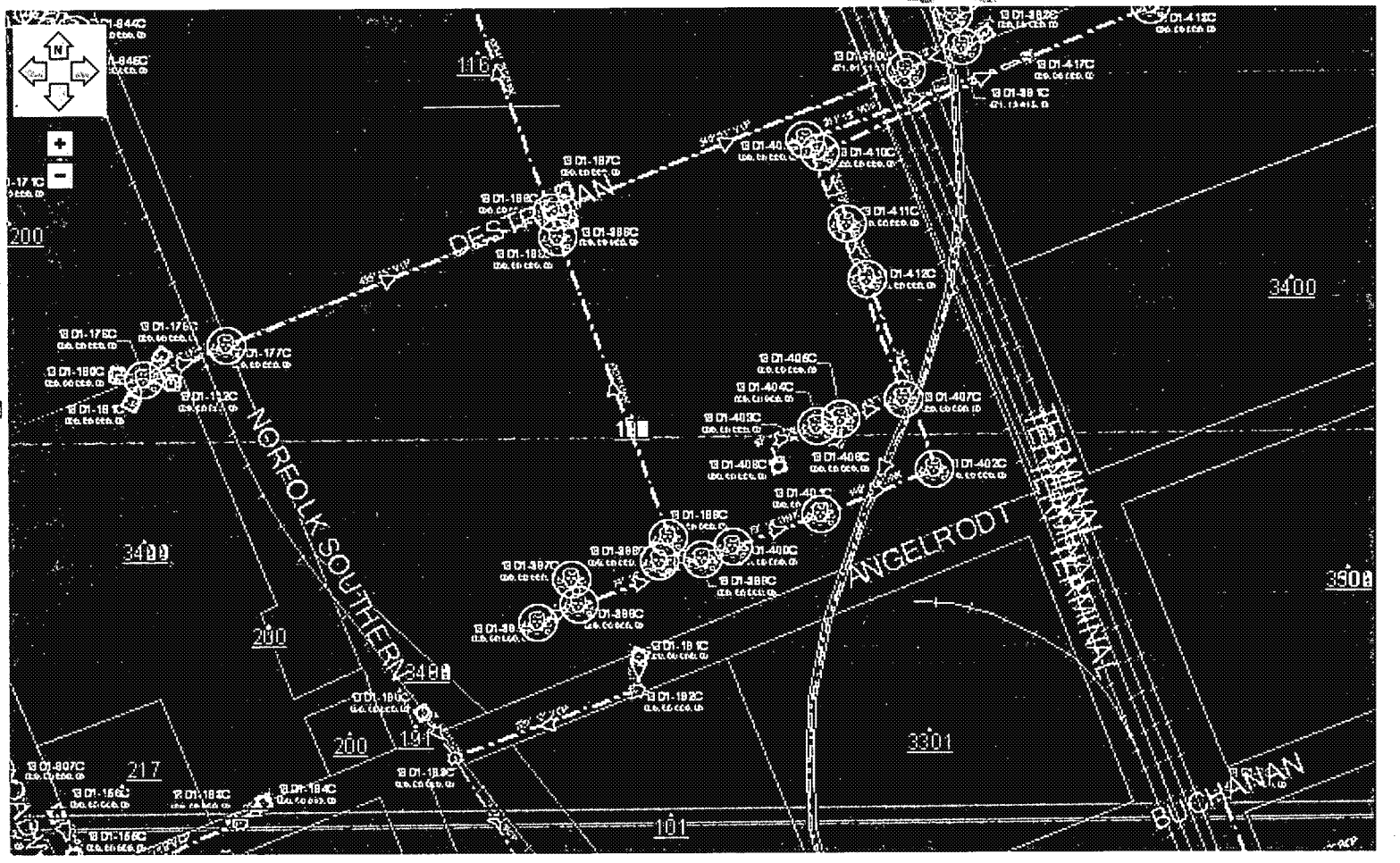

MSD 011557

Steve Grace

From: Meyer, Lisa A [Lisa.Meyer@Covidien.com]
Sent: Friday, October 29, 2010 11:43 AM
To: Steve Grace
Subject: RE: Special Discharge Application received yesterday...
Attachments: plant sewer map.pdf

Steve,
See my answers below in red. If you have additional questions, please call me. Thanks.

Lisa

From: Steve Grace [mailto:sgrace@stlmsd.com]
Sent: Tuesday, October 26, 2010 4:07 PM
To: Meyer, Lisa A
Subject: RE: Special Discharge Application received yesterday...

Hello Lisa,

Sorry for the delay. I have a few more follow-up questions:

Can I ask how you arrived at the 20,000 gallon per week average discharge? Each of the two storage tanks holds 20,000 gallons of water. It is the contractor's estimate that we will fill one per week with groundwater. We anticipate the discharge of one tank per week on average and a maximum of two tanks per week.

You indicated this volume could be higher during periods of heavy rain. Knowing that you will have 2-20,000 gallon storage tanks onsite, are there any contingencies should these periods of heavy rain result in volumes greater than 40,000 gallons? I don't want to run into a situation where you're asking for forgiveness instead of permission, especially if radioactivity is a concern, lol. If a storm event results in more water, the project will stop until the water in the excavation drains into the soil or it can be pumped out at the 20,000 - 40,000 gallons per week average rate.

You're looking to discharge to the MSD sewers along Angelrodt instead of the usual SP010 point? Is there any way you can identify the manholes in question along Angelrodt that you're looking to discharge to? If those can be better identified on a site map, that would be even better. Please see the attached site drawing. The manhole in Angelrodt is labeled 537A just south of Building 260 is the proposed loccation where the water will be discharged.

Please contact me with any questions.

Thanks again!
Steve

From: Meyer, Lisa A [mailto:Lisa.Meyer@Covidien.com]
Sent: Thursday, October 14, 2010 3:25 PM
To: Steve Grace
Subject: RE: Special Discharge Application received yesterday...

Steve,
The US Army Corps of Engineers is performing a cleanup on the Mallinckrodt property as a result of processes done for the federal government.

The CT project that we are requesting a Special Discharge permit for is related to Mallinckrodt contamination from an old chemical process done in the 1960s for the extraction of columbium and tantalum which contained natural uranium and thorium isotopes.

Steve,

1. How quickly will results be turned around? If they only have two 20,000 gallon tanks, and discharge 20,000 gal/week, they must have much quicker than one week turn around. And they say volume may be higher during heavy rains. I don't want to get into the inevitable problems when rains will generate much higher volumes. They need more storage tanks. They can support the number of additional tanks by providing info. on how they arrived at the 20,000 gal/week normal volume and how much extra storm water will be collected during various types of rain events.

2. Do the MSD sewers on Angelrodt go through Mallinckrodt's SP010? I mainly want to be sure that they are not discharging into a sewer that is below the interceptor and just goes to the river. We also need specific locations identified. They are pretty general. Please have them identify (and show on their maps) the specific discharge locations. (Or am I just not seeing it on the map?)

3. Regarding what to test for, my only additional thought is if this is what the other locations at Mallinckrodt have tested for. If so, then that seems fine.

4. Make sure they know that discharge cannot commence until we grant our approval. (We don't need problems with a hot potato issue like rad. discharges.)

5. If you haven't already, please make sure all questions, etc are discussed with Brian first. I understand that he may be unfamiliar with the situation, especially given that he's been here <2 months, but I want to keep him in the loop.

6. This letter is not date stamped. All incoming correspondence should be stamped, especially considering that the letter itself is dated Oct. 8. If Becky forgot, please remind her. If it was hand-delivered or whatever, please give to Becky to date stamp when you get them (or you can do it yourself).

Doug
10/26/10

TO: MALLINCKRODT INC [2112059600] file – SP809 for Construction and decon water from FUSRAP radioactive soil excavation. (aka SLDS)

ST LOUIS AIRPORT FUSRAP SITE [9012138501] file – SP801 for Treated excavation water from radioactive contaminated soil cleanup site. (aka SLAPS)

FROM: Nora Estopare

DATE: May 12, 2010

RE: Special Discharge On-Site Source Inspection

On 5/11/10, Steve Grace and I met with Ron Frerker of the USACOE along with Gwenan Skoba, Jerry Cross and others of Shaw Environmental & Infrastructure, Inc. We arrived at the SLDS site at 9:00 a.m. and later traveled to the SLAPS site arriving at 11:00 a.m. to make our site inspections. The purpose was to inspect the ongoing radioactive soil remediation and the associated pretreatment systems being used to treat excavation rainwater/groundwater accumulations prior to discharge into the MSD collection system. We also discussed MSD's ES-Retooling effort and explained that we needed maps showing the Record of Decision (ROD) boundary for both Formerly Utilized Sites Remedial Action Program (FUSRAP) sites to label no-entry manholes for MSD worker safety.

MALLINCKRODT INC [2112059600] – (aka SLDS)

Mallinckrodt had a process for extracting pure metals from thorium, radium and uranium ores. The waste generated during the Mallinckrodt extraction process is referred to as "CT" and was buried on the SLDS site in many locations. All but one of the on-site CT burial locations have been excavated/remediated and hauled to Utah or Idaho for disposal depending on the level of radioactivity. The remaining on-site CT burial location is scheduled to be excavated/remediated within the next year or two after the building over top of it has been razed.

Further processing after the extraction generated waste referred to as "MED". The MED was trucked out to the SLAPS site for disposal.

Any remaining radioactive raw materials were sent back to their place of origin after the extraction process was moved to WELDON SPRING (WSSRAP) [SOUR053000].

The SLDS combined sewer system that has been exposed to the radioactive wastes may be contaminated with CT, MED or both. However, the many subsequent years of wastewater flushing has removed most to all of the residual radioactive contamination.

There are two pretreatment systems on the SLDS property that are used to treat excavation rainwater/groundwater accumulations prior to discharge into the MSD collection system. The first is active and in the vicinity of a recently completed CT excavation/remediation. The second is inactive and discharges downgradient into the same MSD sewer line as the does the first. MSD installed a diverter in this sewer several years ago so that all of the SLDS associated discharges would be routed to the Bissell Treatment Plant rather than the Mississippi River.

Both pretreatment systems have at least two main holding tanks preceding 1-micron filtration, then if determined necessary, the capability for carbon adsorption and ion exchange. The

second system has an initial holding tank and 50 to 60-micron filtration preceding the main holding tanks. The 1-micron filtration has demonstrated sufficient removal efficiency so that ion exchange with resin selective of uranium is unnecessary. The carbon adsorption pretreatment for the removal of PCBs has also been determined to be unnecessary.

(Note: The ion exchange resin has proven to be effective in removing uranium. However, a previous site experience using the ion exchange unit resulted in elevated uranium levels in the effluent due to resin interference from a potassium chloride release. Covidian released potassium chloride that flowed into an ongoing CT remediation excavation. The rainwater/groundwater containing potassium chloride acted to recharge the ion exchange unit, releasing the absorbed uranium. Consequently, the ion exchange unit is only used if absolutely necessary which hasn't been the case in some time.)

Any time a new CT remediation area is entered, the first two batches of rainwater/groundwater are settled in the main holding tanks, sampled without any pretreatment and the analytical results are sent to Steve Grace for approval. After receiving Steve's approval, the main holding tanks are discharged through the 1-micron filter and discharge continues until the CT remediation area is completed.

ST LOUIS AIRPORT FUSRAP SITE [9012138501] – (aka SLAPS)

The MED contamination at the SLAPS site is surficial in comparison to the CT contamination at the SLDS site. The HISS property was the single above ground MED disposal location near the center of the ROD boundary. There is also MED deposition along the various former haul roads.

MED remediation is currently being completed on vicinity property VP-02(L) with rainwater accumulations being stored in Baker holding tanks staged on the HISS property. MED soil remediation is also being completed on the Futura property with rainwater accumulations being stored in additional Baker holding tanks.

Any time a new MED remediation area is entered, the first two batches of rainwater/groundwater are settled in the Baker holding tanks, sampled without any pretreatment and the analytical results are sent to Steve Grace for approval. After receiving Steve's approval, rainwater from the Baker holding tanks is pretreated with1-micron filtration and discharge continues until the MED remediation area is completed. The Special Discharge approval specifies pretreatment with 2-micron filtration, but 1-micron is used as a quality assurance step. There is the ability to go to 2-micron filtration should there be filter plugging problems at a particular MED remediation location. There are not any ion exchange units in place since the SLAPS site does not have the heavy metal problems that the SLDS site does.

Previously, physical chemical methods including ion exchange were used and unsuccessful in removing selenium. For this reason, biotreatment was selected for the removal of selenium and occurred in tankage along McDonnell Boulevard. Later, the requirement for selenium pretreatment was modified by MSD to no selenium pretreatment required at a rate limited discharge based on analytical provided when a new MED remediation area is entered.

Follow-up

Steve has already renewed both the SLDS and SLAPS Special Discharge approvals extending them for another two years with July 2012 expiration dates.

Ron Frerker has instructed Shaw to revise their SLAPS site map to include the entire ROD boundary. The SLDS map provided in 2008 shows the current ROD for our no-entry manhole labeling purposes.

Metropolitan St. Louis Sewer District

Division of Environmental Compliance
10 East Grand Avenue
St. Louis, MO 63147-2913
Phone: 314.768.6200 www.stlmsd.com

SP849

January 19, 2011

Lisa Meyer
MALLINCKRODT
3600 North Second St.
St. Louis, MO 63147

Dear Ms. Meyer:

We have reviewed your application dated January 14, 2011 requesting approval to discharge 40,000 gallons of wastewater to the Metropolitan St. Louis Sewer District for treatment. This wastewater is accumulated rainwater formerly in contact with potentially radioactive soils at the Mallinckrodt facility located at 3600 North Second Street, St. Louis, Missouri. We understand that the wastewater will be discharged through sampling point 001. Information provided in the application indicated the soil in question was excavated during plant maintenance activities and stored in multiple roll-off boxes. During the removal of the soil in question for transport off-site, the accumulated rainwater was collected and stored in Baker tanks.

Based on the information you provided, this wastewater meets MSD Ordinance 12559 standards and is approved for discharge into a sanitary or combined sewer on site. Due to the normal wastewater flow rate through sampling point 001, the discharge is limited to 750 gallons per hour. This approval is valid for 30 days from the date of this letter.

You must be certain the waste is discharged into a sanitary or combined sewer inlet only. This letter does not authorize any discharge to a separate storm sewer, or to any watercourse, as any such discharge would be in violation of state and federal laws. **Please notify me at the number below when the discharge is to commence, and please ensure the onsite personnel discharging the wastewater in question are provided with a copy of this letter.**

For billing purposes associated with this wastewater, you must confirm the volume of this wastewater discharged to us, in writing, at the completion of the discharge. This report is due no later than 28 days after this approval expires. Please refer to this letter and include the date of the discharge when providing that figure. Under the provisions of Ordinance 13021, you will be billed by invoice at the billing rate in effect at the time of discharge. The current rate, contained in MSD Ordinance 13021 is $2.02 per hundred cubic feet ($2.70 per thousand gallons). Using the proposed discharge volume provided in your application, it is estimated that you will be discharging approximately 54 hundred cubic feet. Please do not pay this amount until you receive our invoice.

This discharge has been approved based upon the information and sample analysis you provided, and is subject to the conditions stated above. This approval may be revoked by the District at any time if any of the information is found to be incorrect, or if the conditions of this approval are violated. Also, if the discharge causes any operational or maintenance problem within the District's collection or treatment system, or results in violations of any conditions of the District's NPDES permit, Mallinckrodt will be considered responsible for damages.

If you have any questions, please call me at (314) 436-8755.

Sincerely,
METROPOLITAN ST. LOUIS SEWER DISTRICT

Steven M. Grace

Steve Grace
Environmental Assistant Engineer

bv

pc: Brian Gibson
Doug Mendoza

File: IU, MALLINCKRODT INC [2112059600]

C1A

SD EVALUATION CHECKLIST - ON SITE

APPLICATION INFORMATION

Source Name: Mallinckrodt Inc.

Premise Address: 3600 N. 2nd St.

Send approval letter to applicant

Evaluated by: SMG

Date: 1/19/11

Application Dated: 1/14/11 Received: 1/18/11 All Requested Info. Received: 1/18/11

SOURCE FILING/DESCRIPTION

1 - Source in PIMS? (Y) / N
2 - If No, on IU Cross-Ref list? * Y / N
3 - If No, MSD Account # from E-CIS? Y / N
4 - If none, on "Source" list (pre-IMS)? ** Y / N
5 - If No, assigned SOUR# from PIMS.

* o:\costrecovery\cross reference xls file

** o:\costrecovery\sourlist xls file

SOURCE TYPE (circle): (IU) / Dead IU / SD

INDUSTRY ID: 21120596-00

Sample Point: No. Assigned: 849 Description: accumulated rainwater formerly in contact w/potentially radioactive soils

Normal WW flow from premise? N/A _____ ccf/month, 1,000 GPD, _____ GPH. @ SP001

REGULATORY STATUS

Is waste a Hazardous Waste? (N) / Y

Categorical standards apply? (N) / Y

Contain PCB/ asbestos/ radioactive/ dioxin/ used oil? (N) / Y

Regulatory Agency Oversight? (N) / Y

DISCHARGE CONSIDERATIONS At MSD's connection:

Ordinance Limits (12559, p32) exceeded? (N) / Y

Ordinance other limits exceeded (dye, flash pt <140F, temp >140F, obstruction, nuisance foaming/odor, corrosion causing): (N) / Y

Water Quality Standard exceeded? (N) / Y

Fumes in sewer exceed PEL/TLV limits? (N) / Y

Vapors in sewer exceed 10% of LEL? (N) / Y

RECOMMENDATION: (APPROVE) / DENY (cc WWTP Mgr for timed discharge)

APPROVAL CONDITIONS:

Timed Discharge (COD/BOD/WQ/foam): N / (Y) Limit = 750 gal/hour (due to normal WW flow @ SP001)

Require Treatment before Discharge? (N) / Y

Laboratory analysis fee due? (N) / Y $_____

SMR required? (N) / Y Frequency/analysis: _____

SMR log: (N/A) / Remediation.xls / Nonremediation.xls

Volume Billing applies (water unmetered or credited)? N / (Y)

Bill High Strength? (N) / Y Yes, If use >60,000 gal/month water ___and, > norm WW strgth

Surcharge calculation attached: N/A / (N) / Y

Expiration log updated: (N/A) / N / Y

O:\CostRecovery\Special Discharge\C1a.Checklist.doc

Steve Grace

From: Steve Grace
Sent: Tuesday, December 14, 2010 4:06 PM
To: 'lisa.meyer@covidien.com'
Subject: A follow-up to our phone call this afternoon...

Hello Lisa,

Regarding our phone call earlier this afternoon, approval of both of the wastewater streams in question would require a representative sample of each submitted for laboratory analysis of:

pH
TSS
Gross alpha - 15 pCi/L
Gross beta - 50 pCi/L
Uranium (234, 235, 238), radium (226 and 228), and thorium (228 and 230) isotopes
30 mg/L

5 pCi/L — drinking water standards

Please contact me if you have any questions or require additional information.

Thanks,
Steve

MSD limits

gross alpha - 3,000 pCi/L
gross beta -
Th 228 - 2,000 pCi/L
Th 230 - 1,000 pCi/L
Th 232 - 300 pCi/L
Uranium - 3,000 pCi/L
Ra 226 - 10 pCi/L
Ra 228 - 30 pCi/L

COVIDIEN

To: Mr. Steve Grace

Company: MSD Environmental Compliance

Date: January 14, 2011

Health, Safety, Environmental

Lisa Meyer
Senior HSE Engineer

Covidien/Mallinckrodt
3600 N. Second St.
St. Louis, Missouri 63147

Telephone 314-654-3374
Facsimile 314-654-1251

- ☐ For your information
- X Please respond
- ☐ Urgent
- ☐ Confidential

Comments:

Dear Mr. Grace,

Attached please find an application for the Special Discharge of an estimated 40,000 gallons of wastewater accumulated from soil storage boxes. If you have any questions or need additional information, please contact me.

Thank you,

Lisa Meyer

Metropolitan St. Louis Sewer District

Phone No. (314) 436-8710

Division of Environmental Compliance, 10 East Grand Avenue, St. Louis, Missouri 63147 Fax No. (314) 436-8766

APPLICATION FOR SPECIAL DISCHARGE APPROVAL

I. WASTEWATER SOURCE IDENTIFICATION:

Site Name: Mallinckrodt

Premise Address: 3600 North 2nd St.

City: St. Louis State: MO Zip: 63147

Owner: Mallinckrodt

Contact Person: Lisa Meyer

Title: Senior HSE Engineer

Phone: 314.654.3374 Fax: 314.654.1251

II. APPLICANT (mailing information):

Applicant Name: Lisa Meyer

Title: Senior HSE Engineer

Company Name: Mallinckrodt

Mailing Address: 3600 North 2nd St.

City: St. Louis State: MO Zip: 63147

Phone: 314.654.3374 Fax: 314.654.1251

III. A. MATERIAL TO BE DISCHARGED (check all applicable boxes):

1. Wastewater description/location: Accumulated rainwater in soil storage boxes/West side of plant near AFI complex
2. Process/activity generating wastewater: Excavated soil from plant maintenance activities was stored in multiple roll off boxes. During the removal of these soils for transport, rainwater was collected and stored into two(2) Baker Tanks (20,000 gallons each). Both of the Baker tanks were sampled and analyzed per MSD requirements.
3. Physical and chemical composition: List all constituents, and known or potentially present regulated contaminants below.

   ☐ See separate listing enclosed, and/or ☑ See analytical results enclosed, and/or ☐ Material Safety Data Sheet enclosed.

DESCRIPTION	RANGE	UNIT

DESCRIPTION *(continued)*	RANGE	UNIT

4. Is this wastewater from a process subject to EPA's categorical standards in 40 CFR Subchapter N? ☐ Yes ☑ No
   a. If yes, the applicable standards are in: 40 CFR Part _____, Subpart _____ ☐ Existing source ☐ New source
5. Does this wastewater contain polychlorinated biphenyls, asbestos or radioactive material? ☑ Yes ☐ No
   a. If yes, describe: Historical processes performed at the plant have caused soils in some areas to potentially have radioactive material. Analytical results attached.
6. Representative sample: ☑ Laboratory results attached, and/or ☐ Sample provided (1/2 gallon minimum, clear container)
   a. Sample collection point/location: _____ Collection method: _____
   b. Sampler's name/Co.: _____ Sample date/time: _____
   c. Attach chain of custody as available
7. Discharge will occur over the following time period: ☑ < 30 days ☐ ≥ Two years ☐ Other: _____
   a. Expected total volume of wastewater to be discharged over the time period above: 40,000 Gallons
   b. Proposed discharge volume: 40,000 Gallons, at a frequency of: ☑ One time ☐ Daily ☐ Weekly ☐ Monthly ☐ Once/three months ☐ Once/six months ☐ Other: _____
8. Pretreatment of wastewater prior to discharge: ☑ None ☐ Yes, describe: _____
   a. If yes, attach site plan, pretreatment system schematic, and design specifications.
9. Wastewater from a remediation project under: ☐ Superfund/CERCLA ☐ RCRA ☐ Voluntary program ☐ UST ☑ Not applicable
   a. If from a remediation project, briefly describe the past and present utilization of the property: _____

III.B. MATERIAL FROM UNDERGROUND STORAGE TANK SOURCE

☑ **Not applicable (go to Section IV)**

Please answer the following questions if you are requesting to discharge wastewater associated with an underground storage tank system.

1. a. Wastewater from: ☐ Inside UST(s) ☐ UST system pit ☐ Excavation outside UST system pit ☐ Monitoring well ☐ Groundwater remediation system

   b. UST project involves wastewater from: ☐ UST(s) closed in place ☐ UST(s) removed ☐ Remediation ☐ Upgrade ☐ Maintenance activities ☐ Well monitoring ☐ Other, explain: _____

   c. If wastewater is from a closure project, how long has UST(s) been out of service: _____ years

2. a. State assigned UST site identification number: _____ ☐ Not applicable

   b. Number of USTs affected: _____ ☐ Unknown

   c. For the UST(s) involved, their state identification number(s): _____ ☐ Not applicable

   d. Service Station Identification Number, as applicable: _____

3. Tank contents/former contents: ☐ Gasoline ☐ #2 diesel ☐ Used oil ☐ Unknown ☐ Other: _____

IV. DISCHARGE LOCATION

1. ☑ On-site. Describe proposed point of entry to sewer and the discharge rate (must be a sanitary or combined sewer): _____

   plant sewer to SP001 _____ Note: Range of discharge must not surcharge sewer line.

2. ☐ Haul to MSD Bissell Point Hauled Waste Receiving Station at 10 E. Grand, St. Louis, MO.

   a. Transporters Name: _____ and MSD Hauler ID Number: _____

   b. Hazardous Waste Certification:

   For wastewater which is hauled to MSD's Bissell Point Hauled Waste Receiving Station, I hereby certify that to the best of my knowledge and belief, the above hauled waste is not classified as a RCRA "hazardous waste" as defined by the MDNR in 10 CSR 25 or USEPA in 40 CFR Part 261.

   Applicant Name (print): _____

   Signature: _____ **Date:** _____

ADDITIONAL INFORMATION:

_____

_____

_____

_____

_____

_____

V. APPLICANT SIGNATURE AND CERTIFICATION

This application must be signed by the applicant: either the source contact, or a contractor or agent directly responsible for site activities.

I hereby certify that I am directly responsible for activities at the site regarding the wastewater to be discharged, and to the best of my knowledge and belief, based on appropriate inquiry, the information in this application is true, complete, and accurate. The samples or analyses submitted are representative of the materials to be discharged. If granted approval to discharge, I agree to abide by the MSD Ordinances, and all applicable federal, state and local regulations. I agree to pay the costs of any pre-approval analyses performed by MSD and to pay any applicable disposal charges for the volume and strength of the wastes discharged.

Applicant Name (print): Lisa Meyer

Signature: Lisa Meyer **Date:** 01/14/11

FOR MSD USE ONLY:

File Name: ID No: Sample Point No.

TEKLAB, INC.

5445 HORSESHOE LAKE ROAD
COLLINSVILLE. ILLINOIS 62234

ENVIRONMENTAL TESTING LABORATORY

TEL: 618-344-1004
FAX: 618-344-1005

January 11, 2011

Lisa Meyer
Mallinckrodt, Inc.
3600 North Second Street
St. Louis, MO 63147
TEL: (314) 654-3374
FAX: (314) 654-1251

ACCREDITED IN ACCORDANCE WITH nelac
NELAP Accredited #100226

RE: Roll-Off Decant Water

WorkOrder: 10120871

Dear Lisa Meyer:

TEKLAB, INC received 2 samples on 12/22/2010 11:00:00 AM for the analysis presented in the following report.

Samples are analyzed on an as received basis unless otherwise requested and documented. The sample results contained in this report relate only to the requested analytes of interest as directed on the chain of custody. IL ELAP and NELAP accredited fields of testing are indicated by the letters NELAP under the Certification column.

All quality control criteria applicable to the test methods employed for this project have been satisfactorily met and are in accordance with NELAP except where noted. The following report shall not be reproduced, except in full, without the written approval of Teklab, Inc.

If you have any questions regarding these tests results, please feel free to call.

Sincerely,

Heather A. White

Heather A. White
Project Manager
(618)344-1004 ex 20

TEKLAB, INC.

5445 HORSESHOE LAKE ROAD
COLLINSVILLE, ILLINOIS 62234

ENVIRONMENTAL TESTING LABORATORY

TEL: 618-344-1004
FAX: 618-344-1005

Client: Mallinckrodt, Inc.
Project: Roll-Off Decant Water
LabOrder: 10120871
Report Date: 11-Jan-11

CASE NARRATIVE

Cooler Receipt Temp: 4.8 °C

State accreditations:

KS: NELAP #E-10347 | KY: UST #0073 | MO: DNR #00930 | AR: ADEQ #70-028-0 | LA: NELAP #166493

Qualifiers

DF - Dilution Factor	**B** - Analyte detected in the associated Method Blank	**C** - Client requested RL below PQL
RL - Reporting Limit	**J** - Analyte detected below reporting limits	**D** - Diluted out of sample
ND - Not Detected at the Reporting Limit	**R** - RPD outside accepted recovery limits	**E** - Value above quantitation range
Surr - Surrogate Standard added by lab	**S** - Spike Recovery outside accepted recovery limits	**H** - Holding time exceeded
TNTC - Too numerous to count (> 200 CFU)	**X** - Value exceeds Maximum Contaminant Level	**MI** - Matrix interference
Q - QC criteria failed or noncompliant CCV	**#** - Unknown hydrocarbon	**DNI** - Did not ignite
NELAP - IL ELAP and NELAP Accredited Field of Testing	**IDPH** - IL Dept. of Public Health	

TEKLAB, INC.

5445 HORSESHOE LAKE ROAD
COLLINSVILLE, ILLINOIS 62234

ENVIRONMENTAL TESTING LABORATORY

TEL: 618-344-1004
FAX: 618-344-1005

LABORATORY RESULTS

Client: Mallinckrodt, Inc.
WorkOrder: 10120871
Lab ID: 10120871-001
Report Date: 11-Jan-11

Client Project: Roll-Off Decant Water
Client Sample ID: 3167SD-1
Collection Date: 12/21/2010 7:25:00 AM
Matrix: AQUEOUS

Analyses	Certification	RL	Qual	Result	Units	DF	Date Analyzed	Analyst
EPA 900.0 MODIFIED								
Gross Alpha/Beta		0		**See Attached**	pci/L	1	12/29/2010	SUB
EPA 903.1/904.0, RADIUM 226/228								
Radium-226		0		**See Attached**	pci/L	1	1/6/2011	SUB
Radium-228		0		**See Attached**	pci/L	1	1/6/2011	SUB
SEE ATTACHED FOR SUBCONTRACTING ANALYSIS								
Subcontracted Analysis		0		**See Attached**		1	1/7/2011	SUB
STANDARD METHOD 18TH ED. 4500-H B, LABORATORY ANALYZED								
Lab pH	NELAP	1.00		**7.52**		1	12/22/2010 3:20:00 PM	AV
STANDARD METHODS 18TH ED. 2540 D								
Total Suspended Solids	NELAP	6		**84**	mg/L	1	12/23/2010 10:00:00 AM	RS

Sample Narrative

EPA 900.0 modified

Analysis performed by Pace Analytical Services, Inc.

EPA 903.1/904.0, Radium 226/228

Analysis performed by Pace Analytical Services, Inc.

See Attached for Subcontracting Analysis

Analysis performed by Pace Analytical Services, Inc.

TEKLAB, INC.

5445 HORSESHOE LAKE ROAD
COLLINSVILLE. ILLINOIS 62234

ENVIRONMENTAL TESTING LABORATORY

TEL: 618-344-1004
FAX: 618-344-1005

LABORATORY RESULTS

Client: Mallinckrodt, Inc.
WorkOrder: 10120871
Lab ID: 10120871-002
Report Date: 11-Jan-11

Client Project: Roll-Off Decant Water
Client Sample ID: 3167SD-2
Collection Date: 12/21/2010 7:25:00 AM
Matrix: AQUEOUS

Analyses	Certification	RL	Qual	Result	Units	DF	Date Analyzed	Analyst
EPA 900.0 MODIFIED								
Gross Alpha/Beta		0		**See Attached**	pci/L	1	12/30/2010	SUB
EPA 903.1/904.0, RADIUM 226/228								
Radium-226		0		**See Attached**	pci/L	1	1/6/2011	SUB
Radium-228		0		**See Attached**	pci/L	1	1/6/2011	SUB
SEE ATTACHED FOR SUBCONTRACTING ANALYSIS								
Subcontracted Analysis		0		**See Attached**		1	1/7/2011	SUB
STANDARD METHOD 18TH ED. 4500-H B, LABORATORY ANALYZED								
Lab pH	NELAP	1.00		**7.43**		1	12/22/2010 3:20:00 PM	AV
STANDARD METHODS 18TH ED. 2540 D								
Total Suspended Solids	NELAP	6		**212**	mg/L	1	12/23/2010 10:00:00 AM	RS

Sample Narrative

EPA 900.0 modified

Analysis performed by Pace Analytical Services, Inc.

EPA 903.1/904.0, Radium 226/228

Analysis performed by Pace Analytical Services, Inc.

See Attached for Subcontracting Analysis

Analysis performed by Pace Analytical Services, Inc.

TEKLAB, INC.

5445 HORSESHOE LAKE ROAD
COLLINSVILLE, ILLINOIS 62234

ENVIRONMENTAL TESTING LABORATORY

TEL: 618-344-1004
FAX: 618-344-1005

RECEIVING CHECK LIST

Client: Mallinckrodt, Inc.
Project: Roll-Off Decant Water
Lab Order: 10120871
Report Date: 11-Jan-11

Carrier: Jacob Grimes

Received By: MLD

Completed by: Timothy W. Mathis
On: 22-Dec-10

Reviewed by: Elizabeth A. Hurley
On: 22-Dec-10

Pages to follow: Chain of custody 1 Extra pages included 16

Shipping container/cooler in good condition?	Yes ☑	No ☐	Not Present ☐	Temp °C 4.8
Type of thermal preservation?	None ☐	Ice ☑	Blue Ice ☐	Dry Ice ☐
Chain of custody present?	Yes ☑	No ☐		
Chain of custody signed when relinquished and received?	Yes ☑	No ☐		
Chain of custody agrees with sample labels?	Yes ☑	No ☐		
Samples in proper container/bottle?	Yes ☑	No ☐		
Sample containers intact?	Yes ☑	No ☐		
Sufficient sample volume for indicated test?	Yes ☑	No ☐		
All samples received within holding time?	Yes ☑	No ☐		
Reported field parameters measured:	Field ☐	Lab ☑	NA ☐	
Container/Temp Blank temperature in compliance?	Yes ☑	No ☐		

When thermal preservation is required, samples are compliant with a temperature between 0.1°C - 6.0°C, or when samples are received on ice the same day as collected.

Water - vials have zero headspace?	Yes ☐	No ☐	No VOA vials	☑
Water - TOX containers have zero headspace?	Yes ☐	No ☐	No TOX containers	☑
Water - pH acceptable upon receipt?	Yes ☑	No ☐		

Any No responses must be detailed below or on the COC.

Pace Analytical®
www.pacelabs.com

Pace Analytical Services, Inc.
1638 Roseytown Road - Suites 2,3,4
Greensburg, PA 15601
(724)850-5600

January 11, 2011

Ms. Heather White
Teklab, Inc.
5445 Horseshoe Lake Road
Collinsville, IL 62234

RE: Project: 10120871
Pace Project No.: 3039229

Dear Ms. White:
Enclosed are the analytical results for sample(s) received by the laboratory on December 23, 2010. The results relate only to the samples included in this report. Results reported herein conform to the most current NELAC standards, where applicable, unless otherwise narrated in the body of the report.

If you have any questions concerning this report, please feel free to contact me.

Sincerely,

Robbin Robl

robbin.robl@pacelabs.com
Project Manager

Enclosures

REPORT OF LABORATORY ANALYSIS

This report shall not be reproduced, except in full,
without the written consent of Pace Analytical Services, Inc..

Pace Analytical Services, Inc.
1638 Roseytown Road - Suites 2,3,4
Greensburg, PA 15601
(724)850-5600

CERTIFICATIONS

Project: 10120871
Pace Project No.: 3039229

Pennsylvania Certification IDs
1638 Roseytown Road Suites 2,3&4, Greensburg, PA 15601
Alabama Certification #: 41590
Arizona Certification #: AZ0734
Arkansas Certification
California/NELAC Certification #: 04222CA
Colorado Certification
Connecticut Certification #: PH 0694
Delaware Certification
Florida/NELAC Certification #: E87683
Guam/PADEP Certification
Hawaii/PADEP Certification
Idaho Certification
Illinois/PADEP Certification
Indiana/PADEP Certification
Iowa Certification #: 391
Kansas/NELAC Certification #: E-10358
Kentucky Certification #: 90133
Louisiana/NELAC Certification #: LA080002
Louisiana/NELAC Certification #: 4086
Maine Certification #: PA0091
Maryland Certification #: 308
Massachusetts Certification #: M-PA1457
Michigan/PADEP Certification
Missouri Certification #: 235
Montana Certification #: Cert 0082
Nevada Certification
New Hampshire/NELAC Certification #: 2976
New Jersey/NELAC Certification #: PA 051
New Mexico Certification
New York/NELAC Certification #: 10888
North Carolina Certification #: 42706
Oregon/NELAC Certification #: PA200002
Pennsylvania/NELAC Certification #: 65-00282
Puerto Rico Certification #: PA01457
South Dakota Certification
Tennessee Certification #: TN2867
Texas/NELAC Certification #: T104704188-09 TX
Utah/NELAC Certification #: ANTE
Virgin Island/PADEP Certification
Virginia Certification #: 00112
Washington Certification #: C1941
West Virginia Certification #: 143
Wisconsin/PADEP Certification
Wyoming Certification #: 8TMS-Q

This report shall not be reproduced, except in full,
without the written consent of Pace Analytical Services, Inc..

Pace Analytical Services, Inc.
1638 Roseytown Road - Suites 2,3,4
Greensburg, PA 15601
(724)850-5600

SAMPLE SUMMARY

Project: 10120871
Pace Project No.: 3039229

Lab ID	Sample ID	Matrix	Date Collected	Date Received
3039229001	**10120871-001**	Water	12/21/10 07:25	12/23/10 12:30
3039229002	**10120871-002**	Water	12/21/10 07:25	12/23/10 12:30

This report shall not be reproduced, except in full,
without the written consent of Pace Analytical Services, Inc..

Pace Analytical Services, Inc.
1638 Roseytown Road - Suites 2,3,4
Greensburg, PA 15601
(724)850-5600

SAMPLE ANALYTE COUNT

Project: 10120871
Pace Project No.: 3039229

Lab ID	Sample ID	Method	Analysts	Analytes Reported	Laboratory
3039229001	**10120871-001**	EPA 900.0m	AMK	2	PASI-PA
		EPA 903.1	RMD	1	PASI-PA
		EPA 904.0	AMK	1	PASI-PA
		HSL-300m	MAN	6	PASI-PA
3039229002	**10120871-002**	EPA 900.0m	AMK	2	PASI-PA
		EPA 903.1	RMD	1	PASI-PA
		EPA 904.0	AMK	1	PASI-PA
		HSL-300m	MAN	6	PASI-PA

This report shall not be reproduced, except in full,
without the written consent of Pace Analytical Services, Inc..

Pace Analytical®
www.pacelabs.com

Pace Analytical Services, Inc.
1638 Roseytown Road - Suites 2,3,4
Greensburg, PA 15601
(724)850-5600

PROJECT NARRATIVE

Project: 10120871
Pace Project No.: 3039229

Method: **EPA 900.0m**
Description: 900.0 Gross Alpha/Beta
Client: Teklab, Inc.
Date: January 11, 2011

General Information:
2 samples were analyzed for EPA 900.0m. All samples were received in acceptable condition with any exceptions noted below.

Hold Time:
The samples were analyzed within the method required hold times with any exceptions noted below.

Method Blank:
All analytes were below the report limit in the method blank with any exceptions noted below.

Laboratory Control Spike:
All laboratory control spike compounds were within QC limits with any exceptions noted below.

Matrix Spikes:
All percent recoveries and relative percent differences (RPDs) were within acceptance criteria with any exceptions noted below.

Duplicate Sample:
All duplicate sample results were within method acceptance criteria with any exceptions noted below.

Additional Comments:

This report shall not be reproduced, except in full,
without the written consent of Pace Analytical Services, Inc..

ACCREDITED IN ACCORDANCE WITH nelac

MSD 011578

Pace Analytical Services, Inc.
1638 Roseytown Road - Suites 2,3,4
Greensburg, PA 15601
(724)850-5600

PROJECT NARRATIVE

Project: 10120871
Pace Project No.: 3039229

Method: **EPA 903.1**
Description: 903.1 Radium 226
Client: Teklab, Inc.
Date: January 11, 2011

General Information:
2 samples were analyzed for EPA 903.1. All samples were received in acceptable condition with any exceptions noted below.

Hold Time:
The samples were analyzed within the method required hold times with any exceptions noted below.

Method Blank:
All analytes were below the report limit in the method blank with any exceptions noted below.

Laboratory Control Spike:
All laboratory control spike compounds were within QC limits with any exceptions noted below.

Matrix Spikes:
All percent recoveries and relative percent differences (RPDs) were within acceptance criteria with any exceptions noted below.

Duplicate Sample:
All duplicate sample results were within method acceptance criteria with any exceptions noted below.

Additional Comments:

This report shall not be reproduced, except in full,
without the written consent of Pace Analytical Services, Inc..

Pace Analytical®
www.pacelabs.com

Pace Analytical Services, Inc.
1638 Roseytown Road - Suites 2,3,4
Greensburg, PA 15601
(724)850-5600

PROJECT NARRATIVE

Project: 10120871
Pace Project No.: 3039229

Method: **EPA 904.0**
Description: 904.0 Radium 228
Client: Teklab, Inc.
Date: January 11, 2011

General Information:
2 samples were analyzed for EPA 904.0. All samples were received in acceptable condition with any exceptions noted below.

Hold Time:
The samples were analyzed within the method required hold times with any exceptions noted below.

Method Blank:
All analytes were below the report limit in the method blank with any exceptions noted below.

Laboratory Control Spike:
All laboratory control spike compounds were within QC limits with any exceptions noted below.

Matrix Spikes:
All percent recoveries and relative percent differences (RPDs) were within acceptance criteria with any exceptions noted below.

Duplicate Sample:
All duplicate sample results were within method acceptance criteria with any exceptions noted below.

Additional Comments:

This report shall not be reproduced, except in full,
without the written consent of Pace Analytical Services, Inc..

ACCREDITED IN ACCORDANCE WITH nelac

MSD 011580

Pace Analytical®
www.pacelabs.com

Pace Analytical Services, Inc.
1638 Roseytown Road - Suites 2,3,4
Greensburg, PA 15601
(724)850-5600

PROJECT NARRATIVE

Project: 10120871
Pace Project No.: 3039229

Method: **HSL-300m**
Description: HSL300(AS) Actinides
Client: Teklab, Inc.
Date: January 11, 2011

General Information:
2 samples were analyzed for HSL-300m. All samples were received in acceptable condition with any exceptions noted below.

Hold Time:
The samples were analyzed within the method required hold times with any exceptions noted below.

Method Blank:
All analytes were below the report limit in the method blank with any exceptions noted below.

Laboratory Control Spike:
All laboratory control spike compounds were within QC limits with any exceptions noted below.

Matrix Spikes:
All percent recoveries and relative percent differences (RPDs) were within acceptance criteria with any exceptions noted below.

Duplicate Sample:
All duplicate sample results were within method acceptance criteria with any exceptions noted below.

Additional Comments:

This data package has been reviewed for quality and completeness and is approved for release.

This report shall not be reproduced, except in full,
without the written consent of Pace Analytical Services, Inc..

ACCREDITED IN ACCORDANCE WITH nelac

MSD 011581

Pace Analytical®
www.pacelabs.com

Pace Analytical Services, Inc.
1638 Roseytown Road - Suites 2,3,4
Greensburg, PA 15601
(724)850-5600

ANALYTICAL RESULTS

Project: 10120871
Pace Project No.: 3039229

Sample: 10120871-001 **Lab ID: 3039229001** Collected: 12/21/10 07:25 Received: 12/23/10 12:30 Matrix: Water
PWS: Site ID: Sample Type:

Parameters	Method	Act ± Unc (MDC)	Units	Analyzed	CAS No.	Qual
Gross Alpha	EPA 900.0m	**15.7 ± 3.69 (2.51)**	pCi/L	12/29/10 11:18	12587-46-1	
Gross Beta	EPA 900.0m	**29.5 ± 5.75 (2.03)**	pCi/L	12/29/10 11:18	12587-47-2	
Radium-226	EPA 903.1	**0.902 ± 0.613 (0.698)**	pCi/L	01/10/11 13:13	13982-63-3	
Radium-228	EPA 904.0	**1.08 ± 0.571 (0.987)**	pCi/L	01/06/11 15:15	15262-20-1	
Thorium-228	HSL-300m	**0.332 ± 0.291 (0.439)**	pCi/L	01/07/11 15:33	14274-82-9	
Thorium-230	HSL-300m	**0.651 ± 0.324 (0.356)**	pCi/L	01/07/11 15:33	14269-63-7	
Thorium-232	HSL-300m	**0.325 ± 0.204 (0.199)**	pCi/L	01/07/11 15:33	7440-29-1	
Uranium-234	HSL-300m	**15.662 ± 2.524 (0.595)**	pCi/L	01/09/11 12:04	13966-29-5	
Uranium-235	HSL-300m	**0.944 ± 0.374 (0.091)**	pCi/L	01/09/11 12:04	15117-96-1	
Uranium-238	HSL-300m	**15.838 ± 2.531 (0.240)**	pCi/L	01/09/11 12:04	7440-61-1	

This report shall not be reproduced, except in full,
without the written consent of Pace Analytical Services, Inc..

ACCREDITED IN ACCORDANCE WITH nelac

MSD 011582

Pace Analytical®
www.pacelabs.com

Pace Analytical Services, Inc.
1638 Roseytown Road - Suites 2,3,4
Greensburg, PA 15601
(724)850-5600

ANALYTICAL RESULTS

Project: 10120871
Pace Project No.: 3039229

Sample: 10120871-002 **Lab ID: 3039229002** Collected: 12/21/10 07:25 Received: 12/23/10 12:30 Matrix: Water
PWS: Site ID: Sample Type:

Parameters	Method	Act ± Unc (MDC)	Units	Analyzed	CAS No.	Qual
Gross Alpha	EPA 900.0m	**21.6 ± 4.83 (2.37)**	pCi/L	12/30/11 12:50	12587-46-1	
Gross Beta	EPA 900.0m	**52.6 ± 9.92 (2.06)**	pCi/L	12/30/11 12:50	12587-47-2	
Radium-226	EPA 903.1	**0.830 ± 0.708 (0.997)**	pCi/L	01/10/11 13:13	13982-63-3	
Radium-228	EPA 904.0	**4.19 ± 1.04 (0.942)**	pCi/L	01/06/11 15:15	15262-20-1	
Thorium-228	HSL-300m	**0.321 ± 0.227 (0.288)**	pCi/L	01/07/11 15:33	14274-82-9	
Thorium-230	HSL-300m	**0.446 ± 0.265 (0.315)**	pCi/L	01/07/11 15:33	14269-63-7	
Thorium-232	HSL-300m	**0.183 ± 0.187 (0.281)**	pCi/L	01/07/11 15:33	7440-29-1	
Uranium-234	HSL-300m	**15.050 ± 2.498 (0.524)**	pCi/L	01/09/11 12:04	13966-29-5	
Uranium-235	HSL-300m	**0.863 ± 0.395 (0.289)**	pCi/L	01/09/11 12:04	15117-96-1	
Uranium-238	HSL-300m	**16.161 ± 2.643 (0.279)**	pCi/L	01/09/11 12:04	7440-61-1	

This report shall not be reproduced, except in full,
without the written consent of Pace Analytical Services, Inc..

ACCREDITED IN ACCORDANCE WITH nelac

MSD 011583

Pace Analytical Services, Inc.
1638 Roseytown Road - Suites 2,3,4
Greensburg, PA 15601
(724)850-5600

QUALITY CONTROL DATA

Project: 10120871
Pace Project No.: 3039229

QC Batch: RADC/7100
QC Batch Method: EPA 900.0m
Analysis Method: EPA 900.0m
Analysis Description: 900.0 Gross Alpha/Beta
Associated Lab Samples: 3039229001

METHOD BLANK: 253536
Matrix: Water
Associated Lab Samples: 3039229001

Parameter	Act ± Unc (MDC)	Units	Analyzed	Qualifiers
Gross Alpha	0.993 ± 0.688 (0.981)	pCi/L	12/29/10 11:15	
Gross Beta	0.584 ± 0.810 (1.73)	pCi/L	12/29/10 11:15	

This report shall not be reproduced, except in full,
without the written consent of Pace Analytical Services, Inc..

Pace Analytical®
www.pacelabs.com

Pace Analytical Services, Inc.
1638 Roseytown Road - Suites 2,3,4
Greensburg, PA 15601
(724)850-5600

QUALITY CONTROL DATA

Project: 10120871
Pace Project No.: 3039229

QC Batch: RADC/7110 | Analysis Method: HSL-300m
QC Batch Method: HSL-300m | Analysis Description: HSL300(AS) Actinides
Associated Lab Samples: 3039229001, 3039229002

METHOD BLANK: 253640 | Matrix: Water
Associated Lab Samples: 3039229001, 3039229002

Parameter	Act ± Unc (MDC)	Units	Analyzed	Qualifiers
Thorium-228	0.207 ± 0.144 (0.208)	pCi/L	01/07/11 15:33	
Thorium-230	0.155 ± 0.111 (0.155)	pCi/L	01/07/11 15:33	
Thorium-232	0.072 ± 0.074 (0.111)	pCi/L	01/07/11 15:33	
Uranium-234	0.050 ± 0.106 (0.189)	pCi/L	01/09/11 12:03	
Uranium-235	0.026 ± 0.036 (0.035)	pCi/L	01/09/11 12:03	
Uranium-238	0.010 ± 0.044 (0.093)	pCi/L	01/09/11 12:03	

This report shall not be reproduced, except in full,
without the written consent of Pace Analytical Services, Inc..

ACCREDITED IN ACCORDANCE WITH nelac

MSD 011585

Pace Analytical®
www.pacelabs.com

Pace Analytical Services, Inc.
1638 Roseytown Road - Suites 2,3,4
Greensburg, PA 15601
(724)850-5600

QUALITY CONTROL DATA

Project: 10120871
Pace Project No.: 3039229

QC Batch: RADC/7115 | Analysis Method: EPA 904.0
QC Batch Method: EPA 904.0 | Analysis Description: 904.0 Radium 228
Associated Lab Samples: 3039229001, 3039229002

METHOD BLANK: 253830 | Matrix: Water
Associated Lab Samples: 3039229001, 3039229002

Parameter	Act ± Unc (MDC)	Units	Analyzed	Qualifiers
Radium-228	0.645 ± 0.496 (0.977)	pCi/L	01/06/11 15:17	

This report shall not be reproduced, except in full,
without the written consent of Pace Analytical Services, Inc..

ACCREDITED IN ACCORDANCE WITH nelac

MSD 011586

Pace Analytical Services, Inc.
1638 Roseytown Road - Suites 2,3,4
Greensburg, PA 15601
(724)850-5600

QUALITY CONTROL DATA

Project: 10120871
Pace Project No.: 3039229

QC Batch: RADC/7118 | Analysis Method: EPA 900.0m
QC Batch Method: EPA 900.0m | Analysis Description: 900.0 Gross Alpha/Beta
Associated Lab Samples: 3039229002

METHOD BLANK: 253874 | Matrix: Water
Associated Lab Samples: 3039229002

Parameter	Act ± Unc (MDC)	Units	Analyzed	Qualifiers
Gross Alpha	-0.283 ± 0.578 (1.72)	pCi/L	12/30/10 12:50	
Gross Beta	-0.897 ± 0.650 (1.79)	pCi/L	12/30/10 12:50	

This report shall not be reproduced, except in full,
without the written consent of Pace Analytical Services, Inc..

Pace Analytical Services, Inc.
1638 Roseytown Road - Suites 2,3,4
Greensburg, PA 15601
(724)850-5600

QUALITY CONTROL DATA

Project: 10120871
Pace Project No.: 3039229

QC Batch: RADC/7126 | Analysis Method: EPA 903.1
QC Batch Method: EPA 903.1 | Analysis Description: 903.1 Radium-226
Associated Lab Samples: 3039229001, 3039229002

METHOD BLANK: 254376 | Matrix: Water
Associated Lab Samples: 3039229001, 3039229002

Parameter	Act ± Unc (MDC)	Units	Analyzed	Qualifiers
Radium-226	-0.059 ± 0.309 (0.714)	pCi/L	01/10/11 12:51	

This report shall not be reproduced, except in full,
without the written consent of Pace Analytical Services, Inc..

Pace Analytical®
www.pacelabs.com

Pace Analytical Services, Inc.
1638 Roseytown Road - Suites 2,3,4
Greensburg, PA 15601
(724)850-5600

QUALIFIERS

Project: 10120871
Pace Project No.: 3039229

DEFINITIONS

DF - Dilution Factor, if reported, represents the factor applied to the reported data due to changes in sample preparation, dilution of the sample aliquot, or moisture content.

ND - Not Detected at or above adjusted reporting limit.

J - Estimated concentration above the adjusted method detection limit and below the adjusted reporting limit.

MDL - Adjusted Method Detection Limit.

S - Surrogate

1,2-Diphenylhydrazine (8270 listed analyte) decomposes to Azobenzene.

Consistent with EPA guidelines, unrounded data are displayed and have been used to calculate % recovery and RPD values.

LCS(D) - Laboratory Control Sample (Duplicate)

MS(D) - Matrix Spike (Duplicate)

DUP - Sample Duplicate

RPD - Relative Percent Difference

NC - Not Calculable.

SG - Silica Gel - Clean-Up

U - Indicates the compound was analyzed for, but not detected.

N-Nitrosodiphenylamine decomposes and cannot be separated from Diphenylamine using Method 8270. The result reported for each analyte is a combined concentration.

Act - Activity

Unc - Uncertainty

(MDC) - Minimum Detectable Concentration

Pace Analytical is NELAP accredited. Contact your Pace PM for the current list of accredited analytes.

LABORATORIES

PASI-PA Pace Analytical Services - Greensburg

This report shall not be reproduced, except in full,
without the written consent of Pace Analytical Services, Inc..

ACCREDITED IN ACCORDANCE WITH nelac

MSD 011589

CHAIN OF CUSTODY

pg. 1 of 1 Work Order # 1012087

TEKLAB, INC. 5445 Horseshoe Lake Road ~ Collinsville, IL 62234 ~ Phone: (618) 344-1004 ~ Fax: (618) 344-1005

Client: Covidien / Mallinckrodt
Address: 3600 N 2nd Street
City / State / Zip: St Louis, MO 63147
Contact: Lisa Meyer Phone: 314-654-3374
E-Mail: Fax: 314-654-1251

Samples on: ☒ Ice ☐ Blue Ice ~~☐ No Ice~~ 4.8 °C
Preserved in: ☐ Lab ☐ Field FOR LAB USE ONLY
Lab Notes:
Comments:

Teklab, Inc. Courier Pick Up

- Are these samples known to be involved in litigation? If yes, a surcharge will apply. ☐ Yes ☒ No
- Are these samples known to be hazardous? ☐ Yes ☒ No
- Are there any required reporting limits to be met on the requested analysis? If yes, please provide limits in comment section. ☐ Yes ☒ No

Project Name / Number: Roll-off Decant Water
Sample Collector's Name: Timothy Moch
Results Requested: ☒ Standard ☐ 1-2 Day (100% Surcharge) ☐ Other_____ ☐ 3 Day (50% Surcharge)
Billing Instructions:

Lab Use Only	Sample Identification	Date/Time Sampled	# and Type of Containers: UNPRES	HNO3	NaOH	H2SO4	HCL	MeOH	NaHSO4	Other	MATRIX: Water	Drinking Water	Soil	Sludge	Sp. Waste	INDICATE ANALYSIS REQUESTED: pH	TSS	Gross Alpha	Gross Beta	Uranium 234, 235, 238	Radium 226 + 228	Thorium 228 + 230
1012087-001	3167SD-1	12/21/10 0725 ~~3:16~~	5								X					X	X	X	X	X	X	X
002	3167SD-2	12/21/10 0725 ~~3:16~~	5								X					X	X	X	X	X	X	X

Relinquished By	Date / Time	Received By	Date / Time
Timothy Moch	12/21/10 0844		12/22/10 1008
	12/22/10 1100	Marvin L Daling II	12/22/10 1100

The individual signing this agreement on behalf of client acknowledges that he/she has read and understands the terms and conditions of this agreement, on the reverse side, and that he/she has the authority to sign on behalf of client.

WHITE & YELLOW – LAB PINK – SAMPLER'S COPY

MSD 011590

Mallinckrodt Inc.
2112059600-00
SP 848

COVIDIEN

JANUARY 14, 2011

Mr. Steve Grace
Metropolitan St. Louis Sewer District
Department of Environmental Compliance
10 East Grand Avenue
St. Louis, MO 63147-2913

RE: Special Discharge Follow-up - PERMIT NO. 2112059600-3

Dear Mr. Grace:

On December 2, 2010 an approval from MSD was received to discharge an estimated 800 gallons of wastewater to MSD for treatment. The wastewater was a sodium aluminate solution from an aluminum stearate campaign. Due to processing issues the amount of wastewater generated was much less than what was originally anticipated. Therefore we no longer have the need to discharge any material under this special discharge permit and request the permit to be closed.

If you have any questions or need additional information, please call me at 314.654.3374.

Sincerely,

Lisa Meyer
Senior HSE Engineer

COVIDIEN/MALLINCKRODT
3600 NORTH SECOND STREET
ST. LOUIS, MO 63147

TELEPHONE: 314-654-2000
FAX: 314-654-1251

IU - Mallinckrodt Inc. (21120596-00)
SP848

Steve Grace

From: Steve Grace
Sent: Tuesday, January 04, 2011 2:08 PM
To: 'Meyer, Lisa A'
Subject: RE: Request for Extension to Special Discharge Permit - Sodium Aluminate from Building X

Hello Lisa,

Based on the information provided below, your request for a 30-day extension is granted. The wastewater in question is approved for onsite discharge and will expire on 2/3/11. Please contact me with any questions or if you require additional information.

Thank you,
Steve Grace

From: Meyer, Lisa A [mailto:Lisa.Meyer@Covidien.com]
Sent: Tuesday, January 04, 2011 1:53 PM
To: Steve Grace
Subject: Request for Extension to Special Discharge Permit - Sodium Aluminate from Building X
Importance: High

Steve,
I would like to request a thirty (30) day extension for the Special Discharge permit you approved per your letter dated December 2, 2010 for approximately 800 gallons of a sodium aluminate solution generated from an aluminum stearate campaign in Building X. Thank you.

Lisa

Lisa Meyer
Senior HSE Engineer
Covidien
Mallinckrodt
3600 North Second Street
St. Louis, MO 63147
USA
314.654.3374 office
314.654.1251 fax

Together we can make a difference. Consider the environment before choosing to print this message.

COVIDIEN

December 22, 2010

Mr. Doug Mendoza
Manager, Environmental Compliance
St. Louis Metropolitan Sewer District
10 East Grand Ave
St. Louis, MO 63147

RE: Follow-up to the Unplanned Caustic Solution Release at the St. Louis Plant
PERMIT NO. 2112059600-3

Dear Mr. Mendoza:

This letter is a follow-up to an unplanned release of an estimated 5 gallons of a sodium hydroxide solution from Mallinckrodt St. Louis Plant as reported via phone call to the MSD Emergency line on December 18, 2010.

At approximately 11:40 am on December 18, 2010, there was a release of an estimated 15 gallons of 4% sodium hydroxide/water solution due to a hose rupture during equipment pre-commissioning activities. The discharge of the sodium hydroxide solution was discovered immediately and the pump was turned off to stop transfer by people conducting the work.

Since this was a one-time activity, the only corrective action associated with this incident was to replace the ruptured hose and conduct a close inspection of the replacement hose prior to starting up the transfer.

If you have any questions or need additional information, please call me at 314-654-1969.

Sincerely,

Julie Summers

Julie Summers
Environmental Manager

RECEIVED
DEC 23 2010
DIVISION OF
ENVIRONMENTAL COMPLIANCE

COVIDIEN/MALLINCKRODT
3600 NORTH SECOND STREET
ST. LOUIS, MO 63147

TELEPHONE: 314-654-2000
FAX: 314-654-1251

Von
SR

COVIDIEN

December 29, 2010

Mr. Doug Mendoza
Manager, Environmental Compliance
St. Louis Metropolitan Sewer District
10 East Grand Ave
St. Louis, MO 63147

RE: Follow-up to the pH Exceedance at the St. Louis Plant
PERMIT NO. 2112059600-3

Dear Mr. Mendoza:

This letter is a follow-up to the pH Exceedance that occurred on December 22, 2010 at the Mallinckrodt St. Louis Plant as reported to you via voicemail by Julie Summers on December 23, 2010.

Between approximately 11:40 am and 1:55 pm on December 22, 2010, the pH at the main outfall SP010 at the St. Louis Plant exceeded the upper permit limit of 11.5. During this period the portion of the plant wastewater that contributed to the high pH was diverted to the onsite spill tanks. However, due to the low flow rate from the rest of the plant, there was not sufficient flow from the remainder of the plant to bring the outfall pH back into range to prevent the excursion. The wastewater flow from the plant was about 20% of normal volume because most of plant operations were down for preventative maintenance and in preparation for the holiday.

The source of the high pH wastewater has been identified as a leaking block valve on a 20% NaOH line to the primary neutralization tank in Building 505. The Building 505 neutralization system discharges into the Building 505 sump and then to tank T-450 in Building 504 and then to the plant's main outfall SP010.

Maintenance is currently working on this system in Building 505 to repair the leaking valve.

If you have any questions or need additional information, please call me at 314-654-3374.

RECEIVED
DEC 30 2010
DIVISION OF
ENVIRONMENTAL COMPLIANCE

Sincerely,
Lisa Meyer
Lisa Meyer
Senior HSE Engineer

COVIDIEN/MALLINCKRODT
3600 NORTH SECOND STREET
ST. LOUIS, MO 63147

TELEPHONE: 314-654-2000
FAX: 314-654-1251

Metropolitan St Louis Sewer District
2350 Market Street
St Louis, MO 63103-2555
(314)768-6200

Service Request Detail

MALLINCKRODT
2112059600
JAG

Report Date 12/20/2010 07:05 AM **Submitted By**

Service # 201034856
Problem OTH OTHER/MISCELLANEOUS
Address 3600 N 2ND ST
ST. LOUIS MO 63147-

Call Date 12/18/2010 15:42
Taken By 06092 ROSSI, TERRY L.
Source
☐ **Customer Contact Requested**

Priority D RESPONSE TIME LESS THAN 4 D
Responsibility
Project
Budget #
Duration of Call 00:00
# of Calls 1

Service Request Progress

Schedule	(resolved)
Inspect	Not inspected with no due date. Assigned to 07213 VANADA JOHNSON.
Resolve	Resolved at 12/20/2010 07:02 AM with code IFNP INSPECTION FOUND NO PROBLEM. No work orders are required.

Location MALLINCKRODT
Area 1 CITY OF ST.LOUIS (CLIFTON)
District
Parcel
Template Type
Asset
Sub-Area 1000 NORTH CITY
Map #
A/P #

Primary Caller

Name GLOVER
First,MI TRACY,
Address
Title
City ST. LOUIS
State/Province MO
Country
☐ **Foreign**
ZIP/PC
Reference # SL
E-Mail
Day Phone (636)485-1029 x
Evening Phone
Call Date 12/18/2010 15:42
Taken By 06092
Comments
TRACY GLOVER SAID THEY DISCHARGED 5 GALLONS OF {7 PH OF COSTIC} INTO SEWER

Call List

There are no additional callers for this service number

Comments
DEC V.J. NOTIFIED DOUG MENDOZA (Regulatory)

Log

Log Type	Description	Log Started	Log Ended	Entered By
Comments				

There are no log entries for this service number

Comments

Inspected				Resolution			
By		Date	Time	Code		Date	Time

Metropolitan St Louis Sewer District
2350 Market Street
St Louis, MO 63103-2555
(314)768-6200

Service Request Detail

Report Date 12/20/2010 07:05 AM **Submitted By**

Work Orders Needed

Asset Type	Unit ID/Address	Problem	Activity	Priority

Comments

Comments

Linked requests

Scheduled Resources

Employee ID	Scheduled Start	Scheduled End	Work Description
No resources scheduled.			

Equipment ID	Scheduled Start	Scheduled End	Work Description
No resources scheduled.			

Vehicle ID	Scheduled Start	Scheduled End	Work Description
No resources scheduled.			

Metropolitan St. Louis Sewer District

Division of Environmental Compliance
10 East Grand Avenue
St. Louis, MO 63147-2913
Phone: 314.768.6200 www.stlmsd.com

December 16, 2010

Randy Thomas
MALLINCKRODT
2703 Wagner Place
Maryland Heights, MO 63043

Re: Wastewater User Charge Billing for Special Discharge

Dear Mr. Thomas:

This is to advise you of the wastewater user charges applicable to an on-site special discharge approved in our letter to you dated November 8, 2010. You were advised of the extra-strength surcharges as part of the original approval letter. That charge was determined using the propylene glycol concentration in your application for special discharge. The discharge date and quantity are from information submitted by you in correspondence dated December 16, 2010.

Our Finance Department will bill you by invoice for the charges described below. These charges are based on the rates in MSD Wastewater User Charge Ordinance 13021. For your convenience, using the volume and strength of the waste discharged, the ordinance rates have been converted to a per-gallon basis.

PARTY TO BILL: Addressee

BILLING IS FOR: On-Site Special Discharge

DISCHARGE PERIOD: November 16-19, 2010

SOURCE OF WASTE: Propylene glycol solution (7.25%) from Building 650 at the Mallinckrodt facility located at 2703 Wagner Place, Maryland Heights, Missouri.

Discharge Period	Billing Item	Quantity	Units	Rate	Charge
11/16-19/10	Extra-Strength Surcharge	6,282	Gal	$0.09	$565.38
Total:	------	**6,282**	Gal	-----	**$565.38**

Please do not pay until you receive our invoice. If you have any questions, please contact me at (314) 436-8755.

Sincerely,
METROPOLITAN ST. LOUIS SEWER DISTRICT

Steven M. Grace

Steve Grace
Environmental Assistant Engineer

bv

pc Chris Verplancke - Finance Dept.
Doug Mendoza
Brian Gibson

File: IU, MALLINCKRODT INC [2112059600], 3600 North Second Street, St. Louis, MO

Covidien – Maryland Heights, MO.

December 16, 2010

TO: Steve Grace

From: Randy Thomas

RE: Special Discharge Approval: Report of discharge volume

Dear Steve,

Pumping of a 7.25% glycol solution to the sanitary sewer per your approval has been completed. The table below shows the dates the discharge took place as well as daily and total volumes. Volumes were calculated based on total pump time at a rate of 4.5 gallons/minute discharge. The total glycol solution discharged by Mallinckrodt, Maryland Heights was 6282 gallons.

Discharge of glycol/water mixture from Building 650 to MSD Sanitary Sewer

DATE	Pump Start Time	Pump End Time	Total pump time (min)	Gallons discharged
11/16/10	11:25	15:25	240	1080
11/17/10	7:10	15:25	495	2227.5
11/18/10	7:10	15:25	495	2227.5
11/19/10	8:10	9:40	150	675
11/19/10	Vacuumed 72 gallons out to remove remaining liquid			72
			Total	**6282**

Please let me know if you have any questions or need additional information. Thanks for your assistance with this project.

Sincerely,

Randy Thomas

Mitzi Pennington
16 Dec 10

Randy Thomas
Randy.thomas@covidien.com
314-654-76561 (office)
314-393-0429 (cell)

Metropolitan Saint Louis Sewer District
2350 Market Street
Saint Louis, Missouri 63103-2555

MALLINCKRODT INC.
3600 N. 2nd St.
St. Louis, MO 63147

Attn: Lisa Meyer
HS&E Engineer

INDUSTRIAL WASTEWATER DISCHARGE PERMIT NUMBER 2112059600.

ANNUAL PERMIT FEE NOTICE

For permits in effect as of 10/01/2010.

Fee will be included in a **separate bill** from the Metropolitan St. Louis Sewer District.

Explanation of Charges

Fee for Pretreatment Program Discharge Permit covering the period October 1, 2010 through September 30, 2011 issued in accordance with the Metropolitan St. Louis District Ordinance #12413 for the location at **3600 N. 2nd St.**

Base charge @ $150.00 per permit			$150.00
Volume charge @ $0.72 per average daily Ccf	1,454.34	Ccf(s)	$1,047.13
Sample Point Charge @ $100.00 per sample point	20	Point(s)	$2,000.00
		Total Fee Due:	$3,197.13

For inquiries about the Annual Permit Fee, please call 314-436-8756. For inquiries about payment of the fee, which will appear on your upcoming monthly bill, please call 1-866-281-5737.

THIS IS NOT A BILL

DO NOT PAY NOW

FEE WILL BE INCLUDED IN A SEPARATE BILL

Metropolitan St. Louis Sewer District

Division of Environmental Compliance
10 East Grand Avenue
St. Louis, MO 63147-2913
Phone: 314.768.6200 www.stlmsd.com

December 2, 2010

Lisa Meyer
MALLINCKRODT
3600 North Second St.
St. Louis, MO 63147

Dear Ms. Meyer:

We have reviewed your application dated December 1, 2010 requesting approval to discharge 800 gallons of wastewater to the Metropolitan St. Louis Sewer District for treatment. This wastewater is sodium aluminate solution generated from the aluminum stearate campaign in Building X of the Mallinckrodt facility located at 3600 North Second Street, St. Louis, Missouri. Information provided previously indicated that stearate is not a pharmaceutical but is used as an additive for food products, and that this waste stream will be discharged through sampling point 010.

Based on the information you provided, this wastewater meets MSD Ordinance 12559 standards and is approved for discharge into a sanitary sewer on site. This approval is valid for 30 days from the date of this letter.

You must be certain the waste is discharged into a sanitary or combined sewer inlet only. This letter does not authorize any discharge to a separate storm sewer, or to any watercourse, as any such discharge would be in violation of state and federal laws. **Please notify me at the number below when the discharge is to commence.**

This discharge has been approved based upon the information and sample analysis you provided, and is subject to the conditions stated above. This approval may be revoked by the District at any time if any of the information is found to be incorrect, or if the conditions of this approval are violated. Also, if the discharge causes any operational or maintenance problem within the District's collection or treatment system, or results in violations of any conditions of the District's NPDES permit, Mallinckrodt will be considered responsible for damages.

If you have any questions, please call me at (314) 436-8755.

Sincerely,
METROPOLITAN ST. LOUIS SEWER DISTRICT

Steven M. Grace

Steve Grace
Environmental Assistant Engineer

bv

pc: Brian Gibson
Doug Mendoza

File: IU, MALLINCKRODT INC [2112059600], 3600 N. 2nd St., St. Louis, Missouri

C1A

SD EVALUATION CHECKLIST - ON SITE

APPLICATION INFORMATION

Source Name: Mallinckrodt Inc.

Premise Address: 3600 S. 2nd St.

Send approval letter to applicant

Evaluated by: SMG

Date: 12/2/10

Application Dated: 12/1/10 Received: 12/1/10 All Requested Info. Received: 12/2/10

SOURCE FILING/DESCRIPTION

1 - Source in PIMS? (Y) / N
2 - If No, on IU Cross-Ref list? * Y / N
3 - If No, MSD Account # from E-CIS? Y / N
4 - If none, on "Source" list (pre-IMS)? ** Y / N
5 - If No, assigned SOUR# from PIMS.

* o:\costrecovery\cross reference xls file

** o:\costrecovery\sourlist xls file

SOURCE TYPE (circle):
(IU) / Dead IU / SD

INDUSTRY ID: 21120596-00

Sample Point: No. Assigned: 848 Description: Sodium aluminate soln. generated from the aluminum stearate campaign in Bldg. X

Normal WW flow from premise? (N/A) _____ ccf/month, _____ GPD, _____ GPH.

REGULATORY STATUS

Is waste a Hazardous Waste? (N) / Y

Categorical standards apply? (N) / Y

Contain PCB/ asbestos/ radioactive/ dioxin/ used oil? (N) / Y

Regulatory Agency Oversight? (N) / Y

DISCHARGE CONSIDERATIONS At MSD's connection:

Ordinance Limits (12559, p32) exceeded? (N) / Y

Ordinance other limits exceeded (dye, flash pt <140F, temp >140F, obstruction, nuisance foaming/odor, corrosion causing): (N) / Y

Water Quality Standard exceeded? (N) / Y

Fumes in sewer exceed PEL/TLV limits? (N) / Y

Vapors in sewer exceed 10% of LEL? (N) / Y

RECOMMENDATION: (APPROVE) / DENY (cc WWTP Mgr for timed discharge)

APPROVAL CONDITIONS:

Timed Discharge (COD/BOD/WQ/foam): (N) / Y Limit = _____ gal/hour

Require Treatment before Discharge? (N) / Y

Laboratory analysis fee due? (N) / Y $_____

SMR required? (N) / Y Frequency/analysis: _____

SMR log: (N/A) / Remediation.xls / Nonremediation.xls

Volume Billing applies (water unmetered or credited)? (N) / Y

Bill High Strength? (N) / Y Yes, If use >60,000 gal/month water ___and; > norm WW strgth

Surcharge calculation attached: N/A / (N) / Y

Expiration log updated: (N/A) / N / Y

O:\CostRecovery\Special Discharge\C1a.Checklist.doc

COVIDIEN

Facsimile Communication

To: Mr. Steve Grace

Company: MSD Environmental Compliance

Fax Number: 314.436.8766

Date: December 1, 2010

Number of Pages *(including cover sheet)*: 9

Health, Safety, Environmental

Lisa Meyer
Senior HSE Engineer

Covidien/Mallinckrodt
3600 N. Second St.
St. Louis, Missouri 63147

Telephone 314-654-3374
Facsimile 314-654-1251

- ☐ For your information
- X Please respond
- ☐ Urgent
- ☐ Confidential

Comments:

Dear Mr. Grace,

Attached please find an application for the Special Discharge of a sodium aluminate and water solution from Building X. If you have any questions or need additional information, please contact me.

Thank you,

Lisa Meyer

Metropolitan St. Louis Sewer District

Phone No. (314) 436-8710
Division of Environmental Compliance, 10 East Grand Avenue, St. Louis, Missouri 63147 Fax No. (314) 436-8766

APPLICATION FOR SPECIAL DISCHARGE APPROVAL

I. WASTEWATER SOURCE IDENTIFICATION:

Site Name: Mallinckrodt
Premise Address: 3600 North 2nd St.
City: St. Louis State: MO Zip: 63147
Owner: Mallinckrodt
Contact Person: Lisa Meyer
Title: Senior HSE Engineer
Phone: 314.654.3374 Fax: 314.654.1251

II. APPLICANT (mailing information):

Applicant Name: Lisa Meyer
Title: Senior HSE Engineer
Company Name: Mallinckrodt
Mailing Address: 3600 North 2nd St.
City: St. Louis State: MO Zip: 63147
Phone: 314.654.3374 Fax: 314.654.1251

III. A. MATERIAL TO BE DISCHARGED (check all applicable boxes):

1. Wastewater description/location: Sodium Aluminate Solution from Building X!
2. Process/activity generating wastewater: Sodium aluminate solution generated from the aluminum stearate campaign in Building X.
3. Physical and chemical composition: List all constituents, and known or potentially present regulated contaminants below.
   ☐ See separate listing enclosed, and/or ☐ See analytical results enclosed, and/or ☑ Material Safety Data Sheet enclosed.

DESCRIPTION	RANGE	UNIT
Sodium Aluminate	20	%
Sulfuric Acid	15	%
Water	75	%

DESCRIPTION *(continued)*	RANGE	UNIT

4. Is this wastewater from a process subject to EPA's categorical standards in 40 CFR Subchapter N? ☐ Yes ☑ No
   a. If yes, the applicable standards are in: 40 CFR Part _____, Subpart _____ ☐ Existing source ☐ New source
5. Does this wastewater contain polychlorinated biphenyls, asbestos or radioactive material? ☐ Yes ☑ No
   a. If yes, describe: _____
6. Representative sample: ☐ Laboratory results attached, and/or ☐ Sample provided (1/2 gallon minimum, clear container)
   a. Sample collection point/location: _____ Collection method: _____
   b. Sampler's name/Co.: _____ Sample date/time: _____
   c. Attach chain of custody as available
7. Discharge will occur over the following time period: ☑ < 30 days ☐ ≥ Two years ☐ Other: _____
   a. Expected total volume of wastewater to be discharged over the time period above: 800 Gallons
   b. Proposed discharge volume: 800 Gallons, at a frequency of: ☑ One time ☐ Daily ☐ Weekly ☐ Monthly ☐ Once/three months ☐ Once/six months ☐ Other: _____
8. Pretreatment of wastewater prior to discharge: ☐ None ☑ Yes, describe: pH adjust at main outfall SP010
   a. If yes, attach site plan, pretreatment system schematic, and design specifications.
9. Wastewater from a remediation project under: ☐ Superfund/CERCLA ☐ RCRA ☐ Voluntary program ☐ UST ☑ Not applicable
   a. If from a remediation project, briefly describe the past and present utilization of the property: _____

III.B. MATERIAL FROM UNDERGROUND STORAGE TANK SOURCE

☑ **Not applicable (go to Section IV)**

Please answer the following questions if you are requesting to discharge wastewater associated with an underground storage tank system.

1. a. Wastewater from: ☐ Inside UST(s) ☐ UST system pit ☐ Excavation outside UST system pit ☐ Monitoring well ☐ Groundwater remediation system

   b. UST project involves wastewater from: ☐ UST(s) closed in place ☐ UST(s) removed ☐ Remediation ☐ Upgrade ☐ Maintenance activities ☐ Well monitoring ☐ Other, explain: _____

   c. If wastewater is from a closure project, how long has UST(s) been out of service: _____ years

2. a. State assigned UST site identification number: _____ ☐ Not applicable

   b. Number of USTs affected: _____ ☐ Unknown

   c. For the UST(s) involved, their state identification number(s): _____ ☐ Not applicable

   d. Service Station Identification Number, as applicable: _____

3. Tank contents/former contents: ☐ Gasoline ☐ #2 diesel ☐ Used oil ☐ Unknown ☐ Other: _____

IV. DISCHARGE LOCATION

1. ☑ On-site. Describe proposed point of entry to sewer and the discharge rate (must be a sanitary or combined sewer): _____
   plant sewer to main outfall SP010 Note: Range of discharge must not surcharge sewer line.

2. ☐ Haul to MSD Bissell Point Hauled Waste Receiving Station at 10 E. Grand, St. Louis, MO.

   a. Transporters Name: _____ and MSD Hauler ID Number: _____

   b. Hazardous Waste Certification:

   For wastewater which is hauled to MSD's Bissell Point Hauled Waste Receiving Station, I hereby certify that to the best of my knowledge and belief, the above hauled waste is not classified as a RCRA "hazardous waste" as defined by the MDNR in 10 CSR 25 or USEPA in 40 CFR Part 261.

   Applicant Name (print): _____

   Signature: _____ **Date:** _____

ADDITIONAL INFORMATION:

_____

V. APPLICANT SIGNATURE AND CERTIFICATION

This application must be signed by the applicant: either the source contact, or a contractor or agent directly responsible for site activities.

I hereby certify that I am directly responsible for activities at the site regarding the wastewater to be discharged, and to the best of my knowledge and belief, based on appropriate inquiry, the information in this application is true, complete, and accurate. The samples or analyses submitted are representative of the materials to be discharged. If granted approval to discharge, I agree to abide by the MSD Ordinances, and all applicable federal, state and local regulations. I agree to pay the costs of any pre-approval analyses performed by MSD and to pay any applicable disposal charges for the volume and strength of the wastes discharged.

Applicant Name (print): Lisa Meyer

Signature: L Meyer **Date:** 12/1/10

FOR MSD USE ONLY:

File Name: _____ ID No. _____ Sample Point No. _____

SIGMA-ALDRICH

sigma-aldrich.com

Material Safety Data Sheet

Version 4.0
Revision Date 03/13/2010
Print Date 03/18/2010

1. PRODUCT AND COMPANY IDENTIFICATION

Product name	:	Sodium aluminate
Product Number	:	13404
Brand	:	Sigma-Aldrich
Company	:	Sigma-Aldrich 3050 Spruce Street SAINT LOUIS MO 63103 USA
Telephone	:	+18003255832
Fax	:	+18003255052
Emergency Phone #	:	(314) 776-6555

2. HAZARDS IDENTIFICATION

Emergency Overview

OSHA Hazards
Corrosive

GHS Label elements, including precautionary statements

Pictogram

Signal word: Danger

Hazard statement(s)
H314 Causes severe skin burns and eye damage.

Precautionary statement(s)
P280 Wear protective gloves/protective clothing/eye protection/face protection.
P305 + P351 + P338 IF IN EYES: Rinse cautiously with water for several minutes. Remove contact lenses, if present and easy to do. Continue rinsing.
P310 Immediately call a POISON CENTER or doctor/physician.

HMIS Classification
Health hazard: 3
Flammability: 0
Physical hazards: 0

NFPA Rating
Health hazard: 3
Fire: 0
Reactivity Hazard: 0

Potential Health Effects

Inhalation May be harmful if inhaled. Material is extremely destructive to the tissue of the mucous membranes and upper respiratory tract.
Skin May be harmful if absorbed through skin. Causes skin burns.
Eyes Causes eye burns.
Ingestion May be harmful if swallowed. Causes burns.

3. COMPOSITION/INFORMATION ON INGREDIENTS

Formula : NaAlO2

Molecular Weight : 118 g/mol

CAS-No.	EC-No.	Index-No.	Concentration
Aluminum sodium oxide			
11138-49-1	234-391-6	-	-

4. FIRST AID MEASURES

General advice
Consult a physician. Show this safety data sheet to the doctor in attendance.Move out of dangerous area.

If inhaled
If breathed in, move person into fresh air. If not breathing give artificial respiration Consult a physician.

In case of skin contact
Take off contaminated clothing and shoes immediately. Wash off with soap and plenty of water. Consult a physician.

In case of eye contact
Continue rinsing eyes during transport to hospital.Rinse thoroughly with plenty of water for at least 15 minutes and consult a physician.

If swallowed
Do NOT induce vomiting. Never give anything by mouth to an unconscious person. Rinse mouth with water. Consult a physician.

5. FIRE-FIGHTING MEASURES

Suitable extinguishing media
Use water spray, alcohol-resistant foam, dry chemical or carbon dioxide.

Special protective equipment for fire-fighters
Wear self contained breathing apparatus for fire fighting if necessary.

6. ACCIDENTAL RELEASE MEASURES

Personal precautions
Use personal protective equipment. Avoid dust formation. Avoid breathing dust. Ensure adequate ventilation. Evacuate personnel to safe areas.

Environmental precautions
Do not let product enter drains.

Methods and materials for containment and cleaning up
Pick up and arrange disposal without creating dust. Keep in suitable, closed containers for disposal.

7. HANDLING AND STORAGE

Precautions for safe handling
Avoid formation of dust and aerosols.
Provide appropriate exhaust ventilation at places where dust is formed. Normal measures for preventive fire protection.

Conditions for safe storage
Keep container tightly closed in a dry and well-ventilated place.

Keep in a dry place.

8. EXPOSURE CONTROLS/PERSONAL PROTECTION

Contains no substances with occupational exposure limit values.

Personal protective equipment

Respiratory protection
Where risk assessment shows air-purifying respirators are appropriate use a full-face particle respirator type N100 (US) or type P3 (EN 143) respirator cartridges as a backup to engineering controls. If the respirator is the sole means of protection, use a full-face supplied air respirator. Use respirators and components tested and approved under appropriate government standards such as NIOSH (US) or CEN (EU).

Hand protection
Handle with gloves.

Eye protection
Face shield and safety glasses

Skin and body protection
Choose body protection according to the amount and concentration of the dangerous substance at the work place.

Hygiene measures
Handle in accordance with good industrial hygiene and safety practice. Wash hands before breaks and at the end of workday.

9. PHYSICAL AND CHEMICAL PROPERTIES

Appearance

Form	powder

Safety data

pH	no data available
Melting point	no data available
Boiling point	no data available
Flash point	not applicable
Ignition temperature	no data available
Lower explosion limit	no data available
Upper explosion limit	no data available
Water solubility	no data available

10. STABILITY AND REACTIVITY

Chemical stability
Stable under recommended storage conditions.

Conditions to avoid
no data available

Materials to avoid
Strong oxidizing agents

Hazardous decomposition products
Hazardous decomposition products formed under fire conditions. - Aluminum oxide

11. TOXICOLOGICAL INFORMATION

Acute toxicity
no data available

Skin corrosion/irritation
no data available

Serious eye damage/eye irritation
no data available

Respiratory or skin sensitization
no data available

Germ cell mutagenicity
no data available

Carcinogenicity

IARC:	No component of this product present at levels greater than or equal to 0.1% is identified as probable, possible or confirmed human carcinogen by IARC.
ACGIH:	No component of this product present at levels greater than or equal to 0.1% is identified as a carcinogen or potential carcinogen by ACGIH.
NTP:	No component of this product present at levels greater than or equal to 0.1% is identified as a known or anticipated carcinogen by NTP.
OSHA:	No component of this product present at levels greater than or equal to 0.1% is identified as a carcinogen or potential carcinogen by OSHA.

Reproductive toxicity
no data available

Specific target organ toxicity - single exposure (GHS)
no data available

Specific target organ toxicity - repeated exposure (GHS)
no data available

Aspiration hazard
no data available

Potential health effects

Inhalation	May be harmful if inhaled. Material is extremely destructive to the tissue of the mucous membranes and upper respiratory tract.
Ingestion	May be harmful if swallowed. Causes burns.
Skin	May be harmful if absorbed through skin. Causes skin burns.
Eyes	Causes eye burns.

Signs and Symptoms of Exposure
Material is extremely destructive to tissue of the mucous membranes and upper respiratory tract, eyes, and skin., spasm, inflammation and edema of the larynx, spasm, inflammation and edema of the bronchi, pneumonitis, pulmonary edema, burning sensation, Cough, wheezing, laryngitis, Shortness of breath, Headache, Nausea

Additional information
RTECS: BD1600000

12. ECOLOGICAL INFORMATION

Toxicity

no data available

Persistence and degradability
no data available

Bioaccumulative potential
no data available

Mobility in soil
no data available

PBT and vPvB assessment
no data available

Other adverse effects

no data available

13. DISPOSAL CONSIDERATIONS

Product
Observe all federal, state, and local environmental regulations. Contact a licensed professional waste disposal service to dispose of this material. Dissolve or mix the material with a combustible solvent and burn in a chemical incinerator equipped with an afterburner and scrubber.

Contaminated packaging
Dispose of as unused product.

14. TRANSPORT INFORMATION

DOT (US)
UN-Number: 2812 Class: 8 Packing group: III
Proper shipping name: Sodium aluminate, solid (Aluminum sodium oxide)
Marine pollutant: No
Poison Inhalation Hazard: No

IMDG
UN-Number: 2812 Class: 8
Proper shipping name: SODIUM ALUMINATE, SOLID (Aluminum sodium oxide)
Marine pollutant: No

IATA
UN-Number: 2812 Class: 8 Packing group: III
Proper shipping name: Sodium aluminate, solid (Aluminum sodium oxide)

15. REGULATORY INFORMATION

OSHA Hazards
Corrosive

DSL Status
All components of this product are on the Canadian DSL list.

SARA 302 Components
SARA 302: No chemicals in this material are subject to the reporting requirements of SARA Title III, Section 302.

SARA 313 Components
SARA 313: This material does not contain any chemical components with known CAS numbers that exceed the threshold (De Minimis) reporting levels established by SARA Title III, Section 313.

SARA 311/312 Hazards
Acute Health Hazard

Massachusetts Right To Know Components
No components are subject to the Massachusetts Right to Know Act.

Pennsylvania Right To Know Components

	CAS-No.	Revision Date
Aluminum sodium oxide	11138-49-1	2007-03-01

New Jersey Right To Know Components

	CAS-No.	Revision Date
Aluminum sodium oxide	11138-49-1	2007-03-01

California Prop. 65 Components
This product does not contain any chemicals known to State of California to cause cancer, birth defects, or any other reproductive harm.

16. OTHER INFORMATION

Further information
Copyright 2010 Sigma-Aldrich Co. License granted to make unlimited paper copies for internal use only.

The above information is believed to be correct but does not purport to be all inclusive and shall be used only as a guide. The information in this document is based on the present state of our knowledge and is applicable to the product with regard to appropriate safety precautions. It does not represent any guarantee of the properties of the product. Sigma-Aldrich Co., shall not be held liable for any damage resulting from handling or from contact with the above product. See reverse side of invoice or packing slip for additional terms and conditions of sale.

Safety data for sodium aluminate, anhydrous

Glossary of terms on this data sheet.

The information on this web page is provided to help you to work safely, but it is intended to be an overview of hazards, not a replacement for a full Material Safety Data Sheet (MSDS). MSDS forms can be downloaded from the web sites of many chemical suppliers.

General

Synonyms: beta alumina, dynaflock L, sodium beta-alumina, sodium aluminium oxide, sodium polyaluminate
Use:
Molecular formula: $NaAlH_4O_4$
CAS No: 11138-49-1
EINECS No: 235-487-0
Annex I Index No:

Physical data

Appearance: solid
Melting point:
Boiling point:
Vapour density:
Vapour pressure:
Density (g cm^{-3}):
Flash point:
Explosion limits:
Autoignition temperature:
Water solubility:

Stability

MSD 011611

Stable. Incompatible with strong oxidizing agents.

Toxicology

Corrosive - contact may cause severe burns. Very destructive of mucous membranes.

Toxicity data
(The meaning of any toxicological abbreviations which appear in this section is given here.)

Risk phrases
(The meaning of any risk phrases which appear in this section is given here.)
R35.

Transport information

(The meaning of any UN hazard codes which appear in this section is given here.)
UN No 3260. Hazard class 8. Packing group III.

Personal protection

Safety glasses, gloves, adequate ventilation.

Safety phrases
(The meaning of any safety phrases which appear in this section is given here.)
S26 S36 S37 S39 S45.

[Return to Physical & Theoretical Chemistry Lab. Safety home page.]

This information was last updated on May 13, 2008. We have tried to make it as accurate and useful as possible, but can take no responsibility for its use, misuse, or accuracy. We have not verified this information, and cannot guarantee that it is up-to-date.

Note also that the information on the PTCL Safety web site, where this page was hosted, has been copied onto many other sites, often without permission. If you have any doubts about the veracity of the information that you are viewing, or have any queries, please check the URL that your web browser displays for this page. If the URL **begins** "http://msds.chem.ox.ac.uk/" the page is maintained by the Safety Officer in Physical Chemistry at Oxford University. If not, this page is a copy made by some other person and we have no responsibility for it.

METROPOLITAN ST. LOUIS SEWER DISTRICT
INDUSTRIAL FACILITY REINSPECTION REPORT

Company: Mallinckrodt, Inc. Account #: 2112059600
Premise Address: 3600 N. 2nd St. Zip Code: 63147
MSD Classes: SIU ☒ CIU ☒ Surch ☒ Potential Toxic Waste ☒ Non-Toxic Proc Waste ☐
No Process Flow ☐ Multi-User ☐ Special Handling/Billing ☐
Company Representative: Lisa Meyer
Title: H,S,& E Engineer Phone#: 314-654-3374
Inspector: Jason Gill
Others Present: None
Inspection Date: 11/23/10 Time: From 9:00 AM To 1:00 PM (Last Insp. 1/28/10)

NOTE: ALL ITEMS ARE TO BE COMPLETED BASED ON EVENTS SINCE LAST INSPECTION. ANSWERS ARE BASED ON INFORMATION OBTAINED OR PROVIDED BY COMPANY DURING INSPECTION, AS WELL AS INFORMATION IN FILE.

***** DATABASE ALSO UPDATED WITH APPROPRIATE CHANGES - see attached database reports *****

1. A. ARE THERE ADDITIONAL NON-STORMWATER ACCOUNT NUMBERS? Yes☐ No☒
   List them, note any changes: _____
   B. Did all acct no's have water usage on PIMS? Yes☒ No☐
   C. If no to B, explain: _____

2. PROCESSES & CLEANUP/WASHDOWN:

	Cont/ Batch		Water Used?	Frequency of discharge		Sample pt.
Chemical synthesis & extraction of pharmaceutical drugs	Batch		Yes	Daily		Multiple SP's
Stearate mfg.	Batch		Yes	Daily		905
Imaging compound mfg.	Batch		Yes	Daily		912
Inorganic compound mfg.	Batch		Yes	Daily		010
Pharmaceutical dosage mfg.	Batch		Yes	Daily		938
	(None)		N/A			

3. PRETREATMENT (other than grease traps) - describe:

	Sample pt.
pH adjustment	010, 005, 080, 912, 930, 933
Steam stripping (PEG systems 1 & 2), methanol stripping	920, 935, 937
Oil interceptor	010, 003

4. DOES COMPANY HAVE ANY GREASE TRAPS? Yes☐ No☒
   If yes: A. List sample points: _____
   B. What is the frequency for cleaning & maintenance? _____
   C. Are any additives used in traps? Yes☐ No☐
   D. If yes to C, was co. warned MSD will bill them for blockages they cause? Yes☐ No☐
   E. Was co. informed that MSD performs separate grease trap inspections? Yes☐ No☐

5. HAS COMPANY CONSTRUCTED NEW BLDGS/ADDITIONS WITH SEWERS SINCE LAST INSP? Yes☐ No☒
   If yes: A. Ask company: Did they notify MSD's Plan Review group? Unknown☐ Yes☐ No☐
   B. If no or unknown, has inspector notified Plan Review group? Yes☐ No☐
   C. Comments: _____

6. HAS COMPANY BEGUN DISCHARGING ANY NEW POLLUTANTS SINCE THE LAST INSP? Yes☐ No☒
   If yes: A. List pollutants & process: _____
   B. Will MSD STP exceed existing NPDES discharge limit(s)? Yes☐ No☐
   C. Will MSD STP's discharge exceed 0.1 mg/l for any new pollutant? Yes☐ No☐
   (MSD must notify MDNR if B or C is yes and discharge will continue.)
   D. Comments: _____

MSD 011613

7. ARE THERE ANY FEDERALLY REGULATED (40 CFR 405-471) OPERATIONS? Yes☒ No☐

If yes: A. List reg. & describe (including any discharge):
40 CFR 439 Sub B,C,&D [Sub E NA (no stds)] PSES - pharmaceutical mfg., discharge to sewer or PEG treatment system; 414 Sub G&H PSES - stearates, discharge to sewer; 415 Sub B&K PSES (no stds) - zinc sulfate process (inactive)

8. DOES CATEGORICAL WASTEWATER COMBINE WITH NON-CAT. WW PRIOR TO SAMPLING? Yes☐ No☒

If yes: A. At which points? _____
B. Current applied factor: _____ Is it correct? Yes☐ No☐
C. If no, list correct factor/explain? _____

9. IS ANY WASTEWATER SUBJECT TO PRODUCTION OR MASS BASED STANDARDS? Yes☒ No☐

If yes: A. At which points? 905 & 912
B. Since calculation of the current limits, has the long term avg production rate or discharge volume changed by 20% or more? Yes☐ No☒
C. If yes to B, explain: _____

10. ARE ANY RADIOACTIVE MATERIALS HANDLED? Yes☒ No☐

If yes: A. Describe operations & disposal: Soil remediation (none in process)
B. Does company have MSD authorization for disposal to sewer? NA☐ Yes☒ No☐
C. Most recent authorization date: 7/8/94
D. Amount discharged in most recent complete calendar year: 0

11. DOES PROCESS or P&E WASHDOWN WATER USE APPEAR EXCESSIVE? Yes☐ No☒

A. Explain how use was verified & any needed changes:
Pharmaceutical extraction & synthesis processes are very water-intensive and occur on a large scale. Water was slightly down on account of the strike this year. Water is recirculated when possible.

12. BASED ON OBSERVATIONS DURING INSPECTION, DOES COMPANY APPEAR TO HAVE SOME WATER THAT IS NOT DISCHARGED TO SEWER? Yes☒ No☐

If yes: A. Describe: Evaporative loss from process and HVAC systems; water in product
B. Was "Return Factor Program" brochure given to company? Yes☒ No☐
(regardless of whether some water is not discharged to sewer)

13. HAS COMPANY EXCEEDED ORDINANCE DISCHARGE LIMITS SINCE LAST INSPECTION OR WITHIN THE LAST 12 MONTHS (if last insp <12 months ago)? Yes☐ No☒

If yes: A.

Pollutant	When	Sample Points	Is problem resolved? Yes/No	Describe
			N/A	
			N/A	
			N/A	
			N/A	
			N/A	

B. Comments: _____

14. HAS COMPANY EXCEEDED CATEGORICAL PRETREATMENT LIMITS SINCE THE LAST INSPECTION OR WITHIN THE LAST 12 MONTHS? NA☐ Yes☐ No☒

If yes: A.

Pollutant	When	Sample Points	Is problem resolved? Yes/No	Describe
			N/A	
			N/A	
			N/A	
			N/A	
			N/A	

B. Comments: _____

15. HAVE THERE BEEN ANY PROBLEM DISCHARGES SINCE LAST INSPECTION? Yes☒ No☐

If yes: A. Upsets? ☐ Bypasses of pretreatment facilities?☒
Spills? ☒ Slug discharges? ☐ Other? ____

B. Explain any marked: 5/13/10 spill of Ioversol solution - failed clamp replaced; 5/23/10 release of organic plant material slurry - valve was misaligned, workers were retrained; 8/10/10 release of sodium hydroxide solution, pH probe maintenance is being evaluated; 10/16/10 release of acetonitrile - valve was misaligned, workers retrained; 10/30/10 release of glycol from roof condensors

16. COULD SPILLS OR LEAKS OF PROCESS TANKS, STORED WASTES, OR STORED CHEMICALS EASILY REACH SANITARY SEWERS OR STORM DRAINS? Yes☐ No☒

If yes: A. What needs to be done? ____

If no: B. How are they controlled?
Spill kits including berms, pigs, mats, etc. are strategically located throughout the facility. Tank farms of bulk raw materials are contained within concrete walls. A hazardous waste storage building is located at the far end of the property. A 24-hour emergency response team handles spill situations.

17. BASED ON OBSERVATIONS DURING INSPECTION, ARE THERE ANY AREAS WHERE COMPANY ACTIVITIES APPEAR TO IMPAIR STORMWATER RUNOFF? Yes☐ No☒

If yes: A. Describe: ____
B. What needs to be done? ____
C. Was "Illicit Stormwater Discharges" brochure given to company? Yes☒ No☐
(regardless of whether there are any problem areas)

18. DOES COMPANY HAVE ANY SPILL CONTROL OR SLUG DISCHARGE CONTROL PLANS? Yes☒ No☐

If yes: A.

	Title	Last Update	Update needed? Explain if yes
1.	SPCCP	3/1/10	No
2.			N/A

B. Are any Plans needed (in addition to those listed in Part A)? Yes☐ No☒
(If yes, write company and request)

19. DOES COMPANY HAVE ANY MAINTENANCE SHOP PARTS WASHERS? Yes☒ No☐

If yes: A. Parts washer solvent name: Crystal Clean Parts washing solvent
B. Priority pollutants (or "none"): None
C. How is spent solvent disposed? Hauled off site
(Parts washer solvents are not included in database's priority pollutants list, nor monitored for unless conditions show potential discharges)

20. ARE ANY ORGANICS OR SOLVENTS USED (OTHER THAN IN PARTS WASHERS)? Yes☒ No☐

If yes: A.

Solvent name/ components	Used for?	413/433/469 Process?	How disposed?	Priority Pollutant?
(see complete solvent list in file from 1/28/10 insp.	Extraction & synthesis processes	Yes☐ No☒	Hauled off site or destroyed in PEG strippers	Yes☒ No☐
		Yes☐ No☐		Yes☐ No☐
		Yes☐ No☐		Yes☐ No☐
		Yes☐ No☐		Yes☐ No☐
		Yes☐ No☐		Yes☐ No☐
		Yes☐ No☐		Yes☐ No☐

MSD 011615

21. DOES COMPANY HAVE A 413/433/469 SOLVENT MANAGEMENT PLAN? Yes☐ No☒

If yes: A. Is it part of a Spill/Slug Control Plan listed above? Yes[1.☐ 2.☐] No☐

B. If no to A, date of last update for SMP: _____

C. Is there a copy of the Spill/Slug Plan or SMP in the files? Yes☐ No☐

D. Does SMP address all 413/433/469 solvents? Yes☐ No☐

(If no to C or D, write company and require submittal and/or update)

22. ARE EMERGENCY NOTIFICATION PROCEDURES POSTED THAT INCLUDE MSD CONTACTS? Yes☒ No☐

A. Was company provided notification cards & told to post where emergency response personnel can locate them? Yes☒ No☐

(Must post if co. generates process wastewater or stores chemicals of concern)

23. IS COMPANY REQUIRED TO SELF-MONITOR ANY OF THEIR DISCHARGES? Yes☒ No☐

If yes: A. Is requirement contained in permit ☒ or other document ☐.

B. If other document, date & description: _____

C. How frequently is sampling required? Quarterly, 912 monthly

D. How frequently are reports required? Quarterly

E. Have reports been on-time, complete & signed by proper person? Yes☒ No☐

F. If no, explain: _____

24. DOES COMPANY SELF-MONITOR ITS WASTEWATER DISCHARGE? Yes☒ No☐

If yes: A. Is the self-monitoring required by MSD? Yes☒ No☐

B. Does sample collection time period match co's production shifts? Yes☒ No☐

C. Are representative grab/comp samples collected? Yes☒ No☐

D. Are EPA-approved 40 CFR 136 wastewater test methods used? Yes☒ No☐

E. If no to B, C, or D, explain needed changes: _____

25. DOES CO. CONTINUOUSLY MONITOR AT SAMPLE POINT AND KEEP A PERMANENT RECORD FOR: pH ☒, TEMP ☐, LEL ☐? Yes☒ No☐

If yes: A. At which SPs? 010

B. Does company submit quarterly summaries? Yes☒ No☐

C. If no, explain: _____

26. DOES MSD SPLIT SAMPLES WITH THE COMPANY? Yes☐ No☒

If yes: A. Is company having the samples analyzed Yes☐ No☐

B. How does company insure proper preservation, holding times & analytical methods? _____

C. Has company submitted results of all split sample analyses since the last insp? Yes☐ No☐

D. Have results been submitted within 28 days of the collection's calendar quarter? Yes☐ No☐

E. If no to C, or D, explain: _____

F. Does company still want to split samples? Yes☐ No☐

G. Comments: _____

27. IS COMPANY UNDER ANY ENVIRONMENTAL ENFORCEMENT ORDERS OR REQUIREMENTS TO SUBMIT COMPLIANCE SCHEDULE REPORTS? Yes☐ No☒

If yes: A. Type and date: _____

B. Have the reports & actions been on-time & complete? Yes☐ No☐

C. If no, explain: _____

28. ASK COMPANY: IS CO. IN COMPLIANCE W/APPLICABLE NESHAP REGS FOR WW DISCHARGES? Yes☒ No☐

[Some MDNR-issued Title V air permits for specific processes allow pre-approved WW discharge.] [City/County-issued air permits are not NESHAP permits.]

If no: A. Describe: _____

B. Was MDNR Air Pollution Control informed? (must be done) Yes☐ No☐

29. DOES COMPANY RETAIN ALL WASTEWATER RECORDS FOR AT LEAST 5 YEARS? Yes☒ No☐

If no: A. How long does company retain records? _____

B. Was company told to retain for at least 5 years, per ordinance? Yes☐ No☐

C. Where are they kept? HSE Library, Bldg Z, 4th floor

30. DO MSD CLASSIFICATIONS NEED TO BE REVISED? Yes☐ No☒

If yes: A. Indicate correct classifications:

SIU ☐ CIU ☐ Surch. ☐ Potential Toxic Waste ☐ Non-Toxic Proc Waste ☐

No Process Discharge ☐ Multi-User ☐ Special Handling/Billing ☐

B. Explain changes: _____

31. SAMPLE POINTS DJ(y/n)

SP #		Fed.Reg.		Components:	(refer to updated list on IDS with report)	No
SP #		Fed.Reg.		Components:		N/A
SP #		Fed.Reg.		Components:		N/A
SP #		Fed.Reg.		Components:		N/A
SP #		Fed.Reg.		Components:		N/A

32. ARE ANY SAMPLE POINTS TRAPPED VENTS? Yes☐ No☒

If yes: A. List SPs: _____

B. Was co. informed that T-vents are preferred, and told why? Yes☐ No☐

33. ARE DISCHARGES AT ANY SPs SMALL/IRREGULAR ENOUGH TO ALLOW GRAB SAMPLES? Yes☒ No☐

If yes: A. List SPs and reasons: 001 - low flow from sanitary only source

34. ARE THERE ANY UNSAMPLED DISCHARGES? (list each lateral separately) Yes☒ No☐

Dummy SP #	099	Components:	Difference between upsteam 009 & downstream 003
Dummy SP #		Components:	

35. DO ANY SAMPLE POINTS (including Unsampled/Dummy SPs) RECEIVE STORMWATER? Yes☒ No☐

If yes: A. List Sample Points: 001, 003, 008, 009, 010, 011, 080, 099

36. WERE ALL SAMPLE POINTS (except Dummy SPs) OPENED & INSPECTED? No SPs☐ Yes☒ No☐

A. If any SPs cannot be located or opened, explain: _____

B. If any SP descript's need to be changed, explain: _____

C. Was ANY grease or other problem/debris observed in any SP? Yes☐ No☒

D. If yes to C, list SPs & describe: _____

E. If yes to C, was company directed to take corrective actions? Yes☐ No☐

37. REVIEW THE SAMPLE POINT MAP! Last map revision date: 1/28/10

A. Is the map correct and accurate in all its details? Yes☒ No☐

B If no, what changes are needed: _____

38. DO INSTRUCTIONS FOR "Contact Prior to Sampling" OR FIELD VISIT "Special Instructions" NEED REVISION? Yes☐ No☒

If yes: A. List needed changes: _____

USE THIS SPACE FOR ANY OTHER COMMENTS/OBSERVATIONS PERTINENT TO YOUR INSPECTION OF THIS SITE.
A strike took place this year last from May - October 2010. Production was slower during these months due to the training of temporary workers that replaced the striking employees.

Storm water has been added to 003, 009, 080, and 099 in PIMS.

Building 101, the warehouse building on the far end of the campus, will be demolished later on this year.

METROPOLITAN ST. LOUIS SEWER DISTRICT
INDUSTRIAL DATA SHEET - FACILITY INFORMATION

INDUSTRY NAME **MALLINCKRODT INC**
PRIMARY MSD ACCOUNT NO. **2112059600**

Premise Address 3600 N 2nd St
St. Louis MO. 63147

INDUSTRIAL USER CLASSIFICATIONS

03/06/1997	SIU
03/06/1997	CIU
03/06/1997	SCH
03/06/1997	PTW

WUNNENBERG INFO.

Base Map 17D4
Wun: St. Louis City & Co.
Grid: E 18 Page 27

SIU CRITERIA

CAT Process subject to Cat Stds under 40 CFR 40
PR25 Process Disch => 25,000 GPD

GENERAL INFORMATION

Office Mailing Address
3600 N. 2nd Street
St. Louis, MO. 63147

Billing Address
3600 N. 2nd St.
St. Louis, MO. 63147

INSPECTION INFORMATION

Next Due	Insp Rslt	
11/23/2010	RIN	Jason Gill

PERMIT INFORMATION

Issue Date:	05/01/2003
Expire Date:	02/28/2550
Extended Date:	03/24/2004
Writer	Fabian Grabski
Issue Date:	06/01/2010
Expire Date:	05/31/2015
Extended Date:	
Writer	Scott Rehmer

IUQ INFORMATION

IUQ Recvd Date:	08/31/1999
Reviewer:	Fabian Grabski
IUQ Recvd Date:	10/04/2004
Reviewer:	Jason Gill
IUQ Recvd Date:	12/01/2009
Reviewer:	Jason Gill

CONTACTS

BILL	Lisa Meyer	HS&E Engineer	OFF	(314) 654-3374 Ext.
FLD1	Lisa Meyer	HS&E Engineer	FAX	(314) 654-1251 Ext.
	Lisa Meyer	HS&E Engineer	OFF	(314) 654-3374 Ext.
	Lisa Meyer	HS&E Engineer	SWR	(314) 654-2000 Ext.
FLD2	Jeff DeWald	HS&E Engineer	OFF	(314) 654-1294 Ext.
OFF1	Lisa Meyer	HS&E Engineer	OFF	(314) 654-3374 Ext.
OFF2	Jeff DeWald	HS&E Engineer	OFF	(314) 654-1294 Ext.

OPERATIONAL INFORMATION

Work Days: 7

				S	M	T	W	T	F	S
1	808	07:00AM	8.0	Y	Y	Y	Y	Y	Y	Y
2	86	03:20PM	8.0	Y	Y	Y	Y	Y	Y	Y
3	84	11:10PM	8.0	Y	Y	Y	Y	Y	Y	Y

Total Emp: 978 **Hrs:** 24.0

OTHER AGENCIES INFORMATION

11/18/1996	MDNR - Hazardous Waste Program	01029
11/19/1996	EPA - Hazardous Waste Program	MOD096726484
11/01/1997	Nuclear Regulatory Commission	24-05804-02
09/28/2005	MSD - Billing Account Number	00118821

NON-SEWERED WASTE

On-Site Storage Y **On-Site Disposal** N **Off-Site Disposal** Y

12/01/2009	Solvents/Thinners	1,109,000	LBS
12/01/2009	Paints or Paint Sludges	1,400	LBS
12/01/2009	Equipment Oils and/or Grease	16,000	LBS
12/01/2009	Acids and/or Alkalies	1,428,000	LBS
12/01/2009	Infectious Waste	600	LBS
12/01/2009	Kitchen/Food Service Grease	1,000	LBS
12/01/2009	Organic Compounds	781,600	LBS

COMMENTS

RAW MATERIALS

EFF DATE	MATERIAL_DESCRIPTION	QUANTITY	UNIT

SIC INFORMATION

SIC	DESCRIPTION
2816	Inorganic Pigments
2819	Industrial Inorganic Chemicals, N.E.C.
2833	Medicinal Chemicals & Botanical Products
2834	Pharmaceutical Preparations
2835	In Vitro & In Vivo Diagnostic Substances
2869	Industrial Organic Chemicals, N.E. C.

PRODUCTS

EFF DATE	DESCRIPTION	UNIT	AVG_PROD	MAX_PROD
05/07/2004	Industrial chemicals			
05/07/2004	FDA drugs			

Report No. PIMS012A 12/14/2010 4:09:19 pm
Data Date & Time: 12/14/2010 4:09:21 pm

METROPOLITAN ST. LOUIS SEWER DISTRICT
INDUSTRIAL DATA SHEET - FACILITY INFORMATION

INDUSTRY NAME **MALLINCKRODT INC**
PRIMARY MSD ACCOUNT NO. **2112059600**

Premise Address 3600 N 2nd St
St. Louis MO. 63147

SEWER ACCOUNTS

Sewer Accounts
2112059600

WATER CONSUMPTION AND WASTEWATER DISCHARGE

Start Date = 01/01/2009 12:00:00AM **End Date =** 12/31/2010 12:59:59PM

Acct. No.			Consumption			Wdays	Cdays	Discharge	
2112059600			**CCF's**	**Gallons**				**Gal/ Wday**	**Gal/ Cday**
2112059600	12/18/2008	03/09/2009	176,416	176,416	A	82	82	82	
2112059600	03/10/2009	06/30/2009	159,256	335,672		113	113	195	
2112059600	07/01/2009	10/13/2009	216,226	551,898		105	105	300	
2112059600	10/14/2009	12/28/2009	108,226	660,124		76	76	376	
2112059600	12/29/2009	03/26/2010	126,190	786,314		88	88	464	
2112059600	03/27/2010	06/24/2010	102,312	888,626		90	90	554	
RF 0.96	**Acct. Total**		888,626	664,738,457		554	554	1,151,893	1,151,893
	Facility Total		888,626						

METROPOLITAN ST. LOUIS SEWER DISTRICT
INDUSTRIAL DATA SHEET - FACILITY INFORMATION

INDUSTRY NAME **MALLINCKRODT INC**
PRIMARY MSD ACCOUNT NO. **2112059600**

Premise Address 3600 N 2nd St
St. Louis MO. 63147

CONNECTION and SAMPLE POINT INFORMATION

LATERAL NO.	Lateral Type	DSMH	Treatment Area	Bissell Point
01	Sanitary Or Combined	17D3 028C	Trunk Sewer	Salisbury

Description Multiple lines from buildings in Plant 6E, East into 12" line

Sewer Route Discharge to Destrehan St and to Salisbury trunk

SAMPLE POINT NO. 001 Ordinance **NPDES Outfall No.**

Description MH (Gatewell) at foot of Destrahan 100' E of RR

Discharge Components	Process Description	Avg Flow	Unit	Max Flow	Unit	RUD	Effective Date
Sanitary		1,000	GPD		GPD	D	12/1/09
Storm Water		0	GPD		GPD	D	12/1/09
	Total Flow Avg =	**1,000**		**Max =**			

CONNECTION and SAMPLE POINT INFORMATION

LATERAL NO.	Lateral Type	DSMH	Treatment Area	Bissell Point
02	Sanitary Or Combined	17D4 072C	Trunk Sewer	Salisbury

Description 6" line SW from Building 96 to Salisbury St

Sewer Route East on Salisbury across Hall St. in 5' brick sewer to trunk, N to treatment plant

SAMPLE POINT NO. 002 Ordinance **NPDES Outfall No.**

Description MH 5' S of bldg #96, 30' E of SP 003, (6" pipe from NE, 3' down)

Discharge Components	Process Description	Avg Flow	Unit	Max Flow	Unit	RUD	Effective Date
Sanitary		2,200	GPD		GPD	D	12/1/09
	Total Flow Avg =	**2,200**		**Max =**			

CONNECTION and SAMPLE POINT INFORMATION

LATERAL NO.	Lateral Type	DSMH	Treatment Area	Bissell Point
04	Sanitary Or Combined	17D4 086C	Trunk Sewer	Salisbury

Description 6" line West from Bldg 98 to Broadway

Sewer Route South on Broadway in 27" pipe to Salisbury, E across Hall St. in 5' brick sewer to trunk, N to treatment plant

SAMPLE POINT NO. 080 Combined (Ord/Cat) **NPDES Outfall No.**

Description Inlet to sump (double MH) N of building #98

Discharge Components	Process Description	Avg Flow	Unit	Max Flow	Unit	RUD	Effective Date
Categorical	439 Sub C PSES (CN-no, NH3 exempt) (CWF-no)	2,500	GPD		GPD	R	12/1/09
Laboratory Waste		1,000	GPD		GPD	D	12/1/09
Storm Water		0	GPD		GPD	D	11/23/10
	Total Flow Avg =	**3,500**		**Max =**			

CONNECTION and SAMPLE POINT INFORMATION

LATERAL NO.	Lateral Type	DSMH	Treatment Area	Bissell Point
05	Sanitary Or Combined	17D4 071C	Trunk Sewer	Salisbury

Description 8" pipe South from Bldg 96 to Salisbury

Sewer Route East on Salisbury across Hall St. in 5' brick sewer to trunk, N to treatment plant

SAMPLE POINT NO. 005 Ordinance **NPDES Outfall No.**

Description MH 5' S of building #96, 30' E of SP 003 (Center pipe, 8" dia., 3' down)

Discharge Components	Process Description	Avg Flow	Unit	Max Flow	Unit	RUD	Effective Date
Non Contact Cooling Water		1,000	GPD		GPD	D	12/1/09
Laboratory Waste	R&D waste (including 439 from bldg 96)	31,000	GPD		GPD	D	12/1/09
	Total Flow Avg =	**32,000**		**Max =**			

METROPOLITAN ST. LOUIS SEWER DISTRICT
INDUSTRIAL DATA SHEET - FACILITY INFORMATION

INDUSTRY NAME **MALLINCKRODT INC**
PRIMARY MSD ACCOUNT NO. **2112059600**

Premise Address 3600 N 2nd St
St. Louis MO. 63147

CONNECTION and SAMPLE POINT INFORMATION

LATERAL NO.	Lateral Type	DSMH	Treatment Area	Bissell Point
06	Sanitary Or Combined	17D4 066C	Trunk Sewer	Salisbury

Description 15" line from Pump St overflow chamber North to Salisbury

Sewer Route East on Salisbury across Hall St. in 5' brick sewer to trunk, N to treatment plant

SAMPLE POINT NO. 008 Ordinance **NPDES Outfall No.**

Description Oveflow chamber on N side of pump station on W side of building T

Discharge Components	Process Description	Avg Flow	Unit	Max Flow	Unit	RUD	Effective Date
Storm Water		0	GPD		GPD	D	12/1/09
Emergency Bypass	Pump station bypass to Salisbury trunk	0	GPD	1,440,000	GPD	D	12/1/09
	Total Flow Avg =	**0**		**Max =**	**1,440,000**		

CONNECTION and SAMPLE POINT INFORMATION

LATERAL NO.	Lateral Type	DSMH	Treatment Area	Bissell Point
10	Sanitary Or Combined	17D4 436C	Trunk Sewer	Interceptor Tunnel

Description 18" line North from neutralization system

Sewer Route E to Interceptor Tunnel, N to treatment plant

SAMPLE POINT NO. 010 Ordinance **NPDES Outfall No.**

Description MH w/square lid 50' N of neutralization control building at Hall & Salisbury

Discharge Components	Process Description	Avg Flow	Unit	Max Flow	Unit	RUD	Effective Date
Categorical	SP's 905,912,915,920,927,930,933,935,936,937,938	184,721	GPD		GPD	R	12/1/09
Non Categorical Process Waste		441,792	GPD		GPD	D	12/1/09
Sanitary		75,000	GPD		GPD	D	12/1/09
Kitchen Waste		2,500	GPD		GPD	D	12/1/09
Plant & Equipment Washdown		50,000	GPD		GPD	D	12/1/09
Boiler Blowdown		85,000	GPD		GPD	D	12/1/09
Laboratory Waste		68,000	GPD		GPD	D	12/1/09
Non Contact Cooling Water		149,000	GPD		GPD	D	12/1/09
Storm Water		0	GPD		GPD	D	12/1/09
Regeneration/Reject Water		86,900	GPD		GPD	D	12/1/09
	Total Flow Avg =	**1,142,913**		**Max =**			

SAMPLE POINT NO. 905 Categorical **NPDES Outfall No.**

Description MH inside building X, 12' W, 5' S of W door (Total flow out)

Discharge Components	Process Description	Avg Flow	Unit	Max Flow	Unit	RUD	Effective Date
Categorical	414 Sub G & H PSES (App A-no)	100,000	GPD		GPD	R	12/1/09
	Total Flow Avg =	**100,000**		**Max =**			

SAMPLE POINT NO. 912 Ordinance **NPDES Outfall No.**

Description Valve on discharge line from outdoor Tank #450 on SE corner of Building 504

Discharge Components	Process Description	Avg Flow	Unit	Max Flow	Unit	RUD	Effective Date
Non Categorical Process Waste	process waste from bldgs 504/505	150,000	GPD		GPD	D	12/1/09
	Total Flow Avg =	**150,000**		**Max =**			

SAMPLE POINT NO. 915 Categorical **NPDES Outfall No.**

Description Valve on E side of T-315 at inside NE corner of bldg 6

Discharge Components	Process Description	Avg Flow	Unit	Max Flow	Unit	RUD	Effective Date
Categorical	439 Sub C PSES (CN-no, MH3 exempt)	2,700	GPD		GPD	R	12/1/09
	Total Flow Avg =	**2,700**		**Max =**			

SAMPLE POINT NO. 920 Categorical **NPDES Outfall No.**

Description Valve on discharge line, outside SW corner of diked area E of bldg 512

Discharge Components	Process Description	Avg Flow	Unit	Max Flow	Unit	RUD	Effective Date

METROPOLITAN ST. LOUIS SEWER DISTRICT
INDUSTRIAL DATA SHEET - FACILITY INFORMATION

INDUSTRY NAME **MALLINCKRODT INC**
PRIMARY MSD ACCOUNT NO. **2112059600**

Premise Address 3600 N 2nd St
St. Louis MO. 63147

Categorical	439 Sub C PSES (CN-no,NH3 exempt) - with SP937	13,000	GPD		GPD	R	12/1/09
	Total Flow Avg =	**13,000**		**Max =**			

SAMPLE POINT NO. 927 Categorical **NPDES Outfall No.**

Description Tank 308 (acid press tank) in bldg 6

Discharge Components	Process Description	Avg Flow	Unit	Max Flow	Unit	RUD	Effective Date
Categorical	439 Sub B PSES	2,700	GPD		GPD	R	12/1/09
	Total Flow Avg =	**2,700**		**Max =**			

SAMPLE POINT NO. 930 Categorical **NPDES Outfall No.**

Description Valve on 4" PVC line inside NW corner of Bldg. 222S, only when sump is discharging from tanks 300 and 355

Discharge Components	Process Description	Avg Flow	Unit	Max Flow	Unit	RUD	Effective Date
Categorical	439 Sub B PSES	650	GPD		GPD	R	12/1/09
	Total Flow Avg =	**650**		**Max =**			

SAMPLE POINT NO. 933 Categorical **NPDES Outfall No.**

Description Valve on Tank #1 10' NW of SE corner of Bldg. 200W - only when disch. 439 waste

Discharge Components	Process Description	Avg Flow	Unit	Max Flow	Unit	RUD	Effective Date
Categorical	439 Sub B PSES	100	GPD		GPD	R	12/1/09
	Total Flow Avg =	**100**		**Max =**			

SAMPLE POINT NO. 935 Categorical **NPDES Outfall No.**

Description 1/2" steel pipe on inside of concrete wall S of North stairs - Bldg 512

Discharge Components	Process Description	Avg Flow	Unit	Max Flow	Unit	RUD	Effective Date
Categorical	Cat. 439 Sub C PSES (CN-no, NH3 exempt)	26,000	GPD		GPD	R	12/1/09
	Total Flow Avg =	**26,000**		**Max =**			

SAMPLE POINT NO. 936 Categorical **NPDES Outfall No.**

Description Valve on 1/2" line 1' from hydrogenerator bldg 8' from S wall in SE corner of bldg 260

Discharge Components	Process Description	Avg Flow	Unit	Max Flow	Unit	RUD	Effective Date
Categorical	439 Sub C PSES (CN-no, NH3 exempt)	16,500	GPD		GPD	R	12/1/09
	Total Flow Avg =	**16,500**		**Max =**			

SAMPLE POINT NO. 937 Categorical **NPDES Outfall No.**

Description Valve on 2nd level on W side near pipe bridge N of bldg 501

Discharge Components	Process Description	Avg Flow	Unit	Max Flow	Unit	RUD	Effective Date
Categorical	439 Sub C PSES (CN-no,NH3 exempt) - with SP937	23,000	GPD		GPD	R	12/1/09
	Total Flow Avg =	**23,000**		**Max =**			

SAMPLE POINT NO. 938 Categorical **NPDES Outfall No.**

Description 6" floor drain in far SW corner of room in Building 5, Room 406

Discharge Components	Process Description	Avg Flow	Unit	Max Flow	Unit	RUD	Effective Date
Categorical	439 Sub D PSNS	71	GPD		GPD	R	12/1/09
	Total Flow Avg =	**71**		**Max =**			

CONNECTION and SAMPLE POINT INFORMATION

LATERAL NO.	Lateral Type	DSMH		Treatment Area	Bissell Point
12	Sanitary Or Combined	17D3	016C	Trunk Sewer	Salisbury

Description Line flowing NE under bldg 223 to pump station (Plant 5 overflow)

Sewer Route NE, parallel to Destrehan Street under bldg 223, across Hall Street to pump station, N along Hall St. to STP

SAMPLE POINT NO. 011 Ordinance **NPDES Outfall No.**

Description MH with square lid 18' S from NW corner of bldg 223 under iron ladder

Discharge Components	Process Description	Avg Flow	Unit	Max Flow	Unit	RUD	Effective Date
Storm Water		0	GPD		GPD	D	12/1/09
Emergency Bypass	Overflow from Plant 5	0	GPD	14,000	GPD	D	12/1/09
	Total Flow Avg =	**0**		**Max =**	**14,000**		

METROPOLITAN ST. LOUIS SEWER DISTRICT
INDUSTRIAL DATA SHEET - FACILITY INFORMATION

INDUSTRY NAME **MALLINCKRODT INC**
PRIMARY MSD ACCOUNT NO. **2112059600**

Premise Address 3600 N 2nd St
St. Louis MO. 63147

CONNECTION and SAMPLE POINT INFORMATION

LATERAL NO.	Lateral Type	DSMH	Treatment Area	Bissell Point
99	Sanitary Or Combined	17D4 080C	Trunk Sewer	Salisbury

Description Multiple lines from buildings located West of N 2nd St to Salisbury

Sewer Route East on Salisbury across Hall St. in 5' brick sewer to trunk, N to treatment plant

SAMPLE POINT NO. 003 Ordinance **NPDES Outfall No.**

Description MH in alley at Salisbury, 12' W, 3' S of NW corner of building 91

Discharge Components	Process Description	Avg Flow	Unit	Max Flow	Unit	RUD	Effective Date
Sanitary		5,000	GPD		GPD	D	12/1/09
Laboratory Waste	439 Sub E NA (No Stds) & non-439 R&D	9,000	GPD		GPD	D	12/1/09
Non Categorical Process Waste	Machine shop, painting, parts washing	4,142	GPD		GPD	D	12/1/09
Flow From Upstream Sampler SP 009		11,000	GPD		GPD	D	12/1/09
Storm Water		0	GPD		GPD	D	11/23/10
	Total Flow Avg =	**29,142**		**Max =**			

SAMPLE POINT NO. 009 Ordinance **NPDES Outfall No.**

Description MH in Mallinckrodt St 27' E of Broadway, 4' from S curb

Discharge Components	Process Description	Avg Flow	Unit	Max Flow	Unit	RUD	Effective Date
Flow From Offsite	Offsite W of Broadway	11,000	GPD		GPD	D	12/1/09
Storm Water		0	GPD		GPD	D	11/23/10
	Total Flow Avg =	**11,000**		**Max =**			

SAMPLE POINT NO. 099 Ordinance **NPDES Outfall No.**

Description No sample point available (Represents WW contributions between upstream SP 009 & downstream SP 003)

Discharge Components	Process Description	Avg Flow	Unit	Max Flow	Unit	RUD	Effective Date
Laboratory Waste		9,000	GPD		GPD	D	12/1/09
Non Categorical Process Waste		4,142	GPD		GPD	D	12/1/09
Sanitary		5,000	GPD		GPD	D	12/1/09
Storm Water		0	GPD		GPD	D	11/23/10
	Total Flow Avg =	**18,142**		**Max =**			

PRETREATMENT TYPES

SP	EFF DATE	TYPE	DESCRIPTION
003	12/01/2009	DC35	Oil/Water Interceptor
005	11/05/1998	DC37	pH Adjustment / Neutralization
010	11/05/1998	DC37	pH Adjustment / Neutralization
010	11/21/2008	DC35	Oil/Water Interceptor
080	11/05/1998	DC37	pH Adjustment / Neutralization
809	10/16/1998	DC5	Carbon Absorption
809	10/16/1998	DC9	Clarification / Settling
809	10/16/1998	DC43	Ultrafiltration
809	10/16/1998	DC7	Chemical Precipitation
912	12/01/2009	DC37	pH Adjustment / Neutralization
920	02/28/2002	DC42	Steam Stripping
930	12/01/2009	DC37	pH Adjustment / Neutralization
933	12/01/2009	DC37	pH Adjustment / Neutralization
935	04/18/2006	DC42	Steam Stripping
937	06/26/2007	DC42	Steam Stripping

METROPOLITAN ST. LOUIS SEWER DISTRICT
INDUSTRIAL DATA SHEET - FACILITY INFORMATION

INDUSTRY NAME **MALLINCKRODT INC**
PRIMARY MSD ACCOUNT NO. **2112059600**

Premise Address 3600 N 2nd St
St. Louis MO. 63147

PRIORITY POLLUTANTS

Pollutant Description	Status	Pollutant Description	Status	Pollutant Description	Status
2,4-Dimethylphenol	SP	2,4-Dinitrotoluene	SP	2,4-Dichlorophenol	SP
2-Nitrophenol	SP	Phenanthrene	SP	N-Nitrosodimethylamine	SP
Hexachloroethane	SP	Hexachlorobutadiene	SP	Diethyl Phthalate	SP
Dieldrin	SP	Bis (2-EthylHexyl) Phthalate	KP	Dibromochloromethane	SP
Bromodichloromethane	SP	1,2-Dichlorobenzene	SP	Trichloroethene	KP
Ethylbenzene	KP	Acrylonitrile	SP	1,4-Dichlorobenzene	SP
1,1,2,2-Tetrachloroethane	KP	Cyanide (Total)	KP	Asbestos (Fibrous)	KP
Antimony (Total)	SP	Silver (Total)	SP	Copper (Total)	KP
Cadmium (Total)	KP	Zinc (Total)	KP	Nickel (Total)	KP
Mercury (Total)	KP	Lead (Total)	KP	Chromium (Total)	KP
Arsenic (Total)	SP	Phenol	KP	Dimethyl Phthalate	KP
4-Nitrophenol	SP	2,4-Dinitrophenol	SP	2-Chlorophenol	SP
Nitrobenzene	SP	Hexachlorocyclopentadiene	SP	Benzo (A) Pyrene	SP
Benzidine	SP	Acrolein	SP	Toluene	KP
Methylene Chloride	KP	Chloromethane	KP	Chlorobenzene	KP
1,3-Dichlorobenzene	SP	1,1,1-Trichloroethane	KP	Vinyl Chloride	KP
Tetrachloroethene	KP	Chloroform	KP	Carbon Tetrachloride	KP
Bromomethane	SP	Benzene	KP	1,2-Dichloroethane	SP
1,1,2-Trichloroethane	KP				

EXTRA STRENGTH SURCHARGE INFORMATION

07/06/2009	BOD	431
07/06/2009	COD	947
07/06/2009	TSS	83

PIMS FACILITY CONTACTS

For Account Number Selecte **2112059600** **MALLINCKRODT INC**

Located at 3600 N 2nd St
St. Louis MO 63147

Address Type

Contact Type	Contact Name		Contact Title	Phone Type	Number	Ext.
Billing Address						
Billing Contact	Lisa	Meyer	HS&E Engineer	OFF	(314)654-3374	
Office Mailing Address						
Office Contact - Primary	Lisa	Meyer	HS&E Engineer	OFF	(314)654-3374	
Office Contact 1st Alt	Jeff	DeWald	HS&E Engineer	OFF	(314)654-1294	
Premise Address						
Field Contact - Primary	Lisa	Meyer	HS&E Engineer	FAX	(314)654-1251	
Field Contact - Primary	Lisa	Meyer	HS&E Engineer	OFF	(314)654-3374	
Field Contact - Primary	Lisa	Meyer	HS&E Engineer	SWR	(314)654-2000	
Field Contact 1st Alt	Jeff	DeWald	HS&E Engineer	OFF	(314)654-1294	

MSD 011625

PIMS
REPORT OF FIELD SAMPLING REQUIREMENTS
MALLINCKRODT INC

Account No Entered 2112059600

SPN	PREMISE ADDRESS	CITY	ST	ZIP
	3600 N 2nd St	St. Louis	MO	63147

001 Project Code: IM = IPD - Company - MSD

Pollutant Group	Poll Code	Pollutant Description	Frequency	Sample Type	End Date
	T208000	Biochemical Oxygen Demand (5 Day)	Once/3 mo	Grab (Auth in lieu of composite)	03/31/2011
	T213000	Chemical Oxygen Demand	Once/3 mo	Grab (Auth in lieu of composite)	03/31/2011
	T237000	pH	Once/3 mo	Grab	03/31/2011
	T247000	Temperature	Once/3 mo	Grab	03/31/2011
	T256000	Total Suspended Solids	Once/3 mo	Grab (Auth in lieu of composite)	03/31/2011

002 Project Code: IM = IPD - Company - MSD

Pollutant Group	Poll Code	Pollutant Description	Frequency	Sample Type	End Date
	T208000	Biochemical Oxygen Demand (5 Day)	Once/3 mo	Comp-Time 04 Hrs	03/31/2011
	T213000	Chemical Oxygen Demand	Once/3 mo	Comp-Time 04 Hrs	03/31/2011
	T225000	Iron (Total)	Once/3 mo	Comp-Time 04 Hrs	03/31/2011
	T237000	pH	Once/3 mo	Grab	03/31/2011
	T247000	Temperature	Once/3 mo	Grab	03/31/2011
	T256000	Total Suspended Solids	Once/3 mo	Comp-Time 04 Hrs	03/31/2011

003 Project Code: IM = IPD - Company - MSD

Pollutant Group	Poll Code	Pollutant Description	Frequency	Sample Type	End Date
	T208000	Biochemical Oxygen Demand (5 Day)	Once/3 mo	Comp-Time 04 Hrs	03/31/2011
	T213000	Chemical Oxygen Demand	Once/3 mo	Comp-Time 04 Hrs	03/31/2011
	T234000	Oil and Grease (Total)	Once/3 mo	Grab	03/31/2011
	T237000	pH	Once/3 mo	Grab	03/31/2011
	T247000	Temperature	Once/3 mo	Grab	03/31/2011
	T256000	Total Suspended Solids	Once/3 mo	Comp-Time 04 Hrs	03/31/2011
	T299000	Acrolein	Once/year	Grab	06/30/2011
	T300000	Acrylonitrile	Once/year	Grab	06/30/2011
Pesticide Organics	T993000	Pesticide Organics	Once/year	Comp-Time 04 Hrs	06/30/2011
Semi-Volatile Organics - Base/Neutrals	T994000	Semi-Volatile Organics - Base/Neutrals	Once/year	Comp-Time 04 Hrs	06/30/2011
Semi-Volatile Organics - Acids	T995000	Semi-Volatile Organics - Acids	Once/year	Comp-Time 04 Hrs	06/30/2011
Volatile Organics	T996000	Volatile Organics	Once/year	Grab	06/30/2011

005 Project Code: IM = IPD - Company - MSD

Pollutant Group	Poll Code	Pollutant Description	Frequency	Sample Type	End Date
	T208000	Biochemical Oxygen Demand (5 Day)	Once/3 mo	Comp-Time 04 Hrs	03/31/2011
	T213000	Chemical Oxygen Demand	Once/3 mo	Comp-Time 04 Hrs	03/31/2011
	T237000	pH	Once/3 mo	Grab	03/31/2011
	T247000	Temperature	Once/3 mo	Grab	03/31/2011
	T256000	Total Suspended Solids	Once/3 mo	Comp-Time 04 Hrs	03/31/2011
	T340000	Cyanide Amenable to Chlorination	Once/3 mo	Grab	03/31/2011
	T299000	Acrolein	Once/year	Grab	06/30/2011
	T300000	Acrylonitrile	Once/year	Grab	06/30/2011
Pesticide Organics	T993000	Pesticide Organics	Once/year	Comp-Time 04 Hrs	06/30/2011
Semi-Volatile Organics - Base/Neutrals	T994000	Semi-Volatile Organics - Base/Neutrals	Once/year	Comp-Time 04 Hrs	06/30/2011
Semi-Volatile Organics - Acids	T995000	Semi-Volatile Organics - Acids	Once/year	Comp-Time 04 Hrs	06/30/2011
Volatile Organics	T996000	Volatile Organics	Once/year	Grab	06/30/2011

008 Project Code: IM = IPD - Company - MSD

Pollutant Group	Poll Code	Pollutant Description	Frequency	Sample Type	End Date
	T208000	Biochemical Oxygen Demand (5 Day)	Once/3 mo	Comp-Time 04 Hrs	03/31/2011
	T213000	Chemical Oxygen Demand	Once/3 mo	Comp-Time 04 Hrs	03/31/2011

Account No Entered 2112059600

SPN	PREMISE ADDRESS	CITY	ST	ZIP

	T234000	Oil and Grease (Total)	Once/3 mo	Grab	03/31/2011
	T237000	pH	Once/3 mo	Grab	03/31/2011
	T247000	Temperature	Once/3 mo	Grab	03/31/2011
	T256000	Total Suspended Solids	Once/3 mo	Comp-Time 04 Hrs	03/31/2011

009 Project Code: IM = IPD - Company - MSD

Pollutant Group	Poll Code	Pollutant Description	Frequency	Sample Type	End Date
	T208000	Biochemical Oxygen Demand (5 Day)	Once/3 mo	Comp-Time 04 Hrs	03/31/2011
	T213000	Chemical Oxygen Demand	Once/3 mo	Comp-Time 04 Hrs	03/31/2011
	T234000	Oil and Grease (Total)	Once/3 mo	Grab	03/31/2011
	T237000	pH	Once/3 mo	Grab	03/31/2011
	T247000	Temperature	Once/3 mo	Grab	03/31/2011
	T256000	Total Suspended Solids	Once/3 mo	Comp-Time 04 Hrs	03/31/2011
	T299000	Acrolein	Once/year	Grab	06/30/2011
	T300000	Acrylonitrile	Once/year	Grab	06/30/2011
Pesticide Organics	T993000	Pesticide Organics	Once/year	Comp-Time 04 Hrs	06/30/2011
Semi-Volatile Organics - Base/Neutrals	T994000	Semi-Volatile Organics - Base/Neutrals	Once/year	Comp-Time 04 Hrs	06/30/2011
Semi-Volatile Organics - Acids	T995000	Semi-Volatile Organics - Acids	Once/year	Comp-Time 04 Hrs	06/30/2011
Volatile Organics	T996000	Volatile Organics	Once/year	Grab	06/30/2011

010 Project Code: IM = IPD - Company - MSD

Pollutant Group	Poll Code	Pollutant Description	Frequency	Sample Type	End Date
	T208000	Biochemical Oxygen Demand (5 Day)	Once/3 mo	Comp-Time 04 Hrs	03/31/2011
	T213000	Chemical Oxygen Demand	Once/3 mo	Comp-Time 04 Hrs	03/31/2011
	T234000	Oil and Grease (Total)	Once/3 mo	Grab	03/31/2011
	T237000	pH	Once/3 mo	Grab	03/31/2011
	T247000	Temperature	Once/3 mo	Grab	03/31/2011
	T256000	Total Suspended Solids	Once/3 mo	Comp-Time 04 Hrs	03/31/2011
	T299000	Acrolein	Once/year	Grab	06/30/2011
	T300000	Acrylonitrile	Once/year	Grab	06/30/2011
	T335000	Chromium (Total)	Once/year	Comp-Time 04 Hrs	06/30/2011
	T339000	Copper (Total)	Once/year	Comp-Time 04 Hrs	06/30/2011
	T377000	Nickel (Total)	Once/year	Comp-Time 04 Hrs	06/30/2011
	T403000	Zinc (Total)	Once/year	Comp-Time 04 Hrs	06/30/2011
Pesticide Organics	T993000	Pesticide Organics	Once/year	Comp-Time 04 Hrs	06/30/2011
Semi-Volatile Organics - Base/Neutrals	T994000	Semi-Volatile Organics - Base/Neutrals	Once/year	Comp-Time 04 Hrs	06/30/2011
Semi-Volatile Organics - Acids	T995000	Semi-Volatile Organics - Acids	Once/year	Comp-Time 04 Hrs	06/30/2011
Volatile Organics	T996000	Volatile Organics	Once/year	Grab	06/30/2011

011 Project Code: IM = IPD - Company - MSD

Pollutant Group	Poll Code	Pollutant Description	Frequency	Sample Type	End Date
	T208000	Biochemical Oxygen Demand (5 Day)	Once/3 mo	Comp-Time 04 Hrs	03/31/2011
	T213000	Chemical Oxygen Demand	Once/3 mo	Comp-Time 04 Hrs	03/31/2011
	T234000	Oil and Grease (Total)	Once/3 mo	Grab	03/31/2011
	T237000	pH	Once/3 mo	Grab	03/31/2011
	T247000	Temperature	Once/3 mo	Grab	03/31/2011
	T256000	Total Suspended Solids	Once/3 mo	Comp-Time 04 Hrs	03/31/2011

080 Project Code: IM = IPD - Company - MSD

Pollutant Group	Poll Code	Pollutant Description	Frequency	Sample Type	End Date
	T208000	Biochemical Oxygen Demand (5 Day)	Once/3 mo	Comp-Time 04 Hrs	03/31/2011
	T213000	Chemical Oxygen Demand	Once/3 mo	Comp-Time 04 Hrs	03/31/2011
	T234000	Oil and Grease (Total)	Once/3 mo	Grab	03/31/2011

Account No Entered **2112059600**

SPN	PREMISE ADDRESS		CITY	ST	ZIP	
	T237000	pH	Once/3 mo	Grab		03/31/2011
	T247000	Temperature	Once/3 mo	Grab		03/31/2011
	T256000	Total Suspended Solids	Once/3 mo	Comp-Time 04 Hrs		03/31/2011
	T269000	1,2-Dichlorobenzene	Once/year	Grab		06/30/2011
	T270000	1,2-Dichloroethane	Once/year	Grab		06/30/2011
	T299000	Acrolein	Once/year	Grab		06/30/2011
	T300000	Acrylonitrile	Once/year	Grab		06/30/2011
	T309000	Benzene	Once/year	Grab		06/30/2011
	T330000	Chlorobenzene	Once/year	Grab		06/30/2011
	T332000	Chloroform	Once/year	Grab		06/30/2011
	T340000	Cyanide Amenable to Chlorination	Once/year	Grab		06/30/2011
	T341000	Cyanide (Total)	Once/year	Grab		06/30/2011
	T371000	Methylene Chloride	Once/year	Grab		06/30/2011
	T397000	Toluene	Once/year	Grab		06/30/2011
	T430000	Acetone	Once/year	Grab		06/30/2011
	T435000	Xylene	Once/year	Grab		06/30/2011
	T437000	4-Methyl-2-Pentanone	Once/year	Grab		06/30/2011
	T438000	Isobutyraldehyde	Once/year	Grab		06/30/2011
	T439000	n-Amyl Acetate	Once/year	Grab		06/30/2011
	T440000	n-Butyl Acetate	Once/year	Grab		06/30/2011
	T441000	Ethyl Acetate	Once/year	Grab		06/30/2011
	T442000	Isopropyl Acetate	Once/year	Grab		06/30/2011
	T443000	Methyl Formate	Once/year	Grab		06/30/2011
	T445000	Isopropyl Ether	Once/year	Grab		06/30/2011
	T446000	Tetrahydrofuran	Once/year	Grab		06/30/2011
	T447000	n-Hexane	Once/year	Grab		06/30/2011
	T448000	n-Heptane	Once/year	Grab		06/30/2011
	T449000	Diethylamine	Once/year	Grab		06/30/2011
	T550000	Triethylamine	Once/year	Grab		06/30/2011
Pesticide Organics	T993000	Pesticide Organics	Once/year	Comp-Time 04 Hrs		06/30/2011
Semi-Volatile Organics - Base/Neutrals	T994000	Semi-Volatile Organics - Base/Neutrals	Once/year	Comp-Time 04 Hrs		06/30/2011
Semi-Volatile Organics - Acids	T995000	Semi-Volatile Organics - Acids	Once/year	Comp-Time 04 Hrs		06/30/2011
Volatile Organics	T996000	Volatile Organics	Once/year	Grab		06/30/2011

905 Project Code: IM = IPD - Company - MSD

Pollutant Group	Poll Code	Pollutant Description	Frequency	Sample Type	End Date
	T263000	(cis & trans) 1,3-Dichloropropene	Once/year	Grab	06/30/2011
	T264000	1,1-Dichloroethane	Once/year	Grab	06/30/2011
	T265000	1,1-Dichloroethene	Once/year	Grab	06/30/2011
	T266000	1,1,1-Trichloroethane	Once/year	Grab	06/30/2011
	T267000	1,1,2-Trichloroethane	Once/year	Grab	06/30/2011
	T269000	1,2-Dichlorobenzene	Once/year	Grab	06/30/2011
	T270000	1,2-Dichloroethane	Once/year	Grab	06/30/2011
	T271000	1,2-Dichloropropane	Once/year	Grab	06/30/2011
	T273000	1,2,4-Trichlorobenzene	Once/year	Grab	06/30/2011
	T274000	1,3-Dichlorobenzene	Once/year	Grab	06/30/2011
	T275000	1,4-Dichlorobenzene	Once/year	Grab	06/30/2011
	T276000	2-Nitrophenol	Once/year	Grab	06/30/2011
	T288000	4-Nitrophenol	Once/year	Grab	06/30/2011
	T295000	4,6-Dinitro-2-Methylphenol	Once/year	Grab	06/30/2011
	T297000	Acenaphthene	Once/year	Grab	06/30/2011
	T302000	Anthracene	Once/year	Grab	06/30/2011
	T309000	Benzene	Once/year	Grab	06/30/2011
	T310000	Benzidine	Once/year	Grab	06/30/2011
	T321000	Bis (2-EthylHexyl) Phthalate	Once/year	Grab	06/30/2011
	T328000	Carbon Tetrachloride	Once/year	Grab	06/30/2011
	T330000	Chlorobenzene	Once/year	Grab	06/30/2011

Account No Entered **2112059600**

SPN	PREMISE ADDRESS		CITY	ST	ZIP	
	T331000	Chloroethane	Once/year	Grab		06/30/2011
	T332000	Chloroform	Once/year	Grab		06/30/2011
	T333000	Chloromethane	Once/year	Grab		06/30/2011
	T343000	Di-n-butyl Phthalate	Once/year	Grab		06/30/2011
	T348000	Diethyl Phthalate	Once/year	Grab		06/30/2011
	T349000	Dimethyl Phthalate	Once/year	Grab		06/30/2011
	T355000	Ethylbenzene	Once/year	Grab		06/30/2011
	T356000	Fluoranthene	Once/year	Grab		06/30/2011
	T357000	Fluorene	Once/year	Grab		06/30/2011
	T361000	Hexachlorobenzene	Once/year	Grab		06/30/2011
	T362000	Hexachlorobutadiene	Once/year	Grab		06/30/2011
	T364000	Hexachloroethane	Once/year	Grab		06/30/2011
	T371000	Methylene Chloride	Once/year	Grab		06/30/2011
	T375000	Naphthalene	Once/year	Grab		06/30/2011
	T378000	Nitrobenzene	Once/year	Grab		06/30/2011
	T387000	Phenanthrene	Once/year	Grab		06/30/2011
	T389000	Pyrene	Once/year	Grab		06/30/2011
	T394000	Tetrachloroethene	Once/year	Grab		06/30/2011
	T397000	Toluene	Once/year	Grab		06/30/2011
	T399000	Trans-1,2-Dichloroethene	Once/year	Grab		06/30/2011
	T400000	Trichloroethene	Once/year	Grab		06/30/2011
	T401000	Vinyl Chloride	Once/year	Grab		06/30/2011

912 Project Code: IM = IPD - Company - MSD

Pollutant Group	Poll Code	Pollutant Description	Frequency	Sample Type	End Date
	T553000	N,N-Dimethyl Acetamide	Once/year	Grab	06/30/2011

915 Project Code: IM = IPD - Company - MSD

Pollutant Group	Poll Code	Pollutant Description	Frequency	Sample Type	End Date
	T269000	1,2-Dichlorobenzene	Once/year	Grab	06/30/2011
	T270000	1,2-Dichloroethane	Once/year	Grab	06/30/2011
	T309000	Benzene	Once/year	Grab	06/30/2011
	T330000	Chlorobenzene	Once/year	Grab	06/30/2011
	T332000	Chloroform	Once/year	Grab	06/30/2011
	T371000	Methylene Chloride	Once/year	Grab	06/30/2011
	T397000	Toluene	Once/year	Grab	06/30/2011
	T430000	Acetone	Once/year	Grab	06/30/2011
	T435000	Xylene	Once/year	Grab	06/30/2011
	T437000	4-Methyl-2-Pentanone	Once/year	Grab	06/30/2011
	T438000	Isobutyraldehyde	Once/year	Grab	06/30/2011
	T439000	n-Amyl Acetate	Once/year	Grab	06/30/2011
	T440000	n-Butyl Acetate	Once/year	Grab	06/30/2011
	T441000	Ethyl Acetate	Once/year	Grab	06/30/2011
	T442000	Isopropyl Acetate	Once/year	Grab	06/30/2011
	T443000	Methyl Formate	Once/year	Grab	06/30/2011
	T445000	Isopropyl Ether	Once/year	Grab	06/30/2011
	T446000	Tetrahydrofuran	Once/year	Grab	06/30/2011
	T447000	n-Hexane	Once/year	Grab	06/30/2011
	T448000	n-Heptane	Once/year	Grab	06/30/2011
	T449000	Diethylamine	Once/year	Grab	06/30/2011
	T550000	Triethylamine	Once/year	Grab	06/30/2011

920 Project Code: IM = IPD - Company - MSD

Pollutant Group	Poll Code	Pollutant Description	Frequency	Sample Type	End Date
	T269000	1,2-Dichlorobenzene	Once/year	Grab	06/30/2011
	T270000	1,2-Dichloroethane	Once/year	Grab	06/30/2011

Account No Entered **2112059600**

SPN	PREMISE ADDRESS	CITY	ST	ZIP

T309000	Benzene	Once/year	Grab	06/30/2011
T330000	Chlorobenzene	Once/year	Grab	06/30/2011
T332000	Chloroform	Once/year	Grab	06/30/2011
T371000	Methylene Chloride	Once/year	Grab	06/30/2011
T397000	Toluene	Once/year	Grab	06/30/2011
T430000	Acetone	Once/year	Grab	06/30/2011
T435000	Xylene	Once/year	Grab	06/30/2011
T437000	4-Methyl-2-Pentanone	Once/year	Grab	06/30/2011
T438000	Isobutyraldehyde	Once/year	Grab	06/30/2011
T439000	n-Amyl Acetate	Once/year	Grab	06/30/2011
T440000	n-Butyl Acetate	Once/year	Grab	06/30/2011
T441000	Ethyl Acetate	Once/year	Grab	06/30/2011
T442000	Isopropyl Acetate	Once/year	Grab	06/30/2011
T443000	Methyl Formate	Once/year	Grab	06/30/2011
T445000	Isopropyl Ether	Once/year	Grab	06/30/2011
T446000	Tetrahydrofuran	Once/year	Grab	06/30/2011
T447000	n-Hexane	Once/year	Grab	06/30/2011
T448000	n-Heptane	Once/year	Grab	06/30/2011
T449000	Diethylamine	Once/year	Grab	06/30/2011
T550000	Triethylamine	Once/year	Grab	06/30/2011

927 Project Code: IM = IPD - Company - MSD

Pollutant Group	Poll Code	Pollutant Description	Frequency	Sample Type	End Date
	T371000	Methylene Chloride	Once/year	Grab	06/30/2011
	T430000	Acetone	Once/year	Grab	06/30/2011
	T439000	n-Amyl Acetate	Once/year	Grab	06/30/2011
	T441000	Ethyl Acetate	Once/year	Grab	06/30/2011
	T442000	Isopropyl Acetate	Once/year	Grab	06/30/2011

930 Project Code: IM = IPD - Company - MSD

Pollutant Group	Poll Code	Pollutant Description	Frequency	Sample Type	End Date
	T371000	Methylene Chloride	Once/year	Grab	06/30/2011
	T430000	Acetone	Once/year	Grab	06/30/2011
	T439000	n-Amyl Acetate	Once/year	Grab	06/30/2011
	T441000	Ethyl Acetate	Once/year	Grab	06/30/2011
	T442000	Isopropyl Acetate	Once/year	Grab	06/30/2011

933 Project Code: IM = IPD - Company - MSD

Pollutant Group	Poll Code	Pollutant Description	Frequency	Sample Type	End Date
	T371000	Methylene Chloride	Once/year	Grab	06/30/2011
	T430000	Acetone	Once/year	Grab	06/30/2011
	T439000	n-Amyl Acetate	Once/year	Grab	06/30/2011
	T441000	Ethyl Acetate	Once/year	Grab	06/30/2011
	T442000	Isopropyl Acetate	Once/year	Grab	06/30/2011

935 Project Code: IM = IPD - Company - MSD

Pollutant Group	Poll Code	Pollutant Description	Frequency	Sample Type	End Date
	T269000	1,2-Dichlorobenzene	Once/year	Grab	06/30/2011
	T270000	1,2-Dichloroethane	Once/year	Grab	06/30/2011
	T309000	Benzene	Once/year	Grab	06/30/2011
	T330000	Chlorobenzene	Once/year	Grab	06/30/2011
	T332000	Chloroform	Once/year	Grab	06/30/2011
	T371000	Methylene Chloride	Once/year	Grab	06/30/2011
	T397000	Toluene	Once/year	Grab	06/30/2011
	T430000	Acetone	Once/year	Grab	06/30/2011

Account No Entered **2112059600**

SPN	PREMISE ADDRESS	CITY	ST	ZIP

T435000	Xylene	Once/year	Grab	06/30/2011
T437000	4-Methyl-2-Pentanone	Once/year	Grab	06/30/2011
T438000	Isobutyraldehyde	Once/year	Grab	06/30/2011
T439000	n-Amyl Acetate	Once/year	Grab	06/30/2011
T440000	n-Butyl Acetate	Once/year	Grab	06/30/2011
T441000	Ethyl Acetate	Once/year	Grab	06/30/2011
T442000	Isopropyl Acetate	Once/year	Grab	06/30/2011
T443000	Methyl Formate	Once/year	Grab	06/30/2011
T445000	Isopropyl Ether	Once/year	Grab	06/30/2011
T446000	Tetrahydrofuran	Once/year	Grab	06/30/2011
T447000	n-Hexane	Once/year	Grab	06/30/2011
T448000	n-Heptane	Once/year	Grab	06/30/2011
T449000	Diethylamine	Once/year	Grab	06/30/2011
T550000	Triethylamine	Once/year	Grab	06/30/2011

936 Project Code: IM = IPD - Company - MSD

Pollutant Group	Poll Code	Pollutant Description	Frequency	Sample Type	End Date
	T269000	1,2-Dichlorobenzene	Once/year	Grab	06/30/2011
	T270000	1,2-Dichloroethane	Once/year	Grab	06/30/2011
	T309000	Benzene	Once/year	Grab	06/30/2011
	T330000	Chlorobenzene	Once/year	Grab	06/30/2011
	T332000	Chloroform	Once/year	Grab	06/30/2011
	T371000	Methylene Chloride	Once/year	Grab	06/30/2011
	T397000	Toluene	Once/year	Grab	06/30/2011
	T430000	Acetone	Once/year	Grab	06/30/2011
	T435000	Xylene	Once/year	Grab	06/30/2011
	T437000	4-Methyl-2-Pentanone	Once/year	Grab	06/30/2011
	T438000	Isobutyraldehyde	Once/year	Grab	06/30/2011
	T439000	n-Amyl Acetate	Once/year	Grab	06/30/2011
	T440000	n-Butyl Acetate	Once/year	Grab	06/30/2011
	T441000	Ethyl Acetate	Once/year	Grab	06/30/2011
	T442000	Isopropyl Acetate	Once/year	Grab	06/30/2011
	T443000	Methyl Formate	Once/year	Grab	06/30/2011
	T445000	Isopropyl Ether	Once/year	Grab	06/30/2011
	T446000	Tetrahydrofuran	Once/year	Grab	06/30/2011
	T447000	n-Hexane	Once/year	Grab	06/30/2011
	T448000	n-Heptane	Once/year	Grab	06/30/2011
	T449000	Diethylamine	Once/year	Grab	06/30/2011
	T550000	Triethylamine	Once/year	Grab	06/30/2011

937 Project Code: IM = IPD - Company - MSD

Pollutant Group	Poll Code	Pollutant Description	Frequency	Sample Type	End Date
	T269000	1,2-Dichlorobenzene	Once/year	Grab	06/30/2011
	T270000	1,2-Dichloroethane	Once/year	Grab	06/30/2011
	T309000	Benzene	Once/year	Grab	06/30/2011
	T330000	Chlorobenzene	Once/year	Grab	06/30/2011
	T332000	Chloroform	Once/year	Grab	06/30/2011
	T341000	Cyanide (Total)	Once/year	Grab	06/30/2011
	T371000	Methylene Chloride	Once/year	Grab	06/30/2011
	T397000	Toluene	Once/year	Grab	06/30/2011
	T430000	Acetone	Once/year	Grab	06/30/2011
	T435000	Xylene	Once/year	Grab	06/30/2011
	T437000	4-Methyl-2-Pentanone	Once/year	Grab	06/30/2011
	T438000	Isobutyraldehyde	Once/year	Grab	06/30/2011
	T439000	n-Amyl Acetate	Once/year	Grab	06/30/2011
	T440000	n-Butyl Acetate	Once/year	Grab	06/30/2011
	T441000	Ethyl Acetate	Once/year	Grab	06/30/2011

Account No Entered **2112059600**

SPN	PREMISE ADDRESS		CITY	ST	ZIP	
	T442000	Isopropyl Acetate	Once/year	Grab		06/30/2011
	T443000	Methyl Formate	Once/year	Grab		06/30/2011
	T445000	Isopropyl Ether	Once/year	Grab		06/30/2011
	T446000	Tetrahydrofuran	Once/year	Grab		06/30/2011
	T447000	n-Hexane	Once/year	Grab		06/30/2011
	T448000	n-Heptane	Once/year	Grab		06/30/2011
	T449000	Diethylamine	Once/year	Grab		06/30/2011
	T550000	Triethylamine	Once/year	Grab		06/30/2011

938 Project Code: IM = IPD - Company - MSD

Pollutant Group	Poll Code	Pollutant Description	Frequency	Sample Type	End Date
	T371000	Methylene Chloride	Once/year	Grab	06/30/2011
	T430000	Acetone	Once/year	Grab	06/30/2011
	T439000	n-Amyl Acetate	Once/year	Grab	06/30/2011
	T441000	Ethyl Acetate	Once/year	Grab	06/30/2011
	T442000	Isopropyl Acetate	Once/year	Grab	06/30/2011

Covidien - Mallinckrodt
St. Louis Plant
MSD Permit No. 2112059600 - 3

2010 List of Solvents, Acids and Bases On Site	
1-BROMO-2-METHYLPROPANE	HYDRIODIC ACID, SOLN
1-HYDROXYBENZOTRIAZOLE HYDRATE	HYDROBROMIC ACID, 47-49%
2-METHOXYETHYILAMINE, 99+%	HYDROCHLORIC ACID (MURIATIC ACID)
3 AMINO-1,2 PROPANE DIOL	HYDROGEN CHLORIDE
4,4-DIPHENYL-2-CYCLOHEXEN-1-ONE	HYDROGEN FLUORIDE
4-BROMO-2,2-DIPHENYLBUTYRONITRILE	HYDROGEN PEROXIDE (20 to 60%)
4-PHENYL-PIPERIDINECARBOXYLIC ACID	ISOBUTYL ALCOHOL
ACETIC ACID 90% (FF)	ISOPROPYL ALCOHOL (90 - 100%)
ACETIC ACID GLACIAL	LIME HYDRATED
ACETIC ANHYDRIDE	LUBRICATING OILS
ACETONE	MALIC ACID
ACETONITRILE	MALONIC ACID
ALLYL BROMIDE	MARLOTHERM
ALPHA-PHENYL-ALPHA-2-PYRIDYL ACETONITRILE	METHANE SULFONIC ACID 70%
AMMONIUM HYDROXIDE (10 - 35% NH...)	METHYL ALCOHOL
AMYL ALCOHOL	METHYL BROMIDE
ANHYDROUS AMMONIA	METHYL ISOBUTYL KETONE
ANHYDROUS CITRIC ACID	METHYL VINYL KETONE
ANILINE	METHYLAMINE SOLN
ASCORBIC ACID	MONOMETHYLAMINE
BENZOPHENONE	N, N-DIMETHYLFORMAMIDE
BROMINE	N,N-DIISOPROPYLETHYLAMINE
BUTYL ALCOHOL, NORMAL	NITRIC ACID
CAUSTIC SODA LIQUID (ALL GRADES)	N-PROPYL ALCOHOL
CHLORINE LIQUID BULK FF	OXALIC ACID
CHLOROACETYL CHLORIDE	PARAFORMALDEHYDE
CHLOROBENZENE	PHOSPHORIC ACID
CHLOROFORM	PHOSPHORUS TRICHLORIDE
CITRIC ACID	PIPERIDINE
CYCLOBUTANE CARBONYL ACID CHLORIDE	POTASSIUM HYDROXIDE
CYCLOHEXANE	POTASSIUM T-BUTOXIDE
CYCLOHEXANONE	PROPIONIC ANHYDRIDE
CYCLOPROPYLMETHYL BROMIDE	PROPIONYL CHLORIDE, 98%
DICHLOROMETHANE	PROPYL ACETATE
DIESEL FUEL	PYRIDINE
DIETHYLENETRIAMINEPENTAACETIC ACID 98%	SODIUM ETHYLATE
DIMETHYL SULFOXIDE ACS REAGENT	SODIUM HYDROXIDE SOLNS (>10% NaOH)
DIMETHYLACETAMIDE (DMAC)	SODIUM HYPOCHLORITE SOLUTION A.R.
DIMETHYLAMINOISOPROPYL CHLORIDE	SODIUM PERIODATE
DIPHENYLACETONITRILE	SULFURIC ACID, 52 - 100 %
DL-MANDELIC ACID	SULFUROUS ACID
ETHANOL (DENATURED)	SYLTHERM
ETHYL ACETATE	TARTARIC ACID
ETHYL BROMIDE	T-BUTYLBROMOACETATE
ETHYL CHLOROFORMATE	TERT-BUTYL METHYL ETHER
ETHYL ETHER	TETRAHYDROFURAN
ETHYLENE CHLOROHYDRIN	TETRA-N-BUTYLAMMONIUM BROMIDE
ETHYLENE GLYCOL	THIONYL CHLORIDE
FORMIC ACID	TOLUENE
GASOLINE	TRIETHYLAMINE
HEPTANE	TRIFLUOROACETIC ACID
HEXANES	TRIMETHYL ORTHOFORMATE
	TRIMETHYL PHENYL AMMONIUM CHLORIDE
	XYLENES

Mallinckrodt, Inc. 21120596-00

12.January.2009

Metropolitan St. Louis Sewer District

Division of Environmental Compliance
10 East Grand Avenue
St. Louis, MO 63147-2913
Phone: 314.768.6200 www.stlmsd.com

November 19, 2010

Lisa Meyer
MALLINCKRODT
3600 North Second St.
St. Louis, MO 63147

Dear Ms. Meyer:

We have reviewed your application dated November 17, 2010 requesting approval to discharge 7,200 gallons of wastewater to the Metropolitan St. Louis Sewer District for treatment. This wastewater consists of six unusable batches of Ioversol - water solution from Building 504 of the Mallinckrodt facility located at 3600 North Second Street, St. Louis, Missouri. Information provided on the application indicates the Ioversol is a contrast imaging media, and that the unusable batches will be discharged through sampling point 010. In a telephone conversation with you on November 18, 2010, you indicated a representative sample of each of the six batches was submitted for laboratory analysis; as a result, the laboratory analytical results from each batch were averaged to determine average representative concentrations for the wastewater in question.

Based on the information you provided, this wastewater meets MSD Ordinance 12559 standards and is approved for discharge into a sanitary or combined sewer on site. Due to the elevated average concentration of chemical oxygen demand (COD) in the wastewater in question, the discharge is limited to 600 gallons per hour. This approval is valid for 30 days from the date of this letter.

You must be certain the waste is discharged into a sanitary or combined sewer inlet only. This letter does not authorize any discharge to a separate storm sewer, or to any watercourse, as any such discharge would be in violation of state and federal laws. **Please notify me at the number below when the discharge is to commence, and please ensure the onsite personnel discharging the wastewater in question are provided with a copy of this letter.**

For billing purposes, you must confirm the volume of this wastewater discharged to us, in writing. This report is due no later than 28 days after the discharge event. Please refer to this letter and include the date of the discharge when providing that figure. You will be billed by invoice at the billing rate in effect at the time of discharge. The current rates, contained in MSD Ordinance 13021 are $298.36 per ton for chemical oxygen demand (COD) over 600 mg/L and $222.62 per ton for total suspended solids (TSS) over 300 mg/L. Using the average COD and TSS concentrations calculated from the laboratory analytical report submitted with the application, and the proposed discharge volume provided in your application, it is estimated that you will be discharging just under nine tons of COD over 600 mg/L (our quantitative estimate is 8.7 tons COD times $298.36.), and less than one ton of TSS over 300 mg/L (our quantitative estimate is 0.08 tons TSS times $222.62). Please do not pay this amount until you receive our invoice.

This discharge has been approved based upon the information and sample analysis you provided, and is subject to the conditions stated above. This approval may be revoked by the District at any time if any of the information is found to be incorrect, or if the conditions of this approval are violated. Also, if the discharge causes any operational or maintenance problem within the District's collection or treatment system, or results in violations of any conditions of the District's NPDES permit, Mallinckrodt will be considered responsible for damages.

If you have any questions, please call me at (314) 436-8755.

Sincerely,
METROPOLITAN ST. LOUIS SEWER DISTRICT

for Steve Grace
Environmental Assistant Engineer

bv

pc: Brian Gibson
Doug Mendoza

File: IU, MALLINCKRODT INC [2112059600]

C1A

SD EVALUATION CHECKLIST - ON SITE

APPLICATION INFORMATION

Source Name: Mallinckrodt, Inc. Evaluated by: SMG

Premise Address: 3600 S. 2nd St. Date: 11/19/10

Send approval letter to applicant

Application Dated: 11/17/10 Received: 11/17/10 All Requested Info. Received: 11/18/10

SOURCE FILING/DESCRIPTION

1 - Source in PIMS? (Y) / N

2 - If No, on IU Cross-Ref list? * Y / N

3 - If No, MSD Account # from E-CIS? Y / N

4 - If none, on "Source" list (pre-IMS)? ** Y / N

5 - If No, assigned SOUR# from PIMS.

* o:\costrecovery\cross reference xls file

** o:\costrecovery\sourlist xls file

SOURCE TYPE (circle): (IU) / Dead IU / SD

INDUSTRY ID: 21120596-00

Sample Point: No. Assigned: 845 Description: Iversol/water contrast imaging media solution

Normal WW flow from premise? N/A _____ ccf/month, 2,992,101 GPD, _____ GPH. from SP010

REGULATORY STATUS

Is waste a Hazardous Waste? (N) / Y

Categorical standards apply? (N) / Y

Contain PCB/ asbestos/ radioactive/ dioxin/ used oil? (N) Y

Regulatory Agency Oversight? (N) / Y

DISCHARGE CONSIDERATIONS At MSD's connection:

Ordinance Limits (12559, p32) exceeded? (N) / Y

Ordinance other limits exceeded (dye, flash pt <140F, temp >140F, obstruction, nuisance foaming/odor, corrosion causing): (N) / Y

Water Quality Standard exceeded? (N) / Y

Fumes in sewer exceed PEL/TLV limits? (N) / Y

Vapors in sewer exceed 10% of LEL? (N) / Y

RECOMMENDATION: (APPROVE) / DENY (cc WWTP Mgr for timed discharge)

APPROVAL CONDITIONS:

Timed Discharge (COD/BOD/WQ/foam): N / Y Limit = 600 gal/hour

Require Treatment before Discharge? (N) / Y

Laboratory analysis fee due? (N) / Y $_____

SMR required? (N) / Y Frequency/analysis: _____

SMR log: (N/A) / Remediation.xls / Nonremediation.xls

Volume Billing applies (water unmetered or credited)? (N) / Y

Bill High Strength? N / (Y) Yes, If use >60,000 gal/month water ✓ and, > norm WW strgth

Surcharge calculation attached: N/A / N / (Y)

Expiration log updated: (N/A) / N / Y

O:\CostRecovery\Special Discharge\C1a.Checklist.doc

Batch #	Cd	Cr	Cu	Fe	Pb	Ni	Zn	COD	TSS	pH
1	0.040	0.238	0.200	0.832	0.800	0.674	0.064	303,000	1,070	4.56
2	0.040	0.200	0.200	0.492	0.800	0.200	0.054	154,000	960	7.39
3	0.040	0.220	0.200	0.542	0.800	0.658	0.094	296,000	801	4.72
4	0.040	0.328	0.200	0.744	0.800	0.900	0.090	288,000	1,160	4.71
5	0.040	0.662	0.200	1.790	0.800	1.630	0.100	500,000	2,140	5.25
6	0.040	0.190	0.200	0.270	0.800	0.488	0.070	191,000	12,200	7.14
Rep. Conc.	**0.040**	**0.306**	**0.200**	**0.778**	**0.800**	**0.758**	**0.079**	**288,667**	**3,055**	**5.63**

On-Site Special Discharge High Strength Flow Rate and Surcharge Calculator

1 GENERAL INFORMATION:

Date: 11/18/10
Calculated by: Steve Grace
Source name: Mallinckrodt Inc.
Waste material: Ioversol/water contrast imaging media solution
Discharge volume: 7,200 gallons

2 STRENGTH INFORMATION:

Sample BOD =	0	mg/l =	0	lbs BOD to be discharged
Sample COD =	288,667	mg/l =	17334	lbs COD to be discharged
Sample TSS =	3,055	mg/l =	for surcharge calculation only	

3 PLANT DATA: 2010

Treatment area: Bissell

	Flow (MGD)	BOD (mg/L)	COD (mg/L)	BOD (lb/hr)	COD (lb/hr)	Max Loading = 10% BOD (lb/hr)	COD (lb/hr)
Bissell	**140**	**146**	**292**	**7,113**	**14,227**	**711**	**1,423**
Coldwater	26	188	377	1,704	3,408	170	341
Fenton	5	388	776	679	1,357	68	136
Grand Glaize	16	129	405	708	2,218	71	222
Lemay	131	78	210	3,531	9,584	353	958
Lower Meramec	13	124	409	543	1,785	54	179
Missouri River	27	280	559	2,671	5,341	267	534

4 MINIMUM REQUIRED FLOW RATE:

	BOD (hours	BOD (gpm)	COD (hours)	COD (gpm)
Bissell	**0.00**	**0**	**12.18**	**10**
Coldwater	0.00	0	50.86	2
Fenton	0.00	0	127.71	1
Grand Glaize	0.00	0	78.17	2
Lemay	0.00	0	18.09	7
Lower Meramec	0.00	0	97.11	1
Missouri River	0.00	0	32.45	4

5 SURCHARGE AND VOLUME BILLING

Is volume subject to billing? no (yes/no)
Ratio of BOD/COD = 0.00

(Sample BOD) - 300 = 0 mg/l subject to surcharge
(sample COD) - 600 = 288067 mg/l subject to surcharge
(sample TSS) - 300 = 2755 mg/l subject to surcharge

If BOD/COD ratio <= 0.35, the following calculations use the COD value. Otherwise they use the BOD value

Current rates under Ordinance: 13021

Volume = $ 2.02 /CcF
BOD = $ 596.72 /ton
COD = $ 298.36 /ton
TSS = $ 222.62 /ton

Flow charge = $ - based on volume = 9.6 CcF
BOD surcharge = $ -
COD surcharge = $2,581.19
TSS surcharge = $ 18.42
Total discharge charge = $2,599.61
Customer charge = $2,599.61 DEC charges special discharge customers for total charges > $20.00
Approximate charge/gallon = $ 0.36

Comments

require volume report for billing purposes. Smg

Metropolitan St. Louis Sewer District

Phone No. (314) 436-8710
Division of Environmental Compliance, 10 East Grand Avenue, St. Louis, Missouri 63147 Fax No. (314) 436-8766

APPLICATION FOR SPECIAL DISCHARGE APPROVAL

I. WASTEWATER SOURCE IDENTIFICATION:

Site Name: Mallinckrodt
Premise Address: 3600 North 2nd St.
City: St. Louis State: MO Zip: 63147
Owner: Mallinckrodt
Contact Person: Lisa Meyer
Title: Senior HSE Engineer
Phone: 314.654.3374 Fax: 314.654.1251

II. APPLICANT (mailing information):

Applicant Name: Lisa Meyer
Title: Senior HSE Engineer
Company Name: Mallinckrodt
Mailing Address: 3600 North 2nd St.
City: St. Louis State: MO Zip: 63147
Phone: 314.654.3374 Fax: 314.654.1251

III. A. MATERIAL TO BE DISCHARGED (check all applicable boxes):

1. Wastewater description/location: Bad batches of Imaging Contrast Media from Building 504
2. Process/activity generating wastewater: (6 bad batches (1200 gallons each) of Contrast media (Iversol) from Building 504.
   Each of the 6 batches were sampled. Analytical attached for each batch 1-6.
3. Physical and chemical composition: List all constituents, and known or potentially present regulated contaminants below.
   ☐ See separate listing enclosed, and/or ☑ See analytical results enclosed, and/or ☑ Material Safety Data Sheet enclosed.

DESCRIPTION	RANGE	UNIT
Iversol	30	%
Water	70	%

DESCRIPTION *(continued)*	RANGE	UNIT

4. Is this wastewater from a process subject to EPA's categorical standards in 40 CFR Subchapter N? ☐ Yes ☑ No
   a. If yes, the applicable standards are in: 40 CFR Part _____, Subpart _____ ☐ Existing source ☐ New source
5. Does this wastewater contain polychlorinated biphenyls, asbestos or radioactive material? ☐ Yes ☑ No
   a. If yes, describe: _____
6. Representative sample: ☐ Laboratory results attached, and/or ☐ Sample provided (1/2 gallon minimum, clear container)
   a. Sample collection point/location: _____ Collection method: _____
   b. Sampler's name/Co.: _____ Sample date/time: _____
   c. Attach chain of custody as available
7. Discharge will occur over the following time period: ☑ < 30 days ☐ ≥ Two years ☐ Other: _____
   a. Expected total volume of wastewater to be discharged over the time period above: _____ Gallons
   b. Proposed discharge volume: 7200 Gallons, at a frequency of: ☑ One time ☐ Daily ☐ Weekly ☐ Monthly ☐ Once/three months ☐ Once/six months ☐ Other: _____
8. Pretreatment of wastewater prior to discharge: ☐ None ☑ Yes, describe: pH neutralization at the main outfall SP010
   a. If yes, attach site plan, pretreatment system schematic, and design specifications.
9. Wastewater from a remediation project under: ☐ Superfund/CERCLA ☐ RCRA ☐ Voluntary program ☐ UST ☑ Not applicable
   a. If from a remediation project, briefly describe the past and present utilization of the property: _____

III.B. MATERIAL FROM UNDERGROUND STORAGE TANK SOURCE

☑ **Not applicable (go to Section IV)**

Please answer the following questions if you are requesting to discharge wastewater associated with an underground storage tank system.

1. a. Wastewater from: ☐ Inside UST(s) ☐ UST system pit ☐ Excavation outside UST system pit ☐ Monitoring well ☐ Groundwater remediation system

   b. UST project involves wastewater from: ☐ UST(s) closed in place ☐ UST(s) removed ☐ Remediation ☐ Upgrade ☐ Maintenance activities ☐ Well monitoring ☐ Other, explain: _____

   c. If wastewater is from a closure project, how long has UST(s) been out of service: _____ years

2. a. State assigned UST site identification number: _____ ☐ Not applicable

   b. Number of USTs affected: _____ ☐ Unknown

   c. For the UST(s) involved, their state identification number(s): _____ ☐ Not applicable

   d. Service Station Identification Number, as applicable: _____

3. Tank contents/former contents: ☐ Gasoline ☐ #2 diesel ☐ Used oil ☐ Unknown ☐ Other: _____

IV. DISCHARGE LOCATION

1. ☑ On-site. Describe proposed point of entry to sewer and the discharge rate (must be a sanitary or combined sewer): _____
   plant sewer to SP010 _____ Note: Range of discharge must not surcharge sewer line.

2. ☐ Haul to MSD Bissell Point Hauled Waste Receiving Station at 10 E. Grand, St. Louis, MO.

   a. Transporters Name: _____ and MSD Hauler ID Number: _____

   b. Hazardous Waste Certification:

   For wastewater which is hauled to MSD's Bissell Point Hauled Waste Receiving Station, I hereby certify that to the best of my knowledge and belief, the above hauled waste is not classified as a RCRA "hazardous waste" as defined by the MDNR in 10 CSR 25 or USEPA in 40 CFR Part 261.

   Applicant Name (print): _____

   Signature: _____ **Date:** _____

ADDITIONAL INFORMATION:

_____

_____

_____

_____

_____

_____

V. APPLICANT SIGNATURE AND CERTIFICATION

This application must be signed by the applicant: either the source contact, or a contractor or agent directly responsible for site activities.

I hereby certify that I am directly responsible for activities at the site regarding the wastewater to be discharged, and to the best of my knowledge and belief, based on appropriate inquiry, the information in this application is true, complete, and accurate. The samples or analyses submitted are representative of the materials to be discharged. If granted approval to discharge, I agree to abide by the MSD Ordinances, and all applicable federal, state and local regulations. I agree to pay the costs of any pre-approval analyses performed by MSD and to pay any applicable disposal charges for the volume and strength of the wastes discharged.

Applicant Name (print): Lisa Meyer

Signature: Lisa Meyer **Date:** 11/17/10

FOR MSD USE ONLY:

File Name: _____ ID No. _____ Sample Point No. _____

TEKLAB, INC.

5445 HORSESHOE LAKE ROAD
COLLINSVILLE, ILLINOIS 62234

ENVIRONMENTAL TESTING LABORATORY

TEL: 618-344-1004
FAX: 618-344-1005

LABORATORY RESULTS

Client: Mallinckrodt Inc.
WorkOrder: 10110331
Lab ID: 10110331-001
Report Date: 12-Nov-10

Client Project: Loversol
Client Sample ID: 13327
Collection Date: 11/4/2010 2:00:00 PM
Matrix: AQUEOUS

Analyses	Certification	RL	Qual	Result	Units	DF	Date Analyzed	Analyst
EPA 600 4.1.4, 200.7R4.4, METALS BY ICP (TOTAL)								
Cadmium	NELAP	0.0400		< 0.0400	mg/L	20	11/12/2010 9:49:30 AM	JMW
Chromium	NELAP	0.200		0.238	mg/L	20	11/12/2010 9:49:30 AM	JMW
Copper	NELAP	0.200		< 0.200	mg/L	20	11/12/2010 9:49:30 AM	JMW
Iron	NELAP	0.400		0.832	mg/L	20	11/12/2010 9:49:30 AM	JMW
Lead	NELAP	0.800		< 0.800	mg/L	20	11/12/2010 9:49:30 AM	JMW
Nickel	NELAP	0.200		0.674	mg/L	20	11/12/2010 9:49:30 AM	JMW
Zinc	NELAP	0.200	J	0.064	mg/L	20	11/12/2010 9:49:30 AM	JMW
EPA 600 410.4								
Chemical Oxygen Demand	NELAP	20000		303000	mg/L	4	11/11/2010 10:00:00 AM	BSJ
EPA 600 624, VOLATILE ORGANIC COMPOUNDS BY GC/MS								
1,1,1-Trichloroethane	NELAP	125		ND	µg/L	25	11/10/2010 5:11:00 PM	CCF
1,1,2,2-Tetrachloroethane	NELAP	125		ND	µg/L	25	11/10/2010 5:11:00 PM	CCF
1,1,2-Trichloroethane	NELAP	125		ND	µg/L	25	11/10/2010 5:11:00 PM	CCF
1,1-Dichloroethane	NELAP	125		ND	µg/L	25	11/10/2010 5:11:00 PM	CCF
1,1-Dichloroethene	NELAP	125		ND	µg/L	25	11/10/2010 5:11:00 PM	CCF
1,2-Dichlorobenzene	NELAP	125		ND	µg/L	25	11/10/2010 5:11:00 PM	CCF
1,2-Dichloroethane	NELAP	125		ND	µg/L	25	11/10/2010 5:11:00 PM	CCF
1,2-Dichloropropane	NELAP	125		ND	µg/L	25	11/10/2010 5:11:00 PM	CCF
1,3-Dichlorobenzene	NELAP	125		ND	µg/L	25	11/10/2010 5:11:00 PM	CCF
1,4-Dichlorobenzene	NELAP	125		ND	µg/L	25	11/10/2010 5:11:00 PM	CCF
2-Chloroethyl vinyl ether	NELAP	500		ND	µg/L	25	11/10/2010 5:11:00 PM	CCF
Acrolein	NELAP	2500		ND	µg/L	25	11/10/2010 5:11:00 PM	CCF
Acrylonitrile	NELAP	125		ND	µg/L	25	11/10/2010 5:11:00 PM	CCF
Benzene	NELAP	50.0		ND	µg/L	25	11/10/2010 5:11:00 PM	CCF
Bromodichloromethane	NELAP	125		ND	µg/L	25	11/10/2010 5:11:00 PM	CCF
Bromoform	NELAP	125		ND	µg/L	25	11/10/2010 5:11:00 PM	CCF
Bromomethane	NELAP	250		ND	µg/L	25	11/10/2010 5:11:00 PM	CCF
Carbon tetrachloride	NELAP	125		ND	µg/L	25	11/10/2010 5:11:00 PM	CCF
Chlorobenzene	NELAP	125		ND	µg/L	25	11/10/2010 5:11:00 PM	CCF
Chloroethane	NELAP	250		ND	µg/L	25	11/10/2010 5:11:00 PM	CCF
Chloroform	NELAP	125		ND	µg/L	25	11/10/2010 5:11:00 PM	CCF
Chloromethane	NELAP	250		ND	µg/L	25	11/10/2010 5:11:00 PM	CCF
cis-1,3-Dichloropropene	NELAP	125		ND	µg/L	25	11/10/2010 5:11:00 PM	CCF
Dibromochloromethane	NELAP	125		ND	µg/L	25	11/10/2010 5:11:00 PM	CCF
Ethylbenzene	NELAP	125		ND	µg/L	25	11/10/2010 5:11:00 PM	CCF
Methylene chloride	NELAP	125		ND	µg/L	25	11/10/2010 5:11:00 PM	CCF
Tetrachloroethene	NELAP	125		ND	µg/L	25	11/10/2010 5:11:00 PM	CCF
Toluene	NELAP	50.0		ND	µg/L	25	11/10/2010 5:11:00 PM	CCF

TEKLAB, INC.

5445 HORSESHOE LAKE ROAD
COLLINSVILLE, ILLINOIS 62234

ENVIRONMENTAL TESTING LABORATORY

TEL: 618-344-1004
FAX: 618-344-1005

LABORATORY RESULTS

Client: Mallinckrodt Inc.
WorkOrder: 10110331
Lab ID: 10110331-001
Report Date: 12-Nov-10

Client Project: Loversol
Client Sample ID: 13327
Collection Date: 11/4/2010 2:00:00 PM
Matrix: AQUEOUS

Analyses	Certification	RL	Qual	Result	Units	DF	Date Analyzed	Analyst
EPA 600 624, VOLATILE ORGANIC COMPOUNDS BY GC/MS								
trans-1,2-Dichloroethene	NELAP	125		ND	µg/L	25	11/10/2010 5:11:00 PM	CCF
trans-1,3-Dichloropropene	NELAP	125		ND	µg/L	25	11/10/2010 5:11:00 PM	CCF
Trichloroethene	NELAP	125		ND	µg/L	25	11/10/2010 5:11:00 PM	CCF
Vinyl chloride	NELAP	50.0		ND	µg/L	25	11/10/2010 5:11:00 PM	CCF
Xylenes, Total	NELAP	125		ND	µg/L	25	11/10/2010 5:11:00 PM	CCF
Surr: 1,2-Dichloroethane-d4		74.7-129		99.2	%REC	25	11/10/2010 5:11:00 PM	CCF
Surr: 4-Bromofluorobenzene		86-119		107.1	%REC	25	11/10/2010 5:11:00 PM	CCF
Surr: Dibromofluoromethane		81.7-123		107.4	%REC	25	11/10/2010 5:11:00 PM	CCF
Surr: Toluene-d8		84.3-114		94.7	%REC	25	11/10/2010 5:11:00 PM	CCF
STANDARD METHOD 18TH ED. 4500-H B, LABORATORY ANALYZED								
Lab pH	NELAP	1.00		4.56		1	11/10/2010 12:56:00 PM	CS
STANDARD METHODS 18TH ED. 2540 D								
Total Suspended Solids	NELAP	6		1070	mg/L	1	11/8/2010 9:00:00 AM	RS

Sample Narrative

EPA 600 4.1.4, 200.7R4.4, Metals by ICP (Total)

Elevated reporting limit due to high levels of target and/or non-target analytes.

EPA 600 624, Volatile Organic Compounds by GC/MS

Elevated reporting limit due to sample composition.

TEKLAB, INC.

5445 HORSESHOE LAKE ROAD
COLLINSVILLE, ILLINOIS 62234

ENVIRONMENTAL TESTING LABORATORY

TEL: 618-344-1004
FAX: 618-344-1005

LABORATORY RESULTS

Client: Mallinckrodt Inc.
WorkOrder: 10110331
Lab ID: 10110331-002
Report Date: 12-Nov-10

Client Project: Loversol
Client Sample ID: 2 4225
Collection Date: 11/4/2010 2:00:00 PM
Matrix: AQUEOUS

Analyses	Certification	RL	Qual	Result	Units	DF	Date Analyzed	Analyst
EPA 600 4.1.4, 200.7R4.4, METALS BY ICP (TOTAL)								
Cadmium	NELAP	0.0400		< 0.0400	mg/L	20	11/12/2010 9:55:02 AM	JMW
Chromium	NELAP	0.200		< 0.200	mg/L	20	11/12/2010 9:55:02 AM	JMW
Copper	NELAP	0.200		< 0.200	mg/L	20	11/12/2010 9:55:02 AM	JMW
Iron	NELAP	0.400		0.492	mg/L	20	11/12/2010 9:55:02 AM	JMW
Lead	NELAP	0.800		< 0.800	mg/L	20	11/12/2010 9:55:02 AM	JMW
Nickel	NELAP	0.200		< 0.200	mg/L	20	11/12/2010 9:55:02 AM	JMW
Zinc	NELAP	0.200	J	0.054	mg/L	20	11/12/2010 9:55:02 AM	JMW
EPA 600 410.4								
Chemical Oxygen Demand	NELAP	10000		154000	mg/L	2	11/11/2010 10:00:00 AM	BSJ
EPA 600 624, VOLATILE ORGANIC COMPOUNDS BY GC/MS								
1,1,1-Trichloroethane	NELAP	125		ND	µg/L	25	11/10/2010 5:40:00 PM	CCF
1,1,2,2-Tetrachloroethane	NELAP	125		ND	µg/L	25	11/10/2010 5:40:00 PM	CCF
1,1,2-Trichloroethane	NELAP	125		ND	µg/L	25	11/10/2010 5:40:00 PM	CCF
1,1-Dichloroethane	NELAP	125		ND	µg/L	25	11/10/2010 5:40:00 PM	CCF
1,1-Dichloroethene	NELAP	125		ND	µg/L	25	11/10/2010 5:40:00 PM	CCF
1,2-Dichlorobenzene	NELAP	125		ND	µg/L	25	11/10/2010 5:40:00 PM	CCF
1,2-Dichloroethane	NELAP	125		ND	µg/L	25	11/10/2010 5:40:00 PM	CCF
1,2-Dichloropropane	NELAP	125		ND	µg/L	25	11/10/2010 5:40:00 PM	CCF
1,3-Dichlorobenzene	NELAP	125		ND	µg/L	25	11/10/2010 5:40:00 PM	CCF
1,4-Dichlorobenzene	NELAP	125		ND	µg/L	25	11/10/2010 5:40:00 PM	CCF
2-Chloroethyl vinyl ether	NELAP	500		ND	µg/L	25	11/10/2010 5:40:00 PM	CCF
Acrolein	NELAP	2500		ND	µg/L	25	11/10/2010 5:40:00 PM	CCF
Acrylonitrile	NELAP	125		ND	µg/L	25	11/10/2010 5:40:00 PM	CCF
Benzene	NELAP	50.0		ND	µg/L	25	11/10/2010 5:40:00 PM	CCF
Bromodichloromethane	NELAP	125		ND	µg/L	25	11/10/2010 5:40:00 PM	CCF
Bromoform	NELAP	125		ND	µg/L	25	11/10/2010 5:40:00 PM	CCF
Bromomethane	NELAP	250		ND	µg/L	25	11/10/2010 5:40:00 PM	CCF
Carbon tetrachloride	NELAP	125		ND	µg/L	25	11/10/2010 5:40:00 PM	CCF
Chlorobenzene	NELAP	125		ND	µg/L	25	11/10/2010 5:40:00 PM	CCF
Chloroethane	NELAP	250		ND	µg/L	25	11/10/2010 5:40:00 PM	CCF
Chloroform	NELAP	125		ND	µg/L	25	11/10/2010 5:40:00 PM	CCF
Chloromethane	NELAP	250		ND	µg/L	25	11/10/2010 5:40:00 PM	CCF
cis-1,3-Dichloropropene	NELAP	125		ND	µg/L	25	11/10/2010 5:40:00 PM	CCF
Dibromochloromethane	NELAP	125		ND	µg/L	25	11/10/2010 5:40:00 PM	CCF
Ethylbenzene	NELAP	125		ND	µg/L	25	11/10/2010 5:40:00 PM	CCF
Methylene chloride	NELAP	125		ND	µg/L	25	11/10/2010 5:40:00 PM	CCF
Tetrachloroethene	NELAP	125		ND	µg/L	25	11/10/2010 5:40:00 PM	CCF
Toluene	NELAP	50.0		ND	µg/L	25	11/10/2010 5:40:00 PM	CCF

TEKLAB, INC.

5445 HORSESHOE LAKE ROAD
COLLINSVILLE, ILLINOIS 62234

ENVIRONMENTAL TESTING LABORATORY

TEL: 618-344-1004
FAX: 618-344-1005

LABORATORY RESULTS

Client: Mallinckrodt Inc.
WorkOrder: 10110331
Lab ID: 10110331-002
Report Date: 12-Nov-10

Client Project: Toversol
Client Sample ID: 24225
Collection Date: 11/4/2010 2:00:00 PM
Matrix: AQUEOUS

Analyses	Certification	RL	Qual	Result	Units	DF	Date Analyzed	Analyst
EPA 600 624, VOLATILE ORGANIC COMPOUNDS BY GC/MS								
trans-1,2-Dichloroethene	NELAP	125		**ND**	µg/L	25	11/10/2010 5:40:00 PM	CCF
trans-1,3-Dichloropropene	NELAP	125		**ND**	µg/L	25	11/10/2010 5:40:00 PM	CCF
Trichloroethene	NELAP	125		**ND**	µg/L	25	11/10/2010 5:40:00 PM	CCF
Vinyl chloride	NELAP	50.0		**ND**	µg/L	25	11/10/2010 5:40:00 PM	CCF
Xylenes, Total	NELAP	125		**ND**	µg/L	25	11/10/2010 5:40:00 PM	CCF
Surr: 1,2-Dichloroethane-d4		74.7-129		**97.6**	%REC	25	11/10/2010 5:40:00 PM	CCF
Surr: 4-Bromofluorobenzene		86-119		**105.3**	%REC	25	11/10/2010 5:40:00 PM	CCF
Surr: Dibromofluoromethane		81.7-123		**106.4**	%REC	25	11/10/2010 5:40:00 PM	CCF
Surr: Toluene-d8		84.3-114		**95.8**	%REC	25	11/10/2010 5:40:00 PM	CCF
STANDARD METHOD 18TH ED. 4500-H B, LABORATORY ANALYZED								
Lab pH	NELAP	1.00		**7.39**		1	11/10/2010 12:56:00 PM	CS
STANDARD METHODS 18TH ED. 2540 D								
Total Suspended Solids	NELAP	6		**960**	mg/L	1	11/8/2010 9:00:00 AM	RS

Sample Narrative

EPA 600 4.1.4, 200.7R4.4, Metals by ICP (Total)

Elevated reporting limit due to high levels of target and/or non-target analytes.

EPA 600 624, Volatile Organic Compounds by GC/MS

Elevated reporting limit due to sample composition.

TEKLAB, INC.

5445 HORSESHOE LAKE ROAD
COLLINSVILLE, ILLINOIS 62234

ENVIRONMENTAL TESTING LABORATORY

TEL: 618-344-1004
FAX: 618-344-1005

LABORATORY RESULTS

Client: Mallinckrodt Inc.
WorkOrder: 10110331
Lab ID: 10110331-003
Report Date: 12-Nov-10

Client Project: Loversol
Client Sample ID: 3 6125
Collection Date: 11/4/2010 2:00:00 PM
Matrix: AQUEOUS

Analyses	Certification	RL	Qual	Result	Units	DF	Date Analyzed	Analyst
EPA 600 4.1.4, 200.7R4.4, METALS BY ICP (TOTAL)								
Cadmium	NELAP	0.0400		< 0.0400	mg/L	20	11/12/2010 10:00:33 AM	JMW
Chromium	NELAP	0.200		0.220	mg/L	20	11/12/2010 10:00:33 AM	JMW
Copper	NELAP	0.200		< 0.200	mg/L	20	11/12/2010 10:00:33 AM	JMW
Iron	NELAP	0.400		0.542	mg/L	20	11/12/2010 10:00:33 AM	JMW
Lead	NELAP	0.800		< 0.800	mg/L	20	11/12/2010 10:00:33 AM	JMW
Nickel	NELAP	0.200		0.658	mg/L	20	11/12/2010 10:00:33 AM	JMW
Zinc	NELAP	0.200	J	0.094	mg/L	20	11/12/2010 10:00:33 AM	JMW
EPA 600 410.4								
Chemical Oxygen Demand	NELAP	20000		296000	mg/L	4	11/11/2010 10:00:00 AM	BSJ
EPA 600 624, VOLATILE ORGANIC COMPOUNDS BY GC/MS								
1,1,1-Trichloroethane	NELAP	125		ND	µg/L	25	11/10/2010 6:09:00 PM	CCF
1,1,2,2-Tetrachloroethane	NELAP	125		ND	µg/L	25	11/10/2010 6:09:00 PM	CCF
1,1,2-Trichloroethane	NELAP	125		ND	µg/L	25	11/10/2010 6:09:00 PM	CCF
1,1-Dichloroethane	NELAP	125		ND	µg/L	25	11/10/2010 6:09:00 PM	CCF
1,1-Dichloroethene	NELAP	125		ND	µg/L	25	11/10/2010 6:09:00 PM	CCF
1,2-Dichlorobenzene	NELAP	125		ND	µg/L	25	11/10/2010 6:09:00 PM	CCF
1,2-Dichloroethane	NELAP	125		ND	µg/L	25	11/10/2010 6:09:00 PM	CCF
1,2-Dichloropropane	NELAP	125		ND	µg/L	25	11/10/2010 6:09:00 PM	CCF
1,3-Dichlorobenzene	NELAP	125		ND	µg/L	25	11/10/2010 6:09:00 PM	CCF
1,4-Dichlorobenzene	NELAP	125		ND	µg/L	25	11/10/2010 6:09:00 PM	CCF
2-Chloroethyl vinyl ether	NELAP	500		ND	µg/L	25	11/10/2010 6:09:00 PM	CCF
Acrolein	NELAP	2500		ND	µg/L	25	11/10/2010 6:09:00 PM	CCF
Acrylonitrile	NELAP	125		ND	µg/L	25	11/10/2010 6:09:00 PM	CCF
Benzene	NELAP	50.0		ND	µg/L	25	11/10/2010 6:09:00 PM	CCF
Bromodichloromethane	NELAP	125		ND	µg/L	25	11/10/2010 6:09:00 PM	CCF
Bromoform	NELAP	125		ND	µg/L	25	11/10/2010 6:09:00 PM	CCF
Bromomethane	NELAP	250		ND	µg/L	25	11/10/2010 6:09:00 PM	CCF
Carbon tetrachloride	NELAP	125		ND	µg/L	25	11/10/2010 6:09:00 PM	CCF
Chlorobenzene	NELAP	125		ND	µg/L	25	11/10/2010 6:09:00 PM	CCF
Chloroethane	NELAP	250		ND	µg/L	25	11/10/2010 6:09:00 PM	CCF
Chloroform	NELAP	125		ND	µg/L	25	11/10/2010 6:09:00 PM	CCF
Chloromethane	NELAP	250		ND	µg/L	25	11/10/2010 6:09:00 PM	CCF
cis-1,3-Dichloropropene	NELAP	125		ND	µg/L	25	11/10/2010 6:09:00 PM	CCF
Dibromochloromethane	NELAP	125		ND	µg/L	25	11/10/2010 6:09:00 PM	CCF
Ethylbenzene	NELAP	125		ND	µg/L	25	11/10/2010 6:09:00 PM	CCF
Methylene chloride	NELAP	125		ND	µg/L	25	11/10/2010 6:09:00 PM	CCF
Tetrachloroethene	NELAP	125		ND	µg/L	25	11/10/2010 6:09:00 PM	CCF
Toluene	NELAP	50.0		ND	µg/L	25	11/10/2010 6:09:00 PM	CCF

TEKLAB, INC.

5445 HORSESHOE LAKE ROAD
COLLINSVILLE, ILLINOIS 62234

ENVIRONMENTAL TESTING LABORATORY

TEL: 618-344-1004
FAX: 618-344-1005

LABORATORY RESULTS

Client: Mallinckrodt Inc.
WorkOrder: 10110331
Lab ID: 10110331-003
Report Date: 12-Nov-10

Client Project: Loversol
Client Sample ID: 36125
Collection Date: 11/4/2010 2:00:00 PM
Matrix: AQUEOUS

Analyses	Certification	RL	Qual	Result	Units	DF	Date Analyzed	Analyst
EPA 600 624, VOLATILE ORGANIC COMPOUNDS BY GC/MS								
trans-1,2-Dichloroethene	NELAP	125		**ND**	µg/L	25	11/10/2010 6:09:00 PM	CCF
trans-1,3-Dichloropropene	NELAP	125		**ND**	µg/L	25	11/10/2010 6:09:00 PM	CCF
Trichloroethene	NELAP	125		**ND**	µg/L	25	11/10/2010 6:09:00 PM	CCF
Vinyl chloride	NELAP	50.0		**ND**	µg/L	25	11/10/2010 6:09:00 PM	CCF
Xylenes, Total	NELAP	125		**ND**	µg/L	25	11/10/2010 6:09:00 PM	CCF
Surr: 1,2-Dichloroethane-d4		74.7-129		**99.3**	%REC	25	11/10/2010 6:09:00 PM	CCF
Surr: 4-Bromofluorobenzene		86-119		**105.2**	%REC	25	11/10/2010 6:09:00 PM	CCF
Surr: Dibromofluoromethane		81.7-123		**108.6**	%REC	25	11/10/2010 6:09:00 PM	CCF
Surr: Toluene-d8		84.3-114		**95.5**	%REC	25	11/10/2010 6:09:00 PM	CCF
STANDARD METHOD 18TH ED. 4500-H B, LABORATORY ANALYZED								
Lab pH	NELAP	1.00		**4.72**		1	11/10/2010 12:56:00 PM	CS
STANDARD METHODS 18TH ED. 2540 D								
Total Suspended Solids	NELAP	6		**801**	mg/L	1	11/8/2010 9:00:00 AM	RS

Sample Narrative

EPA 600 4.1.4, 200.7R4.4, Metals by ICP (Total)

Elevated reporting limit due to high levels of target and/or non-target analytes.

EPA 600 624, Volatile Organic Compounds by GC/MS

Elevated reporting limit due to sample composition.

TEKLAB, INC.

5445 HORSESHOE LAKE ROAD
COLLINSVILLE, ILLINOIS 62234

ENVIRONMENTAL TESTING LABORATORY

TEL: 618-344-1004
FAX: 618-344-1005

LABORATORY RESULTS

Client: Mallinckrodt Inc.
WorkOrder: 10110331
Lab ID: 10110331-004
Report Date: 12-Nov-10

Client Project: Loversol
Client Sample ID: 45189
Collection Date: 11/4/2010 2:00:00 PM
Matrix: AQUEOUS

Analyses	Certification	RL	Qual	Result	Units	DF	Date Analyzed	Analyst
EPA 600 4.1.4, 200.7R4.4, METALS BY ICP (TOTAL)								
Cadmium	NELAP	0.0400		< 0.0400	mg/L	20	11/12/2010 10:06:04 AM	JMW
Chromium	NELAP	0.200		0.328	mg/L	20	11/12/2010 10:06:04 AM	JMW
Copper	NELAP	0.200		< 0.200	mg/L	20	11/12/2010 10:06:04 AM	JMW
Iron	NELAP	0.400		0.744	mg/L	20	11/12/2010 10:06:04 AM	JMW
Lead	NELAP	0.800		< 0.800	mg/L	20	11/12/2010 10:06:04 AM	JMW
Nickel	NELAP	0.200		0.900	mg/L	20	11/12/2010 10:06:04 AM	JMW
Zinc	NELAP	0.200	J	0.090	mg/L	20	11/12/2010 10:06:04 AM	JMW
EPA 600 410.4								
Chemical Oxygen Demand	NELAP	20000		288000	mg/L	4	11/11/2010 10:00:00 AM	BSJ
EPA 600 624, VOLATILE ORGANIC COMPOUNDS BY GC/MS								
1,1,1-Trichloroethane	NELAP	125		ND	µg/L	25	11/10/2010 6:38:00 PM	CCF
1,1,2,2-Tetrachloroethane	NELAP	125		ND	µg/L	25	11/10/2010 6:38:00 PM	CCF
1,1,2-Trichloroethane	NELAP	125		ND	µg/L	25	11/10/2010 6:38:00 PM	CCF
1,1-Dichloroethane	NELAP	125		ND	µg/L	25	11/10/2010 6:38:00 PM	CCF
1,1-Dichloroethene	NELAP	125		ND	µg/L	25	11/10/2010 6:38:00 PM	CCF
1,2-Dichlorobenzene	NELAP	125		ND	µg/L	25	11/10/2010 6:38:00 PM	CCF
1,2-Dichloroethane	NELAP	125		ND	µg/L	25	11/10/2010 6:38:00 PM	CCF
1,2-Dichloropropane	NELAP	125		ND	µg/L	25	11/10/2010 6:38:00 PM	CCF
1,3-Dichlorobenzene	NELAP	125		ND	µg/L	25	11/10/2010 6:38:00 PM	CCF
1,4-Dichlorobenzene	NELAP	125		ND	µg/L	25	11/10/2010 6:38:00 PM	CCF
2-Chloroethyl vinyl ether	NELAP	500		ND	µg/L	25	11/10/2010 6:38:00 PM	CCF
Acrolein	NELAP	2500		ND	µg/L	25	11/10/2010 6:38:00 PM	CCF
Acrylonitrile	NELAP	125		ND	µg/L	25	11/10/2010 6:38:00 PM	CCF
Benzene	NELAP	50.0		ND	µg/L	25	11/10/2010 6:38:00 PM	CCF
Bromodichloromethane	NELAP	125		ND	µg/L	25	11/10/2010 6:38:00 PM	CCF
Bromoform	NELAP	125		ND	µg/L	25	11/10/2010 6:38:00 PM	CCF
Bromomethane	NELAP	250		ND	µg/L	25	11/10/2010 6:38:00 PM	CCF
Carbon tetrachloride	NELAP	125		ND	µg/L	25	11/10/2010 6:38:00 PM	CCF
Chlorobenzene	NELAP	125		ND	µg/L	25	11/10/2010 6:38:00 PM	CCF
Chloroethane	NELAP	250		ND	µg/L	25	11/10/2010 6:38:00 PM	CCF
Chloroform	NELAP	125		ND	µg/L	25	11/10/2010 6:38:00 PM	CCF
Chloromethane	NELAP	250		ND	µg/L	25	11/10/2010 6:38:00 PM	CCF
cis-1,3-Dichloropropene	NELAP	125		ND	µg/L	25	11/10/2010 6:38:00 PM	CCF
Dibromochloromethane	NELAP	125		ND	µg/L	25	11/10/2010 6:38:00 PM	CCF
Ethylbenzene	NELAP	125		ND	µg/L	25	11/10/2010 6:38:00 PM	CCF
Methylene chloride	NELAP	125		ND	µg/L	25	11/10/2010 6:38:00 PM	CCF
Tetrachloroethene	NELAP	125		ND	µg/L	25	11/10/2010 6:38:00 PM	CCF
Toluene	NELAP	50.0		ND	µg/L	25	11/10/2010 6:38:00 PM	CCF

TEKLAB, INC.

5445 HORSESHOE LAKE ROAD
COLLINSVILLE, ILLINOIS 62234

ENVIRONMENTAL TESTING LABORATORY

TEL: 618-344-1004
FAX: 618-344-1005

LABORATORY RESULTS

Client: Mallinckrodt Inc.
WorkOrder: 10110331
Lab ID: 10110331-004
Report Date: 12-Nov-10

Client Project: Loversol
Client Sample ID: 4 5189
Collection Date: 11/4/2010 2:00:00 PM
Matrix: AQUEOUS

Analyses	Certification	RL	Qual	Result	Units	DF	Date Analyzed	Analyst
EPA 600 624, VOLATILE ORGANIC COMPOUNDS BY GC/MS								
trans-1,2-Dichloroethene	NELAP	125		**ND**	µg/L	25	11/10/2010 6:38:00 PM	CCF
trans-1,3-Dichloropropene	NELAP	125		**ND**	µg/L	25	11/10/2010 6:38:00 PM	CCF
Trichloroethene	NELAP	125		**ND**	µg/L	25	11/10/2010 6:38:00 PM	CCF
Vinyl chloride	NELAP	50.0		**ND**	µg/L	25	11/10/2010 6:38:00 PM	CCF
Xylenes, Total	NELAP	125		**ND**	µg/L	25	11/10/2010 6:38:00 PM	CCF
Surr: 1,2-Dichloroethane-d4		74.7-129		**99.3**	%REC	25	11/10/2010 6:38:00 PM	CCF
Surr: 4-Bromofluorobenzene		86-119		**105.5**	%REC	25	11/10/2010 6:38:00 PM	CCF
Surr: Dibromofluoromethane		81.7-123		**109.1**	%REC	25	11/10/2010 6:38:00 PM	CCF
Surr: Toluene-d8		84.3-114		**96.4**	%REC	25	11/10/2010 6:38:00 PM	CCF
STANDARD METHOD 18TH ED. 4500-H B, LABORATORY ANALYZED								
Lab pH	NELAP	1.00		**4.71**		1	11/10/2010 12:56:00 PM	CS
STANDARD METHODS 18TH ED. 2540 D								
Total Suspended Solids	NELAP	6		**1160**	mg/L	1	11/8/2010 9:00:00 AM	RS

Sample Narrative

EPA 600 4.1.4, 200.7R4.4, Metals by ICP (Total)

Elevated reporting limit due to high levels of target and/or non-target analytes.

EPA 600 624, Volatile Organic Compounds by GC/MS

Elevated reporting limit due to sample composition.

TEKLAB, INC.

5445 HORSESHOE LAKE ROAD
COLLINSVILLE, ILLINOIS 62234

ENVIRONMENTAL TESTING LABORATORY

TEL: 618-344-1004
FAX: 618-344-1005

LABORATORY RESULTS

Client: Mallinckrodt Inc.
WorkOrder: 10110331
Lab ID: 10110331-005
Report Date: 12-Nov-10

Client Project: Loversol
Client Sample ID: 5 4427
Collection Date: 11/4/2010 2:00:00 PM
Matrix: AQUEOUS

Analyses	Certification	RL	Qual	Result	Units	DF	Date Analyzed	Analyst
EPA 600 4.1.4, 200.7R4.4, METALS BY ICP (TOTAL)								
Cadmium	NELAP	0.0400		< 0.0400	mg/L	20	11/12/2010 10:11:36 AM	JMW
Chromium	NELAP	0.200		0.662	mg/L	20	11/12/2010 10:11:36 AM	JMW
Copper	NELAP	0.200		< 0.200	mg/L	20	11/12/2010 10:11:36 AM	JMW
Iron	NELAP	0.400		1.79	mg/L	20	11/12/2010 10:11:36 AM	JMW
Lead	NELAP	0.800		< 0.800	mg/L	20	11/12/2010 10:11:36 AM	JMW
Nickel	NELAP	0.200		1.63	mg/L	20	11/12/2010 10:11:36 AM	JMW
Zinc	NELAP	0.200	J	0.10	mg/L	20	11/12/2010 10:11:36 AM	JMW
EPA 600 410.4								
Chemical Oxygen Demand	NELAP	20000		500000	mg/L	4	11/11/2010 10:00:00 AM	BSJ
EPA 600 624, VOLATILE ORGANIC COMPOUNDS BY GC/MS								
1,1,1-Trichloroethane	NELAP	125		ND	µg/L	25	11/10/2010 7:08:00 PM	CCF
1,1,2,2-Tetrachloroethane	NELAP	125		ND	µg/L	25	11/10/2010 7:08:00 PM	CCF
1,1,2-Trichloroethane	NELAP	125		ND	µg/L	25	11/10/2010 7:08:00 PM	CCF
1,1-Dichloroethane	NELAP	125		ND	µg/L	25	11/10/2010 7:08:00 PM	CCF
1,1-Dichloroethene	NELAP	125		ND	µg/L	25	11/10/2010 7:08:00 PM	CCF
1,2-Dichlorobenzene	NELAP	125		ND	µg/L	25	11/10/2010 7:08:00 PM	CCF
1,2-Dichloroethane	NELAP	125		ND	µg/L	25	11/10/2010 7:08:00 PM	CCF
1,2-Dichloropropane	NELAP	125		ND	µg/L	25	11/10/2010 7:08:00 PM	CCF
1,3-Dichlorobenzene	NELAP	125		ND	µg/L	25	11/10/2010 7:08:00 PM	CCF
1,4-Dichlorobenzene	NELAP	125		ND	µg/L	25	11/10/2010 7:08:00 PM	CCF
2-Chloroethyl vinyl ether	NELAP	500		ND	µg/L	25	11/10/2010 7:08:00 PM	CCF
Acrolein	NELAP	2500		ND	µg/L	25	11/10/2010 7:08:00 PM	CCF
Acrylonitrile	NELAP	125		ND	µg/L	25	11/10/2010 7:08:00 PM	CCF
Benzene	NELAP	50.0		ND	µg/L	25	11/10/2010 7:08:00 PM	CCF
Bromodichloromethane	NELAP	125		ND	µg/L	25	11/10/2010 7:08:00 PM	CCF
Bromoform	NELAP	125		ND	µg/L	25	11/10/2010 7:08:00 PM	CCF
Bromomethane	NELAP	250		ND	µg/L	25	11/10/2010 7:08:00 PM	CCF
Carbon tetrachloride	NELAP	125		ND	µg/L	25	11/10/2010 7:08:00 PM	CCF
Chlorobenzene	NELAP	125		ND	µg/L	25	11/10/2010 7:08:00 PM	CCF
Chloroethane	NELAP	250		ND	µg/L	25	11/10/2010 7:08:00 PM	CCF
Chloroform	NELAP	125		ND	µg/L	25	11/10/2010 7:08:00 PM	CCF
Chloromethane	NELAP	250		ND	µg/L	25	11/10/2010 7:08:00 PM	CCF
cis-1,3-Dichloropropene	NELAP	125		ND	µg/L	25	11/10/2010 7:08:00 PM	CCF
Dibromochloromethane	NELAP	125		ND	µg/L	25	11/10/2010 7:08:00 PM	CCF
Ethylbenzene	NELAP	125		ND	µg/L	25	11/10/2010 7:08:00 PM	CCF
Methylene chloride	NELAP	125		ND	µg/L	25	11/10/2010 7:08:00 PM	CCF
Tetrachloroethene	NELAP	125		ND	µg/L	25	11/10/2010 7:08:00 PM	CCF
Toluene	NELAP	50.0		ND	µg/L	25	11/10/2010 7:08:00 PM	CCF

TEKLAB, INC.

5445 HORSESHOE LAKE ROAD
COLLINSVILLE, ILLINOIS 62234

ENVIRONMENTAL TESTING LABORATORY

TEL: 618-344-1004
FAX: 618-344-1005

LABORATORY RESULTS

Client: Mallinckrodt Inc.
WorkOrder: 10110331
Lab ID: 10110331-005
Report Date: 12-Nov-10

Client Project: Loversol
Client Sample ID: 54427
Collection Date: 11/4/2010 2:00:00 PM
Matrix: AQUEOUS

Analyses	Certification	RL	Qual	Result	Units	DF	Date Analyzed	Analyst
EPA 600 624, VOLATILE ORGANIC COMPOUNDS BY GC/MS								
trans-1,2-Dichloroethene	NELAP	125		ND	µg/L	25	11/10/2010 7:08:00 PM	CCF
trans-1,3-Dichloropropene	NELAP	125		ND	µg/L	25	11/10/2010 7:08:00 PM	CCF
Trichloroethene	NELAP	125		ND	µg/L	25	11/10/2010 7:08:00 PM	CCF
Vinyl chloride	NELAP	50.0		ND	µg/L	25	11/10/2010 7:08:00 PM	CCF
Xylenes, Total	NELAP	125		ND	µg/L	25	11/10/2010 7:08:00 PM	CCF
Surr: 1,2-Dichloroethane-d4		74.7-129		97.8	%REC	25	11/10/2010 7:08:00 PM	CCF
Surr: 4-Bromofluorobenzene		86-119		104.1	%REC	25	11/10/2010 7:08:00 PM	CCF
Surr: Dibromofluoromethane		81.7-123		107.6	%REC	25	11/10/2010 7:08:00 PM	CCF
Surr: Toluene-d8		84.3-114		96.8	%REC	25	11/10/2010 7:08:00 PM	CCF
STANDARD METHOD 18TH ED. 4500-H B, LABORATORY ANALYZED								
Lab pH	NELAP	1.00		5.25		1	11/10/2010 12:56:00 PM	CS
STANDARD METHODS 18TH ED. 2540 D								
Total Suspended Solids	NELAP	6		2140	mg/L	1	11/8/2010 9:00:00 AM	RS

Sample Narrative

EPA 600 4.1.4, 200.7R4.4, Metals by ICP (Total)

Elevated reporting limit due to high levels of target and/or non-target analytes.

EPA 600 624, Volatile Organic Compounds by GC/MS

Elevated reporting limit due to sample composition.

TEKLAB, INC.

5445 HORSESHOE LAKE ROAD
COLLINSVILLE, ILLINOIS 62234

ENVIRONMENTAL TESTING LABORATORY

TEL: 618-344-1004
FAX: 618-344-1005

LABORATORY RESULTS

Client: Mallinckrodt Inc.
WorkOrder: 10110331
Lab ID: 10110331-006
Report Date: 12-Nov-10

Client Project: Loversol
Client Sample ID: 66203
Collection Date: 11/4/2010 2:00:00 PM
Matrix: AQUEOUS

Analyses	Certification	RL	Qual	Result	Units	DF	Date Analyzed	Analyst
EPA 600 4.1.4, 200.7R4.4, METALS BY ICP (TOTAL)								
Cadmium	NELAP	0.0400		< 0.0400	mg/L	20	11/12/2010 10:16:55 AM	JMW
Chromium	NELAP	0.200	J	0.19	mg/L	20	11/12/2010 10:16:55 AM	JMW
Copper	NELAP	0.200		< 0.200	mg/L	20	11/12/2010 10:16:55 AM	JMW
Iron	NELAP	0.400	J	0.27	mg/L	20	11/12/2010 10:16:55 AM	JMW
Lead	NELAP	0.800		< 0.800	mg/L	20	11/12/2010 10:16:55 AM	JMW
Nickel	NELAP	0.200		0.488	mg/L	20	11/12/2010 10:16:55 AM	JMW
Zinc	NELAP	0.200	J	0.070	mg/L	20	11/12/2010 10:16:55 AM	JMW
EPA 600 410.4								
Chemical Oxygen Demand	NELAP	20000		191000	mg/L	4	11/11/2010 10:00:00 AM	BSJ
EPA 600 624, VOLATILE ORGANIC COMPOUNDS BY GC/MS								
1,1,1-Trichloroethane	NELAP	125		ND	µg/L	25	11/10/2010 8:36:00 PM	CCF
1,1,2,2-Tetrachloroethane	NELAP	125		ND	µg/L	25	11/10/2010 8:36:00 PM	CCF
1,1,2-Trichloroethane	NELAP	125		ND	µg/L	25	11/10/2010 8:36:00 PM	CCF
1,1-Dichloroethane	NELAP	125		ND	µg/L	25	11/10/2010 8:36:00 PM	CCF
1,1-Dichloroethene	NELAP	125		ND	µg/L	25	11/10/2010 8:36:00 PM	CCF
1,2-Dichlorobenzene	NELAP	125		ND	µg/L	25	11/10/2010 8:36:00 PM	CCF
1,2-Dichloroethane	NELAP	125		ND	µg/L	25	11/10/2010 8:36:00 PM	CCF
1,2-Dichloropropane	NELAP	125		ND	µg/L	25	11/10/2010 8:36:00 PM	CCF
1,3-Dichlorobenzene	NELAP	125		ND	µg/L	25	11/10/2010 8:36:00 PM	CCF
1,4-Dichlorobenzene	NELAP	125		ND	µg/L	25	11/10/2010 8:36:00 PM	CCF
2-Chloroethyl vinyl ether	NELAP	500		ND	µg/L	25	11/10/2010 8:36:00 PM	CCF
Acrolein	NELAP	2500		ND	µg/L	25	11/10/2010 8:36:00 PM	CCF
Acrylonitrile	NELAP	125		ND	µg/L	25	11/10/2010 8:36:00 PM	CCF
Benzene	NELAP	50.0		ND	µg/L	25	11/10/2010 8:36:00 PM	CCF
Bromodichloromethane	NELAP	125		ND	µg/L	25	11/10/2010 8:36:00 PM	CCF
Bromoform	NELAP	125		ND	µg/L	25	11/10/2010 8:36:00 PM	CCF
Bromomethane	NELAP	250		ND	µg/L	25	11/10/2010 8:36:00 PM	CCF
Carbon tetrachloride	NELAP	125		ND	µg/L	25	11/10/2010 8:36:00 PM	CCF
Chlorobenzene	NELAP	125		ND	µg/L	25	11/10/2010 8:36:00 PM	CCF
Chloroethane	NELAP	250		ND	µg/L	25	11/10/2010 8:36:00 PM	CCF
Chloroform	NELAP	125		ND	µg/L	25	11/10/2010 8:36:00 PM	CCF
Chloromethane	NELAP	250		ND	µg/L	25	11/10/2010 8:36:00 PM	CCF
cis-1,3-Dichloropropene	NELAP	125		ND	µg/L	25	11/10/2010 8:36:00 PM	CCF
Dibromochloromethane	NELAP	125		ND	µg/L	25	11/10/2010 8:36:00 PM	CCF
Ethylbenzene	NELAP	125		ND	µg/L	25	11/10/2010 8:36:00 PM	CCF
Methylene chloride	NELAP	125		ND	µg/L	25	11/10/2010 8:36:00 PM	CCF
Tetrachloroethene	NELAP	125		ND	µg/L	25	11/10/2010 8:36:00 PM	CCF
Toluene	NELAP	50.0		ND	µg/L	25	11/10/2010 8:36:00 PM	CCF

TEKLAB, INC.

5445 HORSESHOE LAKE ROAD
COLLINSVILLE, ILLINOIS 62234

ENVIRONMENTAL TESTING LABORATORY

TEL: 618-344-1004
FAX: 618-344-1005

LABORATORY RESULTS

Client: Mallinckrodt Inc.
WorkOrder: 10110331
Lab ID: 10110331-006
Report Date: 12-Nov-10

Client Project: Loversol
Client Sample ID: 6 6203
Collection Date: 11/4/2010 2:00:00 PM
Matrix: AQUEOUS

Analyses	Certification	RL	Qual	Result	Units	DF	Date Analyzed	Analyst
EPA 600 624, VOLATILE ORGANIC COMPOUNDS BY GC/MS								
trans-1,2-Dichloroethene	NELAP	125		**ND**	µg/L	25	11/10/2010 8:36:00 PM	CCF
trans-1,3-Dichloropropene	NELAP	125		**ND**	µg/L	25	11/10/2010 8:36:00 PM	CCF
Trichloroethene	NELAP	125		**ND**	µg/L	25	11/10/2010 8:36:00 PM	CCF
Vinyl chloride	NELAP	50.0		**ND**	µg/L	25	11/10/2010 8:36:00 PM	CCF
Xylenes, Total	NELAP	125		**ND**	µg/L	25	11/10/2010 8:36:00 PM	CCF
Surr: 1,2-Dichloroethane-d4		74.7-129		**97.9**	%REC	25	11/10/2010 8:36:00 PM	CCF
Surr: 4-Bromofluorobenzene		86-119		**105.3**	%REC	25	11/10/2010 8:36:00 PM	CCF
Surr: Dibromofluoromethane		81.7-123		**107.7**	%REC	25	11/10/2010 8:36:00 PM	CCF
Surr: Toluene-d8		84.3-114		**95.1**	%REC	25	11/10/2010 8:36:00 PM	CCF
STANDARD METHOD 18TH ED. 4500-H B, LABORATORY ANALYZED								
Lab pH	NELAP	1.00		**7.14**		1	11/10/2010 12:56:00 PM	CS
STANDARD METHODS 18TH ED. 2540 D								
Total Suspended Solids	NELAP	6		**12200**	mg/L	1	11/8/2010 9:00:00 AM	RS

Sample Narrative

EPA 600 4.1.4, 200.7R4.4, Metals by ICP (Total)

Elevated reporting limit due to high levels of target and/or non-target analytes.

EPA 600 624, Volatile Organic Compounds by GC/MS

Elevated reporting limit due to sample composition.

COVIDIEN

Facsimile Communication

To: Mr. Steve Grace

Company: MSD Environmental Compliance

Fax Number: 314.436.8766

Date: November 17, 2010

Number of Pages *(including cover sheet)*: 20

Health, Safety, Environmental

Lisa Meyer
Senior HSE Engineer

Covidien/Mallinckrodt
3600 N. Second St.
St. Louis, Missouri 63147

Telephone 314-654-3374
Facsimile 314-654-1251

☐ For your information
X Please respond
X Urgent
☐ Confidential

Comments:

Dear Mr. Grace,

Attached please find an application for the Special Discharge of an Ioversol and water solution from Building 504. If you have any questions or need additional information, please contact me.

Thank you,

Lisa Meyer

SR

COVIDIEN

Mallinckrodt

November 4, 2010

Mr. Doug Mendoza
Manager, Environmental Compliance
St. Louis Metropolitan Sewer District
10 East Grand Ave
St. Louis, MO 63147

RE: Follow-up to the Unplanned Ethylene Glycol Release from Building 250 at the St. Louis Plant
PERMIT NO. 2112059600-3

Dear Mr. Mendoza:

This letter is a follow-up to an unplanned release of approximately 1400 gallons of a 30% ethylene glycol and water solution from Building 250 at the Mallinckrodt St. Louis Plant's as reported via phone call to MSD dispatch on October 30, 2010 by Covidien employee Melanie Dunay.

At approximately 0420 on October 30, 2010, an operator began to put glycol on the primary condenser for a process tank in Building 250. At 0436 an alarm was discovered on the buildings' computer station by another operator. The supervisor went to the line and shut the glycol supply valve to the primary condenser at 0439 which stopped the discharge. The total release of ethylene glycol was approximately 3855 pounds.

Upon investigation, it was discovered that the operator inadvertently failed to close a valve that would have directed the glycol back to the glycol return system rather than discharging it to the sewer. The ethylene glycol and water solution was discharged to a plant sewer and to MSD through the plant's main outfall, SP010.

RECEIVED
NOV 05 2010
DIVISION OF
ENVIRONMENTAL COMPLIANCE

COVIDIEN/MALLINCKRODT
3600 NORTH SECOND STREET
ST. LOUIS, MO 63147

TELEPHONE: 314-654-2000
FAX: 314-654-1251

COVIDIEN

Immediate corrective actions included locking out the sewer valve and conducting training on the incident with all building operators. Future corrective actions include the implementation of a management system to prevent the release of glycol to the sewer from condensers and to install engineering controls to prevent glycol release to the sewer from condensers.

Members of the St. Louis Plant site leadership team are available to meet with you if you would like to discuss this incident further. Please call me at 314.654.3374 if you would like to schedule a meeting.

Sincerely,

Lisa Meyer
Senior HSE Engineer

RECEIVED
NOV 05 2010
DIVISION OF
ENVIRONMENTAL COMPLIANCE

COVIDIEN/MALLINCKRODT
3600 NORTH SECOND STREET
ST. LOUIS, MO 63147

TELEPHONE: 314-654-2000
FAX: 314-654-1251

SR

Doug Mendoza

MALLINCKRODT
2112059700

From: Sheila Michael
Sent: Monday, November 01, 2010 8:02 AM
To: Doug Mendoza

Doug,

I received a call from dispatch concerning a 1,400 glycol release (roof condensers) at Covidien, 3600 N. 2nd, at 5am on Oct. 30th. Melanie D., 486-2963, reported the incident.

Bissell operations was notified.

Sheila

ACCOUNT NUMBER: 21120596-00

COMPANY NAME: **MALLINCKRODT INC**
3600 N. 2nd St.
St. Louis, MO 63147

CORRESPONDENCE

FROM 01-12-10 THRU 10-27-10

X	CORRESPONDENCE LOCATED IN [redacted] ARCHIVE FILE CABINET

ACCOUNT NUMBER: 2112059600

COMPANY NAME: MALLINCKRODT INC
3600 N 2nd St.
St. Louis, MO 63147

CORRESPONDENCE

FROM 06-09-09 THRU 12-23-09

☑ CORRESPONDANCE LOCATED IN OVERFLOW FILE

ACCOUNT NUMBER: 21120596-00

COMPANY NAME: **MALLINCKRODT INC**
3600 N. 2nd St.
St. Louis, MO 63147

CORRESPONDENCE

FROM 01-12-10 THRU 10-27-10

X	CORRESPONDENCE LOCATED IN [redacted] ARCHIVE FILE CABINET

06-15-11 Moved to Archive Cabinet

ACCOUNT NUMBER: 2112059600

COMPANY NAME: MALLINCKRODT INC
3600 N 2nd St.
St. Louis, MO 63147

CORRESPONDENCE

FROM 06-09-09 THRU 12-23-09

☑ CORRESPONDANCE LOCATED IN OVERFLOW FILE

TO: Chris Verplancke, Finance Department

FROM: Steven M. Grace, DEC

DATE: October 27, 2010

RE: **Wastewater User Charge Billing for Special Discharge**

Please bill, by invoice, the following charges applicable to an on-site special discharge approved in our letter dated October 30, 1998, as modified in letters dated November 20, 1998, July 19, 1999, March 28, 2001, October 13, 2004, June 19, 2006, and May 22, 2008. The discharge dates and quantity are from information submitted by Sharon Cotner, Corps of Engineers, in a letter dated October 25, 2010.

This charge is based on the rates in MSD Wastewater User Charge Ordinance 13021. Please note that, as of July 1, 2010, the volume charge of $2.02 per 100 cubic feet of wastewater became effective.

PARTY TO BILL: Larry Joellenbeck
The Shaw Group Inc.
1 Angelrodt Street
St. Louis, MO 63147

BILLING IS FOR: On-Site Special Discharge

DISCHARGE PERIOD: July through September 2010

SOURCE OF WASTE: Treated construction water from the St. Louis Downtown FUSRAP Site located at Mallinckrodt, Inc., 3600 N. Second Street, St. Louis, Missouri.

Discharge Period	Billing Item	Quantity	Units	Rate	Charge
7/7/10 - 8/30/10	Volume	1,754	CcF	$2.02	$3,543.08
Totals:	---	1,754	CcF	---	$3,543.08

If you have any questions, please call me on extension 8755.

bv

pc: Brian Gibson
Doug Mendoza
Larry Joellenbeck, The Shaw Group Inc., 1 Angelrodt St., St. Louis, MO 63147

File: IU, MALLINCKRODT INC [2112059600]

N:\Envcom\EXEC\ENVCOM\GRACE\Special Discharge\Special Billing Letters\fusrapsldss.sdosbill 10-27-10.doc

SR

COVIDIEN

October 21, 2010

Mr. Doug Mendoza
Manager, Environmental Compliance
St. Louis Metropolitan Sewer District
10 East Grand Ave
St. Louis, MO 63147

RE: Follow-up to the Unplanned Acetonitrile Release from Building 504 at the St. Louis Plant
PERMIT NO. 2112059600-3

Dear Mr. Mendoza:

This letter is a follow-up to an unplanned release of 165 gallons of acetonitrile from Building 504 at the Mallinckrodt St. Louis Plant's as reported via phone call to MSD dispatch on October 16, 2010 by Covidien employee Ken Coffey.

At approximately 1610 on October 16, 2010, acetonitrile was being pumped into a process tank in Building 504. An operator noticed that the level in the tank was lower than expected and stopped the pump. Upon investigation, it was discovered that valves were misaligned causing the 165 gallons of acetonitrile to be discharged to a plant sewer.

Operators have been retrained on the requirements of verifying valve alignment prior to pumping.

The acetonitrile was discharged to a plant sewer and to MSD through the plant's main outfall, SP010.

If you have any questions or need additional information, please call me at 314.654.3374.

Sincerely,

Lisa Meyer
Senior HSE Engineer

RECEIVED
OCT 22 2010
DIVISION OF
ENVIRONMENTAL COMPLIANCE

COVIDIEN/MALLINCKRODT
3600 NORTH SECOND STREET
ST. LOUIS, MO 63147

TELEPHONE: 314-654-2000
FAX: 314-654-1251

SR
10-25

COVIDIEN

October 20, 2010

Mr. Doug Mendoza
Metropolitan St. Louis Sewer District
Department of Environmental Compliance
10 East Grand Avenue
St. Louis, MO 63147

Re: 2010 3rd Quarter Self-Monitoring Report for Permit No. 21120596 - 3

Dear Mr. Mendoza,

Please find enclosed the 2010 3rd Quarter Self Monitoring report for Mallinckrodt Inc.

The following sample points received no pharmaceutical process water flow during the third quarter: SP080 and SP935.

The planned electric shutdown occurred on September 18 – 20, 2010. As was stated in our letter to you dated August 18, 2010, the two lift station outfalls SP008 and SP011 overflowed directly to MSD during this time. Samples were taken and analyzed and are included in this report as well as pH readings during the overflow event.

If you have any questions or require more detailed information, please contact me at 314.654.3374.

Sincerely,

Lisa Meyer
Senior HSE Engineer

ENCLOSURES

RECEIVED
OCT 25 2010
DIVISION OF
ENVIRONMENTAL COMPLIANCE

COVIDIEN/MALLINCKRODT
3600 NORTH SECOND STREET
ST. LOUIS, MO 63147

TELEPHONE: 314-654-2000
FAX: 314-654-1251

METROPOLITAN ST. LOUIS SEWER DISTRICT
INDUSTRIAL USER RADIOACTIVE MATERIALS DISCHARGE REPORT

PART I: IDENTIFYING INFORMATION

Company Name: Mallinckrodt - Covidien

Permit No: 21120596-3

Premise Address: 3600 N Second St. St. Louis, MO 63147

Reporting Period: ☐(JAN-MAR) ☐(APR-JUNE) ☒(JULY-SEPT) ☐(OCT-DEC)

PART II: RECORD OF DISPOSAL OF RADIOACTIVE MATERIALS TO THE SEWER SYSTEM

RADIONUCLIDE	ACTIVITY DISCHARGED (millicuries)
TOTAL ACTIVITY DISCHARGED:	0

PART III: CERTIFICATION STATEMENTS

Place your initials in the box under item A.
Everyone must complete the information under items A & B and sign this report.

A. CERTIFICATION OF COMPLIANCE WITH STATE AND FEDERAL REGULATIONS

[pcl] I certify that to the best of my knowledge & belief, all requirements of 10 CFR Part 20.2003 and 19 CSR Part 20-10.090 governing disposal by release into sanitary sewage for materials regulated by the Nuclear Regulatory Commission and the Missouri Department of Health, respectively, have been met for the period covered by this report.

RECEIVED
OCT 25 2010
DIVISION OF ENVIRONMENTAL COMPLIANCE

B. RADIOACTIVE MATERIALS DISCHARGE REPORT CERTIFICATION

I certify under penalty of Law that this document and all attachments were prepared under my direction or supervision in accordance with a system designed to assure that qualified personnel properly gather and evaluate the information submitted. Based on my inquiry of the person or persons who manage the system, or those persons directly responsible for gathering the information, the information submitted is, to the best of my knowledge and belief, true, accurate, and complete. I am aware that there are significant penalties for submitting false information, including the possibility of fine and imprisonment for knowing violations.

Print/type name of signing official: Richard C. Proehl

Title: Site Director Telephone: 314-654-5816

Signature: Richard C. Proehl Date: 10/19/10

radrpt.doc 2/00

PART III: SPECIAL CERTIFICATION STATEMENTS

Based on the special conditions contained in your discharge permit you may be required to certify the following.
Please review your permit and **PLACE YOUR INITIALS ON THE LINES NEXT TO THE CERTIFICATIONS.**

(A) NO CHANGE IN WASTEWATER DISCHARGE AT SAMPLE POINTS WITH NO MONITORING REQUIRED

For permit special conditions that waive monitoring at any sample point(s) specified in your permit, you are required to make the following certification for each report in which monitoring is waived:

RCP I certify, since the last discharge monitoring report, there has been no change in the character of the wastes discharged at sample points 001 and 002.

RCP I certify, since the last discharge monitoring report, there has been no discharge from sample points 008 and 011.

(B) NO CHANGE IN WASTEWATER DISCHARGE AT ACTIVE CONNECTIONS WITHOUT SAMPLE POINTS

For permit special conditions that waive monitoring at active connection points which are not specified as sample points in your permit, you are required to make the following certification:

RCP I certify, since the last discharge monitoring report, there has been no change in the character of wastes discharged at those active connection points which are not specified in my permit.

(E) NO DISCHARGE OF CATEGORICAL WASTE

For permit special conditions that prohibit discharge of wastes which are subject to certain categorical pretreatment standards, you are required to make the following certification:

RCP I certify, since the last discharge monitoring report, there has been no discharge of wastes which are subject to pretreatment standards in 40 CFR 414 (except for those wastes conveyed by SP 905).

(F) CYANIDE NOT USED OR GENERATED IN 40 CFR 439 OPERATIONS

Discharges subject to Pharmaceutical Categorical Standards (40 CFR 439) can be exempted from limitations and monitoring for Total Cyanide at the Pharmaceutical sample points 080, 915, 920, 935, 936, and 937, subject to the following certification:

RCP I certify, since the last discharge monitoring report, cyanide has not been used or generated in any pharmaceutical manufacturing process subject to Categorical Standards in 40 CFR 439.

(H) PHARMACEUTICAL POLLUTANTS NOT USED OR GENERATED IN 40 CFR 439 OPERATIONS

Discharges subject to Pharmaceutical Categorical Standards (40 CFR 439) can be exempted from monitoring for certain 40 CFR 439-regulated pollutants at the Pharmaceutical sample points 915, 935, and 936, subject to the following certification:

RCP I certify, since the last discharge monitoring report, the 40 CFR 439-regulated pollutants, as determined in permittee's report dated April 5, 2010, have not been used or generated in any pharmaceutical manufacturing process subject to Categorical Standards in 40 CFR 439. In addition, the above-referenced report remains valid.

(I) SURROGATE MONITORING ALLOWED FOR 40 CFR 439 OPERATIONS

Discharges subject to Pharmaceutical Categorical Standards (40 CFR 439) can be exempted from monitoring for certain 40 CFR 439-regulated pollutants, and replaced by monitoring for surrogate pollutant(s), at the Pharmaceutical sample points 920 and 937 subject to the following certification:

RCP I certify, since the last discharge monitoring report, the 40 CFR 439-regulated pollutants, as determined in permittee's report dated April 5, 2010, continue to receive the same degree of treatment as the surrogate pollutant(s). In addition, the above-referenced report remains valid.

PART IV: GENERAL CERTIFICATION STATEMENTS

B DISCHARGE MONITORING REPORT CERTIFICATION

All permittees must sign and complete the information below:

I certify under penalty of Law that this document and all attachments were prepared under my direction or supervision in accordance with a system designed to assure that qualified personnel properly gather and evaluate the information submitted. Based on my inquiry of the person or persons who manage the system, or those persons directly responsible for gathering the information, the information submitted is, to the best of my knowledge and belief, true, accurate, and complete. I am aware that there are significant penalties for submitting false information, including the possibility of fine and imprisonment for knowing violations.

Print or type name of signing official: Richard C. Proehl

Title: Site Director Telephone: 314.654.5816

Signature: Richard C Proehl Date: 10/19/10

RECEIVED
OCT 25 2010
DIVISION OF
ENVIRONMENTAL COMPLIANCE

METROPOLITAN ST. LOUIS SEWER DISTRICT
2010 INDUSTRIAL USER SELF MONITORING REPORT

PART I: IDENTIFYING INFORMATION

Company Name: **Mallinckrodt Inc.**

Permit No.: 2112059600 - 3 Effective Date: 06-01-2010 Expiration Date: 05-31-2015

Premise Address: 3600 North Second St., St. Louis, MO 63147

Monitoring Period: _____(JAN-MAR) ____(APR-JUNE) __X__(JULY-SEPT) _____(OCT-DEC)

Samples Collected By: Mallinckrodt Inc

Analysis Performed By: Teklab

Part II: ANALYTICAL RESULTS OF SELF MONITORING

MSD SAMPLE POINT REFERENCE NUMBERS	---->		**001**						
DATES ON WHICH SAMPLES WERE COLLECTED	---->		NA						
TIMES AT WHICH SAMPLES WERE COLLECTED	---->								
PARAMETER	LIMIT	**RECORD SAMPLE TYPES (G,C,M OR E) & RESULTS BELOW** G=grab,C=composite,M=measured flow,E=estimated flo							UNITS
FLOW		E	1,000						gal/day
NO MONITORING REQUIRED (Sanitary Only)									
There have been no change in the character of the wastes discharged since the last report.									

RECEIVED

OCT 25 2010

DIVISION OF
ENVIRONMENTAL COMPLIANCE

METROPOLITAN ST. LOUIS SEWER DISTRICT
2010 INDUSTRIAL USER SELF MONITORING REPORT

PART I: IDENTIFYING INFORMATION

Company Name: **Mallinckrodt Inc.**

Permit No.: 2112059600 - 3 Effective Date: 06-01-2010 Expiration Date: 05-31-2015

Premise Address: 3600 North Second St., St. Louis, MO 63147

Monitoring Period: _____(JAN-MAR) ____(APR-JUNE) __X__(JULY-SEPT) ____(OCT-DEC)

Samples Collected By: Mallinckrodt Inc

Analysis Performed By: Teklab

Part II: ANALYTICAL RESULTS OF SELF MONITORING

MSD SAMPLE POINT REFERENCE NUMBERS	----->		002						
DATES ON WHICH SAMPLES WERE COLLECTED	----->		NA						
TIMES AT WHICH SAMPLES WERE COLLECTED	----->								
PARAMETER	LIMIT	RECORD SAMPLE TYPES (G,C,M OR E) & RESULTS BELOW G=grab,C=composite,M=measured flow,E=estimated flo							UNITS
FLOW		E	2,200						gal/day
NO MONITORING REQUIRED (Sanitary Only)									
There have been no change in the character of the wastes discharged since the last report.									

RECEIVED
OCT 25 2010
DIVISION OF
ENVIRONMENTAL COMPLIANCE

METROPOLITAN ST. LOUIS SEWER DISTRICT
2010 INDUSTRIAL USER SELF MONITORING REPORT

PART I: IDENTIFYING INFORMATION

Company Name: **Mallinckrodt Inc.**

Permit No.: 2112059600 - 3 Effective Date: 06-01-2010 Expiration Date: 05-31-2015

Premise Address: 3600 North Second St., St. Louis, MO 63147

Monitoring Period: ____(JAN-MAR) ____(APR-JUNE) __X__(JULY-SEPT) _____(OCT-DEC)

Samples Collected By: Mallinckrodt

Analysis Performed By: TEKLAB

Part II: ANALYTICAL RESULTS OF SELF MONITORING

MSD SAMPLE POINT REFERENCE NUMBERS	----->	003		009		099		
DATES ON WHICH SAMPLES WERE COLLECTED	----->	7/16/2010		7/16/2010		calculated		
TIMES AT WHICH SAMPLES WERE COLLECTED	----->	0615, 0715, 0815, 0915		0640, 0740, 0840, 0940		n/a		
PARAMETER	LIMIT	RECORD SAMPLE TYPES (G,C,M OR E) & RESULTS BELOW G=grab,C=composite,M=measured flow,E=estimated flow						UNITS
FLOW		M	45,878	M	38,362	E	7,516	gal/day
Oil & Grease	200	G	26	G	4	E	138	mg/l
Biochemical Oxygen Demand	****	C	34	C	33	E	39	mg/l
Chemical Oxygen Demand	****	C	109	C	37	E	476	mg/l
Total Suspended Solids	****	C	31	C	38	E	0*	mg/l
Temperature	****	G	28	G	26	E	38	deg C
pH	****	G	6.0	G	6.0	E	6.0	S.U.
Lab Dilution Factor			1		1			

**** No limits for SP003 or SP009;
monitoring requirement only for calculation at SP099

* Calculated value was less than zero.

RECEIVED
OCT 25 2010
DIVISION OF
ENVIRONMENTAL COMPLIANCE

METROPOLITAN ST. LOUIS SEWER DISTRICT
2010 INDUSTRIAL USER SELF MONITORING REPORT

PART I: IDENTIFYING INFORMATION

Company Name: **Mallinckrodt Inc.**

Permit No.: 2112059600 - 3 Effective Date: 06-01-2010 Expiration Date: 05-31-2015

Premise Address: 3600 North Second St., St. Louis, MO 63147

Monitoring Period: _____(JAN-MAR) _____(APR-JUNE) __X__(JULY-SEPT) _____(OCT-DEC)

Samples Collected By: Mallinckrodt

Analysis Performed By: TEKLAB

Part II: ANALYTICAL RESULTS OF SELF MONITORING

MSD SAMPLE POINT REFERENCE NUMBERS	----->		005						
DATES ON WHICH SAMPLES WERE COLLECTED	----->		7/16/2010						
TIMES AT WHICH SAMPLES WERE COLLECTED	----->		0625, 0725, 0825, 0925						
PARAMETER	LIMIT	RECORD SAMPLE TYPES (G,C,M OR E) & RESULTS BELOW G=grab,C=composite,M=measured flow,E=estimated flo							UNITS
FLOW		E	32,000						gal/day
Oil & Grease	200	G	<5						mg/l
Biochemical Oxygen Demand	****	C	7						mg/l
Chemical Oxygen Demand	****	C	<50						mg/l
Total Suspended Solids	****	C	39						mg/l
Temperature	60	G	31						deg C
pH	5.5 - 11.5	G	6.5						S.U.
Lab Dilution Factor			1						

RECEIVED

OCT 25 2010

DIVISION OF
ENVIRONMENTAL COMPLIANCE

METROPOLITAN ST. LOUIS SEWER DISTRICT
2010 INDUSTRIAL USER SELF MONITORING REPORT

PART I: IDENTIFYING INFORMATION

Company Name: **Mallinckrodt Inc.**

Permit No.: 2112059600 - 3 Effective Date: 06-01-2010 Expiration Date: 05-31-2015

Premise Address: 3600 North Second St., St. Louis, MO 63147

Monitoring Period: ____(JAN-MAR) ____(APR-JUNE) __X__(JULY-SEPT) ____(OCT-DEC)

Samples Collected By: Mallinckrodt

Analysis Performed By: TEKLAB

Part II: ANALYTICAL RESULTS OF SELF MONITORING

MSD SAMPLE POINT REFERENCE NUMBERS	----->		008					
DATES ON WHICH SAMPLES WERE COLLECTED	----->		9/18/2010					
TIMES AT WHICH SAMPLES WERE COLLECTED	----->		0815					
PARAMETER	LIMIT	RECORD SAMPLE TYPES (G,C,M OR E) & RESULTS BELOW G=grab,C=composite,M=measured flow,E=estimated flo						UNITS
FLOW		E	130,000					gal/day
Oil & Grease	200	G	7					mg/l
Biochemical Oxygen Demand	****	G	118					mg/l
Chemical Oxygen Demand	****	G	219					mg/l
Temperature	60	G	27					deg C
Total Suspended Solids	****	G	47					mg/L
pH	5.5 - 11.5	G	6.4					S.U.
Lab Dilution Factor			1					

RECEIVED
OCT 25 2010
DIVISION OF
ENVIRONMENTAL COMPLIANCE

METROPOLITAN ST. LOUIS SEWER DISTRICT
2010 INDUSTRIAL USER SELF MONITORING REPORT

PART I: IDENTIFYING INFORMATION

Company Name: **Mallinckrodt Inc.**

Permit No.: 2112059600 - 3 Effective Date: 06-01-2010 Expiration Date: 05-31-2015

Premise Address: 3600 North Second St., St. Louis, MO 63147

Monitoring Period: ____(JAN-MAR) ____(APR-JUNE) _X__(JULY-SEPT) ____(OCT-DEC)

Samples Collected By: Mallinckrodt

Analysis Performed By: TEKLAB

Part II: ANALYTICAL RESULTS OF SELF MONITORING

MSD SAMPLE POINT REFERENCE NUMBERS	----->		008					
DATES ON WHICH SAMPLES WERE COLLECTED	----->		9/18/2010					
TIMES AT WHICH SAMPLES WERE COLLECTED	----->		0815					
PARAMETER	LIMIT	RECORD SAMPLE TYPES (G,C,M OR E) & RESULTS BELOW G=grab,C=composite,M=measured flow,E=estimated flo						UNITS
FLOW		E	130,000					gal/day
1,1,1-Trichloroethane		G	<0.005					mg/l
1,1,2,2-Tetrachloroethane		G	<0.005					mg/l
1,1,2-Trichloroethane		G	<0.005					mg/l
1,1-Dichloroethane		G	<0.005					mg/l
1,1-Dichloroethene		G	<0.005					mg/l
1,2-Dichlorobenzene		G	<0.005					mg/l
1,2-Dichloroethane		G	<0.005					mg/l
1,2-Dichloropropane		G	<0.005					mg/l
1,3-Dichlorobenzene		G	<0.005					mg/l
1,4-Dichlorobenzene		G	<0.005					mg/l
2-Chloroethylvinylether		G	<0.020					mg/l
Acrolein		G	<0.100					mg/l
Acrylonitrile		G	<0.005					mg/l
Benzene		G	<0.002					mg/l
Bromodichloromethane		G	0.0011					mg/l
Bromoform		G	<0.005					mg/l
Bromomethane		G	<0.010					mg/l
Carbon Tetrachloride		G	<0.005					mg/l
Chlorobenzene		G	<0.005					mg/l
Chloroethane		G	<0.010					mg/l
Chloroform		G	0.0053					mg/l
Chloromethane		G	<0.010					mg/l
cis-1,3-Dicholropropene		G	<0.005					mg/l
Dibromochloromethane		G	<0.005					mg/l
Ethylbenzene		G	<0.005					mg/l
Methylene Chloride		G	<0.005					mg/l
Tetrachloroethene		G	<0.005					mg/l
Toluene		G	<0.002					mg/l
1,2-Dichloroethene		G	<0.005					mg/l
trans-1,3-Dichloropropene		G	<0.005					mg/l
Trichloroethene		G	<0.005					mg/l
Vinyl Chloride		G	0.0017					mg/l
1,2,4-Trichlorobenzene		G	<0.008					mg/l
2,4,6-Trichlorophenol		G	<0.008					mg/l
2,4-Dichlorophenol		G	<0.008					mg/l
2,4-Dimethylphenol		G	<0.008					mg/l
2,4-Dinitrophenol		G	<0.017					mg/l
2,4-Dinitrotoluene		G	<0.008					mg/l
2,6-Dinitrotoluene		G	<0.008					mg/l
2-Chloronapthalene		G	<0.008					mg/l
2-Chlorophenol		G	<0.008					mg/l
2-Nitrophenol		G	<0.017					mg/l
3,3-Dichlorobenzidine		G	<0.008					mg/l
2-Methyl-4,6-dinitrophenol		G	<0.017					mg/l
4-Bromophenyl-phenylether		G	<0.008					mg/l
4-Chloro-3-methylphenol		G	<0.017					mg/l
4-Chlorophenyl-phenylether		G	<0.008					mg/l
4-Nitrophenol		G	<0.017					mg/l
Acenapthene		G	<0.008					mg/l
Acenaphthylene		G	<0.008					mg/l
Anthracene		G	<0.008					mg/l
Benzidine		G	<0.034					mg/l
Benzo(a)anthracene		G	<0.008					mg/l
Benzo(a)pyrene		G	<0.008					mg/l

RECEIVED
2010
DIVISION OF
ENVIRONMENTAL COMPLIAN

MSD 011670

METROPOLITAN ST. LOUIS SEWER DISTRICT
2010 INDUSTRIAL USER SELF MONITORING REPORT

PART I: IDENTIFYING INFORMATION

Company Name: **Mallinckrodt Inc.**

Permit No.: 2112059600 - 3 Effective Date: 06-01-2010 Expiration Date: 05-31-2015

Premise Address: 3600 North Second St., St. Louis, MO 63147

Monitoring Period: ____(JAN-MAR) ____(APR-JUNE) _X__(JULY-SEPT) ____(OCT-DEC)

Samples Collected By: Mallinckrodt

Analysis Performed By: TEKLAB

Part II: ANALYTICAL RESULTS OF SELF MONITORING

MSD SAMPLE POINT REFERENCE NUMBERS	---->		008					
DATES ON WHICH SAMPLES WERE COLLECTED	---->		9/18/2010					
TIMES AT WHICH SAMPLES WERE COLLECTED	---->		0815					
PARAMETER	LIMIT	RECORD SAMPLE TYPES (G,C,M OR E) & RESULTS BELOW G=grab,C=composite,M=measured flow,E=estimated flo						UNITS
FLOW		E	130,000					gal/day
Benzo(b)fluoranthene		G	<0.008					mg/l
Benzo(g,h,i)perylene		G	<0.008					mg/l
Benzo(k)fluoranthene		G	<0.008					mg/l
Bis(2-chloroethoxy)methane		G	<0.008					mg/l
Bis(2-chloroethyl)ether		G	<0.008					mg/l
Bis(2-chloroisopropyl)ether		G	<0.008					mg/l
Bis(2-ethylhexyl)phthalate		G	<0.005					mg/l
Butyl benzyl phthalate		G	<0.008					mg/l
Chrysene		G	<0.008					mg/l
Dibenzo(a,h)anthracene		G	<0.008					mg/l
Diethyl phthalate		G	<0.008					mg/l
Dimethyl phthalate		G	<0.008					mg/l
Di-n-butyl phthalate		G	<0.008					mg/l
Di-n-octyl-phthalate		G	<0.008					mg/l
Fluorene		G	<0.008					mg/l
Fluoranthene		G	<0.008					mg/l
Hexachlorobenzene		G	<0.008					mg/l
Hexachlorobutadiene		G	<0.008					mg/l
Hexachlorocyclopentadiene		G	<0.017					mg/l
Hexachloroethane		G	<0.008					mg/l
Ideno(1,2,3-cd)pyrene		G	<0.008					mg/l
Isophorone		G	<0.008					mg/l
Naphthalene		G	<0.008					mg/l
Nitrobenzene		G	<0.008					mg/l
N-nitrosodimethylamine		G	<0.017					mg/l
N-nitrosodi-n-propylamine		G	<0.008					mg/l
N-nitrosodiphenylamine		G	<0.008					mg/l
Pentachlorophenol		G	<0.017					mg/l
Phenanthrene		G	<0.008					mg/l
Phenol		G	<0.004					mg/l
Pyrene		G	<0.008					mg/l
1,2-Diphenylhydrazine		G	<0.008					mg/l
Total Toxic Organics	5.844	--	0.795					mg/l
Lab Dilution Factor			1					

RECEIVED
OCT 25 2010
DIVISION OF
ENVIRONMENTAL COMPLIANCE

MSD 011671

Mallinckrodt pH Monitoring Data for SP008: Planned Electrical Shutdown Overflow		
September 18, 2009 - September 20, 2010		
Date	Time	pH
18-Sep-10	8:15:00	6.35
18-Sep-10	8:45:00	7.55
18-Sep-10	9:15:00	7.75
18-Sep-10	9:45:00	8.12
18-Sep-10	10:15:00	8.23
18-Sep-10	10:45:00	8.22
18-Sep-10	11:15:00	8.08
18-Sep-10	11:45:00	7.98
18-Sep-10	12:15:00	8.01
18-Sep-10	12:45:00	7.43
18-Sep-10	13:15:00	7.55
18-Sep-10	13:45:00	7.70
18-Sep-10	14:15:00	7.79
18-Sep-10	14:45:00	8.01
18-Sep-10	15:15:00	7.96
18-Sep-10	15:45:00	7.95
18-Sep-10	16:15:00	7.93
18-Sep-10	16:45:00	8.02
18-Sep-10	17:15:00	8.13
18-Sep-10	17:45:00	7.99
18-Sep-10	18:15:00	7.98
18-Sep-10	18:45:00	7.97
18-Sep-10	19:15:00	7.99
18-Sep-10	19:45:00	8.04
18-Sep-10	20:15:00	8.07
18-Sep-10	20:45:00	8.12
18-Sep-10	21:15:00	8.09
18-Sep-10	21:45:00	8.09
19-Sep-10	22:15:00	8.09
19-Sep-10	22:45:00	8.10
19-Sep-10	23:15:00	8.10
19-Sep-10	0:00:00	7.34
19-Sep-10	0:30:00	6.97
19-Sep-10	1:00:00	6.91
19-Sep-10	1:30:00	7.23
19-Sep-10	2:00:00	7.49
19-Sep-10	2:30:00	7.87
19-Sep-10	3:00:00	8.08
19-Sep-10	3:30:00	8.15
19-Sep-10	4:00:00	7.91
19-Sep-10	4:30:00	8.10
19-Sep-10	5:00:00	7.68
19-Sep-10	5:30:00	7.76
19-Sep-10	6:00:00	7.83
19-Sep-10	6:30:00	7.75
19-Sep-10	7:00:00	7.45
19-Sep-10	7:25:00	7.32

RECEIVED
OCT 25 2010
DIVISION OF
ENVIRONMENTAL COMPLIANCE

Mallinckrodt pH Monitoring Data for SP008: Planned Electrical Shutdown Overflow		
September 18, 2009 - September 20, 2010		
Date	Time	pH
19-Sep-10	7:50:00	7.61
19-Sep-10	8:05:00	7.55
19-Sep-10	8:35:00	7.16
19-Sep-10	9:05:00	7.47
19-Sep-10	9:35:00	7.51
19-Sep-10	10:05:00	7.35
19-Sep-10	10:35:00	7.76
19-Sep-10	11:05:00	7.60
19-Sep-10	11:35:00	7.70
19-Sep-10	12:05:00	7.74
19-Sep-10	12:35:00	7.87
19-Sep-10	13:05:00	7.91
19-Sep-10	13:35:00	7.97
19-Sep-10	14:05:00	8.08
19-Sep-10	14:35:00	8.22
19-Sep-10	15:05:00	8.27
19-Sep-10	15:35:00	8.22
19-Sep-10	16:05:00	8.02
19-Sep-10	16:35:00	8.07
19-Sep-10	17:05:00	8.10
19-Sep-10	17:35:00	8.07
19-Sep-10	18:05:00	8.06
19-Sep-10	18:35:00	8.12
19-Sep-10	19:05:00	7.84
19-Sep-10	19:35:00	10.19
19-Sep-10	20:05:00	9.14
19-Sep-10	20:35:00	8.58
19-Sep-10	21:05:00	8.35
19-Sep-10	21:35:00	8.25
19-Sep-10	22:05:00	8.24
19-Sep-10	22:35:00	8.18
19-Sep-10	23:05:00	8.13
19-Sep-10	23:35:00	8.13
20-Sep-10	0:05:00	8.13
20-Sep-10	0:35:00	8.13
20-Sep-10	1:05:00	8.16
20-Sep-10	1:35:00	8.11
20-Sep-10	2:05:00	8.12
20-Sep-10	2:35:00	8.10
20-Sep-10	3:05:00	8.05
20-Sep-10	3:35:00	8.12
20-Sep-10	4:05:00	8.10
20-Sep-10	4:35:00	8.15
20-Sep-10	5:05:00	8.14
20-Sep-10	5:35:00	8.13
20-Sep-10	6:05:00	8.13
20-Sep-10	6:35:00	8.13
20-Sep-10	7:05:00	8.12
20-Sep-10	7:35:00	8.10
20-Sep-10	8:05:00	8.03
20-Sep-10	8:35:00	8.00
20-Sep-10	9:05:00	7.75
20-Sep-10	9:35:00	7.68
20-Sep-10	10:00:00	8.67

RECEIVED
OCT 25 2010
DIVISION OF
ENVIRONMENTAL COMPLIANCE

METROPOLITAN ST. LOUIS SEWER DISTRICT
2010 INDUSTRIAL USER SELF MONITORING REPORT

PART I: IDENTIFYING INFORMATION

Company Name: **Mallinckrodt Inc.**

Permit No.: 2112059600 - 3 Effective Date: 06-01-2010 Expiration Date: 05-31-2015

Premise Address: 3600 North Second St., St. Louis, MO 63147

Monitoring Period: ____(JAN-MAR) ____(APR-JUNE) __X__(JULY-SEPT) ____(OCT-DEC)

Samples Collected By: Mallinckrodt

Analysis Performed By: TEKLAB

Part II: ANALYTICAL RESULTS OF SELF MONITORING

MSD SAMPLE POINT REFERENCE NUMBERS	----->		010						
DATES ON WHICH SAMPLES WERE COLLECTED	----->		7/16/2010						
TIMES AT WHICH SAMPLES WERE COLLECTED	----->		0655, 0755, 0855, 1000						
PARAMETER	LIMIT	RECORD SAMPLE TYPES (G,C,M OR E) & RESULTS BELOW G=grab,C=composite,M=measured flow,E=estimated flo							UNITS
FLOW		E	1,142,913						gal/day
Oil & Grease	200	G	15						mg/l
Biochemical Oxygen Demand	****	C	407						mg/l
Chemical Oxygen Demand	****	C	934						mg/l
Total Suspended Solids	****	C	70						mg/l
Temperature	60	G	39						deg C
pH	5.5 - 11.5	G	see attached						S.U.
Chromium	5.0	C	0.0195						mg/l
Copper	2.7	C	0.0274						mg/l
Nickel	2.3	C	0.0217						mg/l
Zinc	3.0	C	0.0626						mg/l
Lab Dilution Factor			1						

RECEIVED
OCT 25 2010
DIVISION OF
ENVIRONMENTAL COMPLIANCE

Mallinckrodt pH Monitoring for SP010: July, 2010

Date / Time	pH	Total for Event in Minutes
01-Jul-10 08:45:00	4.1	5
08-Jul-10 10:45:00	4.1	5
11-Jul-10 05:35:00	3.8	5
15-Jul-10 09:00:00	4.6	5
	July Total	**20**

Mallinckrodt pH Monitoring for SP010: August, 2010

Date / Time	pH	Total for Event in Minutes
05-Aug-10 08:50:00	4.0	5
20-Aug-10 11:35:00	4.9	5
27-Aug-10 08:45:00	4.2	5
	August Total:	**15**

Mallinckrodt pH Monitoring for SP010: September, 2010

Date / Time	pH	Total for Event in Minutes
03-Sep-10 10:35:00	4.1	5
15-Sep-10 10:10:00	5.2	5
26-Sep-10 03:00:00	5.4	5
	September Total:	**15**

RECEIVED
OCT 25 2010
DIVISION OF
ENVIRONMENTAL COMPLIANCE

METROPOLITAN ST. LOUIS SEWER DISTRICT
2010 INDUSTRIAL USER SELF MONITORING REPORT

PART I: IDENTIFYING INFORMATION

Company Name: **Mallinckrodt Inc.**

Permit No.: 2112059600 - 3 Effective Date: 06-01-2010 Expiration Date: 05-31-2015

Premise Address: 3600 North Second St., St. Louis, MO 63147

Monitoring Period: ___(JAN-MAR) ____(APR-JUNE) __X__(JULY-SEPT) ____(OCT-DEC)

Samples Collected By: Mallinckrodt

Analysis Performed By: TEKLAB

Part II: ANALYTICAL RESULTS OF SELF MONITORING

MSD SAMPLE POINT REFERENCE NUMBERS	------>		011					
DATES ON WHICH SAMPLES WERE COLLECTED	------>		9/18/2010					
TIMES AT WHICH SAMPLES WERE COLLECTED	------>		0800					
PARAMETER	LIMIT	RECORD SAMPLE TYPES (G,C,M OR E) & RESULTS BELOW G=grab,C=composite,M=measured flow,E=estimated flo						UNITS
FLOW		E	14,000					gal/day
Oil & Grease	200	G	<6					mg/l
Biochemical Oxygen Demand	****	G	6					mg/l
Chemical Oxygen Demand	****	G	38					mg/l
Total Suspended Solids	****	G	5					mg/l
Temperature	60	G	24.8					deg C
pH	5.5 - 11.5	G	7.9					S.U.
Lab Dilution Factor			1					

RECEIVED

OCT 25 2010

DIVISION OF
ENVIRONMENTAL COMPLIANCE

METROPOLITAN ST. LOUIS SEWER DISTRICT
2010 INDUSTRIAL USER SELF MONITORING REPORT

PART I: IDENTIFYING INFORMATION

Company Name: **Mallinckrodt Inc.**

Permit No.: 2112059600 - 3 Effective Date: 06-01-2010 Expiration Date: 05-31-2015

Premise Address: 3600 North Second St., St. Louis, MO 63147

Monitoring Period: ____(JAN-MAR) _____(APR-JUNE) __X__(JULY-SEPT) ____(OCT-DEC)

Samples Collected By: Mallinckrodt

Analysis Performed By: TEKLAB

Part II: ANALYTICAL RESULTS OF SELF MONITORING

MSD SAMPLE POINT REFERENCE NUMBERS	----->		011					
DATES ON WHICH SAMPLES WERE COLLECTED	----->		9/18/2010					
TIMES AT WHICH SAMPLES WERE COLLECTED	----->		0800					
PARAMETER	LIMIT	RECORD SAMPLE TYPES (G,C,M OR E) & RESULTS BELOW G=grab,C=composite,M=measured flow,E=estimated flo						UNITS
FLOW		E	14,000					gal/day
1,1,1-Trichloroethane		G	<0.005					mg/l
1,1,2,2-Tetrachloroethane		G	<0.005					mg/l
1,1,2-Trichloroethane		G	<0.005					mg/l
1,1-Dichloroethane		G	<0.005					mg/l
1,1-Dichloroethene		G	<0.005					mg/l
1,2-Dichlorobenzene		G	<0.005					mg/l
1,2-Dichloroethane		G	<0.005					mg/l
1,2-Dichloropropane		G	<0.005					mg/l
1,3-Dichlorobenzene		G	<0.005					mg/l
1,4-Dichlorobenzene		G	<0.005					mg/l
2-Chloroethylvinylether		G	<0.020					mg/l
Acrolein		G	<0.100					mg/l
Acrylonitrile		G	<0.005					mg/l
Benzene		G	<0.002					mg/l
Bromodichloromethane		G	0.0011					mg/l
Bromoform		G	<0.005					mg/l
Bromomethane		G	<0.010					mg/l
Carbon Tetrachloride		G	<0.005					mg/l
Chlorobenzene		G	<0.005					mg/l
Chloroethane		G	<0.010					mg/l
Chloroform		G	0.0059					mg/l
Chloromethane		G	<0.010					mg/l
cis-1,3-Dicholropropene		G	<0.005					mg/l
Dibromochloromethane		G	<0.005					mg/l
Ethylbenzene		G	<0.005					mg/l
Methylene Chloride		G	<0.005					mg/l
Tetrachloroethene		G	<0.005					mg/l
Toluene		G	<0.002					mg/l
trans-1,2-Dichloroethene		G	<0.005					mg/l
trans-1,3-Dichloropropene		G	<0.005					mg/l
Trichloroethene		G	<0.005					mg/l
Vinyl Chloride		G	<0.002					mg/l
1,2,4-Trichlorobenzene		G	<0.009					mg/l
2,4,6-Trichlorophenol		G	<0.009					mg/l
2,4-Dichlorophenol		G	<0.009					mg/l
2,4-Dimethylphenol		G	<0.009					mg/l
2,4-Dinitrophenol		G	<0.017					mg/l
2,4-Dinitrotoluene		G	<0.009					mg/l
2,6-Dinitrotoluene		G	<0.009					mg/l
2-Chloronapthalene		G	<0.009					mg/l
2-Chlorophenol		G	<0.009					mg/l
2-Nitrophenol		G	<0.017					mg/l
3,3-Dichlorobenzidine		G	<0.009					mg/l
2-Methyl-4,6-dinitrophenol		G	<0.017					mg/l
4-Bromophenyl-phenylether		G	<0.009					mg/l
4-Chloro-3-methylphenol		G	<0.017					mg/l
4-Chlorophenyl-phenylether		G	<0.009					mg/l
4-Nitrophenol		G	<0.017					mg/l
Acenapthene		G	<0.009					mg/l
Acenaphthylene		G	<0.009					mg/l
Anthracene		G	<0.009					mg/l
Benzidine		G	<0.034					mg/l
Benzo(a)anthracene		G	<0.009					mg/l

RECEIVED
OCT 25 2010
DIVISION OF
ENVIRONMENTAL COMPLIANCE

METROPOLITAN ST. LOUIS SEWER DISTRICT
2010 INDUSTRIAL USER SELF MONITORING REPORT

PART I: IDENTIFYING INFORMATION

Company Name: **Mallinckrodt Inc.**

Permit No.: 2112059600 - 3 Effective Date: 06-01-2010 Expiration Date: 05-31-2015

Premise Address: 3600 North Second St., St. Louis, MO 63147

Monitoring Period: ____(JAN-MAR) _____(APR-JUNE) __X__(JULY-SEPT) ____(OCT-DEC)

Samples Collected By: Mallinckrodt

Analysis Performed By: TEKLAB

Part II: ANALYTICAL RESULTS OF SELF MONITORING

MSD SAMPLE POINT REFERENCE NUMBERS	----->		011					
DATES ON WHICH SAMPLES WERE COLLECTED	----->		9/18/2010					
TIMES AT WHICH SAMPLES WERE COLLECTED	----->		0800					
PARAMETER	LIMIT	RECORD SAMPLE TYPES (G,C,M OR E) & RESULTS BELOW G=grab,C=composite,M=measured flow,E=estimated flo						UNITS
FLOW		E	14,000					gal/day
Benzo(a)pyrene		G	<0.009					mg/l
Benzo(b)fluoranthene		G	<0.009					mg/l
Benzo(g,h,i)perylene		G	<0.009					mg/l
Benzo(k)fluoranthene		G	<0.009					mg/l
Bis(2-chloroethoxy)methane		G	<0.009					mg/l
Bis(2-chloroethyl)ether		G	<0.009					mg/l
Bis(2-chloroisopropyl)ether		G	<0.009					mg/l
Bis(2-ethylhexyl)phthalate		G	<0.005					mg/l
Butyl benzyl phthalate		G	<0.009					mg/l
Chrysene		G	<0.009					mg/l
Dibenzo(a,h)anthracene		G	<0.009					mg/l
Diethyl phthalate		G	<0.009					mg/l
Dimethyl phthalate		G	<0.009					mg/l
Di-n-butyl phthalate		G	<0.009					mg/l
Di-n-octyl-phthalate		G	<0.009					mg/l
Fluoranthene		G	<0.009					mg/l
Fluorene		G	<0.009					mg/l
Hexachlorobenzene		G	<0.009					mg/l
Hexachlorobutadiene		G	<0.009					mg/l
Hexachlorocyclopentadiene		G	<0.017					mg/l
Hexachloroethane		G	<0.009					mg/l
Ideno(1,2,3-cd)pyrene		G	<0.009					mg/l
Isophorone		G	<0.009					mg/l
Naphthalene		G	<0.009					mg/l
Nitrobenzene		G	<0.009					mg/l
N-nitrosodimethylamine		G	<0.017					mg/l
N-nitrosodi-n-propylamine		G	<0.009					mg/l
N-nitrosodiphenylamine		G	<0.009					mg/l
Pentachlorophenol		G	<0.017					mg/l
Phenanthrene		G	<0.009					mg/l
Phenol		G	<0.004					mg/l
Pyrene		G	<0.009					mg/l
1,2-Diphenylhydrazine		G	<0.009					mg/l
Total Toxic Organics	5.844	--	0.839					mg/l
Lab Dilution Factor			1					

RECEIVED
OCT 25 2010
DIVISION OF
ENVIRONMENTAL COMPLIANCE

Mallinckrodt pH Monitoring Data for SP011: Planned Electrical Shutdown Overflow

September 18, 2009 - September 20, 2010

Date	Time	pH
18-Sep-10	8:00:00	7.88
18-Sep-10	8:30:00	8.17
18-Sep-10	9:00:00	8.30
18-Sep-10	9:30:00	8.44
18-Sep-10	10:00:00	8.48
18-Sep-10	10:30:00	8.44
18-Sep-10	11:00:00	8.40
18-Sep-10	11:30:00	8.42
18-Sep-10	12:00:00	8.39
18-Sep-10	12:30:00	8.40
18-Sep-10	13:00:00	8.41
18-Sep-10	13:30:00	8.45
18-Sep-10	14:00:00	8.30
18-Sep-10	14:30:00	8.30
18-Sep-10	15:00:00	8.23
18-Sep-10	15:30:00	8.28
18-Sep-10	16:00:00	8.30
18-Sep-10	16:30:00	8.30
18-Sep-10	17:00:00	8.22
18-Sep-10	17:30:00	8.38
18-Sep-10	18:00:00	8.43
18-Sep-10	18:30:00	8.50
18-Sep-10	19:00:00	8.54
18-Sep-10	19:30:00	8.49
18-Sep-10	20:00:00	8.61
18-Sep-10	20:30:00	8.62
18-Sep-10	21:00:00	8.69
18-Sep-10	21:30:00	8.66
18-Sep-10	22:00:00	8.67
18-Sep-10	22:30:00	8.72
18-Sep-10	23:00:00	8.73
18-Sep-10	#REF!	8.75
19-Sep-10	0:15:00	7.03
19-Sep-10	0:45:00	6.62
19-Sep-10	1:15:00	9.36
19-Sep-10	1:45:00	8.74
19-Sep-10	2:15:00	8.40
19-Sep-10	2:45:00	8.16
19-Sep-10	3:15:00	8.06
19-Sep-10	3:45:00	7.96
19-Sep-10	4:15:00	7.89
19-Sep-10	4:45:00	7.76
19-Sep-10	5:15:00	7.12
19-Sep-10	5:45:00	7.70
19-Sep-10	6:15:00	7.67
19-Sep-10	6:45:00	7.78
19-Sep-10	7:15:00	7.80
19-Sep-10	7:45:00	7.78
19-Sep-10	8:00:00	7.74
19-Sep-10	8:30:00	7.54
19-Sep-10	9:00:00	7.57
19-Sep-10	9:30:00	7.32
19-Sep-10	10:00:00	7.55

RECEIVED
OCT 2 4 2010
DIVISION OF
ENVIRONMENTAL COMPLIANCE

Mallinckrodt pH Monitoring Data for SP011: Planned Electrical Shutdown Overflow		
September 18, 2009 - September 20, 2010		
Date	Time	pH
19-Sep-10	10:30:00	7.65
19-Sep-10	11:00:00	7.56
19-Sep-10	11:30:00	7.32
19-Sep-10	12:00:00	7.33
19-Sep-10	12:30:00	7.37
19-Sep-10	13:00:00	7.94
19-Sep-10	13:30:00	7.92
19-Sep-10	14:00:00	7.71
19-Sep-10	14:30:00	7.66
19-Sep-10	15:00:00	7.69
19-Sep-10	15:30:00	7.73
19-Sep-10	16:00:00	7.78
19-Sep-10	16:30:00	7.84
19-Sep-10	17:00:00	7.89
19-Sep-10	17:30:00	7.85
19-Sep-10	18:00:00	7.82
19-Sep-10	18:30:00	7.90
19-Sep-10	19:00:00	7.89
19-Sep-10	19:30:00	7.93
19-Sep-10	20:00:00	7.96
19-Sep-10	20:30:00	7.96
19-Sep-10	21:00:00	7.98
19-Sep-10	21:30:00	8.04
19-Sep-10	22:00:00	8.06
19-Sep-10	22:30:00	8.07
19-Sep-10	23:00:00	8.03
19-Sep-10	23:30:00	7.98
20-Sep-10	0:00:00	8.05
20-Sep-10	0:30:00	8.04
20-Sep-10	1:00:00	8.07
20-Sep-10	1:30:00	8.08
20-Sep-10	2:00:00	8.08
20-Sep-10	2:30:00	8.11
20-Sep-10	3:00:00	8.14
20-Sep-10	3:30:00	8.13
20-Sep-10	4:00:00	8.13
20-Sep-10	4:30:00	8.15
20-Sep-10	5:00:00	8.17
20-Sep-10	5:30:00	8.18
20-Sep-10	6:00:00	8.16
20-Sep-10	6:30:00	8.21
20-Sep-10	7:00:00	8.24
20-Sep-10	7:30:00	8.20
20-Sep-10	8:00:00	8.18
20-Sep-10	8:30:00	8.24
20-Sep-10	9:00:00	8.19
20-Sep-10	9:30:00	8.95

RECEIVED

OCT 25 2010

DIVISION OF
ENVIRONMENTAL COMPLIANCE

METROPOLITAN ST. LOUIS SEWER DISTRICT
2010 INDUSTRIAL USER SELF MONITORING REPORT

PART I: IDENTIFYING INFORMATION

Company Name: **Mallinckrodt Inc.**

Permit No.: 2112059600 - 3 Effective Date: 06-01-2010 Expiration Date: 05-31-2015

Premise Address: 3600 North Second St., St. Louis, MO 63147
Monitoring Period: _____(JAN-MAR) _____(APR-JUN) __X__(JULY-SEP) _____(OCT-DEC)
Samples Collected By: Mallinckrodt Inc
Analysis Performed By: TEKLAB

Part II: ANALYTICAL RESULTS OF SELF MONITORING

MSD SAMPLE POINT REFERENCE NUMBERS					**080**					
DATES ON WHICH SAMPLES WERE COLLECTED										
TIMES AT WHICH SAMPLES WERE COLLECTED										
PARAMETER	EPA METHOD	DAILY MAX	AVG MONTHLY	**RECORD SAMPLE TYPES (G, C, M OR E) & RESULTS** G=Grab, C-composite, M=measured flow, E=estimated						UNITS
FLOW				E	*					gal/day
Acetone	524.2	20.70	8.20	G						mg/L
n-Amyl Acetate	1666	20.70	8.20	G						mg/L
Benzene	524.2	3.00	0.70	G						mg/L
n-Butyl acetate	1666	20.70	8.20	G						mg/L
Chlorobenzene	524.2	3.00	0.70	G						mg/L
Chloroform	524.2	0.10	0.03	G						mg/L
1,2-Dichlorobenzene	524.2	20.70	8.20	G						mg/L
1,2-Dichloroethane	524.2	20.70	8.20	G						mg/L
Diethyl amine	1671	255.00	100.00	G						mg/L
Ethyl Acetate	1666	20.70	8.20	G						mg/L
n-Heptane	1666	3.00	0.70	G						mg/L
n-Hexane	1666	3.00	0.70	G						mg/L
Isobutyraldehyde	1666	20.70	8.20	G						mg/L
Isopropyl acetate	1666	20.70	8.20	G						mg/L
Isopropyl ether	1666	20.70	8.20	G						mg/L
Methylene chloride	524.2	3.00	0.70	G						mg/L
Methyl formate	1666	20.70	8.20	G						mg/L
4-Methyl-2-pentanone	1666	20.70	8.20	G						mg/L
Tetrahydrofuran	1666	9.20	3.40	G						mg/L
Toluene	524.2	0.30	0.20	G						mg/L
Triethyl amine	1671	255.00	100.00	G						mg/L
Xylenes	1666	3.00	0.70	G						mg/L
Oil & Grease	1664	200		G						mg/L
Biochemical Oxygen Demand		****		C						mg/L
Chemical Oxygen Demand		****		C						mg/L
Total Suspended Solids		****		C						mg/L
Temperature		60		G						deg C
pH		5.5 - 11.5		G						S.U.
* NO FLOW FROM THIS OUTFALL THIS QUARTER										
Dilution by lab										

RECEIVED
OCT 25 2010
DIVISION OF
ENVIRONMENTAL COMPLIANCE

METROPOLITAN ST. LOUIS SEWER DISTRICT
2010 INDUSTRIAL USER SELF MONITORING REPORT

PART I: IDENTIFYING INFORMATION

Company Name: **Mallinckrodt Inc.**

Permit No.: 2112059600 - 3 Effective Date: 06-01-2010 Expiration Date: 05-31-2015

Premise Address: 3600 North Second St., St. Louis, MO 63147

Monitoring Period: ____(JAN-MAR) _____ (APR-JUNE) __X__(JULY-SEPT) _____(OCT-DEC)

Samples Collected By: Mallinckrodt

Analysis Performed By: TEKLAB

Part II: ANALYTICAL RESULTS OF SELF MONITORING

MSD SAMPLE POINT REFERENCE NUMBERS		---->		**905**			
DATES ON WHICH SAMPLES WERE COLLECTED		---->		7/12/2010			
TIMES AT WHICH SAMPLES WERE COLLECTED		---->		13:15			
PARAMETER	MONTHLY LIMIT (ave) (gm/day)	DAILY MAX LIMIT (gm/day)	**RECORD SAMPLE TYPES (G,C,M OR E) & RESULTS BELOW** G=grab,C=composite,M=measured flow,E=estimated flow		Lab results mg/L		UNITS
FLOW			M	95500			gal/day
1,2,4-Trichlorobenzene	74	301	G	36.15	0.100		gm/day
1,2-Dichlorobenzene	74	301	G	1.81	0.005		gm/day
1,3-Dichlorobenzene	54	144	G	1.81	0.005		gm/day
1,4-Dichlorobenzene	54	144	G	1.81	0.005		gm/day
2-Nitrophenol	25	87	G	18.07	0.050		gm/day
2-Methyl-4,6-dinitrophenol	30	105	G	18.07	0.050		gm/day
4-Nitrophenol	61	218	G	36.15	0.100		gm/day
Acenapthene	7	18	G	3.61	0.010		gm/day
Anthracene	7	18	G	3.61	0.010		gm/day
Bis(2-ethylhexyl)phthalate	36	98	G	21.69	0.060		gm/day
Diethyl phthalate	17	43	G	3.61	0.010		gm/day
Dimethyl phthalate	7	18	G	3.61	0.010		gm/day
Di-n-butyl phthalate	8	16	G	3.61	0.010		gm/day
Fluoranthene	8	20	G	3.61	0.010		gm/day
Fluorene	7	18	G	3.61	0.010		gm/day
Hexachlorobenzene	74	301	G	36.15	0.100		gm/day
Hexachlorobutadiene	54	144	G	36.15	0.100		gm/day
Hexachloroethane	74	301	G	36.15	0.100		gm/day
Naphthalene	7	18	G	3.61	0.010		gm/day
Phenanthrene	7	18	G	3.61	0.010		gm/day
Pyrene	8	18	G	3.61	0.010		gm/day
1,1,1-Trichloroethane	8	22	G	1.81	0.005		gm/day
1,1,2-Trichloroethane	12	48	G	1.81	0.005		gm/day
1,1-Dichloroethane	8	22	G	1.81	0.005		gm/day
1,1-Dichloroethene	8	23	G	1.81	0.005		gm/day
1,2-Dichloroethane	74	301	G	1.81	0.005		gm/day
1,2-Dichloropropane	74	301	G	1.81	0.005		gm/day
Benzene	22	51	G	0.72	0.002		gm/day
Carbon Tetrachloride	54	144	G	1.81	0.005		gm/day
Chlorobenzene	54	144	G	1.81	0.005		gm/day
Chloroethane	42	112	G	3.61	0.010		gm/day
Chloroform	42	123	G	1.81	0.005		gm/day
Chloromethane	42	112	G	3.61	0.010		gm/day
cis-1,3-Dichloropropene	74	301	G	1.81	0.005		gm/day
Ethylbenzene	54	144	G	1.81	0.005		gm/day
Methylene Chloride	14	64	G	1.81	0.005		gm/day
Nitrobenzene	847	2423	G	36.15	0.100		gm/day
Tetrachloroethene	20	62	G	1.81	0.005		gm/day
Toluene	11	28	G	1.81	0.005		gm/day
trans-1,2-Dichloroethene	9	25	G	1.81	0.005		gm/day
trans-1,3-Dichloropropene	74	301	G	1.81	0.005		gm/day
Trichloroethene	10	26	G	1.81	0.005		gm/day
Vinyl Chloride	37	65	G	0.72	0.002		gm/day
Shaded values represent detection limits							
Lab Dilution Factor				1,10			

RECEIVED

OCT 25 2010

DIVISION OF
ENVIRONMENTAL COMPLIANCE

METROPOLITAN ST. LOUIS SEWER DISTRICT
2010 INDUSTRIAL USER SELF MONITORING REPORT

PART I: IDENTIFYING INFORMATION

Company Name: **Mallinckrodt Inc.**

Permit No.: 2112059600 - 3 Effective Date: 06-01-2010 Expiration Date: 05-31-2015

Premise Address: 3600 North Second St., St. Louis, MO 63147

Monitoring Period: _____(JAN-MAR) _____(APR-JUNE) __X__(JULY-SEPT) _____(OCT-DEC)

Samples Collected By: Mallinckrodt Inc

Analysis Performed By: TEKLAB

Part II: ANALYTICAL RESULTS OF SELF MONITORING

MSD SAMPLE POINT REFERENCE NUMBERS	----->		**912**		**912**		**912**	
DATES ON WHICH SAMPLES WERE COLLECTED	----->		7/5/2010		8/2/2010		9/7/2010	
TIMES AT WHICH SAMPLES WERE COLLECTED	----->		0600		0600		0600	
PARAMETER	LIMIT	**RECORD SAMPLE TYPES (G,C,M OR E) & RESULTS BELOW** G=grab,C=composite,M=measured flow,E=estimated flo						UNITS
FLOW		M	49324	M	83553	M	92947	gal/day
DMAC (daily max)	7091	C	712	C	851	C	868	lb/day
DMAC (monthly average)	5459	C	712	C	851	C	868	lb/day
Lab Dilution Factor			1		1		1	

RECEIVED
OCT 25 2010
DIVISION OF
ENVIRONMENTAL COMPLIANCE

METROPOLITAN ST. LOUIS SEWER DISTRICT
2010 INDUSTRIAL USER SELF MONITORING REPORT

PART I: IDENTIFYING INFORMATION

Company Name: **MALLINCKRODT INC.**
Permit No.: 2112059600 - 3 Effective Date: 06-01-2010 Expiration Date: 05-31-2015
Premise Address: 3600 North Second St., St. Louis, MO 63147
Monitoring Period: ____(JAN-MAR) ____(APR-JUN) __X__(JULY-SEP) ____(OCT-DEC)
Samples Collected By: Mallinckrodt Inc
Analysis Performed By: TEKLAB

Part II: ANALYTICAL RESULTS OF SELF MONITORING

MSD SAMPLE POINT REFERENCE NUMBERS			---->		**915**				
DATES ON WHICH SAMPLES WERE COLLECTED			---->		7/1/2010				
TIMES AT WHICH SAMPLES WERE COLLECTED			---->		09:30				
PARAMETER	EPA METHOD	DAILY MAX	AVG MONTHLY	**RECORD SAMPLE TYPES (G, C, M OR E) & RESULTS BELOW** G=Grab, C-composite, M=measured flow, E=estimated flow					UNITS
FLOW				E	20,000				gal/day
Acetone	524.2	20.70	8.20	G	0.140				mg/L
n-Amyl acetate	1666	20.70	8.20	G	<0.100				mg/L
Benzene	524.2	3.00	0.70	G	<0.100				mg/L
n-Butyl acetate	1666	20.70	8.20	G	<0.100				mg/L
Chlorobenzene	524.2	3.00	0.70	G	<0.100				mg/L
Chloroform	524.2	0.10	0.03	G	<0.020				mg/L
1,2-Dichlorobenzene	524.2	20.70	8.20	G	<0.100				mg/L
1,2-Dichloroethane	524.2	20.70	8.20	G	<0.100				mg/L
Diethyl amine	1671	255.00	100.00	G	*				mg/L
Ethyl Acetate	1666	20.70	8.20	G	<0.200				mg/L
n-Heptane	1666	3.00	0.70	G	<0.200				mg/L
n-Hexane	1666	3.00	0.70	G	<0.200				mg/L
Isobutyraldehyde	1666	20.70	8.20	G	0.028				mg/L
Isopropyl acetate	1666	20.70	8.20	G	<0.100				mg/L
Isopropyl ether	1666	20.70	8.20	G	<0.100				mg/L
Methylene chloride	524.2	3.00	0.70	G	<0.100				mg/L
Methyl formate	1666	20.70	8.20	G	<1				mg/L
4-Methyl-2-pentanone	1666	20.70	8.20	G	<0.200				mg/L
Tetrahydrofuran	1666	9.20	3.40	G	<0.400				mg/L
Toluene	524.2	0.30	0.20	G	<0.100				mg/L
Triethyl amine	1671	255.00	100.00	G	*				mg/L
Xylenes	1666	3.00	0.70	G	<0.100				mg/L
** Annual monitoring requirement.*									
Dilution by lab					20				

RECEIVED
OCT 25 2010
DIVISION OF
ENVIRONMENTAL COMPLIANCE

METROPOLITAN ST. LOUIS SEWER DISTRICT
2010 INDUSTRIAL USER SELF MONITORING REPORT

PART I: IDENTIFYING INFORMATION

Company Name: **MALLINCKRODT INC.**
Permit No.: 2112059600 - 3 Effective Date: 06-01-2010 Expiration Date: 05-31-15
Premise Address: 3600 North Second St., St. Louis, MO 63147
Monitoring Period: ____(JAN-MAR) ____(APR-JUN) __X__(JULY-SEP) ____(OCT-DEC)
Samples Collected By: Mallinckrodt Inc
Analysis Performed By: TEKLAB

Part II: ANALYTICAL RESULTS OF SELF MONITORING

MSD SAMPLE POINT REFERENCE NUMBERS			---->		**920**					
DATES ON WHICH SAMPLES WERE COLLECTED			---->		7/21/2010					
TIMES AT WHICH SAMPLES WERE COLLECTED			---->		14:05					
PARAMETER	EPA METHOD	DAILY MAX	AVG MONTHLY	**RECORD SAMPLE TYPES (G, C, M OR E) & RESULTS BELOW** G=Grab, C-composite, M=measured flow,						UNITS
FLOW				E	13,000	E				gal/day
Tetrahydrofuran	1666	9.20	3.40	G	<0.400	G				mg/L
Toluene	524.2	0.30	0.20	G	0.014	G				mg/L
Dilution by lab					20					

RECEIVED
OCT 25 2010
DIVISION OF
ENVIRONMENTAL COMPLIANCE

METROPOLITAN ST. LOUIS SEWER DISTRICT
2010 INDUSTRIAL USER SELF MONITORING REPORT

PART I: IDENTIFYING INFORMATION

Company Name: **MALLINCKRODT INC.**
Permit No.: 2112059600 - 3 Effective Date: 06-01-2010 Expiration Date: 05-31-2015
Premise Address: 3600 North Second St., St. Louis, MO 63147
Monitoring Period: ____(JAN-MAR) ____(APR-JUN) __X__(JULY-SEP) ___(OCT-DEC)
Samples Collected By: Mallinckrodt Inc
Analysis Performed By: TEKLAB

Part II: ANALYTICAL RESULTS OF SELF MONITORING

MSD SAMPLE POINT REFERENCE NUMBERS			---->		**927**				
DATES ON WHICH SAMPLES WERE COLLECTED			---->		7/1/2010				
TIMES AT WHICH SAMPLES WERE COLLECTED			---->		13:20				
PARAMETER	EPA METHOD	DAILY MAX	AVG MONTHLY	**RECORD SAMPLE TYPES (G, C, M OR E) & RESULTS BELOW** G=Grab, C-composite, M=measured flow,					UNITS
FLOW				E	2,200				gal/day
Acetone	524.2	20.70	8.20	G	<1				mg/L
n-Amyl acetate	1666	20.70	8.20	G	<0.100				mg/L
Ethyl Acetate	1666	20.70	8.20	G	<0.200				mg/L
Isopropyl acetate	1666	20.70	8.20	G	<0.100				mg/L
Methylene chloride	524.2	3.00	0.70	G	<0.100				mg/L
Dilution by lab					20				

RECEIVED
OCT 25 2010
DIVISION OF
ENVIRONMENTAL COMPLIANCE

METROPOLITAN ST. LOUIS SEWER DISTRICT
2010 INDUSTRIAL USER SELF MONITORING REPORT

PART I: IDENTIFYING INFORMATION

Company Name: **MALLINCKRODT INC.**
Permit No.: 2112059600 - 3 Effective Date: 06-01-2010 Expiration Date: 05-31-2015
Premise Address: 3600 North Second St., St. Louis, MO 63147
Monitoring Period: ____(JAN-MAR) ____(APR-JUN) __X__(JULY-SEP) _____(OCT-DEC)
Samples Collected By: Mallinckrodt Inc
Analysis Performed By: TEKLAB

Part II: ANALYTICAL RESULTS OF SELF MONITORING

MSD SAMPLE POINT REFERENCE NUMBERS					**930**						
DATES ON WHICH SAMPLES WERE COLLECTED					7/19/2010						
TIMES AT WHICH SAMPLES WERE COLLECTED					10:30						
PARAMETER	EPA METHOD	DAILY MAX	AVG MONTHLY	**RECORD SAMPLE TYPES (G, C, M OR E) & RESULTS BELOW** G=Grab, C-composite, M=measured flow, E=estimated flow							UNITS
FLOW				E	2200						gal/day
Acetone	524.2	20.70	8.20	G	<1.000						mg/L
Ethyl Acetate	1666	20.70	8.20	G	<0.200						mg/L
Isopropyl acetate	1666	20.70	8.20	G	<0.100						mg/L
Methylene chloride	524.2	3.00	0.70	G	<0.100						mg/L
n-Amyl acetate	1666	20.70	8.20	G	<0.100						mg/L
Dilution by lab					20						

RECEIVED
OCT 25 2010
DIVISION OF
ENVIRONMENTAL COMPLIANCE

METROPOLITAN ST. LOUIS SEWER DISTRICT
2010 INDUSTRIAL USER SELF MONITORING REPORT

PART I: IDENTIFYING INFORMATION

Company Name: **MALLINCKRODT INC.**
Permit No.: 2112059600 - 3 Effective Date: 06-01-2010 Expiration Date: 05-31-2015
Premise Address: 3600 North Second St., St. Louis, MO 63147
Monitoring Period: _____(JAN-MAR) _____(APR-JUN) __X__(JULY-SEP) _____(OCT-DEC)
Samples Collected By: Mallinckrodt Inc
Analysis Performed By: TEKLAB

Part II: ANALYTICAL RESULTS OF SELF MONITORING

MSD SAMPLE POINT REFERENCE NUMBERS			---->		**933**							
DATES ON WHICH SAMPLES WERE COLLECTED			---->		7/16/2010							
TIMES AT WHICH SAMPLES WERE COLLECTED			---->		07:35							
PARAMETER	EPA METHOD	DAILY MAX	AVG MONTHLY	**RECORD SAMPLE TYPES (G, C, M OR E) & RESULTS BELOW** G=Grab, C-composite, M=measured flow, E=estimated flow								UNITS
FLOW				E	3,000							gal/day
Acetone	524.2	20.70	8.20	G	0.800							mg/L
n-Amyl acetate	1666	20.70	8.20	G	<0.100							mg/L
Ethyl Acetate	1666	20.70	8.20	G	<0.200							mg/L
Isopropyl acetate	1666	20.70	8.20	G	<0.100							mg/L
Methylene chloride	524.2	3.00	0.70	G	<0.100							mg/L
Dilution by lab					20							

RECEIVED
OCT 25 2010
DIVISION OF
ENVIRONMENTAL COMPLIANCE

METROPOLITAN ST. LOUIS SEWER DISTRICT
2010 INDUSTRIAL USER SELF MONITORING REPORT

PART I: IDENTIFYING INFORMATION

Company Name: **MALLINCKRODT INC.**

Permit No.: 2112059600 - 3 Effective Date: 06-01-2010 Expiration Date: 05-31-2015

Premise Address: 3600 North Second St., St. Louis, MO 63147

Monitoring Period: ____(JAN-MAR) ____(APR-JUN) __X__(JULY-SEP) ____(OCT-DEC)

Samples Collected By: Mallinckrodt Inc

Analysis Performed By: TEKLAB

Part II: ANALYTICAL RESULTS OF SELF MONITORING

MSD SAMPLE POINT REFERENCE NUMBERS			---->		**935**						
DATES ON WHICH SAMPLES WERE COLLECTED			---->								
TIMES AT WHICH SAMPLES WERE COLLECTED			---->								
PARAMETER	EPA METHOD	DAILY MAX	AVG MONTHLY	**RECORD SAMPLE TYPES (G, C, M OR E) & RESULTS BELOW** G=Grab, C-composite, M=measured flow, E=estimated flow							UNITS
FLOW				E	0						gal/day
Acetone	524.2	20.70	8.20	G	*						mg/L
Benzene	524.2	3.00	0.70	G	*						mg/L
Chlorobenzene	524.2	3.00	0.70	G	*						mg/L
Chloroform	524.2	0.10	0.03	G	*						mg/L
1,2-Dichlorobenzene	524.2	20.70	8.20	G	*						mg/L
1,2-Dichloroethane	524.2	20.70	8.20	G	*						mg/L
Ethyl Acetate	1666	20.70	8.20	G	*						mg/L
n-Hexane	1666	3.00	0.70	G	*						mg/L
Methylene chloride	524.2	3.00	0.70	G	*						mg/L
4-Methyl-2-pentanone	1666	20.70	8.20	G	*						mg/L
Tetrahydrofuran	1666	9.20	3.40	G	*						mg/L
Toluene	524.2	0.30	0.20	G	*						mg/L
Xylenes	1666	3.00	0.70	G	*						mg/L
Isobutyraldehyde	1666	20.70	8.20	G	*						mg/L
n-Amyl acetate	1666	20.70	8.20	G	*						mg/L
n-Butyl acetate	1666	20.70	8.20	G	*						mg/L
Isopropyl acetate	1666	20.70	8.20	G	*						mg/L
Isopropyl ether	1666	20.70	8.20	G	*						mg/L
n-Heptane	1666	3.00	0.70	G	*						mg/L
Methyl formate	1666	20.70	8.20	G	*						mg/L
Diethyl amine	1671	255.00	100.00	G	*						mg/L
Triethyl amine	1671	255.00	100.00	G	*						mg/L
**** No PEG flow this quarter***											
Dilution by lab											

RECEIVED

OCT 25 2010

DIVISION OF
ENVIRONMENTAL COMPLIANCE

METROPOLITAN ST. LOUIS SEWER DISTRICT
2010 INDUSTRIAL USER SELF MONITORING REPORT

PART I: IDENTIFYING INFORMATION

Company Name: **MALLINCKRODT INC.**
Permit No.: 2112059600 - 3 Effective Date: 06-01-2010 Expiration Date: 05-31-2015
Premise Address: 3600 North Second St., St. Louis, MO 63147
Monitoring Period: ____(JAN-MAR) _____(APR-JUN) __X__(JULY-SEP) ____(OCT-DEC)
Samples Collected By: Mallinckrodt Inc
Analysis Performed By: TEKLAB

Part II: ANALYTICAL RESULTS OF SELF MONITORING

MSD SAMPLE POINT REFERENCE NUMBERS			---->		**936**					
DATES ON WHICH SAMPLES WERE COLLECTED			---->		7/6/2010					
TIMES AT WHICH SAMPLES WERE COLLECTED			---->		7:14					
PARAMETER	EPA METHOD	DAILY MAX	AVG MONTHLY	**RECORD SAMPLE TYPES (G, C, M OR E) &** G=Grab, C-composite, M=measured flow, E=estimated flow						UNITS
FLOW				E	14,400					gal/day
Acetone	524.2	20.70	8.20	G	<1					mg/L
n-Amyl acetate	1666	20.70	8.20	G	<0.100					mg/L
Benzene	524.2	3.00	0.70	G	<0.100					mg/L
n-Butyl acetate	1666	20.70	8.20	G	<0.100					mg/L
Chlorobenzene	524.2	3.00	0.70	G	<0.100					mg/L
Chloroform*	524.2	0.10	0.03	G	<0.020					mg/L
1,2-Dichlorobenzene	524.2	20.70	8.20	G	<0.100					mg/L
1,2-Dichloroethane	524.2	20.70	8.20	G	<0.100					mg/L
Diethyl amine	1671	255.00	100.00	G	*					mg/L
Ethyl Acetate	1666	20.70	8.20	G	<0.200					mg/L
n-Heptane	1666	3.00	0.70	G	<0.200					mg/L
n-Hexane	1666	3.00	0.70	G	<0.200					mg/L
Isobutyraldehyde	1666	20.70	8.20	G	<0.200					mg/L
Isopropyl acetate	1666	20.70	8.20	G	<0.100					mg/L
Isopropyl ether	1666	20.70	8.20	G	<0.100					mg/L
Methylene chloride	524.2	3.00	0.70	G	<0.100					mg/L
Methyl formate	1666	20.70	8.20	G	<1					mg/L
4-Methyl-2-pentanone	1666	20.70	8.20	G	<0.200					mg/L
Tetrahydrofuran	1666	9.20	3.40	G	<0.400					mg/L
Toluene	524.2	0.30	0.20	G	<0.100					mg/L
Triethyl amine	1671	255.00	100.00	G	*					mg/L
Xylenes	1666	3.00	0.70	G	<0.100					mg/L
* Chloroform Results	Raw Water	SP936								
7/6/2010	<0.020 mg/l	<0.020 mg/l								
Results above reported as the difference between SP936 and Raw Water.										
Dilution by lab					20					

RECEIVED
OCT 25 2010
DIVISION OF
ENVIRONMENTAL COMPLIANCE

METROPOLITAN ST. LOUIS SEWER DISTRICT
2010 INDUSTRIAL USER SELF MONITORING REPORT

PART I: IDENTIFYING INFORMATION

Company Name: **MALLINCKRODT INC.**
Permit No.: 2112059600 - 3 Effective Date: 06-01-2010 Expiration Date: 05-31-2015
Premise Address: 3600 North Second St., St. Louis, MO 63147
Monitoring Period: ____(JAN-MAR) ____(APR-JUN) __X__(JULY-SEP) ____(OCT-DEC)
Samples Collected By: Mallinckrodt Inc
Analysis Performed By: TEKLAB

Part II: ANALYTICAL RESULTS OF SELF MONITORING

MSD SAMPLE POINT REFERENCE NUMBERS			---->		**937**				
DATES ON WHICH SAMPLES WERE COLLECTED			---->		7/16/2010				
TIMES AT WHICH SAMPLES WERE COLLECTED			---->		9:45				
PARAMETER	EPA METHOD	DAILY MAX	AVG MONTHLY	**RECORD SAMPLE TYPES (G, C, M OR E) & RESULTS BELOW** G=Grab, C-composite, M=measured flow, E=estimated flow					UNITS
FLOW				E	22,000				gal/day
Tetrahydrofuran	524.2	9.20	3.40	G	<0.400				mg/L
Toluene	524.2	0.30	0.20	G	<0.100				mg/L
Dilution by lab					20				

RECEIVED
OCT 25 2010
DIVISION OF
ENVIRONMENTAL COMPLIANCE

METROPOLITAN ST. LOUIS SEWER DISTRICT
2010 INDUSTRIAL USER SELF MONITORING REPORT

PART I: IDENTIFYING INFORMATION

Company Name: **MALLINCKRODT INC.**
Permit No.: 2112059600 - 3 Effective Date: 06-01-2010 Expiration Date: 05-31-2015
Premise Address: 3600 North Second St., St. Louis, MO 63147
Monitoring Period: _____(JAN-MAR) ____(APR-JUN) __X__(JULY-SEP) ____(OCT-DEC)
Samples Collected By: Mallinckrodt Inc
Analysis Performed By: TEKLAB

Part II: ANALYTICAL RESULTS OF SELF MONITORING

MSD SAMPLE POINT REFERENCE NUMBERS			---->		**938**							
DATES ON WHICH SAMPLES WERE COLLECTED			---->		7/2/2010							
TIMES AT WHICH SAMPLES WERE COLLECTED			---->		11:00							
PARAMETER	EPA METHOD	DAILY MAX	AVG MONTHLY	**RECORD SAMPLE TYPES (G, C, M OR E) & RESULTS BELOW** G=Grab, C-composite, M=measured flow, E=estimated flow								UNITS
FLOW				E	3,000							gal/day
Acetone	524.2	20.70	8.20	G	<1							mg/L
n-Amyl acetate	1666	20.70	8.20	G	<0.100							mg/L
Ethyl Acetate	1666	20.70	8.20	G	<0.200							mg/L
Isopropyl acetate	1666	20.70	8.20	G	<0.100							mg/L
Methylene chloride	524.2	3.00	0.70	G	<0.100							mg/L
Dilution by lab					20							

RECEIVED

OCT 25 2010

DIVISION OF
ENVIRONMENTAL COMPLIANCE

Doug Mendoza

2112059600

From: Susan R Taylor
Sent: Monday, October 18, 2010 8:29 AM
To: Doug Mendoza
Cc: Alverda Opperman
Subject: Mallinckrodt Release Reported

Doug:

Please be advised that at 4 pm on 10/16/2010 Mallinckrodt reported a release of 165 gallons of Acetonitrile.

Reported by Ken Coffrey (314-645-1600).

Metropolitan St. Louis Sewer District

Division of Environmental Compliance
10 East Grand Avenue
St. Louis, MO 63147-2913
Phone: 314.768.6200 www.stlmsd.com

October 11, 2010

Lisa Meyer
MALLINCKRODT
3600 North Second St.
St. Louis, MO 63147

Re: Wastewater User Charge Billing for Special Discharge

Dear Ms. Meyer:

This is to advise you of the wastewater user charges applicable to an on-site special discharge approved in our letter to you dated September 30, 2010. You were advised of the extra-strength surcharges as part of the original approval letter. That charge was determined using the ethylene glycol concentration in your application for special discharge. The discharge date and quantity are from information submitted by you in a letter dated October 8, 2010.

Our Finance Department will bill you by invoice for the charges described below. These charges are based on the rates in MSD Wastewater User Charge Ordinance 13021. For your convenience, using the volume and strength of the waste discharged, the ordinance rates have been converted to a per-gallon basis.

PARTY TO BILL: Addressee

BILLING IS FOR: On-Site Special Discharge

DISCHARGE PERIOD: October 5-6, 2010

SOURCE OF WASTE: Ethylene glycol solution (15%) from building 250 at the Mallinckrodt facility located at 3600 North Second Street, St. Louis, Missouri.

Discharge Period	Billing Item	Quantity	Units	Rate	Charge
10/5-6/10	Extra-Strength Surcharge	1,150	Gal	$0.19	$218.50
Total:	------	**1,150**	Gal	-----	**$218.50**

Please do not pay until you receive our invoice. If you have any questions, please contact me at (314) 436-8755.

Sincerely,
METROPOLITAN ST. LOUIS SEWER DISTRICT

Steven M. Grace

Steve Grace
Environmental Assistant Engineer

bv

pc Chris Verplancke - Finance Dept.
Doug Mendoza
Brian Gibson

File: IU, MALLINCKRODT INC [2112059600], 3600 North Second Street, St. Louis, Missouri

COVIDIEN

OCTOBER 8, 2010

Mr. Steve Grace
Metropolitan St. Louis Sewer District
Department of Environmental Compliance
10 East Grand Avenue
St. Louis, MO 63147-2913

RE: Special Discharge Follow-up - PERMIT NO. 2112059600-3

Dear Mr. Grace:

On September 30, 2010 an approval from MSD was received to discharge 600 gallons of wastewater to MSD for treatment. The wastewater was a 15% ethylene glycol and water solution from Building 250 chiller maintenance. A subsequent phone call was made to you to increase the amount discharged to an estimated 1200 gallons. The following documents the days this wastewater was discharged including discharge volumes and concentration of the ethylene glycol solutions:

- October 5: 500 gallons at 15%
- October 6: 650 gallons at 15%

Actual discharge amount was 1150 gallons. All of the wastewater was discharged through plant sewers to the plant's neutralization system and then to MSD.

If you have any questions or need additional information, please call me at 314.654.3374.

Sincerely,

Lisa Meyer
Senior HSE Engineer

COVIDIEN/MALLINCKRODT
3600 NORTH SECOND STREET
ST. LOUIS, MO 63147

TELEPHONE: 314-654-2000
FAX: 314-654-1251

Metropolitan St. Louis Sewer District

Division of Environmental Compliance
10 East Grand Avenue
St. Louis, MO 63147-2913
Phone: 314.768.6200 www.stlmsd.com

September 30, 2010

Lisa Meyer
MALLINCKRODT
3600 North Second St.
St. Louis, MO 63147

Dear Ms. Meyer:

We have reviewed your application dated September 29, 2010 requesting approval to discharge 600 gallons of wastewater to the Metropolitan St. Louis Sewer District for treatment. This wastewater is 15% ethylene glycol solution at the building 250 Mallinckrodt facility located at 3600 North Second Street, St. Louis, Missouri. We understand that the wastewater will be discharged through sampling point 010.

Based on the information you provided, this wastewater meets MSD Ordinance 12559 standards and is approved for discharge into a sanitary or combined sewer on site. This approval is valid for 30 days from the date of this letter.

You must be certain the waste is discharged into a sanitary or combined sewer inlet only. This letter does not authorize any discharge to a separate storm sewer, or to any watercourse, as any such discharge would be in violation of state and federal laws. **Please notify me at the number below when the discharge is to commence, and please ensure the onsite personnel discharging the wastewater in question are provided with a copy of this letter.**

For billing purposes associated with this high COD wastewater, you must confirm the volume of this wastewater discharged to us, in writing, at the completion of the discharge. This report is due no later than 28 days after this approval expires. Please refer to this letter and include the date of the discharge when providing that figure. Under the provisions of Ordinance 13021, you will be billed by invoice at the billing rate in effect at the time of discharge. The current rate contained in MSD Ordinance 13021 is $298.36 per ton for COD over 600 mg/L. Using the assumed COD concentration based on the percent of ethylene glycol contained in the wastewater in question, and the proposed discharge volume provided in your application, it is estimated that you will be discharging less than one ton of COD over 600 mg/L. (Our quantitative estimate is 0.37 tons COD times $298.36.) Please do not pay this amount until you receive our invoice.

This discharge has been approved based upon the information and sample analysis you provided, and is subject to the conditions stated above. This approval may be revoked by the District at any time if any of the information is found to be incorrect, or if the conditions of this approval are violated. Also, if the discharge causes any operational or maintenance problem within the District's collection or treatment system, or results in violations of any conditions of the District's NPDES permit, Mallinckrodt will be considered responsible for damages.

If you have any questions, please call me at (314) 436-8755.

Sincerely,
METROPOLITAN ST. LOUIS SEWER DISTRICT

Steven M. Grace

Steve Grace
Environmental Assistant Engineer

bv
pc: Brian Gibson
File: IU, MALLINCKRODT INC [2112059600]

C1A

SD EVALUATION CHECKLIST - ON SITE

APPLICATION INFORMATION

Source Name: Mallinckrodt Inc.

Premise Address: 3600 N. 2nd St.

Send approval letter to applicant

Evaluated by: SMG

Date: 9/29/10

Application Dated: 9/29/10 Received: 9/29/10 All Requested Info. Received: 9/29/10

SOURCE FILING/DESCRIPTION

1 - Source in PIMS? (Y) / N

2 - If No, on IU Cross-Ref list? * Y / N

3 - If No, MSD Account # from E-CIS? Y / N

4 - If none, on "Source" list (pre-IMS)? ** Y / N

5 - If No, assigned SOUR# from PIMS.

* o:\costrecovery\cross reference xls file

** o:\costrecovery\sourlist xls file

SOURCE TYPE (circle): (IU) / Dead IU / SD

INDUSTRY ID: 21120596-00

Sample Point: No. Assigned: 8 15 Description: 15% ethylene glycol solution from Bldg. 250 chiller system

Normal WW flow from premise? N/A _____ ccf/month, 2,992,101 GPD, _____ GPH. from SP010

REGULATORY STATUS

Is waste a Hazardous Waste? (N) / Y

Categorical standards apply? (N) / Y

Contain PCB/ asbestos/ radioactive/ dioxin/ used oil? (N) / Y

Regulatory Agency Oversight? (N) / Y

DISCHARGE CONSIDERATIONS At MSD's connection:

Ordinance Limits (12559, p32) exceeded? (N) / Y

Ordinance other limits exceeded (dye, flash pt <140F, temp >140F, obstruction, nuisance foaming/odor, corrosion causing): (N) / Y

Water Quality Standard exceeded? (N) / Y

Fumes in sewer exceed PEL/TLV limits? (N) / Y

Vapors in sewer exceed 10% of LEL? (N) / Y

RECOMMENDATION: (APPROVE) / DENY (cc WWTP Mgr for timed discharge)

APPROVAL CONDITIONS:

Timed Discharge (COD/BOD/WQ/foam): (N) / Y Limit = N/A (less than 1 hour) gal/hour

Require Treatment before Discharge? (N) / Y

Laboratory analysis fee due? (N) / Y $_____

SMR required? (N) / Y Frequency/analysis: _____

SMR log: (N/A) / Remediation.xls / Nonremediation.xls

Volume Billing applies (water unmetered or credited)? (N) / Y

Bill High Strength? N / (Y) Yes, If use >60,000 gal/month water ✓ and, > norm WW strgth

Surcharge calculation attached: N/A / N / (Y)

Expiration log updated: (N/A) / N / Y

O:\CostRecovery\Special Discharge\C1a.Checklist.doc

On-Site Special Discharge High Strength Flow Rate and Surcharge Calculator

1 GENERAL INFORMATION:

Date: 09/29/10
Calculated by: Steve Grace
Source name: Mallinckrodt, Inc.
Waste material: Used ethylene glycol solution from building 250 chiller system
Discharge volume: 600 gallons

2 STRENGTH INFORMATION:

Sample BOD =	0	mg/l =	0	lbs BOD to be discharged
Sample COD =	150,000	mg/l =	751	lbs COD to be discharged
Sample TSS =	0	mg/l =	for surcharge calculation only	

3 PLANT DATA: 2010

Treatment area: Bissell

	Flow (MGD)	BOD (mg/L)	COD (mg/L)	BOD (lb/hr)	COD (lb/hr)	Max Loading = 10% BOD (lb/hr)	COD (lb/hr)
Bissell	**140**	**146**	**292**	**7,113**	**14,227**	**711**	**1,423**
Coldwater	26	188	377	1,704	3,408	170	341
Fenton	5	388	776	679	1,357	68	136
Grand Glaize	16	129	405	708	2,218	71	222
Lemay	131	78	210	3,531	9,584	353	958
Lower Meramec	13	124	409	543	1,785	54	179
Missouri River	27	280	559	2,671	5,341	267	534

4 MINIMUM REQUIRED FLOW RATE:

	BOD (hours	BOD (gpm)	COD (hours)	COD (gpm)
Bissell	**0.00**	**0**	**0.53**	**19**
Coldwater	0.00	0	2.20	5
Fenton	0.00	0	5.53	2
Grand Glaize	0.00	0	3.38	3
Lemay	0.00	0	0.78	13
Lower Meramec	0.00	0	4.21	2
Missouri River	0.00	0	1.41	7

5 SURCHARGE AND VOLUME BILLING

Is volume subject to billing? no (yes/no)
Ratio of BOD/COD = 0.00

(Sample BOD) - 300 = 0 mg/l subject to surcharge
(sample COD) - 600 = 149400 mg/l subject to surcharge
(sample TSS) - 300 = 0 mg/l subject to surcharge

If BOD/COD ratio <= 0.35, the following calculations use the COD value. Otherwise they use the BOD value

Current rates under Ordinance: 13021

Volume =	$ 2.02	/CcF
BOD =	$ 596.72	/ton
COD =	$ 298.36	/ton
TSS =	$ 222.62	/ton

Flow charge = $ - based on volume = 0.8 CcF
BOD surcharge = $ -
COD surcharge = $ 111.56
TSS surcharge = $ -
Total discharge charge = $ 111.56
Customer charge = $ 111.56 DEC charges special discharge customers for total charges > $20.00
Approximate charge/gallon = $ 0.19

Comments

as discharge will take <1 hour, no discharge rate applies. Smg
require volume report for billing purposes. Smg

COVIDIEN

Facsimile Communication

To: Mr. Steve Grace

Company: MSD Environmental Compliance

Fax Number: 314.436.8766

Date: September 29, 2010

Number of Pages *(including cover sheet)*: 9

Health, Safety, Environmental

Lisa Meyer
Senior HSE Engineer

Covidien/Mallinckrodt
3600 N. Second St.
St. Louis, Missouri 63147

Telephone 314-654-3374
Facsimile 314-654-1251

- ☐ For your information
- X Please respond
- ☐ Urgent
- ☐ Confidential

Comments:

Dear Mr. Grace,

Attached please find an application for the Special Discharge of a 15% ethylene glycol and water solution from the Building 250. If you have any questions or need additional information, please contact me.

Thank you,

Lisa Meyer

Metropolitan St. Louis Sewer District

Phone No. (314) 436-8710
Division of Environmental Compliance, 10 East Grand Avenue, St. Louis, Missouri 63147 Fax No. (314) 436-8766

APPLICATION FOR SPECIAL DISCHARGE APPROVAL

I. WASTEWATER SOURCE IDENTIFICATION:

Site Name: Mallinckrodt
Premise Address: 3600 North 2nd St.
City: St. Louis State: MO Zip: 63147
Owner: Mallinckrodt
Contact Person: Lisa Meyer
Title: Senior HSE Engineer
Phone: 314.654.3374 Fax: 314.654.1251

II. APPLICANT (mailing information):

Applicant Name: Lisa Meyer
Title: Senior HSE Engineer
Company Name: Mallinckrodt
Mailing Address: 3600 North 2nd St.
City: St. Louis State: MO Zip: 63147
Phone: 314.654.3374 Fax: 314.654.1251

III. A. MATERIAL TO BE DISCHARGED (check all applicable boxes):

1. Wastewater description/location: Building 250 Ethylene glycol / water
2. Process/activity generating wastewater: Building 250 primary chiller
3. Physical and chemical composition: List all constituents, and known or potentially present regulated contaminants below.
   ☐ See separate listing enclosed, and/or ☐ See analytical results enclosed, and/or ☑ Material Safety Data Sheet enclosed.

DESCRIPTION	RANGE	UNIT
Ethylene Glycol	15	%
Water	85	%

DESCRIPTION *(continued)*	RANGE	UNIT

4. Is this wastewater from a process subject to EPA's categorical standards in 40 CFR Subchapter N? ☐ Yes ☑ No
   a. If yes, the applicable standards are in: 40 CFR Part _____, Subpart _____ ☐ Existing source ☐ New source
5. Does this wastewater contain polychlorinated biphenyls, asbestos or radioactive material? ☐ Yes ☑ No
   a. If yes, describe: _____
6. Representative sample: ☐ Laboratory results attached, and/or ☐ Sample provided (1/2 gallon minimum, clear container)
   a. Sample collection point/location: _____ Collection method: _____
   b. Sampler's name/Co.: _____ Sample date/time: _____
   c. Attach chain of custody as available
7. Discharge will occur over the following time period: ☑ < 30 days ☐ ≥ Two years ☐ Other: _____
   a. Expected total volume of wastewater to be discharged over the time period above: 600 Gallons
   b. Proposed discharge volume: 600 Gallons, at a frequency of: ☑ One time ☐ Daily ☐ Weekly ☐ Monthly ☐ Once/three months ☐ Once/six months ☐ Other: _____
8. Pretreatment of wastewater prior to discharge: ☐ None ☑ Yes, describe: ph adjust at plant outfall SP010
   a. If yes, attach site plan, pretreatment system schematic, and design specifications.
9. Wastewater from a remediation project under: ☐ Superfund/CERCLA ☐ RCRA ☐ Voluntary program ☐ UST ☑ Not applicable
   a. If from a remediation project, briefly describe the past and present utilization of the property: _____

III.B. MATERIAL FROM UNDERGROUND STORAGE TANK SOURCE

☑ **Not applicable (go to Section IV)**

Please answer the following questions if you are requesting to discharge wastewater associated with an underground storage tank system.

1. a. Wastewater from: ☐ Inside UST(s) ☐ UST system pit ☐ Excavation outside UST system pit ☐ Monitoring well ☐ Groundwater remediation system

   b. UST project involves wastewater from: ☐ UST(s) closed in place ☐ UST(s) removed ☐ Remediation ☐ Upgrade ☐ Maintenance activities ☐ Well monitoring ☐ Other, explain: _____

   c. If wastewater is from a closure project, how long has UST(s) been out of service: _____ years

2. a. State assigned UST site identification number: _____ ☐ Not applicable

   b. Number of USTs affected: _____ ☐ Unknown

   c. For the UST(s) involved, their state identification number(s): _____ ☐ Not applicable

   d. Service Station Identification Number, as applicable: _____

3. Tank contents/former contents: ☐ Gasoline ☐ #2 diesel ☐ Used oil ☐ Unknown ☐ Other: _____

IV. DISCHARGE LOCATION

1. ☑ On-site. Describe proposed point of entry to sewer and the discharge rate (must be a sanitary or combined sewer): _____

B250 plant sewer to main outfall SP010 Note: Range of discharge must not surcharge sewer line.

2. ☐ Haul to MSD Bissell Point Hauled Waste Receiving Station at 10 E. Grand, St. Louis, MO.

   a. Transporters Name: _____ and MSD Hauler ID Number: _____

   b. Hazardous Waste Certification:

   For wastewater which is hauled to MSD's Bissell Point Hauled Waste Receiving Station, I hereby certify that to the best of my knowledge and belief, the above hauled waste is not classified as a RCRA "hazardous waste" as defined by the MDNR in 10 CSR 25 or USEPA in 40 CFR Part 261.

   Applicant Name (print): _____

   Signature: _____ **Date:** _____

ADDITIONAL INFORMATION:

_____

V. APPLICANT SIGNATURE AND CERTIFICATION

This application must be signed by the applicant: either the source contact, or a contractor or agent directly responsible for site activities.

I hereby certify that I am directly responsible for activities at the site regarding the wastewater to be discharged, and to the best of my knowledge and belief, based on appropriate inquiry, the information in this application is true, complete, and accurate. The samples or analyses submitted are representative of the materials to be discharged. If granted approval to discharge, I agree to abide by the MSD Ordinances, and all applicable federal, state and local regulations. I agree to pay the costs of any pre-approval analyses performed by MSD and to pay any applicable disposal charges for the volume and strength of the wastes discharged.

Applicant Name (print): Lisa A. Meyer

Signature: Lisa A. Meyer **Date:** 9/29/10

FOR MSD USE ONLY:

File Name: Mallinckrodt Inc. ID No. 21120596-00 Sample Point No. 815

Metropolitan St. Louis Sewer District
Division of Environmental Compliance
10 East Grand Avenue
St. Louis, MO 63147-2913
Phone: 314.768.6200 www.stlmsd.com

September 8, 2010

Lisa Meyer
MALLINCKRODT
3600 North Second St.
St. Louis, MO 63147

Re: Wastewater User Charge Billing for Special Discharge

Dear Ms. Meyer:

This is to advise you of the wastewater user charges applicable to an on-site special discharge approved in our letter to you dated August 18, 2010. You were advised of the extra-strength surcharges as part of the original approval letter. That charge was determined using the chemical oxygen demand concentration in the laboratory analytical report submitted in conjunction with your application for special discharge. The discharge date and quantity are from information submitted by you in a letter dated September 7, 2010.

Our Finance Department will bill you by invoice for the charges described below. These charges are based on the rates in MSD Wastewater User Charge Ordinance 13021. For your convenience, using the volume and strength of the waste discharged, the ordinance rates have been converted to a per-gallon basis.

PARTY TO BILL: Addressee

BILLING IS FOR: On-Site Special Discharge

DISCHARGE PERIOD: September 5-6, 2010

SOURCE OF WASTE: Two unusable batches of Ioversol/water solution from Building 504 of the Mallinckrodt facility located at 3600 North Second Street, St. Louis, Missouri.

Discharge Period	Billing Item	Quantity	Units	Rate	Charge
9/5-6/10	Extra-Strength Surcharge	3,000	Gal	$0.28	$840.00
Totals:	------	3,000	Gal	-----	$840.00

Please do not pay until you receive our invoice. If you have any questions, please contact me at (314) 436-8755.

Sincerely,
METROPOLITAN ST. LOUIS SEWER DISTRICT
Steven M. Grace
Steve Grace
Environmental Assistant Engineer

bv

pc Chris Verplancke - Finance Dept.
Doug Mendoza
File: IU, MALLINCKRODT INC [2112059600], 3600 North Second Street, St. Louis, Missouri

PRIORITIES PERFORMANCE SERVICE

COVIDIEN

SEPTEMBER 7, 2010

Mr. Steve Grace
Metropolitan St. Louis Sewer District
Department of Environmental Compliance
10 East Grand Avenue
St. Louis, MO 63147-2913

RE: Special Discharge Follow-up - PERMIT NO. 2112059600-3

Dear Mr. Grace:

Per a letter from your office dated August 18, 2010 an approval from MSD was received to discharge 3000 gallons of wastewater to MSD for treatment. The wastewater consisted of two unusable batches of an Ioversol/water solution from Building 504. Per email sent to you on Friday, September 3, the discharge was scheduled to commence on Saturday, September 4, 2010. The following documents the days this wastewater was actually discharged including discharge volumes:

- September 5, 2010: 1500 gallons from 6:00 am – 6:00 pm
- September 6, 2010: 1500 gallons from 6:00 am – 5:00 pm

All of the wastewater was discharged through plant sewers to the plant's neutralization system and then to MSD.

If you have any questions or need additional information, please call me at 314.654.3374.

Sincerely,

Lisa Meyer

Lisa Meyer
Senior HSE Engineer

COVIDIEN/MALLINCKRODT
3600 NORTH SECOND STREET
ST. LOUIS, MO 63147

TELEPHONE: 314-654-2000
FAX: 314-654-1251

Metropolitan St. Louis Sewer District

Division of Environmental Compliance
10 East Grand Avenue
St. Louis, MO 63147-2913
Phone: 314.768.6200 www.stlmsd.com

August 18, 2010

Lisa Meyer
MALLINCKRODT
3600 North Second St.
St. Louis, MO 63147

Dear Ms. Meyer:

We have reviewed your application dated August 16, 2010 requesting approval to discharge 3,000 gallons of wastewater to the Metropolitan St. Louis Sewer District for treatment. This wastewater consists of two unusable batches of Ioversol/water solution from Building 504 of the Mallinckrodt facility located at 3600 North Second Street, St. Louis, Missouri. Information provided on the application indicates the Ioversol is a contrast imaging media, and that the unusable batches will be discharged through sampling point 010.

Based on the information you provided, this wastewater meets MSD Ordinance 12559 standards and is approved for discharge into a sanitary or combined sewer on site. Due to the elevated concentration of chemical oxygen demand (COD) in the wastewater in question, the discharge is limited to 780 gallons per hour. This approval is valid for 30 days from the date of this letter.

You must be certain the waste is discharged into a sanitary or combined sewer inlet only. This letter does not authorize any discharge to a separate storm sewer, or to any watercourse, as any such discharge would be in violation of state and federal laws. **Please notify me at the number below when the discharge is to commence, and please ensure the onsite personnel discharging the wastewater in question are provided with a copy of this letter.**

For billing purposes associated with this high COD wastewater, you must confirm the volume of this wastewater discharged to us, in writing, at the completion of the discharge. This report is due no later than 28 days after this approval expires. Please refer to this letter and include the date of the discharge when providing that figure. Under the provisions of Ordinance 13021, you will be billed by invoice at the billing rate in effect at the time of discharge. The current rate contained in MSD Ordinance 13021, is $298.36 per ton for COD over 600 mg/L. Using the assumed COD concentration contained in the laboratory analytical report provided, it is estimated that you will be discharging approximately 2.7 tons of COD over 600 mg/L. (Our quantitative estimate is 2.74 tons COD times $298.36.) Please do not pay this amount until you receive our invoice.

This discharge has been approved based upon the information and sample analysis you provided, and is subject to the conditions stated above. This approval may be revoked by the District at any time if any of the information is found to be incorrect, or if the conditions of this approval are violated. Also, if the discharge causes any operational or maintenance problem within the District's collection or treatment system, or results in violations of any conditions of the District's NPDES permit, Mallinckrodt will be considered responsible for damages.

If you have any questions, please call me at (314) 436-8755.

Sincerely,
METROPOLITAN ST. LOUIS SEWER DISTRICT

Steven M. Grace

Steve Grace
Environmental Assistant Engineer
bv
pc: Doug Mendoza
File: IU, MALLINCKRODT INC [2112059600]

C1A

SD EVALUATION CHECKLIST - ON SITE

APPLICATION INFORMATION

Source Name: Mallinckrodt, Inc. Evaluated by: SMG MCG 8/19/2010

Premise Address: 3600 N. 2nd St. Date: 8/18/10

Send approval letter to applicant

Application Dated: 8/16/10 Received: 8/17/10 All Requested Info. Received: 8/17/10

SOURCE FILING/DESCRIPTION

1 - Source in PIMS? (Y) / N

2 - If No, on IU Cross-Ref list? * Y / N

3 - If No, MSD Account # from E-CIS? Y / N

4 - If none, on "Source" list (pre-IMS)? ** Y / N

5 - If No, assigned SOUR# from PIMS.

SOURCE TYPE (circle): (IU) / Dead IU / SD

INDUSTRY ID: 21120596-00

* o:\costrecovery\cross reference xls file

** o:\costrecovery\sourlist xls file

Sample Point: No. Assigned: 845 Description: Iversol / water contrast imaging media solution

Normal WW flow from premise? N/A _____ ccf/month, 2,992,101 GPD, _____ GPH. from SP010

REGULATORY STATUS

Is waste a Hazardous Waste? (N) / Y

Categorical standards apply? (N) / Y

Contain PCB/ asbestos/ radioactive/ dioxin/ used oil? (N) / Y

Regulatory Agency Oversight? (N) / Y

DISCHARGE CONSIDERATIONS At MSD's connection:

Ordinance Limits (12559, p32) exceeded? N / (Y) toluene (TTO) exceeded; however, discharge rate of 13 gpm should ensure toluene concs. won't pose concern

Ordinance other limits exceeded (dye, flash pt <140F, temp >140F, obstruction, nuisance foaming/odor, corrosion causing): (N) / Y

Water Quality Standard exceeded? (N) / Y

Fumes in sewer exceed PEL/TLV limits? N / (Y)

Vapors in sewer exceed 10% of LEL? (N) / Y

RECOMMENDATION: (APPROVE) / DENY (cc WWTP Mgr for timed discharge)

APPROVAL CONDITIONS:

Timed Discharge (COD/BOD/WQ/foam): N / (Y) Limit = 180 gal/hour

Require Treatment before Discharge? (N) / Y

Laboratory analysis fee due? (N) / Y $_____

SMR required? (N) / Y Frequency/analysis: _____

SMR log: (N/A) / Remediation.xls / Nonremediation.xls

Volume Billing applies (water unmetered or credited)? (N) / Y

Bill High Strength? N / (Y) Yes, If use >60,000 gal/month water ___and, > norm WW strgth

Surcharge calculation attached: N/A / N / (Y)

Expiration log updated: (N/A) / N / Y O:\CostRecovery\Special Discharge\C1a.Checklist.doc

On-Site Special Discharge High Strength Flow Rate and Surcharge Calculator

1 GENERAL INFORMATION:

Date: 08/18/10
Calculated by: Steve Grace
Source name: MALLINCKRODT INC
Waste material: Ioversol/water contrast imaging media solution from Bldg. 504
Discharge volume: 3,000 gallons

2 STRENGTH INFORMATION:

Sample BOD =	0	mg/l =	0	lbs BOD to be discharged
Sample COD =	219,500	mg/l =	5492	lbs COD to be discharged
Sample TSS =	13,800	mg/l =	for surcharge calculation only	

3 PLANT DATA: 2010

Treatment area: Bissell

	Flow (MGD)	BOD (mg/L)	COD (mg/L)	BOD (lb/hr)	COD (lb/hr)	Max Loading = 10% BOD (lb/hr)	COD (lb/hr)
Bissell	**140**	**146**	**292**	**7,113**	**14,227**	**711**	**1,423**
Coldwater	26	188	377	1,704	3,408	170	341
Fenton	5	388	776	679	1,357	68	136
Grand Glaize	16	129	405	708	2,218	71	222
Lemay	131	78	210	3,531	9,584	353	958
Lower Meramec	13	124	409	543	1,785	54	179
Missouri River	27	280	559	2,671	5,341	267	534

4 MINIMUM REQUIRED FLOW RATE:

	BOD (hours	BOD (gpm)	COD (hours)	COD (gpm)
Bissell	**0.00**	**0**	**3.86**	**13**
Coldwater	0.00	0	16.12	3
Fenton	0.00	0	40.46	1
Grand Glaize	0.00	0	24.77	2
Lemay	0.00	0	5.73	9
Lower Meramec	0.00	0	30.77	2
Missouri River	0.00	0	10.28	5

5 SURCHARGE AND VOLUME BILLING

Is volume subject to billing? no (yes/no)
Ratio of BOD/COD = 0.00

(Sample BOD) - 300 = 0 mg/l subject to surcharge
(sample COD) - 600 = 218900 mg/l subject to surcharge
(sample TSS) - 300 = 13500 mg/l subject to surcharge

If BOD/COD ratio <= 0.35, the following calculations use the COD value. Otherwise they use the BOD value

Current rates under Ordinance: 13021

Volume = $ 2.02 /CcF
BOD = $ 596.72 /ton
COD = $ 298.36 /ton
TSS = $ 222.62 /ton

Flow charge = $ - based on volume = 4.01 CcF
BOD surcharge = $ -
COD surcharge = $ 817.26
TSS surcharge = $ 37.61
Total discharge charge = $ 854.87
Customer charge = $ 854.87 DEC charges special discharge customers for total charges > $20.00
Approximate charge/gallon = $ 0.28

Comments

require volume report for billing purposes. Smg

On-Site Special Discharge Flow Rate Calculator

This calculator does not consider attributable concentrations from normal flow

1 GENERAL INFORMATION:

Date: 08/19/10
Calculated by: Roland Biehl
Source name: MALLINCKRODT INC [2112059600]
Waste material: SP845
Discharge volume: 3,000 gallons

2 PLANT DATA (as needed): FY07

Treatment area: Bissell

	Flow (MGD)
Bissell	119
Coldwater	23
Fenton	5
Grand Glaize	16
Lemay	122
Lower Meramec	10
Missouri River	28

3 MINIMUM REQUIRED FLOW RATE:

SD Concentration = 14.90 mg/L
SD Limit = 1.36 mg/L — Define the SD limit here = Ord Prohibition - Fume Toxicity
Normal Flow Rate = 124,671 GPH — Use normal flow, RF, upstream flow and plant flow, as applicable
Safety Factor = 10% default is 10%, apply more as neccessary
SD Flow Rate = 11270 GPH
SD Flow Rate = 188 GPM
Total discharge time = 0.27 Hours

Comments:

To be discharged at onsite sampling point SP010 (flow rate from this sampling point used above)
No flow rate condition required because discharge ≤ 1.0 hour. Smg

COVIDIEN

Memo

To: Mr. Steve Grace

Company: MSD Environmental Compliance

Fax Number: 314.436.8766

Date: August 16, 2010

Number of Pages *(including cover sheet):* 29

Health, Safety, Environmental

Lisa Meyer
Senior HSE Engineer

Covidien/Mallinckrodt
3600 N. Second St.
St. Louis, Missouri 63147

Telephone 314-654-3374
Facsimile 314-654-1251

- ☐ For your information
- X Please respond
- ☐ Urgent
- ☐ Confidential

Comments:

Dear Mr. Grace,

Attached please find an application for the Special Discharge of a bad batch of MP602 imaging contrast media from Building 507. If you have any questions or need additional information, please contact me.

Thank you,

Lisa Meyer

Lisa Meyer

Metropolitan St. Louis Sewer District

Phone No. (314) 436-8710

Division of Environmental Compliance, 10 East Grand Avenue, St. Louis, Missouri 63147 Fax No. (314) 436-8766

APPLICATION FOR SPECIAL DISCHARGE APPROVAL

I. WASTEWATER SOURCE IDENTIFICATION:

Site Name: Mallinckrodt

Premise Address: 3600 North 2nd St.

City: St. Louis State: MO Zip: 63147

Owner: Mallinckrodt

Contact Person: Lisa Meyer

Title: Senior HSE Engineer

Phone: 314.654.3374 Fax: 314.654.1251

II. APPLICANT (mailing information):

Applicant Name: Lisa Meyer

Title: Senior HSE Engineer

Company Name: Mallinckrodt

Mailing Address: 3600 North 2nd St.

City: St. Louis State: MO Zip: 63147

Phone: 314.654.3374 Fax: 314.654.1251

III. A. MATERIAL TO BE DISCHARGED (check all applicable boxes):

1. Wastewater description/location: Bad batch Imaging contrast media MP602 from Building 504
2. Process/activity generating wastewater: 2 bad batches of MP602 (Ioversol) contrast media from Building 504. Approx. 3000 gallons were put into ten (10) plastic totes (300 gallons each) Analytical attached for each tote.
3. Physical and chemical composition: List all constituents, and known or potentially present regulated contaminants below.

☐ See separate listing enclosed, and/or ☑ See analytical results enclosed, and/or ☑ Material Safety Data Sheet enclosed.

DESCRIPTION	RANGE	UNIT
MP602 Ioversol	30	%
Water	70	%

DESCRIPTION *(continued)*	RANGE	UNIT

4. Is this wastewater from a process subject to EPA's categorical standards in 40 CFR Subchapter N? ☐ Yes ☑ No
   a. If yes, the applicable standards are in: 40 CFR Part _____, Subpart _____ ☐ Existing source ☐ New source
5. Does this wastewater contain polychlorinated biphenyls, asbestos or radioactive material? ☐ Yes ☑ No
   a. If yes, describe: _____
6. Representative sample: ☐ Laboratory results attached, and/or ☐ Sample provided (1/2 gallon minimum, clear container)
   a. Sample collection point/location: _____ Collection method: _____
   b. Sampler's name/Co.: _____ Sample date/time: _____
   c. Attach chain of custody as available
7. Discharge will occur over the following time period: ☑ < 30 days ☐ ≥ Two years ☐ Other: _____
   a. Expected total volume of wastewater to be discharged over the time period above: _____ Gallons
   b. Proposed discharge volume: 3000 Gallons, at a frequency of: ☑ One time ☐ Daily ☐ Weekly ☐ Monthly ☐ Once/three months ☐ Once/six months ☐ Other: _____
8. Pretreatment of wastewater prior to discharge: ☐ None ☑ Yes, describe: pH neutralization at main outfall SP010.
   a. If yes, attach site plan, pretreatment system schematic, and design specifications.
9. Wastewater from a remediation project under: ☐ Superfund/CERCLA ☐ RCRA ☐ Voluntary program ☐ UST ☑ Not applicable
   a. If from a remediation project, briefly describe the past and present utilization of the property: _____

III.B. MATERIAL FROM UNDERGROUND STORAGE TANK SOURCE

☑ **Not applicable (go to Section IV)**

Please answer the following questions if you are requesting to discharge wastewater associated with an underground storage tank system.

1. a. Wastewater from: ☐ Inside UST(s) ☐ UST system pit ☐ Excavation outside UST system pit ☐ Monitoring well ☐ Groundwater remediation system

   b. UST project involves wastewater from: ☐ UST(s) closed in place ☐ UST(s) removed ☐ Remediation ☐ Upgrade ☐ Maintenance activities ☐ Well monitoring ☐ Other, explain: _____

   c. If wastewater is from a closure project, how long has UST(s) been out of service: _____ years

2. a. State assigned UST site identification number: _____ ☐ Not applicable

   b. Number of USTs affected: _____ ☐ Unknown

   c. For the UST(s) involved, their state identification number(s): _____ ☐ Not applicable

   d. Service Station Identification Number, as applicable: _____

3. Tank contents/former contents: ☐ Gasoline ☐ #2 diesel ☐ Used oil ☐ Unknown ☐ Other: _____

IV. DISCHARGE LOCATION

1. ☑ On-site. Describe proposed point of entry to sewer and the discharge rate (must be a sanitary or combined sewer): _____

   plant sewer to SP010 _____ Note: Range of discharge must not surcharge sewer line.

2. ☐ Haul to MSD Bissell Point Hauled Waste Receiving Station at 10 E. Grand, St. Louis, MO.

   a. Transporters Name: _____ and MSD Hauler ID Number: _____

   b. Hazardous Waste Certification:

   For wastewater which is hauled to MSD's Bissell Point Hauled Waste Receiving Station, I hereby certify that to the best of my knowledge and belief, the above hauled waste is not classified as a RCRA "hazardous waste" as defined by the MDNR in 10 CSR 25 or USEPA in 40 CFR Part 261.

   Applicant Name (print): _____

   Signature: _____ **Date:** _____

ADDITIONAL INFORMATION:

_____

V. APPLICANT SIGNATURE AND CERTIFICATION

This application must be signed by the applicant: either the source contact, or a contractor or agent directly responsible for site activities.

I hereby certify that I am directly responsible for activities at the site regarding the wastewater to be discharged, and to the best of my knowledge and belief, based on appropriate inquiry, the information in this application is true, complete, and accurate. The samples or analyses submitted are representative of the materials to be discharged. If granted approval to discharge, I agree to abide by the MSD Ordinances, and all applicable federal, state and local regulations. I agree to pay the costs of any pre-approval analyses performed by MSD and to pay any applicable disposal charges for the volume and strength of the wastes discharged.

Applicant Name (print): Lisa Meyer

Signature: L Meyer **Date:** 08/16/10

TEKLAB, INC.

5445 HORSESHOE LAKE ROAD
COLLINSVILLE, ILLINOIS 62234

ENVIRONMENTAL TESTING LABORATORY

TEL: 618-344-1004
FAX: 618-344-1005

LABORATORY RESULTS

Client: Mallinckrodt Inc.
WorkOrder: 10070122
Lab ID: 10070122-001
Report Date: 09-Jul-10

Client Project: MP602 Totes
Client Sample ID: MP602 #01
Collection Date: 7/2/2010 8:15:00 AM
Matrix: AQUEOUS

Analyses	Certification	RL	Qual	Result	Units	DF	Date Analyzed	Analyst
EPA 600 4.1.4, 200.7R4.4, METALS BY ICP (TOTAL)								
Cadmium	NELAP	0.0200		< 0.0200	mg/L	10	7/8/2010 6:13:08 AM	LAL
Chromium	NELAP	0.100		< 0.100	mg/L	10	7/6/2010 11:38:20 PM	LAL
Copper	NELAP	0.100		< 0.100	mg/L	10	7/6/2010 11:38:20 PM	LAL
Iron	NELAP	0.200		0.652	mg/L	10	7/6/2010 11:38:20 PM	LAL
Lead	NELAP	0.400		< 0.400	mg/L	10	7/8/2010 6:13:08 AM	LAL
Nickel	NELAP	0.100		0.109	mg/L	10	7/6/2010 11:38:20 PM	LAL
Zinc	NELAP	0.100	J	0.034	mg/L	10	7/6/2010 11:38:20 PM	LAL
EPA 600 410.4								
Chemical Oxygen Demand	NELAP	20000		231000	mg/L	400	7/7/2010 10:00:00 AM	BSJ
EPA 600 624, VOLATILE ORGANIC COMPOUNDS BY GC/MS								
1,1,1-Trichloroethane	NELAP	500		ND	µg/L	100	7/6/2010 6:16:00 PM	CCF
1,1,2,2-Tetrachloroethane	NELAP	500		ND	µg/L	100	7/6/2010 6:16:00 PM	CCF
1,1,2-Trichloroethane	NELAP	500		ND	µg/L	100	7/6/2010 6:16:00 PM	CCF
1,1-Dichloroethane	NELAP	500		ND	µg/L	100	7/6/2010 6:16:00 PM	CCF
1,1-Dichloroethene	NELAP	500		ND	µg/L	100	7/6/2010 6:16:00 PM	CCF
1,2-Dichlorobenzene	NELAP	500		ND	µg/L	100	7/6/2010 6:16:00 PM	CCF
1,2-Dichloroethane	NELAP	500		ND	µg/L	100	7/6/2010 6:16:00 PM	CCF
1,2-Dichloropropane	NELAP	500		ND	µg/L	100	7/6/2010 6:16:00 PM	CCF
1,3-Dichlorobenzene	NELAP	500		ND	µg/L	100	7/6/2010 6:16:00 PM	CCF
1,4-Dichlorobenzene	NELAP	500		ND	µg/L	100	7/6/2010 6:16:00 PM	CCF
2-Chloroethyl vinyl ether	NELAP	2000		ND	µg/L	100	7/6/2010 6:16:00 PM	CCF
Acrolein	NELAP	10000		ND	µg/L	100	7/6/2010 6:16:00 PM	CCF
Acrylonitrile	NELAP	500		ND	µg/L	100	7/6/2010 6:16:00 PM	CCF
Benzene	NELAP	200		ND	µg/L	100	7/6/2010 6:16:00 PM	CCF
Bromodichloromethane	NELAP	500		ND	µg/L	100	7/6/2010 6:16:00 PM	CCF
Bromoform	NELAP	500		ND	µg/L	100	7/6/2010 6:16:00 PM	CCF
Bromomethane	NELAP	1000		ND	µg/L	100	7/6/2010 6:16:00 PM	CCF
Carbon tetrachloride	NELAP	500		ND	µg/L	100	7/6/2010 6:16:00 PM	CCF
Chlorobenzene	NELAP	500		ND	µg/L	100	7/6/2010 6:16:00 PM	CCF
Chloroethane	NELAP	1000		ND	µg/L	100	7/6/2010 6:16:00 PM	CCF
Chloroform	NELAP	500		ND	µg/L	100	7/6/2010 6:16:00 PM	CCF
Chloromethane	NELAP	1000		ND	µg/L	100	7/6/2010 6:16:00 PM	CCF
cis-1,3-Dichloropropene	NELAP	500		ND	µg/L	100	7/6/2010 6:16:00 PM	CCF
Dibromochloromethane	NELAP	500		ND	µg/L	100	7/6/2010 6:16:00 PM	CCF
Ethylbenzene	NELAP	500		ND	µg/L	100	7/6/2010 6:16:00 PM	CCF
Methylene chloride	NELAP	500		ND	µg/L	100	7/6/2010 6:16:00 PM	CCF
Tetrachloroethene	NELAP	500		ND	µg/L	100	7/6/2010 6:16:00 PM	CCF
Toluene	NELAP	200		403	µg/L	100	7/6/2010 6:16:00 PM	CCF

TEKLAB, INC.

5445 HORSESHOE LAKE ROAD
COLLINSVILLE, ILLINOIS 62234

ENVIRONMENTAL TESTING LABORATORY

TEL: 618-344-1004
FAX: 618-344-1005

LABORATORY RESULTS

Client: Mallinckrodt Inc.
WorkOrder: 10070122
Lab ID: 10070122-001
Report Date: 09-Jul-10

Client Project: MP602 Totes
Client Sample ID: MP602 #01
Collection Date: 7/2/2010 8:15:00 AM
Matrix: AQUEOUS

Analyses	Certification	RL	Qual	Result	Units	DF	Date Analyzed	Analyst
EPA 600 624, VOLATILE ORGANIC COMPOUNDS BY GC/MS								
trans-1,2-Dichloroethene	NELAP	500		ND	µg/L	100	7/6/2010 6:16:00 PM	CCF
trans-1,3-Dichloropropene	NELAP	500		ND	µg/L	100	7/6/2010 6:16:00 PM	CCF
Trichloroethene	NELAP	500		ND	µg/L	100	7/6/2010 6:16:00 PM	CCF
Vinyl chloride	NELAP	200		ND	µg/L	100	7/6/2010 6:16:00 PM	CCF
Xylenes, Total	NELAP	500		ND	µg/L	100	7/6/2010 6:16:00 PM	CCF
Surr: 1,2-Dichloroethane-d4		74.7-129		118.8	%REC	100	7/6/2010 6:16:00 PM	CCF
Surr: 4-Bromofluorobenzene		86-119		108.3	%REC	100	7/6/2010 6:16:00 PM	CCF
Surr: Dibromofluoromethane		81.7-123		108.1	%REC	100	7/6/2010 6:16:00 PM	CCF
Surr: Toluene-d8		84.3-114		98.9	%REC	100	7/6/2010 6:16:00 PM	CCF
STANDARD METHODS 18TH ED. 2540 D								
Total Suspended Solids	NELAP	6		22400	mg/L	1	7/7/2010 9:00:00 AM	BSJ

Sample Narrative

EPA 600 4.1.4, 200.7R4.4, Metals by ICP (Total)

Elevated reporting limit due to high levels of target and/or non-target analytes.

EPA 600 624, Volatile Organic Compounds by GC/MS

Elevated reporting limit due to sample composition.

pH 5.0

TEKLAB, INC.

5445 HORSESHOE LAKE ROAD
COLLINSVILLE, ILLINOIS 62234

ENVIRONMENTAL TESTING LABORATORY

TEL: 618-344-1004
FAX: 618-344-1005

LABORATORY RESULTS

Client: Mallinckrodt Inc.
WorkOrder: 10070122
Lab ID: 10070122-002
Report Date: 09-Jul-10

Client Project: MP602 Totes
Client Sample ID: MP602 #02
Collection Date: 7/2/2010 8:25:00 AM
Matrix: AQUEOUS

Analyses	Certification	RL	Qual	Result	Units	DF	Date Analyzed	Analyst
EPA 600 4.1.4, 200.7R4.4, METALS BY ICP (TOTAL)								
Cadmium	NELAP	0.0200		< 0.0200	mg/L	10	7/8/2010 6:19:50 AM	LAL
Chromium	NELAP	0.100	J	0.075	mg/L	10	7/6/2010 11:45:03 PM	LAL
Copper	NELAP	0.100		< 0.100	mg/L	10	7/6/2010 11:45:03 PM	LAL
Iron	NELAP	0.200		1.41	mg/L	10	7/6/2010 11:45:03 PM	LAL
Lead	NELAP	0.400		< 0.400	mg/L	10	7/8/2010 6:19:50 AM	LAL
Nickel	NELAP	0.100	J	0.094	mg/L	10	7/6/2010 11:45:03 PM	LAL
Zinc	NELAP	0.100	J	0.021	mg/L	10	7/6/2010 11:45:03 PM	LAL
EPA 600 410.4								
Chemical Oxygen Demand	NELAP	20000		251000	mg/L	400	7/7/2010 10:00:00 AM	BSJ
EPA 600 624, VOLATILE ORGANIC COMPOUNDS BY GC/MS								
1,1,1-Trichloroethane	NELAP	500		ND	µg/L	100	7/6/2010 6:48:00 PM	CCF
1,1,2,2-Tetrachloroethane	NELAP	500		ND	µg/L	100	7/6/2010 6:48:00 PM	CCF
1,1,2-Trichloroethane	NELAP	500		ND	µg/L	100	7/6/2010 6:48:00 PM	CCF
1,1-Dichloroethane	NELAP	500		ND	µg/L	100	7/6/2010 6:48:00 PM	CCF
1,1-Dichloroethene	NELAP	500		ND	µg/L	100	7/6/2010 6:48:00 PM	CCF
1,2-Dichlorobenzene	NELAP	500		ND	µg/L	100	7/6/2010 6:48:00 PM	CCF
1,2-Dichloroethane	NELAP	500		ND	µg/L	100	7/6/2010 6:48:00 PM	CCF
1,2-Dichloropropane	NELAP	500		ND	µg/L	100	7/6/2010 6:48:00 PM	CCF
1,3-Dichlorobenzene	NELAP	500		ND	µg/L	100	7/6/2010 6:48:00 PM	CCF
1,4-Dichlorobenzene	NELAP	500		ND	µg/L	100	7/6/2010 6:48:00 PM	CCF
2-Chloroethyl vinyl ether	NELAP	2000		ND	µg/L	100	7/6/2010 6:48:00 PM	CCF
Acrolein	NELAP	10000		ND	µg/L	100	7/6/2010 6:48:00 PM	CCF
Acrylonitrile	NELAP	500		ND	µg/L	100	7/6/2010 6:48:00 PM	CCF
Benzene	NELAP	200		ND	µg/L	100	7/6/2010 6:48:00 PM	CCF
Bromodichloromethane	NELAP	500		ND	µg/L	100	7/6/2010 6:48:00 PM	CCF
Bromoform	NELAP	500		ND	µg/L	100	7/6/2010 6:48:00 PM	CCF
Bromomethane	NELAP	1000		ND	µg/L	100	7/6/2010 6:48:00 PM	CCF
Carbon tetrachloride	NELAP	500		ND	µg/L	100	7/6/2010 6:48:00 PM	CCF
Chlorobenzene	NELAP	500		ND	µg/L	100	7/6/2010 6:48:00 PM	CCF
Chloroethane	NELAP	1000		ND	µg/L	100	7/6/2010 6:48:00 PM	CCF
Chloroform	NELAP	500		ND	µg/L	100	7/6/2010 6:48:00 PM	CCF
Chloromethane	NELAP	1000		ND	µg/L	100	7/6/2010 6:48:00 PM	CCF
cis-1,3-Dichloropropene	NELAP	500		ND	µg/L	100	7/6/2010 6:48:00 PM	CCF
Dibromochloromethane	NELAP	500		ND	µg/L	100	7/6/2010 6:48:00 PM	CCF
Ethylbenzene	NELAP	500		ND	µg/L	100	7/6/2010 6:48:00 PM	CCF
Methylene chloride	NELAP	500		ND	µg/L	100	7/6/2010 6:48:00 PM	CCF
Tetrachloroethene	NELAP	500		ND	µg/L	100	7/6/2010 6:48:00 PM	CCF
Toluene	NELAP	200	J	180	µg/L	100	7/6/2010 6:48:00 PM	CCF

TEKLAB, INC.

5445 HORSESHOE LAKE ROAD
COLLINSVILLE, ILLINOIS 62234

ENVIRONMENTAL TESTING LABORATORY

TEL: 618-344-1004
FAX: 618-344-1005

LABORATORY RESULTS

Client: Mallinckrodt Inc.
WorkOrder: 10070122
Lab ID: 10070122-002
Report Date: 09-Jul-10

Client Project: MP602 Totes
Client Sample ID: MP602 #02
Collection Date: 7/2/2010 8:25:00 AM
Matrix: AQUEOUS

Analyses	Certification	RL	Qual	Result	Units	DF	Date Analyzed	Analyst
EPA 600 624, VOLATILE ORGANIC COMPOUNDS BY GC/MS								
trans-1,2-Dichloroethene	NELAP	500		**ND**	µg/L	100	7/6/2010 6:48:00 PM	CCF
trans-1,3-Dichloropropene	NELAP	500		**ND**	µg/L	100	7/6/2010 6:48:00 PM	CCF
Trichloroethene	NELAP	500		**ND**	µg/L	100	7/6/2010 6:48:00 PM	CCF
Vinyl chloride	NELAP	200		**ND**	µg/L	100	7/6/2010 6:48:00 PM	CCF
Xylenes, Total	NELAP	500		**ND**	µg/L	100	7/6/2010 6:48:00 PM	CCF
Surr: 1,2-Dichloroethane-d4		74.7-129		**121.6**	%REC	100	7/6/2010 6:48:00 PM	CCF
Surr: 4-Bromofluorobenzene		86-119		**107.4**	%REC	100	7/6/2010 6:48:00 PM	CCF
Surr: Dibromofluoromethane		81.7-123		**108.7**	%REC	100	7/6/2010 6:48:00 PM	CCF
Surr: Toluene-d8		84.3-114		**98.8**	%REC	100	7/6/2010 6:48:00 PM	CCF
STANDARD METHODS 18TH ED. 2540 D								
Total Suspended Solids	NELAP	6		**16100**	mg/L	1	7/7/2010 9:00:00 AM	BSJ

Sample Narrative

EPA 600 4.1.4, 200.7R4.4, Metals by ICP (Total)

Elevated reporting limit due to high levels of target and/or non-target analytes.

EPA 600 624, Volatile Organic Compounds by GC/MS

Elevated reporting limit due to sample composition.

pH 6.5

TEKLAB, INC.

5445 HORSESHOE LAKE ROAD
COLLINSVILLE, ILLINOIS 62234

ENVIRONMENTAL TESTING LABORATORY

TEL: 618-344-1004
FAX: 618-344-1005

LABORATORY RESULTS

Client: Mallinckrodt Inc.
WorkOrder: 10070122
Lab ID: 10070122-003
Report Date: 09-Jul-10

Client Project: MP602 Totes
Client Sample ID: MP602 #03
Collection Date: 7/2/2010 8:35:00 AM
Matrix: AQUEOUS

Analyses	Certification	RL	Qual	Result	Units	DF	Date Analyzed	Analyst
EPA 600 4.1.4, 200.7R4.4, METALS BY ICP (TOTAL)								
Cadmium	NELAP	0.0200		< 0.0200	mg/L	10	7/8/2010 6:26:34 AM	LAL
Chromium	NELAP	0.100	J	0.068	mg/L	10	7/6/2010 11:51:46 PM	LAL
Copper	NELAP	0.100		< 0.100	mg/L	10	7/6/2010 11:51:46 PM	LAL
Iron	NELAP	0.200		0.710	mg/L	10	7/6/2010 11:51:46 PM	LAL
Lead	NELAP	0.400		< 0.400	mg/L	10	7/8/2010 6:26:34 AM	LAL
Nickel	NELAP	0.100	J	0.097	mg/L	10	7/6/2010 11:51:46 PM	LAL
Zinc	NELAP	0.100	J	0.021	mg/L	10	7/6/2010 11:51:46 PM	LAL
EPA 600 410.4								
Chemical Oxygen Demand	NELAP	20000		270000	mg/L	400	7/7/2010 10:00:00 AM	BSJ
EPA 600 624, VOLATILE ORGANIC COMPOUNDS BY GC/MS								
1,1,1-Trichloroethane	NELAP	500		ND	µg/L	100	7/6/2010 7:19:00 PM	CCF
1,1,2,2-Tetrachloroethane	NELAP	500		ND	µg/L	100	7/6/2010 7:19:00 PM	CCF
1,1,2-Trichloroethane	NELAP	500		ND	µg/L	100	7/6/2010 7:19:00 PM	CCF
1,1-Dichloroethane	NELAP	500		ND	µg/L	100	7/6/2010 7:19:00 PM	CCF
1,1-Dichloroethene	NELAP	500		ND	µg/L	100	7/6/2010 7:19:00 PM	CCF
1,2-Dichlorobenzene	NELAP	500		ND	µg/L	100	7/6/2010 7:19:00 PM	CCF
1,2-Dichloroethane	NELAP	500		ND	µg/L	100	7/6/2010 7:19:00 PM	CCF
1,2-Dichloropropane	NELAP	500		ND	µg/L	100	7/6/2010 7:19:00 PM	CCF
1,3-Dichlorobenzene	NELAP	500		ND	µg/L	100	7/6/2010 7:19:00 PM	CCF
1,4-Dichlorobenzene	NELAP	500		ND	µg/L	100	7/6/2010 7:19:00 PM	CCF
2-Chloroethyl vinyl ether	NELAP	2000		ND	µg/L	100	7/6/2010 7:19:00 PM	CCF
Acrolein	NELAP	10000		ND	µg/L	100	7/6/2010 7:19:00 PM	CCF
Acrylonitrile	NELAP	500		ND	µg/L	100	7/6/2010 7:19:00 PM	CCF
Benzene	NELAP	200		ND	µg/L	100	7/6/2010 7:19:00 PM	CCF
Bromodichloromethane	NELAP	500		ND	µg/L	100	7/6/2010 7:19:00 PM	CCF
Bromoform	NELAP	500		ND	µg/L	100	7/6/2010 7:19:00 PM	CCF
Bromomethane	NELAP	1000		ND	µg/L	100	7/6/2010 7:19:00 PM	CCF
Carbon tetrachloride	NELAP	500		ND	µg/L	100	7/6/2010 7:19:00 PM	CCF
Chlorobenzene	NELAP	500		ND	µg/L	100	7/6/2010 7:19:00 PM	CCF
Chloroethane	NELAP	1000		ND	µg/L	100	7/6/2010 7:19:00 PM	CCF
Chloroform	NELAP	500		ND	µg/L	100	7/6/2010 7:19:00 PM	CCF
Chloromethane	NELAP	1000		ND	µg/L	100	7/6/2010 7:19:00 PM	CCF
cis-1,3-Dichloropropene	NELAP	500		ND	µg/L	100	7/6/2010 7:19:00 PM	CCF
Dibromochloromethane	NELAP	500		ND	µg/L	100	7/6/2010 7:19:00 PM	CCF
Ethylbenzene	NELAP	500		ND	µg/L	100	7/6/2010 7:19:00 PM	CCF
Methylene chloride	NELAP	500		ND	µg/L	100	7/6/2010 7:19:00 PM	CCF
Tetrachloroethene	NELAP	500		ND	µg/L	100	7/6/2010 7:19:00 PM	CCF
Toluene	NELAP	200		463	µg/L	100	7/6/2010 7:19:00 PM	CCF

TEKLAB, INC.

5445 HORSESHOE LAKE ROAD
COLLINSVILLE, ILLINOIS 62234

ENVIRONMENTAL TESTING LABORATORY

TEL: 618-344-1004
FAX: 618-344-1005

LABORATORY RESULTS

Client: Mallinckrodt Inc.
WorkOrder: 10070122
Lab ID: 10070122-003
Report Date: 09-Jul-10

Client Project: MP602 Totes
Client Sample ID: MP602 #03
Collection Date: 7/2/2010 8:35:00 AM
Matrix: AQUEOUS

Analyses	Certification	RL	Qual	Result	Units	DF	Date Analyzed	Analyst
EPA 600 624, VOLATILE ORGANIC COMPOUNDS BY GC/MS								
trans-1,2-Dichloroethene	NELAP	500		ND	µg/L	100	7/6/2010 7:19:00 PM	CCF
trans-1,3-Dichloropropene	NELAP	500		ND	µg/L	100	7/6/2010 7:19:00 PM	CCF
Trichloroethene	NELAP	500		ND	µg/L	100	7/6/2010 7:19:00 PM	CCF
Vinyl chloride	NELAP	200		ND	µg/L	100	7/6/2010 7:19:00 PM	CCF
Xylenes, Total	NELAP	500		ND	µg/L	100	7/6/2010 7:19:00 PM	CCF
Surr: 1,2-Dichloroethane-d4		74.7-129		120.3	%REC	100	7/6/2010 7:19:00 PM	CCF
Surr: 4-Bromofluorobenzene		86-119		107.4	%REC	100	7/6/2010 7:19:00 PM	CCF
Surr: Dibromofluoromethane		81.7-123		107.2	%REC	100	7/6/2010 7:19:00 PM	CCF
Surr: Toluene-d8		84.3-114		99.0	%REC	100	7/6/2010 7:19:00 PM	CCF
STANDARD METHODS 18TH ED. 2540 D								
Total Suspended Solids	NELAP	6		15100	mg/L	1	7/7/2010 9:00:00 AM	BSJ

Sample Narrative

EPA 600 4.1.4, 200.7R4.4, Metals by ICP (Total)

Elevated reporting limit due to high levels of target and/or non-target analytes.

EPA 600 624, Volatile Organic Compounds by GC/MS

Elevated reporting limit due to sample composition.

pH 6.0

TEKLAB, INC.

5445 HORSESHOE LAKE ROAD
COLLINSVILLE, ILLINOIS 62234

ENVIRONMENTAL TESTING LABORATORY

TEL: 618-344-1004
FAX: 618-344-1005

LABORATORY RESULTS

Client: Mallinckrodt Inc.
WorkOrder: 10070122
Lab ID: 10070122-004
Report Date: 09-Jul-10

Client Project: MP602 Totes
Client Sample ID: MP602 #04
Collection Date: 7/2/2010 8:45:00 AM
Matrix: AQUEOUS

Analyses	Certification	RL	Qual	Result	Units	DF	Date Analyzed	Analyst
EPA 600 4.1.4, 200.7R4.4, METALS BY ICP (TOTAL)								
Cadmium	NELAP	0.0200		< 0.0200	mg/L	10	7/8/2010 6:33:17 AM	LAL
Chromium	NELAP	0.100	J	0.042	mg/L	10	7/6/2010 11:58:30 PM	LAL
Copper	NELAP	0.100		< 0.100	mg/L	10	7/6/2010 11:58:30 PM	LAL
Iron	NELAP	0.200		1.41	mg/L	10	7/6/2010 11:58:30 PM	LAL
Lead	NELAP	0.400		< 0.400	mg/L	10	7/8/2010 6:33:17 AM	LAL
Nickel	NELAP	0.100	J	0.083	mg/L	10	7/6/2010 11:58:30 PM	LAL
Zinc	NELAP	0.100		< 0.100	mg/L	10	7/6/2010 11:58:30 PM	LAL
EPA 600 410.4								
Chemical Oxygen Demand	NELAP	20000		251000	mg/L	400	7/7/2010 10:00:00 AM	BSJ
EPA 600 624, VOLATILE ORGANIC COMPOUNDS BY GC/MS								
1,1,1-Trichloroethane	NELAP	500		ND	µg/L	100	7/6/2010 7:51:00 PM	CCF
1,1,2,2-Tetrachloroethane	NELAP	500		ND	µg/L	100	7/6/2010 7:51:00 PM	CCF
1,1,2-Trichloroethane	NELAP	500		ND	µg/L	100	7/6/2010 7:51:00 PM	CCF
1,1-Dichloroethane	NELAP	500		ND	µg/L	100	7/6/2010 7:51:00 PM	CCF
1,1-Dichloroethene	NELAP	500		ND	µg/L	100	7/6/2010 7:51:00 PM	CCF
1,2-Dichlorobenzene	NELAP	500		ND	µg/L	100	7/6/2010 7:51:00 PM	CCF
1,2-Dichloroethane	NELAP	500		ND	µg/L	100	7/6/2010 7:51:00 PM	CCF
1,2-Dichloropropane	NELAP	500		ND	µg/L	100	7/6/2010 7:51:00 PM	CCF
1,3-Dichlorobenzene	NELAP	500		ND	µg/L	100	7/6/2010 7:51:00 PM	CCF
1,4-Dichlorobenzene	NELAP	500		ND	µg/L	100	7/6/2010 7:51:00 PM	CCF
2-Chloroethyl vinyl ether	NELAP	2000		ND	µg/L	100	7/6/2010 7:51:00 PM	CCF
Acrolein	NELAP	10000		ND	µg/L	100	7/6/2010 7:51:00 PM	CCF
Acrylonitrile	NELAP	500		ND	µg/L	100	7/6/2010 7:51:00 PM	CCF
Benzene	NELAP	200		ND	µg/L	100	7/6/2010 7:51:00 PM	CCF
Bromodichloromethane	NELAP	500		ND	µg/L	100	7/6/2010 7:51:00 PM	CCF
Bromoform	NELAP	500		ND	µg/L	100	7/6/2010 7:51:00 PM	CCF
Bromomethane	NELAP	1000		ND	µg/L	100	7/6/2010 7:51:00 PM	CCF
Carbon tetrachloride	NELAP	500		ND	µg/L	100	7/6/2010 7:51:00 PM	CCF
Chlorobenzene	NELAP	500		ND	µg/L	100	7/6/2010 7:51:00 PM	CCF
Chloroethane	NELAP	1000		ND	µg/L	100	7/6/2010 7:51:00 PM	CCF
Chloroform	NELAP	500		ND	µg/L	100	7/6/2010 7:51:00 PM	CCF
Chloromethane	NELAP	1000		ND	µg/L	100	7/6/2010 7:51:00 PM	CCF
cis-1,3-Dichloropropene	NELAP	500		ND	µg/L	100	7/6/2010 7:51:00 PM	CCF
Dibromochloromethane	NELAP	500		ND	µg/L	100	7/6/2010 7:51:00 PM	CCF
Ethylbenzene	NELAP	500		ND	µg/L	100	7/6/2010 7:51:00 PM	CCF
Methylene chloride	NELAP	500		ND	µg/L	100	7/6/2010 7:51:00 PM	CCF
Tetrachloroethene	NELAP	500		ND	µg/L	100	7/6/2010 7:51:00 PM	CCF
Toluene	NELAP	200		ND	µg/L	100	7/6/2010 7:51:00 PM	CCF

TEKLAB, INC.

5445 HORSESHOE LAKE ROAD
COLLINSVILLE, ILLINOIS 62234

ENVIRONMENTAL TESTING LABORATORY

TEL: 618-344-1004
FAX: 618-344-1005

LABORATORY RESULTS

Client: Mallinckrodt Inc.
WorkOrder: 10070122
Lab ID: 10070122-004
Report Date: 09-Jul-10

Client Project: MP602 Totes
Client Sample ID: MP602 #04
Collection Date: 7/2/2010 8:45:00 AM
Matrix: AQUEOUS

Analyses	Certification	RL	Qual	Result	Units	DF	Date Analyzed	Analyst
EPA 600 624, VOLATILE ORGANIC COMPOUNDS BY GC/MS								
trans-1,2-Dichloroethene	NELAP	500		**ND**	µg/L	100	7/6/2010 7:51:00 PM	CCF
trans-1,3-Dichloropropene	NELAP	500		**ND**	µg/L	100	7/6/2010 7:51:00 PM	CCF
Trichloroethene	NELAP	500		**ND**	µg/L	100	7/6/2010 7:51:00 PM	CCF
Vinyl chloride	NELAP	200		**ND**	µg/L	100	7/6/2010 7:51:00 PM	CCF
Xylenes, Total	NELAP	500		**ND**	µg/L	100	7/6/2010 7:51:00 PM	CCF
Surr: 1,2-Dichloroethane-d4		74.7-129		**117.5**	%REC	100	7/6/2010 7:51:00 PM	CCF
Surr: 4-Bromofluorobenzene		86-119		**106.1**	%REC	100	7/6/2010 7:51:00 PM	CCF
Surr: Dibromofluoromethane		81.7-123		**106.5**	%REC	100	7/6/2010 7:51:00 PM	CCF
Surr: Toluene-d8		84.3-114		**99.7**	%REC	100	7/6/2010 7:51:00 PM	CCF
STANDARD METHODS 18TH ED. 2540 D								
Total Suspended Solids	NELAP	6		**16500**	mg/L	1	7/7/2010 9:00:00 AM	BSJ

Sample Narrative

EPA 600 4.1.4, 200.7R4.4, Metals by ICP (Total)

Elevated reporting limit due to high levels of target and/or non-target analytes.

EPA 600 624, Volatile Organic Compounds by GC/MS

Elevated reporting limit due to sample composition.

pH 6.0

TEKLAB, INC.

5445 HORSESHOE LAKE ROAD
COLLINSVILLE, ILLINOIS 62234

ENVIRONMENTAL TESTING LABORATORY

TEL: 618-344-1004
FAX: 618-344-1005

LABORATORY RESULTS

Client: Mallinckrodt Inc.
WorkOrder: 10070122
Lab ID: 10070122-005
Report Date: 09-Jul-10

Client Project: MP602 Totes
Client Sample ID: MP602 #05
Collection Date: 7/2/2010 8:55:00 AM
Matrix: AQUEOUS

Analyses	Certification	RL	Qual	Result	Units	DF	Date Analyzed	Analyst
EPA 600 4.1.4, 200.7R4.4, METALS BY ICP (TOTAL)								
Cadmium	NELAP	0.0200		< 0.0200	mg/L	10	7/8/2010 6:40:01 AM	LAL
Chromium	NELAP	0.100	J	0.052	mg/L	10	7/7/2010 12:05:15 AM	LAL
Copper	NELAP	0.100		< 0.100	mg/L	10	7/7/2010 12:05:15 AM	LAL
Iron	NELAP	0.200		0.643	mg/L	10	7/7/2010 12:05:15 AM	LAL
Lead	NELAP	0.400		< 0.400	mg/L	10	7/8/2010 6:40:01 AM	LAL
Nickel	NELAP	0.100		0.113	mg/L	10	7/7/2010 12:05:15 AM	LAL
Zinc	NELAP	0.100	J	0.021	mg/L	10	7/7/2010 12:05:15 AM	LAL
EPA 600 410.4								
Chemical Oxygen Demand	NELAP	20000		245000	mg/L	400	7/7/2010 10:00:00 AM	BSJ
EPA 600 624, VOLATILE ORGANIC COMPOUNDS BY GC/MS								
1,1,1-Trichloroethane	NELAP	2500		ND	µg/L	500	7/7/2010 7:56:00 PM	CCF
1,1,2,2-Tetrachloroethane	NELAP	2500		ND	µg/L	500	7/7/2010 7:56:00 PM	CCF
1,1,2-Trichloroethane	NELAP	2500		ND	µg/L	500	7/7/2010 7:56:00 PM	CCF
1,1-Dichloroethane	NELAP	2500		ND	µg/L	500	7/7/2010 7:56:00 PM	CCF
1,1-Dichloroethene	NELAP	2500		ND	µg/L	500	7/7/2010 7:56:00 PM	CCF
1,2-Dichlorobenzene	NELAP	2500		ND	µg/L	500	7/7/2010 7:56:00 PM	CCF
1,2-Dichloroethane	NELAP	2500		ND	µg/L	500	7/7/2010 7:56:00 PM	CCF
1,2-Dichloropropane	NELAP	2500		ND	µg/L	500	7/7/2010 7:56:00 PM	CCF
1,3-Dichlorobenzene	NELAP	2500		ND	µg/L	500	7/7/2010 7:56:00 PM	CCF
1,4-Dichlorobenzene	NELAP	2500		ND	µg/L	500	7/7/2010 7:56:00 PM	CCF
2-Chloroethyl vinyl ether	NELAP	10000		ND	µg/L	500	7/7/2010 7:56:00 PM	CCF
Acrolein	NELAP	50000		ND	µg/L	500	7/7/2010 7:56:00 PM	CCF
Acrylonitrile	NELAP	2500		ND	µg/L	500	7/7/2010 7:56:00 PM	CCF
Benzene	NELAP	1000		ND	µg/L	500	7/7/2010 7:56:00 PM	CCF
Bromodichloromethane	NELAP	2500		ND	µg/L	500	7/7/2010 7:56:00 PM	CCF
Bromoform	NELAP	2500		ND	µg/L	500	7/7/2010 7:56:00 PM	CCF
Bromomethane	NELAP	5000		ND	µg/L	500	7/7/2010 7:56:00 PM	CCF
Carbon tetrachloride	NELAP	2500		ND	µg/L	500	7/7/2010 7:56:00 PM	CCF
Chlorobenzene	NELAP	2500		ND	µg/L	500	7/7/2010 7:56:00 PM	CCF
Chloroethane	NELAP	5000		ND	µg/L	500	7/7/2010 7:56:00 PM	CCF
Chloroform	NELAP	2500		ND	µg/L	500	7/7/2010 7:56:00 PM	CCF
Chloromethane	NELAP	5000		ND	µg/L	500	7/7/2010 7:56:00 PM	CCF
cis-1,3-Dichloropropene	NELAP	2500		ND	µg/L	500	7/7/2010 7:56:00 PM	CCF
Dibromochloromethane	NELAP	2500		ND	µg/L	500	7/7/2010 7:56:00 PM	CCF
Ethylbenzene	NELAP	2500		ND	µg/L	500	7/7/2010 7:56:00 PM	CCF
Methylene chloride	NELAP	2500		ND	µg/L	500	7/7/2010 7:56:00 PM	CCF
Tetrachloroethene	NELAP	2500		ND	µg/L	500	7/7/2010 7:56:00 PM	CCF
Toluene	NELAP	1000		49200	µg/L	500	7/7/2010 7:56:00 PM	CCF

TEKLAB, INC.

5445 HORSESHOE LAKE ROAD
COLLINSVILLE, ILLINOIS 62234

ENVIRONMENTAL TESTING LABORATORY

TEL: 618-344-1004
FAX: 618-344-1005

LABORATORY RESULTS

Client: Mallinckrodt Inc.
WorkOrder: 10070122
Lab ID: 10070122-005
Report Date: 09-Jul-10

Client Project: MP602 Totes
Client Sample ID: MP602 #05
Collection Date: 7/2/2010 8:55:00 AM
Matrix: AQUEOUS

Analyses	Certification	RL	Qual	Result	Units	DF	Date Analyzed	Analyst
EPA 600 624, VOLATILE ORGANIC COMPOUNDS BY GC/MS								
trans-1,2-Dichloroethene	NELAP	2500		**ND**	µg/L	500	7/7/2010 7:56:00 PM	CCF
trans-1,3-Dichloropropene	NELAP	2500		**ND**	µg/L	500	7/7/2010 7:56:00 PM	CCF
Trichloroethene	NELAP	2500		**ND**	µg/L	500	7/7/2010 7:56:00 PM	CCF
Vinyl chloride	NELAP	1000		**ND**	µg/L	500	7/7/2010 7:56:00 PM	CCF
Xylenes, Total	NELAP	2500		**ND**	µg/L	500	7/7/2010 7:56:00 PM	CCF
Surr: 1,2-Dichloroethane-d4		74.7-129		**112.5**	%REC	500	7/7/2010 7:56:00 PM	CCF
Surr: 4-Bromofluorobenzene		86-119		**104.4**	%REC	500	7/7/2010 7:56:00 PM	CCF
Surr: Dibromofluoromethane		81.7-123		**108.1**	%REC	500	7/7/2010 7:56:00 PM	CCF
Surr: Toluene-d8		84.3-114		**95.9**	%REC	500	7/7/2010 7:56:00 PM	CCF
STANDARD METHODS 18TH ED. 2540 D								
Total Suspended Solids	NELAP	6		**8340**	mg/L	1	7/7/2010 9:00:00 AM	BSJ

Sample Narrative

EPA 600 4.1.4, 200.7R4.4, Metals by ICP (Total)

Elevated reporting limit due to high levels of target and/or non-target analytes.

EPA 600 624, Volatile Organic Compounds by GC/MS

Elevated reporting limit due to high levels of target and/or non-target analytes.

pH 5.5

TEKLAB, INC.

5445 HORSESHOE LAKE ROAD
COLLINSVILLE, ILLINOIS 62234

ENVIRONMENTAL TESTING LABORATORY

TEL: 618-344-1004
FAX: 618-344-1005

LABORATORY RESULTS

Client: Mallinckrodt Inc.
WorkOrder: 10070122
Lab ID: 10070122-006
Report Date: 09-Jul-10

Client Project: MP602 Totes
Client Sample ID: MP602 #06
Collection Date: 7/2/2010 9:00:00 AM
Matrix: AQUEOUS

Analyses	Certification	RL	Qual	Result	Units	DF	Date Analyzed	Analyst
EPA 600 4.1.4, 200.7R4.4, METALS BY ICP (TOTAL)								
Cadmium	NELAP	0.0200		**< 0.0200**	mg/L	10	7/8/2010 7:12:31 AM	LAL
Chromium	NELAP	0.100	J	**0.047**	mg/L	10	7/7/2010 12:31:11 AM	LAL
Copper	NELAP	0.100		**< 0.100**	mg/L	10	7/7/2010 12:31:11 AM	LAL
Iron	NELAP	0.200		**0.628**	mg/L	10	7/7/2010 12:31:11 AM	LAL
Lead	NELAP	0.400		**< 0.400**	mg/L	10	7/8/2010 7:12:31 AM	LAL
Nickel	NELAP	0.100		**0.108**	mg/L	10	7/7/2010 12:31:11 AM	LAL
Zinc	NELAP	0.100	J	**0.023**	mg/L	10	7/7/2010 12:31:11 AM	LAL
EPA 600 410.4								
Chemical Oxygen Demand	NELAP	20000		**222000**	mg/L	400	7/7/2010 10:00:00 AM	BSJ
EPA 600 624, VOLATILE ORGANIC COMPOUNDS BY GC/MS								
1,1,1-Trichloroethane	NELAP	1250		**ND**	µg/L	250	7/7/2010 8:27:00 PM	CCF
1,1,2,2-Tetrachloroethane	NELAP	1250		**ND**	µg/L	250	7/7/2010 8:27:00 PM	CCF
1,1,2-Trichloroethane	NELAP	1250		**ND**	µg/L	250	7/7/2010 8:27:00 PM	CCF
1,1-Dichloroethane	NELAP	1250		**ND**	µg/L	250	7/7/2010 8:27:00 PM	CCF
1,1-Dichloroethene	NELAP	1250		**ND**	µg/L	250	7/7/2010 8:27:00 PM	CCF
1,2-Dichlorobenzene	NELAP	1250		**ND**	µg/L	250	7/7/2010 8:27:00 PM	CCF
1,2-Dichloroethane	NELAP	1250		**ND**	µg/L	250	7/7/2010 8:27:00 PM	CCF
1,2-Dichloropropane	NELAP	1250		**ND**	µg/L	250	7/7/2010 8:27:00 PM	CCF
1,3-Dichlorobenzene	NELAP	1250		**ND**	µg/L	250	7/7/2010 8:27:00 PM	CCF
1,4-Dichlorobenzene	NELAP	1250		**ND**	µg/L	250	7/7/2010 8:27:00 PM	CCF
2-Chloroethyl vinyl ether	NELAP	5000		**ND**	µg/L	250	7/7/2010 8:27:00 PM	CCF
Acrolein	NELAP	25000		**ND**	µg/L	250	7/7/2010 8:27:00 PM	CCF
Acrylonitrile	NELAP	1250		**ND**	µg/L	250	7/7/2010 8:27:00 PM	CCF
Benzene	NELAP	500		**ND**	µg/L	250	7/7/2010 8:27:00 PM	CCF
Bromodichloromethane	NELAP	1250		**ND**	µg/L	250	7/7/2010 8:27:00 PM	CCF
Bromoform	NELAP	1250		**ND**	µg/L	250	7/7/2010 8:27:00 PM	CCF
Bromomethane	NELAP	2500		**ND**	µg/L	250	7/7/2010 8:27:00 PM	CCF
Carbon tetrachloride	NELAP	1250		**ND**	µg/L	250	7/7/2010 8:27:00 PM	CCF
Chlorobenzene	NELAP	1250		**ND**	µg/L	250	7/7/2010 8:27:00 PM	CCF
Chloroethane	NELAP	2500		**ND**	µg/L	250	7/7/2010 8:27:00 PM	CCF
Chloroform	NELAP	1250		**ND**	µg/L	250	7/7/2010 8:27:00 PM	CCF
Chloromethane	NELAP	2500		**ND**	µg/L	250	7/7/2010 8:27:00 PM	CCF
cis-1,3-Dichloropropene	NELAP	1250		**ND**	µg/L	250	7/7/2010 8:27:00 PM	CCF
Dibromochloromethane	NELAP	1250		**ND**	µg/L	250	7/7/2010 8:27:00 PM	CCF
Ethylbenzene	NELAP	1250		**ND**	µg/L	250	7/7/2010 8:27:00 PM	CCF
Methylene chloride	NELAP	1250		**ND**	µg/L	250	7/7/2010 8:27:00 PM	CCF
Tetrachloroethene	NELAP	1250		**ND**	µg/L	250	7/7/2010 8:27:00 PM	CCF
Toluene	NELAP	500		**31300**	µg/L	250	7/7/2010 8:27:00 PM	CCF

TEKLAB, INC.

5445 HORSESHOE LAKE ROAD
COLLINSVILLE, ILLINOIS 62234

ENVIRONMENTAL TESTING LABORATORY

TEL: 618-344-1004
FAX: 618-344-1005

LABORATORY RESULTS

Client: Mallinckrodt Inc.
WorkOrder: 10070122
Lab ID: 10070122-006
Report Date: 09-Jul-10

Client Project: MP602 Totes
Client Sample ID: MP602 #06
Collection Date: 7/2/2010 9:00:00 AM
Matrix: AQUEOUS

Analyses	Certification	RL	Qual	Result	Units	DF	Date Analyzed	Analyst
EPA 600 624, VOLATILE ORGANIC COMPOUNDS BY GC/MS								
trans-1,2-Dichloroethene	NELAP	1250		ND	µg/L	250	7/7/2010 8:27:00 PM	CCF
trans-1,3-Dichloropropene	NELAP	1250		ND	µg/L	250	7/7/2010 8:27:00 PM	CCF
Trichloroethene	NELAP	1250		ND	µg/L	250	7/7/2010 8:27:00 PM	CCF
Vinyl chloride	NELAP	500		ND	µg/L	250	7/7/2010 8:27:00 PM	CCF
Xylenes, Total	NELAP	1250		ND	µg/L	250	7/7/2010 8:27:00 PM	CCF
Surr: 1,2-Dichloroethane-d4		74.7-129		112.1	%REC	250	7/7/2010 8:27:00 PM	CCF
Surr: 4-Bromofluorobenzene		86-119		107.0	%REC	250	7/7/2010 8:27:00 PM	CCF
Surr: Dibromofluoromethane		81.7-123		108.1	%REC	250	7/7/2010 8:27:00 PM	CCF
Surr: Toluene-d8		84.3-114		95.5	%REC	250	7/7/2010 8:27:00 PM	CCF
STANDARD METHODS 18TH ED. 2540 D								
Total Suspended Solids	NELAP	6		15600	mg/L	1	7/7/2010 9:00:00 AM	BSJ

Sample Narrative

EPA 600 4.1.4, 200.7R4.4, Metals by ICP (Total)

Elevated reporting limit due to high levels of target and/or non-target analytes.

EPA 600 624, Volatile Organic Compounds by GC/MS

Elevated reporting limit due to high levels of target and/or non-target analytes.

pH 5.5

TEKLAB, INC.

5445 HORSESHOE LAKE ROAD
COLLINSVILLE, ILLINOIS 62234

ENVIRONMENTAL TESTING LABORATORY

TEL: 618-344-1004
FAX: 618-344-1005

LABORATORY RESULTS

Client: Mallinckrodt Inc.
WorkOrder: 10070122
Lab ID: 10070122-007
Report Date: 09-Jul-10

Client Project: MP602 Totes
Client Sample ID: MP602 #07
Collection Date: 7/2/2010 9:05:00 AM
Matrix: AQUEOUS

Analyses	Certification	RL	Qual	Result	Units	DF	Date Analyzed	Analyst
EPA 600 4.1.4, 200.7R4.4, METALS BY ICP (TOTAL)								
Cadmium	NELAP	0.0200		< 0.0200	mg/L	10	7/8/2010 7:19:15 AM	LAL
Chromium	NELAP	0.100		0.123	mg/L	10	7/8/2010 7:19:15 AM	LAL
Copper	NELAP	0.100		0.130	mg/L	10	7/8/2010 7:19:15 AM	LAL
Iron	NELAP	0.200		1.47	mg/L	10	7/8/2010 7:19:15 AM	LAL
Lead	NELAP	0.400		< 0.400	mg/L	10	7/8/2010 7:19:15 AM	LAL
Nickel	NELAP	0.100		0.159	mg/L	10	7/8/2010 7:19:15 AM	LAL
Zinc	NELAP	0.100	J	0.098	mg/L	10	7/8/2010 7:19:15 AM	LAL
EPA 600 410.4								
Chemical Oxygen Demand	NELAP	20000		276000	mg/L	400	7/7/2010 10:00:00 AM	BSJ
EPA 600 624, VOLATILE ORGANIC COMPOUNDS BY GC/MS								
1,1,1-Trichloroethane	NELAP	1250		ND	µg/L	250	7/7/2010 8:59:00 PM	CCF
1,1,2,2-Tetrachloroethane	NELAP	1250		ND	µg/L	250	7/7/2010 8:59:00 PM	CCF
1,1,2-Trichloroethane	NELAP	1250		ND	µg/L	250	7/7/2010 8:59:00 PM	CCF
1,1-Dichloroethane	NELAP	1250		ND	µg/L	250	7/7/2010 8:59:00 PM	CCF
1,1-Dichloroethene	NELAP	1250		ND	µg/L	250	7/7/2010 8:59:00 PM	CCF
1,2-Dichlorobenzene	NELAP	1250		ND	µg/L	250	7/7/2010 8:59:00 PM	CCF
1,2-Dichloroethane	NELAP	1250		ND	µg/L	250	7/7/2010 8:59:00 PM	CCF
1,2-Dichloropropane	NELAP	1250		ND	µg/L	250	7/7/2010 8:59:00 PM	CCF
1,3-Dichlorobenzene	NELAP	1250		ND	µg/L	250	7/7/2010 8:59:00 PM	CCF
1,4-Dichlorobenzene	NELAP	1250		ND	µg/L	250	7/7/2010 8:59:00 PM	CCF
2-Chloroethyl vinyl ether	NELAP	5000		ND	µg/L	250	7/7/2010 8:59:00 PM	CCF
Acrolein	NELAP	25000		ND	µg/L	250	7/7/2010 8:59:00 PM	CCF
Acrylonitrile	NELAP	1250		ND	µg/L	250	7/7/2010 8:59:00 PM	CCF
Benzene	NELAP	500		ND	µg/L	250	7/7/2010 8:59:00 PM	CCF
Bromodichloromethane	NELAP	1250		ND	µg/L	250	7/7/2010 8:59:00 PM	CCF
Bromoform	NELAP	1250		ND	µg/L	250	7/7/2010 8:59:00 PM	CCF
Bromomethane	NELAP	2500		ND	µg/L	250	7/7/2010 8:59:00 PM	CCF
Carbon tetrachloride	NELAP	1250		ND	µg/L	250	7/7/2010 8:59:00 PM	CCF
Chlorobenzene	NELAP	1250		ND	µg/L	250	7/7/2010 8:59:00 PM	CCF
Chloroethane	NELAP	2500		ND	µg/L	250	7/7/2010 8:59:00 PM	CCF
Chloroform	NELAP	1250		3260	µg/L	250	7/7/2010 8:59:00 PM	CCF
Chloromethane	NELAP	2500		ND	µg/L	250	7/7/2010 8:59:00 PM	CCF
cis-1,3-Dichloropropene	NELAP	1250		ND	µg/L	250	7/7/2010 8:59:00 PM	CCF
Dibromochloromethane	NELAP	1250		ND	µg/L	250	7/7/2010 8:59:00 PM	CCF
Ethylbenzene	NELAP	1250		ND	µg/L	250	7/7/2010 8:59:00 PM	CCF
Methylene chloride	NELAP	1250		ND	µg/L	250	7/7/2010 8:59:00 PM	CCF
Tetrachloroethene	NELAP	1250		ND	µg/L	250	7/7/2010 8:59:00 PM	CCF
Toluene	NELAP	500		24900	µg/L	250	7/7/2010 8:59:00 PM	CCF

TEKLAB, INC.

5445 HORSESHOE LAKE ROAD
COLLINSVILLE, ILLINOIS 62234

ENVIRONMENTAL TESTING LABORATORY

TEL: 618-344-1004
FAX: 618-344-1005

LABORATORY RESULTS

Client: Mallinckrodt Inc.
WorkOrder: 10070122
Lab ID: 10070122-007
Report Date: 09-Jul-10

Client Project: MP602 Totes
Client Sample ID: MP602 #07
Collection Date: 7/2/2010 9:05:00 AM
Matrix: AQUEOUS

Analyses	Certification	RL	Qual	Result	Units	DF	Date Analyzed	Analyst
EPA 600 624, VOLATILE ORGANIC COMPOUNDS BY GC/MS								
trans-1,2-Dichloroethene	NELAP	1250		**ND**	µg/L	250	7/7/2010 8:59:00 PM	CCF
trans-1,3-Dichloropropene	NELAP	1250		**ND**	µg/L	250	7/7/2010 8:59:00 PM	CCF
Trichloroethene	NELAP	1250		**ND**	µg/L	250	7/7/2010 8:59:00 PM	CCF
Vinyl chloride	NELAP	500		**ND**	µg/L	250	7/7/2010 8:59:00 PM	CCF
Xylenes, Total	NELAP	1250		**ND**	µg/L	250	7/7/2010 8:59:00 PM	CCF
Surr: 1,2-Dichloroethane-d4		74.7-129		**113.3**	%REC	250	7/7/2010 8:59:00 PM	CCF
Surr: 4-Bromofluorobenzene		86-119		**106.4**	%REC	250	7/7/2010 8:59:00 PM	CCF
Surr: Dibromofluoromethane		81.7-123		**107.4**	%REC	250	7/7/2010 8:59:00 PM	CCF
Surr: Toluene-d8		84.3-114		**97.4**	%REC	250	7/7/2010 8:59:00 PM	CCF
STANDARD METHODS 18TH ED. 2540 D								
Total Suspended Solids	NELAP	6		**15600**	mg/L	1	7/7/2010 9:00:00 AM	BSJ

Sample Narrative

EPA 600 4.1.4, 200.7R4.4, Metals by ICP (Total)

Elevated reporting limit due to high levels of target and/or non-target analytes.

EPA 600 624, Volatile Organic Compounds by GC/MS

Elevated reporting limit due to high levels of target and/or non-target analytes.

pH 6.5

TEKLAB, INC.

5445 HORSESHOE LAKE ROAD
COLLINSVILLE, ILLINOIS 62234

ENVIRONMENTAL TESTING LABORATORY

TEL: 618-344-1004
FAX: 618-344-1005

LABORATORY RESULTS

Client: Mallinckrodt Inc.
WorkOrder: 10070122
Lab ID: 10070122-008
Report Date: 09-Jul-10

Client Project: MP602 Totes
Client Sample ID: MP602 #08
Collection Date: 7/2/2010 9:10:00 AM
Matrix: AQUEOUS

Analyses	Certification	RL	Qual	Result	Units	DF	Date Analyzed	Analyst
EPA 600 4.1.4, 200.7R4.4, METALS BY ICP (TOTAL)								
Cadmium	NELAP	0.0200		< 0.0200	mg/L	10	7/8/2010 7:26:11 AM	LAL
Chromium	NELAP	0.100		< 0.100	mg/L	10	7/7/2010 12:44:54 AM	LAL
Copper	NELAP	0.100		< 0.100	mg/L	10	7/7/2010 12:44:54 AM	LAL
Iron	NELAP	0.200		0.875	mg/L	10	7/7/2010 12:44:54 AM	LAL
Lead	NELAP	0.400		< 0.400	mg/L	10	7/8/2010 7:26:11 AM	LAL
Nickel	NELAP	0.100	J	0.087	mg/L	10	7/7/2010 12:44:54 AM	LAL
Zinc	NELAP	0.100	J	0.025	mg/L	10	7/7/2010 12:44:54 AM	LAL
EPA 600 410.4								
Chemical Oxygen Demand	NELAP	20000		139000	mg/L	400	7/7/2010 10:00:00 AM	BSJ
EPA 600 624, VOLATILE ORGANIC COMPOUNDS BY GC/MS								
1,1,1-Trichloroethane	NELAP	2500		ND	µg/L	500	7/8/2010 4:51:00 PM	TAL
1,1,2,2-Tetrachloroethane	NELAP	2500		ND	µg/L	500	7/8/2010 4:51:00 PM	TAL
1,1,2-Trichloroethane	NELAP	2500		ND	µg/L	500	7/8/2010 4:51:00 PM	TAL
1,1-Dichloroethane	NELAP	2500		ND	µg/L	500	7/8/2010 4:51:00 PM	TAL
1,1-Dichloroethene	NELAP	2500		ND	µg/L	500	7/8/2010 4:51:00 PM	TAL
1,2-Dichlorobenzene	NELAP	2500		ND	µg/L	500	7/8/2010 4:51:00 PM	TAL
1,2-Dichloroethane	NELAP	2500		ND	µg/L	500	7/8/2010 4:51:00 PM	TAL
1,2-Dichloropropane	NELAP	2500		ND	µg/L	500	7/8/2010 4:51:00 PM	TAL
1,3-Dichlorobenzene	NELAP	2500		ND	µg/L	500	7/8/2010 4:51:00 PM	TAL
1,4-Dichlorobenzene	NELAP	2500		ND	µg/L	500	7/8/2010 4:51:00 PM	TAL
2-Chloroethyl vinyl ether	NELAP	10000		ND	µg/L	500	7/8/2010 4:51:00 PM	TAL
Acrolein	NELAP	50000		ND	µg/L	500	7/8/2010 4:51:00 PM	TAL
Acrylonitrile	NELAP	2500		ND	µg/L	500	7/8/2010 4:51:00 PM	TAL
Benzene	NELAP	1000		ND	µg/L	500	7/8/2010 4:51:00 PM	TAL
Bromodichloromethane	NELAP	2500		ND	µg/L	500	7/8/2010 4:51:00 PM	TAL
Bromoform	NELAP	2500		ND	µg/L	500	7/8/2010 4:51:00 PM	TAL
Bromomethane	NELAP	5000		ND	µg/L	500	7/8/2010 4:51:00 PM	TAL
Carbon tetrachloride	NELAP	2500		ND	µg/L	500	7/8/2010 4:51:00 PM	TAL
Chlorobenzene	NELAP	2500		ND	µg/L	500	7/8/2010 4:51:00 PM	TAL
Chloroethane	NELAP	5000		ND	µg/L	500	7/8/2010 4:51:00 PM	TAL
Chloroform	NELAP	2500		ND	µg/L	500	7/8/2010 4:51:00 PM	TAL
Chloromethane	NELAP	5000		ND	µg/L	500	7/8/2010 4:51:00 PM	TAL
cis-1,3-Dichloropropene	NELAP	2500		ND	µg/L	500	7/8/2010 4:51:00 PM	TAL
Dibromochloromethane	NELAP	2500		ND	µg/L	500	7/8/2010 4:51:00 PM	TAL
Ethylbenzene	NELAP	2500		ND	µg/L	500	7/8/2010 4:51:00 PM	TAL
Methylene chloride	NELAP	2500		ND	µg/L	500	7/8/2010 4:51:00 PM	TAL
Tetrachloroethene	NELAP	2500		ND	µg/L	500	7/8/2010 4:51:00 PM	TAL
Toluene	NELAP	1000		42400	µg/L	500	7/8/2010 4:51:00 PM	TAL

TEKLAB, INC.

5445 HORSESHOE LAKE ROAD
COLLINSVILLE, ILLINOIS 62234

ENVIRONMENTAL TESTING LABORATORY

TEL: 618-344-1004
FAX: 618-344-1005

LABORATORY RESULTS

Client: Mallinckrodt Inc.
WorkOrder: 10070122
Lab ID: 10070122-008
Report Date: 09-Jul-10

Client Project: MP602 Totes
Client Sample ID: MP602 #08
Collection Date: 7/2/2010 9:10:00 AM
Matrix: AQUEOUS

Analyses	Certification	RL	Qual	Result	Units	DF	Date Analyzed	Analyst
EPA 600 624, VOLATILE ORGANIC COMPOUNDS BY GC/MS								
trans-1,2-Dichloroethene	NELAP	2500		**ND**	µg/L	500	7/8/2010 4:51:00 PM	TAL
trans-1,3-Dichloropropene	NELAP	2500		**ND**	µg/L	500	7/8/2010 4:51:00 PM	TAL
Trichloroethene	NELAP	2500		**ND**	µg/L	500	7/8/2010 4:51:00 PM	TAL
Vinyl chloride	NELAP	1000		**ND**	µg/L	500	7/8/2010 4:51:00 PM	TAL
Xylenes, Total	NELAP	2500		**ND**	µg/L	500	7/8/2010 4:51:00 PM	TAL
Surr: 1,2-Dichloroethane-d4		74.7-129		**91.3**	%REC	500	7/8/2010 4:51:00 PM	TAL
Surr: 4-Bromofluorobenzene		86-119		**105.5**	%REC	500	7/8/2010 4:51:00 PM	TAL
Surr: Dibromofluoromethane		81.7-123		**94.1**	%REC	500	7/8/2010 4:51:00 PM	TAL
Surr: Toluene-d8		84.3-114		**95.5**	%REC	500	7/8/2010 4:51:00 PM	TAL
STANDARD METHODS 18TH ED. 2540 D								
Total Suspended Solids	NELAP	6		**10200**	mg/L	1	7/7/2010 9:00:00 AM	BSJ

Sample Narrative

EPA 600 4.1.4, 200.7R4.4, Metals by ICP (Total)

Elevated reporting limit due to high levels of target and/or non-target analytes.

EPA 600 624, Volatile Organic Compounds by GC/MS

Elevated reporting limit due to high levels of target and/or non-target analytes.

pH 6.0

TEKLAB, INC.

5445 HORSESHOE LAKE ROAD
COLLINSVILLE, ILLINOIS 62234

ENVIRONMENTAL TESTING LABORATORY

TEL: 618-344-1004
FAX: 618-344-1005

LABORATORY RESULTS

Client: Mallinckrodt Inc.
WorkOrder: 10070122
Lab ID: 10070122-009
Report Date: 09-Jul-10

Client Project: MP602 Totes
Client Sample ID: MP602 #09
Collection Date: 7/2/2010 9:20:00 AM
Matrix: AQUEOUS

Analyses	Certification	RL	Qual	Result	Units	DF	Date Analyzed	Analyst
EPA 600 4.1.4, 200.7R4.4, METALS BY ICP (TOTAL)								
Cadmium	NELAP	0.0200		< 0.0200	mg/L	10	7/8/2010 7:32:55 AM	LAL
Chromium	NELAP	0.100		< 0.100	mg/L	10	7/7/2010 12:51:39 AM	LAL
Copper	NELAP	0.100		< 0.100	mg/L	10	7/7/2010 12:51:39 AM	LAL
Iron	NELAP	0.200		1.42	mg/L	10	7/7/2010 12:51:39 AM	LAL
Lead	NELAP	0.400		< 0.400	mg/L	10	7/8/2010 7:32:55 AM	LAL
Nickel	NELAP	0.100	J	0.079	mg/L	10	7/7/2010 12:51:39 AM	LAL
Zinc	NELAP	0.100	J	0.024	mg/L	10	7/7/2010 12:51:39 AM	LAL
EPA 600 410.4								
Chemical Oxygen Demand	NELAP	20000		154000	mg/L	400	7/7/2010 10:00:00 AM	BSJ
EPA 600 624, VOLATILE ORGANIC COMPOUNDS BY GC/MS								
1,1,1-Trichloroethane	NELAP	500		ND	µg/L	100	7/6/2010 10:27:00 PM	CCF
1,1,2,2-Tetrachloroethane	NELAP	500		ND	µg/L	100	7/6/2010 10:27:00 PM	CCF
1,1,2-Trichloroethane	NELAP	500		ND	µg/L	100	7/6/2010 10:27:00 PM	CCF
1,1-Dichloroethane	NELAP	500		ND	µg/L	100	7/6/2010 10:27:00 PM	CCF
1,1-Dichloroethene	NELAP	500		ND	µg/L	100	7/6/2010 10:27:00 PM	CCF
1,2-Dichlorobenzene	NELAP	500		ND	µg/L	100	7/6/2010 10:27:00 PM	CCF
1,2-Dichloroethane	NELAP	500		ND	µg/L	100	7/6/2010 10:27:00 PM	CCF
1,2-Dichloropropane	NELAP	500		ND	µg/L	100	7/6/2010 10:27:00 PM	CCF
1,3-Dichlorobenzene	NELAP	500		ND	µg/L	100	7/6/2010 10:27:00 PM	CCF
1,4-Dichlorobenzene	NELAP	500		ND	µg/L	100	7/6/2010 10:27:00 PM	CCF
2-Chloroethyl vinyl ether	NELAP	2000		ND	µg/L	100	7/6/2010 10:27:00 PM	CCF
Acrolein	NELAP	10000		ND	µg/L	100	7/6/2010 10:27:00 PM	CCF
Acrylonitrile	NELAP	500		ND	µg/L	100	7/6/2010 10:27:00 PM	CCF
Benzene	NELAP	200		ND	µg/L	100	7/6/2010 10:27:00 PM	CCF
Bromodichloromethane	NELAP	500		ND	µg/L	100	7/6/2010 10:27:00 PM	CCF
Bromoform	NELAP	500		ND	µg/L	100	7/6/2010 10:27:00 PM	CCF
Bromomethane	NELAP	1000		ND	µg/L	100	7/6/2010 10:27:00 PM	CCF
Carbon tetrachloride	NELAP	500		ND	µg/L	100	7/6/2010 10:27:00 PM	CCF
Chlorobenzene	NELAP	500		ND	µg/L	100	7/6/2010 10:27:00 PM	CCF
Chloroethane	NELAP	1000		ND	µg/L	100	7/6/2010 10:27:00 PM	CCF
Chloroform	NELAP	500		ND	µg/L	100	7/6/2010 10:27:00 PM	CCF
Chloromethane	NELAP	1000		ND	µg/L	100	7/6/2010 10:27:00 PM	CCF
cis-1,3-Dichloropropene	NELAP	500		ND	µg/L	100	7/6/2010 10:27:00 PM	CCF
Dibromochloromethane	NELAP	500		ND	µg/L	100	7/6/2010 10:27:00 PM	CCF
Ethylbenzene	NELAP	500		ND	µg/L	100	7/6/2010 10:27:00 PM	CCF
Methylene chloride	NELAP	500		ND	µg/L	100	7/6/2010 10:27:00 PM	CCF
Tetrachloroethene	NELAP	500		ND	µg/L	100	7/6/2010 10:27:00 PM	CCF
Toluene	NELAP	200		ND	µg/L	100	7/6/2010 10:27:00 PM	CCF

TEKLAB, INC.

5445 HORSESHOE LAKE ROAD
COLLINSVILLE, ILLINOIS 62234

ENVIRONMENTAL TESTING LABORATORY

TEL: 618-344-1004
FAX: 618-344-1005

LABORATORY RESULTS

Client: Mallinckrodt Inc.
WorkOrder: 10070122
Lab ID: 10070122-009
Report Date: 09-Jul-10

Client Project: MP602 Totes
Client Sample ID: MP602 #09
Collection Date: 7/2/2010 9:20:00 AM
Matrix: AQUEOUS

Analyses	Certification	RL	Qual	Result	Units	DF	Date Analyzed	Analyst
EPA 600 624, VOLATILE ORGANIC COMPOUNDS BY GC/MS								
trans-1,2-Dichloroethene	NELAP	500		ND	µg/L	100	7/6/2010 10:27:00 PM	CCF
trans-1,3-Dichloropropene	NELAP	500		ND	µg/L	100	7/6/2010 10:27:00 PM	CCF
Trichloroethene	NELAP	500		ND	µg/L	100	7/6/2010 10:27:00 PM	CCF
Vinyl chloride	NELAP	200		ND	µg/L	100	7/6/2010 10:27:00 PM	CCF
Xylenes, Total	NELAP	500		ND	µg/L	100	7/6/2010 10:27:00 PM	CCF
Surr: 1,2-Dichloroethane-d4		74.7-129		118.6	%REC	100	7/6/2010 10:27:00 PM	CCF
Surr: 4-Bromofluorobenzene		86-119		110.0	%REC	100	7/6/2010 10:27:00 PM	CCF
Surr: Dibromofluoromethane		81.7-123		109.2	%REC	100	7/6/2010 10:27:00 PM	CCF
Surr: Toluene-d8		84.3-114		98.3	%REC	100	7/6/2010 10:27:00 PM	CCF
STANDARD METHODS 18TH ED. 2540 D								
Total Suspended Solids	NELAP	6		15300	mg/L	1	7/7/2010 9:00:00 AM	BSJ

Sample Narrative

EPA 600 4.1.4, 200.7R4.4, Metals by ICP (Total)

Elevated reporting limit due to high levels of target and/or non-target analytes.

EPA 600 624, Volatile Organic Compounds by GC/MS

Elevated reporting limit due to sample composition.

pH 6.5

TEKLAB, INC.

5445 HORSESHOE LAKE ROAD
COLLINSVILLE, ILLINOIS 62234

ENVIRONMENTAL TESTING LABORATORY

TEL: 618-344-1004
FAX: 618-344-1005

LABORATORY RESULTS

Client: Mallinckrodt Inc.
WorkOrder: 10070122
Lab ID: 10070122-010
Report Date: 09-Jul-10

Client Project: MP602 Totes
Client Sample ID: MP602 #10
Collection Date: 7/2/2010 9:15:00 AM
Matrix: AQUEOUS

Analyses	Certification	RL	Qual	Result	Units	DF	Date Analyzed	Analyst
EPA 600 4.1.4, 200.7R4.4, METALS BY ICP (TOTAL)								
Cadmium	NELAP	0.0200	S	< 0.0200	mg/L	10	7/8/2010 7:39:39 AM	LAL
Chromium	NELAP	0.100	J	0.083	mg/L	10	7/8/2010 7:39:39 AM	LAL
Copper	NELAP	0.100		< 0.100	mg/L	10	7/7/2010 12:58:25 AM	LAL
Iron	NELAP	0.200		1.14	mg/L	10	7/7/2010 12:58:25 AM	LAL
Lead	NELAP	0.400	S	< 0.400	mg/L	10	7/8/2010 7:39:39 AM	LAL
Nickel	NELAP	0.100	J	0.057	mg/L	10	7/7/2010 12:58:25 AM	LAL
Zinc	NELAP	0.100	J	0.036	mg/L	10	7/7/2010 12:58:25 AM	LAL
EPA 600 410.4								
Chemical Oxygen Demand	NELAP	25000	S	156000	mg/L	1	7/9/2010 12:00:00 PM	BSJ
EPA 600 624, VOLATILE ORGANIC COMPOUNDS BY GC/MS								
1,1,1-Trichloroethane	NELAP	500		ND	µg/L	100	7/6/2010 10:58:00 PM	CCF
1,1,2,2-Tetrachloroethane	NELAP	500		ND	µg/L	100	7/6/2010 10:58:00 PM	CCF
1,1,2-Trichloroethane	NELAP	500		ND	µg/L	100	7/6/2010 10:58:00 PM	CCF
1,1-Dichloroethane	NELAP	500		ND	µg/L	100	7/6/2010 10:58:00 PM	CCF
1,1-Dichloroethene	NELAP	500		ND	µg/L	100	7/6/2010 10:58:00 PM	CCF
1,2-Dichlorobenzene	NELAP	500		ND	µg/L	100	7/6/2010 10:58:00 PM	CCF
1,2-Dichloroethane	NELAP	500		ND	µg/L	100	7/6/2010 10:58:00 PM	CCF
1,2-Dichloropropane	NELAP	500		ND	µg/L	100	7/6/2010 10:58:00 PM	CCF
1,3-Dichlorobenzene	NELAP	500		ND	µg/L	100	7/6/2010 10:58:00 PM	CCF
1,4-Dichlorobenzene	NELAP	500		ND	µg/L	100	7/6/2010 10:58:00 PM	CCF
2-Chloroethyl vinyl ether	NELAP	2000		ND	µg/L	100	7/6/2010 10:58:00 PM	CCF
Acrolein	NELAP	10000		ND	µg/L	100	7/6/2010 10:58:00 PM	CCF
Acrylonitrile	NELAP	500		ND	µg/L	100	7/6/2010 10:58:00 PM	CCF
Benzene	NELAP	200		ND	µg/L	100	7/6/2010 10:58:00 PM	CCF
Bromodichloromethane	NELAP	500		ND	µg/L	100	7/6/2010 10:58:00 PM	CCF
Bromoform	NELAP	500		ND	µg/L	100	7/6/2010 10:58:00 PM	CCF
Bromomethane	NELAP	1000		ND	µg/L	100	7/6/2010 10:58:00 PM	CCF
Carbon tetrachloride	NELAP	500		ND	µg/L	100	7/6/2010 10:58:00 PM	CCF
Chlorobenzene	NELAP	500		ND	µg/L	100	7/6/2010 10:58:00 PM	CCF
Chloroethane	NELAP	1000		ND	µg/L	100	7/6/2010 10:58:00 PM	CCF
Chloroform	NELAP	500		ND	µg/L	100	7/6/2010 10:58:00 PM	CCF
Chloromethane	NELAP	1000		ND	µg/L	100	7/6/2010 10:58:00 PM	CCF
cis-1,3-Dichloropropene	NELAP	500		ND	µg/L	100	7/6/2010 10:58:00 PM	CCF
Dibromochloromethane	NELAP	500		ND	µg/L	100	7/6/2010 10:58:00 PM	CCF
Ethylbenzene	NELAP	500		ND	µg/L	100	7/6/2010 10:58:00 PM	CCF
Methylene chloride	NELAP	500		ND	µg/L	100	7/6/2010 10:58:00 PM	CCF
Tetrachloroethene	NELAP	500		ND	µg/L	100	7/6/2010 10:58:00 PM	CCF
Toluene	NELAP	200	J	150	µg/L	100	7/6/2010 10:58:00 PM	CCF

TEKLAB, INC.

5445 HORSESHOE LAKE ROAD
COLLINSVILLE, ILLINOIS 62234

ENVIRONMENTAL TESTING LABORATORY

TEL: 618-344-1004
FAX: 618-344-1005

LABORATORY RESULTS

Client: Mallinckrodt Inc.
WorkOrder: 10070122
Lab ID: 10070122-010
Report Date: 09-Jul-10

Client Project: MP602 Totes
Client Sample ID: MP602 #10
Collection Date: 7/2/2010 9:15:00 AM
Matrix: AQUEOUS

Analyses	Certification	RL	Qual	Result	Units	DF	Date Analyzed	Analyst
EPA 600 624, VOLATILE ORGANIC COMPOUNDS BY GC/MS								
trans-1,2-Dichloroethene	NELAP	500		**ND**	µg/L	100	7/6/2010 10:58:00 PM	CCF
trans-1,3-Dichloropropene	NELAP	500		**ND**	µg/L	100	7/6/2010 10:58:00 PM	CCF
Trichloroethene	NELAP	500		**ND**	µg/L	100	7/6/2010 10:58:00 PM	CCF
Vinyl chloride	NELAP	200		**ND**	µg/L	100	7/6/2010 10:58:00 PM	CCF
Xylenes, Total	NELAP	500		**ND**	µg/L	100	7/6/2010 10:58:00 PM	CCF
Surr: 1,2-Dichloroethane-d4		74.7-129		**118.5**	%REC	100	7/6/2010 10:58:00 PM	CCF
Surr: 4-Bromofluorobenzene		86-119		**108.2**	%REC	100	7/6/2010 10:58:00 PM	CCF
Surr: Dibromofluoromethane		81.7-123		**109.8**	%REC	100	7/6/2010 10:58:00 PM	CCF
Surr: Toluene-d8		84.3-114		**99.1**	%REC	100	7/6/2010 10:58:00 PM	CCF
STANDARD METHODS 18TH ED. 2540 D								
Total Suspended Solids	NELAP	6		**2860**	mg/L	1	7/7/2010 9:00:00 AM	BSJ

Sample Narrative

EPA 600 410.4

Matrix interference present in sample.

EPA 600 4.1.4, 200.7R4.4, Metals by ICP (Total)

Cd and Pb - Matrix spike recovery was outside QC limits due to sample dilution.
Elevated reporting limit due to high levels of target and/or non-target analytes.

EPA 600 624, Volatile Organic Compounds by GC/MS

Elevated reporting limit due to sample composition.

pH 6.5

VJW
SR

COVIDIEN

AUGUST 18, 2010

Mr. Doug Mendoza
Metropolitan St. Louis Sewer District
Department of Environmental Compliance
10 East Grand Avenue
St. Louis, MO 63147-2913

RE: Electrical outage - PERMIT NO. 2112059600-3

Dear Mr. Mendoza:

A plant-wide electrical outage for periodic maintenance has been scheduled for Saturday September 18 and Sunday September 19, 2010. As a result of the outage, the two lift stations at Sample Points 008 and 011 will lose power, causing the plant's wastewater to overflow through these sample points rather than to the plant-wide pH neutralization tanks and through our main outfall, Sample Point 010.

Per our permit conditions, a sample will be taken at the two sample points after overflow discharge commences, in addition to pH readings. There will be no processes in operation as a result of the power outage, and therefore reduced wastewater discharge is expected. This notification is in accordance with Ordinance 12559 and Permit #2112059600-3.

If you have any questions or need additional information, please call me at 314.654.3374.

Sincerely,

Lisa Meyer

Lisa Meyer
Senior HSE Engineer

RECEIVED
AUG 19 2010
DIVISION OF
ENVIRONMENTAL COMPLIANCE

COVIDIEN/MALLINCKRODT
3600 NORTH SECOND STREET
ST. LOUIS, MO 63147

TELEPHONE: 314-654-2000
FAX: 314-654-1251

V Jm
SR

COVIDIEN

August 16, 2010

Mr. Doug Mendoza
Manager, Environmental Compliance
St. Louis Metropolitan Sewer District
10 East Grand Ave
St. Louis, MO 63147

RE: Follow-up to the Unplanned Sodium Hydroxide Solution Release from Building 507 at the St. Louis Plant
PERMIT NO. 2112059600-3

Dear Mr. Mendoza:

This letter is a follow-up to an unplanned release of an estimated 900 gallons of a water based sodium hydroxide solution from Building 507 at the Mallinckrodt St. Louis Plant's as reported via voicemail message to you and phone call to the MSD Emergency line on August 10, 2010.

From approximately 1030 to 1110 on August 10, 2010, the release of an estimated 900 gallons of a 20% sodium hydroxide water based solution or 1501 pounds of sodium hydroxide occurred in Building 507. The cause of the release was a false low pH reading that is used to control pH from the Building 507 wastewater system which occurred while maintenance was being conducted on the probe. The discharge of the sodium hydroxide solution was discovered by the building control room at 1110 and the discharge to the plant sewer was stopped.

The release was treated at the plant's pH neutralization system and at no time did the discharge through the plant's main outfall, SP010 exceed MSD pH permitted limits.

An internal investigation is currently being conducted and procedures for performing the pH probe maintenance are being evaluated.

If you have any questions or need additional information, please call me at 314.654.3374.

Sincerely,

Lisa Meyer
Senior HSE Engineer

RECEIVED
AUG 17 2010
DIVISION OF
ENVIRONMENTAL COMPLIANCE

COVIDIEN/MALLINCKRODT
3600 NORTH SECOND STREET
ST. LOUIS, MO 63147

TELEPHONE: 314-654-2000
FAX: 314-654-1251

PIMS - Pretreatment Information Management System [PIMS St. Louis (PIMS)]

File Edit Records Worklists Reports/Letters Tools Window Help

General Info | Sample Points | Metering | Monitoring | Permits | Results | Compliance | Enforcement | Water Use | Spec Dischrg

Facility ID: 2112059600 Name: MALLINCKRODT INC [2112059600]

Results

Start Date: 01/01/2009 End Date: Apply

Events | Inspections | Sampling | Limit Comp | Violations | SMDE | Gen Rpts | **Notifications** | Surcharge | Surcharge Export

Notification Type	Date
Self-Mon Discharge Viol - 1 Day Notice	09/03/2009
Problem Discharge - Immediate Notice	08/10/2009
Problem Discharge - 5 Day Written Follow Up	04/27/2009
Problem Discharge - 5 Day Written Follow Up	04/21/2009
Self-Mon Discharge Viol - 1 Day Notice	04/21/2009
Problem Discharge - Immediate Notice	04/14/2009
Problem Discharge - 5 Day Written Follow Up	04/07/2009
Problem Discharge - Immediate Notice	03/31/2009
Self-Mon Discharge Viol - 30 Day Written Follo	02/19/2009
Self-Mon Discharge Viol - 1 Day Notice	02/14/2009
Problem Discharge - 5 Day Written Follow Up	01/29/2009
Problem Discharge - Immediate Notice	01/26/2009
Problem Discharge - 5 Day Written Follow Up	01/02/2009
Problem Discharge - Immediate Notice	08/10/2010

Text

Lisa Meyer called and left a message telling Doug Mendoza that Mallinckrodt had a spill of 800 gallons of 20% sodium hydroxide.

TO: Chris Verplancke, Finance Department

FROM: Steven M. Grace, DEC SMG

DATE: August 6, 2010

RE: **Wastewater User Charge Billing for Special Discharge**

Please bill, by invoice, the following charges applicable to an on-site special discharge approved in our letter dated October 30, 1998, as modified in letters dated November 20, 1998, July 19, 1999, March 28, 2001, October 13, 2004, June 19, 2006, and May 22, 2008. The discharge dates and quantity are from information submitted by Sharon Cotner, Corps of Engineers, in a letter dated July 27, 2010.

This charge is based on the rates in MSD Wastewater User Charge Ordinance 13021. Please note that, as of July 1, 2010, the volume charge of $2.02 per 100 cubic feet of wastewater became effective.

PARTY TO BILL: Larry Joellenbeck
The Shaw Group Inc.
1 Angelrodt Street
St. Louis, MO 63147

BILLING IS FOR: On-Site Special Discharge

DISCHARGE PERIOD: April through June 2010

SOURCE OF WASTE: Treated construction water from the St. Louis Downtown FUSRAP Site located at Mallinckrodt, Inc., 3600 N. Second Street, St. Louis, Missouri.

Discharge Period	Billing Item	Quantity	Units	Rate	Charge
4/7/10 - 6/30/10	Volume	398	CcF	$1.92	$764.16
Totals:	---	398	CcF	---	$764.16

If you have any questions, please call me on extension 8755.

ldl

pc: Doug Mendoza

File: IU, MALLINCKRODT INC [2112059600]

SR
8-3

COVIDIEN

July 20, 2010

Mr. Doug Mendoza
Metropolitan St. Louis Sewer District
Department of Environmental Compliance
10 East Grand Avenue
St. Louis, MO 63147

Re: 2010 2nd Quarter Self-Monitoring Report for Permit No. 21120596-2.1

Dear Mr. Mendoza,

Please find enclosed the 2010 2nd Quarter Self Monitoring report for Mallinckrodt Inc.

The following sample points received no pharmaceutical process water flow during the fourth quarter: SP008, SP011, SP918, SP932, SP933 and SP935.

In response to the Notice of Violation dated May 10, 2010 the following additional information is also included in the 2nd Quarter Self Monitoring report:

1. Submit additional sampling results to MSD. Sample collection must occur as follows:
    a. Collect grab samples for the full list of organics at SP905 (therefore, two sets are required for the second quarter)
        i. **Attached in this report are samples from 04/15/10 and 05/13/10.**
    b. Collect grab samples for diethyl amine and triethyl amine at SP915 (these are once per year requirements; a violation can be avoided if results are acceptable).
        i. **SP915 was sampled for these two parameters on 05/08/10 with acceptable results as indicated in the report.**

If you have any questions or require more detailed information, please contact me at 314.654.3374.

Sincerely,

Lisa Meyer
Senior HSE Engineer

RECEIVED
JUL 22 2010
DIVISION OF
ENVIRONMENTAL COMPLIANCE

ENCLOSURES

COVIDIEN/MALLINCKRODT
3600 NORTH SECOND STREET
ST. LOUIS, MO 63147

TELEPHONE: 314-654-2000
FAX: 314-654-1251

METROPOLITAN ST. LOUIS SEWER DISTRICT
INDUSTRIAL USER RADIOACTIVE MATERIALS DISCHARGE REPORT

PART I: IDENTIFYING INFORMATION

Company Name: Mallinckrodt - Covidien

Permit No: 21120596-3

Premise Address: 3600 N Second St. St. Louis, MO 63147

Reporting Period: ☐(JAN-MAR) ☒(APR-JUNE) ☐(JULY-SEPT) ☐(OCT-DEC)

PART II: RECORD OF DISPOSAL OF RADIOACTIVE MATERIALS TO THE SEWER SYSTEM

RADIONUCLIDE	ACTIVITY DISCHARGED (millicuries)
TOTAL ACTIVITY DISCHARGED:	0

PART III: CERTIFICATION STATEMENTS

Place your initials in the box under item A.
Everyone must complete the information under items A & B and sign this report.

A. CERTIFICATION OF COMPLIANCE WITH STATE AND FEDERAL REGULATIONS

[RLP] I certify that to the best of my knowledge & belief, all requirements of 10 CFR Part [illegible].2083 and 19 CSR Part 20-10.090 governing disposal by release into sanitary sewage for material regulated by the Nuclear Regulatory Commission and the Missouri Department of Health, respectively, have been met for the period covered by this report.

B. RADIOACTIVE MATERIALS DISCHARGE REPORT CERTIFICATION

I certify under penalty of Law that this document and all attachments were prepared under my direction or supervision in accordance with a system designed to assure that qualified personnel properly gather and evaluate the information submitted. Based on my inquiry of the person or persons who manage the system, or those persons directly responsible for gathering the information, the information submitted is, to the best of my knowledge and belief, true, accurate, and complete. I am aware that there are significant penalties for submitting false information, including the possibility of fine and imprisonment for knowing violations.

RECEIVED JUL 22 2010 DIVISION OF ENVIRONMENTAL COMPLIANCE

RECEIVED JUL 22 2010 DIVISION OF ENVIRONMENTAL COMPLIANCE

Print/type name of signing official: Richard C. Proehl

Title: Site Director Telephone: 314-654-5816

Signature: Richard C. Proehl Date: 07/20/10

radrpt.doc 2/00

PART III: SPECIAL CERTIFICATION STATEMENTS

Based on the special conditions contained in your discharge permit you may be required to certify the following.
Please review your permit and **PLACE YOUR INITIALS ON THE LINES NEXT TO THE CERTIFICATIONS.**

A — NO CHANGE IN WASTEWATER DISCHARGE AT SAMPLE POINTS WITH NO MONITORING REQUIRED

For permit special conditions that waive monitoring at any sample point(s) specified in your permit, you are required to make the following certification for each report in which monitoring is waived:

RCP I certify, since the last discharge monitoring report, there has been no change in the character of the wastes discharged at sample points 001 and 002.

RCP I certify, since the last discharge monitoring report, there has been no discharge from sample points 008 and 011.

B — NO CHANGE IN WASTEWATER DISCHARGE AT ACTIVE CONNECTIONS WITHOUT SAMPLE POINTS

For permit special conditions that waive monitoring at active connection points which are not specified as sample points in your permit, you are required to make the following certification:

RCP I certify, since the last discharge monitoring report, there has been no change in the character of wastes discharged at those active connection points which are not specified in my permit.

E — NO DISCHARGE OF CATEGORICAL WASTE

For permit special conditions that prohibit discharge of wastes which are subject to certain categorical pretreatment standards, you are required to make the following certification:

RCP I certify, since the last discharge monitoring report, there has been no discharge of wastes which are subject to pretreatment standards in 40 CFR 414 (except for those wastes conveyed by SP 905).

F — CYANIDE NOT USED OR GENERATED IN 40 CFR 439 OPERATIONS

Discharges subject to Pharmaceutical Categorical Standards (40 CFR 439) can be exempted from limitations and monitoring for Total Cyanide at the Pharmaceutical sample points 080, 915, 920, 935, 936, and 937, subject to the following certification:

RCP I certify, since the last discharge monitoring report, cyanide has not been used or generated in any pharmaceutical manufacturing process subject to Categorical Standards in 40 CFR 439.

H — PHARMACEUTICAL POLLUTANTS NOT USED OR GENERATED IN 40 CFR 439 OPERATIONS

Discharges subject to Pharmaceutical Categorical Standards (40 CFR 439) can be exempted from monitoring for certain 40 CFR 439-regulated pollutants at the Pharmaceutical sample points 915, 935, and 936, subject to the following certification:

RCP I certify, since the last discharge monitoring report, the 40 CFR 439-regulated pollutants, as determined in permittee's report dated April 5, 2010, have not been used or generated in any pharmaceutical manufacturing process subject to Categorical Standards in 40 CFR 439. In addition, the above-referenced report remains valid.

I — SURROGATE MONITORING ALLOWED FOR 40 CFR 439 OPERATIONS

Discharges subject to Pharmaceutical Categorical Standards (40 CFR 439) can be exempted from monitoring for certain 40 CFR 439-regulated pollutants, and replaced by monitoring for surrogate pollutant(s), at the Pharmaceutical sample points 920 and 937 subject to the following certification:

RCP I certify, since the last discharge monitoring report, the 40 CFR 439-regulated pollutants, as determined in permittee's report dated April 5, 2010, continue to receive the same degree of treatment as the surrogate pollutant(s). In addition, the above-referenced report remains valid.

PART IV: GENERAL CERTIFICATION STATEMENTS

B — DISCHARGE MONITORING REPORT CERTIFICATION

All permittees must sign and complete the information below:

I certify under penalty of Law that this document and all attachments were prepared under my direction or supervision in accordance with a system designed to assure that qualified personnel properly gather and evaluate the information submitted. Based on my inquiry of the person or persons who manage the system, or those persons directly responsible for gathering the information, the information submitted is, to the best of my knowledge and belief, true, accurate, and complete. I am aware that there are significant penalties for submitting false information, including the possibility of fine and imprisonment for knowing violations.

Print or type name of signing official: Richard C. Proehl

Title: Site Director Telephone: 314.654.5816

Signature: Richard C Proehl Date: 07/20/10

RECEIVED
JUL 22 2010
DIVISION OF
ENVIRONMENTAL COMPLIANCE

METROPOLITAN ST. LOUIS SEWER DISTRICT
2010 INDUSTRIAL USER SELF MONITORING REPORT

PLEASE READ THE INSTRUCTIONS BEFORE COMPLETING THIS REPORT

PART I: IDENTIFYING INFORMATION

Company Name: Mallinckrodt Inc.

Permit No.: 2112059600 - 2.1

Premise Address: 3600 North Second St., St. Louis, MO 63147

Monitoring Period: _____(JAN-MAR) __X__(APR-JUNE) ____(JULY-SEPT) _____(OCT-DEC)

Samples Collected By: Mallinckrodt Inc

Analysis Performed By: _____

Part II: ANALYTICAL RESULTS OF SELF MONITORING

MSD SAMPLE POINT REFERENCE NUMBERS	----->		001					
DATES ON WHICH SAMPLES WERE COLLECTED	----->		NA					
TIMES AT WHICH SAMPLES WERE COLLECTED	----->							
PARAMETER	LIMIT	RECORD SAMPLE TYPES (G,C,M OR E) & RESULTS BELOW G=grab,C=composite,M=measured flow,E=estimated flow						UNITS
FLOW		E	1,000					gal/day
NO MONITORING REQUIRED (Sanitary Only)								
There have been no change in the character of the wastes discharged since the last report.								

RECEIVED
JUL 22 2010
DIVISION OF
ENVIRONMENTAL COMPLIANCE

METROPOLITAN ST. LOUIS SEWER DISTRICT
2010 INDUSTRIAL USER SELF MONITORING REPORT

PLEASE READ THE INSTRUCTIONS BEFORE COMPLETING THIS REPORT

PART I: IDENTIFYING INFORMATION

Company Name: Mallinckrodt Inc.

Permit No.: 2112059600 - 2.1

Premise Address: 3600 North Second St., St. Louis, MO 63147

Monitoring Period: _____(JAN-MAR) __X__(APR-JUNE) ____(JULY-SEPT) ____(OCT-DEC)

Samples Collected By: Mallinckrodt Inc

Analysis Performed By: _____

Part II: ANALYTICAL RESULTS OF SELF MONITORING

MSD SAMPLE POINT REFERENCE NUMBERS	---->		002					
DATES ON WHICH SAMPLES WERE COLLECTED	---->		NA					
TIMES AT WHICH SAMPLES WERE COLLECTED	---->							
PARAMETER	LIMIT	RECORD SAMPLE TYPES (G,C,M OR E) & RESULTS BELOW G=grab,C=composite,M=measured flow,E=estimated flow						UNITS
FLOW		E	2,200					gal/day
NO MONITORING REQUIRED (Sanitary Only)								
There have been no change in the character of the wastes discharged since the last report.								

RECEIVED
JUL 22 2010
DIVISION OF
ENVIRONMENTAL COMPLIANCE

METROPOLITAN ST. LOUIS SEWER DISTRICT
2010 INDUSTRIAL USER SELF MONITORING REPORT

PLEASE READ THE INSTRUCTIONS BEFORE COMPLETING THIS REPORT

PART I: IDENTIFYING INFORMATION

Company Name: Mallinckrodt Inc.

Permit No.: 2112059600 - 2.1

Premise Address: 3600 North Second St., St. Louis, MO 63147

Monitoring Period: ____(JAN-MAR) __X__(APR-JUNE) ____(JULY-SEPT) _____(OCT-DEC)

Samples Collected By: Mallinckrodt

Analysis Performed By: TEKLAB

Part II: ANALYTICAL RESULTS OF SELF MONITORING

MSD SAMPLE POINT REFERENCE NUMBERS	----->	003		009		099		
DATES ON WHICH SAMPLES WERE COLLECTED	----->	4/15/2010		4/15/2010		calculated		
TIMES AT WHICH SAMPLES WERE COLLECTED	----->	0650, 0810, 0910, 1010		0740, 0840, 940, 10:50		n/a		
PARAMETER	LIMIT	RECORD SAMPLE TYPES (G,C,M OR E) & RESULTS BELOW G=grab,C=composite,M=measured flow,E=estimated flow						UNITS
FLOW		M	13,046	M	6,480	E	6,566	gal/day
Oil & Grease	200	G	17	G	18	E	16	mg/l
Biochemical Oxygen Demand	****	C	30	C	48	E	12	mg/l
Chemical Oxygen Demand	****	C	156	C	116	E	195	mg/l
Total Suspended Solids	****	C	46	C	75	E	17	mg/l
Temperature	60	G	27	G	16	E	22	deg C
pH	5.5 - 11.5	G	7.0	G	6.5	E	6.5	S.U.
Lab Dilution Factor			1		1			

RECEIVED
JUL 22 2010
DIVISION OF
ENVIRONMENTAL COMPLIANCE

METROPOLITAN ST. LOUIS SEWER DISTRICT
2010 INDUSTRIAL USER SELF MONITORING REPORT

PLEASE READ THE INSTRUCTIONS BEFORE COMPLETING THIS REPORT

PART I: IDENTIFYING INFORMATION

Company Name: Mallinckrodt Inc.

Permit No.: 2112059600 - 2.1

Premise Address: 3600 North Second St., St. Louis, MO 63147

Monitoring Period: _____(JAN-MAR) __X__(APR-JUNE) ____(JULY-SEPT) ____(OCT-DEC)

Samples Collected By: Mallinckrodt

Analysis Performed By: TEKLAB

Part II: ANALYTICAL RESULTS OF SELF MONITORING

MSD SAMPLE POINT REFERENCE NUMBERS	---->		005					
DATES ON WHICH SAMPLES WERE COLLECTED	---->		4/15/2010					
TIMES AT WHICH SAMPLES WERE COLLECTED	---->		0715, 0820, 0920, 1025					
PARAMETER	LIMIT	RECORD SAMPLE TYPES (G,C,M OR E) & RESULTS BELOW G=grab,C=composite,M=measured flow,E=estimated flow						UNITS
FLOW		E	32,000					gal/day
Oil & Grease	200	G	5					mg/l
Biochemical Oxygen Demand	****	C	7					mg/l
Chemical Oxygen Demand	****	C	<50					mg/l
Total Suspended Solids	****	C	<6					mg/l
Temperature	60	G	28					deg C
pH	5.5 - 11.5	G	9.0					S.U.
Lab Dilution Factor			1					

RECEIVED

JUL 22 2010

DIVISION OF
ENVIRONMENTAL COMPLIANCE

METROPOLITAN ST. LOUIS SEWER DISTRICT
2010 INDUSTRIAL USER SELF MONITORING REPORT

PLEASE READ THE INSTRUCTIONS BEFORE COMPLETING THIS REPORT

PART I: IDENTIFYING INFORMATION

Company Name: Mallinckrodt Inc.

Permit No.: 2112059600 - 2.1

Premise Address: 3600 North Second St., St. Louis, MO 63147

Monitoring Period: ____(JAN-MAR) __X__(APR-JUNE) ____(JULY-SEPT) ____(OCT-DEC)

Samples Collected By: Mallinckrodt

Analysis Performed By: TEKLAB

Part II: ANALYTICAL RESULTS OF SELF MONITORING

MSD SAMPLE POINT REFERENCE NUMBERS	----->		008					
DATES ON WHICH SAMPLES WERE COLLECTED	----->							
TIMES AT WHICH SAMPLES WERE COLLECTED	----->							
PARAMETER	LIMIT	RECORD SAMPLE TYPES (G,C,M OR E) & RESULTS BELOW G=grab,C=composite,M=measured flow,E=estimated flow						UNITS
FLOW		E	*					gal/day
Oil & Grease	200	G						mg/l
Biochemical Oxygen Demand	****	G						mg/l
Chemical Oxygen Demand	****	G						mg/l
Temperature	60	G						deg C
Total Suspended Solids	****	G						mg/L
pH	5.5 - 11.5	G						S.U.
* No flow from this outfall during this reporting period.								
Lab Dilution Factor								

RECEIVED
JUL 22 2010
DIVISION OF
ENVIRONMENTAL COMPLIANCE

METROPOLITAN ST. LOUIS SEWER DISTRICT
2010 INDUSTRIAL USER SELF MONITORING REPORT

PLEASE READ THE INSTRUCTIONS BEFORE COMPLETING THIS REPORT

PART I: IDENTIFYING INFORMATION

Company Name: Mallinckrodt Inc.

Permit No.: 2112059600 -2.1

Premise Address: 3600 North Second St., St. Louis, MO 63147

Monitoring Period: ____(JAN-MAR) __X__(APR-JUNE) ____(JULY-SEPT) _____(OCT-DEC)

Samples Collected By: Mallinckrodt

Analysis Performed By: TEKLAB

Part II: ANALYTICAL RESULTS OF SELF MONITORING

MSD SAMPLE POINT REFERENCE NUMBERS	----->		010						
DATES ON WHICH SAMPLES WERE COLLECTED	----->		4/15/2010						
TIMES AT WHICH SAMPLES WERE COLLECTED	----->		0750, 0850, 0950, 1105						
PARAMETER	LIMIT	RECORD SAMPLE TYPES (G,C,M OR E) & RESULTS BELOW G=grab,C=composite,M=measured flow,E=estimated flow							UNITS
FLOW		E	1,860,482						gal/day
Oil & Grease	200	G	6						mg/l
Biochemical Oxygen Demand	****	C	384						mg/l
Chemical Oxygen Demand	****	C	527						mg/l
Total Suspended Solids	****	C	102						mg/l
Temperature	60	G	31						deg C
pH	5.5 - 11.5	G	see attached						S.U.
Chromium	5	C	0.005						mg/l
Copper	2.7	C	0.006						mg/l
Nickel	2.3	C	0.015						mg/l
Zinc	3	C	0.021						mg/l
Lab Dilution Factor			1						

RECEIVED
JUL 22 2010
DIVISION OF
ENVIRONMENTAL COMPLIANCE

Mallinckrodt pH Monitoring for SP010: April, 2010

Date / Time	pH	Total for Event in Minutes
08-Apr-10 10:35:00	5.4	5
17-Apr-10 11:15:00	**5.5**	
17-Apr-10 11:20:00	**4.6**	
17-Apr-10 11:25:00	**12**	**15**
17-Apr-10 11:30:00	11.8	5
20-Apr-10 15:30:00	**5.4**	**5**
29-Apr-10 10:25:00	3.8	5
	April Total	**35**

Mallinckrodt pH Monitoring for SP010: May, 2010

Date / Time	pH	Total for Event in Minutes
13-May-10 08:40:00	4.0	5
19-May-10 10:20:00	**3.9**	**5**
27-May-10 09:40:00	5.2	5
	May Total:	**15**

Mallinckrodt pH Monitoring for SP010: June, 2010

Date / Time	pH	Total for Event in Minutes
01-Jun-10 17:05:00	4.8	
01-Jun-10 17:10:00	3.5	
01-Jun-10 17:15:00	4.5	15
14-Jun-10 04:55:00	**5.3**	**5**
16-Jun-10 19:10:00	5.1	
16-Jun-10 19:15:00	5.3	10
25-Jun-10 08:20:00	**5.2**	**5**
	June Total:	**35**

RECEIVED
JUL 22 2010
DIVISION OF
ENVIRONMENTAL COMPLIANCE

METROPOLITAN ST. LOUIS SEWER DISTRICT
2010 INDUSTRIAL USER SELF MONITORING REPORT

PLEASE READ THE INSTRUCTIONS BEFORE COMPLETING THIS REPORT

PART I: IDENTIFYING INFORMATION

Company Name: Mallinckrodt Inc.

Permit No.: 2112059600 - 2.1

Premise Address: 3600 North Second St., St. Louis, MO 63147

Monitoring Period: ___(JAN-MAR) __X__(APR-JUNE) ____(JULY-SEPT) ____(OCT-DEC)

Samples Collected By: Mallinckrodt

Analysis Performed By: TEKLAB

Part II: ANALYTICAL RESULTS OF SELF MONITORING

MSD SAMPLE POINT REFERENCE NUMBERS	----->		011					
DATES ON WHICH SAMPLES WERE COLLECTED	---->							
TIMES AT WHICH SAMPLES WERE COLLECTED	---->							
PARAMETER	LIMIT	RECORD SAMPLE TYPES (G,C,M OR E) & RESULTS BELOW G=grab,C=composite,M=measured flow,E=estimated flow						UNITS
FLOW		E	*					gal/day
Oil & Grease	200	G						mg/l
Biochemical Oxygen Demand	****	G						mg/l
Chemical Oxygen Demand	****	G						mg/l
Total Suspended Solids	****	G						mg/l
Temperature	60	G						deg C
pH	5.5 - 11.5	G						S.U.
* No flow from this outfall during this reporting period.								
Lab Dilution Factor								

RECEIVED
JUL 22 2010
DIVISION OF
ENVIRONMENTAL COMPLIANCE

METROPOLITAN ST. LOUIS SEWER DISTRICT
2010 INDUSTRIAL USER SELF MONITORING REPORT

PLEASE READ THE INSTRUCTIONS BEFORE COMPLETING THIS REPORT

PART I: IDENTIFYING INFORMATION

Company Name: Mallinckrodt Inc.
Permit No.: 2112059600 - 2.1
Premise Address: 3600 North Second St., St. Louis, MO 63147
Monitoring Period: _____(JAN-MAR) __X__(APR-JUN) ____(JULY-SEP) _____(OCT-DEC)
Samples Collected By: Mallinckrodt Inc
Analysis Performed By: TEKLAB

Part II: ANALYTICAL RESULTS OF SELF MONITORING

MSD SAMPLE POINT REFERENCE NUMBERS			---->		**080**				
DATES ON WHICH SAMPLES WERE COLLECTED			---->		4/6/2010				
TIMES AT WHICH SAMPLES WERE COLLECTED			---->		1120, 1220, 1320, 1420				
PARAMETER	EPA METHOD	DAILY MAX	AVG MONTHLY	**RECORD SAMPLE TYPES (G, C, M OR E) & RESULTS BELOW** G=Grab, C-composite, M=measured flow, E=estimated flow					UNITS
FLOW				E	3,500				gal/day
Acetone	524.2	20.70	8.20	G	<1.000				mg/L
n-Amyl Acetate	1666	20.70	8.20	G	<0.100				mg/L
Benzene	524.2	3.00	0.70	G	0.221				mg/L
n-Butyl acetate	1666	20.70	8.20	G	<0.100				mg/L
Chlorobenzene	524.2	3.00	0.70	G	<0.100				mg/L
Chloroform	524.2	0.10	0.03	G	<0.020				mg/L
1,2-Dichlorobenzene	524.2	20.70	8.20	G	<0.100				mg/L
1,2-Dichloroethane	524.2	20.70	8.20	G	<0.100				mg/L
Diethyl amine	1671	255.00	100.00	G	<50				mg/L
Ethyl Acetate	1666	20.70	8.20	G	<0.200				mg/L
n-Heptane	1666	3.00	0.70	G	<0.200				mg/L
n-Hexane	1666	3.00	0.70	G	<0.200				mg/L
Isobutyraldehyde	1666	20.70	8.20	G	<0.200				mg/L
Isopropyl acetate	1666	20.70	8.20	G	<0.100				mg/L
Isopropyl ether	1666	20.70	8.20	G	<0.100				mg/L
Methylene chloride	524.2	3.00	0.70	G	<0.100				mg/L
Methyl formate	1666	20.70	8.20	G	<1.000				mg/L
4-Methyl-2-pentanone	1666	20.70	8.20	G	<0.200				mg/L
Tetrahydrofuran	1666	9.20	3.40	G	<0.400				mg/L
Toluene	524.2	0.30	0.20	G	<0.100				mg/L
Triethyl amine	1671	255.00	100.00	G	<20				mg/L
Xylenes	1666	3.00	0.70	G	<0.100				mg/L
Oil & Grease	1664	200		G	<6				mg/L
Biochemical Oxygen Demand		****		C	<5				mg/L
Chemical Oxygen Demand		****		C	<50				mg/L
Total Suspended Solids		****		C	39				mg/L
Temperature		60		G	13.7				deg C
pH		5.5 - 11.5		G	10.0				S.U.
Dilution by lab					1, 20				

RECEIVED
JUL 22 2010
DIVISION OF
ENVIRONMENTAL COMPLIANCE

METROPOLITAN ST. LOUIS SEWER DISTRICT
2010 INDUSTRIAL USER SELF MONITORING REPORT

PLEASE READ THE INSTRUCTIONS BEFORE COMPLETING THIS REPORT

PART I: IDENTIFYING INFORMATION

Company Name: Mallinckrodt Inc.

Permit No.: 2112059600 - 2.1

Premise Address: 3600 North Second St., St. Louis, MO 63147

Monitoring Period: ____(JAN-MAR) _X___(APR-JUNE) ____ (JULY-SEPT) ___(OCT-DEC)

Samples Collected By: Mallinckrodt

Analysis Performed By: TEKLAB

Part II: ANALYTICAL RESULTS OF SELF MONITORING

MSD SAMPLE POINT REFERENCE NUMBERS ----->			080					
DATES ON WHICH SAMPLES WERE COLLECTED ----->			4/20/2010					
TIMES AT WHICH SAMPLES WERE COLLECTED ----->			10:30					
PARAMETER	LIMIT	RECORD SAMPLE TYPES (G,C,M OR E) & RESULTS BELOW G=grab,C=composite,M=measured flow,E=es						UNITS
FLOW		E	3,500					gal/day
1,1,1-Trichloroethane		G	<0.005					mg/l
1,1,2,2-Tetrachloroethane		G	<0.005					mg/l
1,1,2-Trichloroethane		G	<0.005					mg/l
1,1-Dichloroethane		G	<0.005					mg/l
1,1-Dichloroethene		G	<0.005					mg/l
1,2-Dichlorobenzene		G	<0.005					mg/l
1,2-Dichloroethane		G	<0.005					mg/l
1,2-Dichloropropane		G	<0.005					mg/l
1,3-Dichlorobenzene		G	<0.005					mg/l
1,4-Dichlorobenzene		G	<0.005					mg/l
2-Chloroethylvinylether		G	<0.020					mg/l
Acrolein		G	<0.100					mg/l
Acrylonitrile		G	<0.005					mg/l
Benzene		G	0.0162					mg/l
Bromodichloromethane		G	0.0021					mg/l
Bromoform		G	<0.005					mg/l
Bromomethane		G	<0.010					mg/l
Carbon Tetrachloride		G	<0.005					mg/l
Chlorobenzene		G	<0.005					mg/l
Chloroethane		G	<0.010					mg/l
Chloroform		G	0.0122					mg/l
Chloromethane		G	<0.010					mg/l
cis-1,3-Dicholropropene		G	<0.005					mg/l
Dibromochloromethane		G	<0.005					mg/l
Ethylbenzene		G	<0.005					mg/l
Methylene Chloride		G	<0.005					mg/l
Tetrachloroethene		G	<0.005					mg/l
Toluene		G	<0.002					mg/l
trans-1,2-Dichloroethene		G	<0.005					mg/l
trans-1,3-Dichloropropene		G	<0.005					mg/l
Trichloroethene		G	<0.005					mg/l
Vinyl Chloride		G	<0.002					mg/l
1,2,4-Trichlorobenzene		G	<0.1					mg/l
2,4,6-Trichlorophenol		G	<0.087					mg/l
2,4-Dichlorophenol		G	<0.087					mg/l
2,4-Dimethylphenol		G	<0.087					mg/l
2,4-Dinitrophenol		G	<0.175					mg/l
2,4-Dinitrotoluene		G	<0.087					mg/l
2,6-Dinitrotoluene		G	<0.087					mg/l
2-Chloronapthalene		G	<0.087					mg/l
2-Chlorophenol		G	<0.087					mg/l
2-Nitrophenol		G	<0.175					mg/l
3,3-Dichlorobenzidine		G	<0.087					mg/l
2-Methyl-4,6-dinitrophenol		G	<0.175					mg/l
4-Bromophenyl-phenylether		G	<0.087					mg/l

RECEIVED
JUL 22 2010
DIVISION OF
ENVIRONMENTAL COMPLIANCE

METROPOLITAN ST. LOUIS SEWER DISTRICT
2010 INDUSTRIAL USER SELF MONITORING REPORT

PLEASE READ THE INSTRUCTIONS BEFORE COMPLETING THIS REPORT

PART I: IDENTIFYING INFORMATION

Company Name: Mallinckrodt Inc.

Permit No.: 2112059600 - 2.1

Premise Address: 3600 North Second St., St. Louis, MO 63147

Monitoring Period: ____(JAN-MAR) _X___(APR-JUNE) ____ (JULY-SEPT) ___(OCT-DEC)

Samples Collected By: Mallinckrodt

Analysis Performed By: TEKLAB

Part II: ANALYTICAL RESULTS OF SELF MONITORING

MSD SAMPLE POINT REFERENCE NUMBERS	---->		**080**					
DATES ON WHICH SAMPLES WERE COLLECTED	---->		4/20/2010					
TIMES AT WHICH SAMPLES WERE COLLECTED	---->		10:30					
PARAMETER	LIMIT	**RECORD SAMPLE TYPES (G,C,M OR E) & RESULTS BELOW** G=grab,C=composite,M=measured flow,E=es						UNITS
FLOW		E	3,500					gal/day
4-Chloro-3-methylphenol		G	<0.175					mg/l
4-Chlorophenyl-phenylether		G	<0.087					mg/l
4-Nitrophenol		G	<0.175					mg/l
Acenapthene		G	<0.087					mg/l
Acenaphthylene		G	<0.087					mg/l
Anthracene		G	<0.087					mg/l
Benzidine		G	<0.087					mg/l
Benzo(a)anthracene		G	<0.087					mg/l
Benzo(a)pyrene		G	<0.087					mg/l
Benzo(b)fluoranthene		G	<0.087					mg/l
Benzo(g,h,i)perylene		G	<0.087					mg/l
Benzo(k)fluoranthene		G	<0.087					mg/l
Bis(2-chloroethoxy)methane		G	<0.087					mg/l
Bis(2-chloroethyl)ether		G	<0.087					mg/l
Bis(2-chloroisopropyl)ether		G	<0.087					mg/l
Bis(2-ethylhexyl)phthalate		G	<0.052					mg/l
Butyl benzyl phthalate		G	<0.087					mg/l
Chrysene		G	<0.087					mg/l
Dibenzo(a,h)anthracene		G	<0.087					mg/l
Diethyl phthalate		G	<0.087					mg/l
Dimethyl phthalate		G	<0.087					mg/l
Di-n-butyl phthalate		G	<0.087					mg/l
Di-n-octyl-phthalate		G	<0.087					mg/l
Fluoranthene		G	<0.087					mg/l
Fluorene		G	<0.087					mg/l
Hexachlorobenzene		G	<0.087					mg/l
Hexachlorobutadiene		G	<0.087					mg/l
Hexachlorocyclopentadiene		G	<0.175					mg/l
Hexachloroethane		G	<0.087					mg/l
Ideno(1,2,3-cd)pyrene		G	<0.087					mg/l
Isophorone		G	<0.087					mg/l
Naphthalene		G	<0.087					mg/l
Nitrobenzene		G	<0.087					mg/l
N-nitrosodimethylamine		G	<0.087					mg/l
N-nitrosodi-n-propylamine		G	<0.087					mg/l
N-nitrosodiphenylamine		G	<0.087					mg/l
Pentachlorophenol		G	<0.175					mg/l
Phenanthrene		G	<0.087					mg/l
Phenol		G	<0.040					mg/l
Pyrene		G	<0.087					mg/l
1,2-Diphenylhydrazine		G	<0.087					mg/l
Total Toxic Organics	5.844	--	5.540					mg/l
			1,20					

RECEIVED
JUL 22 2010
DIVISION OF
ENVIRONMENTAL COMPLIANCE

Sample Point 080 Building 98

Process/ Product	Pharmaceutical OCPSF Non-Regulated	Date Start	Date End	Wastewater Disposition	Wastewater Sample Date	OCPSF-Cyanide, Zinc, Lead	Pharmaceutical-Cyanide
Peptides							
Boc-Leuprolide (8050)	Pharmaceutical	04-12-10	04-12-10	Drum		n/a	No
		04-14-10	04-19-10				
		04-30-10	04-30-10				
		05-02-10	05-08-10				
		05-14-10	05-14-10				
		05-18-10	05-23-10				
		05-26-10	05-27-10				
		05-29-10	05-31-10				
		06-01-10	06-04-10				
		06-13-10	06-13-10				
		04-06-10	04-06-10	MSD	04-06-10	n/a	No
		04-11-10	04-12-10		04-20-10		
		04-19-10	04-22-10				
		04-25-10	04-27-10				
		05-04-10	05-06-10				
		05-09-10	05-11-10				
		05-24-10	05-27-10				
		06-01-10	06-02-10				
		06-07-10	06-09-10				
		06-13-10	06-13-10				
		06-16-10	06-17-10				
		06-20-10	06-22-10				
		06-25-10	06-25-10				
		06-29-10	06-30-10				
Fmoc- Leuprolide (7970)	Pharmaceutical	04-05-10	04-10-10	Drum		n/a	No
		04-12-10	04-15-10				
		04-18-10	04-21-10				
		04-24-10	04-26-10				
		04-29-10	04-29-10				

RECEIVED
JUL 22 2010
DIVISION OF
ENVIRONMENTAL COMPLIAN

METROPOLITAN ST. LOUIS SEWER DISTRICT
2010 INDUSTRIAL USER SELF MONITORING REPORT

PLEASE READ THE INSTRUCTIONS BEFORE COMPLETING THIS REPORT

PART I: IDENTIFYING INFORMATION

Company Name: Mallinckrodt Inc.

Permit No.: 2112059600 - 2.1

Premise Address: 3600 North Second St., St. Louis, MO 63147

Monitoring Period: ____(JAN-MAR) __X___ (APR-JUNE) _____(JULY-SEPT) _____(OCT-DEC)

Samples Collected By: Mallinckrodt

Analysis Performed By: TEKLAB

Part II: ANALYTICAL RESULTS OF SELF MONITORING

MSD SAMPLE POINT REFERENCE NUMBERS		---->		905		905		
DATES ON WHICH SAMPLES WERE COLLECTED		---->		4/15/2010		5/13/2010		
TIMES AT WHICH SAMPLES WERE COLLECTED		---->		10:15:00 AM		9:40:00 AM		
	LIMIT (ave)	LIMIT	RECORD SAMPLE TYPES (G,C,M OR E) & RESULTS BELOW G=grab,C=composite,M=measured flow,E=estimated flow					
PARAMETER	(gm/day)	(gm/day)			Lab results mg/L		Lab results mg/L	UNITS
FLOW			M	48,253		81,976		gal/day
1,2,4-Trichlorobenzene	137.24	555.98	G	18.26	0.100	0.100	0.100	gm/day
1,2-Dichlorobenzene	137.24	555.98	G	0.91	0.005	1.83	0.005	gm/day
1,3-Dichlorobenzene	99.43	266.09	G	0.91	0.005	1.83	0.005	gm/day
1,4-Dichlorobenzene	99.43	266.09	G	0.91	0.005	1.83	0.005	gm/day
2-Nitrophenol	45.51	161.75	G	36.53	0.200	73.20	0.200	gm/day
2-Methyl-4,6-dinitrophenol	54.62	193.96	G	36.53	0.200	73.20	0.200	gm/day
4-Nitrophenol	113.44	403.33	G	36.53	0.200	73.20	0.200	gm/day
Acenapthene	13.3	32.91	G	1.83	0.010	3.66	0.010	gm/day
Anthracene	13.3	32.91	G	1.83	0.010	3.66	0.010	gm/day
Bis(2-ethylhexyl)phthalate	66.52	180.66	G	10.96	0.060	21.96	0.060	gm/day
Diethyl phthalate	32.21	79.13	G	18.26	0.100	36.52	0.010	gm/day
Dimethyl phthalate	13.3	32.91	G	1.83	0.010	3.66	0.010	gm/day
Di-n-butyl phthalate	14	30.11	G	1.83	0.010	3.66	0.010	gm/day
Fluoranthene	15.4	37.81	G	1.83	0.010	3.66	0.010	gm/day
Fluorene	13.3	32.91	G	1.83	0.010	3.66	0.010	gm/day
Hexachlorobenzene	137.24	555.98	G	18.26	0.100	0.100	0.100	gm/day
Hexachlorobutadiene	99.43	266.09	G	18.26	0.100	0.100	0.100	gm/day
Hexachloroethane	137.24	555.98	G	18.26	0.100	0.100	0.100	gm/day
Naphthalene	13.3	32.91	G	1.83	0.010	3.66	0.010	gm/day
Phenanthrene	13.3	32.91	G	1.83	0.010	3.66	0.010	gm/day
Pyrene	14	33.61	G	1.83	0.010	3.66	0.010	gm/day
1,1,1-Trichloroethane	15.4	41.31	G	0.91	0.005	1.83	0.005	gm/day
1,1,2-Trichloroethane	22.4	88.93	G	0.91	0.005	1.83	0.005	gm/day
1,1-Dichloroethane	15.4	41.31	G	0.91	0.005	1.83	0.005	gm/day
1,1-Dichloroethene	15.4	41.31	G	0.91	0.005	1.83	0.005	gm/day
1,2-Dichloroethane	126.04	401.93	G	0.91	0.005	1.83	0.005	gm/day
1,2-Dichloropropane	137.24	555.98	G	0.91	0.005	1.83	0.005	gm/day
Benzene	39.91	93.83	G	0.37	0.002	0.73	0.002	gm/day
Carbon Tetrachloride	99.43	266.09	G	0.91	0.005	1.83	0.005	gm/day
Chlorobenzene	99.43	266.09	G	0.91	0.005	1.83	0.005	gm/day
Chloroethane	77.02	206.57	G	1.83	0.010	3.66	0.010	gm/day
Chloroform	77.72	277.57	G	0.22	0.001	0.44	0.001	gm/day
Chloromethane	77.02	277.57	G	1.83	0.010	3.66	0.010	gm/day
cis-1,3-Dichloropropene	137.24	555.98	G	0.91	0.005	1.83	0.005	gm/day
Ethylbenzene	99.43	266.09	G	0.91	0.005	1.83	0.005	gm/day
Methylene Chloride	77.02	119.04	G	0.91	0.005	1.83	0.005	gm/day
Nitrobenzene	1566.4	4482.84	G	18.26	0.100	0.100	0.100	gm/day
Tetrachloroethene	36.41	114.84	G	0.91	0.005	1.83	0.005	gm/day
Toluene	19.61	51.82	G	0.91	0.005	1.83	0.005	gm/day
trans-1,2-Dichloroethene	17.51	46.21	G	0.91	0.005	1.83	0.005	gm/day
trans-1,3-Dichloropropene	137.24	555.98	G	0.91	0.005	1.83	0.005	gm/day
Trichloroethene	18.21	48.32	G	0.91	0.005	1.83	0.005	gm/day
Vinyl Chloride	67.92	120.44	G	0.37	0.002	0.73	0.002	gm/day
Shaded Values Represent Detection Limits								
Lab Dilution Factor				1,10		1,5		

RECEIVED
JUL 22 2010
DIVISION OF
ENVIRONMENTAL COMPLIANCE

METROPOLITAN ST. LOUIS SEWER DISTRICT
2010 INDUSTRIAL USER SELF MONITORING REPORT

PLEASE READ THE INSTRUCTIONS BEFORE COMPLETING THIS REPORT

PART I: IDENTIFYING INFORMATION

Company Name: Mallinckrodt Inc.

Permit No.: 2112059600 - 2.1

Premise Address: 3600 North Second St., St. Louis, MO 63147

Monitoring Period: _____(JAN-MAR) __X__(APR-JUNE) ____(JULY-SEPT) ____(OCT-DEC)

Samples Collected By: Mallinckrodt Inc

Analysis Performed By: TEKLAB

Part II: ANALYTICAL RESULTS OF SELF MONITORING

MSD SAMPLE POINT REFERENCE NUMBERS	----->		912						
DATES ON WHICH SAMPLES WERE COLLECTED	---->		See attached						
TIMES AT WHICH SAMPLES WERE COLLECTED	---->								
PARAMETER	LIMIT	RECORD SAMPLE TYPES (G,C,M OR E) & RESULTS BELOW G=grab,C=composite,M=measured flow,E=estimated flow							UNITS
FLOW	*	M	See attached						gal/day
DMAC (daily max)	7091	C	See attached						lb/day
DMAC (monthly average)	5459	C	See attached						lb/day
* Monitoring requirement only.									
Lab Dilution Factor			1						

RECEIVED
JUL 22 2010
DIVISION OF
ENVIRONMENTAL COMPLIANCE

DMAC Analysis and Mass Loadings - SP912				
2nd Quarter 2010				Analysis by TEKLAB unless otherwise noted.
Date	Flow	DMAC		
	GPD	mg/l	lb/day	
April -10				
4/5/2010	77,090	1,400	916	
4/12/2010	77,278	1,400	919	
4/19/2010	47,958	950	387	
4/26/2010	84,843	1,600	1153	
May Ave:			**844**	**lb/day**
Daily Max:			**1,153**	**lb/day**
May - 10				
3-May-10	55,706	110	52	
10-May-10	79,008	1500	1006	
17-May-10	62,831	1900	1014	
24-May-10	79,973	2400	1630	
31-May-10	61,315	1300	677	
May Ave:			**876**	**lb/day**
Daily Max:			**1,630**	**lb/day**
June - 10				
7-Jun-10	84,880	1700	1225	
14-Jun-10	73,059	930	577	
21-Jun-10	65,674	1300	725	
28-Jun-10	44,356	820	309	
June Ave:			**709**	**lb/day**
Daily Max:			**1,225**	**lb/day**

RECEIVED

JUL 22 2010

DIVISION OF
ENVIRONMENTAL COMPLIANCE

METROPOLITAN ST. LOUIS SEWER DISTRICT
2010 INDUSTRIAL USER SELF MONITORING REPORT

PART I: IDENTIFYING INFORMATION

Company Name: **MALLINCKRODT INC.**
Permit No.: 2112059600 - 2.1 Effective Date: 07-01-2008 Expiration Date: 05-31-2010
Premise Address: 3600 North Second St., St. Louis, MO 63147
Monitoring Period: ____(JAN-MAR) __X__(APR-JUN) ____(JULY-SEP) ____(OCT-DEC)
Samples Collected By: Mallinckrodt Inc
Analysis Performed By: TEKLAB

Part II: ANALYTICAL RESULTS OF SELF MONITORING

MSD SAMPLE POINT REFERENCE NUMBERS			---->		**915**		**915**				
DATES ON WHICH SAMPLES WERE COLLECTED			---->		4/8/2010		5/8/2010				
TIMES AT WHICH SAMPLES WERE COLLECTED			---->		14:15		14:50				
PARAMETER	EPA METHOD	DAILY MAX	AVG MONTHLY	**RECORD SAMPLE TYPES (G, C, M OR E) & RESULTS BELOW** G=Grab, C-composite, M=measured flow, E=estimated flow							UNITS
FLOW				E	20,000						gal/day
Acetone	524.2	20.70	8.20	G	<1						mg/L
n-Amyl acetate	1666	20.70	8.20	G	<0.100						mg/L
Benzene	524.2	3.00	0.70	G	<0.100						mg/L
n-Butyl acetate	1666	20.70	8.20	G	<0.100						mg/L
Chlorobenzene	524.2	3.00	0.70	G	<0.100						mg/L
Chloroform	524.2	0.10	0.03	G	<0.020						mg/L
1,2-Dichlorobenzene	524.2	20.70	8.20	G	<0.100						mg/L
1,2-Dichloroethane	524.2	20.70	8.20	G	<0.100						mg/L
Diethyl amine	1671	255.00	100.00	G	*		<50				mg/L
Ethyl Acetate	1666	20.70	8.20	G	0.180						mg/L
n-Heptane	1666	3.00	0.70	G	<0.200						mg/L
n-Hexane	1666	3.00	0.70	G	<0.200						mg/L
Isobutyraldehyde	1666	20.70	8.20	G	0.028						mg/L
Isopropyl acetate	1666	20.70	8.20	G	<0.100						mg/L
Isopropyl ether	1666	20.70	8.20	G	<0.100						mg/L
Methylene chloride	524.2	3.00	0.70	G	<0.100						mg/L
Methyl formate	1666	20.70	8.20	G	<1						mg/L
4-Methyl-2-pentanone	1666	20.70	8.20	G	<0.200						mg/L
Tetrahydrofuran	1666	9.20	3.40	G	<0.400						mg/L
Toluene	524.2	0.30	0.20	G	<0.100						mg/L
Triethyl amine	1671	255.00	100.00	G	*		<50				mg/L
Xylenes	1666	3.00	0.70	G	<0.100						mg/L
** Annual monitoring requirement.*											
Dilution by lab					20						

RECEIVED
JUL 22 2010
DIVISION OF
ENVIRONMENTAL COMPLIANCE

METROPOLITAN ST. LOUIS SEWER DISTRICT
2010 INDUSTRIAL USER SELF MONITORING REPORT

PART I: IDENTIFYING INFORMATION

Company Name: **MALLINCKRODT INC.**
Permit No.: 2112059600 - 2.1 Effective Date: 07-01-2008 Expiration Date: 05-31-2010
Premise Address: 3600 North Second St., St. Louis, MO 63147
Monitoring Period: ____(JAN-MAR) __X__(APR-JUN) ____(JULY-SEP) ____(OCT-DEC)
Samples Collected By: Mallinckrodt Inc
Analysis Performed By: TEKLAB Deactivated on 12-01-2009

Part II: ANALYTICAL RESULTS OF SELF MONITORING

MSD SAMPLE POINT REFERENCE NUMBERS			---->		**918**					
DATES ON WHICH SAMPLES WERE COLLECTED			---->							
TIMES AT WHICH SAMPLES WERE COLLECTED			---->							
PARAMETER	EPA METHOD	DAILY MAX	AVG MONTHLY	**RECORD SAMPLE TYPES (G, C, M OR E) & RESULTS BELOW** G=Grab, C-composite, M=measured flow, E=estimated flow						UNITS
FLOW				E	*					gal/day
Acetone	524.2	20.70	8.20	G						mg/L
Ethyl Acetate	1666	20.70	8.20	G						mg/L
Isopropyl acetate	1666	20.70	8.20	G						mg/L
Methylene chloride	524.2	3.00	0.70	G						mg/L
n-Amyl acetate	1666	20.70	8.20	G						mg/L
**** No flow this quarter***										
Dilution by lab										

RECEIVED
JUL 22 2010
DIVISION OF
ENVIRONMENTAL COMPLIANCE

METROPOLITAN ST. LOUIS SEWER DISTRICT
2010 INDUSTRIAL USER SELF MONITORING REPORT

PART I: IDENTIFYING INFORMATION

Company Name: **MALLINCKRODT INC.**
Permit No.: 2112059600 - 2.1 Effective Date: 07-01-2008 Expiration Date: 05-31-2010
Premise Address: 3600 North Second St., St. Louis, MO 63147
Monitoring Period: ____(JAN-MAR) __X__(APR-JUN) ____(JULY-SEP) ____(OCT-DEC)
Samples Collected By: Mallinckrodt Inc
Analysis Performed By: TEKLAB

Part II: ANALYTICAL RESULTS OF SELF MONITORING

MSD SAMPLE POINT REFERENCE NUMBERS			---->		**920**						
DATES ON WHICH SAMPLES WERE COLLECTED			---->		5/12/2010						
TIMES AT WHICH SAMPLES WERE COLLECTED			---->		14:00						
PARAMETER	EPA METHOD	DAILY MAX	AVG MONTHLY	**RECORD SAMPLE TYPES (G, C, M OR E) & RESULTS BELOW** G=Grab, C-composite, M=measured flow, E=estimated flow							UNITS
FLOW				E	22,000	E					gal/day
Tetrahydrofuran	1666	9.20	3.40	G	<0.400	G					mg/L
Toluene	524.2	0.30	0.20	G	<0.100	G					mg/L
Dilution by lab					20						

RECEIVED
JUL 22 2010
DIVISION OF
ENVIRONMENTAL COMPLIANCE

METROPOLITAN ST. LOUIS SEWER DISTRICT
2010 INDUSTRIAL USER SELF MONITORING REPORT

PART I: IDENTIFYING INFORMATION

Company Name: **MALLINCKRODT INC.**
Permit No.: 2112059600 - 2.1 Effective Date: 07-01-2008 Expiration Date: 05-31-2010
Premise Address: 3600 North Second St., St. Louis, MO 63147
Monitoring Period: ____(JAN-MAR) __X__(APR-JUN) ____(JULY-SEP) ____(OCT-DEC)
Samples Collected By: Mallinckrodt Inc
Analysis Performed By: TEKLAB

Part II: ANALYTICAL RESULTS OF SELF MONITORING

MSD SAMPLE POINT REFERENCE NUMBERS					**927**						
DATES ON WHICH SAMPLES WERE COLLECTED					4/8/2010						
TIMES AT WHICH SAMPLES WERE COLLECTED					09:35						
PARAMETER	EPA METHOD	DAILY MAX	AVG MONTHLY	**RECORD SAMPLE TYPES (G, C, M OR E) & RESULTS BELOW** G=Grab, C-composite, M=measured flow, E=estimated flow							UNITS
FLOW				E	2,200						gal/day
Acetone	524.2	20.70	8.20	G	<1						mg/L
n-Amyl acetate	1666	20.70	8.20	G	<0.100						mg/L
Ethyl Acetate	1666	20.70	8.20	G	<0.200						mg/L
Isopropyl acetate	1666	20.70	8.20	G	<0.100						mg/L
Methylene chloride	524.2	3.00	0.70	G	<0.100						mg/L
Dilution by lab					20						

RECEIVED
JUL 22 2010
DIVISION OF
ENVIRONMENTAL COMPLIANCE

METROPOLITAN ST. LOUIS SEWER DISTRICT
2010 INDUSTRIAL USER SELF MONITORING REPORT

PLEASE READ THE INSTRUCTIONS BEFORE COMPLETING THIS REPORT

PART I: IDENTIFYING INFORMATION

Company Name: Mallinckrodt Inc.
Permit No.: 2112059600 - 2.1
Premise Address: 3600 North Second St., St. Louis, MO 63147
Monitoring Period: ____(JAN-MAR) __X__(APR-JUN) ____(JULY-SEP) _____(OCT-DEC)
Samples Collected By: Mallinckrodt Inc
Analysis Performed By: TekLab

Part II: ANALYTICAL RESULTS OF SELF MONITORING

MSD SAMPLE POINT REFERENCE NUMBERS			---->		**930**						
DATES ON WHICH SAMPLES WERE COLLECTED			---->		6/17/2010						
TIMES AT WHICH SAMPLES WERE COLLECTED			---->		8:50						
PARAMETER	EPA METHOD	DAILY MAX	AVG MONTHLY	**RECORD SAMPLE TYPES (G, C, M OR E) & RESULTS BELOW** G=Grab, C-composite, M=measured flow, E=estimated flow							UNITS
FLOW				E	2200						gal/day
Acetone	524.2	20.70	8.20	G	<1.000						mg/L
Ethyl Acetate	1666	20.70	8.20	G	<0.200						mg/L
Isopropyl acetate	1666	20.70	8.20	G	<0.100						mg/L
Methylene chloride	524.2	3.00	0.70	G	<0.100						mg/L
n-Amyl acetate	1666	20.70	8.20	G	<0.100						mg/L
Dilution by lab					20						

RECEIVED
JUL 22 2010
DIVISION OF
ENVIRONMENTAL COMPLIANCE

METROPOLITAN ST. LOUIS SEWER DISTRICT
2010 INDUSTRIAL USER SELF MONITORING REPORT

PLEASE READ THE INSTRUCTIONS BEFORE COMPLETING THIS REPORT

PART I: IDENTIFYING INFORMATION

Company Name: Mallinckrodt Inc.
Permit No.: 2112059600 - 2.1
Premise Address: 3600 North Second St., St. Louis, MO 63147
Monitoring Period: ____(JAN-MAR) __X__(APR-JUN) ____(JULY-SEP) ____(OCT-DEC)
Samples Collected By: Mallinckrodt Inc
Analysis Performed By: TekLab

Part II: ANALYTICAL RESULTS OF SELF MONITORING

Deactivated 12-1-2009

MSD SAMPLE POINT REFERENCE NUMBERS ---->					932					
DATES ON WHICH SAMPLES WERE COLLECTED ---->										
TIMES AT WHICH SAMPLES WERE COLLECTED ---->										
PARAMETER	EPA METHOD	DAILY MAX	AVG MONTHLY	RECORD SAMPLE TYPES (G, C, M OR E) & RESULTS BELOW G=Grab, C-composite, M=measured flow, E=estimated flow						UNITS
FLOW				E	0					gal/day
Acetone	524.2	20.70	8.20	G	*					mg/L
Benzene	524.2	3.00	0.70	G	*					mg/L
Chlorobenzene	524.2	3.00	0.70	G	*					mg/L
Chloroform	524.2	0.10	0.03	G	*					mg/L
1,2-Dichlorobenzene	524.2	20.70	8.20	G	*					mg/L
1,2-Dichloroethane	524.2	20.70	8.20	G	*					mg/L
Ethyl Acetate	1666	20.70	8.20	G	*					mg/L
n-Hexane	1666	3.00	0.70	G	*					mg/L
Methylene chloride	524.2	3.00	0.70	G	*					mg/L
4-Methyl-2-pentanone	1666	20.70	8.20	G	*					mg/L
Tetrahydrofuran	1666	9.20	3.40	G	*					mg/L
Toluene	524.2	0.30	0.20	G	*					mg/L
Xylenes	1666	3.00	0.70	G	*					mg/L
Isobutyraldehyde	1666	20.70	8.20	G	*					mg/L
n-Amyl acetate	1666	20.70	8.20	G	*					mg/L
n-Butyl acetate	1666	20.70	8.20	G	*					mg/L
Isopropyl acetate	1666	20.70	8.20	G	*					mg/L
Isopropyl ether	1666	20.70	8.20	G	*					mg/L
n-Heptane	1666	3.00	0.70	G	*					mg/L
Methyl formate	1666	20.70	8.20	G	*					mg/L
Diethyl amine	1671	255.00	100.00	G	*					mg/L
Triethyl amine	1671	255.00	100.00	G	*					mg/L
**** No flow this quarter***										
Dilution by lab										

RECEIVED
JUL 22 2010
DIVISION OF
ENVIRONMENTAL COMPLIANCE

METROPOLITAN ST. LOUIS SEWER DISTRICT
2010 INDUSTRIAL USER SELF MONITORING REPORT

PLEASE READ THE INSTRUCTIONS BEFORE COMPLETING THIS REPORT

PART I: IDENTIFYING INFORMATION

Company Name: Mallinckrodt Inc.
Permit No.: 2112059600 - 2.1
Premise Address: 3600 North Second St., St. Louis, MO 63147
Monitoring Period: _____(JAN-MAR) __X__(APR-JUN) ____(JULY-SEP) ____(OCT-DEC)
Samples Collected By: Mallinckrodt Inc
Analysis Performed By: TekLab

Part II: ANALYTICAL RESULTS OF SELF MONITORING

MSD SAMPLE POINT REFERENCE NUMBERS			---->			933						
DATES ON WHICH SAMPLES WERE COLLECTED			---->									
TIMES AT WHICH SAMPLES WERE COLLECTED			---->									
PARAMETER	EPA METHOD	DAILY MAX	AVG MONTHLY	**RECORD SAMPLE TYPES (G, C, M OR E) & RESULTS BELOW** G=Grab, C-composite, M=measured flow, E=estimated flow								UNITS
FLOW					E	~~3,000~~ Ø						gal/day
Acetone	524.2	20.70	8.20		G	*						mg/L
n-Amyl acetate	1666	20.70	8.20		G	*						mg/L
Ethyl Acetate	1666	20.70	8.20		G	*						mg/L
Isopropyl acetate	1666	20.70	8.20		G	*						mg/L
Methylene chloride	524.2	3.00	0.70		G	*						mg/L
Dilution by lab												

** No flow this quarter.*

Confirmed zero flow per pc w/ L. Meyer on 8-3-10. AR

RECEIVED
JUL 22 2010
DIVISION OF ENVIRONMENTAL COMPLIANCE

METROPOLITAN ST. LOUIS SEWER DISTRICT
2010 INDUSTRIAL USER SELF MONITORING REPORT

PLEASE READ THE INSTRUCTIONS BEFORE COMPLETING THIS REPORT

PART I: IDENTIFYING INFORMATION

Company Name: Mallinckrodt Inc.
Permit No.: 2112059600 - 2.1
Premise Address: 3600 North Second St., St. Louis, MO 63147
Monitoring Period: ____(JAN-MAR) __X__(APR-JUN) ____(JULY-SEP) ____(OCT-DEC)
Samples Collected By: Mallinckrodt Inc
Analysis Performed By:

Part II: ANALYTICAL RESULTS OF SELF MONITORING

MSD SAMPLE POINT REFERENCE NUMBERS			---->		935							
DATES ON WHICH SAMPLES WERE COLLECTED			---->									
TIMES AT WHICH SAMPLES WERE COLLECTED			---->									
PARAMETER	EPA METHOD	DAILY MAX	AVG MONTHLY	**RECORD SAMPLE TYPES (G, C, M OR E) & RESULTS BELOW** G=Grab, C-composite, M=measured flow, E=estimated flow								UNITS
FLOW				E	0							gal/day
Acetone	524.2	20.70	8.20	G	*							mg/L
Benzene	524.2	3.00	0.70	G	*							mg/L
Chlorobenzene	524.2	3.00	0.70	G	*							mg/L
Chloroform	524.2	0.10	0.03	G	*							mg/L
1,2-Dichlorobenzene	524.2	20.70	8.20	G	*							mg/L
1,2-Dichloroethane	524.2	20.70	8.20	G	*							mg/L
Ethyl Acetate	1666	20.70	8.20	G	*							mg/L
n-Hexane	1666	3.00	0.70	G	*							mg/L
Methylene chloride	524.2	3.00	0.70	G	*							mg/L
4-Methyl-2-pentanone	1666	20.70	8.20	G	*							mg/L
Tetrahydrofuran	1666	9.20	3.40	G	*							mg/L
Toluene	524.2	0.30	0.20	G	*							mg/L
Xylenes	1666	3.00	0.70	G	*							mg/L
Isobutyraldehyde	1666	20.70	8.20	G	*							mg/L
n-Amyl acetate	1666	20.70	8.20	G	*							mg/L
n-Butyl acetate	1666	20.70	8.20	G	*							mg/L
Isopropyl acetate	1666	20.70	8.20	G	*							mg/L
Isopropyl ether	1666	20.70	8.20	G	*							mg/L
n-Heptane	1666	3.00	0.70	G	*							mg/L
Methyl formate	1666	20.70	8.20	G	*							mg/L
Diethyl amine	1671	255.00	100.00	G	*							mg/L
Triethyl amine	1671	255.00	100.00	G	*							mg/L
**** No PEG flow this quarter***												
Dilution by lab												

RECEIVED
JUL 22 2010
DIVISION OF
ENVIRONMENTAL COMPLIANCE

METROPOLITAN ST. LOUIS SEWER DISTRICT
2010 INDUSTRIAL USER SELF MONITORING REPORT

PLEASE READ THE INSTRUCTIONS BEFORE COMPLETING THIS REPORT

PART I: IDENTIFYING INFORMATION

Company Name: Mallinckrodt Inc.
Permit No.: 2112059600 - 2.1
Premise Address: 3600 North Second St., St. Louis, MO 63147
Monitoring Period: ____(JAN-MAR) __X__(APR-JUN) ____(JULY-SEP) ____(OCT-DEC)
Samples Collected By: Mallinckrodt Inc
Analysis Performed By: TEKLAB

Part II: ANALYTICAL RESULTS OF SELF MONITORING

MSD SAMPLE POINT REFERENCE NUMBERS					**936**							
DATES ON WHICH SAMPLES WERE COLLECTED					4/5/2010							
TIMES AT WHICH SAMPLES WERE COLLECTED					8:36							
PARAMETER	EPA METHOD	DAILY MAX	AVG MONTHLY	**RECORD SAMPLE TYPES (G, C, M OR E) & RESULTS** G=Grab, C-composite, M=measured flow, E=estimated flow								UNITS
FLOW				E	14,400							gal/day
Acetone	524.2	20.70	8.20	G	<1							mg/L
n-Amyl acetate	1666	20.70	8.20	G	<0.100							mg/L
Benzene	524.2	3.00	0.70	G	<0.100							mg/L
n-Butyl acetate	1666	20.70	8.20	G	<0.100							mg/L
Chlorobenzene	524.2	3.00	0.70	G	<0.100							mg/L
Chloroform*	524.2	0.10	0.03	G	<0.020							mg/L
1,2-Dichlorobenzene	524.2	20.70	8.20	G	<0.100							mg/L
1,2-Dichloroethane	524.2	20.70	8.20	G	<0.100							mg/L
Diethyl amine	1671	255.00	100.00	G	<50							mg/L
Ethyl Acetate	1666	20.70	8.20	G	<0.200							mg/L
n-Heptane	1666	3.00	0.70	G	<0.200							mg/L
n-Hexane	1666	3.00	0.70	G	<0.200							mg/L
Isobutyraldehyde	1666	20.70	8.20	G	<0.200							mg/L
Isopropyl acetate	1666	20.70	8.20	G	<0.200							mg/L
Isopropyl ether	1666	20.70	8.20	G	<0.100							mg/L
Methylene chloride	524.2	3.00	0.70	G	<0.100							mg/L
Methyl formate	1666	20.70	8.20	G	<1							mg/L
4-Methyl-2-pentanone	1666	20.70	8.20	G	<0.200							mg/L
Tetrahydrofuran	1666	9.20	3.40	G	<0.400							mg/L
Toluene	524.2	0.30	0.20	G	<0.100							mg/L
Triethyl amine	1671	255.00	100.00	G	<20							mg/L
Xylenes	1666	3.00	0.70	G	<0.100							mg/L
* Chloroform Results	Raw Water	SP936										
4/5/2010	0.013	<0.020 mg/l										
Results above reported as the difference between SP936 and Raw Water.												
Dilution by lab					20							

RECEIVED
JUL 22 2010
DIVISION OF
ENVIRONMENTAL COMPLIANCE

METROPOLITAN ST. LOUIS SEWER DISTRICT
2010 INDUSTRIAL USER SELF MONITORING REPORT

PLEASE READ THE INSTRUCTIONS BEFORE COMPLETING THIS REPORT

PART I: IDENTIFYING INFORMATION

Company Name: Mallinckrodt Inc.
Permit No.: 2112059600 - 2.1
Premise Address: 3600 North Second St., St. Louis, MO 63147
Monitoring Period: ____(JAN-MAR) __X__(APR-JUN) ____(JULY-SEP) ____(OCT-DEC)
Samples Collected By: Mallinckrodt Inc
Analysis Performed By: TEKLAB

Part II: ANALYTICAL RESULTS OF SELF MONITORING

MSD SAMPLE POINT REFERENCE NUMBERS			---->		**937**						
DATES ON WHICH SAMPLES WERE COLLECTED			---->		5/12/2010						
TIMES AT WHICH SAMPLES WERE COLLECTED			---->		14:30						
PARAMETER	EPA METHOD	DAILY MAX	AVG MONTHLY	**RECORD SAMPLE TYPES (G, C, M OR E) & RESULTS BELOW** G=Grab, C-composite, M=measured flow, E=estimated flow							UNITS
FLOW				E	22,000						gal/day
Tetrahydrofuran	524.2	9.20	3.40	G	<0.400						mg/L
Toluene	524.2	0.30	0.20	G	<0.100						mg/L
Dilution by lab					20						

RECEIVED
JUL 22 2010
DIVISION OF
ENVIRONMENTAL COMPLIANCE

METROPOLITAN ST. LOUIS SEWER DISTRICT
2010 INDUSTRIAL USER SELF MONITORING REPORT

PLEASE READ THE INSTRUCTIONS BEFORE COMPLETING THIS REPORT

PART I: IDENTIFYING INFORMATION

Company Name: Mallinckrodt Inc.
Permit No.: 2112059600 - 2.1
Premise Address: 3600 North Second St., St. Louis, MO 63147
Monitoring Period: _____(JAN-MAR) __X__(APR-JUN) ____(JULY-SEP) ____(OCT-DEC)
Samples Collected By: Mallinckrodt Inc
Analysis Performed By: TekLab

Part II: ANALYTICAL RESULTS OF SELF MONITORING

MSD SAMPLE POINT REFERENCE NUMBERS			---->		**938**							
DATES ON WHICH SAMPLES WERE COLLECTED			---->		4/20/2010							
TIMES AT WHICH SAMPLES WERE COLLECTED			---->		13:30							
PARAMETER	EPA METHOD	DAILY MAX	AVG MONTHLY	**RECORD SAMPLE TYPES (G, C, M OR E) & RESULTS BELOW** G=Grab, C-composite, M=measured flow, E=estimated flow								UNITS
FLOW				E	3,000							gal/day
Acetone	524.2	20.70	8.20	G	<1							mg/L
n-Amyl acetate	1666	20.70	8.20	G	<0.100							mg/L
Ethyl Acetate	1666	20.70	8.20	G	<0.200							mg/L
Isopropyl acetate	1666	20.70	8.20	G	<0.100							mg/L
Methylene chloride	524.2	3.00	0.70	G	<0.100							mg/L
Dilution by lab					20							

RECEIVED
JUL 22 2010
DIVISION OF
ENVIRONMENTAL COMPLIANCE

DOUG

INDUSTRY REPORT OF FLOW MEASUREMENT AT TIME OF MSD SAMPLING FOR DISCHARGE POINTS HAVING MASS LIMITATIONS

COMPANY NAME: Mallinckrodt PERMIT NO: 211205960

Presented to company representative (Name) Lisa Meyer by:

MSD Ind. Waste Technician Dave Schepers Date 6-29-10 Time 12:25

Certain wastewater discharges from your facility are subject to mass limitations as specified in your Industrial Wastewater Discharge Permit. MSD technicians collected samples from these locations on the date and times indicated below.

In order for MSD to fully evaluate the results of this sampling, you must, for each point, provide MSD with a measured flow for a 24-hour period. The 24 hour period must include the hours between the sample collection Start and End Times shown.

If you have any questions, you may contact Doug Mendoza at (314) 436-8717.

Industry Representative: Please fill in the information on the right side of this table and sign below:

Samp Pt #	Sample Collection by MSD					24-hour Flow Measurement by Company			
	Sample Match #	Start Date	End Date	Start Time	End Time	Start Time	End Time	Total Flow	Units
905	1097968	6-29-10	6-30-10	12:24 p.m	12:12 p.m	1220	1235	28168	GAL

I certify under penalty of Law that the flow information in this document was prepared under my direction or supervision in accordance with a system designed to assure that qualified personnel properly gather and evaluate the information submitted. Based on my inquiry of the person or persons who manage the system, or those persons directly responsible for gathering the information, the information submitted is, to the best of my knowledge and belief, true, accurate and complete. I am aware that there are significant penalties for submitting false information, including the possibility of fine and imprisonment for knowing violations.

Signature: Lisa Meyer Date: 06/30/10

As soon as possible, and no later than 14 days after the Sample End date, send the completed form:

Via US Mail: Attn: Doug Mendoza
Metropolitan St. Louis Sewer District
Office of Environmental Compliance
10 E. Grand Avenue
St. Louis, MO 63147

or, via fax: Attn: Doug Mendoza
(314) 436-8753

MSD-OEC 01/02

COVIDIEN

May 27, 2010

Mr. Doug Mendoza
Manager, Environmental Compliance
St. Louis Metropolitan Sewer District
10 East Grand Ave
St. Louis, MO 63147

RE: Follow-up to an Unplanned Release from Building 6 at the St. Louis Plant
PERMIT NO. 2112059600-2.1

Dear Mr. Mendoza:

This letter is a follow-up to an unplanned release of approximately 400 gallons of an organic plant material slurry from Building 6 at the Mallinckrodt St. Louis Plant's as reported via phone call to MSD dispatch on May 23, 2010.

At approximately 1500 on May 23, 2010, an organic plant material slurry was being transferred from one process tank to another. An operator noticed that the level in the transfer tank was lower than expected. Upon investigation, it was discovered that the valve to the sewer was inadvertently left open causing the release of approximately 400 gallons.

Operators have completed a review of the requirement to verify valve alignments prior to transfer. Long term corrective action includes the evaluation and installation of actuated valves that will interlock the sewer valve when pumping the slurry to its transfer tank.

The organic plant material slurry was discharged to a plant sewer and to MSD through the plant's main outfall, SP010.

If you have any questions or need additional information, please call me at 314.654.3374.

Sincerely,

Lisa Meyer
Senior HSE Engineer

COVIDIEN/MALLINCKRODT
3600 NORTH SECOND STREET
ST. LOUIS, MO 63147

TELEPHONE: 314-654-2000
FAX: 314-654-1251

RECEIVED
MAY 28 2010
DIVISION OF
ENVIRONMENTAL COMPLIANCE

Metropolitan St. Louis Sewer District
Division of Environmental Compliance
10 East Grand Avenue
St. Louis, MO 63147-2913
Phone: 314.768.6200 www.stlmsd.com

May 26, 2010

Lisa Meyer
MALLINCKRODT
3600 North Second St.
St. Louis, MO 63147

Re: Wastewater User Charge Billing for Special Discharge

Dear Ms. Meyer:

This is to advise you of the wastewater user charges applicable to an on-site special discharge approved in our letter to you dated May 4, 2010. You were advised of the extra-strength surcharges as part of the original approval letter. That charge was determined using the ethylene glycol concentration in your application for special discharge. The discharge date and quantity are from information submitted by you in a letter dated May 24, 2010.

Our Finance Department will bill you by invoice for the charges described below. These charges are based on the rates in MSD Wastewater User Charge Ordinance 13021. For your convenience, using the volume and strength of the waste discharged, the ordinance rates have been converted to a per-gallon basis.

PARTY TO BILL: Addressee

BILLING IS FOR: On-Site Special Discharge

DISCHARGE PERIOD: May 9-18, 2010

SOURCE OF WASTE: Ethylene glycol solution at the building 250 Mallinckrodt facility located at 3600 North Second Street, St. Louis, Missouri.

Discharge Period	Billing Item	Quantity	Units	Rate	Charge
5/9-12/10	Extra-Strength Surcharge	2,480	Gal	$0.11	$272.80
5/13-18/10	Extra-Strength Surcharge	3,495	Gal	$0.06	$209.70
Totals:	------	5,975	Gal	-----	$482.50

Please do not pay until you receive our invoice. If you have any questions, please contact me at (314) 436-8755.

Sincerely,
METROPOLITAN ST. LOUIS SEWER DISTRICT
Steven M. Grace
Steve Grace
Environmental Assistant Engineer

bv

pc Toni McGarry - Finance Dept.
Nora Estopare

File: IU, MALLINCKRODT INC [2112059600], 3600 North Second Street, St. Louis, Missouri

COVIDIEN

MAY 24, 2010

Mr. Steve Grace
Metropolitan St. Louis Sewer District
Department of Environmental Compliance
10 East Grand Avenue
St. Louis, MO 63147-2913

RE: Special Discharge Follow-up - PERMIT NO. 2112059600-2.1

Dear Mr. Grace:

On May 4, 2010 an approval from MSD was received to discharge 2100 gallons of wastewater to MSD for treatment. The wastewater was a 10% ethylene glycol and water solution from Building 250 chiller maintenance. Two subsequent phone calls were made to you to increase the amount discharged to an estimated 6000 gallons. The following documents the days this wastewater was discharged including discharge volumes and concentration of the ethylene glycol solutions:

- May 9: 500 gallons at 10%
- May 11: 1320 gallons at 10%
- May 12: 660 gallons at 10%
- May 13: 1955 gallons at 5%
- May 15: 1340 gallons at 5%
- May 18: 200 gallons at 5%

Actual discharge total was 5975 gallons: 2480 gallons at 10% ethylene glycol and 3495 gallons at 5% ethylene glycol. All of the wastewater was discharged through plant sewers to the plant's neutralization system and then to MSD.

If you have any questions or need additional information, please call me at 314.654.3374.

Sincerely,

Lisa Meyer
Senior HSE Engineer

COVIDIEN/MALLINCKRODT
3600 NORTH SECOND STREET
ST. LOUIS, MO 63147

TELEPHONE: 314-654-2000
FAX: 314-654-1251

Metropolitan St. Louis Sewer District

Division of Environmental Compliance
10 East Grand Avenue
St. Louis, MO 63147-2913
Phone: 314.768.6200 www.stlmsd.com

May 26, 2010

Lisa Meyer
MALLINCKRODT
3600 North Second St.
St. Louis, MO 63147

Re: Wastewater User Charge Billing for Special Discharge

Dear Ms. Meyer:

This is to advise you of the wastewater user charges applicable to an on-site special discharge approved in our letter to you dated May 10, 2010. You were advised of the extra-strength surcharges as part of the original approval letter. That charge was determined using the chemical oxygen demand concentration in the laboratory analytical report submitted in conjunction with your application for special discharge. The discharge date and quantity are from information submitted by you in a letter dated May 24, 2010.

Our Finance Department will bill you by invoice for the charges described below. These charges are based on the rates in MSD Wastewater User Charge Ordinance 13021. For your convenience, using the volume and strength of the waste discharged, the ordinance rates have been converted to a per-gallon basis.

PARTY TO BILL: Addressee

BILLING IS FOR: On-Site Special Discharge

DISCHARGE PERIOD: May 19-20, 2010

SOURCE OF WASTE: Chiller water containing lithium bromide from plant's absorption chiller at the Mallinckrodt facility located at 3600 North Second Street, St. Louis, Missouri.

Discharge Period	Billing Item	Quantity	Units	Rate	Charge
5/19-20/10	Extra-Strength Surcharge	3,800	Gal	$0.01	$38.00
Totals:	------	3,800	Gal	-----	$38.00

Please do not pay until you receive our invoice. If you have any questions, please contact me at (314) 436-8755.

Sincerely,
METROPOLITAN ST. LOUIS SEWER DISTRICT

Steven M. Grace

Steve Grace
Environmental Assistant Engineer

bv

pc Toni McGarry - Finance Dept.
Nora Estopare
File: IU, MALLINCKRODT INC [2112059600], 3600 North Second Street, St. Louis, Missouri

COVIDIEN

MAY 24, 2010

Mr. Steve Grace
Metropolitan St. Louis Sewer District
Department of Environmental Compliance
10 East Grand Avenue
St. Louis, MO 63147-2913

RE: Special Discharge Follow-up - PERMIT NO. 2112059600-2.1

Dear Mr. Grace:

On May 10, 2010 an approval from MSD was received to discharge 3800 gallons of wastewater to MSD for treatment. The wastewater was chiller water containing lithium bromide from the plant's absorption chiller.

On May 19-20, 2010 an estimated amount of 3800 gallons of the lithium bromide wastewater was discharged through plant sewers to the plant's neutralization system and to MSD.

If you have any questions or need additional information, please call me at 314.654.3374.

Sincerely,

Lisa Meyer
Senior HSE Engineer

COVIDIEN/MALLINCKRODT
3600 NORTH SECOND STREET
ST. LOUIS, MO 63147

TELEPHONE: 314-654-2000
FAX: 314-654-1251

SR

COVIDIEN

May 17, 2010

Mr. Scott Rehmer
Assistant Engineer, Environmental Compliance
St. Louis Metropolitan Sewer District
10 East Grand Ave
St. Louis, MO 63147

RE: Response to Draft Permit
MSD Permit 2112059600 – 3

Dear Mr. Rehmer,

This letter is in response to our draft permit dated April 22, 2010. We have reviewed the permit and accept its conditions as written.

If you have any questions or need additional information, please contact me at 314.654.3374.

Sincerely,

Lisa Meyer
Senior HSE Engineer

RECEIVED
MAY 18 2010
DIVISION OF
ENVIRONMENTAL COMPLIANCE

COVIDIEN/MALLINCKRODT
3600 NORTH SECOND STREET
ST. LOUIS, MO 63147

TELEPHONE: 314-654-2000
FAX: 314-654-1251

SR

COVIDIEN

May 17, 2010

Mr. Doug Mendoza
Manager, Environmental Compliance
St. Louis Metropolitan Sewer District
10 East Grand Ave
St. Louis, MO 63147

RE: Follow-up to the Unplanned Ioversol Solution Release from Building 505 at the St. Louis Plant
PERMIT NO. 2112059600-2.1

Dear Mr. Mendoza:

This letter is a follow-up to an unplanned release of 40 gallons of a water based Ioversol solution from Building 505 at the Mallinckrodt St. Louis Plant's as reported via voicemail message and phone call on May 13, 2010.

At approximately 0500 on May 13, 2010, the release of an estimated 40 gallons of a water based Ioversol (contrast media) solution occurred in Building 505. An Ioversol solution was being transferred from one process tank to another, when the operator noticed that there was no level increase in the receiving process tank. The transfer was immediately stopped when it was discovered that a 1-inch sanitary clamp on the transfer line had failed. The sanitary clamp has been replaced.

The water based Ioversol solution was discharged to a plant sewer and to MSD through the plant's main outfall, SP010.

If you have any questions or need additional information, please call me at 314.654.3374.

Sincerely,

Lisa Meyer

Lisa Meyer
Senior HSE Engineer

RECEIVED
MAY 18 2010
DIVISION OF
ENVIRONMENTAL COMPLIANCE

COVIDIEN/MALLINCKRODT
3600 NORTH SECOND STREET
ST. LOUIS, MO 63147

TELEPHONE: 314-654-2000
FAX: 314-654-1251

PIMS - Pretreatment Information Management System [PIMS St. Louis (PIMS)]

File Edit Records Worklists Reports/Letters Tools Window Help

General Info | Sample Points | Metering | Monitoring | Permits | Results | Compliance | Enforcement | Water Use | Spec Dischrg

Facility ID: 2112059600 Name: MALLINCKRODT INC [2112059600] SIU: ☑ Class: Categorical Industrial User

Results

Start Date: 07/01/2009 End Date: Apply

Events | Inspections | Sampling | Limit Comp | Violations | SMDE | Gen Rpts | **Notifications** | Surcharge | Surcharge Export

Notification Type	Date
Problem Discharge - 5 Day Written Follow Up	12/23/2009
Problem Discharge - Immediate Notice	12/17/2009
Problem Discharge - 5 Day Written Follow Up	11/20/2009
Problem Discharge - Immediate Notice	11/16/2009
Self-Mon Discharge Viol - 1 Day Notice	09/03/2009
Problem Discharge - Immediate Notice	08/10/2009
Problem Discharge - Immediate Notice	05/13/2010

Text

Ken Coffey from Mallinckrodt called Doug Mendoza of MSD at 6:30 am and left a telephone message: at 5:00 am, Mallinckrodt had a hose clamp failure in bldg 505, which allowed about 40 gallons of Ioversol to go to sewer. It appears the failure was caused by corrosion in the clamp.

Ready | May 13, 2010 7:35:46 AM

start | Inbox - Microsoft Out... | Permit Files - Laserfiche | PIMS - Pretreatment ... | 7:35 AM

TO: MALLINCKRODT INC [2112059600] file – SP809 for Construction and decon water from FUSRAP radioactive soil excavation. (aka SLDS) IU

ST LOUIS AIRPORT FUSRAP SITE [9012138501] file – SP801 for Treated excavation water from radioactive contaminated soil cleanup site. (aka SLAPS)

FROM: Nora Estopare

DATE: May 12, 2010

RE: Special Discharge On-Site Source Inspection

On 5/11/10, Steve Grace and I met with Ron Frerker of the USACOE along with Gwenan Skoba, Jerry Cross and others of Shaw Environmental & Infrastructure, Inc. We arrived at the SLDS site at 9:00 a.m. and later traveled to the SLAPS site arriving at 11:00 a.m. to make our site inspections. The purpose was to inspect the ongoing radioactive soil remediation and the associated pretreatment systems being used to treat excavation rainwater/groundwater accumulations prior to discharge into the MSD collection system. We also discussed MSD's ES-Retooling effort and explained that we needed maps showing the Record of Decision (ROD) boundary for both Formerly Utilized Sites Remedial Action Program (FUSRAP) sites to label no-entry manholes for MSD worker safety.

MALLINCKRODT INC [2112059600] – (aka SLDS)

Mallinckrodt had a process for extracting pure metals from thorium, radium and uranium ores. The waste generated during the Mallinckrodt extraction process is referred to as "CT" and was buried on the SLDS site in many locations. All but one of the on-site CT burial locations have been excavated/remediated and hauled to Utah or Idaho for disposal depending on the level of radioactivity. The remaining on-site CT burial location is scheduled to be excavated/remediated within the next year or two after the building over top of it has been razed.

Further processing after the extraction generated waste referred to as "MED". The MED was trucked out to the SLAPS site for disposal.

Any remaining radioactive raw materials were sent back to their place of origin after the extraction process was moved to WELDON SPRING (WSSRAP) [SOUR053000].

The SLDS combined sewer system that has been exposed to the radioactive wastes may be contaminated with CT, MED or both. However, the many subsequent years of wastewater flushing has removed most to all of the residual radioactive contamination.

There are two pretreatment systems on the SLDS property that are used to treat excavation rainwater/groundwater accumulations prior to discharge into the MSD collection system. The first is active and in the vicinity of a recently completed CT excavation/remediation. The second is inactive and discharges downgradient into the same MSD sewer line as the does the first. MSD installed a diverter in this sewer several years ago so that all of the SLDS associated discharges would be routed to the Bissell Treatment Plant rather than the Mississippi River.

Both pretreatment systems have at least two main holding tanks preceding 1-micron filtration, then if determined necessary, the capability for carbon adsorption and ion exchange. The

second system has an initial holding tank and 50 to 60-micron filtration preceding the main holding tanks. The 1-micron filtration has demonstrated sufficient removal efficiency so that ion exchange with resin selective of uranium is unnecessary. The carbon adsorption pretreatment for the removal of PCBs has also been determined to be unnecessary.

(Note: The ion exchange resin has proven to be effective in removing uranium. However, a previous site experience using the ion exchange unit resulted in elevated uranium levels in the effluent due to resin interference from a potassium chloride release. Covidian released potassium chloride that flowed into an ongoing CT remediation excavation. The rainwater/groundwater containing potassium chloride acted to recharge the ion exchange unit, releasing the absorbed uranium. Consequently, the ion exchange unit is only used if absolutely necessary which hasn't been the case in some time.)

Any time a new CT remediation area is entered, the first two batches of rainwater/groundwater are settled in the main holding tanks, sampled without any pretreatment and the analytical results are sent to Steve Grace for approval. After receiving Steve's approval, the main holding tanks are discharged through the 1-micron filter and discharge continues until the CT remediation area is completed.

ST LOUIS AIRPORT FUSRAP SITE [9012138501] – (aka SLAPS)

The MED contamination at the SLAPS site is surficial in comparison to the CT contamination at the SLDS site. The HISS property was the single above ground MED disposal location near the center of the ROD boundary. There is also MED deposition along the various former haul roads.

MED remediation is currently being completed on vicinity property VP-02(L) with rainwater accumulations being stored in Baker holding tanks staged on the HISS property. MED soil remediation is also being completed on the Futura property with rainwater accumulations being stored in additional Baker holding tanks.

Any time a new MED remediation area is entered, the first two batches of rainwater/groundwater are settled in the Baker holding tanks, sampled without any pretreatment and the analytical results are sent to Steve Grace for approval. After receiving Steve's approval, rainwater from the Baker holding tanks is pretreated with1-micron filtration and discharge continues until the MED remediation area is completed. The Special Discharge approval specifies pretreatment with 2-micron filtration, but 1-micron is used as a quality assurance step. There is the ability to go to 2-micron filtration should there be filter plugging problems at a particular MED remediation location. There are not any ion exchange units in place since the SLAPS site does not have the heavy metal problems that the SLDS site does.

Previously, physical chemical methods including ion exchange were used and unsuccessful in removing selenium. For this reason, biotreatment was selected for the removal of selenium and occurred in tankage along McDonnell Boulevard. Later, the requirement for selenium pretreatment was modified by MSD to no selenium pretreatment required at a rate limited discharge based on analytical provided when a new MED remediation area is entered.

Follow-up

Steve has already renewed both the SLDS and SLAPS Special Discharge approvals extending them for another two years with July 2012 expiration dates.

Ron Frerker has instructed Shaw to revise their SLDS site map to include the entire ROD boundary. The SLAPS map provided in 2008 shows the current ROD for our no-entry manhole labeling purposes.

Nora C. Estopare

From: Steve Grace
Sent: Wednesday, May 12, 2010 4:10 PM
To: Nora C. Estopare
Subject: FW: answers to questions

-----Original Message-----
From: Frerker, Ron MVS [mailto:Ron.Frerker@usace.army.mil]
Sent: Wednesday, May 12, 2010 4:04 PM
To: Steve Grace
Cc: Skoba, Gwenan
Subject: answers to questions

Steve,
Please see answers below after your questions.
Ron

-----Original Message-----
From: Steve Grace [mailto:sgrace@stlmsd.com]
Sent: Wednesday, May 12, 2010 2:50 PM
To: Frerker, Ron MVS
Cc: Skoba, Gwenan
Subject: RE: rad safety

Hello Ron and Gwenan,

I have a couple of follow-up questions regarding our site visits yesterday.

Regarding the ionic exchange system at the SLDS site, you indicated that previous site experience using the ion exchange unit has resulted in higher uranium levels due to insoluble uranium compounds being drawn into solution by potassium chloride. What is the reason for the large potassium chloride usage at that site?

A. Actually, the U was taken out by the IX. Covidian released some KCl that flowed from their release point into our excavation. This in turn then acted as a recharge for the IX unit and displaced the U which was adsorbed on the resin. Based on the gross beta values (from K-40), we calculated that it was about a 3% solution that entered into our excavation. Since that experience, we only use the unit if absolutely necessary; which hasn't been the case in quite some time. It has other problems which I won't get into.

Regarding the groundwater/rainwater stored in the baker tanks used at the SLAPS site, is that wastewater treated the same way as at SLDS...using a 1-micron filter with the carbon adsorption units and ion exchange system as back-ups?

A. No. Since we've never had the heavy metals problem in N. County (not a chemical plant location), we've never had an IX unit in place. We do have the capacity to use carbon if necessary, but the area really doesn't have much in the line of organics like PCBs present. We do use the bag filter.
Our agreement calls for a 2 micron filter, however we use a 1 micron as a QA step. We then have the ability to go to the 2 micron if a particular location causes filter plugging problems. BTW, we have tried physical chemical methods for Se including IX and they were not successful. Hence the reason for the biotreatment.

Thanks in advance,
Steve Grace

-----Original Message-----
From: Frerker, Ron MVS [mailto:Ron.Frerker@usace.army.mil]
Sent: Wednesday, May 12, 2010 10:16 AM

To: Steve Grace
Cc: Skoba, Gwenan; Rankins, Jonathan E MVS
Subject: rad safety

Greetings Steve,
I checked with our HP for the Corps, and for practical purposes, sewers on the N. County site are safe for your workers. While contamination was found in some locations at HISS/Futura, the moisture content prevents the inhalation pathway from being complete. And of course, we know your folks know better than to ingest the sediment in sewers, so rad safety not a problem.
We would of course have the usual utility support for your endeavors.
Jon, if you have anything to add or to correct, please feel free to jump in.
Ron

Metropolitan St. Louis Sewer District

Division of Environmental Compliance
10 East Grand Avenue
St. Louis, MO 63147-2913
Phone: 314.768.6200 www.stlmsd.com

May 10, 2010

Sharon R. Cotner
DEPARTMENT OF THE ARMY,
CORPS OF ENGINEERS
8945 Latty Avenue
Berkeley, MO 63134

Re: FUSRAP St. Louis Downtown Site

Dear Ms. Cotner:

We have reviewed your request dated March 16, 2010 for extension of a special discharge originally approved in our letters dated July 23, 2001 and October 13, 2004, and extended through July 23, 2010 in our letters dated June 19, 2006 and May 22, 2008. This approval was for stormwater and groundwater that accumulates in excavations of radioactively contaminated soils at the St. Louis Downtown FUSRAP site located at the Mallinckrodt facility, 3600 N. 2nd Street, St. Louis, Missouri. You have requested a two-year extension of your current approval.

Your request for an extension is granted. This approval will expire on July 23, 2012.

As a condition of this approval, you must notify us of any changes that would affect the characteristics of this discharge. The self-monitoring reporting requirements and all other conditions of the above referenced approvals remain in effect.

Please contact me at (314) 436-8755 with questions or comments.

Sincerely,
METROPOLITAN ST. LOUIS SEWER DISTRICT

Steven M. Grace

Steve Grace
Environmental Assistant Engineer

bv

File: IU – MALLINCKRODT INC [2112059600], SP809

DEPARTMENT OF THE ARMY
ST. LOUIS DISTRICT, CORPS OF ENGINEERS
8945 LATTY AVENUE
BERKELEY, MISSOURI 63134

REPLY TO
ATTENTION OF:
FUSRAP/SLAPS

March 16, 2010

Formerly Utilized Sites Remedial Action Program (FUSRAP)

SUBJECT: St. Louis Airport Site (SLAPS) FUSRAP Metropolitan Sewer District (MSD) Discharge Permit

Mr. Steve Grace
St. Louis Metropolitan Sewer District
Office of Environmental Compliance
10 East Grand Avenue
St. Louis, Missouri 63147

Dear Mr. Grace:

The U. S. Army Corps of Engineers (USACE) is requesting a two year extension to the St. Louis Airport Site Discharge Permit which includes North County Vicinity Properties. The total amount of water discharged from these sites would remain limited to 100,000 gallons per day, unless otherwise authorized by MSD. The maximum cumulative mass of selenium that can be discharged to MSD by SLAPS, Hazelwood Interim Storage Site, and vicinity properties will be limited to 76 grams per day as is currently the practice.

Please contact Mr. Ron Frerker at (314) 260-3936, if you have any questions.

Sincerely,

Sharon Cotner

Sharon Cotner
FUSRAP Program Manager

Metropolitan St. Louis Sewer District
Division of Environmental Compliance
10 East Grand Avenue
St. Louis, MO 63147-2913
Phone: 314.768.6200 www.stlmsd.com

May 10, 2010

Lisa Meyer
MALLINCKRODT
3600 North Second St.
St. Louis, MO 63147

Dear Ms. Meyer:

We have reviewed your application dated May 4, 2010 requesting approval to discharge 3,800 gallons of wastewater to the Metropolitan St. Louis Sewer District for treatment. This wastewater is chiller water containing lithium bromide from plant's absorption chiller at the Mallinckrodt facility located at 3600 North Second Street, St. Louis, Missouri. Information contained in the application indicated a leak occurred in the absorption chiller, and the lithium bromide solution in the chiller tubes mixed with the cooling tower water. We understand that the wastewater will be discharged through sampling point 010.

Based on the information you provided, this wastewater meets MSD Ordinance 12559 standards and is approved for discharge into a sanitary or combined sewer on site. This approval is valid for 30 days from the date of this letter.

You must be certain the waste is discharged into a sanitary or combined sewer inlet only. This letter does not authorize any discharge to a separate storm sewer, or to any watercourse, as any such discharge would be in violation of state and federal laws. **Please notify me at the number below when the discharge is to commence, and please ensure the onsite personnel discharging the wastewater in question are provided with a copy of this letter.**

For billing purposes associated with this high COD wastewater, you must confirm the volume of this wastewater discharged to us, in writing, at the completion of the discharge. This report is due no later than 28 days after this approval expires. Please refer to this letter and include the date of the discharge when providing that figure. Under the provisions of Ordinance 13021, you will be billed by invoice at the billing rate in effect at the time of discharge. The current rate contained in MSD Ordinance 13021, is $275.76 per ton for COD over 600 mg/L. Using the assumed COD concentration contained in the laboratory analytical report provided, it is estimated that you will be discharging less than one ton of COD over 600 mg/L. (Our quantitative estimate is 0.15 tons COD times $275.76.) Please do not pay this amount until you receive our invoice.

This discharge has been approved based upon the information and sample analysis you provided, and is subject to the conditions stated above. This approval may be revoked by the District at any time if any of the information is found to be incorrect, or if the conditions of this approval are violated. Also, if the discharge causes any operational or maintenance problem within the District's collection or treatment system, or results in violations of any conditions of the District's NPDES permit, Mallinckrodt will be considered responsible for damages.

If you have any questions, please call me at (314) 436-8755.

Sincerely,
METROPOLITAN ST. LOUIS SEWER DISTRICT

Steven M. Grace

Steve Grace
Environmental Assistant Engineer

bv
pc: Nora Estopare
File: IU, MALLINCKRODT INC [2112059600]

C1A

SD EVALUATION CHECKLIST - ON SITE

APPLICATION INFORMATION

Source Name: Mallinckrodt Inc.

Premise Address: 3600 N. 2nd St.

Send approval letter to applicant

Evaluated by: SMG MCS 5/10/10

Date: 5/10/10

Application Dated: 5/4/10 Received: 5/4/10 All Requested Info. Received: 5/10/10

SOURCE FILING/DESCRIPTION

1 - Source in PIMS? (Y) N
2 - If No, on IU Cross-Ref list? * Y / N
3 - If No, MSD Account # from E-CIS? Y / N
4 - If none, on "Source" list (pre-IMS)? ** Y / N
5 - If No, assigned SOUR# from PIMS.

* o:\costrecovery\cross reference xls file

** o:\costrecovery\sourlist xls file

SOURCE TYPE (circle): (IU) / Dead IU / SD

INDUSTRY ID: 21120596-00

Sample Point: No. Assigned: 847 Description: chiller water containing lithium bromide from the plant's absorption chiller

Normal WW flow from premise? N/A _____ ccf/month, 2,992,101 GPD, _____ GPH. from SP010

REGULATORY STATUS

Is waste a Hazardous Waste? (N) / Y _____

Categorical standards apply? (N) / Y _____

Contain PCB/ asbestos/ radioactive/ dioxin/ used oil? (N) / Y _____

Regulatory Agency Oversight? (N) / Y _____

DISCHARGE CONSIDERATIONS At MSD's connection:

Ordinance Limits (12559, p32) exceeded? (N) / Y _____

Ordinance other limits exceeded (dye, flash pt <140F, temp >140F, obstruction, nuisance foaming/odor, corrosion causing): (N) / Y _____

Water Quality Standard exceeded? (N) / Y _____

Fumes in sewer exceed PEL/TLV limits? (N) / Y _____

Vapors in sewer exceed 10% of LEL? (N) / Y _____

RECOMMENDATION: (APPROVE) / DENY (cc WWTP Mgr for timed discharge)

APPROVAL CONDITIONS:

Timed Discharge (COD/BOD/WQ/foam): (N) / Y Limit = _____ gal/hour

Require Treatment before Discharge? (N) / Y _____

Laboratory analysis fee due? (N) / Y $_____

SMR required? (N) / Y Frequency/analysis: _____

SMR log: (N/A) / Remediation.xls / Nonremediation.xls

Volume Billing applies (water unmetered or credited)? (N) / Y

Bill High Strength? N / (Y) Yes, If use >60,000 gal/month water ___and, > norm WW strgth

Surcharge calculation attached: N/A / N / (Y)

Expiration log updated: (N/A) / N / Y

O:\CostRecovery\Special Discharge\C1a Checklist doc

On-Site Special Discharge High Strength Flow Rate and Surcharge Calculator

1 GENERAL INFORMATION:

Date: 05/10/10
Calculated by: Steve Grace
Source name: Mallinckrodt, Inc.
Waste material: chiller water containing lithium bromide from plant absorption chiller
Discharge volume: 3,800 gallons

2 STRENGTH INFORMATION:

Sample BOD =	0	mg/l =	0	lbs BOD to be discharged
Sample COD =	10,300	mg/l =	326	lbs COD to be discharged
Sample TSS =	59	mg/l =	for surcharge calculation only	

3 PLANT DATA: 2010

Treatment area: Bissell

	Flow (MGD)	BOD (mg/L)	COD (mg/L)	BOD (lb/hr)	COD (lb/hr)	Max Loading = 10% BOD (lb/hr)	COD (lb/hr)
Bissell	**140**	**146**	**292**	**7,113**	**14,227**	**711**	**1,423**
Coldwater	26	188	377	1,704	3,408	170	341
Fenton	5	388	776	679	1,357	68	136
Grand Glaize	16	129	405	708	2,218	71	222
Lemay	131	78	210	3,531	9,584	353	958
Lower Meramec	13	124	409	543	1,785	54	179
Missouri River	27	280	559	2,671	5,341	267	534

4 MINIMUM REQUIRED FLOW RATE:

	BOD (hours	BOD (gpm)	COD (hours)	COD (gpm)
Bissell	**0.00**	**0**	**0.23**	**276**
Coldwater	0.00	0	0.96	66
Fenton	0.00	0	2.40	26
Grand Glaize	0.00	0	1.47	43
Lemay	0.00	0	0.34	186
Lower Meramec	0.00	0	1.83	35
Missouri River	0.00	0	0.61	104

5 SURCHARGE AND VOLUME BILLING

Is volume subject to billing? no (yes/no)
Ratio of BOD/COD = 0.00

(Sample BOD) - 300 = 0 mg/l subject to surcharge
(sample COD) - 600 = 9700 mg/l subject to surcharge
(sample TSS) - 300 = 0 mg/l subject to surcharge

If BOD/COD ratio <= 0.35, the following calculations use the COD value. Otherwise they use the BOD value

Current rates under Ordinance: 12754

Volume =	$ 1.92	/CcF
BOD =	$ 551.52	/ton
COD =	$ 275.76	/ton
TSS =	$ 218.90	/ton

Flow charge = $ - based on volume = 5.08 CcF
BOD surcharge = $ -
COD surcharge = $ 42.40
TSS surcharge = $ -
Total discharge charge = $ 42.40
Customer charge = $ 42.40 DEC charges special discharge customers for total charges > $20.00
Approximate charge/gallon = $ 0.01

Comments

require volume report for billing purposes
no discharge rate applies as discharge will take less than one hour

COVIDIEN

Facsimile Communication

To: Mr. Steve Grace

Company: MSD Environmental Compliance

Fax Number: 314.436.8766

Date: May 4, 2010

Number of Pages *(including cover sheet)*: 15

Health, Safety, Environmental

Lisa Meyer
Senior HSE Engineer

Covidien/Mallinckrodt
3600 N. Second St.
St. Louis, Missouri 63147

Telephone 314-654-3374
Facsimile 314-654-1251

- ☐ For your information
- X Please respond
- ☐ Urgent
- ☐ Confidential

Comments:

Dear Mr. Grace,

Attached please find an application for the Special Discharge of water from an absorption chiller. If you have any questions or need additional information, please contact me.

Thank you,

Lisa Meyer

Metropolitan St. Louis Sewer District

Phone No. (314) 436-8710
Division of Environmental Compliance, 10 East Grand Avenue, St. Louis, Missouri 63147 Fax No. (314) 436-8766

APPLICATION FOR SPECIAL DISCHARGE APPROVAL

I. WASTEWATER SOURCE IDENTIFICATION:

Site Name: Mallinckrodt
Premise Address: 3600 North 2nd St.
City: St. Louis State: MO Zip: 63147
Owner: Mallinckrodt
Contact Person: Lisa Meyer
Title: Senior HSE Engineer
Phone: 314.654.3374 Fax: 314.654.1251

II. APPLICANT (mailing information):

Applicant Name: Lisa Meyer
Title: Senior HSE Engineer
Company Name: Mallinckrodt
Mailing Address: 3600 North 2nd St.
City: St. Louis State: MO Zip: 63147
Phone: 314.654.3374 Fax: 314.654.1251

III. A. MATERIAL TO BE DISCHARGED (check all applicable boxes):

1. Wastewater description/location: Chiller water from plant's absorption Chiller (Lithium Bromide)
2. Process/activity generating wastewater: A cooling tower water leak occurred in the absorption chiller. The result was the water was removed from the absorption chiller. Analysis of water is attached. Chiller T : 1000 gallons Chiller D : 2800 gallons
3. Physical and chemical composition: List all constituents, and known or potentially present regulated contaminants below.
   ☐ See separate listing enclosed, and/or ☑ See analytical results enclosed, and/or ☐ Material Safety Data Sheet enclosed.

DESCRIPTION	RANGE	UNIT
Chiller T	10.5	pH
Chiller D	10.5	pH

DESCRIPTION *(continued)*	RANGE	UNIT

4. Is this wastewater from a process subject to EPA's categorical standards in 40 CFR Subchapter N? ☐ Yes ☑ No
   a. If yes, the applicable standards are in: 40 CFR Part _____, Subpart _____ ☐ Existing source ☐ New source
5. Does this wastewater contain polychlorinated biphenyls, asbestos or radioactive material? ☐ Yes ☑ No
   a. If yes, describe: _____
6. Representative sample: ☑ Laboratory results attached, and/or ☐ Sample provided (1/2 gallon minimum, clear container)
   a. Sample collection point/location: Chiller Building 32 Collection method: Grab
   b. Sampler's name/Co.: J Hamm / Cardinal Mallinckrodt Sample date/time: 04/05/10 0800
   c. Attach chain of custody as available
7. Discharge will occur over the following time period: ☑ < 30 days ☐ ≥ Two years ☐ Other: _____
   a. Expected total volume of wastewater to be discharged over the time period above: _____ Gallons
   b. Proposed discharge volume: 3800 Gallons, at a frequency of: ☑ One time ☐ Daily ☐ Weekly ☐ Monthly ☐ Once/three months ☐ Once/six months ☐ Other: _____
8. Pretreatment of wastewater prior to discharge: ☐ None ☑ Yes, describe: pH neutralization at main outfall 010.
   a. If yes, attach site plan, pretreatment system schematic, and design specifications.
9. Wastewater from a remediation project under: ☐ Superfund/CERCLA ☐ RCRA ☐ Voluntary program ☐ UST ☑ Not applicable
   a. If from a remediation project, briefly describe the past and present utilization of the property: _____

III.B. MATERIAL FROM UNDERGROUND STORAGE TANK SOURCE

☑ **Not applicable (go to Section IV)**

Please answer the following questions if you are requesting to discharge wastewater associated with an underground storage tank system.

1. a. Wastewater from: ☐ Inside UST(s) ☐ UST system pit ☐ Excavation outside UST system pit ☐ Monitoring well ☐ Groundwater remediation system

   b. UST project involves wastewater from: ☐ UST(s) closed in place ☐ UST(s) removed ☐ Remediation ☐ Upgrade ☐ Maintenance activities ☐ Well monitoring ☐ Other, explain: _____

   c. If wastewater is from a closure project, how long has UST(s) been out of service: _____ years

2. a. State assigned UST site identification number: _____ ☐ Not applicable

   b. Number of USTs affected: _____ ☐ Unknown

   c. For the UST(s) involved, their state identification number(s): _____ ☐ Not applicable

   d. Service Station Identification Number, as applicable: _____

3. Tank contents/former contents: ☐ Gasoline ☐ #2 diesel ☐ Used oil ☐ Unknown ☐ Other: _____

IV. DISCHARGE LOCATION

1. ☑ On-site. Describe proposed point of entry to sewer and the discharge rate (must be a sanitary or combined sewer): _____
   plant sewer to SP010 _____ Note: Range of discharge must not surcharge sewer line.

2. ☐ Haul to MSD Bissell Point Hauled Waste Receiving Station at 10 E. Grand, St. Louis, MO.

   a. Transporters Name: _____ and MSD Hauler ID Number: _____

   b. Hazardous Waste Certification:

   For wastewater which is hauled to MSD's Bissell Point Hauled Waste Receiving Station, I hereby certify that to the best of my knowledge and belief, the above hauled waste is not classified as a RCRA "hazardous waste" as defined by the MDNR in 10 CSR 25 or USEPA in 40 CFR Part 261.

   Applicant Name (print): _____

   Signature: _____ **Date:** _____

ADDITIONAL INFORMATION:

_____

V. APPLICANT SIGNATURE AND CERTIFICATION

This application must be signed by the applicant: either the source contact, or a contractor or agent directly responsible for site activities.

I hereby certify that I am directly responsible for activities at the site regarding the wastewater to be discharged, and to the best of my knowledge and belief, based on appropriate inquiry, the information in this application is true, complete, and accurate. The samples or analyses submitted are representative of the materials to be discharged. If granted approval to discharge, I agree to abide by the MSD Ordinances, and all applicable federal, state and local regulations. I agree to pay the costs of any pre-approval analyses performed by MSD and to pay any applicable disposal charges for the volume and strength of the wastes discharged.

Applicant Name (print): Lisa Meyer

Signature: Lisa Meyer **Date:** 05/04/10

FOR MSD USE ONLY:

File Name: _____ ID No. _____ Sample Point No. _____

TEKLAB, INC.

5445 HORSESHOE LAKE ROAD
COLLINSVILLE, ILLINOIS 62234

ENVIRONMENTAL TESTING LABORATORY

TEL: 618-344-1004
FAX: 618-344-1005

April 13, 2010

Lisa Meyer
Mallinckrodt, Inc.
3600 North Second Street
St. Louis, MO 63147
TEL: (314) 654-3374
FAX: (314) 654-1251

ACCREDITED IN ACCORDANCE WITH nelac

NELAP Accredited #100226

RE: Chiller Water

WorkOrder: 10040188

Dear Lisa Meyer:

TEKLAB, INC received 2 samples on 4/6/2010 3:07:00 PM for the analysis presented in the following report.

Samples are analyzed on an as received basis unless otherwise requested and documented. The sample results contained in this report relate only to the requested analytes of interest as directed on the chain of custody. IL ELAP and NELAP accredited fields of testing are indicated by the letters NELAP under the Certification column.

All quality control criteria applicable to the test methods employed for this project have been satisfactorily met and are in accordance with NELAP except where noted. The following report shall not be reproduced, except in full, without the written approval of Teklab, Inc.

If you have any questions regarding these tests results, please feel free to call.

Sincerely,

Heather A. White

Heather A. White
Project Manager
(618)344-1004 ex 20

TEKLAB, INC.

5445 HORSESHOE LAKE ROAD
COLLINSVILLE, ILLINOIS 62234

ENVIRONMENTAL TESTING LABORATORY

TEL: 618-344-1004
FAX: 618-344-1005

Client: Mallinckrodt, Inc.
Project: Chiller Water
LabOrder: 10040188
Report Date: 13-Apr-10

CASE NARRATIVE

Cooler Receipt Temp: 2.8 °C

State accreditations:

KS: NELAP #E-10347 | KY: UST #0073 | MO: DNR #00930 | AR: ADEQ #70-028-0

Qualifiers

DF - Dilution Factor	**B** - Analyte detected in the associated Method Blank	**C** - Client requested RL below PQL
RL - Reporting Limit	**J** - Analyte detected below reporting limits	**D** - Diluted out of sample
ND - Not Detected at the Reporting Limit	**R** - RPD outside accepted recovery limits	**E** - Value above quantitation range
Surr - Surrogate Standard added by lab	**S** - Spike Recovery outside accepted recovery limits	**H** - Holding time exceeded
TNTC - Too numerous to count (> 200 CFU)	**X** - Value exceeds Maximum Contaminant Level	**MI** - Matrix interference
Q - QC criteria failed or noncompliant CCV	**#** - Unknown hydrocarbon	**DNI** - Did not ignite
NELAP - IL ELAP and NELAP Accredited Field of Testing	**IDPH** - IL Dept. of Public Health	

TEKLAB, INC.

5445 HORSESHOE LAKE ROAD
COLLINSVILLE, ILLINOIS 62234

ENVIRONMENTAL TESTING LABORATORY

TEL: 618-344-1004
FAX: 618-344-1005

LABORATORY RESULTS

Client: Mallinckrodt, Inc.
WorkOrder: 10040188
Lab ID: 10040188-001
Report Date: 13-Apr-10

Client Project: Chiller Water
Client Sample ID: Chiller T
Collection Date: 4/5/2010 8:00:00 AM
Matrix: AQUEOUS

Analyses	Certification	RL	Qual	Result	Units	DF	Date Analyzed	Analyst
EPA 600 200.7, METALS BY ICP (TOTAL)								
Lithium		5.00		3860	mg/L	1	4/12/2010 3:59:00 PM	SUB
SW-846 5030, 8260B, VOLATILE ORGANIC COMPOUNDS BY GC/MS								
1,1,1,2-Tetrachloroethane	NELAP	500		ND	µg/L	100	4/6/2010 11:39:00 PM	CCF
1,1,1-Trichloroethane	NELAP	500		ND	µg/L	100	4/6/2010 11:39:00 PM	CCF
1,1,2,2-Tetrachloroethane	NELAP	500		ND	µg/L	100	4/6/2010 11:39:00 PM	CCF
1,1,2-Trichloro-1,2,2-trifluoroethane		2000		ND	µg/L	100	4/6/2010 11:39:00 PM	CCF
1,1,2-Trichloroethane	NELAP	500		ND	µg/L	100	4/6/2010 11:39:00 PM	CCF
1,1-Dichloro-2-propanone		5000		ND	µg/L	100	4/6/2010 11:39:00 PM	CCF
1,1-Dichloroethane	NELAP	500		ND	µg/L	100	4/6/2010 11:39:00 PM	CCF
1,1-Dichloroethene	NELAP	500		ND	µg/L	100	4/6/2010 11:39:00 PM	CCF
1,1-Dichloropropene	NELAP	500		ND	µg/L	100	4/6/2010 11:39:00 PM	CCF
1,2,3-Trichlorobenzene	NELAP	500		ND	µg/L	100	4/6/2010 11:39:00 PM	CCF
1,2,3-Trichloropropane	NELAP	500		ND	µg/L	100	4/6/2010 11:39:00 PM	CCF
1,2,3-Trimethylbenzene		500		ND	µg/L	100	4/6/2010 11:39:00 PM	CCF
1,2,4-Trichlorobenzene	NELAP	500		ND	µg/L	100	4/6/2010 11:39:00 PM	CCF
1,2,4-Trimethylbenzene	NELAP	500		ND	µg/L	100	4/6/2010 11:39:00 PM	CCF
1,2-Dibromo-3-chloropropane	NELAP	500		ND	µg/L	100	4/6/2010 11:39:00 PM	CCF
1,2-Dibromoethane	NELAP	500		ND	µg/L	100	4/6/2010 11:39:00 PM	CCF
1,2-Dichlorobenzene	NELAP	500		ND	µg/L	100	4/6/2010 11:39:00 PM	CCF
1,2-Dichloroethane	NELAP	500		ND	µg/L	100	4/6/2010 11:39:00 PM	CCF
1,2-Dichloropropane	NELAP	500		ND	µg/L	100	4/6/2010 11:39:00 PM	CCF
1,3,5-Trimethylbenzene	NELAP	500		ND	µg/L	100	4/6/2010 11:39:00 PM	CCF
1,3-Dichlorobenzene	NELAP	500		ND	µg/L	100	4/6/2010 11:39:00 PM	CCF
1,3-Dichloropropane	NELAP	500		ND	µg/L	100	4/6/2010 11:39:00 PM	CCF
1,4-Dichlorobenzene	NELAP	500		ND	µg/L	100	4/6/2010 11:39:00 PM	CCF
1-Chlorobutane	NELAP	500		ND	µg/L	100	4/6/2010 11:39:00 PM	CCF
2,2-Dichloropropane	NELAP	500		ND	µg/L	100	4/6/2010 11:39:00 PM	CCF
2-Butanone	NELAP	2500		ND	µg/L	100	4/6/2010 11:39:00 PM	CCF
2-Chloroethyl vinyl ether	NELAP	2000		ND	µg/L	100	4/6/2010 11:39:00 PM	CCF
2-Chlorotoluene	NELAP	500		ND	µg/L	100	4/6/2010 11:39:00 PM	CCF
2-Hexanone	NELAP	2500		ND	µg/L	100	4/6/2010 11:39:00 PM	CCF
2-Nitropropane	NELAP	5000		ND	µg/L	100	4/6/2010 11:39:00 PM	CCF
4-Chlorotoluene	NELAP	500		ND	µg/L	100	4/6/2010 11:39:00 PM	CCF
4-Methyl-2-pentanone	NELAP	2500		ND	µg/L	100	4/6/2010 11:39:00 PM	CCF
Acetone	NELAP	2500		ND	µg/L	100	4/6/2010 11:39:00 PM	CCF
Acetonitrile	NELAP	5000		ND	µg/L	100	4/6/2010 11:39:00 PM	CCF
Acrolein	NELAP	10000		ND	µg/L	100	4/6/2010 11:39:00 PM	CCF
Acrylonitrile	NELAP	500		ND	µg/L	100	4/6/2010 11:39:00 PM	CCF

TEKLAB, INC.

5445 HORSESHOE LAKE ROAD
COLLINSVILLE, ILLINOIS 62234

ENVIRONMENTAL TESTING LABORATORY

TEL: 618-344-1004
FAX: 618-344-1005

LABORATORY RESULTS

Client: Mallinckrodt, Inc.
WorkOrder: 10040188
Lab ID: 10040188-001
Report Date: 13-Apr-10

Client Project: Chiller Water
Client Sample ID: Chiller T
Collection Date: 4/5/2010 8:00:00 AM
Matrix: AQUEOUS

Analyses	Certification	RL	Qual	Result	Units	DF	Date Analyzed	Analyst
SW-846 5030, 8260B, VOLATILE ORGANIC COMPOUNDS BY GC/MS								
Allyl chloride	NELAP	500		ND	µg/L	100	4/6/2010 11:39:00 PM	CCF
Benzene	NELAP	200		ND	µg/L	100	4/6/2010 11:39:00 PM	CCF
Bromobenzene	NELAP	500		ND	µg/L	100	4/6/2010 11:39:00 PM	CCF
Bromochloromethane	NELAP	500		ND	µg/L	100	4/6/2010 11:39:00 PM	CCF
Bromodichloromethane	NELAP	500		ND	µg/L	100	4/6/2010 11:39:00 PM	CCF
Bromoform	NELAP	500		ND	µg/L	100	4/6/2010 11:39:00 PM	CCF
Bromomethane	NELAP	1000		ND	µg/L	100	4/6/2010 11:39:00 PM	CCF
Butyl acetate		2500		ND	µg/L	100	4/6/2010 11:39:00 PM	CCF
Carbon disulfide	NELAP	500		ND	µg/L	100	4/6/2010 11:39:00 PM	CCF
Carbon tetrachloride	NELAP	500		ND	µg/L	100	4/6/2010 11:39:00 PM	CCF
Chlorobenzene	NELAP	500		ND	µg/L	100	4/6/2010 11:39:00 PM	CCF
Chloroethane	NELAP	1000		ND	µg/L	100	4/6/2010 11:39:00 PM	CCF
Chloroform	NELAP	500		ND	µg/L	100	4/6/2010 11:39:00 PM	CCF
Chloromethane	NELAP	1000		ND	µg/L	100	4/6/2010 11:39:00 PM	CCF
Chloroprene	NELAP	2000		ND	µg/L	100	4/6/2010 11:39:00 PM	CCF
cis-1,2-Dichloroethene	NELAP	500		ND	µg/L	100	4/6/2010 11:39:00 PM	CCF
cis-1,3-Dichloropropene	NELAP	500		ND	µg/L	100	4/6/2010 11:39:00 PM	CCF
cis-1,4-Dichloro-2-butene	NELAP	500		ND	µg/L	100	4/6/2010 11:39:00 PM	CCF
Cyclohexanone		5000		ND	µg/L	100	4/6/2010 11:39:00 PM	CCF
Dibromochloromethane	NELAP	500		ND	µg/L	100	4/6/2010 11:39:00 PM	CCF
Dibromomethane	NELAP	500		ND	µg/L	100	4/6/2010 11:39:00 PM	CCF
Dichlorodifluoromethane	NELAP	1000		ND	µg/L	100	4/6/2010 11:39:00 PM	CCF
Ethyl acetate	NELAP	1000		ND	µg/L	100	4/6/2010 11:39:00 PM	CCF
Ethyl ether	NELAP	500		ND	µg/L	100	4/6/2010 11:39:00 PM	CCF
Ethyl methacrylate	NELAP	500		ND	µg/L	100	4/6/2010 11:39:00 PM	CCF
Ethylbenzene	NELAP	500		ND	µg/L	100	4/6/2010 11:39:00 PM	CCF
Heptane		2000		ND	µg/L	100	4/6/2010 11:39:00 PM	CCF
Hexachlorobutadiene	NELAP	500		ND	µg/L	100	4/6/2010 11:39:00 PM	CCF
Hexachloroethane	NELAP	1000		ND	µg/L	100	4/6/2010 11:39:00 PM	CCF
Iodomethane	NELAP	500		ND	µg/L	100	4/6/2010 11:39:00 PM	CCF
Isopropylbenzene	NELAP	500		ND	µg/L	100	4/6/2010 11:39:00 PM	CCF
m,p-Xylenes	NELAP	500		ND	µg/L	100	4/6/2010 11:39:00 PM	CCF
Methacrylonitrile	NELAP	1000		ND	µg/L	100	4/6/2010 11:39:00 PM	CCF
Methyl acetate		500		ND	µg/L	100	4/6/2010 11:39:00 PM	CCF
Methyl Methacrylate	NELAP	500		ND	µg/L	100	4/6/2010 11:39:00 PM	CCF
Methyl tert-butyl ether	NELAP	200		ND	µg/L	100	4/6/2010 11:39:00 PM	CCF
Methylacrylate		1000		ND	µg/L	100	4/6/2010 11:39:00 PM	CCF
Methylene chloride	NELAP	500		ND	µg/L	100	4/6/2010 11:39:00 PM	CCF

TEKLAB, INC.

5445 HORSESHOE LAKE ROAD
COLLINSVILLE, ILLINOIS 62234

ENVIRONMENTAL TESTING LABORATORY

TEL: 618-344-1004
FAX: 618-344-1005

LABORATORY RESULTS

Client: Mallinckrodt, Inc.
WorkOrder: 10040188
Lab ID: 10040188-001
Report Date: 13-Apr-10

Client Project: Chiller Water
Client Sample ID: Chiller T
Collection Date: 4/5/2010 8:00:00 AM
Matrix: AQUEOUS

Analyses	Certification	RL	Qual	Result	Units	DF	Date Analyzed	Analyst
SW-846 5030, 8260B, VOLATILE ORGANIC COMPOUNDS BY GC/MS								
Naphthalene	NELAP	1000		ND	µg/L	100	4/6/2010 11:39:00 PM	CCF
n-Butylbenzene	NELAP	500		ND	µg/L	100	4/6/2010 11:39:00 PM	CCF
n-Hexane		2000		ND	µg/L	100	4/6/2010 11:39:00 PM	CCF
Nitrobenzene	NELAP	5000		ND	µg/L	100	4/6/2010 11:39:00 PM	CCF
n-Propylbenzene	NELAP	500		ND	µg/L	100	4/6/2010 11:39:00 PM	CCF
o-Xylene	NELAP	500		ND	µg/L	100	4/6/2010 11:39:00 PM	CCF
Pentachloroethane	NELAP	2000		ND	µg/L	100	4/6/2010 11:39:00 PM	CCF
p-Isopropyltoluene	NELAP	500		ND	µg/L	100	4/6/2010 11:39:00 PM	CCF
Propionitrile	NELAP	5000		ND	µg/L	100	4/6/2010 11:39:00 PM	CCF
sec-Butylbenzene	NELAP	500		ND	µg/L	100	4/6/2010 11:39:00 PM	CCF
Styrene	NELAP	500		ND	µg/L	100	4/6/2010 11:39:00 PM	CCF
tert-Butylbenzene	NELAP	500		ND	µg/L	100	4/6/2010 11:39:00 PM	CCF
Tetrachloroethene	NELAP	500		ND	µg/L	100	4/6/2010 11:39:00 PM	CCF
Tetrahydrofuran	NELAP	2000		ND	µg/L	100	4/6/2010 11:39:00 PM	CCF
Toluene	NELAP	500		ND	µg/L	100	4/6/2010 11:39:00 PM	CCF
trans-1,2-Dichloroethene	NELAP	500		ND	µg/L	100	4/6/2010 11:39:00 PM	CCF
trans-1,3-Dichloropropene	NELAP	500		ND	µg/L	100	4/6/2010 11:39:00 PM	CCF
trans-1,4-Dichloro-2-butene	NELAP	1000		ND	µg/L	100	4/6/2010 11:39:00 PM	CCF
Trichloroethene	NELAP	500		ND	µg/L	100	4/6/2010 11:39:00 PM	CCF
Trichlorofluoromethane	NELAP	500		ND	µg/L	100	4/6/2010 11:39:00 PM	CCF
Vinyl acetate	NELAP	1000		ND	µg/L	100	4/6/2010 11:39:00 PM	CCF
Vinyl chloride	NELAP	200		ND	µg/L	100	4/6/2010 11:39:00 PM	CCF
Xylenes, Total	NELAP	500		ND	µg/L	100	4/6/2010 11:39:00 PM	CCF
Surr: 1,2-Dichloroethane-d4		74.7-129		87.8	%REC	100	4/6/2010 11:39:00 PM	CCF
Surr: 4-Bromofluorobenzene		86-119		103.6	%REC	100	4/6/2010 11:39:00 PM	CCF
Surr: Dibromofluoromethane		81.7-123		100.1	%REC	100	4/6/2010 11:39:00 PM	CCF
Surr: Toluene-d8		84.3-114		102.4	%REC	100	4/6/2010 11:39:00 PM	CCF
SW-846 8015, ETHYLENE GLYCOL BY GC/FID								
Ethylene Glycol		500		ND	mg/L	5	4/8/2010 1:34:00 PM	DMH
SW-846 9056, ANIONS BY ION CHROMATOGRAPHY (TOTAL)								
Bromide, Total		1000		59600	mg/L	1	4/12/2010 10:57:00 AM	SUB

Sample Narrative

EPA 600 200.7, Metals by ICP (Total)
Analysis performed by Keystone Laboratories, Inc.
SW-846 9056, Anions by Ion Chromatography (Total)
Analysis performed by Keystone Laboratories, Inc.
SW-846 8015, Ethylene Glycol by GC/FID
Elevated reporting limit due to matrix interference.

TEKLAB, INC.

5445 HORSESHOE LAKE ROAD
COLLINSVILLE. ILLINOIS 62234

ENVIRONMENTAL TESTING LABORATORY

TEL: 618-344-1004
FAX: 618-344-1005

LABORATORY RESULTS

Client: Mallinckrodt, Inc.
WorkOrder: 10040188
Lab ID: 10040188-001
Report Date: 13-Apr-10

Client Project: Chiller Water
Client Sample ID: Chiller T
Collection Date: 4/5/2010 8:00:00 AM
Matrix: AQUEOUS

Analyses	Certification	RL	Qual	Result	Units	DF	Date Analyzed	Analyst

SW-846 5030, 8260B, Volatile Organic Compounds by GC/MS

Elevated reporting limit due to high levels of target and/or non-target analytes.

TEKLAB, INC.

5445 HORSESHOE LAKE ROAD
COLLINSVILLE, ILLINOIS 62234

ENVIRONMENTAL TESTING LABORATORY

TEL: 618-344-1004
FAX: 618-344-1005

LABORATORY RESULTS

Client: Mallinckrodt, Inc.
WorkOrder: 10040188
Lab ID: 10040188-002
Report Date: 13-Apr-10

Client Project: Chiller Water
Client Sample ID: Chiller D
Collection Date: 4/5/2010 8:00:00 AM
Matrix: AQUEOUS

Analyses	Certification	RL	Qual	Result	Units	DF	Date Analyzed	Analyst
EPA 600 200.7, METALS BY ICP (TOTAL)								
Lithium		5.00		3240	mg/L	1	4/12/2010 3:59:00 PM	SUB
SW-846 5030, 8260B, VOLATILE ORGANIC COMPOUNDS BY GC/MS								
1,1,1,2-Tetrachloroethane	NELAP	500		ND	µg/L	100	4/7/2010 12:10:00 AM	CCF
1,1,1-Trichloroethane	NELAP	500		ND	µg/L	100	4/7/2010 12:10:00 AM	CCF
1,1,2,2-Tetrachloroethane	NELAP	500		ND	µg/L	100	4/7/2010 12:10:00 AM	CCF
1,1,2-Trichloro-1,2,2-trifluoroethane		2000		ND	µg/L	100	4/7/2010 12:10:00 AM	CCF
1,1,2-Trichloroethane	NELAP	500		ND	µg/L	100	4/7/2010 12:10:00 AM	CCF
1,1-Dichloro-2-propanone		5000		ND	µg/L	100	4/7/2010 12:10:00 AM	CCF
1,1-Dichloroethane	NELAP	500		ND	µg/L	100	4/7/2010 12:10:00 AM	CCF
1,1-Dichloroethene	NELAP	500		ND	µg/L	100	4/7/2010 12:10:00 AM	CCF
1,1-Dichloropropene	NELAP	500		ND	µg/L	100	4/7/2010 12:10:00 AM	CCF
1,2,3-Trichlorobenzene	NELAP	500		ND	µg/L	100	4/7/2010 12:10:00 AM	CCF
1,2,3-Trichloropropane	NELAP	500		ND	µg/L	100	4/7/2010 12:10:00 AM	CCF
1,2,3-Trimethylbenzene		500		ND	µg/L	100	4/7/2010 12:10:00 AM	CCF
1,2,4-Trichlorobenzene	NELAP	500		ND	µg/L	100	4/7/2010 12:10:00 AM	CCF
1,2,4-Trimethylbenzene	NELAP	500		ND	µg/L	100	4/7/2010 12:10:00 AM	CCF
1,2-Dibromo-3-chloropropane	NELAP	500		ND	µg/L	100	4/7/2010 12:10:00 AM	CCF
1,2-Dibromoethane	NELAP	500		ND	µg/L	100	4/7/2010 12:10:00 AM	CCF
1,2-Dichlorobenzene	NELAP	500		ND	µg/L	100	4/7/2010 12:10:00 AM	CCF
1,2-Dichloroethane	NELAP	500		ND	µg/L	100	4/7/2010 12:10:00 AM	CCF
1,2-Dichloropropane	NELAP	500		ND	µg/L	100	4/7/2010 12:10:00 AM	CCF
1,3,5-Trimethylbenzene	NELAP	500		ND	µg/L	100	4/7/2010 12:10:00 AM	CCF
1,3-Dichlorobenzene	NELAP	500		ND	µg/L	100	4/7/2010 12:10:00 AM	CCF
1,3-Dichloropropane	NELAP	500		ND	µg/L	100	4/7/2010 12:10:00 AM	CCF
1,4-Dichlorobenzene	NELAP	500		ND	µg/L	100	4/7/2010 12:10:00 AM	CCF
1-Chlorobutane	NELAP	500		ND	µg/L	100	4/7/2010 12:10:00 AM	CCF
2,2-Dichloropropane	NELAP	500		ND	µg/L	100	4/7/2010 12:10:00 AM	CCF
2-Butanone	NELAP	2500		ND	µg/L	100	4/7/2010 12:10:00 AM	CCF
2-Chloroethyl vinyl ether	NELAP	2000		ND	µg/L	100	4/7/2010 12:10:00 AM	CCF
2-Chlorotoluene	NELAP	500		ND	µg/L	100	4/7/2010 12:10:00 AM	CCF
2-Hexanone	NELAP	2500		ND	µg/L	100	4/7/2010 12:10:00 AM	CCF
2-Nitropropane	NELAP	5000		ND	µg/L	100	4/7/2010 12:10:00 AM	CCF
4-Chlorotoluene	NELAP	500		ND	µg/L	100	4/7/2010 12:10:00 AM	CCF
4-Methyl-2-pentanone	NELAP	2500		ND	µg/L	100	4/7/2010 12:10:00 AM	CCF
Acetone	NELAP	2500		ND	µg/L	100	4/7/2010 12:10:00 AM	CCF
Acetonitrile	NELAP	5000		ND	µg/L	100	4/7/2010 12:10:00 AM	CCF
Acrolein	NELAP	10000		ND	µg/L	100	4/7/2010 12:10:00 AM	CCF
Acrylonitrile	NELAP	500		ND	µg/L	100	4/7/2010 12:10:00 AM	CCF

TEKLAB, INC.

5445 HORSESHOE LAKE ROAD
COLLINSVILLE, ILLINOIS 62234

ENVIRONMENTAL TESTING LABORATORY

TEL: 618-344-1004
FAX: 618-344-1005

LABORATORY RESULTS

Client: Mallinckrodt, Inc.
WorkOrder: 10040188
Lab ID: 10040188-002
Report Date: 13-Apr-10

Client Project: Chiller Water
Client Sample ID: Chiller D
Collection Date: 4/5/2010 8:00:00 AM
Matrix: AQUEOUS

Analyses	Certification	RL	Qual	Result	Units	DF	Date Analyzed	Analyst
SW-846 5030, 8260B, VOLATILE ORGANIC COMPOUNDS BY GC/MS								
Allyl chloride	NELAP	500		ND	µg/L	100	4/7/2010 12:10:00 AM	CCF
Benzene	NELAP	200		ND	µg/L	100	4/7/2010 12:10:00 AM	CCF
Bromobenzene	NELAP	500		ND	µg/L	100	4/7/2010 12:10:00 AM	CCF
Bromochloromethane	NELAP	500		ND	µg/L	100	4/7/2010 12:10:00 AM	CCF
Bromodichloromethane	NELAP	500		ND	µg/L	100	4/7/2010 12:10:00 AM	CCF
Bromoform	NELAP	500		ND	µg/L	100	4/7/2010 12:10:00 AM	CCF
Bromomethane	NELAP	1000		ND	µg/L	100	4/7/2010 12:10:00 AM	CCF
Butyl acetate		2500		ND	µg/L	100	4/7/2010 12:10:00 AM	CCF
Carbon disulfide	NELAP	500		ND	µg/L	100	4/7/2010 12:10:00 AM	CCF
Carbon tetrachloride	NELAP	500		ND	µg/L	100	4/7/2010 12:10:00 AM	CCF
Chlorobenzene	NELAP	500		ND	µg/L	100	4/7/2010 12:10:00 AM	CCF
Chloroethane	NELAP	1000		ND	µg/L	100	4/7/2010 12:10:00 AM	CCF
Chloroform	NELAP	500		ND	µg/L	100	4/7/2010 12:10:00 AM	CCF
Chloromethane	NELAP	1000		ND	µg/L	100	4/7/2010 12:10:00 AM	CCF
Chloroprene	NELAP	2000		ND	µg/L	100	4/7/2010 12:10:00 AM	CCF
cis-1,2-Dichloroethene	NELAP	500		ND	µg/L	100	4/7/2010 12:10:00 AM	CCF
cis-1,3-Dichloropropene	NELAP	500		ND	µg/L	100	4/7/2010 12:10:00 AM	CCF
cis-1,4-Dichloro-2-butene	NELAP	500		ND	µg/L	100	4/7/2010 12:10:00 AM	CCF
Cyclohexanone		5000		ND	µg/L	100	4/7/2010 12:10:00 AM	CCF
Dibromochloromethane	NELAP	500		ND	µg/L	100	4/7/2010 12:10:00 AM	CCF
Dibromomethane	NELAP	500		ND	µg/L	100	4/7/2010 12:10:00 AM	CCF
Dichlorodifluoromethane	NELAP	1000		ND	µg/L	100	4/7/2010 12:10:00 AM	CCF
Ethyl acetate	NELAP	1000		ND	µg/L	100	4/7/2010 12:10:00 AM	CCF
Ethyl ether	NELAP	500		ND	µg/L	100	4/7/2010 12:10:00 AM	CCF
Ethyl methacrylate	NELAP	500		ND	µg/L	100	4/7/2010 12:10:00 AM	CCF
Ethylbenzene	NELAP	500		ND	µg/L	100	4/7/2010 12:10:00 AM	CCF
Heptane		2000		ND	µg/L	100	4/7/2010 12:10:00 AM	CCF
Hexachlorobutadiene	NELAP	500		ND	µg/L	100	4/7/2010 12:10:00 AM	CCF
Hexachloroethane	NELAP	1000		ND	µg/L	100	4/7/2010 12:10:00 AM	CCF
Iodomethane	NELAP	500		ND	µg/L	100	4/7/2010 12:10:00 AM	CCF
Isopropylbenzene	NELAP	500		ND	µg/L	100	4/7/2010 12:10:00 AM	CCF
m,p-Xylenes	NELAP	500		ND	µg/L	100	4/7/2010 12:10:00 AM	CCF
Methacrylonitrile	NELAP	1000		ND	µg/L	100	4/7/2010 12:10:00 AM	CCF
Methyl acetate		500		ND	µg/L	100	4/7/2010 12:10:00 AM	CCF
Methyl Methacrylate	NELAP	500		ND	µg/L	100	4/7/2010 12:10:00 AM	CCF
Methyl tert-butyl ether	NELAP	200		ND	µg/L	100	4/7/2010 12:10:00 AM	CCF
Methylacrylate		1000		ND	µg/L	100	4/7/2010 12:10:00 AM	CCF
Methylene chloride	NELAP	500		ND	µg/L	100	4/7/2010 12:10:00 AM	CCF

TEKLAB, INC.

5445 HORSESHOE LAKE ROAD
COLLINSVILLE, ILLINOIS 62234

ENVIRONMENTAL TESTING LABORATORY

TEL: 618-344-1004
FAX: 618-344-1005

LABORATORY RESULTS

Client: Mallinckrodt, Inc.
WorkOrder: 10040188
Lab ID: 10040188-002
Report Date: 13-Apr-10

Client Project: Chiller Water
Client Sample ID: Chiller D
Collection Date: 4/5/2010 8:00:00 AM
Matrix: AQUEOUS

Analyses	Certification	RL	Qual	Result	Units	DF	Date Analyzed	Analyst
SW-846 5030, 8260B, VOLATILE ORGANIC COMPOUNDS BY GC/MS								
Naphthalene	NELAP	1000		ND	µg/L	100	4/7/2010 12:10:00 AM	CCF
n-Butylbenzene	NELAP	500		ND	µg/L	100	4/7/2010 12:10:00 AM	CCF
n-Hexane		2000		ND	µg/L	100	4/7/2010 12:10:00 AM	CCF
Nitrobenzene	NELAP	5000		ND	µg/L	100	4/7/2010 12:10:00 AM	CCF
n-Propylbenzene	NELAP	500		ND	µg/L	100	4/7/2010 12:10:00 AM	CCF
o-Xylene	NELAP	500		ND	µg/L	100	4/7/2010 12:10:00 AM	CCF
Pentachloroethane	NELAP	2000		ND	µg/L	100	4/7/2010 12:10:00 AM	CCF
p-Isopropyltoluene	NELAP	500		ND	µg/L	100	4/7/2010 12:10:00 AM	CCF
Propionitrile	NELAP	5000		ND	µg/L	100	4/7/2010 12:10:00 AM	CCF
sec-Butylbenzene	NELAP	500		ND	µg/L	100	4/7/2010 12:10:00 AM	CCF
Styrene	NELAP	500		ND	µg/L	100	4/7/2010 12:10:00 AM	CCF
tert-Butylbenzene	NELAP	500		ND	µg/L	100	4/7/2010 12:10:00 AM	CCF
Tetrachloroethene	NELAP	500		ND	µg/L	100	4/7/2010 12:10:00 AM	CCF
Tetrahydrofuran	NELAP	2000		ND	µg/L	100	4/7/2010 12:10:00 AM	CCF
Toluene	NELAP	500		ND	µg/L	100	4/7/2010 12:10:00 AM	CCF
trans-1,2-Dichloroethene	NELAP	500		ND	µg/L	100	4/7/2010 12:10:00 AM	CCF
trans-1,3-Dichloropropene	NELAP	500		ND	µg/L	100	4/7/2010 12:10:00 AM	CCF
trans-1,4-Dichloro-2-butene	NELAP	1000		ND	µg/L	100	4/7/2010 12:10:00 AM	CCF
Trichloroethene	NELAP	500		ND	µg/L	100	4/7/2010 12:10:00 AM	CCF
Trichlorofluoromethane	NELAP	500		ND	µg/L	100	4/7/2010 12:10:00 AM	CCF
Vinyl acetate	NELAP	1000		ND	µg/L	100	4/7/2010 12:10:00 AM	CCF
Vinyl chloride	NELAP	200		ND	µg/L	100	4/7/2010 12:10:00 AM	CCF
Xylenes, Total	NELAP	500		ND	µg/L	100	4/7/2010 12:10:00 AM	CCF
Surr: 1,2-Dichloroethane-d4		74.7-129		90.6	%REC	100	4/7/2010 12:10:00 AM	CCF
Surr: 4-Bromofluorobenzene		86-119		104.6	%REC	100	4/7/2010 12:10:00 AM	CCF
Surr: Dibromofluoromethane		81.7-123		98.4	%REC	100	4/7/2010 12:10:00 AM	CCF
Surr: Toluene-d8		84.3-114		100.1	%REC	100	4/7/2010 12:10:00 AM	CCF
SW-846 8015, ETHYLENE GLYCOL BY GC/FID								
Ethylene Glycol		500		ND	mg/L	5	4/8/2010 1:44:00 PM	DMH
SW-846 9056, ANIONS BY ION CHROMATOGRAPHY (TOTAL)								
Bromide, Total		1000		49700	mg/L	1	4/12/2010 11:11:00 AM	SUB

Sample Narrative

EPA 600 200.7, Metals by ICP (Total)
Analysis performed by Keystone Laboratories, Inc.
SW-846 9056, Anions by Ion Chromatography (Total)
Analysis performed by Keystone Laboratories, Inc.
SW-846 8015, Ethylene Glycol by GC/FID
Elevated reporting limit due to matrix interference.

TEKLAB, INC.

5445 HORSESHOE LAKE ROAD
COLLINSVILLE, ILLINOIS 62234

ENVIRONMENTAL TESTING LABORATORY

TEL: 618-344-1004
FAX: 618-344-1005

LABORATORY RESULTS

Client: Mallinckrodt, Inc.
WorkOrder: 10040188
Lab ID: 10040188-002
Report Date: 13-Apr-10

Client Project: Chiller Water
Client Sample ID: Chiller D
Collection Date: 4/5/2010 8:00:00 AM
Matrix: AQUEOUS

Analyses	Certification	RL	Qual	Result	Units	DF	Date Analyzed	Analyst

SW-846 5030, 8260B, Volatile Organic Compounds by GC/MS

Elevated reporting limit due to high levels of target and/or non-target analytes.

TEKLAB, INC.

5445 HORSESHOE LAKE ROAD
COLLINSVILLE, ILLINOIS 62234

ENVIRONMENTAL TESTING LABORATORY

TEL: 618-344-1004
FAX: 618-344-1005

RECEIVING CHECK LIST

Client: Mallinckrodt, Inc.
Project: Chiller Water
Lab Order: 10040188
Report Date: 13-Apr-10

Carrier: Terry Hattan

Received By: DB

Completed by: Dawn Brantley
On: 06-Apr-10

Reviewed by: Heather A. White
On: 07-Apr-10

Pages to follow: Chain of custody 1 Extra pages included 0

Shipping container/cooler in good condition?	Yes ☑	No ☐	Not Present ☐	Temp °C 2.8
Type of thermal preservation?	None ☐	Ice ☑	Blue Ice ☐	Dry Ice ☐
Chain of custody present?	Yes ☑	No ☐		
Chain of custody signed when relinquished and received?	Yes ☑	No ☐		
Chain of custody agrees with sample labels?	Yes ☑	No ☐		
Samples in proper container/bottle?	Yes ☑	No ☐		
Sample containers intact?	Yes ☑	No ☐		
Sufficient sample volume for indicated test?	Yes ☑	No ☐		
All samples received within holding time?	Yes ☑	No ☐		
Reported field parameters measured:	Field ☐	Lab ☐	NA ☑	
Container/Temp Blank temperature in compliance?	Yes ☑	No ☐		
When thermal preservation is required, samples are compliant with a temperature between 0.1°C - 6.0°C, or when samples are received on ice the same day as collected.				
Water - VOA vials have zero headspace?	Yes ☐	No ☑	No VOA vials ☐	
Water - TOX containers have zero headspace?	Yes ☐	No ☐	No TOX containers ☑	
Water - pH acceptable upon receipt?	Yes ☐	No ☑		

Any No responses must be detailed below or on the COC.

A significant amount of headspace was present in the volatile vials. Continue with analysis per client request.

Samples were preserved with nitric acid for lithium and bromide upon arrival at the laboratory. EAH 4/8/10

CHAIN OF CUSTODY

pg. ____ of ____ Work Order # 100 40188

TEKLAB, INC. 5445 Horseshoe Lake Road ~ Collinsville, IL 62234 ~ Phone: (618) 344-1004 ~ Fax: (618) 344-1005

Client: Mallinckrodt
Address: 3600 N 2nd St
City / State / Zip: St Louis MO 63147
Contact: Lisa Meyer Phone: 314 654 3374
E-Mail: Fax:

Samples on: ☒ Ice ☐ Blue Ice ☐ No Ice 2-8 °C
Preserved in: ☐ Lab ☐ Field FOR LAB USE ONLY
Lab Notes: 5.0 headspace all Hcl's and waters D samples
Comments: If headspace, continue processing

- Are these samples known to be involved in litigation? If yes, a surcharge will apply. ☐ Yes ☒ No
- Are these samples known to be hazardous? ☐ Yes ☒ No
- Are there any required reporting limits to be met on the requested analysis? If yes, please provide limits in comment section. ☐ Yes ☒ No

Project Name / Number: Chiller Water
Sample Collector's Name: LM
Results Requested: ☐ Standard ☒ 1-2 Day (100% Surcharge) ☐ Other _____ ☒ 3 Day (50% Surcharge)
Billing Instructions:

Lab Use Only	Sample Identification	Date/Time Sampled	UNPRES	HNO_3	NaOH	H_2SO_4	HCL	MeOH	$NaHSO_4$	Other	Water	Drinking Water	Soil	Sludge	Sp. Waste	8260	Ethylene glycol	Lithium bromide									
100 40188 -001	Chiller T	4/5/10 0800	3				2				X					X	X	X									
002	Chiller D	4/5/10 0800	3				2				X					X	X	X									

Teklab, Inc.
Courier Pick Up

3 DAY

Relinquished By	Date / Time	Received By	Date / Time
Lisa Meyer	04/06/10 1435	[signature]	4/6/10 1435
[signature]	4/6/10 1507	[signature]	4/6/10 1507

The individual signing this agreement on behalf of client acknowledges that he/she has read and understands the terms and conditions of this agreement, on the reverse side, and that he/she has the authority to sign on behalf of client.

WHITE & YELLOW – LAB PINK – SAMPLER'S COPY

TEKLAB, INC.

5445 HORSESHOE LAKE ROAD
COLLINSVILLE, ILLINOIS 62234

ENVIRONMENTAL TESTING LABORATORY

TEL: 618-344-1004
FAX: 618-344-1005

May 07, 2010

Lisa Meyer
Mallinckrodt Inc.
3600 N. 2nd St.
St. Louis, MO 63147
TEL: (314) 654-3374
FAX: (314) 654-1251

ACCREDITED IN ACCORDANCE WITH

NELAP Accredited #100226

RE: Chiller Water

WorkOrder: 10050274

Dear Lisa Meyer:

TEKLAB, INC received 2 samples on 5/6/2010 2:33:00 PM for the analysis presented in the following report.

Samples are analyzed on an as received basis unless otherwise requested and documented. The sample results contained in this report relate only to the requested analytes of interest as directed on the chain of custody. IL ELAP and NELAP accredited fields of testing are indicated by the letters NELAP under the Certification column.

All quality control criteria applicable to the test methods employed for this project have been satisfactorily met and are in accordance with NELAP except where noted. The following report shall not be reproduced, except in full, without the written approval of Teklab, Inc.

If you have any questions regarding these tests results, please feel free to call.

Sincerely,

Heather A. White

Heather A. White
Project Manager
(618)344-1004 ex 20

TEKLAB, INC.

5445 HORSESHOE LAKE ROAD
COLLINSVILLE, ILLINOIS 62234

ENVIRONMENTAL TESTING LABORATORY

TEL: 618-344-1004
FAX: 618-344-1005

Client: Mallinckrodt Inc.
Project: Chiller Water
LabOrder: 10050274
Report Date: 07-May-10

CASE NARRATIVE

Cooler Receipt Temp: 0.8 °C

State accreditations:

KS: NELAP #E-10347 | KY: UST #0073 | MO: DNR #00930 | AR: ADEQ #70-028-0

Qualifiers

DF - Dilution Factor	**B** - Analyte detected in the associated Method Blank	**C** - Client requested RL below PQL
RL - Reporting Limit	**J** - Analyte detected below reporting limits	**D** - Diluted out of sample
ND - Not Detected at the Reporting Limit	**R** - RPD outside accepted recovery limits	**E** - Value above quantitation range
Surr - Surrogate Standard added by lab	**S** - Spike Recovery outside accepted recovery limits	**H** - Holding time exceeded
TNTC - Too numerous to count (> 200 CFU)	**X** - Value exceeds Maximum Contaminant Level	**MI** - Matrix interference
Q - QC criteria failed or noncompliant CCV	**#** - Unknown hydrocarbon	**DNI** - Did not ignite
NELAP - IL ELAP and NELAP Accredited Field of Testing	**IDPH** - IL Dept. of Public Health	

TEKLAB, INC.

5445 HORSESHOE LAKE ROAD
COLLINSVILLE, ILLINOIS 62234

ENVIRONMENTAL TESTING LABORATORY

TEL: 618-344-1004
FAX: 618-344-1005

LABORATORY RESULTS

Client: Mallinckrodt Inc.
WorkOrder: 10050274
Lab ID: 10050274-001
Report Date: 07-May-10

Client Project: Chiller Water
Client Sample ID: Chiller D
Collection Date: 5/6/2010 9:35:00 AM
Matrix: AQUEOUS

Analyses	Certification	RL	Qual	Result	Units	DF	Date Analyzed	Analyst
EPA 600 410.4								
Chemical Oxygen Demand	NELAP	1000		**10300**	mg/L	20	5/7/2010 11:00:00 AM	BSJ
STANDARD METHODS 18TH ED. 2540 D								
Total Suspended Solids	NELAP	6		**59**	mg/L	1	5/6/2010 5:15:00 PM	JMT

Sample Narrative

TEKLAB, INC.

5445 HORSESHOE LAKE ROAD
COLLINSVILLE, ILLINOIS 62234

ENVIRONMENTAL TESTING LABORATORY

TEL: 618-344-1004
FAX: 618-344-1005

LABORATORY RESULTS

Client: Mallinckrodt Inc.
WorkOrder: 10050274
Lab ID: 10050274-002
Report Date: 07-May-10

Client Project: Chiller Water
Client Sample ID: Chiller T
Collection Date: 5/6/2010 9:40:00 AM
Matrix: AQUEOUS

Analyses	Certification	RL	Qual	Result	Units	DF	Date Analyzed	Analyst
EPA 600 410.4								
Chemical Oxygen Demand	NELAP	1000		**12000**	mg/L	20	5/7/2010 11:00:00 AM	BSJ
STANDARD METHODS 18TH ED. 2540 D								
Total Suspended Solids	NELAP	6		**71**	mg/L	1	5/6/2010 5:15:00 PM	JMT

Sample Narrative

TEKLAB, INC.

5445 HORSESHOE LAKE ROAD
COLLINSVILLE, ILLINOIS 62234

ENVIRONMENTAL TESTING LABORATORY

TEL: 618-344-1004
FAX: 618-344-1005

RECEIVING CHECK LIST

Client: Mallinckrodt Inc.
Project: Chiller Water
Lab Order: 10050274
Report Date: 07-May-10

Carrier: Terry Hattan

Received By: MLD

Completed by: Marvin L. Darling II
On: 06-May-10
Marvin L. Darling

Reviewed by: Elizabeth A. Hurley
On: 06-May-10
Elizabeth A. Hurley

Pages to follow: Chain of custody 1 Extra pages included 0

Shipping container/cooler in good condition?	Yes ☑	No ☐	Not Present ☐	Temp °C 0.8
Type of thermal preservation?	None ☐	Ice ☑	Blue Ice ☐	Dry Ice ☐
Chain of custody present?	Yes ☑	No ☐		
Chain of custody signed when relinquished and received?	Yes ☑	No ☐		
Chain of custody agrees with sample labels?	Yes ☑	No ☐		
Samples in proper container/bottle?	Yes ☑	No ☐		
Sample containers intact?	Yes ☑	No ☐		
Sufficient sample volume for indicated test?	Yes ☑	No ☐		
All samples received within holding time?	Yes ☑	No ☐		
Reported field parameters measured:	Field ☐	Lab ☐	NA ☑	
Container/Temp Blank temperature in compliance?	Yes ☑	No ☐		

When thermal preservation is required, samples are compliant with a temperature between 0.1°C - 6.0°C, or when samples are received on ice the same day as collected.

Water - VOA vials have zero headspace?	Yes ☐	No ☐	No VOA vials	☑
Water - TOX containers have zero headspace?	Yes ☐	No ☐	No TOX containers	☑
Water - pH acceptable upon receipt?	Yes ☑	No ☐		

Any No responses must be detailed below or on the COC.

CHAIN OF CUSTODY

pg. ____ of ____ Work Order # 1005 0274

TEKLAB, INC. 5445 Horseshoe Lake Road ~ Collinsville, IL 62234 ~ Phone: (618) 344-1004 ~ Fax: (618) 344-1005

Client: Mallinckrodt
Address: 3600 N 2nd St
City / State / Zip: St Louis MO 63119
Contact: Lisa Meyer Phone: 314 654 3374
E-Mail: Fax:

Samples on: ☒ Ice ☐ Blue Ice ☐ No Ice 0.8 °C
Preserved in: ☐ Lab ☒ Field
FOR LAB USE ONLY
Lab Notes: MLDL 1244 5/6/10

Comments: 1 DAY Teklab, Inc. Courier Pick Up

- Are these samples known to be involved in litigation? If yes, a surcharge will apply. ☐ Yes ☒ No
- Are these samples known to be hazardous? ☐ Yes ☒ No
- Are there any required reporting limits to be met on the requested analysis? If yes, please provide limits in comment section. ☐ Yes ☒ No

Project Name / Number: Chiller Water
Sample Collector's Name:
Results Requested: ☐ Standard ☒ 1-2 Day (100% Surcharge) ☐ Other_____ ☐ 3 Day (50% Surcharge)
Billing Instructions:

Lab Use Only	Sample Identification	Date/Time Sampled	# and Type of Containers: UNPRES	HNO_3	NaOH	H_2SO_4	HCL	MeOH	$NaHSO_4$	Other	MATRIX: Water	Drinking Water	Soil	Sludge	Sp. Waste	INDICATE ANALYSIS REQUESTED: COD	TSS
1005 0274-01	Chiller D	05/06/10 0935	1			1					X					X	X
-02	Chiller T	05/06/10 0940	1			1					X					X	X

Relinquished By	Date / Time	Received By	Date / Time
Lisa Meyer	5/6/10 1310	[signature]	5/6/10 1310
[signature]	5/6/10 1433	Anthony L. Dowling II	5/6/10 1433

The individual signing this agreement on behalf of client acknowledges that he/she has read and understands the terms and conditions of this agreement, on the reverse side, and that he/she has the authority to sign on behalf of client.

WHITE & YELLOW – LAB PINK – SAMPLER'S COPY

MSD 011803

Metropolitan St. Louis Sewer District

Division of Environmental Compliance
10 East Grand Avenue
St. Louis, MO 63147-2913
Phone: 314.768.6200 www.stlmsd.com

May 10, 2010

Lisa Meyer
HS&E Engineer
MALLINCKRODT INC.
3600 North Second Street
St. Louis, MO 63147

RE: NOTICE OF VIOLATION – WASTEWATER DISCHARGE PERMIT NO. 2112059600
For premise at: 3600 North Second Street, 63147

Dear Ms. Meyer:

We have reviewed the first quarter 2010 self-monitoring report, required under the permit referenced above, that you recently submitted to MSD. As you already know, the following violations of permit requirements were identified:

I. VIOLATION OF PERMIT MONITORING REQUIREMENTS:

At Sample Point 905, collected on February 3, 2010, results for the organics listed under 40 CFR 414 were non-detectable, but exceeded both the daily maximum and monthly average limits.
At Sample Point 915, collected on January 11, 2010, results for diethyl amine and triethyl amine were non-detectable, but exceeded both the daily maximum and monthly average limits.

II. REQUIRED ACTION/RESPONSE:

We understand that the violations listed above were a result of sample characteristics which caused instrument interference and elevated detection limits.

1. Submit additional sampling results to MSD. Sample collection must occur as follows:
   a. Collect grab samples for the full list of organics at SP 905 (therefore, two sets are required for the second quarter report).
   b. Collect grab samples for diethyl amine and triethyl amine at SP 915 (these are once per year requirements; a violation can be avoided if results are acceptable).

2. Please submit the results with your second quarter self-monitoring report.

Thank you for helping us to comply with state and federal regulations. If you have any questions, please contact me at 314.436.8756.

Sincerely,
METROPOLITAN ST. LOUIS SEWER DISTRICT

SM Rehmer

Scott Rehmer
Assistant Engineer

COVIDIEN

Facsimile Communication

To: Mr. Steve Grace
Company: MSD Environmental Compliance
Fax Number: 314.436.8766
Date: May 5, 2010

Number of Pages *(including cover sheet)*: 1

Health, Safety, Environmental

Lisa Meyer
Senior HSE Engineer

Covidien/Mallinckrodt
3600 N. Second St.
St. Louis, Missouri 63147

Telephone 314-654-3374
Facsimile 314-654-1251

x For your information
☐ Please respond
☐ Urgent
☐ Confidential

Comments:

Dear Mr. Grace,

Due to the unanticipated additional need for the Boilerhouse rental chiller unit, the Special Discharge permit we were granted per your letter dated April 6, 2010 will no longer be required. This letter is therefore being submitted to void and close this Special Discharge permit. If you have any questions or need additional information, please contact me.

Thank you,

Lisa Meyer

Metropolitan St. Louis Sewer District

Division of Environmental Compliance
10 East Grand Avenue
St. Louis, MO 63147-2913
Phone: 314.768.6200 www.stlmsd.com

May 4, 2010

Lisa Meyer
MALLINCKRODT
3600 North Second St.
St. Louis, MO 63147

Dear Ms. Meyer:

We have reviewed your application dated May 4, 2010 requesting approval to discharge 2,100 gallons of wastewater to the Metropolitan St. Louis Sewer District for treatment. This wastewater is 10% ethylene glycol solution at the building 250 Mallinckrodt facility located at 3600 North Second Street, St. Louis, Missouri. We understand that the wastewater will be discharged through sampling point 010.

Based on the information you provided, this wastewater meets MSD Ordinance 12559 standards and is approved for discharge into a sanitary or combined sewer on site. Due to the high ethylene glycol concentration, the discharge is limited to 1,680 gallons per hour. This approval is valid for 30 days from the date of this letter.

You must be certain the waste is discharged into a sanitary or combined sewer inlet only. This letter does not authorize any discharge to a separate storm sewer, or to any watercourse, as any such discharge would be in violation of state and federal laws. **Please notify me at the number below when the discharge is to commence, and please ensure the onsite personnel discharging the wastewater in question are provided with a copy of this letter.**

For billing purposes associated with this high COD wastewater, you must confirm the volume of this wastewater discharged to us, in writing, at the completion of the discharge. This report is due no later than 28 days after this approval expires. Please refer to this letter and include the date of the discharge when providing that figure. Under the provisions of Ordinance 13021, you will be billed by invoice at the billing rate in effect at the time of discharge. The current rates contained in MSD Ordinance 13021, is $1.92 per hundred cubic feet ($2.57 per thousand gallons) and $275.76 per ton for COD over 600 mg/L. Using the assumed COD concentration based on the percent of ethylene glycol contained in the wastewater in question, and the proposed discharge volume provided in your application, it is estimated that you will be discharging approximately one ton of COD over 600 mg/L. (Our quantitative estimate is 0.88 tons COD times $275.76.) Please do not pay this amount until you receive our invoice.

This discharge has been approved based upon the information and sample analysis you provided, and is subject to the conditions stated above. This approval may be revoked by the District at any time if any of the information is found to be incorrect, or if the conditions of this approval are violated. Also, if the discharge causes any operational or maintenance problem within the District's collection or treatment system, or results in violations of any conditions of the District's NPDES permit, Mallinckrodt will be considered responsible for damages.

If you have any questions, please call me at (314) 436-8755.

Sincerely,
METROPOLITAN ST. LOUIS SEWER DISTRICT

Steven M. Grace

Steve Grace
Environmental Assistant Engineer

bv
pc: Nora Estopare
File: IU, MALLINCKRODT INC [2112059600]

C1A

SD EVALUATION CHECKLIST - ON SITE

APPLICATION INFORMATION

Source Name: Mallinckrodt Inc.

Premise Address: 3600 N. 2nd St

Send approval letter to applicant

Evaluated by: SMG MCE 5/5/2010

Date: 5/4/10

Application Dated: 5/4/10 Received: 5/4/10 All Requested Info. Received: 5/4/10

SOURCE FILING/DESCRIPTION

1 - Source in PIMS? (Y) / N
2 - If No, on IU Cross-Ref list? * Y / N
3 - If No, MSD Account # from E-CIS? Y / N
4 - If none, on "Source" list (pre-IMS)? ** Y / N
5 - If No, assigned SOUR# from PIMS.

* o:\costrecovery\cross reference xls file

** o:\costrecovery\sourlist xls file

SOURCE TYPE (circle): (IU) / Dead IU / SD

INDUSTRY ID: 21120596-00

Sample Point: No. Assigned: 815 Description: 10% ethylene glycol solution from Bldg. 250 chiller system

Normal WW flow from premise? N/A _____ ccf/month, 2,992,101 GPD, _____ GPH. from SP010

REGULATORY STATUS

Is waste a Hazardous Waste? (N) / Y

Categorical standards apply? (N) / Y

Contain PCB/ asbestos/ radioactive/ dioxin/ used oil? (N) / Y

Regulatory Agency Oversight? (N) / Y

DISCHARGE CONSIDERATIONS At MSD's connection:

Ordinance Limits (12559, p32) exceeded? (N) / Y

Ordinance other limits exceeded (dye, flash pt <140F, temp >140F, obstruction, nuisance foaming/odor, corrosion causing): (N) / Y

Water Quality Standard exceeded? (N) / Y

Fumes in sewer exceed PEL/TLV limits? (N) / Y

Vapors in sewer exceed 10% of LEL? (N) / Y

RECOMMENDATION: (APPROVE) / DENY (cc WWTP Mgr for timed discharge)

APPROVAL CONDITIONS:

Timed Discharge (COD/BOD/WQ/foam): N / (Y) Limit = 1,680 gal/hour

Require Treatment before Discharge? (N) / Y

Laboratory analysis fee due? (N) / Y $_____

SMR required? (N) / Y Frequency/analysis: _____

SMR log: (N/A) / Remediation.xls / Nonremediation.xls

Volume Billing applies (water unmetered or credited)? (N) / Y

Bill High Strength? N / (Y) Yes, If use >60,000 gal/month water ✓ and, > norm WW strgth

Surcharge calculation attached: N/A / N / (Y)

Expiration log updated: (N/A) / N / Y

O:\CostRecovery\Special Discharge\C1a.Checklist.doc

On-Site Special Discharge High Strength Flow Rate and Surcharge Calculator

1 GENERAL INFORMATION:

Date: 05/04/10
Calculated by: Steve Grace
Source name: Mallinckrodt Inc.
Waste material: Used ethylene glycol 10% solution from building 250 chiller system
Discharge volume: 2,100 gallons

2 STRENGTH INFORMATION:

Sample BOD =	0	mg/l =	0	lbs BOD to be discharged
Sample COD =	100,000	mg/l =	1751	lbs COD to be discharged
Sample TSS =	0	mg/l =	for surcharge calculation only	

3 PLANT DATA: 2010

Treatment area: Bissell

	Flow (MGD)	BOD (mg/L)	COD (mg/L)	BOD (lb/hr)	COD (lb/hr)	Max Loading = 10% BOD (lb/hr)	COD (lb/hr)
Bissell	**140**	**146**	**292**	**7,113**	**14,227**	**711**	**1,423**
Coldwater	26	188	377	1,704	3,408	170	341
Fenton	5	388	776	679	1,357	68	136
Grand Glaize	16	129	405	708	2,218	71	222
Lemay	131	78	210	3,531	9,584	353	958
Lower Meramec	13	124	409	543	1,785	54	179
Missouri River	27	280	559	2,671	5,341	267	534

4 MINIMUM REQUIRED FLOW RATE:

	BOD (hours	BOD (gpm)	COD (hours)	COD (gpm)
Bissell	**0.00**	**0**	**1.23**	**28**
Coldwater	0.00	0	5.14	7
Fenton	0.00	0	12.90	3
Grand Glaize	0.00	0	7.90	4
Lemay	0.00	0	1.83	19
Lower Meramec	0.00	0	9.81	4
Missouri River	0.00	0	3.28	11

5 SURCHARGE AND VOLUME BILLING

Is volume subject to billing? no (yes/no)
Ratio of BOD/COD = 0.00

(Sample BOD) - 300 = 0 mg/l subject to surcharge
(sample COD) - 600 = 99400 mg/l subject to surcharge
(sample TSS) - 300 = 0 mg/l subject to surcharge

If BOD/COD ratio <= 0.35, the following calculations use the COD value. Otherwise they use the BOD value

Current rates under Ordinance: 12754

Volume =	$ 1.92	/CcF
BOD =	$ 551.52	/ton
COD =	$ 275.76	/ton
TSS =	$ 218.90	/ton

Flow charge = $ - based on volume = 2.8 CcF
BOD surcharge = $ -
COD surcharge = $ 240.10
TSS surcharge = $ -
Total discharge charge = $ 240.10
Customer charge = $ 240.10 DEC charges special discharge customers for total charges > $20.00
Approximate charge/gallon = $ 0.11

Comments

require volume report for billing purposes.

COVIDIEN

Facsimile Communication

To: Mr. Steve Grace

Company: MSD Environmental Compliance

Fax Number: 314.436.8766

Date: May 4, 2010

Number of Pages *(including cover sheet)*: 9

Health, Safety, Environmental

Lisa Meyer
Senior HSE Engineer

Covidien/Mallinckrodt
3600 N. Second St.
St. Louis, Missouri 63147

Telephone 314-654-3374
Facsimile 314-654-1251

- ☐ For your information
- X Please respond
- ☐ Urgent
- ☐ Confidential

Comments:

Dear Mr. Grace,

Attached please find an application for the Special Discharge of a 10% ethylene glycol and water solution from Building 250 chiller maintenance. If you have any questions or need additional information, please contact me.

Thank you,

Lisa Meyer

Metropolitan St. Louis Sewer District

Phone No. (314) 436-8710
Division of Environmental Compliance, 10 East Grand Avenue, St. Louis, Missouri 63147 Fax No. (314) 436-8766

APPLICATION FOR SPECIAL DISCHARGE APPROVAL

I. WASTEWATER SOURCE IDENTIFICATION:

Site Name: Mallinckrodt
Premise Address: 3600 North 2nd St.
City: St. Louis State: MO Zip: 63147
Owner: Mallinckrodt
Contact Person: Lisa Meyer
Title: Senior HSE Engineer
Phone: 314.654.3374 Fax: 314.654.1251

II. APPLICANT (mailing information):

Applicant Name: Lisa Meyer
Title: Senior HSE Engineer
Company Name: Mallinckrodt
Mailing Address: 3600 North 2nd St.
City: St. Louis State: MO Zip: 63147
Phone: 314.654.3374 Fax: 314.654.1251

III. A. MATERIAL TO BE DISCHARGED (check all applicable boxes):

1. Wastewater description/location: Ethylene glycol/water from B250 Chiller Maintenance
2. Process/activity generating wastewater: B250 Chiller maintenance is requiring discharge of approximately 2100 gallons of 10% ethylene glycol so system can be refilled with a higher concentration.
3. Physical and chemical composition: List all constituents, and known or potentially present regulated contaminants below.
   ☐ See separate listing enclosed, and/or ☐ See analytical results enclosed, and/or ☑ Material Safety Data Sheet enclosed.

DESCRIPTION	RANGE	UNIT
ethylene glycol	10	%
water	90	%

DESCRIPTION *(continued)*	RANGE	UNIT

4. Is this wastewater from a process subject to EPA's categorical standards in 40 CFR Subchapter N? ☐ Yes ☑ No
   a. If yes, the applicable standards are in: 40 CFR Part _____, Subpart _____ ☐ Existing source ☐ New source
5. Does this wastewater contain polychlorinated biphenyls, asbestos or radioactive material? ☐ Yes ☑ No
   a. If yes, describe: _____
6. Representative sample: ☐ Laboratory results attached, and/or ☐ Sample provided (1/2 gallon minimum, clear container)
   a. Sample collection point/location: _____ Collection method: _____
   b. Sampler's name/Co.: _____ Sample date/time: _____
   c. Attach chain of custody as available
7. Discharge will occur over the following time period: ☑ < 30 days ☐ ≥ Two years ☐ Other: _____
   a. Expected total volume of wastewater to be discharged over the time period above: 2100 Gallons
   b. Proposed discharge volume: 2100 Gallons, at a frequency of: ☑ One time ☐ Daily ☐ Weekly ☐ Monthly ☐ Once/three months ☐ Once/six months ☐ Other: _____
8. Pretreatment of wastewater prior to discharge: ☐ None ☑ Yes, describe: pH neutralization at main outfall 010.
   a. If yes, attach site plan, pretreatment system schematic, and design specifications.
9. Wastewater from a remediation project under: ☐ Superfund/CERCLA ☐ RCRA ☐ Voluntary program ☐ UST ☑ Not applicable
   a. If from a remediation project, briefly describe the past and present utilization of the property: _____

III.B. MATERIAL FROM UNDERGROUND STORAGE TANK SOURCE

☑ **Not applicable (go to Section IV)**

Please answer the following questions if you are requesting to discharge wastewater associated with an underground storage tank system.

1. a. Wastewater from: ☐ Inside UST(s) ☐ UST system pit ☐ Excavation outside UST system pit ☐ Monitoring well ☐ Groundwater remediation system

   b. UST project involves wastewater from: ☐ UST(s) closed in place ☐ UST(s) removed ☐ Remediation ☐ Upgrade ☐ Maintenance activities ☐ Well monitoring ☐ Other, explain: _____

   c. If wastewater is from a closure project, how long has UST(s) been out of service: _____ years

2. a. State assigned UST site identification number: _____ ☐ Not applicable

   b. Number of USTs affected: _____ ☐ Unknown

   c. For the UST(s) involved, their state identification number(s): _____ ☐ Not applicable

   d. Service Station Identification Number, as applicable: _____

3. Tank contents/former contents: ☐ Gasoline ☐ #2 diesel ☐ Used oil ☐ Unknown ☐ Other: _____

IV. DISCHARGE LOCATION

1. ☑ On-site. Describe proposed point of entry to sewer and the discharge rate (must be a sanitary or combined sewer): _____
   B250 sewers to SP010 _____ Note: Range of discharge must not surcharge sewer line.

2. ☐ Haul to MSD Bissell Point Hauled Waste Receiving Station at 10 E. Grand, St. Louis, MO.

   a. Transporters Name: _____ and MSD Hauler ID Number: _____

   b. Hazardous Waste Certification:

   For wastewater which is hauled to MSD's Bissell Point Hauled Waste Receiving Station, I hereby certify that to the best of my knowledge and belief, the above hauled waste is not classified as a RCRA "hazardous waste" as defined by the MDNR in 10 CSR 25 or USEPA in 40 CFR Part 261.

   Applicant Name (print): _____

   Signature: _____ **Date:** _____

ADDITIONAL INFORMATION:

_____

V. APPLICANT SIGNATURE AND CERTIFICATION

This application must be signed by the applicant: either the source contact, or a contractor or agent directly responsible for site activities.

I hereby certify that I am directly responsible for activities at the site regarding the wastewater to be discharged, and to the best of my knowledge and belief, based on appropriate inquiry, the information in this application is true, complete, and accurate. The samples or analyses submitted are representative of the materials to be discharged. If granted approval to discharge, I agree to abide by the MSD Ordinances, and all applicable federal, state and local regulations. I agree to pay the costs of any pre-approval analyses performed by MSD and to pay any applicable disposal charges for the volume and strength of the wastes discharged.

Applicant Name (print): Lisa Meyer

Signature: L. Meyer **Date:** 05/04/10

FOR MSD USE ONLY:

File Name: _____ ID No. _____ Sample Point No. _____

COVIDIEN

April 28, 2010

Mr. Doug Mendoza
Metropolitan St. Louis Sewer District
Department of Environmental Compliance
10 East Grand Avenue
St. Louis, MO 63147

Re: 2010 1st Quarter Self-Monitoring Report for Permit No. 21120596-2.1

Dear Mr. Mendoza,

Please find enclosed the 2010 1st Quarter Self Monitoring report for Mallinckrodt Inc.

The following sample points received no pharmaceutical process water flow during the fourth quarter: SP008, SP011, SP918, SP932, and SP935.

Analytical results for portions of required analysis for SP905 and SP915 which indicated results of "No Detection" have detection limits above the reporting limits. The laboratory had issues getting the detection limits below the reporting limits due to sample characteristics which caused instrument interference. They could not obtain valid quality control using lower dilution factors. Valid quality control could only be obtained with higher dilution values thus resulting in the higher reported limits. Therefore, the "no detection" analysis are being reported as such.

If you have any questions or require more detailed information, please contact me at 314.654.3374.

Sincerely,

Lisa Meyer
Senior HSE Engineer

ENCLOSURES

RECEIVED
APR 29 2010
DIVISION OF
ENVIRONMENTAL COMPLIANCE

COVIDIEN/MALLINCKRODT
3600 NORTH SECOND STREET
ST. LOUIS, MO 63147

TELEPHONE: 314-654-2000
FAX: 314-654-1251

METROPOLITAN ST. LOUIS SEWER DISTRICT
INDUSTRIAL USER RADIOACTIVE MATERIALS DISCHARGE REPORT

PART I: IDENTIFYING INFORMATION

Company Name: Mallinckrodt - Covidien

Permit No: 21120596-00

Premise Address: 3600 N Second St. St. Louis, MO 63147

Reporting Period: ☒(JAN-MAR) ☐(APR-JUNE) ☐(JULY-SEPT) ☐(OCT-DEC)

PART II: RECORD OF DISPOSAL OF RADIOACTIVE MATERIALS TO THE SEWER SYSTEM

RADIONUCLIDE	ACTIVITY DISCHARGED (millicuries)
TOTAL ACTIVITY DISCHARGED:	0

PART III: CERTIFICATION STATEMENTS

Place your initials in the box under item A.
Everyone must complete the information under items A & B and sign this report.

(A.) CERTIFICATION OF COMPLIANCE WITH STATE AND FEDERAL REGULATIONS

RCP

I certify that to the best of my knowledge & belief, all requirements of 10 CFR Part 20.2003 and 19 CSR Part 20-10.090 governing disposal by release into sanitary sewage for material regulated by the Nuclear Regulatory Commission and the Missouri Department of Health, respectively, have been met for the period covered by this report.

B. RADIOACTIVE MATERIALS DISCHARGE REPORT CERTIFICATION

I certify under penalty of Law that this document and all attachments were prepared under my direction or supervision in accordance with a system designed to assure that qualified personnel properly gather and evaluate the information submitted. Based on my inquiry of the person or persons who manage the system, or those persons directly responsible for gathering the information, the information submitted is, to the best of my knowledge and belief, true, accurate and complete. I am aware that there are significant penalties for submitting false information, including the possibility of fine and imprisonment for knowing violations.

RECEIVED
APR 27 2010
DIVISION OF
ENVIRONMENTAL COMPLIANCE

Print/type name of signing official: Richard C. Proehl

Title: Site Director Telephone: 314-654-5816

Signature: Richard C Proehl Date: 04/27/10

radrpt.doc 2/00

PART III: SPECIAL CERTIFICATION STATEMENTS

Based on the special conditions contained in your discharge permit you may be required to certify the following. Please review your permit and **PLACE YOUR INITIALS ON THE LINES NEXT TO THE CERTIFICATIONS.**

A — NO CHANGE IN WASTEWATER DISCHARGE AT SAMPLE POINTS WITH NO MONITORING REQUIRED

For permit special conditions that waive monitoring at any sample point(s) specified in your permit, you are required to make the following certification for each report in which monitoring is waived:

RCP I certify, since the last discharge monitoring report, there has been no change in the character of the wastes discharged at sample point(s) _____

B — NO CHANGE IN WASTEWATER DISCHARGE AT ACTIVE CONNECTIONS WITHOUT SAMPLE POINTS

For permit special conditions that waive monitoring at active connection points which are not specified as sample points in your permit, you are required to make the following certification:

RCP I certify, since the last discharge monitoring report, there has been no change in the character of wastes discharged at those active connection points which are not specified in my permit.

D — GRAB IN LIEU OF COMPOSITE REPRESENTS WASTEWATER DISCHARGE

For permit special conditions that authorize grab sample collection in lieu of composite sampling at any sample point(s), you are required to make the following certification for each report in which such authorized grab samples occur:

RCP I certify the grab sample results in this report accurately represent our average daily discharge at sample point(s) _____.

E — NO DISCHARGE OF CATEGORICAL WASTE

For permit special conditions that prohibit discharge of wastes which are subject to certain categorical pretreatment standards, you are required to make the following certification:

RCP I certify, since the last discharge monitoring report, there has been no discharge of wastes which are subject to pretreatment standards in 40 CFR 414 except for wastewater/wastes conveyed by SP905.

F — CYANIDE NOT USED OR GENERATED IN 40 CFR 439 OPERATIONS

Discharges subject to Pharmaceutical Categorical Standards (40 CFR 439) can be exempted from limitations and monitoring for Total Cyanide at the Pharmaceutical sample point(s) _____ subject to the following certification:

RCP I certify, since the last discharge monitoring report, cyanide has not been used or generated in any pharmaceutical manufacturing process subject to Categorical Standards in 40 CFR 439.

H — PHARMACEUTICAL POLLUTANTS NOT USED OR GENERATED IN 40 CFR 439 OPERATIONS

Discharges subject to Pharmaceutical Categorical Standards (40 CFR 439) can be exempted from monitoring for certain 40 CFR 439-regulated pollutants at the Pharmaceutical sample point(s) _____ subject to the following certification:

_____ I certify, since the last discharge monitoring report, the 40 CFR 439-regulated pollutants, as determined in permittee's report dated _____ have not been used or generated in any pharmaceutical manufacturing process subject to Categorical Standards in 40 CFR 439. In addition, the above-referenced report remains valid.

I — SURROGATE MONITORING ALLOWED FOR 40 CFR 439 OPERATIONS

Discharges subject to Pharmaceutical Categorical Standards (40 CFR 439) can be exempted from monitoring for certain 40 CFR 439-regulated pollutants, and replaced by monitoring for surrogate pollutant(s), at the Pharmaceutical sample point(s) _____ subject to the following certification:

_____ I certify, since the last discharge monitoring report, the 40 CFR 439-regulated pollutants, as determined in permittee's report dated _____ continue to receive the same degree of treatment as the surrogate pollutant(s). In addition, the above-referenced report remains valid.

PART IV: GENERAL CERTIFICATION STATEMENTS

B — DISCHARGE MONITORING REPORT CERTIFICATION

All permittees must sign and complete the information below:

I certify under penalty of Law that this document and all attachments were prepared under my direction or supervision in accordance with a system designed to assure that qualified personnel properly gather and evaluate the information submitted. Based on my inquiry of the person or persons who manage the system, or those persons directly responsible for gathering the information, the information submitted is, to the best of my knowledge and belief, true, accurate, and complete. I am aware that there are significant penalties for submitting false information, including the possibility of fine and imprisonment for knowing violations.

RECEIVED
APR 29 2010
DIVISION OF ENVIRONMENTAL COMPLIANCE

Print or type name of signing official: Richard C. Proehl

Title: Site Director Telephone: 314.654.[illegible]

Signature: Richard C Proehl Date: 04/27/10

METROPOLITAN ST. LOUIS SEWER DISTRICT
2010 INDUSTRIAL USER SELF MONITORING REPORT

PLEASE READ THE INSTRUCTIONS BEFORE COMPLETING THIS REPORT

PART I: IDENTIFYING INFORMATION

Company Name: Mallinckrodt Inc.

Permit No.: 2112059600 - 2.1

Premise Address: 3600 North Second St., St. Louis, MO 63147

Monitoring Period: __X__(JAN-MAR) ____(APR-JUNE) ____(JULY-SEPT) _____(OCT-DEC)

Samples Collected By: Mallinckrodt Inc

Analysis Performed By:

Part II: ANALYTICAL RESULTS OF SELF MONITORING

MSD SAMPLE POINT REFERENCE NUMBERS	---->		001					
DATES ON WHICH SAMPLES WERE COLLECTED	---->		NA					
TIMES AT WHICH SAMPLES WERE COLLECTED	---->							
PARAMETER	LIMIT	RECORD SAMPLE TYPES (G,C,M OR E) & RESULTS BELOW G=grab,C=composite,M=measured flow,E=estimated flow						UNITS
FLOW		E	1,000					gal/day
NO MONITORING REQUIRED (Sanitary Only)								
There have been no change in the character of the wastes discharged since the last report.								

RECEIVED
APR 29 2010
DIVISION OF
ENVIRONMENTAL COMPLIANCE

METROPOLITAN ST. LOUIS SEWER DISTRICT
2010 INDUSTRIAL USER SELF MONITORING REPORT

PLEASE READ THE INSTRUCTIONS BEFORE COMPLETING THIS REPORT

PART I: IDENTIFYING INFORMATION

Company Name: Mallinckrodt Inc.

Permit No.: 2112059600 - 2.1

Premise Address: 3600 North Second St., St. Louis, MO 63147

Monitoring Period: __X__(JAN-MAR) ____(APR-JUNE) ____(JULY-SEPT) ____(OCT-DEC)

Samples Collected By: Mallinckrodt Inc

Analysis Performed By:

Part II: ANALYTICAL RESULTS OF SELF MONITORING

MSD SAMPLE POINT REFERENCE NUMBERS	----->		002					
DATES ON WHICH SAMPLES WERE COLLECTED	----->		NA					
TIMES AT WHICH SAMPLES WERE COLLECTED	----->							
PARAMETER	LIMIT	RECORD SAMPLE TYPES (G,C,M OR E) & RESULTS BELOW G=grab,C=composite,M=measured flow,E=estimated flow						UNITS
FLOW		E	2,200					gal/day
NO MONITORING REQUIRED (Sanitary Only)								
There have been no change in the character of the wastes discharged since the last report.								

RECEIVED
APR 29 2010
DIVISION OF
ENVIRONMENTAL COMPLIANCE

METROPOLITAN ST. LOUIS SEWER DISTRICT
2010 INDUSTRIAL USER SELF MONITORING REPORT

PLEASE READ THE INSTRUCTIONS BEFORE COMPLETING THIS REPORT

PART I: IDENTIFYING INFORMATION

Company Name: Mallinckrodt Inc.

Permit No.: 2112059600 - 2.1

Premise Address: 3600 North Second St., St. Louis, MO 63147

Monitoring Period: __X__(JAN-MAR) ____(APR-JUNE) ____(JULY-SEPT) _____(OCT-DEC)

Samples Collected By: Mallinckrodt

Analysis Performed By: TEKLAB

Part II: ANALYTICAL RESULTS OF SELF MONITORING

MSD SAMPLE POINT REFERENCE NUMBERS	----->		003		009		099	
DATES ON WHICH SAMPLES WERE COLLECTED	----->		1/6/2010		1/6/2010		calculated	
TIMES AT WHICH SAMPLES WERE COLLECTED	----->		07:05, 08:15, 09:15, 10:15		07:35, 08:35, 9:45, 10:50		n/a	
PARAMETER	LIMIT	RECORD SAMPLE TYPES (G,C,M OR E) & RESULTS BELOW G=grab,C=composite,M=measured flow,E=estimated flow						UNITS
FLOW		M	17,539	M	14,947	E	2,592	gal/day
Oil & Grease	200	G	19	G	9	E	77	mg/l
Biochemical Oxygen Demand	****	C	136	C	76	E	482	mg/l
Chemical Oxygen Demand	****	C	207	C	196	E	270	mg/l
Total Suspended Solids	****	C	157	C	20	E	947	mg/l
Temperature	60	G	26	G	14	E	20	deg C
pH	5.5 - 11.5	G	6.0	G	7.0	E	6.5	S.U.
Lab Dilution Factor			1		1			

RECEIVED
APR 29 2010
DIVISION OF
ENVIRONMENTAL COMPLIANCE

METROPOLITAN ST. LOUIS SEWER DISTRICT
2010 INDUSTRIAL USER SELF MONITORING REPORT

PLEASE READ THE INSTRUCTIONS BEFORE COMPLETING THIS REPORT

PART I: IDENTIFYING INFORMATION

Company Name: Mallinckrodt Inc.

Permit No.: 2112059600 - 2.1

Premise Address: 3600 North Second St., St. Louis, MO 63147

Monitoring Period: __X__(JAN-MAR) ____(APR-JUNE) ____(JULY-SEPT) ____(OCT-DEC)

Samples Collected By: Mallinckrodt

Analysis Performed By: TEKLab

Part II: ANALYTICAL RESULTS OF SELF MONITORING

D ← U

MSD SAMPLE POINT REFERENCE NUMBERS ----->					003		009		099		
DATES ON WHICH SAMPLES WERE COLLECTED ----->					1/6/2010		1/6/2010		calculated		
TIMES AT WHICH SAMPLES WERE COLLECTED ----->					07:05, 08:15, 09:15, 10:15		07:35, 08:35, 9:45, 10:50				
PARAMETER				LIMIT	RECORD SAMPLE TYPES (G,C,M OR E) & RESULTS BELOW G=grab,C=composite,M=measured flow,E=estimated flow						UNITS
FLOW					M	17,539	M	14,947			gal/day
1,1,1-Trichloroethane					G	<0.005	G	<0.005		0.005	mg/l
1,1,2,2-Tetrachloroethane					G	<0.005	G	<0.005		0.005	mg/l
1,1,2-Trichloroethane					G	<0.005	G	<0.005		0.005	mg/l
1,1-Dichloroethane					G	0.0038	G	<0.005		0*	mg/l
1,1-Dichloroethene					G	+ 0.0023	G	<0.005		0*	mg/l
1,2-Dichlorobenzene					G	<0.005	G	<0.005		0.005	mg/l
1,2-Dichloroethane					G	<0.005	G	<0.005		0.005	mg/l
1,2-Dichloropropane					G	<0.005	G	<0.005		0.005	mg/l
1,3-Dichlorobenzene					G	<0.005	G	<0.005		0.005	mg/l
1,4-Dichlorobenzene					G	<0.005	G	<0.005		0.005	mg/l
2-Chloroethylvinylether					G	<0.020	G	<0.020		0.020	mg/l
Acrolein					G	<0.1	G	<0.1		0.100	mg/l
Acrylonitrile					G	<0.005	G	<0.005		0.005	mg/l
Benzene					G	0.0008	G	0.0007		0.000	mg/l
Bromodichloromethane					G	<0.005	G	<0.005		0.005	mg/l
Bromoform					G	<0.005	G	<0.005		0.005	mg/l
Bromomethane					G	<0.010	G	<0.010		0.010	mg/l
Carbon Tetrachloride					G	<0.005	G	<0.005		0.005	mg/l
Chlorobenzene					G	<0.005	G	<0.005		0.005	mg/l
Chloroethane					G	<0.010	G	<0.010		0.010	mg/l
Chloroform					G	0.0022	G	0.0038		0*	mg/l
Chloromethane					G	<0.010	G	<0.010		0.010	mg/l
cis-1,3-Dicholropropene					G	<0.005	G	<0.005		0.005	mg/l
Dibromochloromethane					G	<0.005	G	<0.005		0.005	mg/l
Ethylbenzene					G	<0.005	G	<0.005		0.005	mg/l
Methylene Chloride					G	<0.005	G	<0.005		0.005	mg/l
Tetrachloroethene					G	<0.005	G	<0.005		0.005	mg/l
Toluene					G	<0.002	G	<0.002		0.002	mg/l
1,2-Dichloroethene					G	<0.005	G	<0.005		0.005	mg/l
trans-1,3-Dichloropropene					G	<0.005	G	<0.005		0.005	mg/l
Trichloroethene					G	0.0185	G	<0.005		0.093	mg/l
Vinyl Chloride					G	0.0061	G	<0.002		0.029	mg/l
1,2,4-Trichlorobenzene					G	<0.016	G	<0.016		0.016	mg/l
2,4,6-Trichlorophenol					G	<0.016	G	<0.016		0.016	mg/l
2,4-Dichlorophenol					G	<0.016	G	<0.016		0.016	mg/l
2,4-Dimethylphenol					G	<0.016	G	<0.016		0.016	mg/l
2,4-Dinitrophenol					G	<0.031	G	<0.031		0.031	mg/l
2,4-Dinitrotoluene					G	<0.016	G	<0.016		0.016	mg/l
2,6-Dinitrotoluene					G	<0.016	G	<0.016		0.016	mg/l
2-Chloronapthalene					G	<0.016	G	<0.016		0.016	mg/l
2-Chlorophenol					G	<0.016	G	<0.016		0.016	mg/l
2-Nitrophenol					G	<0.031	G	<0.031		0.031	mg/l
3,3-Dichlorobenzidine					G	<0.016	G	<0.016		0.016	mg/l
2-Methyl-4,6-dinitrophenol					G	<0.031	G	<0.031		0.031	mg/l
4-Bromophenyl-phenylether					G	<0.016	G	<0.016		0.016	mg/l
4-Chloro-3-methylphenol					G	<0.031	G	<0.031		0.031	mg/l
4-Chlorophenyl-phenylether					G	<0.016	G	<0.016		0.016	mg/l
4-Nitrophenol					G	<0.031	G	<0.031		0.031	mg/l
Acenapthene					G	<0.016	G	<0.016		0.016	mg/l
Acenaphthylene					G	<0.016	G	<0.016		0.016	mg/l
Anthracene					G	<0.016	G	<0.016		0.016	mg/l

RECEIVED
APR 29 2010
DIVISION OF
ENVIRONMENTAL COMPLIANCE

METROPOLITAN ST. LOUIS SEWER DISTRICT
2010 INDUSTRIAL USER SELF MONITORING REPORT

PLEASE READ THE INSTRUCTIONS BEFORE COMPLETING THIS REPORT

PART I: IDENTIFYING INFORMATION

Company Name: Mallinckrodt Inc.

Permit No.: 2112059600 - 2.1

Premise Address: 3600 North Second St., St. Louis, MO 63147

Monitoring Period: __X___(JAN-MAR) ____(APR-JUNE) ____(JULY-SEPT) ____(OCT-DEC)

Samples Collected By: Mallinckrodt

Analysis Performed By: TEKLab

Part II: ANALYTICAL RESULTS OF SELF MONITORING

D ← U

MSD SAMPLE POINT REFERENCE NUMBERS ----->					003		009		099		
DATES ON WHICH SAMPLES WERE COLLECTED ----->					1/6/2010		1/6/2010		calculated		
TIMES AT WHICH SAMPLES WERE COLLECTED ----->					07:05, 08:15, 09:15, 10:15		07:35, 08:35, 9:45, 10:50				
PARAMETER				LIMIT	RECORD SAMPLE TYPES (G,C,M OR E) & RESULTS BELOW G=grab,C=composite,M=measured flow,E=estimated flow						UNITS
FLOW					M	17,539	M	14,947			gal/day
Benzidine					G	<0.062	G	<0.062		0.062	mg/l
Benzo(a)anthracene					G	<0.016	G	<0.016		0.016	mg/l
Benzo(a)pyrene					G	<0.016	G	<0.016		0.016	mg/l
Benzo(b)fluoranthene					G	<0.016	G	<0.016		0.016	mg/l
Benzo(g,h,i)perylene					G	<0.016	G	<0.016		0.016	mg/l
Benzo(k)fluoranthene					G	<0.016	G	<0.016		0.016	mg/l
Bis(2-chloroethoxy)methane					G	<0.016	G	<0.016		0.016	mg/l
Bis(2-chloroethyl)ether					G	<0.016	G	<0.016		0.016	mg/l
Bis(2-chloroisopropyl)ether					G	<0.016	G	<0.016		0.016	mg/l
Bis(2-ethylhexyl)phthalate					G	<0.009	G	<0.009		0.009	mg/l
Butyl benzyl phthalate					G	<0.016	G	<0.016		0.016	mg/l
Chrysene					G	<0.016	G	<0.016		0.016	mg/l
Dibenzo(a,h)anthracene					G	<0.016	G	<0.016		0.016	mg/l
Diethyl phthalate					G	<0.016	G	<0.016		0.016	mg/l
Dimethyl phthalate					G	<0.016	G	<0.016		0.016	mg/l
Di-n-butyl phthalate					G	<0.016	G	<0.016		0.016	mg/l
Di-n-octyl-phthalate					G	<0.016	G	<0.016		0.016	mg/l
Fluorene					G	<0.016	G	<0.016		0.016	mg/l
Fluoranthene					G	<0.016	G	<0.016		0.016	mg/l
Hexachlorobenzene					G	<0.016	G	<0.016		0.016	mg/l
Hexachlorobutadiene					G	0.002	G	<0.016		0*	mg/l
Hexachlorocyclopentadiene					G	<0.031	G	<0.031		0.031	mg/l
Hexachloroethane					G	<0.016	G	<0.016		0.016	mg/l
Ideno(1,2,3-cd)pyrene					G	<0.016	G	<0.016		0.016	mg/l
Isophorone					G	<0.016	G	<0.016		0.016	mg/l
Naphthalene					G	<0.016	G	<0.016		0.016	mg/l
Nitrobenzene					G	<0.016	G	<0.016		0.016	mg/l
N-nitrosodimethylamine					G	<0.031	G	<0.031		0.031	mg/l
N-nitrosodi-n-propylamine					G	<0.016	G	<0.016		0.016	mg/l
N-nitrosodiphenylamine					G	<0.016	G	<0.016		0.016	mg/l
Pentachlorophenol					G	<0.031	G	<0.031		0.031	mg/l
Phenanthrene					G	<0.016	G	<0.016		0.016	mg/l
Phenol					G	<0.008	G	<0.008		0.008	mg/l
Pyrene					G	<0.016	G	<0.016		0.016	mg/l
1,2-Diphenylhydrazine					G	<0.016	G	<0.016		0.016	mg/l
* If calculated number was negative, it was reported as 0.											
Total Toxic Organics				5.52	--	1.294	--	1.298	--	1.373	mg/l
Lab Dilution Factor						1, 2		1			

RECEIVED
APR 29 2010
DIVISION OF
ENVIRONMENTAL COMPLIANCE

METROPOLITAN ST. LOUIS SEWER DISTRICT
2010 INDUSTRIAL USER SELF MONITORING REPORT

PLEASE READ THE INSTRUCTIONS BEFORE COMPLETING THIS REPORT

PART I: IDENTIFYING INFORMATION

Company Name: Mallinckrodt Inc.

Permit No.: 2112059600 - 2.1

Premise Address: 3600 North Second St., St. Louis, MO 63147

Monitoring Period: __X___(JAN-MAR) ____(APR-JUNE) ____(JULY-SEPT) ____(OCT-DEC)

Samples Collected By: Mallinckrodt

Analysis Performed By: TEKLAB

Part II: ANALYTICAL RESULTS OF SELF MONITORING

MSD SAMPLE POINT REFERENCE NUMBERS	---->		005					
DATES ON WHICH SAMPLES WERE COLLECTED	---->		1/6/2010					
TIMES AT WHICH SAMPLES WERE COLLECTED	---->		09:35, 10:35, 11:35, 12:35					
PARAMETER	LIMIT	RECORD SAMPLE TYPES (G,C,M OR E) & RESULTS BELOW G=grab,C=composite,M=measured flow,E=estimated flow						UNITS
FLOW		E	32,000					gal/day
Oil & Grease	200	G	<5					mg/l
Biochemical Oxygen Demand	****	C	2970					mg/l
Chemical Oxygen Demand	****	C	251					mg/l
Total Suspended Solids	****	C	13					mg/l
Temperature	60	G	10					deg C
pH	5.5 - 11.5	G	7.0					S.U.
Lab Dilution Factor			1					

METROPOLITAN ST. LOUIS SEWER DISTRICT
2010 INDUSTRIAL USER SELF MONITORING REPORT

PLEASE READ THE INSTRUCTIONS BEFORE COMPLETING THIS REPORT

PART I: IDENTIFYING INFORMATION

Company Name: Mallinckrodt Inc.

Permit No.: 2112059600 - 2.1

Premise Address: 3600 North Second St., St. Louis, MO 63147

Monitoring Period: __X__(JAN-MAR) ____(APR-JUNE) ____(JULY-SEPT) ____(OCT-DEC)

Samples Collected By: Mallinckrodt

Analysis Performed By: TEKLAB

Part II: ANALYTICAL RESULTS OF SELF MONITORING

MSD SAMPLE POINT REFERENCE NUMBERS	----->		005					
DATES ON WHICH SAMPLES WERE COLLECTED	----->		1/6/2010					
TIMES AT WHICH SAMPLES WERE COLLECTED	----->		09:35, 10:35, 11:35, 12:35					
PARAMETER	LIMIT	RECORD SAMPLE TYPES (G,C,M OR E) & RESULTS BELOW G=grab,C=composite,M=measured flow,E=estimated flow						UNITS
FLOW		E	32,000					gal/day
1,1,1-Trichloroethane		G	<0.005					mg/l
1,1,2,2-Tetrachloroethane		G	<0.005					mg/l
1,1,2-Trichloroethane		G	<0.005					mg/l
1,1-Dichloroethane		G	<0.005					mg/l
1,1-Dichloroethene		G	<0.005					mg/l
1,2-Dichlorobenzene		G	<0.005					mg/l
1,2-Dichloroethane		G	<0.005					mg/l
1,2-Dichloropropane		G	<0.005					mg/l
1,3-Dichlorobenzene		G	<0.005					mg/l
1,4-Dichlorobenzene		G	<0.005					mg/l
2-Chloroethylvinylether		G	<0.020					mg/l
Acrolein		G	<0.100					mg/l
Acrylonitrile		G	<0.005					mg/l
Benzene		G	<0.002					mg/l
Bromodichloromethane		G	<0.005					mg/l
Bromoform		G	<0.005					mg/l
Bromomethane		G	<0.010					mg/l
Carbon Tetrachloride		G	<0.005					mg/l
Chlorobenzene		G	<0.005					mg/l
Chloroethane		G	<0.010					mg/l
Chloroform		G	0.0012					mg/l
Chloromethane		G	<0.010					mg/l
cis-1,3-Dicholropropene		G	<0.005					mg/l
Dibromochloromethane		G	<0.005					mg/l
Ethylbenzene		G	<0.005					mg/l
Methylene Chloride		G	<0.005					mg/l
Tetrachloroethene		G	<0.005					mg/l
Toluene		G	0.0168					mg/l
trans-1,2-Dichloroethene		G	<0.005					mg/l
trans-1,3-Dichloropropene		G	<0.005					mg/l
Trichloroethene		G	<0.005					mg/l
Vinyl Chloride		G	<0.002					mg/l
1,2,4-Trichlorobenzene		G	<0.016					mg/l
2,4,6-Trichlorophenol		G	<0.016					mg/l
2,4-Dichlorophenol		G	<0.016					mg/l
2,4-Dimethylphenol		G	<0.016					mg/l
2,4-Dinitrophenol		G	<0.031					mg/l
2,4-Dinitrotoluene		G	<0.016					mg/l
2,6-Dinitrotoluene		G	<0.016					mg/l
2-Chloronapthalene		G	<0.016					mg/l
2-Chlorophenol		G	<0.016					mg/l
2-Nitrophenol		G	<0.031					mg/l
3,3-Dichlorobenzidine		G	<0.016					mg/l
2-Methyl-4,6-dinitrophenol		G	<0.031					mg/l
4-Bromophenyl-phenylether		G	<0.016					mg/l
4-Chloro-3-methylphenol		G	<0.031					mg/l
4-Chlorophenyl-phenylether		G	<0.016					mg/l
4-Nitrophenol		G	<0.031					mg/l
Acenapthene		G	<0.016					mg/l
Acenaphthylene		G	<0.016					mg/l
Anthracene		G	<0.016					mg/l

METROPOLITAN ST. LOUIS SEWER DISTRICT
2010 INDUSTRIAL USER SELF MONITORING REPORT

PLEASE READ THE INSTRUCTIONS BEFORE COMPLETING THIS REPORT

PART I: IDENTIFYING INFORMATION

Company Name: Mallinckrodt Inc.

Permit No.: 2112059600 - 2.1

Premise Address: 3600 North Second St., St. Louis, MO 63147

Monitoring Period: __X__(JAN-MAR) ____(APR-JUNE) ____(JULY-SEPT) ____(OCT-DEC)

Samples Collected By: Mallinckrodt

Analysis Performed By: TEKLAB

Part II: ANALYTICAL RESULTS OF SELF MONITORING

MSD SAMPLE POINT REFERENCE NUMBERS	----->		005					
DATES ON WHICH SAMPLES WERE COLLECTED	---->		1/6/2010					
TIMES AT WHICH SAMPLES WERE COLLECTED	----->		09:35, 10:35, 11:35, 12:35					
PARAMETER	LIMIT	RECORD SAMPLE TYPES (G,C,M OR E) & RESULTS BELOW G=grab,C=composite,M=measured flow,E=estimated flow						UNITS
FLOW		E	32,000					gal/day
Benzidine		G	<0.062					mg/l
Benzo(a)anthracene		G	<0.016					mg/l
Benzo(a)pyrene		G	<0.016					mg/l
Benzo(b)fluoranthene		G	<0.016					mg/l
Benzo(g,h,i)perylene		G	<0.016					mg/l
Benzo(k)fluoranthene		G	<0.016					mg/l
Bis(2-chloroethoxy)methane		G	<0.016					mg/l
Bis(2-chloroethyl)ether		G	<0.016					mg/l
Bis(2-chloroisopropyl)ether		G	<0.016					mg/l
Bis(2-ethylhexyl)phthalate		G	<0.009					mg/l
Butyl benzyl phthalate		G	<0.016					mg/l
Chrysene		G	<0.016					mg/l
Dibenzo(a,h)anthracene		G	<0.016					mg/l
Diethyl phthalate		G	<0.016					mg/l
Dimethyl phthalate		G	<0.016					mg/l
Di-n-butyl phthalate		G	<0.016					mg/l
Di-n-octyl-phthalate		G	<0.016					mg/l
Fluoranthene		G	<0.016					mg/l
Fluorene		G	<0.016					mg/l
Hexachlorobenzene		G	<0.016					mg/l
Hexachlorobutadiene		G	<0.016					mg/l
Hexachlorocyclopentadiene		G	<0.031					mg/l
Hexachloroethane		G	<0.016					mg/l
Ideno(1,2,3-cd)pyrene		G	<0.016					mg/l
Isophorone		G	<0.016					mg/l
Naphthalene		G	<0.016					mg/l
Nitrobenzene		G	<0.016					mg/l
N-nitrosodimethylamine		G	<0.031					mg/l
N-nitrosodi-n-propylamine		G	<0.016					mg/l
N-nitrosodiphenylamine		G	<0.016					mg/l
Pentachlorophenol		G	<0.031					mg/l
Phenanthrene		G	<0.016					mg/l
Phenol		G	<0.008					mg/l
Pyrene		G	<0.016					mg/l
1,2-Diphenylhydrazine		G	<0.016					mg/l
Total Toxic Organics	5.52	--	1.301					mg/l
Lab Dilution Factor			1					

METROPOLITAN ST. LOUIS SEWER DISTRICT
2010 INDUSTRIAL USER SELF MONITORING REPORT

PLEASE READ THE INSTRUCTIONS BEFORE COMPLETING THIS REPORT

PART I: IDENTIFYING INFORMATION

Company Name: Mallinckrodt Inc.

Permit No.: 2112059600 - 2.1

Premise Address: 3600 North Second St., St. Louis, MO 63147

Monitoring Period: __X__(JAN-MAR) ____(APR-JUNE) ____(JULY-SEPT) ____(OCT-DEC)

Samples Collected By: Mallinckrodt

Analysis Performed By: TEKLAB

Part II: ANALYTICAL RESULTS OF SELF MONITORING

MSD SAMPLE POINT REFERENCE NUMBERS	----->		008					
DATES ON WHICH SAMPLES WERE COLLECTED	----->							
TIMES AT WHICH SAMPLES WERE COLLECTED	----->							
PARAMETER	LIMIT	RECORD SAMPLE TYPES (G,C,M OR E) & RESULTS BELOW G=grab,C=composite,M=measured flow,E=estimated flow						UNITS
FLOW		E	*					gal/day
Oil & Grease	200	G						mg/l
Biochemical Oxygen Demand	****	G						mg/l
Chemical Oxygen Demand	****	G						mg/l
Temperature	60	G						deg C
Total Suspended Solids	****	G						mg/L
pH	5.5 - 11.5	G						S.U.
* No flow from this outfall during this reporting period.								
Lab Dilution Factor								

METROPOLITAN ST. LOUIS SEWER DISTRICT
2010 INDUSTRIAL USER SELF MONITORING REPORT

PLEASE READ THE INSTRUCTIONS BEFORE COMPLETING THIS REPORT

PART I: IDENTIFYING INFORMATION

Company Name: Mallinckrodt Inc.

Permit No.: 2112059600 -2.1

Premise Address: 3600 North Second St., St. Louis, MO 63147

Monitoring Period: __X___(JAN-MAR) ____(APR-JUNE) ____(JULY-SEPT) _____(OCT-DEC)

Samples Collected By: Mallinckrodt

Analysis Performed By: TEKLAB

Part II: ANALYTICAL RESULTS OF SELF MONITORING

MSD SAMPLE POINT REFERENCE NUMBERS	----->		010					
DATES ON WHICH SAMPLES WERE COLLECTED	----->		1/6/2010					
TIMES AT WHICH SAMPLES WERE COLLECTED	----->		07:50, 08:50, 10:00, 11:00					
PARAMETER	LIMIT	RECORD SAMPLE TYPES (G,C,M OR E) & RESULTS BELOW G=grab,C=composite,M=measured flow,E=estimated flow						UNITS
FLOW		E	1,860,482					gal/day
Oil & Grease	200	G	35					mg/l
Biochemical Oxygen Demand	****	C	927					mg/l
Chemical Oxygen Demand	****	C	1430					mg/l
Total Suspended Solids	****	C	87					mg/l
Temperature	60	G	24					deg C
pH	5.5 - 11.5	G	see attached					S.U.
Chromium	5	C	<0.010					mg/l
Copper	2.7	C	0.029					mg/l
Nickel	2.3	C	0.023					mg/l
Zinc	3	C	0.054					mg/l
Lab Dilution Factor			1					

Mallinckrodt pH Monitoring for SP010: January, 2010

Date / Time	pH	Total for Event in Minutes
06-Jan-10 14:45:00	3.9	5
19-Jan-10 14:35:00	11.7	
19-Jan-10 14:40:00	11.7	
19-Jan-10 14:45:00	11.6	15
21-Jan-10 10:10:00	3.8	5
26-Jan-10 08:25:00	12.0	
26-Jan-10 08:30:00	12.1	
26-Jan-10 08:35:00	12.4	
26-Jan-10 08:40:00	12.0	20
27-Jan-10 13:05:00	4.2	5
	January Total	**25**

Mallinckrodt pH Monitoring for SP010: February, 2010

Date / Time	pH	Total for Event in Minutes
12-Feb-10 08:45:00	3.9	5
18-Feb-10 10:45:00	4.1	5
26-Feb-10 11:00:00	4.5	5
	February Total:	**15**

Mallinckrodt pH Monitoring for SP010: March, 2010

Date / Time	pH	Total for Event in Minutes
04-Mar-10 10:15:00	4.9	5
10-Mar-10 12:55:00	4.0	5
12-Mar-10 22:45:00	11.8	5
13-Mar-10 20:10:00	4.7	5
16-Mar-10 09:20:00	11.6	
16-Mar-10 09:25:00	11.8	
16-Mar-10 09:30:00	11.6	15
26-Mar-10 09:20:00	4.0	5
	March Total:	**40**

METROPOLITAN ST. LOUIS SEWER DISTRICT
2010 INDUSTRIAL USER SELF MONITORING REPORT

PLEASE READ THE INSTRUCTIONS BEFORE COMPLETING THIS REPORT

PART I: IDENTIFYING INFORMATION

Company Name: Mallinckrodt Inc.

Permit No.: 21120596-00

Premise Address: 3600 North Second St., St. Louis, MO 63147

Monitoring Period: __X__(JAN-MAR) ____(APR-JUNE) ___(JULY-SEPT) ____(OCT-DEC)

Samples Collected By: Mallinckrodt

Analysis Performed By: TEKLAB

Part II: ANALYTICAL RESULTS OF SELF MONITORING

MSD SAMPLE POINT REFERENCE NUMBERS	---->		010					
DATES ON WHICH SAMPLES WERE COLLECTED	---->		1/6/2010					
TIMES AT WHICH SAMPLES WERE COLLECTED	---->		07:50, 08:50, 10:00, 11:00					
PARAMETER	LIMIT	RECORD SAMPLE TYPES (G,C,M OR E) & RESULTS BELOW G=grab,C=composite,M=measured flow,E=estimated flow						UNITS
FLOW		E	1,860,482	E		E		gal/day
1,1,1-Trichloroethane		G	<0.005	G		G		mg/l
1,1,2,2-Tetrachloroethane		G	<0.005	G		G		mg/l
1,1,2-Trichloroethane		G	<0.005	G		G		mg/l
1,1-Dichloroethane		G	<0.005	G		G		mg/l
1,1-Dichloroethene		G	<0.005	G		G		mg/l
1,2-Dichlorobenzene		G	<0.005	G		G		mg/l
1,2-Dichloroethane		G	<0.005	G		G		mg/l
1,2-Dichloropropane		G	<0.005	G		G		mg/l
1,3-Dichlorobenzene		G	<0.005	G		G		mg/l
1,4-Dichlorobenzene		G	<0.005	G		G		mg/l
2-Chloroethylvinylether		G	<0.020	G		G		mg/l
Acrolein		G	<0.100	G		G		mg/l
Acrylonitrile		G	<0.005	G		G		mg/l
Benzene		G	<0.002	G		G		mg/l
Bromodichloromethane		G	0.0016	G		G		mg/l
Bromoform		G	<0.005	G		G		mg/l
Bromomethane		G	<0.010	G		G		mg/l
Carbon Tetrachloride		G	<0.005	G		G		mg/l
Chlorobenzene		G	<0.005	G		G		mg/l
Chloroethane		G	<0.010	G		G		mg/l
Chloroform		G	0.0121	G		G		mg/l
Chloromethane		G	<0.010	G		G		mg/l
cis-1,3-Dicholropropene		G	<0.005	G		G		mg/l
Dibromochloromethane		G	<0.005	G		G		mg/l
Ethylbenzene		G	<0.005	G		G		mg/l
Methylene Chloride		G	<0.005	G		G		mg/l
Tetrachloroethene		G	<0.005	G		G		mg/l
Toluene		G	<0.002	G		G		mg/l
trans-1,2-Dichloroethene		G	<0.005	G		G		mg/l
trans-1,3-Dichloropropene		G	<0.005	G		G		mg/l
Trichloroethene		G	<0.005	G		G		mg/l
Vinyl Chloride		G	<0.002	G		G		mg/l
1,2,4-Trichlorobenzene		G	<0.039	G		G		mg/l
2,4,6-Trichlorophenol		G	<0.039	G		G		mg/l
2,4-Dichlorophenol		G	<0.039	G		G		mg/l
2,4-Dimethylphenol		G	<0.039	G		G		mg/l
2,4-Dinitrophenol		G	<0.079	G		G		mg/l
2,4-Dinitrotoluene		G	<0.039	G		G		mg/l
2,6-Dinitrotoluene		G	<0.039	G		G		mg/l
2-Chloronapthalene		G	<0.039	G		G		mg/l
2-Chlorophenol		G	<0.039	G		G		mg/l
2-Nitrophenol		G	<0.079	G		G		mg/l
3,3-Dichlorobenzidine		G	<0.039	G		G		mg/l
2-Methyl-4,6-dinitrophenol		G	<0.079	G		G		mg/l
4-Bromophenyl-phenylether		G	<0.039	G		G		mg/l
4-Chloro-3-methylphenol		G	<0.079	G		G		mg/l
4-Chlorophenyl-phenylether		G	<0.039	G		G		mg/l
4-Nitrophenol		G	<0.079	G		G		mg/l
Acenapthene		G	<0.039	G		G		mg/l
Acenaphthylene		G	<0.039	G		G		mg/l
Anthracene		G	<0.039	G		G		mg/l

METROPOLITAN ST. LOUIS SEWER DISTRICT
2010 INDUSTRIAL USER SELF MONITORING REPORT

PLEASE READ THE INSTRUCTIONS BEFORE COMPLETING THIS REPORT

PART I: IDENTIFYING INFORMATION

Company Name: Mallinckrodt Inc.

Permit No.: 21120596-00

Premise Address: 3600 North Second St., St. Louis, MO 63147

Monitoring Period: __X__(JAN-MAR) ____(APR-JUNE) ___(JULY-SEPT) ____(OCT-DEC)

Samples Collected By: Mallinckrodt

Analysis Performed By: TEKLAB

Part II: ANALYTICAL RESULTS OF SELF MONITORING

MSD SAMPLE POINT REFERENCE NUMBERS	---->		010					
DATES ON WHICH SAMPLES WERE COLLECTED	---->		1/6/2010					
TIMES AT WHICH SAMPLES WERE COLLECTED	---->		07:50, 08:50, 10:00, 11:00					
PARAMETER	LIMIT	RECORD SAMPLE TYPES (G,C,M OR E) & RESULTS BELOW G=grab,C=composite,M=measured flow,E=estimated flow						UNITS
FLOW		E	1,860,482	E		E		gal/day
Benzidine		G	<0.157	G		G		mg/l
Benzo(a)anthracene		G	<0.039	G		G		mg/l
Benzo(a)pyrene		G	<0.039	G		G		mg/l
Benzo(b)fluoranthene		G	<0.039	G		G		mg/l
Benzo(g,h,i)perylene		G	<0.039	G		G		mg/l
Benzo(k)fluoranthene		G	<0.039	G		G		mg/l
Bis(2-chloroethoxy)methane		G	<0.039	G		G		mg/l
Bis(2-chloroethyl)ether		G	+ 0.022	G		G		mg/l
Bis(2-chloroisopropyl)ether		G	<0.039	G		G		mg/l
Bis(2-ethylhexyl)phthalate		G	<0.024	G		G		mg/l
Butyl benzyl phthalate		G	<0.039	G		G		mg/l
Chrysene		G	<0.039	G		G		mg/l
Dibenzo(a,h)anthracene		G	<0.039	G		G		mg/l
Diethyl phthalate		G	<0.039	G		G		mg/l
Dimethyl phthalate		G	<0.039	G		G		mg/l
Di-n-butyl phthalate		G	<0.039	G		G		mg/l
Di-n-octyl-phthalate		G	<0.039	G		G		mg/l
Fluoranthene		G	<0.039	G		G		mg/l
Fluorene		G	<0.039	G		G		mg/l
Hexachlorobenzene		G	<0.039	G		G		mg/l
Hexachlorobutadiene		G	<0.039	G		G		mg/l
Hexachlorocyclopentadiene		G	<0.079	G		G		mg/l
Hexachloroethane		G	<0.039	G		G		mg/l
Ideno(1,2,3-cd)pyrene		G	<0.039	G		G		mg/l
Isophorone		G	<0.039	G		G		mg/l
Naphthalene		G	<0.039	G		G		mg/l
Nitrobenzene		G	<0.039	G		G		mg/l
N-nitrosodimethylamine		G	<0.079	G		G		mg/l
N-nitrosodi-n-propylamine		G	<0.039	G		G		mg/l
N-nitrosodiphenylamine		G	<0.039	G		G		mg/l
Pentachlorophenol		G	<0.079	G		G		mg/l
Phenanthrene		G	<0.039	G		G		mg/l
Phenol		G	<0.020	G		G		mg/l
Pyrene		G	<0.039	G		G		mg/l
1,2-Diphenylhydrazine		G	<0.039	G		G		mg/l
Total Toxic Organics	5.52	--	2.772					mg/l
Lab Dilution Factor			1					

METROPOLITAN ST. LOUIS SEWER DISTRICT
2010 INDUSTRIAL USER SELF MONITORING REPORT

PLEASE READ THE INSTRUCTIONS BEFORE COMPLETING THIS REPORT

PART I: IDENTIFYING INFORMATION

Company Name: Mallinckrodt Inc.

Permit No.: 2112059600 - 2.1

Premise Address: 3600 North Second St., St. Louis, MO 63147

Monitoring Period: _X__(JAN-MAR) ____(APR-JUNE) ____(JULY-SEPT) ____(OCT-DEC)

Samples Collected By: Mallinckrodt

Analysis Performed By: TEKLAB

Part II: ANALYTICAL RESULTS OF SELF MONITORING

MSD SAMPLE POINT REFERENCE NUMBERS	----->		011					
DATES ON WHICH SAMPLES WERE COLLECTED	----->							
TIMES AT WHICH SAMPLES WERE COLLECTED	----->							
PARAMETER	LIMIT	RECORD SAMPLE TYPES (G,C,M OR E) & RESULTS BELOW G=grab,C=composite,M=measured flow,E=estimated flow						UNITS
FLOW		E	*					gal/day
Oil & Grease	200	G						mg/l
Biochemical Oxygen Demand	****	G						mg/l
Chemical Oxygen Demand	****	G						mg/l
Total Suspended Solids	****	G						mg/l
Temperature	60	G						deg C
pH	5.5 - 11.5	G						S.U.
* No flow from this outfall during this reporting period.								
Lab Dilution Factor								

METROPOLITAN ST. LOUIS SEWER DISTRICT
2010 INDUSTRIAL USER SELF MONITORING REPORT

PLEASE READ THE INSTRUCTIONS BEFORE COMPLETING THIS REPORT

PART I: IDENTIFYING INFORMATION

Company Name: Mallinckrodt Inc.
Permit No.: 2112059600 - 2.1
Premise Address: 3600 North Second St., St. Louis, MO 63147
Monitoring Period: __X___(JAN-MAR) ____(APR-JUN) ____(JULY-SEP) _____(OCT-DEC)
Samples Collected By: Mallinckrodt Inc
Analysis Performed By: TEKLAB

Part II: ANALYTICAL RESULTS OF SELF MONITORING

MSD SAMPLE POINT REFERENCE NUMBERS			---->		**080**				
DATES ON WHICH SAMPLES WERE COLLECTED			---->		2/4/2010				
TIMES AT WHICH SAMPLES WERE COLLECTED			---->		**0950, 1050, 1150, 1250**				
PARAMETER	EPA METHOD	DAILY MAX	AVG MONTHLY	**RECORD SAMPLE TYPES (G, C, M OR E) & RESULTS BELOW** G=Grab, C-composite, M=measured flow, E=estimated flow					UNITS
FLOW				E	**3,500**				**gal/day**
Acetone	524.2	20.70	8.20	G	<1.000				mg/L
n-Amyl Acetate	1666	20.70	8.20	G	<0.100				mg/L
Benzene	524.2	3.00	0.70	G	<0.100				mg/L
n-Butyl acetate	1666	20.70	8.20	G	<0.100				mg/L
Chlorobenzene	524.2	3.00	0.70	G	<0.100				mg/L
Chloroform	524.2	0.10	0.03	G	0.017				mg/L
1,2-Dichlorobenzene	524.2	20.70	8.20	G	<0.100				mg/L
1,2-Dichloroethane	524.2	20.70	8.20	G	<0.100				mg/L
Diethyl amine	1671	255.00	100.00	G	<50				mg/L
Ethyl Acetate	1666	20.70	8.20	G	<0.200				mg/L
n-Heptane	1666	3.00	0.70	G	<0.200				mg/L
n-Hexane	1666	3.00	0.70	G	<0.200				mg/L
Isobutyraldehyde	1666	20.70	8.20	G	<0.200				mg/L
Isopropyl acetate	1666	20.70	8.20	G	<0.100				mg/L
Isopropyl ether	1666	20.70	8.20	G	<0.100				mg/L
Methylene chloride	524.2	3.00	0.70	G	<0.100				mg/L
Methyl formate	1666	20.70	8.20	G	<1.000				mg/L
4-Methyl-2-pentanone	1666	20.70	8.20	G	<0.200				mg/L
Tetrahydrofuran	1666	9.20	3.40	G	<0.400				mg/L
Toluene	524.2	0.30	0.20	G	<0.100				mg/L
Triethyl amine	1671	255.00	100.00	G	<20				mg/L
Xylenes	1666	3.00	0.70	G	<0.100				mg/L
Oil & Grease	1664	200		G	5				mg/L
Biochemical Oxygen Demand		****		C	<5				mg/L
Chemical Oxygen Demand		****		C	24				mg/L
Total Suspended Solids		****		C	38				mg/L
Temperature		60		G	5				deg C
pH		5.5 - 11.5		G	9.0				S.U.
Dilution by lab					1, 20				

METROPOLITAN ST. LOUIS SEWER DISTRICT
2010 INDUSTRIAL USER SELF MONITORING REPORT

PLEASE READ THE INSTRUCTIONS BEFORE COMPLETING THIS REPORT

PART I: IDENTIFYING INFORMATION

Company Name: Mallinckrodt Inc.

Permit No.: 2112059600 - 2.1

Premise Address: 3600 North Second St., St. Louis, MO 63147

Monitoring Period: __X__(JAN-MAR) ____(APR-JUNE) ____ (JULY-SEPT) ___(OCT-DEC)

Samples Collected By: Mallinckrodt

Analysis Performed By: TEKLAB

Part II: ANALYTICAL RESULTS OF SELF MONITORING

MSD SAMPLE POINT REFERENCE NUMBERS ----->			080					
DATES ON WHICH SAMPLES WERE COLLECTED ----->			2/4/2010					
TIMES AT WHICH SAMPLES WERE COLLECTED ----->			0950, 1050, 1150, 1250					
PARAMETER	LIMIT	RECORD SAMPLE TYPES (G,C,M OR E) & RESULTS BELOW G=grab,C=composite,M=measured flow,E=es						UNITS
FLOW		E	3,500					gal/day
1,1,1-Trichloroethane		G	<0.005					mg/l
1,1,2,2-Tetrachloroethane		G	<0.005					mg/l
1,1,2-Trichloroethane		G	<0.005					mg/l
1,1-Dichloroethane		G	<0.005					mg/l
1,1-Dichloroethene		G	<0.005					mg/l
1,2-Dichlorobenzene		G	<0.005					mg/l
1,2-Dichloroethane		G	<0.005					mg/l
1,2-Dichloropropane		G	<0.005					mg/l
1,3-Dichlorobenzene		G	<0.005					mg/l
1,4-Dichlorobenzene		G	<0.005					mg/l
2-Chloroethylvinylether		G	<0.020					mg/l
Acrolein		G	<0.100					mg/l
Acrylonitrile		G	<0.005					mg/l
Benzene		G	<0.002					mg/l
Bromodichloromethane		G	0.0031					mg/l
Bromoform		G	<0.005					mg/l
Bromomethane		G	<0.010					mg/l
Carbon Tetrachloride		G	<0.005					mg/l
Chlorobenzene		G	<0.005					mg/l
Chloroethane		G	<0.010					mg/l
Chloroform		G	0.0173					mg/l
Chloromethane		G	<0.010					mg/l
cis-1,3-Dicholropropene		G	<0.005					mg/l
Dibromochloromethane		G	<0.005					mg/l
Ethylbenzene		G	<0.005					mg/l
Methylene Chloride		G	<0.005					mg/l
Tetrachloroethene		G	<0.005					mg/l
Toluene		G	<0.002					mg/l
trans-1,2-Dichloroethene		G	<0.005					mg/l
trans-1,3-Dichloropropene		G	<0.005					mg/l
Trichloroethene		G	<0.005					mg/l
Vinyl Chloride		G	<0.002					mg/l
1,2,4-Trichlorobenzene		G	<0.087					mg/l
2,4,6-Trichlorophenol		G	<0.087					mg/l
2,4-Dichlorophenol		G	<0.087					mg/l
2,4-Dimethylphenol		G	<0.087					mg/l
2,4-Dinitrophenol		G	<0.175					mg/l
2,4-Dinitrotoluene		G	<0.087					mg/l
2,6-Dinitrotoluene		G	<0.087					mg/l
2-Chloronapthalene		G	<0.087					mg/l
2-Chlorophenol		G	<0.087					mg/l
2-Nitrophenol		G	<0.175					mg/l
3,3-Dichlorobenzidine		G	<0.087					mg/l
2-Methyl-4,6-dinitrophenol		G	<0.175					mg/l
4-Bromophenyl-phenylether		G	<0.087					mg/l

METROPOLITAN ST. LOUIS SEWER DISTRICT
2010 INDUSTRIAL USER SELF MONITORING REPORT

PLEASE READ THE INSTRUCTIONS BEFORE COMPLETING THIS REPORT

PART I: IDENTIFYING INFORMATION

Company Name: Mallinckrodt Inc.

Permit No.: 2112059600 - 2.1

Premise Address: 3600 North Second St., St. Louis, MO 63147

Monitoring Period: __X__(JAN-MAR) ____(APR-JUNE) ____ (JULY-SEPT) ___(OCT-DEC)

Samples Collected By: Mallinckrodt

Analysis Performed By: TEKLAB

Part II: ANALYTICAL RESULTS OF SELF MONITORING

MSD SAMPLE POINT REFERENCE NUMBERS ----->			080					
DATES ON WHICH SAMPLES WERE COLLECTED ----->			2/4/2010					
TIMES AT WHICH SAMPLES WERE COLLECTED ----->			0950, 1050, 1150, 1250					
PARAMETER	LIMIT	RECORD SAMPLE TYPES (G,C,M OR E) & RESULTS BELOW G=grab,C=composite,M=measured flow,E=es						UNITS
FLOW		E	3,500					gal/day
4-Chloro-3-methylphenol		G	<0.175					mg/l
4-Chlorophenyl-phenylether		G	<0.087					mg/l
4-Nitrophenol		G	<0.175					mg/l
Acenapthene		G	<0.087					mg/l
Acenaphthylene		G	<0.087					mg/l
Anthracene		G	<0.087					mg/l
Benzidine		G	<0.087					mg/l
Benzo(a)anthracene		G	<0.087					mg/l
Benzo(a)pyrene		G	<0.087					mg/l
Benzo(b)fluoranthene		G	<0.087					mg/l
Benzo(g,h,i)perylene		G	<0.087					mg/l
Benzo(k)fluoranthene		G	<0.087					mg/l
Bis(2-chloroethoxy)methane		G	<0.087					mg/l
Bis(2-chloroethyl)ether		G	<0.087					mg/l
Bis(2-chloroisopropyl)ether		G	<0.087					mg/l
Bis(2-ethylhexyl)phthalate		G	<0.052					mg/l
Butyl benzyl phthalate		G	<0.087					mg/l
Chrysene		G	<0.087					mg/l
Dibenzo(a,h)anthracene		G	<0.087					mg/l
Diethyl phthalate		G	<0.087					mg/l
Dimethyl phthalate		G	<0.087					mg/l
Di-n-butyl phthalate		G	<0.087					mg/l
Di-n-octyl-phthalate		G	<0.087					mg/l
Fluoranthene		G	<0.087					mg/l
Fluorene		G	<0.087					mg/l
Hexachlorobenzene		G	<0.087					mg/l
Hexachlorobutadiene		G	<0.087					mg/l
Hexachlorocyclopentadiene		G	<0.175					mg/l
Hexachloroethane		G	<0.087					mg/l
Ideno(1,2,3-cd)pyrene		G	<0.087					mg/l
Isophorone		G	<0.087					mg/l
Naphthalene		G	<0.087					mg/l
Nitrobenzene		G	<0.087					mg/l
N-nitrosodimethylamine		G	<0.087					mg/l
N-nitrosodi-n-propylamine		G	<0.087					mg/l
N-nitrosodiphenylamine		G	<0.087					mg/l
Pentachlorophenol		G	<0.175					mg/l
Phenanthrene		G	<0.087					mg/l
Phenol		G	<0.040					mg/l
Pyrene		G	<0.087					mg/l
1,2-Diphenylhydrazine		G	<0.087					mg/l
Total Toxic Organics	5.52	--	5.518					mg/l
			1,20					

Sample Point 080 Building 98

Process/ Product	Pharmaceutical OCPSF Non-Regulated	Date Start	Date End	Wastewater Disposition	Wastewater Sample Date	OCPSF-Cyanide, Zinc, Lead	Pharmaceutical-Cyanide
Peptides							
Boc-Leuprolide (8050)	Pharmaceutical	01-05-10	01-06-10	Drum		n/a	No
		01-11-10	01-13-10				
		01-15-10	01-29-10				
		02-01-10	02-04-10				
		02-06-10	02-18-10				
		02-21-10	02-21-10				
		03-12-10	03-12-10				
		03-18-10	03-21-10				
		03-23-10	03-25-10				
		02-01-10	02-01-10	MSD	02-01-10	n/a	No
		02-03-10	02-04-10				
		02-07-10	02-09-10				
		02-11-10	02-11-10				
		02-17-10	02-18-10				
		02-21-10	02-23-10				
		03-02-10	03-05-10				
		03-08-10	03-09-10				
		03-14-10	03-18-10				
		03-21-10	03-21-10				
Fmoc-Leuprolide (7970)	Pharmaceutical	03-24-10	03-31-10	Drum		n/a	No

METROPOLITAN ST. LOUIS SEWER DISTRICT
2010 INDUSTRIAL USER SELF MONITORING REPORT

PLEASE READ THE INSTRUCTIONS BEFORE COMPLETING THIS REPORT

PART I: IDENTIFYING INFORMATION

Company Name: Mallinckrodt Inc.

Permit No.: 2112059600 - 2.1

Premise Address: 3600 North Second St., St. Louis, MO 63147

Monitoring Period: __X__(JAN-MAR) _____ (APR-JUNE) _____(JULY-SEPT) _____(OCT-DEC)

Samples Collected By: Mallinckrodt

Analysis Performed By: TEKLAB NOV

Part II: ANALYTICAL RESULTS OF SELF MONITORING

<RL

MSD SAMPLE POINT REFERENCE NUMBERS			---->	905				
DATES ON WHICH SAMPLES WERE COLLECTED			---->	2/3/2010				
TIMES AT WHICH SAMPLES WERE COLLECTED			---->	12:00				
PARAMETER	LIMIT (ave) (gm/day)	LIMIT (gm/day)	RECORD SAMPLE TYPES (G,C,M OR E) & RESULTS BELOW G=grab,C=composite,M=measured flow,E=estimated flow		Lab results mg/L			UNITS
FLOW			M	51,404				gal/day
1,2,4-Trichlorobenzene	137.24	555.98	G	3.89	0.020			gm/day
1,2-Dichlorobenzene	137.24	555.98	G	3.89	0.020			gm/day
1,3-Dichlorobenzene	99.43	266.09	G	3.89	0.020			gm/day
1,4-Dichlorobenzene	99.43	266.09	G	3.89	0.020			gm/day
2-Nitrophenol	45.51	161.75	G	7.78	0.040			gm/day
2-Methyl-4,6-dinitrophenol	54.62	193.96	G	7.78	0.040			gm/day
4-Nitrophenol	113.44	403.33	G	7.78	0.040			gm/day
Acenapthene	13.3	32.91	G	3.89	0.020			gm/day
Anthracene	13.3	32.91	G	3.89	0.020			gm/day
Bis(2-ethylhexyl)phthalate	66.52	180.66	G	2.33	0.012			gm/day
Diethyl phthalate	32.21	79.13	G	3.89	0.020			gm/day
Dimethyl phthalate	13.3	32.91	G	3.89	0.020			gm/day
Di-n-butyl phthalate	14	30.11	G	3.89	0.020			gm/day
Fluoranthene	15.4	37.81	G	3.89	0.020			gm/day
Fluorene	13.3	32.91	G	3.89	0.020			gm/day
Hexachlorobenzene	137.24	555.98	G	3.89	0.020			gm/day
Hexachlorobutadiene	99.43	266.09	G	3.89	0.020			gm/day
Hexachloroethane	137.24	555.98	G	3.89	0.020			gm/day
Naphthalene	13.3	32.91	G	3.89	0.020			gm/day
Phenanthrene	13.3	32.91	G	3.89	0.020			gm/day
Pyrene	14	33.61	G	3.89	0.020			gm/day
1,1,1-Trichloroethane*	15.4	41.31	G	243.21	1.250			gm/day
1,1,2-Trichloroethane*	22.4	88.93	G	243.21	1.250			gm/day
1,1-Dichloroethane*	15.4	41.31	G	243.21	1.250			gm/day
1,1-Dichloroethene*	15.4	41.31	G	243.21	1.250			gm/day
1,2-Dichloroethane*	126.04	401.93	G	243.21	1.250			gm/day
1,2-Dichloropropane*	137.24	555.98	G	243.21	1.250			gm/day
Benzene*	39.91	93.83	G	97.28	0.500			gm/day
Carbon Tetrachloride*	99.43	266.09	G	243.21	1.250			gm/day
Chlorobenzene*	99.43	266.09	G	243.21	1.250			gm/day
Chloroethane*	77.02	206.57	G	486.42	2.500			gm/day
Chloroform*	77.72	277.57	G	243.21	1.250			gm/day
Chloromethane*	77.02	277.57	G	486.42	2.500			gm/day
cis-1,3-Dichloropropene*	137.24	555.98	G	243.21	1.250			gm/day
Ethylbenzene*	99.43	266.09	G	243.21	1.250			gm/day
Methylene Chloride*	77.02	119.04	G	243.21	1.250			gm/day
Nitrobenzene*	1566.4	4482.84	G	2432.12	12.500			gm/day
Tetrachloroethene*	36.41	114.84	G	243.21	1.250			gm/day
Toluene*	19.61	51.82	G	243.21	1.250			gm/day
trans-1,2-Dichloroethene*	17.51	46.21	G	243.21	1.250			gm/day
trans-1,3-Dichloropropene*	137.24	555.98	G	243.21	1.250			gm/day
Trichloroethene*	18.21	48.32	G	243.21	1.250			gm/day
Vinyl Chloride*	67.92	120.44	G	97.28	0.500			gm/day
[illegible]								
[illegible] reporting limit due to sample composition.								
Lab Dilution Factor				2, 250				

METROPOLITAN ST. LOUIS SEWER DISTRICT
2010 INDUSTRIAL USER SELF MONITORING REPORT

PLEASE READ THE INSTRUCTIONS BEFORE COMPLETING THIS REPORT

PART I: IDENTIFYING INFORMATION

Company Name: Mallinckrodt Inc.

Permit No.: 2112059600 - 2.1

Premise Address: 3600 North Second St., St. Louis, MO 63147

Monitoring Period: __X___(JAN-MAR) ____(APR-JUNE) ____(JULY-SEPT) ____(OCT-DEC)

Samples Collected By: Mallinckrodt Inc

Analysis Performed By: TEKLAB

Part II: ANALYTICAL RESULTS OF SELF MONITORING

MSD SAMPLE POINT REFERENCE NUMBERS	----->		912					
DATES ON WHICH SAMPLES WERE COLLECTED	----->		See attached					
TIMES AT WHICH SAMPLES WERE COLLECTED	----->							
PARAMETER	LIMIT	RECORD SAMPLE TYPES (G,C,M OR E) & RESULTS BELOW G=grab,C=composite,M=measured flow,E=estimated flow						UNITS
FLOW		M	See attached					gal/day
DMAC (daily max)	7091	C	See attached					lb/day
DMAC (monthly average)	5459	C	See attached					lb/day
	*							
* Monitoring requirement only.								
Lab Dilution Factor			1					

DMAC Analysis and Mass Loadings - SP912				
1st Quarter 2010				Analysis by TEKLAB unless otherwise noted.
Date	Flow	DMAC		
	GPD	mg/l	lb/day	
January -10				
1/4/2010	72,139	1,900	1,164	
1/11/2010	65,594	1,500	836	
1/18/2010	88,018	1,500	1,121	
1/25/2010	86,620	1,700	1,250	
January Ave:			**1,093**	**lb/day**
Daily Max:			**1,250**	**lb/day**
February - 10				
2/1/2010	65,886	1,400	783	
2/8/2010	89,495	1,500	1,140	
2/15/2010	92,128	1,200	939	
2/16/2010	90,628	820	631	
2/22/2010	70,816	1,800	1,082	
February Ave:			**915**	**lb/day**
Daily Max:			**1,140**	**lb/day**
March - 10				
3/1/2010	84,206	1,400	1,001	
3/8/2010	66,832	1,200	681	
3/15/2010	89,087	730	552	
3/22/2010	39,880	1,300	440	
3/29/2010	85,660	1,300	946	
March Ave:			**669**	**lb/day**
Daily Max:			**1,001**	**lb/day**

METROPOLITAN ST. LOUIS SEWER DISTRICT
2010 INDUSTRIAL USER SELF MONITORING REPORT

PART I: IDENTIFYING INFORMATION

Company Name: **MALLINCKRODT INC.**
Permit No.: 2112059600 - 2.1 Effective Date: 07-01-2008 Expiration Date: 05-31-2010
Premise Address: 3600 North Second St., St. Louis, MO 63147
Monitoring Period: __X__(JAN-MAR) ____(APR-JUN) ____(JULY-SEP) ____(OCT-DEC)
Samples Collected By: Mallinckrodt Inc
Analysis Performed By: TEKLAB

Part II: ANALYTICAL RESULTS OF SELF MONITORING

MSD SAMPLE POINT REFERENCE NUMBERS ----->					915				
DATES ON WHICH SAMPLES WERE COLLECTED ----->					1/11/2010				
TIMES AT WHICH SAMPLES WERE COLLECTED ----->					12:45				
PARAMETER	EPA METHOD	DAILY MAX	AVG MONTHLY	RECORD SAMPLE TYPES (G, C, M OR E) & RESULTS BELOW G=Grab, C-composite, M=measured flow, E=estimated flow					UNITS
FLOW				E	20,000				gal/day
Acetone	524.2	20.70	8.20	G	0.330				mg/L
n-Amyl acetate	1666	20.70	8.20	G	<0.100				mg/L
Benzene	524.2	3.00	0.70	G	<0.100				mg/L
n-Butyl acetate	1666	20.70	8.20	G	<0.100				mg/L
Chlorobenzene	524.2	3.00	0.70	G	<0.100				mg/L
Chloroform	524.2	0.10	0.03	G	<0.020				mg/L
1,2-Dichlorobenzene	524.2	20.70	8.20	G	<0.100				mg/L
1,2-Dichloroethane	524.2	20.70	8.20	G	<0.100				mg/L
Diethyl amine 40	1671	255.00	100.00	G	<500*				mg/L
Ethyl Acetate	1666	20.70	8.20	G	<0.200				mg/L
n-Heptane	1666	3.00	0.70	G	<0.200				mg/L
n-Hexane	1666	3.00	0.70	G	<0.200				mg/L
Isobutyraldehyde	1666	20.70	8.20	G	0.066				mg/L
Isopropyl acetate	1666	20.70	8.20	G	<0.100				mg/L
Isopropyl ether	1666	20.70	8.20	G	<0.100				mg/L
Methylene chloride	524.2	3.00	0.70	G	<0.100				mg/L
Methyl formate	1666	20.70	8.20	G	<1				mg/L
4-Methyl-2-pentanone	1666	20.70	8.20	G	<0.200				mg/L
Tetrahydrofuran	1666	9.20	3.40	G	<0.400				mg/L
Toluene	524.2	0.30	0.20	G	<0.100				mg/L
Triethyl amine 15	1671	255.00	100.00	G	<500*				mg/L
Xylenes	1666	3.00	0.70	G	<0.100				mg/L
** Lab was unable to get the detection limits below the reporting limit for the Method 1671 compounds, which have a once/year monitoring requirement.*									
Dilution by lab					20				

METROPOLITAN ST. LOUIS SEWER DISTRICT
2010 INDUSTRIAL USER SELF MONITORING REPORT

PART I: IDENTIFYING INFORMATION

Company Name: **MALLINCKRODT INC.**
Permit No.: 2112059600 - 2.1 Effective Date: 07-01-2008 Expiration Date: 05-31-2010
Premise Address: 3600 North Second St., St. Louis, MO 63147
Monitoring Period: __X__(JAN-MAR) ____(APR-JUN) ____(JULY-SEP) ____(OCT-DEC)
Samples Collected By: Mallinckrodt Inc
Analysis Performed By: TEKLAB

Part II: ANALYTICAL RESULTS OF SELF MONITORING

MSD SAMPLE POINT REFERENCE NUMBERS			---->		**918**					
DATES ON WHICH SAMPLES WERE COLLECTED			---->							
TIMES AT WHICH SAMPLES WERE COLLECTED			---->							
PARAMETER	EPA METHOD	DAILY MAX	AVG MONTHLY	**RECORD SAMPLE TYPES (G, C, M OR E) & RESULTS BELOW G=Grab, C-composite, M=measured flow, E=estimated flow**						**UNITS**
FLOW				E	*					gal/day
Acetone	524.2	20.70	8.20	G						mg/L
Ethyl Acetate	1666	20.70	8.20	G						mg/L
Isopropyl acetate	1666	20.70	8.20	G						mg/L
Methylene chloride	524.2	3.00	0.70	G						mg/L
n-Amyl acetate	1666	20.70	8.20	G						mg/L
**** No flow this quarter***										
Dilution by lab										

METROPOLITAN ST. LOUIS SEWER DISTRICT
2010 INDUSTRIAL USER SELF MONITORING REPORT

PART I: IDENTIFYING INFORMATION

Company Name: **MALLINCKRODT INC.**
Permit No.: 2112059600 - 2.1 Effective Date: 07-01-2008 Expiration Date: 05-31-2010
Premise Address: 3600 North Second St., St. Louis, MO 63147
Monitoring Period: __X__(JAN-MAR) ____(APR-JUN) ____(JULY-SEP) ____(OCT-DEC)
Samples Collected By: Mallinckrodt Inc
Analysis Performed By: TEKLAB

Part II: ANALYTICAL RESULTS OF SELF MONITORING

MSD SAMPLE POINT REFERENCE NUMBERS			---->		920						
DATES ON WHICH SAMPLES WERE COLLECTED			---->		3/12/2010						
TIMES AT WHICH SAMPLES WERE COLLECTED			---->		8:50						
PARAMETER	EPA METHOD	DAILY MAX	AVG MONTHLY	RECORD SAMPLE TYPES (G, C, M OR E) & RESULTS BELOW G=Grab, C-composite, M=measured flow, E=estimated flow							UNITS
FLOW				E	22,000	E					gal/day
Tetrahydrofuran	1666	9.20	3.40	G	<0.400	G					mg/L
Toluene	524.2	0.30	0.20	G	<0.100	G					mg/L
Dilution by lab					20						

METROPOLITAN ST. LOUIS SEWER DISTRICT
2010 INDUSTRIAL USER SELF MONITORING REPORT

PART I: IDENTIFYING INFORMATION

Company Name: **MALLINCKRODT INC.**
Permit No.: 2112059600 - 2.1 Effective Date: 07-01-2008 Expiration Date: 05-31-2010
Premise Address: 3600 North Second St., St. Louis, MO 63147
Monitoring Period: __X__(JAN-MAR) ____(APR-JUN) ____(JULY-SEP) ____(OCT-DEC)
Samples Collected By: Mallinckrodt Inc
Analysis Performed By: TEKLAB

Part II: ANALYTICAL RESULTS OF SELF MONITORING

MSD SAMPLE POINT REFERENCE NUMBERS			---->		927							
DATES ON WHICH SAMPLES WERE COLLECTED			---->		3/23/2010							
TIMES AT WHICH SAMPLES WERE COLLECTED			---->		06:15							
PARAMETER	EPA METHOD	DAILY MAX	AVG MONTHLY	RECORD SAMPLE TYPES (G, C, M OR E) & RESULTS BELOW G=Grab, C-composite, M=measured flow, E=estimated flow								UNITS
FLOW				E	2,200							gal/day
Acetone	524.2	20.70	8.20	G	<1							mg/L
n-Amyl acetate	1666	20.70	8.20	G	<0.100							mg/L
Ethyl Acetate	1666	20.70	8.20	G	<0.200							mg/L
Isopropyl acetate	1666	20.70	8.20	G	<0.100							mg/L
Methylene chloride	524.2	3.00	0.70	G	<0.100							mg/L
Dilution by lab					20							

METROPOLITAN ST. LOUIS SEWER DISTRICT
2010 INDUSTRIAL USER SELF MONITORING REPORT

PLEASE READ THE INSTRUCTIONS BEFORE COMPLETING THIS REPORT

PART I: IDENTIFYING INFORMATION

Company Name: Mallinckrodt Inc.
Permit No.: 2112059600 - 2.1
Premise Address: 3600 North Second St., St. Louis, MO 63147
Monitoring Period: __X__(JAN-MAR) ____(APR-JUN) ____(JULY-SEP) _____(OCT-DEC)
Samples Collected By: Mallinckrodt Inc
Analysis Performed By: TekLab

Part II: ANALYTICAL RESULTS OF SELF MONITORING

MSD SAMPLE POINT REFERENCE NUMBERS			---->		930						
DATES ON WHICH SAMPLES WERE COLLECTED			---->		2/23/2010						
TIMES AT WHICH SAMPLES WERE COLLECTED			---->		11:04						
PARAMETER	EPA METHOD	DAILY MAX	AVG MONTHLY	RECORD SAMPLE TYPES (G, C, M OR E) & RESULTS BELOW G=Grab, C-composite, M=measured flow, E=estimated flow							UNITS
FLOW				E	2200						gal/day
Acetone	524.2	20.70	8.20	G	<1.000						mg/L
Ethyl Acetate	1666	20.70	8.20	G	<0.200						mg/L
Isopropyl acetate	1666	20.70	8.20	G	<0.100						mg/L
Methylene chloride	524.2	3.00	0.70	G	<0.100						mg/L
n-Amyl acetate	1666	20.70	8.20	G	<0.100						mg/L
Dilution by lab					20						

METROPOLITAN ST. LOUIS SEWER DISTRICT
2010 INDUSTRIAL USER SELF MONITORING REPORT

PLEASE READ THE INSTRUCTIONS BEFORE COMPLETING THIS REPORT

PART I: IDENTIFYING INFORMATION

Company Name: Mallinckrodt Inc.
Permit No.: **2112059600 - 2.1**
Premise Address: 3600 North Second St., St. Louis, MO 63147
Monitoring Period: __X__(JAN-MAR) ____(APR-JUN) ____(JULY-SEP) ____(OCT-DEC)
Samples Collected By: Mallinckrodt Inc
Analysis Performed By: TekLab

Part II: ANALYTICAL RESULTS OF SELF MONITORING

Deactivated on 12-01-2009.

MSD SAMPLE POINT REFERENCE NUMBERS ----->					932						
DATES ON WHICH SAMPLES WERE COLLECTED ----->											
TIMES AT WHICH SAMPLES WERE COLLECTED ----->											
PARAMETER	EPA METHOD	DAILY MAX	AVG MONTHLY	RECORD SAMPLE TYPES (G, C, M OR E) & RESULTS BELOW G=Grab, C-composite, M=measured flow, E=estimated flow							UNITS
FLOW				E	0						gal/day
Acetone	524.2	20.70	8.20	G	*						mg/L
Benzene	524.2	3.00	0.70	G	*						mg/L
Chlorobenzene	524.2	3.00	0.70	G	*						mg/L
Chloroform	524.2	0.10	0.03	G	*						mg/L
1,2-Dichlorobenzene	524.2	20.70	8.20	G	*						mg/L
1,2-Dichloroethane	524.2	20.70	8.20	G	*						mg/L
Ethyl Acetate	1666	20.70	8.20	G	*						mg/L
n-Hexane	1666	3.00	0.70	G	*						mg/L
Methylene chloride	524.2	3.00	0.70	G	*						mg/L
4-Methyl-2-pentanone	1666	20.70	8.20	G	*						mg/L
Tetrahydrofuran	1666	9.20	3.40	G	*						mg/L
Toluene	524.2	0.30	0.20	G	*						mg/L
Xylenes	1666	3.00	0.70	G	*						mg/L
Isobutyraldehyde	1666	20.70	8.20	G	*						mg/L
n-Amyl acetate	1666	20.70	8.20	G	*						mg/L
n-Butyl acetate	1666	20.70	8.20	G	*						mg/L
Isopropyl acetate	1666	20.70	8.20	G	*						mg/L
Isopropyl ether	1666	20.70	8.20	G	*						mg/L
n-Heptane	1666	3.00	0.70	G	*						mg/L
Methyl formate	1666	20.70	8.20	G	*						mg/L
Diethyl amine	1671	255.00	100.00	G	*						mg/L
Triethyl amine	1671	255.00	100.00	G	*						mg/L
**** No flow this quarter***											
Dilution by lab											

METROPOLITAN ST. LOUIS SEWER DISTRICT
2010 INDUSTRIAL USER SELF MONITORING REPORT

PLEASE READ THE INSTRUCTIONS BEFORE COMPLETING THIS REPORT

PART I: IDENTIFYING INFORMATION

Company Name: Mallinckrodt Inc.
Permit No.: **2112059600 - 2.1**
Premise Address: 3600 North Second St., St. Louis, MO 63147
Monitoring Period: __X__(JAN-MAR) ____(APR-JUN) ____(JULY-SEP) ____(OCT-DEC)
Samples Collected By: Mallinckrodt Inc
Analysis Performed By: TekLab

Part II: ANALYTICAL RESULTS OF SELF MONITORING

MSD SAMPLE POINT REFERENCE NUMBERS			---->		**933**							
DATES ON WHICH SAMPLES WERE COLLECTED			---->		3/8/2010							
TIMES AT WHICH SAMPLES WERE COLLECTED			---->		08:45							
PARAMETER	EPA **METHOD**	**DAILY MAX**	AVG **MONTHLY**	**RECORD SAMPLE TYPES (G, C, M OR E) & RESULTS BELOW** G=Grab, C-composite, M=measured flow, E=estimated flow								UNITS
FLOW				E	3,000							gal/day
Acetone	524.2	20.70	8.20	G	<1.000							mg/L
n-Amyl acetate	1666	20.70	8.20	G	<0.100							mg/L
Ethyl Acetate	1666	20.70	8.20	G	<0.200							mg/L
Isopropyl acetate	1666	20.70	8.20	G	<0.100							mg/L
Methylene chloride	524.2	3.00	0.70	G	<0.100							mg/L
Dilution by lab					20							

METROPOLITAN ST. LOUIS SEWER DISTRICT
2010 INDUSTRIAL USER SELF MONITORING REPORT

PLEASE READ THE INSTRUCTIONS BEFORE COMPLETING THIS REPORT

PART I: IDENTIFYING INFORMATION

Company Name: Mallinckrodt Inc.
Permit No.: 2112059600 - 2.1
Premise Address: 3600 North Second St., St. Louis, MO 63147
Monitoring Period: __X__(JAN-MAR) ____(APR-JUN) ____(JULY-SEP) ____(OCT-DEC)
Samples Collected By: Mallinckrodt Inc
Analysis Performed By:

Part II: ANALYTICAL RESULTS OF SELF MONITORING

MSD SAMPLE POINT REFERENCE NUMBERS			---->		935						
DATES ON WHICH SAMPLES WERE COLLECTED			---->								
TIMES AT WHICH SAMPLES WERE COLLECTED			---->								
PARAMETER	EPA METHOD	DAILY MAX	AVG MONTHLY	RECORD SAMPLE TYPES (G, C, M OR E) & RESULTS BELOW G=Grab, C-composite, M=measured flow, E=estimated flow							UNITS
FLOW				E	0						gal/day
Acetone	524.2	20.70	8.20	G	*						mg/L
Benzene	524.2	3.00	0.70	G	*						mg/L
Chlorobenzene	524.2	3.00	0.70	G	*						mg/L
Chloroform	524.2	0.10	0.03	G	*						mg/L
1,2-Dichlorobenzene	524.2	20.70	8.20	G	*						mg/L
1,2-Dichloroethane	524.2	20.70	8.20	G	*						mg/L
Ethyl Acetate	1666	20.70	8.20	G	*						mg/L
n-Hexane	1666	3.00	0.70	G	*						mg/L
Methylene chloride	524.2	3.00	0.70	G	*						mg/L
4-Methyl-2-pentanone	1666	20.70	8.20	G	*						mg/L
Tetrahydrofuran	1666	9.20	3.40	G	*						mg/L
Toluene	524.2	0.30	0.20	G	*						mg/L
Xylenes	1666	3.00	0.70	G	*						mg/L
Isobutyraldehyde	1666	20.70	8.20	G	*						mg/L
n-Amyl acetate	1666	20.70	8.20	G	*						mg/L
n-Butyl acetate	1666	20.70	8.20	G	*						mg/L
Isopropyl acetate	1666	20.70	8.20	G	*						mg/L
Isopropyl ether	1666	20.70	8.20	G	*						mg/L
n-Heptane	1666	3.00	0.70	G	*						mg/L
Methyl formate	1666	20.70	8.20	G	*						mg/L
Diethyl amine	1671	255.00	100.00	G	*						mg/L
Triethyl amine	1671	255.00	100.00	G	*						mg/L
**** No PEG flow this quarter***											
Dilution by lab											

METROPOLITAN ST. LOUIS SEWER DISTRICT
2010 INDUSTRIAL USER SELF MONITORING REPORT

PLEASE READ THE INSTRUCTIONS BEFORE COMPLETING THIS REPORT

PART I: IDENTIFYING INFORMATION

Company Name: Mallinckrodt Inc.
Permit No.: 2112059600 - 2.1
Premise Address: 3600 North Second St., St. Louis, MO 63147
Monitoring Period: __X__(JAN-MAR) ____(APR-JUN) ____(JULY-SEP) ____(OCT-DEC)
Samples Collected By: Mallinckrodt Inc
Analysis Performed By: TEKLAB

Part II: ANALYTICAL RESULTS OF SELF MONITORING

MSD SAMPLE POINT REFERENCE NUMBERS ----->					**936**						
DATES ON WHICH SAMPLES WERE COLLECTED ----->					1/4/2010						
TIMES AT WHICH SAMPLES WERE COLLECTED ----->					13:49						
PARAMETER	EPA METHOD	DAILY MAX	AVG MONTHLY	**RECORD SAMPLE TYPES (G, C, M OR E) & RESULTS** G=Grab, C-composite, M=measured flow, E=estimated flow							UNITS
FLOW				E	14,400						gal/day
Acetone	524.2	20.70	8.20	G	<1						mg/L
n-Amyl acetate	1666	20.70	8.20	G	<0.100						mg/L
Benzene	524.2	3.00	0.70	G	<0.100						mg/L
n-Butyl acetate	1666	20.70	8.20	G	<0.100						mg/L
Chlorobenzene	524.2	3.00	0.70	G	<0.100						mg/L
Chloroform*	524.2	0.10	0.03	G	<0.020						mg/L
1,2-Dichlorobenzene	524.2	20.70	8.20	G	<0.100						mg/L
1,2-Dichloroethane	524.2	20.70	8.20	G	<0.100						mg/L
Diethyl amine	1671	255.00	100.00	G	<50						mg/L
Ethyl Acetate	1666	20.70	8.20	G	0.618						mg/L
n-Heptane	1666	3.00	0.70	G	<0.200						mg/L
n-Hexane	1666	3.00	0.70	G	<0.200						mg/L
Isobutyraldehyde	1666	20.70	8.20	G	<0.200						mg/L
Isopropyl acetate	1666	20.70	8.20	G	0.728						mg/L
Isopropyl ether	1666	20.70	8.20	G	<0.100						mg/L
Methylene chloride	524.2	3.00	0.70	G	<0.100						mg/L
Methyl formate	1666	20.70	8.20	G	<1						mg/L
4-Methyl-2-pentanone	1666	20.70	8.20	G	<0.200						mg/L
Tetrahydrofuran	1666	9.20	3.40	G	<0.400						mg/L
Toluene	524.2	0.30	0.20	G	<0.100						mg/L
Triethyl amine	1671	255.00	100.00	G	<20						mg/L
Xylenes	1666	3.00	0.70	G	<0.100						mg/L
* Chloroform Results	Raw Water	SP936									
1/4/2010	20 mg/l	<0.020 mg/l									
Results above reported as the difference between SP936 and Raw Water.											
Dilution by lab					20						

METROPOLITAN ST. LOUIS SEWER DISTRICT
2010 INDUSTRIAL USER SELF MONITORING REPORT

PLEASE READ THE INSTRUCTIONS BEFORE COMPLETING THIS REPORT

PART I: IDENTIFYING INFORMATION

Company Name: Mallinckrodt Inc.
Permit No.: 2112059600 - 2.1
Premise Address: 3600 North Second St., St. Louis, MO 63147
Monitoring Period: __X__(JAN-MAR) ____(APR-JUN) ____(JULY-SEP) ____(OCT-DEC)
Samples Collected By: Mallinckrodt Inc
Analysis Performed By: TEKLAB

Part II: ANALYTICAL RESULTS OF SELF MONITORING

MSD SAMPLE POINT REFERENCE NUMBERS			---->		**937**						
DATES ON WHICH SAMPLES WERE COLLECTED			---->		3/12/2010						
TIMES AT WHICH SAMPLES WERE COLLECTED			---->		9:00						
PARAMETER	EPA METHOD	DAILY MAX	AVG MONTHLY	**RECORD SAMPLE TYPES (G, C, M OR E) & RESULTS BELOW** G=Grab, C-composite, M=measured flow, E=estimated flow							UNITS
FLOW				E	22,000						gal/day
Tetrahydrofuran	524.2	9.20	3.40	G	<0.400						mg/L
Toluene	524.2	0.30	0.20	G	<0.100						mg/L
Dilution by lab					20						

METROPOLITAN ST. LOUIS SEWER DISTRICT
2010 INDUSTRIAL USER SELF MONITORING REPORT

PLEASE READ THE INSTRUCTIONS BEFORE COMPLETING THIS REPORT

PART I: IDENTIFYING INFORMATION

Company Name: Mallinckrodt Inc.
Permit No.: 2112059600 - 2.1
Premise Address: 3600 North Second St., St. Louis, MO 63147
Monitoring Period: __X__(JAN-MAR) ____(APR-JUN) ____(JULY-SEP) ____(OCT-DEC)
Samples Collected By: Mallinckrodt Inc
Analysis Performed By: TekLab

Part II: ANALYTICAL RESULTS OF SELF MONITORING

MSD SAMPLE POINT REFERENCE NUMBERS			---->		**938**							
DATES ON WHICH SAMPLES WERE COLLECTED			---->		1/13/2010							
TIMES AT WHICH SAMPLES WERE COLLECTED			---->		07:30							
PARAMETER	EPA METHOD	DAILY MAX	AVG MONTHLY	**RECORD SAMPLE TYPES (G, C, M OR E) & RESULTS BELOW G=Grab, C-composite, M=measured flow, E=estimated flow**								UNITS
FLOW				E	3,000							gal/day
Acetone	524.2	20.70	8.20	G	<1							mg/L
n-Amyl acetate	1666	20.70	8.20	G	<0.100							mg/L
Ethyl Acetate	1666	20.70	8.20	G	<0.200							mg/L
Isopropyl acetate	1666	20.70	8.20	G	<0.100							mg/L
Methylene chloride	524.2	3.00	0.70	G	<0.100							mg/L
Dilution by lab					20							

TEKLAB, INC.

5445 HORSESHOE LAKE ROAD
COLLINSVILLE, ILLINOIS 62234

ENVIRONMENTAL TESTING LABORATORY

TEL: 618-344-1004
FAX: 618-344-1005

January 15, 2010

Lisa Meyer
Mallinckrodt Inc.
3600 N. 2nd St.
St. Louis, MO 63147
TEL: (314) 654-3374
FAX: (314) 654-1251

ACCREDITED IN ACCORDANCE WITH

NELAP Accredited #100226

RE: SP915

WorkOrder: 10010275

Dear Lisa Meyer:

TEKLAB, INC received 1 sample on 1/11/2010 1:35:00 PM for the analysis presented in the following report.

Samples are analyzed on an as received basis unless otherwise requested and documented. The sample results contained in this report relate only to the requested analytes of interest as directed on the chain of custody. IL ELAP and NELAP accredited fields of testing are indicated by the letters NELAP under the Certification column.

All quality control criteria applicable to the test methods employed for this project have been satisfactorily met and are in accordance with NELAP except where noted. The following report shall not be reproduced, except in full, without the written approval of Teklab, Inc.

If you have any questions regarding these tests results, please feel free to call.

Sincerely,

Heather A. White

Heather A. White
Project Manager
(618)344-1004 ex 20

TEKLAB, INC.

5445 HORSESHOE LAKE ROAD
COLLINSVILLE, ILLINOIS 62234

ENVIRONMENTAL TESTING LABORATORY

TEL: 618-344-1004
FAX: 618-344-1005

Client: Mallinckrodt Inc.
Project: SP915
LabOrder: 10010275
Report Date: 15-Jan-10

CASE NARRATIVE

Cooler Receipt Temp: 16.2 °C

State accreditations:

KS: NELAP #E-10347 | KY: UST #0073 | MO: DNR #00930 | AR: ADEQ #70-028-0

Qualifiers

DF - Dilution Factor	**B** - Analyte detected in the associated Method Blank	**C** - Client requested RL below PQL
RL - Reporting Limit	**J** - Analyte detected below reporting limits	**D** - Diluted out of sample
ND - Not Detected at the Reporting Limit	**R** - RPD outside accepted recovery limits	**E** - Value above quantitation range
Surr - Surrogate Standard added by lab	**S** - Spike Recovery outside accepted recovery limits	**H** - Holding time exceeded
TNTC - Too numerous to count (> 200 CFU)	**X** - Value exceeds Maximum Contaminant Level	**MI** - Matrix interference
Q - QC criteria failed or noncompliant CCV	**#** - Unknown hydrocarbon	**DNI** - Did not ignite
NELAP - IL ELAP and NELAP Accredited Field of Testing	**IDPH** - IL Dept. of Public Health	

TEKLAB, INC.

5445 HORSESHOE LAKE ROAD
COLLINSVILLE, ILLINOIS 62234

ENVIRONMENTAL TESTING LABORATORY

TEL: 618-344-1004
FAX: 618-344-1005

LABORATORY RESULTS

Client: Mallinckrodt Inc.
WorkOrder: 10010275
Lab ID: 10010275-001
Report Date: 15-Jan-10

Client Project: SP915
Client Sample ID: SP915
Collection Date: 1/11/2010 12:45:00 PM
Matrix: AQUEOUS

Analyses	Certification	RL	Qual	Result	Units	DF	Date Analyzed	Analyst
EPA 600 1666A, VOLATILE ORGANIC COMPOUNDS BY GC/MS								
4-Methyl-2-pentanone		200		**ND**	µg/L	20	1/14/2010 1:36:00 AM	TAL
Butyl acetate		100		**ND**	µg/L	20	1/14/2010 1:36:00 AM	TAL
Diisopropyl ether		100		**ND**	µg/L	20	1/14/2010 1:36:00 AM	TAL
Ethyl acetate		200		**ND**	µg/L	20	1/14/2010 1:36:00 AM	TAL
Isobutyraldehyde		200	J	**52**	µg/L	20	1/14/2010 1:36:00 AM	TAL
Isopropyl acetate		100		**ND**	µg/L	20	1/14/2010 1:36:00 AM	TAL
m,p-Xylene		160		**ND**	µg/L	20	1/14/2010 1:36:00 AM	TAL
Methyl formate		1000		**ND**	µg/L	20	1/14/2010 1:36:00 AM	TAL
n-Amyl acetate		100		**ND**	µg/L	20	1/14/2010 1:36:00 AM	TAL
n-Heptane		200		**ND**	µg/L	20	1/14/2010 1:36:00 AM	TAL
n-Hexane		200		**ND**	µg/L	20	1/14/2010 1:36:00 AM	TAL
o-Xylene		100		**ND**	µg/L	20	1/14/2010 1:36:00 AM	TAL
Tetrahydrofuran		400		**ND**	µg/L	20	1/14/2010 1:36:00 AM	TAL
Surr: Bromofluorobenzene		70-130		**99.5**	%REC	20	1/14/2010 1:36:00 AM	TAL
Surr: Cyclohexane-d12		8-156		**97.3**	%REC	20	1/14/2010 1:36:00 AM	TAL
Surr: Ethyl acetate-C13		58-159		**114.8**	%REC	20	1/14/2010 1:36:00 AM	TAL
Surr: m-Xylene-d10		70-130		**100.8**	%REC	20	1/14/2010 1:36:00 AM	TAL
Surr: n-Heptane-d16		14-128		**95.7**	%REC	20	1/14/2010 1:36:00 AM	TAL
Surr: n-Hexane-d14		5-157		**94.9**	%REC	20	1/14/2010 1:36:00 AM	TAL
Surr: o-Xylene-d10		70-130		**99.4**	%REC	20	1/14/2010 1:36:00 AM	TAL
Surr: tert-Butanol-d10		40-160		**143.0**	%REC	20	1/14/2010 1:36:00 AM	TAL
Surr: Tetrahydrofuran-d8		42-178		**130.5**	%REC	20	1/14/2010 1:36:00 AM	TAL
EPA 600 1671A, PHARMACEUTICAL MANUFACTURING INDUSTRY NON-PURGEABLE VOLATILE ORGANICS								
Diethylamine		500	S	**ND**	mg/L	25	1/14/2010 7:54:00 PM	TV
Triethylamine		500		**ND**	mg/L	25	1/14/2010 7:54:00 PM	TV
EPA 600 524.2, VOLATILE ORGANIC COMPOUNDS BY GC/MS								
1,2-Dichlorobenzene		100		**ND**	µg/L	20	1/14/2010 1:36:00 AM	TAL
1,2-Dichloroethane		100		**ND**	µg/L	20	1/14/2010 1:36:00 AM	TAL
Acetone		1000	J	**330**	µg/L	20	1/14/2010 1:36:00 AM	TAL
Benzene		100		**ND**	µg/L	20	1/14/2010 1:36:00 AM	TAL
Chlorobenzene		100		**ND**	µg/L	20	1/14/2010 1:36:00 AM	TAL
Chloroform		20.0		**ND**	µg/L	20	1/14/2010 1:36:00 AM	TAL
Methylene chloride		100		**ND**	µg/L	20	1/14/2010 1:36:00 AM	TAL
Toluene		100		**ND**	µg/L	20	1/14/2010 1:36:00 AM	TAL
Surr: 1,2-Dichlorobenzene-d4		80-120		**105.5**	%REC	20	1/14/2010 1:36:00 AM	TAL
Surr: Bromofluorobenzene		80-120		**97.5**	%REC	20	1/14/2010 1:36:00 AM	TAL

TEKLAB, INC.

5445 HORSESHOE LAKE ROAD
COLLINSVILLE, ILLINOIS 62234

ENVIRONMENTAL TESTING LABORATORY

TEL: 618-344-1004
FAX: 618-344-1005

LABORATORY RESULTS

Client: Mallinckrodt Inc.
WorkOrder: 10010275
Lab ID: 10010275-001
Report Date: 15-Jan-10

Client Project: SP915
Client Sample ID: SP915
Collection Date: 1/11/2010 12:45:00 PM
Matrix: AQUEOUS

Analyses	Certification	RL	Qual	Result	Units	DF	Date Analyzed	Analyst

Sample Narrative

EPA 600 1671A, Pharmaceutical Manufacturing Industry Non-Purgeable Volatile Organics

Matrix interference present in sample.

Elevated reporting limit due to sample composition.

TEKLAB, INC.

5445 HORSESHOE LAKE ROAD
COLLINSVILLE, ILLINOIS 62234

ENVIRONMENTAL TESTING LABORATORY

TEL: 618-344-1004
FAX: 618-344-1005

RECEIVING CHECK LIST

Client: Mallinckrodt Inc.
Project: SP915
Lab Order: 10010275
Report Date: 15-Jan-10

Carrier: Marvin Darling II

Received By: DB

Completed by: Dawn Brantley
On: 11-Jan-10

Reviewed by: Heather A. White
On: 11-Jan-10

Pages to follow: Chain of custody 1 Extra pages included 0

Shipping container/cooler in good condition?	Yes ☑	No ☐	Not Present ☐	Temp °C 16.2
Type of thermal preservation?	None ☐	Ice ☑	Blue Ice ☐	Dry Ice ☐
Chain of custody present?	Yes ☑	No ☐		
Chain of custody signed when relinquished and received?	Yes ☑	No ☐		
Chain of custody agrees with sample labels?	Yes ☑	No ☐		
Samples in proper container/bottle?	Yes ☑	No ☐		
Sample containers intact?	Yes ☑	No ☐		
Sufficient sample volume for indicated test?	Yes ☑	No ☐		
All samples received within holding time?	Yes ☑	No ☐		
Reported field parameters measured:	Field ☐	Lab ☐	NA ☑	
Container/Temp Blank temperature in compliance?	Yes ☑	No ☐		

When thermal preservation is required, samples are compliant with a temperature between 0.1°C - 6.0°C, or when samples are received on ice the same day as collected.

Water - VOA vials have zero headspace?	Yes ☐	No ☑	No VOA vials ☐
Water - TOX containers have zero headspace?	Yes ☐	No ☐	No TOX containers ☑
Water - pH acceptable upon receipt?	Yes ☑	No ☐	

Any No responses must be detailed below or on the COC.

A significant amount of headspace was present in the volatile vials. Per client request, continue with analysis. DB 1/11/10.

CHAIN OF CUSTODY

pg. 1 of 1 Work Order # 1001027S

TEKLAB, INC. 5445 Horseshoe Lake Road ~ Collinsville, IL 62234 ~ Phone: (618) 344-1004 ~ Fax: (618) 344-1005

Client: Mallinckrodt
Address: 3600 N 2nd St
City / State / Zip: St Louis MO 63147
Contact: Lisa Meyer Phone: 314 654 3374
E-Mail: Fax:

Samples on: ☒ Ice ☐ Blue Ice ☐ No Ice 16.2 °C
Preserved in: ☐ Lab ☐ Field FOR LAB USE ONLY
Lab Notes: Handwrite bottle with date 1/11/10

Comments: RL - Reg Limit
If hexavalent, continue processing
Subpart C

Teklab, Inc.
Courier Pick Up

- Are these samples known to be involved in litigation? If yes, a surcharge will apply. ☐ Yes ☒ No
- Are these samples known to be hazardous? ☐ Yes ☒ No
- Are there any required reporting limits to be met on the requested analysis? If yes, please provide limits in comment section. ☒ Yes ☐ No

Project Name / Number: SP915
Sample Collector's Name: JB
Results Requested: ☑ Standard ☐ 1-2 Day (100% Surcharge) ☐ Other_____ ☐ 3 Day (50% Surcharge)
Billing Instructions:

Lab Use Only	Sample Identification	Date/Time Sampled	# and Type of Containers: UNPRES	HNO_3	NaOH	H_2SO_4	HCL	MeOH	$NaHSO_4$	Other	MATRIX: Water	Drinking Water	Soil	Sludge	Sp. Waste	INDICATE ANALYSIS REQUESTED: 524	1666	1671
1001027S-01	SP915	1/11/10 1245	2				4				X					X	X	X

Relinquished By	Date / Time	Received By	Date / Time
[illegible]	1/11/10 1245	Marvin L. Darling II	1/11/10 1245
Marvin L. Darling II	1/11/10 1335	[illegible]	1/11/10 1335

The individual signing this agreement on behalf of client acknowledges that he/she has read and understands the terms and conditions of this agreement, on the reverse side, and that he/she has the authority to sign on behalf of client.

WHITE & YELLOW – LAB PINK – SAMPLER'S COPY

MSD 011852

TEKLAB, INC.

5445 HORSESHOE LAKE ROAD
COLLINSVILLE, ILLINOIS 62234

ENVIRONMENTAL TESTING LABORATORY

TEL: 618-344-1004
FAX: 618-344-1005

February 04, 2010

Lisa Meyer
Mallinckrodt Inc.
3600 N. 2nd St.
St. Louis, MO 63147
TEL: (314) 654-3374
FAX: (314) 654-1251

ACCREDITED IN ACCORDANCE WITH

NELAP Accredited #100226

RE: BX

WorkOrder: 10020209

Dear Lisa Meyer:

TEKLAB, INC received 1 sample on 2/3/2010 5:05:00 PM for the analysis presented in the following report.

Samples are analyzed on an as received basis unless otherwise requested and documented. The sample results contained in this report relate only to the requested analytes of interest as directed on the chain of custody. IL ELAP and NELAP accredited fields of testing are indicated by the letters NELAP under the Certification column.

All quality control criteria applicable to the test methods employed for this project have been satisfactorily met and are in accordance with NELAP except where noted. The following report shall not be reproduced, except in full, without the written approval of Teklab, Inc.

If you have any questions regarding these tests results, please feel free to call.

Sincerely,

Heather A. White

Heather A. White
Project Manager
(618)344-1004 ex 20

TEKLAB, INC.

5445 HORSESHOE LAKE ROAD
COLLINSVILLE, ILLINOIS 62234

ENVIRONMENTAL TESTING LABORATORY

TEL: 618-344-1004
FAX: 618-344-1005

Client: Mallinckrodt Inc.
Project: BX
LabOrder: 10020209
Report Date: 04-Feb-10

CASE NARRATIVE

Cooler Receipt Temp: 7.2 °C

State accreditations:

KS: NELAP #E-10347 | KY: UST #0073 | MO: DNR #00930 | AR: ADEQ #70-028-0

Qualifiers

DF - Dilution Factor	**B** - Analyte detected in the associated Method Blank	**C** - Client requested RL below PQL
RL - Reporting Limit	**J** - Analyte detected below reporting limits	**D** - Diluted out of sample
ND - Not Detected at the Reporting Limit	**R** - RPD outside accepted recovery limits	**E** - Value above quantitation range
Surr - Surrogate Standard added by lab	**S** - Spike Recovery outside accepted recovery limits	**H** - Holding time exceeded
TNTC - Too numerous to count (> 200 CFU)	**X** - Value exceeds Maximum Contaminant Level	**MI** - Matrix interference
Q - QC criteria failed or noncompliant CCV	**#** - Unknown hydrocarbon	**DNI** - Did not ignite
NELAP - IL ELAP and NELAP Accredited Field of Testing	**IDPH** - IL Dept. of Public Health	

TEKLAB, INC.

5445 HORSESHOE LAKE ROAD
COLLINSVILLE, ILLINOIS 62234

ENVIRONMENTAL TESTING LABORATORY

TEL: 618-344-1004
FAX: 618-344-1005

LABORATORY RESULTS

Client: Mallinckrodt Inc.
WorkOrder: 10020209
Lab ID: 10020209-001
Report Date: 04-Feb-10

Client Project: BX
Client Sample ID: BX
Collection Date: 2/3/2010 12:00:00 PM
Matrix: AQUEOUS

Analyses	Certification	RL	Qual	Result	Units	DF	Date Analyzed	Analyst
SW-846 3510C, 8270C, SEMI-VOLATILE ORGANIC COMPOUNDS BY GC/MS								
1,2,4-Trichlorobenzene	NELAP	0.040		ND	mg/L	2	2/4/2010 12:59:00 PM	DMH
1,2-Dichlorobenzene	NELAP	0.040		ND	mg/L	2	2/4/2010 12:59:00 PM	DMH
1,3-Dichlorobenzene	NELAP	0.040		ND	mg/L	2	2/4/2010 12:59:00 PM	DMH
1,4-Dichlorobenzene	NELAP	0.040		ND	mg/L	2	2/4/2010 12:59:00 PM	DMH
2,4,5-Trichlorophenol	NELAP	0.040		ND	mg/L	2	2/4/2010 12:59:00 PM	DMH
2,4,6-Trichlorophenol	NELAP	0.040		ND	mg/L	2	2/4/2010 12:59:00 PM	DMH
2,4-Dichlorophenol	NELAP	0.040		ND	mg/L	2	2/4/2010 12:59:00 PM	DMH
2,4-Dimethylphenol	NELAP	0.040		ND	mg/L	2	2/4/2010 12:59:00 PM	DMH
2,4-Dinitrophenol	NELAP	0.080		ND	mg/L	2	2/4/2010 12:59:00 PM	DMH
2,4-Dinitrotoluene	NELAP	0.040		ND	mg/L	2	2/4/2010 12:59:00 PM	DMH
2,6-Dinitrotoluene	NELAP	0.040		ND	mg/L	2	2/4/2010 12:59:00 PM	DMH
2-Chloronaphthalene	NELAP	0.040		ND	mg/L	2	2/4/2010 12:59:00 PM	DMH
2-Chlorophenol	NELAP	0.040		ND	mg/L	2	2/4/2010 12:59:00 PM	DMH
2-Methylnaphthalene	NELAP	0.040		ND	mg/L	2	2/4/2010 12:59:00 PM	DMH
2-Nitroaniline	NELAP	0.160		ND	mg/L	2	2/4/2010 12:59:00 PM	DMH
2-Nitrophenol	NELAP	0.080		ND	mg/L	2	2/4/2010 12:59:00 PM	DMH
3,3'-Dichlorobenzidine	NELAP	0.040		ND	mg/L	2	2/4/2010 12:59:00 PM	DMH
3-Nitroaniline	NELAP	0.160		ND	mg/L	2	2/4/2010 12:59:00 PM	DMH
4,6-Dinitro-2-methylphenol	NELAP	0.080		ND	mg/L	2	2/4/2010 12:59:00 PM	DMH
4-Bromophenyl phenyl ether	NELAP	0.040		ND	mg/L	2	2/4/2010 12:59:00 PM	DMH
4-Chloro-3-methylphenol	NELAP	0.080		ND	mg/L	2	2/4/2010 12:59:00 PM	DMH
4-Chloroaniline	NELAP	0.080		ND	mg/L	2	2/4/2010 12:59:00 PM	DMH
4-Chlorophenyl phenyl ether	NELAP	0.040		ND	mg/L	2	2/4/2010 12:59:00 PM	DMH
4-Nitroaniline	NELAP	0.080		ND	mg/L	2	2/4/2010 12:59:00 PM	DMH
4-Nitrophenol	NELAP	0.080		ND	mg/L	2	2/4/2010 12:59:00 PM	DMH
Acenaphthene	NELAP	0.040		ND	mg/L	2	2/4/2010 12:59:00 PM	DMH
Acenaphthylene	NELAP	0.040		ND	mg/L	2	2/4/2010 12:59:00 PM	DMH
Anthracene	NELAP	0.040		ND	mg/L	2	2/4/2010 12:59:00 PM	DMH
Benzo(a)anthracene	NELAP	0.040		ND	mg/L	2	2/4/2010 12:59:00 PM	DMH
Benzo(a)pyrene	NELAP	0.040		ND	mg/L	2	2/4/2010 12:59:00 PM	DMH
Benzo(b)fluoranthene	NELAP	0.040		ND	mg/L	2	2/4/2010 12:59:00 PM	DMH
Benzo(g,h,i)perylene	NELAP	0.040		ND	mg/L	2	2/4/2010 12:59:00 PM	DMH
Benzo(k)fluoranthene	NELAP	0.040		ND	mg/L	2	2/4/2010 12:59:00 PM	DMH
Bis(2-chloroethoxy)methane	NELAP	0.040		ND	mg/L	2	2/4/2010 12:59:00 PM	DMH
Bis(2-chloroethyl)ether	NELAP	0.040		ND	mg/L	2	2/4/2010 12:59:00 PM	DMH
Bis(2-chloroisopropyl)ether	NELAP	0.040		ND	mg/L	2	2/4/2010 12:59:00 PM	DMH
Bis(2-ethylhexyl)phthalate	NELAP	0.024		ND	mg/L	2	2/4/2010 12:59:00 PM	DMH
Butyl benzyl phthalate	NELAP	0.040		ND	mg/L	2	2/4/2010 12:59:00 PM	DMH

TEKLAB, INC.

5445 HORSESHOE LAKE ROAD
COLLINSVILLE, ILLINOIS 62234

ENVIRONMENTAL TESTING LABORATORY

TEL: 618-344-1004
FAX: 618-344-1005

LABORATORY RESULTS

Client: Mallinckrodt Inc.
WorkOrder: 10020209
Lab ID: 10020209-001
Report Date: 04-Feb-10

Client Project: BX
Client Sample ID: BX
Collection Date: 2/3/2010 12:00:00 PM
Matrix: AQUEOUS

Analyses	Certification	RL	Qual	Result	Units	DF	Date Analyzed	Analyst
SW-846 3510C, 8270C, SEMI-VOLATILE ORGANIC COMPOUNDS BY GC/MS								
Carbazole	NELAP	0.080		**ND**	mg/L	2	2/4/2010 12:59:00 PM	DMH
Chrysene	NELAP	0.040		**ND**	mg/L	2	2/4/2010 12:59:00 PM	DMH
Dibenzo(a,h)anthracene	NELAP	0.040		**ND**	mg/L	2	2/4/2010 12:59:00 PM	DMH
Dibenzofuran	NELAP	0.040		**ND**	mg/L	2	2/4/2010 12:59:00 PM	DMH
Diethyl phthalate	NELAP	0.040		**ND**	mg/L	2	2/4/2010 12:59:00 PM	DMH
Dimethyl phthalate	NELAP	0.040		**ND**	mg/L	2	2/4/2010 12:59:00 PM	DMH
Di-n-butyl phthalate	NELAP	0.040		**ND**	mg/L	2	2/4/2010 12:59:00 PM	DMH
Di-n-octyl phthalate	NELAP	0.040		**ND**	mg/L	2	2/4/2010 12:59:00 PM	DMH
Fluoranthene	NELAP	0.040		**ND**	mg/L	2	2/4/2010 12:59:00 PM	DMH
Fluorene	NELAP	0.040		**ND**	mg/L	2	2/4/2010 12:59:00 PM	DMH
Hexachlorobenzene	NELAP	0.040		**ND**	mg/L	2	2/4/2010 12:59:00 PM	DMH
Hexachlorobutadiene	NELAP	0.040		**ND**	mg/L	2	2/4/2010 12:59:00 PM	DMH
Hexachlorocyclopentadiene	NELAP	0.080		**ND**	mg/L	2	2/4/2010 12:59:00 PM	DMH
Hexachloroethane	NELAP	0.040		**ND**	mg/L	2	2/4/2010 12:59:00 PM	DMH
Indeno(1,2,3-cd)pyrene	NELAP	0.040		**ND**	mg/L	2	2/4/2010 12:59:00 PM	DMH
Isophorone	NELAP	0.040		**ND**	mg/L	2	2/4/2010 12:59:00 PM	DMH
m,p-Cresol	NELAP	0.040		**ND**	mg/L	2	2/4/2010 12:59:00 PM	DMH
Naphthalene	NELAP	0.040		**ND**	mg/L	2	2/4/2010 12:59:00 PM	DMH
N-Nitroso-di-n-propylamine	NELAP	0.040		**ND**	mg/L	2	2/4/2010 12:59:00 PM	DMH
N-Nitrosodiphenylamine	NELAP	0.040		**ND**	mg/L	2	2/4/2010 12:59:00 PM	DMH
o-Cresol	NELAP	0.040		**ND**	mg/L	2	2/4/2010 12:59:00 PM	DMH
Pentachlorophenol	NELAP	0.080		**ND**	mg/L	2	2/4/2010 12:59:00 PM	DMH
Phenanthrene	NELAP	0.040		**ND**	mg/L	2	2/4/2010 12:59:00 PM	DMH
Phenol	NELAP	0.020		**ND**	mg/L	2	2/4/2010 12:59:00 PM	DMH
Pyrene	NELAP	0.040		**ND**	mg/L	2	2/4/2010 12:59:00 PM	DMH
Surr: 2,4,6-Tribromophenol		27.7-149	S	**190.0**	%REC	2	2/4/2010 12:59:00 PM	DMH
Surr: 2-Fluorobiphenyl		44.9-116	S	**168.7**	%REC	2	2/4/2010 12:59:00 PM	DMH
Surr: 2-Fluorophenol		10.6-78.7	S	**98.8**	%REC	2	2/4/2010 12:59:00 PM	DMH
Surr: Nitrobenzene-d5		41.4-104	S	**169.5**	%REC	2	2/4/2010 12:59:00 PM	DMH
Surr: Phenol-d5		9.04-52.9	S	**59.1**	%REC	2	2/4/2010 12:59:00 PM	DMH
Surr: p-Terphenyl-d14		23.5-114	S	**0**	%REC	2	2/4/2010 12:59:00 PM	DMH
SW-846 5030, 8260B, VOLATILE ORGANIC COMPOUNDS BY GC/MS								
1,1,1,2-Tetrachloroethane	NELAP	1250		**ND**	µg/L	250	2/3/2010 6:53:00 PM	CCF
1,1,1-Trichloroethane	NELAP	1250		**ND**	µg/L	250	2/3/2010 6:53:00 PM	CCF
1,1,2,2-Tetrachloroethane	NELAP	1250		**ND**	µg/L	250	2/3/2010 6:53:00 PM	CCF
1,1,2-Trichloro-1,2,2-trifluoroethane		5000		**ND**	µg/L	250	2/3/2010 6:53:00 PM	CCF
1,1,2-Trichloroethane	NELAP	1250		**ND**	µg/L	250	2/3/2010 6:53:00 PM	CCF
1,1-Dichloro-2-propanone		12500		**ND**	µg/L	250	2/3/2010 6:53:00 PM	CCF

TEKLAB, INC.

5445 HORSESHOE LAKE ROAD
COLLINSVILLE, ILLINOIS 62234

ENVIRONMENTAL TESTING LABORATORY

TEL: 618-344-1004
FAX: 618-344-1005

LABORATORY RESULTS

Client: Mallinckrodt Inc.
WorkOrder: 10020209
Lab ID: 10020209-001
Report Date: 04-Feb-10

Client Project: BX
Client Sample ID: BX
Collection Date: 2/3/2010 12:00:00 PM
Matrix: AQUEOUS

Analyses	Certification	RL	Qual	Result	Units	DF	Date Analyzed	Analyst
SW-846 5030, 8260B, VOLATILE ORGANIC COMPOUNDS BY GC/MS								
1,1-Dichloroethane	NELAP	1250		ND	µg/L	250	2/3/2010 6:53:00 PM	CCF
1,1-Dichloroethene	NELAP	1250		ND	µg/L	250	2/3/2010 6:53:00 PM	CCF
1,1-Dichloropropene	NELAP	1250		ND	µg/L	250	2/3/2010 6:53:00 PM	CCF
1,2,3-Trichlorobenzene	NELAP	1250		ND	µg/L	250	2/3/2010 6:53:00 PM	CCF
1,2,3-Trichloropropane	NELAP	1250		ND	µg/L	250	2/3/2010 6:53:00 PM	CCF
1,2,3-Trimethylbenzene		1250		ND	µg/L	250	2/3/2010 6:53:00 PM	CCF
1,2,4-Trichlorobenzene	NELAP	1250		ND	µg/L	250	2/3/2010 6:53:00 PM	CCF
1,2,4-Trimethylbenzene	NELAP	1250		ND	µg/L	250	2/3/2010 6:53:00 PM	CCF
1,2-Dibromo-3-chloropropane	NELAP	1250		ND	µg/L	250	2/3/2010 6:53:00 PM	CCF
1,2-Dibromoethane	NELAP	1250		ND	µg/L	250	2/3/2010 6:53:00 PM	CCF
1,2-Dichlorobenzene	NELAP	1250		ND	µg/L	250	2/3/2010 6:53:00 PM	CCF
1,2-Dichloroethane	NELAP	1250		ND	µg/L	250	2/3/2010 6:53:00 PM	CCF
1,2-Dichloropropane	NELAP	1250		ND	µg/L	250	2/3/2010 6:53:00 PM	CCF
1,3,5-Trimethylbenzene	NELAP	1250		ND	µg/L	250	2/3/2010 6:53:00 PM	CCF
1,3-Dichlorobenzene	NELAP	1250		ND	µg/L	250	2/3/2010 6:53:00 PM	CCF
1,3-Dichloropropane	NELAP	1250		ND	µg/L	250	2/3/2010 6:53:00 PM	CCF
1,4-Dichlorobenzene	NELAP	1250		ND	µg/L	250	2/3/2010 6:53:00 PM	CCF
1-Chlorobutane	NELAP	1250		ND	µg/L	250	2/3/2010 6:53:00 PM	CCF
2,2-Dichloropropane	NELAP	1250		ND	µg/L	250	2/3/2010 6:53:00 PM	CCF
2-Butanone	NELAP	6250		ND	µg/L	250	2/3/2010 6:53:00 PM	CCF
2-Chloroethyl vinyl ether	NELAP	5000		ND	µg/L	250	2/3/2010 6:53:00 PM	CCF
2-Chlorotoluene	NELAP	1250		ND	µg/L	250	2/3/2010 6:53:00 PM	CCF
2-Hexanone	NELAP	6250		ND	µg/L	250	2/3/2010 6:53:00 PM	CCF
2-Nitropropane	NELAP	12500		ND	µg/L	250	2/3/2010 6:53:00 PM	CCF
4-Chlorotoluene	NELAP	1250		ND	µg/L	250	2/3/2010 6:53:00 PM	CCF
4-Methyl-2-pentanone	NELAP	6250		ND	µg/L	250	2/3/2010 6:53:00 PM	CCF
Acetone	NELAP	6250		ND	µg/L	250	2/3/2010 6:53:00 PM	CCF
Acetonitrile	NELAP	12500		ND	µg/L	250	2/3/2010 6:53:00 PM	CCF
Acrolein	NELAP	25000		ND	µg/L	250	2/3/2010 6:53:00 PM	CCF
Acrylonitrile	NELAP	1250		ND	µg/L	250	2/3/2010 6:53:00 PM	CCF
Allyl chloride	NELAP	1250		ND	µg/L	250	2/3/2010 6:53:00 PM	CCF
Benzene	NELAP	500		ND	µg/L	250	2/3/2010 6:53:00 PM	CCF
Bromobenzene	NELAP	1250		ND	µg/L	250	2/3/2010 6:53:00 PM	CCF
Bromochloromethane	NELAP	1250		ND	µg/L	250	2/3/2010 6:53:00 PM	CCF
Bromodichloromethane	NELAP	1250		ND	µg/L	250	2/3/2010 6:53:00 PM	CCF
Bromoform	NELAP	1250		ND	µg/L	250	2/3/2010 6:53:00 PM	CCF
Bromomethane	NELAP	2500		ND	µg/L	250	2/3/2010 6:53:00 PM	CCF
Butyl acetate		6250		ND	µg/L	250	2/3/2010 6:53:00 PM	CCF

TEKLAB, INC.

5445 HORSESHOE LAKE ROAD
COLLINSVILLE, ILLINOIS 62234

ENVIRONMENTAL TESTING LABORATORY

TEL: 618-344-1004
FAX: 618-344-1005

LABORATORY RESULTS

Client: Mallinckrodt Inc.
WorkOrder: 10020209
Lab ID: 10020209-001
Report Date: 04-Feb-10

Client Project: BX
Client Sample ID: BX
Collection Date: 2/3/2010 12:00:00 PM
Matrix: AQUEOUS

Analyses	Certification	RL	Qual	Result	Units	DF	Date Analyzed	Analyst
SW-846 5030, 8260B, VOLATILE ORGANIC COMPOUNDS BY GC/MS								
Carbon disulfide	NELAP	1250		ND	µg/L	250	2/3/2010 6:53:00 PM	CCF
Carbon tetrachloride	NELAP	1250		ND	µg/L	250	2/3/2010 6:53:00 PM	CCF
Chlorobenzene	NELAP	1250		ND	µg/L	250	2/3/2010 6:53:00 PM	CCF
Chloroethane	NELAP	2500		ND	µg/L	250	2/3/2010 6:53:00 PM	CCF
Chloroform	NELAP	1250		ND	µg/L	250	2/3/2010 6:53:00 PM	CCF
Chloromethane	NELAP	2500		ND	µg/L	250	2/3/2010 6:53:00 PM	CCF
Chloroprene	NELAP	5000		ND	µg/L	250	2/3/2010 6:53:00 PM	CCF
cis-1,2-Dichloroethene	NELAP	1250		ND	µg/L	250	2/3/2010 6:53:00 PM	CCF
cis-1,3-Dichloropropene	NELAP	1250		ND	µg/L	250	2/3/2010 6:53:00 PM	CCF
cis-1,4-Dichloro-2-butene	NELAP	1250		ND	µg/L	250	2/3/2010 6:53:00 PM	CCF
Cyclohexanone		12500		ND	µg/L	250	2/3/2010 6:53:00 PM	CCF
Dibromochloromethane	NELAP	1250		ND	µg/L	250	2/3/2010 6:53:00 PM	CCF
Dibromomethane	NELAP	1250		ND	µg/L	250	2/3/2010 6:53:00 PM	CCF
Dichlorodifluoromethane	NELAP	2500		ND	µg/L	250	2/3/2010 6:53:00 PM	CCF
Ethyl acetate	NELAP	2500		ND	µg/L	250	2/3/2010 6:53:00 PM	CCF
Ethyl ether	NELAP	1250		ND	µg/L	250	2/3/2010 6:53:00 PM	CCF
Ethyl methacrylate	NELAP	1250		ND	µg/L	250	2/3/2010 6:53:00 PM	CCF
Ethylbenzene	NELAP	1250		ND	µg/L	250	2/3/2010 6:53:00 PM	CCF
Heptane		5000		ND	µg/L	250	2/3/2010 6:53:00 PM	CCF
Hexachlorobutadiene	NELAP	1250		ND	µg/L	250	2/3/2010 6:53:00 PM	CCF
Hexachloroethane	NELAP	2500		ND	µg/L	250	2/3/2010 6:53:00 PM	CCF
Iodomethane	NELAP	1250		ND	µg/L	250	2/3/2010 6:53:00 PM	CCF
Isopropylbenzene	NELAP	1250		ND	µg/L	250	2/3/2010 6:53:00 PM	CCF
m,p-Xylenes	NELAP	1250		ND	µg/L	250	2/3/2010 6:53:00 PM	CCF
Methacrylonitrile	NELAP	2500		ND	µg/L	250	2/3/2010 6:53:00 PM	CCF
Methyl acetate		1250		ND	µg/L	250	2/3/2010 6:53:00 PM	CCF
Methyl Methacrylate	NELAP	1250		ND	µg/L	250	2/3/2010 6:53:00 PM	CCF
Methyl tert-butyl ether	NELAP	500		ND	µg/L	250	2/3/2010 6:53:00 PM	CCF
Methylacrylate		2500		ND	µg/L	250	2/3/2010 6:53:00 PM	CCF
Methylene chloride	NELAP	1250		ND	µg/L	250	2/3/2010 6:53:00 PM	CCF
Naphthalene	NELAP	2500		ND	µg/L	250	2/3/2010 6:53:00 PM	CCF
n-Butylbenzene	NELAP	1250		ND	µg/L	250	2/3/2010 6:53:00 PM	CCF
n-Hexane		5000		ND	µg/L	250	2/3/2010 6:53:00 PM	CCF
Nitrobenzene	NELAP	12500		ND	µg/L	250	2/3/2010 6:53:00 PM	CCF
n-Propylbenzene	NELAP	1250		ND	µg/L	250	2/3/2010 6:53:00 PM	CCF
o-Xylene	NELAP	1250		ND	µg/L	250	2/3/2010 6:53:00 PM	CCF
Pentachloroethane	NELAP	5000		ND	µg/L	250	2/3/2010 6:53:00 PM	CCF
p-Isopropyltoluene	NELAP	1250		ND	µg/L	250	2/3/2010 6:53:00 PM	CCF

TEKLAB, INC.

5445 HORSESHOE LAKE ROAD
COLLINSVILLE. ILLINOIS 62234

ENVIRONMENTAL TESTING LABORATORY

TEL: 618-344-1004
FAX: 618-344-1005

LABORATORY RESULTS

Client: Mallinckrodt Inc.
WorkOrder: 10020209
Lab ID: 10020209-001
Report Date: 04-Feb-10

Client Project: BX
Client Sample ID: BX
Collection Date: 2/3/2010 12:00:00 PM
Matrix: AQUEOUS

Analyses	Certification	RL	Qual	Result	Units	DF	Date Analyzed	Analyst
SW-846 5030, 8260B, VOLATILE ORGANIC COMPOUNDS BY GC/MS								
Propionitrile	NELAP	12500		**ND**	µg/L	250	2/3/2010 6:53:00 PM	CCF
sec-Butylbenzene	NELAP	1250		**ND**	µg/L	250	2/3/2010 6:53:00 PM	CCF
Styrene	NELAP	1250		**ND**	µg/L	250	2/3/2010 6:53:00 PM	CCF
tert-Butylbenzene	NELAP	1250		**ND**	µg/L	250	2/3/2010 6:53:00 PM	CCF
Tetrachloroethene	NELAP	1250		**ND**	µg/L	250	2/3/2010 6:53:00 PM	CCF
Tetrahydrofuran	NELAP	5000		**ND**	µg/L	250	2/3/2010 6:53:00 PM	CCF
Toluene	NELAP	1250		**ND**	µg/L	250	2/3/2010 6:53:00 PM	CCF
trans-1,2-Dichloroethene	NELAP	1250		**ND**	µg/L	250	2/3/2010 6:53:00 PM	CCF
trans-1,3-Dichloropropene	NELAP	1250		**ND**	µg/L	250	2/3/2010 6:53:00 PM	CCF
trans-1,4-Dichloro-2-butene	NELAP	2500		**ND**	µg/L	250	2/3/2010 6:53:00 PM	CCF
Trichloroethene	NELAP	1250		**ND**	µg/L	250	2/3/2010 6:53:00 PM	CCF
Trichlorofluoromethane	NELAP	1250		**ND**	µg/L	250	2/3/2010 6:53:00 PM	CCF
Vinyl acetate	NELAP	2500		**ND**	µg/L	250	2/3/2010 6:53:00 PM	CCF
Vinyl chloride	NELAP	500		**ND**	µg/L	250	2/3/2010 6:53:00 PM	CCF
Xylenes, Total	NELAP	1250		**ND**	µg/L	250	2/3/2010 6:53:00 PM	CCF
Surr: 1,2-Dichloroethane-d4		74.7-129		**103.4**	%REC	250	2/3/2010 6:53:00 PM	CCF
Surr: 4-Bromofluorobenzene		86-119		**108.4**	%REC	250	2/3/2010 6:53:00 PM	CCF
Surr: Dibromofluoromethane		81.7-123		**104.6**	%REC	250	2/3/2010 6:53:00 PM	CCF
Surr: Toluene-d8		84.3-114		**96.5**	%REC	250	2/3/2010 6:53:00 PM	CCF

Sample Narrative

SW-846 3510C, 8270C, Semi-Volatile Organic Compounds by GC/MS

Surrogate recovery was outside QC limits due to matrix interference.

Elevated reporting limit due to high levels of target and/or non-target analytes.

SW-846 5030, 8260B, Volatile Organic Compounds by GC/MS

Elevated reporting limit due to sample composition.

TEKLAB, INC.

5445 HORSESHOE LAKE ROAD
COLLINSVILLE, ILLINOIS 62234

ENVIRONMENTAL TESTING LABORATORY

TEL: 618-344-1004
FAX: 618-344-1005

RECEIVING CHECK LIST

Client: Mallinckrodt Inc.
Project: BX
Lab Order: 10020209
Report Date: 04-Feb-10

Carrier: Tim Mathis

Received By: DB

Completed by: Elizabeth A. Hurley
On: 03-Feb-10

Reviewed by: Heather A. White
On: 04-Feb-10

Pages to follow: Chain of custody 1 Extra pages included 0

Shipping container/cooler in good condition?	Yes ☑	No ☐	Not Present ☐	Temp °C 7.2
Type of thermal preservation?	None ☐	Ice ☑	Blue Ice ☐	Dry Ice ☐
Chain of custody present?	Yes ☑	No ☐		
Chain of custody signed when relinquished and received?	Yes ☑	No ☐		
Chain of custody agrees with sample labels?	Yes ☑	No ☐		
Samples in proper container/bottle?	Yes ☑	No ☐		
Sample containers intact?	Yes ☑	No ☐		
Sufficient sample volume for indicated test?	Yes ☑	No ☐		
All samples received within holding time?	Yes ☑	No ☐		
Reported field parameters measured:	Field ☐	Lab ☐	NA ☑	
Container/Temp Blank temperature in compliance?	Yes ☑	No ☐		
When thermal preservation is required, samples are compliant with a temperature between 0.1°C - 6.0°C, or when samples are received on ice the same day as collected.				
Water - VOA vials have zero headspace?	Yes ☑	No ☐	No VOA vials ☐	
Water - TOX containers have zero headspace?	Yes ☐	No ☐	No TOX containers ☑	
Water - pH acceptable upon receipt?	Yes ☑	No ☐		

Any No responses must be detailed below or on the COC.

CHAIN OF CUSTODY

pg. ____ of ____ Work Order # 10020209

TEKLAB, INC. 5445 Horseshoe Lake Road ~ Collinsville, IL 62234 ~ Phone: (618) 344-1004 ~ Fax: (618) 344-1005

Client: Mallinckrodt
Address: 3600 N 2nd St
City / State / Zip: St Louis MO 63147
Contact: Lisa Meyer Phone: 314 654 3374
E-Mail: Fax:

Samples on: ☒ Ice ☐ Blue Ice ☐ No Ice 7.2 °C
Preserved in: ☐ Lab ☒ Field FOR LAB USE ONLY
Lab Notes: O'Neals Place
Comments:

1 DAY Teklab, Inc. Courier Pick Up

- Are these samples known to be involved in litigation? If yes, a surcharge will apply. ☐ Yes ☒ No
- Are these samples known to be hazardous? ☐ Yes ☒ No
- Are there any required reporting limits to be met on the requested analysis? If yes, please provide limits in comment section. ☒ Yes ☐ No

Project Name / Number: BX
Sample Collector's Name: JB
Results Requested: ☐ Standard ☒ 1-2 Day (100% Surcharge) ☐ Other_____ ☐ 3 Day (50% Surcharge)
Billing Instructions:

Lab Use Only	Sample Identification	Date/Time Sampled	# and Type of Containers: UNPRES	HNO_3	NaOH	H_2SO_4	HCL	MeOH	$NaHSO_4$	Other	MATRIX: Water	Drinking Water	Soil	Sludge	Sp. Waste	INDICATE ANALYSIS REQUESTED: VOA OCPSF	SVOA OCPSF
10020209-001	BX	2/3/10 1200	1				2				X					X	X

Relinquished By	Date / Time	Received By	Date / Time
[signature]	2/3/10 1625	[signature]	2-3-10 1625
[signature]	2-3-10 1705	[signature]	2-3-10 1705

The individual signing this agreement on behalf of client acknowledges that he/she has read and understands the terms and conditions of this agreement, on the reverse side, and that he/she has the authority to sign on behalf of client.

WHITE & YELLOW – LAB PINK – SAMPLER'S COPY

MSD 011861

SR

COVIDIEN

April 5, 2010

Mr. Jason Gill
Metropolitan St. Louis Sewer District
Department of Environmental Compliance
10 East Grand Avenue
St. Louis, MO 63147

Re: MSD Inspection – Follow up Information and Updated Industrial User Questionnaire Information
Permit No. 2112059600 -2.1

Dear Mr. Gill,

Attached is the Mallinckrodt Inc. St. Louis Plant's follow-up information as we discussed during your site visit in January and our updated Industrial User Questionnaire.

We would like to request a revision to the Wastewater Source and Category description to Sample Point 080 by changing the "sanitary" reference to "laboratory waste".

In October, 2009 construction was completed for a new Hazardous Waste Storage Building. The project title was C.B.2536 (Covidien/Mallinckrodt Inc – Hazardous Waste Storage Bldg 116 – Destrehan St). Site Address: 101-129 Angelrodt 63147. A sewer tie in connection was constructed for storm water only under MSD Reference number P-0028720-00.

The two certification statements regarding 439 Absence Certification & Once per Year Sampling and 439 Surrogate Recommendation & Certification have been created in one document and signed by the plant's Site Director per your request and is attached. The 439 Absence Certification & Once per Year paragraph references SP930. In our current permit, the annual sampling requirement for diethylamine and triethylamine is not required and therefore, we have removed the SP930 reference from the certification statement.

On March 30, 2010 we submitted a request for a permit modification to reduce the frequency of sampling at SP912. The following is our response to Scott Rehmer's question as to how DMAc waste to the sewer is controlled in the Ioversol process. In the Ioversol process there is a DMAc solvent recovery system. As a cost benefit to the process, approximately 65% of the solvent is recovered in this system to minimize purchases of fresh DMAc. The DMAc is captured for this recovery system by decanting

RECEIVED
APR 06 2010
DIVISION OF
ENVIRONMENTAL COMPLIANCE

COVIDIEN/MALLINCKRODT
3600 NORTH SECOND STREET
ST. LOUIS, MO 63147

TELEPHONE: 314-654-2000
FAX: 314-654-1251

COVIDIEN

off the DMAc from the top of the batch while pumping in water in the bottom of the tank. All of the decanted liquor is collected and sent to the DMAc recovery system. A minor amount of DMAc is also collected in another reaction step by condensing the vapors from the reactor and collecting them in a tank which is pumped to the recovery system. There is approximately 2% DMAc remaining when it reaches its final major purge point, which is the Nanofiltration system. Any DMAc entering the Nanofiltration step is sent to the sewer via SP912.

A maximum of 1000 gallons or 7840 pounds of DMAc is charged per day in the process. The average daily discharge amount based on the last five years of weekly data is 1621 pounds or 23% of our daily maximum limit, which would indicate an 80% recovery of DMAc. Based on this information, we are requesting a reduced monitoring frequency from weekly to quarterly.

Industrial User Questionnaire Updates

Section C – Water Consumption and Wastewater Discharges
Item 7 c. Haulers. This has been revised to include the amount of water hauled off site as a content of hazardous waste hauled off site for disposal. Page 3 has been amended and is attached.

The Wastewater Section for Section E, Attachment 6 has been revised to reflect modifications to the water balance.

The Priority Pollutant list was revised to reflect three pollutants that were identified incorrectly. Zinc, chloromethane and dimethylphthalate should be listed as they were in the previous application as KP or Known Present. Pages 5 and 6 have been amended as well as Attachment 8 and are attached.

If you have any questions or require more detailed information, please contact me at 314.654.3374.

Sincerely,

Lisa Meyer

Lisa Meyer
Senior HSE Engineer

cc: Mr. Scott Rehmer, MSD
enclosures

RECEIVED
APR 06 2010
DIVISION OF
ENVIRONMENTAL COMPLIANCE

COVIDIEN/MALLINCKRODT
3600 NORTH SECOND STREET
ST. LOUIS, MO 63147

TELEPHONE: 314-654-2000
FAX: 314-654-1251

COVIDIEN

439 Absence Certification & Once per Year Sampling

Based on the permittee's verification that all pollutants regulated under 40 CFR 439 Subpart B at sampling points 915, 935, and 936 are absent in the process wastewater discharged from pharmaceutical manufacturing operations, this permit requires sampling for those pollutants only once per year, with the results to be reported on the appropriate quarterly self-monitoring report. In addition, each quarterly self-monitoring report shall include a statement certifying that the determination on file, referenced by date, remains valid.

439 Surrogate Recommendation & Certification

Pursuant to the provisions of 40 CFR 439(1)(l) and (4) the District has accepted the permittee's recommendation to allow monitoring for surrogate pollutants at sampling points 920 and 937 in lieu of certain other pollutants regulated under 40 CFR 439, Subpart C, PSES. The permittee must maintain the documentation for this recommendation in the facility permit records. An updated recommendation shall be submitted to the District with each application for permit renewal and at any time, during the life of this permit, when changes in raw materials or processes or other factors could result in a change in the status of any pollutant for which monitoring, using a surrogate, has been allowed. In addition, each quarterly self-monitoring report shall include a statement certifying that the recommendation on file, referenced by date, remains valid.

I certify, since the last permit modification, that the above statements remain valid for the referenced wastewater outfalls at the St. Louis Plant.

Print or type name of signing official: Richard C. Proehl

Title: Site Director Telephone: 314.654.5816

Signature: Richard C. Proehl Date: 04/05/10

RECEIVED

APR 06 2010

DIVISION OF ENVIRONMENTAL COMPLIANCE

COVIDIEN/MALLINCKRODT
3600 NORTH SECOND STREET
ST. LOUIS, MO 63147

TELEPHONE: 314-654-2000
FAX: 314-654-1251

Company Name: Mallinckrodt Inc.
Premise Address: 3600 North Second Street

SECTION C - WATER CONSUMPTION AND WASTEWATER DISCHARGES

1. Raw Water Source(s): ☒ City of St. Louis Water Div. ☐ Surface water
☐ Missouri American Water Co. ☐ Private well
☐ Other municipal source _____ ☐ Other (describe) _____
☐ Hauled by contractor

2. Water Bill Addressee: Mallinckrodt Chemical PO Box 470158 3600 N 2nd St. St. Louis MO

3. Water Service Account Numbers: 349230-206290 (208 210 Mallinckrodt St)

4. List past twelve months water usage from:

				☒ Water Bills	☐ Other Sources
1st 3 mo period	9/15/08	through	12/15/08	126,338 Ccf	Ccf
2nd 3 mo period	12/15/08	through	3/15/09	176,415 Ccf	Ccf
3rd 3 mo period	3/15/09	through	6/15/09	159,255 Ccf	Ccf
4th 3 mo period	6/15/09	through	9/15/09	216,225 Ccf	Ccf

Water Bills and Other Sources Total: 678,233 Ccf = 1389913 GPD-calendar = 1389913 GPD-work

5. Describe any treatment or conditioning process performed on the raw water before use (list regeneration/reject water volume in 6h below):
Deionization and Soft Water Units

6. Identify all water uses within your facility:

Water Uses	Estimated Average Daily Use (Gal per workday)
a. Sanitary	85000
b. Irrigation & lawn watering	0
c. Non-contact cooling water	150000
d. Contact cooling water	0
e. Process water	819571
f. Plant & equipment washdown	50000
g. Boiler	200000
h. Regeneration/reject water	85342
i. Other uses	0
j. Total of USES (6a through 6h):	1389913

(6a through 6i must equal total at item 4)

7. Identify all water losses and wastewater discharges from your facility:

Water Uses	Estimated Average Daily Loss/Discharge (Gal per workday)
a. Municipal sewer	1209613
b. Watercourse, storm drain, surface	0
c. Haulers	550
d. Evaporation	175000
e. Contained in product	4750

f. Total of LOSSES & DISCHARGES: 1389913

(7a through 7e must equal total at 6j)

8. For each activity you listed in Sections B.1 and B.5, list the average water usage and average wastewater discharge per workday. Attach additional sheets, if needed. (Total Avg. Water Use must equal total for 6e)

Item No	Activity	Type of Discharge			Avg. Water Use (GPD)	Avg. Discharge to Mun Sewer (GPD)	Date when activity first commenced at this facility
		Cont	Batch	None			
	See Attachment 3	○	○	○			
		○	○	○			
		○	○	○			
		○	○	○			
		○	○	○			
		○	○	○			
		○	○	○			
		○	○	○			
				Total:			

RECEIVED
APR 0 6 2010
DIVISION OF
ENVIRONMENTAL COMPLIANCE

MSD 011865

Company Name: Mallinckrodt Inc.
Premise Address: 3600 North Second Street

SECTION E - WASTEWATER INFORMATION (Continued)

5. Describe the type of wastewater pretreatment you employ prior to each point for which you marked "Yes" in E.4

Ref. No.	Pretreatment System Description
	See Attachment 7

6. Does your facility have a written:

a. Spill control plan ? ◉ Yes ○ No
b. Waste minimization plan ? ◉ Yes ○ No
c. Solvent management plan ? ◉ Yes ○ No
d. Slug discharge control plan ? ◉ Yes ○ No

7. If any wastewater analyses have been performed on the wastewater discharges from your facility attach copies of the most recent data. Be sure to specify the locations from which the samples were collected. Attach sketches, plans, drawings, etc. as necessary. Permit renewal applications, only, may skip this item.

8. Priority Pollutant Information: Check one of the four boxes by each listed chemical to indicate whether it is: "Suspected Absent", "Known Absent", "Suspected Present" or "Known Present" ON YOUR PREMISE. Any chemical which is used in your manufacturing or service activity or is generated as a product or as a by-product should be marked "Known Present." Some pollutants are known by other names. Refer to the instruction booklet for synonyms for those pollutants which have an asterisk (*):

SA = "Suspected Absent" KA = "Known Absent" SP = "Suspected Present" KP = "Known Present"

Item No	PRIORITY POLLUTANT	SA	KA	SP	KP
1.	asbestos (fibrous)	○	○	○	◉
2.	cyanide (total)	○	○	○	◉
3.	antimony (total)	○	○	◉	○
4.	arsenic (total)	○	○	◉	○
5.	beryllium (total)	◉	○	○	○
6.	cadmium (total)	○	○	○	◉
7.	chromium (total)	○	○	○	◉
8.	copper (total)	○	○	○	◉
9.	lead (total)	○	○	○	◉
10.	mercury (total)	○	○	○	◉
11.	nickel (total)	○	○	○	◉
12.	selenium (total)	◉	○	○	○
13.	silver (total)	○	○	◉	○
14.	thallium (total)	◉	○	○	○
15.	zinc (total)	○	○	○	◉
16.	acenaphthene	◉	○	○	○
17.	acenaphthylene	◉	○	○	○
18.	acrolein	◉	○	○	○
19.	acrylonitrile	○	○	◉	○
20.	aldrin	◉	○	○	○
21.	anthracene	◉	○	○	○
22.	benzene	○	○	○	◉
23.	benzidine	○	○	◉	○
24.	benzo (a) anthracene *	◉	○	○	○
25.	benzo (a) pyrene	◉	○	○	○
26.	benzo (b) fluoranthene	◉	○	○	○
27.	benzo (g,h,i) perylene *	◉	○	○	○
28.	benzo (k) fluoranthene *	◉	○	○	○
29.	alpha-BHC	◉	○	○	○
30.	beta-BHC	◉	○	○	○
31.	delta-BHC	◉	○	○	○
32.	gamma-BHC *	◉	○	○	○
33.	bis (2-chloroethyl) ether *	◉	○	○	○
34.	bis (2-chloroethoxy) methane *	◉	○	○	○
35.	bis (2-chloroisopropyl) ether *	◉	○	○	○

Item No	PRIORITY POLLUTANT	SA	KA	SP	KP
36.	Reserved				
37.	bis (2-ethylhexyl) phthalate	○	○	○	◉
38.	bromodichloromethane *	○	○	◉	○
39.	bromoform *	◉	○	○	○
40.	bromomethane *	○	○	◉	○
41.	4-bromophenylphenyl ether	◉	○	○	○
42.	butylbenzyl phthalate	◉	○	○	○
43.	carbon tetrachloride *	○	○	○	◉
44.	chlordane	◉	○	○	○
45.	4-chloro-3-methylphenol *	◉	○	○	○
46.	chlorobenzene	○	○	○	◉
47.	chloroethane *	◉	○	○	○
48.	2-chloroethylvinyl ether	◉	○	○	○
49.	chloroform *	○	○	○	◉
50.	chloromethane *	○	○	○	◉
51.	2-chloronaphthalene	◉	○	○	○
52.	2-chlorophenol *	○	○	◉	○
53.	4-chlorophenylphenyl ether	◉	○	○	○
54.	chrysene *	◉	○	○	○
55.	4, 4'-DDD *	◉	○	○	○
56.	4, 4'-DDE *	◉	○	○	○
57.	4, 4'-DDT *	◉	○	○	○
58.	dibenzo (a,h) anthracene *	◉	○	○	○
59.	dibromochloromethane	○	○	◉	○
60.	1, 2-dichlorobenzene *	○	○	◉	○
61.	1, 3-dichlorobenzene *	○	○	◉	○
62.	1, 4-dichlorobenzene *	○	○	◉	○
63.	3, 3'-dichlorobenzidine	◉	○	○	○
64.	Reserved				
65.	1, 1-dichloroethane *	◉	○	○	○
66.	1, 2-dichloroethane *	○	○	◉	○
67.	1, 1-dichloroethene *	◉	○	○	○
68.	trans-1, 2-dichloroethene *	◉	○	○	○
69.	2, 4-dichlorophenol	◉	○	○	○
70.	1, 2-dichloropropane *	◉	○	○	○

RECEIVED
APR 06 2010
DIVISION OF
ENVIRONMENTAL COMPLIANCE

Company Name: Mallinckrodt Inc.
Premise Address: 3600 North Second Street

SECTION E - WASTEWATER INFORMATION (Continued)

Priority Pollutant Information (Continued)

SA = "Suspected Absent" KA = "Known Absent" SP = "Suspected Present" KP = "Known Present"

Item No	PRIORITY POLLUTANT	SA	KA	SP	KP
71.	(cis and trans) 1, 3-dichloropropene *	●	○	○	○
72.	dieldrin	●	○	○	○
73.	diethylphthalate *	○	○	●	○
74.	2, 4-dimethylphenol *	○	○	●	○
75.	dimethyl phthalate	○	○	○	●
76.	di-n-butyl phthalate	●	○	○	○
77.	di-n-octyl phthalate *	●	○	○	○
78.	4, 6-dinitro-2-methylphenol *	●	○	○	○
79.	2, 4-dinitrophenol	○	○	●	○
80.	2, 4-dinitrotoluene	○	○	●	○
81.	2, 6-dinitrotoluene	●	○	○	○
82.	1, 2-diphenylhydrazine *	●	○	○	○
83.	endosulfan I *	●	○	○	○
84.	endosulfan II *	●	○	○	○
85.	endosulfan sulfate	●	○	○	○
86.	endrin	●	○	○	○
87.	endrin aldehyde	●	○	○	○
88.	ethylbenzene	○	○	○	●
89.	fluoranthene	●	○	○	○
90.	fluorene *	●	○	○	○
91.	heptachlor	●	○	○	○
92.	heptachlor epoxide	●	○	○	○
93.	hexachlorobenzene *	●	○	○	○
94.	hexachlorobutadiene	○	○	●	○
95.	hexachlorocyclopentadiene *	●	○	○	○
96.	hexachloroethane *	●	○	○	○
97.	indeno (1, 2, 3-cd) pyrene *	●	○	○	○
98.	isophorone *	●	○	○	○
99.	methylene chloride *	○	○	○	●

Item No	PRIORITY POLLUTANT	SA	KA	SP	KP
100.	naphthalene	●	○	○	○
101.	nitrobenzene	○	○	●	○
102.	2-nitrophenol	○	○	●	○
103.	4-nitrophenol *	○	○	●	○
104.	N-nitrosodimethylamine *	○	○	●	○
105.	N-nitrosodi-n-propylamine *	●	○	○	○
106.	N-nitrosodiphenylamine	●	○	○	○
107.	PCB-1016 *	●	○	○	○
108.	PCB-1221 *	●	○	○	○
109.	PCB-1232 *	●	○	○	○
110.	PCB-1242 *	●	○	○	○
111.	PCB-1248 *	●	○	○	○
112.	PCB-1254 *	●	○	○	○
113.	PCB-1260 *	●	○	○	○
114.	pentachlorophenol	●	○	○	○
115.	phenanthrene	●	○	○	○
116.	phenol	○	○	○	●
117.	pyrene	●	○	○	○
118.	2, 3, 7, 8-tetrachlorodibenzo-p-dioxin *	○	●	○	○
119.	1, 1, 2, 2-tetrachloroethane *	○	○	○	●
120.	tetrachloroethene *	○	○	○	●
121.	toluene *	○	○	○	●
122.	toxaphene	●	○	○	○
123.	1, 2, 4-trichlorobenzene	●	○	○	○
124.	1, 1, 1-trichloroethane *	○	○	○	●
125.	1, 1, 2-trichloroethane *	○	○	○	●
126.	trichloroethene *	○	○	○	●
127.	Reserved				
128.	2, 4, 6-trichlorophenol	●	○	○	○
129.	vinyl chloride *	○	○	○	●

9. For priority pollutants in E.8, which are indicated "Known Present" or "Suspected Present", list and provide the following information for each: (Attach additional sheets, if needed.)

Item No.	PRIORITY POLLUTANT	HOW USED (for KP) or WHY SUSPECTED (for SP)	ANNUAL USAGE for KP(lbs)	LOSS TO SEWER for KP(lbs)
		See Attachment 8		

RECEIVED
APR 06 2010
DIVISION OF ENVIRONMENTAL COMPLIANCE

MSD 011867

Attachment 8

Priority Pollutants "Known Present" or "Suspected Present"

PRIORITY POLLUTANT ITEM NUMBER	PRIORITY POLLUTANT		HOW USED	ANNUAL USAGE (POUNDS)	LOSS TO SEWER, POUNDS PER YEAR
1	ASBESTOS	KP	EXISTING INSULATION	0	Unkown
2	CYANIDE	KP	LAB MATERIAL / PRODUCTION BYPRODUCT	0	<0.2
3	ANTIMONY	SP	CONTAMINANT	0	Unknown
4	ARSENIC	SP	CONTAMINANT	0	Unknown
6	CADMIUM	KP	EXISTING IN PAINTED SURFACES, CONTAMINANT	0	Unknown
7	CHROMIUM	KP	CONTAMINANT	0	Unknown
8	COPPER	KP	CONTAMINANT	0	Unknown
9	LEAD	KP	EXISTING IN PAINTED SURFACES	0	Unknown
10	MERCURY	KP	INSTRUMENTS	0	0
11	NICKEL	KP	CONTAMINANT	0	50
13	SILVER	SP	CONTAMINANT	0	Unknown
15	ZINC	KP	CONTAMINANT	0	Unknown
19	ACRYLONITRILE	SP	LAB MATERIAL	0	0
22	BENZENE	KP	LAB MATERIAL	0	1
23	BENZIDINE	SP	LAB MATERIAL	0	0
37	BIS (2 ETHYLHEXYL) PHTHALATE	KP	CONTAMINANT	0	10
38	BROMODICHLOROMETHANE	SP	LAB MATERIAL	0	0
40	BROMOMETHANE	SP	LAB MATERIAL	0	0
43	CARBON TETRACHLORIDE	KP	LAB MATERIAL	0	0
46	CHLOROBENZENE	KP	RAW MATERIAL	81000	8
49	CHLOROFORM	KP	RAW MATERIAL	297000	30
50	CHLOROMETHANE	KP	LAB MATERIAL	0	0
52	2-CHLOROPHENOL	SP	LAB MATERIAL	0	0
59	DIBROMOCHLOROMETHANE	SP	LAB MATERIAL	0	0
60	1,2-DICHLOROBENZENE	SP	LAB MATERIAL	0	0
61	1,3-DICHLOROBENZENE	SP	LAB MATERIAL	0	0
62	1,4-DICHLOROBENZENE	SP	LAB MATERIAL	0	0
66	1,2-DICHLOROETHANE	SP	LAB MATERIAL	0	0
73	DIETHYLPHTHALATE	SP	LAB MATERIAL	0	0

RECEIVED
APR 06 2010
DIVISION OF
ENVIRONMENTAL COMPLIANCE

NUMBER	PRIORITY POLLUTANT		HOW USED	ANNUAL USAGE (POUNDS)	LOSS TO SEWER, POUNDS PER YEAR
74	2,4-DIMETHYLPHENOL	SP	LAB MATERIAL	0	0
75	DIMETHYL PHTHALATE	KP	LAB MATERIAL	0	0
79	2,4-DINITROPHENOL	SP	LAB MATERIAL	0	0
80	2,4-DINITROTOLUENE	SP	LAB MATERIAL	0	0
88	ETHYL BENZENE	KP	CONTAMINANT	0	Unknown
94	HEXACHLOROBUTADIENE	SP	LAB MATERIAL	0	0
99	METHYLENE CHLORIDE	KP	RAW MATERIAL	234,000	94
101	NITROBENZENE	SP	LAB MATERIAL	0	0
102	2-NITROPHENOL	SP	LAB MATERIAL	0	0
103	4-NITROPHENOL	SP	LAB MATERIAL	0	0
104	N-NITROSODIMETHYLAMINE	SP	LAB MATERIAL	0	0
116	PHENOL	KP	LAB MATERIAL	0	0
119	1,1,2,2, TETRACHLOROETHANE	KP	LAB MATERIAL	0	0
120	TETRACHLOROETHANE	KP	LAB MATERIAL	0	0
121	TOLUENE	KP	RAW MATERIAL	1,375,000	275
124	1,1,1 TRICHLOROETHANE	KP	DEGREASING (SPRAY CANS)	0	1
125	1,1,2 TRICHLOROETHANE	KP	LAB MATERIAL	0	0
126	TRICHLOROETHENE	KP	CONTAMINANT	0	0
129	VINYL CHLORIDE	KP	CONTAMINANT	0	2.8

RECEIVED

APR 06 2010

DIVISION OF
ENVIRONMENTAL COMPLIANCE

MALLINCKRODT
2112-0596-00

SR

From: Scott Rehmer
Sent: Thursday, April 08, 2010 9:32 AM
To: 'Meyer, Lisa A'
Subject: RE: DMAc

Hi Lisa,

Thank you for your questionnaire and certification statements.
I spoke with Doug Mendoza regarding your DMAc sampling frequency. Because of the large potential impact from discharge of excessive DMAc, and the fact that DMAc discharge is controlled through solvent solvent recovery, versus limited simply through amount present in the production process, MSD cannot allow reduction of self-monitoring to only once per quarter. However, given Mallinckrodt's record of compliance, MSD can reduce self-monitoring to once per month.

Thank you.
Scott Rehmer

From: Scott Rehmer
Sent: Friday, March 05, 2010 7:39 AM
To: 'Meyer, Lisa A'
Subject: Permit renewal

Hi Lisa,

We (MSD) are preparing your renewal permit based on your questionnaire, which will be in effect on June 1, 2010.

There are two certifications in your past permits which I believe are still applicable to your facility, and that have been previously received by MSD. We are requesting an updated copy of these.

First, the one which applies to current **special cert C.2**.

439 Absence Certification & Once per Year Sampling

Based on the determination referenced above and on permittee's verification that all pollutants regulated under 40 CFR 439 Subpart B at sampling points 915, 930, 935, and 936 are absent in the process wastewater discharged from pharmaceutical manufacturing operations, this permit requires sampling for those pollutants only once per year, with the results to be reported on the appropriate quarterly self-monitoring report. In addition, each quarterly self-monitoring report shall include a statement certifying that the determination on file, referenced by date, remains valid.

Second, the one which applies to current **special cert C.3**.

439 Surrogate Recommendation & Certification

Pursuant to the provisions of 40 CFR 439(1)(l) and (4) the District has accepted the permittee's recommendation to allow monitoring for surrogate pollutants at sampling points 920 and 937 in lieu of certain other pollutants regulated under 40 CFR 439, Subpart C, PSES. The permittee must maintain the documentation for this

recommendation in the facility permit records. An updated recommendation shall be submitted to the District with each application for permit renewal and at any time, during the life of this permit, when changes in raw materials or processes or other factors could result in a change in the status of any pollutant for which monitoring, using a surrogate, has been allowed. In addition, each quarterly self-monitoring report shall include a statement certifying that the recommendation on file, referenced by date, remains valid.

Please submit a note with these two statements, if these conditions still apply, with the current date, so that we can include them in our industry files.

Thank you very much.

Scott M. Rehmer

Assistant Engineer

Environmental Compliance

Metropolitan St. Louis Sewer District

10 East Grand Avenue

St. Louis, MO 63147

Phone 314.436.8756

Fax 314.436.8753

Customer Service 314.768.6260

Email: srehmer@stlmsd.com

Metropolitan St. Louis Sewer District

Division of Environmental Compliance
10 East Grand Avenue
St. Louis, MO 63147-2913
Phone: 314.768.6200 www.stlmsd.com

April 6, 2010

Lisa Meyer
MALLINCKRODT
3600 North Second St.
St. Louis, MO 63147

Dear Ms. Meyer:

We have reviewed your application dated April 5, 2010 requesting approval to discharge 200 gallons of wastewater to the Metropolitan St. Louis Sewer District for treatment. This wastewater is a 50% ethylene glycol solution from the chiller system located west of the boiler house of the Mallinckrodt facility located at 3600 North Second Street, St. Louis, Missouri.

Based on the information you provided, this wastewater meets MSD Ordinance 12559 standards and is approved for discharge into a sanitary sewer on site. This approval is valid for 30 days from the date of this letter.

You must be certain the waste is discharged into a sanitary or combined sewer inlet only. This letter does not authorize any discharge to a separate storm sewer, or to any watercourse, as any such discharge would be in violation of state and federal laws. **Please notify me at the number below when the discharge is to commence, and please ensure the onsite personnel discharging the wastewater in question are provided with a copy of this letter.**

This discharge has been approved based upon the information and sample analysis you provided and is subject to the conditions stated above. This approval may be revoked by the District at any time if any of the information is found to be incorrect, or if the conditions of this approval are violated. Also, if the discharge causes any operational or maintenance problem within the District's collection or treatment system, or results in violations of any conditions of the District's NPDES permit, Mallinckrodt will be considered responsible for damages.

If you have any questions, please call me at (314) 436-8755.

Sincerely,
METROPOLITAN ST. LOUIS SEWER DISTRICT

Steven M. Grace

Steve Grace
Environmental Assistant Engineer

bv

pc: Nora Estopare

File: IU, MALLINCKRODT INC [2112059600]

C1A

SD EVALUATION CHECKLIST - ON SITE

APPLICATION INFORMATION

Source Name: Mallinckrodt Inc.

Premise Address: 3600 N. 2nd St.

Send approval letter to applicant

Evaluated by: SMG MCE 4/6/2010

Date: 4/6/10

Application Dated: 4/5/10 Received: 4/5/10 All Requested Info. Received: 4/6/10

SOURCE FILING/DESCRIPTION

1 - Source in PIMS? (Y) / N
2 - If No, on IU Cross-Ref list? * Y / N
3 - If No, MSD Account # from E-CIS? Y / N
4 - If none, on "Source" list (pre-IMS)? ** Y / N
5 - If No, assigned SOUR# from PIMS.

* o:\costrecovery\cross reference xls file

** o:\costrecovery\sourlist xls file

SOURCE TYPE (circle): (IU) / Dead IU / SD

INDUSTRY ID: 21120596-00

Sample Point: No. Assigned: 820 Description: 50% ethylene glycol solution from chiller system in boiler house

Normal WW flow from premise? (N/A) _____ ccf/month, _____ GPD, _____ GPH.

REGULATORY STATUS

Is waste a Hazardous Waste? (N) / Y

Categorical standards apply? (N) / Y

Contain PCB/ asbestos/ radioactive/ dioxin/ used oil? (N) / Y

Regulatory Agency Oversight? (N) / Y

DISCHARGE CONSIDERATIONS At MSD's connection:

Ordinance Limits (12559, p32) exceeded? (N) / Y

Ordinance other limits exceeded (dye, flash pt <140F, temp >140F, obstruction, nuisance foaming/odor, corrosion causing): (N) / Y

Water Quality Standard exceeded? (N) / Y

Fumes in sewer exceed PEL/TLV limits? (N) / Y

Vapors in sewer exceed 10% of LEL? (N) / Y

RECOMMENDATION: (APPROVE) / DENY (cc WWTP Mgr for timed discharge)

APPROVAL CONDITIONS:

Timed Discharge (COD/BOD/WQ/foam): (N) / Y Limit = _____ gal/hour

Require Treatment before Discharge? (N) / Y

Laboratory analysis fee due? (N) / Y $_____

SMR required? (N) / Y Frequency/analysis: _____

SMR log: (N/A) / Remediation.xls / Nonremediation.xls

Volume Billing applies (water unmetered or credited)? (N) / Y

Bill High Strength? (N) / Y Yes, If use >60,000 gal/month water ___and, > norm WW strgth

Surcharge calculation attached: (N/A) / N / Y

Expiration log updated: (N/A) / N / Y

O:\CostRecovery\Special Discharge\C1a.Checklist doc

COVIDIEN

Facsimile Communication

To: Mr. Steve Grace

Company: MSD Environmental Compliance

Fax Number: 314.436.8766

Date: April 5, 2010

Number of Pages *(including cover sheet)*: 9

Health, Safety, Environmental

Lisa Meyer
Senior HSE Engineer

Covidien/Mallinckrodt
3600 N. Second St.
St. Louis, Missouri 63147

Telephone 314-654-3374
Facsimile 314-654-1251

- ☐ For your information
- X Please respond
- ☐ Urgent
- ☐ Confidential

Comments:

Dear Mr. Grace,

Attached please find an application for the Special Discharge of a 50% ethylene glycol and water solution from the Boilerhouse Chiller Rental Unit. If you have any questions or need additional information, please contact me.

Thank you,

Lisa Meyer

Metropolitan St. Louis Sewer District

Phone No. (314) 436-8710
Division of Environmental Compliance, 10 East Grand Avenue, St. Louis, Missouri 63147 Fax No. (314) 436-8766

APPLICATION FOR SPECIAL DISCHARGE APPROVAL

I. WASTEWATER SOURCE IDENTIFICATION:

Site Name: Mallinckrodt
Premise Address: 3600 North 2nd St.
City: St. Louis State: MO Zip: 63147
Owner: Mallinckrodt
Contact Person: Lisa Meyer
Title: Senior HSE Engineer
Phone: 314.654.3374 Fax: 314.654.1251

II. APPLICANT (mailing information):

Applicant Name: Lisa Meyer
Title: Senior HSE Engineer
Company Name: Mallinckrodt
Mailing Address: 3600 North 2nd St.
City: St. Louis State: MO Zip: 63147
Phone: 314.654.3374 Fax: 314.654.1251

III. A. MATERIAL TO BE DISCHARGED (check all applicable boxes):

1. Wastewater description/location: Rental chiller west of Boilerhouse / ethylene glycol / water
2. Process/activity generating wastewater: Rental chiller to be removed from site but 250 feet of 6" hose is full of ethylene glycol and water.
3. Physical and chemical composition: List all constituents, and known or potentially present regulated contaminants below.
   ☐ See separate listing enclosed, and/or ☐ See analytical results enclosed, and/or ☑ Material Safety Data Sheet enclosed.

DESCRIPTION	RANGE	UNIT
Ethylene glycol	50	%
Water	50	%

DESCRIPTION *(continued)*	RANGE	UNIT

4. Is this wastewater from a process subject to EPA's categorical standards in 40 CFR Subchapter N? ☐ Yes ☑ No
   a. If yes, the applicable standards are in: 40 CFR Part _____, Subpart _____ ☐ Existing source ☐ New source
5. Does this wastewater contain polychlorinated biphenyls, asbestos or radioactive material? ☐ Yes ☑ No
   a. If yes, describe: _____
6. Representative sample: ☐ Laboratory results attached, and/or ☐ Sample provided (1/2 gallon minimum, clear container)
   a. Sample collection point/location: _____ Collection method: _____
   b. Sampler's name/Co.: _____ Sample date/time: _____
   c. Attach chain of custody as available
7. Discharge will occur over the following time period: ☑ < 30 days ☐ ≥ Two years ☐ Other: _____
   a. Expected total volume of wastewater to be discharged over the time period above: 250 Gallons
   b. Proposed discharge volume: 250 Gallons, at a frequency of: ☑ One time ☐ Daily ☐ Weekly ☐ Monthly ☐ Once/three months ☐ Once/six months ☑ Other: On 4/7/10 if possible
8. Pretreatment of wastewater prior to discharge: ☐ None ☑ Yes, describe: pH neutralization at main outfall 010.
   a. If yes, attach site plan, pretreatment system schematic, and design specifications.
9. Wastewater from a remediation project under: ☐ Superfund/CERCLA ☐ RCRA ☐ Voluntary program ☐ UST ☑ Not applicable
   a. If from a remediation project, briefly describe the past and present utilization of the property: _____

III.B. MATERIAL FROM UNDERGROUND STORAGE TANK SOURCE

☑ **Not applicable (go to Section IV)**

Please answer the following questions if you are requesting to discharge wastewater associated with an underground storage tank system.

1. a. Wastewater from: ☐ Inside UST(s) ☐ UST system pit ☐ Excavation outside UST system pit ☐ Monitoring well ☐ Groundwater remediation system

   b. UST project involves wastewater from: ☐ UST(s) closed in place ☐ UST(s) removed ☐ Remediation ☐ Upgrade ☐ Maintenance activities ☐ Well monitoring ☐ Other, explain: _____

   c. If wastewater is from a closure project, how long has UST(s) been out of service: _____ years

2. a. State assigned UST site identification number: _____ ☐ Not applicable

   b. Number of USTs affected: _____ ☐ Unknown

   c. For the UST(s) involved, their state identification number(s): _____ ☐ Not applicable

   d. Service Station Identification Number, as applicable: _____

3. Tank contents/former contents: ☐ Gasoline ☐ #2 diesel ☐ Used oil ☐ Unknown ☐ Other: _____

IV. DISCHARGE LOCATION

1. ☑ On-site. Describe proposed point of entry to sewer and the discharge rate (must be a sanitary or combined sewer): _____
Bakerhouse plant sewer to SP010. _____ Note: Range of discharge must not surcharge sewer line.

2. ☐ Haul to MSD Bissell Point Hauled Waste Receiving Station at 10 E. Grand, St. Louis, MO.

   a. Transporters Name: _____ and MSD Hauler ID Number: _____

   b. Hazardous Waste Certification:

   For wastewater which is hauled to MSD's Bissell Point Hauled Waste Receiving Station, I hereby certify that to the best of my knowledge and belief, the above hauled waste is not classified as a RCRA "hazardous waste" as defined by the MDNR in 10 CSR 25 or USEPA in 40 CFR Part 261.

   Applicant Name (print): _____

   Signature: _____ **Date:** _____

ADDITIONAL INFORMATION:

_____

_____

_____

_____

_____

_____

V. APPLICANT SIGNATURE AND CERTIFICATION

This application must be signed by the applicant: either the source contact, or a contractor or agent directly responsible for site activities.

I hereby certify that I am directly responsible for activities at the site regarding the wastewater to be discharged, and to the best of my knowledge and belief, based on appropriate inquiry, the information in this application is true, complete, and accurate. The samples or analyses submitted are representative of the materials to be discharged. If granted approval to discharge, I agree to abide by the MSD Ordinances, and all applicable federal, state and local regulations. I agree to pay the costs of any pre-approval analyses performed by MSD and to pay any applicable disposal charges for the volume and strength of the wastes discharged.

Applicant Name (print): Lisa Meyer

Signature: Lisa Meyer **Date:** 04/05/10

FOR MSD USE ONLY:

File Name: Mallinckrodt Inc. ID No. 2112D596-00 Sample Point No. B2D

SR

COVIDIEN

March 30, 2010

Mr. Doug Mendoza
Manager, Environmental Compliance
St. Louis Metropolitan Sewer District
10 East Grand Ave
St. Louis, MO 63147

RE: Request for Permit Modifications
MSD Permit 21120596 – 2.1

Dear Mr. Mendoza,

This letter is our formal request for a permit modification to remove unused sample points SP918 and SP932, and request less frequency monitoring for SP912 based on past analytical results.

✓ Sample Point SP918 – Building 235
This sample point was originally permitted as a PEG Subpart C discharge. As of third quarter 2003, all PEG wastewaters from Building 235 were sent to the PEG steam stripper (SP920). The sample point was modified with the June, 2005 permit to change the allowable discharge to PEG Subpart B (extraction products) only. Only a few processes in the Building can be labeled as extraction products. Since the permit modification in 2005, no extraction product wastewaters have been discharged through SP918. We do not foresee discharging through this sample point and therefore request the removal of this sample point from our permit.

✓ Sample Point SP932 – Miscellaneous Subpart C Discharge Point
This sample point was originally permitted as a PEG Subpart C discharge in 2004. It was designed to be a miscellaneous discharge point for special case situations. To date, this discharge point has not been used. We would like to request the deletion of this sample point as we will continue to use the Special Discharge Permit process to discharge any miscellaneous special case situation wastewaters.

RECEIVED
MAR 31 2010
DIVISION OF
ENVIRONMENTAL COMPLIANCE

COVIDIEN/MALLINCKRODT
3600 NORTH SECOND STREET
ST. LOUIS, MO 63147

TELEPHONE: 314-654-2000
FAX: 314-654-1251

COVIDIEN

Sample Point SP912 – Building 504

Our current permit requires that SP912 be sampled weekly for DMAC with mass based limits of 7091 pounds per day, daily maximum and 5459 pounds per day, monthly average. DMAC is generated from the contrast media Ioversol process in Building 504. I have attached the weekly analytical results from SP912 for the last five years. The results have never exceeded either the daily maximum or monthly average limits. The average DMAC result over the last five year is 1621 pounds per day or 23% of our daily maximum limit. Based on these results, we are requesting a reduced monitoring frequency from weekly to quarterly.

If you have any questions or need additional information, please contact me at 314.654.3374.

Sincerely,

Lisa Meyer

Lisa Meyer
Senior HSE Engineer

Enclosures

RECEIVED

MAR 31 2010

DIVISION OF
ENVIRONMENTAL COMPLIANCE

COVIDIEN/MALLINCKRODT
3600 NORTH SECOND STREET
ST. LOUIS, MO 63147

TELEPHONE: 314-654-2000
FAX: 314-654-1251

SP912 DMAc discharge
Samples from 2005 - Present

7091 lb/day daily limit
5459 lb/day monthly ave

Sample Date	Flow (gpd)	DMAc (mg/l)	DMAc #/day
3/15/10	89,086	730	552
3/8/10	66,832	1200	681
3/1/10	84,206	1400	1001
2/22/10	70,816	1800	1,082
2/16/10	90,628	820	631
2/15/10	92,128	1200	939
2/8/10	89,495	1500	1,140
2/1/10	65,886	1400	783
1/25/10	86,620	1700	1,250
1/18/10	88,018	1500	1,121
1/11/10	65,594	1500	836
1/4/10	72,139	1900	1,164
12/28/09	60,674	900	528
12/21/09	84,721	940	676
12/14/09	80,613	1300	2440
12/7/09	232,355	1400	2315
11/30/09	211,992	940	1692
11/23/09	177,977	1400	2116
11/16/09	196,610	1100	1724
11/9/09	220,939	1500	2515
11/2/09	5,833	1100	54
10/26/09	175,421	1200	1788
10/19/09	199,918	1300	2207
10/12/09	177,861	1700	2568
10/5/09	199,620	1100	1865
9/26/09	74,933	1300	827
9/19/09	320	160	0
9/14/09	84,978	940	678
9/7/09	163,979	1400	1949
8/31/09	194,959	1300	2152
8/24/09	197,769	830	1394
8/17/09	219,704	1200	2239
8/10/09	194,213	1100	1814
8/3/09	182,961	790	1227
7/27/09	204,268	1100	1908
7/20/09	137,620	1100	1286
7/13/09	61,107	980	509
7/6/09	72,145	81	50
6/29/09	61,462	910	475
6/22/09	37,498	25	8
6/15/09	202,777	1300	2239
6/8/09	173,745	1000	1475
6/1/09	173,403	1800	2651
5/25/09	215,398	1200	2195
5/18/09	111,059	1100	1037
5/11/09	167,981	1300	2216
5/4/09	82,782	1000	697
4/27/09	210,100	1400	2446

RECEIVED
MAR 31 2010
DIVISION OF
ENVIRONMENTAL COMPLIANCE

SP912 DMAc discharge
Samples from 2005 - Present

7091 lb/day daily limit
5459 lb/day monthly ave

Sample Date	Flow (gpd)	DMAc (mg/l)	DMAc #/day
4/20/09	61,107	970	531
4/19/09	110,527	910	285
4/12/09	160,078	1200	1806
4/6/09	183,522	1600	2118
3/30/09	120,701	1400	1435
3/16/09	182,938	1200	1864
3/9/09	208,424	940	1664
3/2/09	159,887	3400	4616
2/23/09	184,102	1500	2345
2/23/09	197,041	1100	1841
2/16/09	111,499	1500	1420
2/9/09	91,574	1200	933
2/2/09	128,388	1300	1417
1/26/09	55,438	1600	753
1/19/09	87,599	1400	1041
1/12/09	145,990	1200	1488
1/5/09	156,096	1200	1591
12/29/08	100,951	1700	1457
12/22/08	79,743	1200	813
12/15/08	68,222	940	545
12/8/08	105,496	1300	1165
12/1/08	67,575	1400	803
11/24/08	62,876	1400	748
11/17/08	75,272	1700	1087
11/10/08	65,795	1400	782
11/3/08	79,983	1400	951
10/27/08	53,422	1000	454
10/20/08	102,746	1900	1658
10/13/08	76,202	1000	647
10/6/08	84,033	1200	856
9/29/08	72,401	810	498
9/22/08	91,323	1,100	853
9/15/08	92,902	580	458
9/8/08	90,986	520	402
9/2/08	82,431	840	588
9/1/08	92,275	84	66
8/25/08	72,889	570	353
8/18/08	75,094	810	517
8/11/08	86,277	630	462
8/4/08	76,986	860	562
7/28/08	81,359	890	615
7/21/08	87,663	1100	819
7/14/08	85,028	970	700
7/7/08	87,128	1100	814
6/30/08	82,712	820	576
6/23/08	73,470	700	437
6/16/08	87,637	830	618
6/9/08	88,788	930	701

RECEIVED
MAR 31 2010
DIVISION OF
ENVIRONMENTAL COMPLIANCE

SP912 DMAc discharge
Samples from 2005 - Present

7091 lb/day daily limit
5459 lb/day monthly ave

Sample Date	Flow (gpd)	DMAc (mg/l)	DMAc #/day
6/2/08	219,779	630	1,176
5/26/08	196,659	1100	1,837
5/19/08	198,304	1200	2,021
5/12/08	148,941	1200	1,518
5/5/08	77,446	1300	969
4/28/08	83,551	1500	1,064
4/21/08	80,283	2500	1,703
4/14/08	87,686	2300	1,522
4/7/08	55,595	1400	384
3/31/08	39,539	1900	638
3/24/08	61,540	1900	993
3/17/08	71,152	950	574
3/10/08	65,908	2100	1,175
3/3/08	74,966	1500	955
2/25/08	74,327	730	461
2/23/08	58,973	250	125
2/20/08	60,821	2100	1,085
2/15/08	59,988	1600	815
2/11/08	64,469	1900	1,040
2/4/08	68,519	1500	873
1/28/08	65,275	1500	831
1/22/08	65,657	3900	2,174
1/21/08	49,788	2400	1,015
1/14/08	82,362	1500	1,049
1/7/08	69,302	1400	824
12/31/07	39,447	2000	670
12/24/07	6,240	1700	90
12/17/07	73,925	2000	1,256
12/10/07	62,988	1600	856
12/3/07	73,631	2700	1,688
11/26/07	57,366	2700	1,315
11/19/07	64,656	2100	1,153
11/12/07	67,609	1900	1,091
11/5/07	73,337	2200	1,370
10/29/07	51,669	3000	1,316
10/22/07	74,828	3400	2,160
10/15/07	70,031	1500	892
10/8/07	78,064	1600	1,061
10/1/07	83,489	1500	1,063
9/24/07	47,829	1400	569
9/17/07	183,729	1500	2,340
9/10/07	66,724	1200	680
9/3/07	82,140	1400	977
8/27/07	77,667	520	343
8/20/07	77,897	1800	1,191
8/13/07	81,780	1100	764
8/6/07	69,239	1000	588
7/30/07	89,829	1100	839

RECEIVED
MAR 3 1 2010
DIVISION OF
ENVIRONMENTAL COMPLIANCE

SP912 DMAc discharge
Samples from 2005 - Present

7091 lb/day daily limit
5459 lb/day monthly ave

Sample Date	Flow (gpd)	DMAc (mg/l)	DMAc #/day
7/23/07	75,671	950	610
7/16/07	141,564	1800	2,164
7/9/07	198,034	2100	3,532
7/2/07	109,135	4300	3,985
6/25/07	149,679	1800	2,288
6/18/07	145,361	2400	2,963
6/11/07	206,015	2100	3,674
6/4/07	197,039	1900	3,179
5/27/07	204,386	1600	2,777
5/20/07	181,282	1500	2,309
5/13/07	149,299	2000	2,536
5/6/07	181,219	1500	2,308
4/30/07	197,684	1800	2,701
4/23/07	162,075	2700	2,799
4/16/07	174,436	940	1,270
4/9/07	209,702	1200	1,931
4/2/07	187,399	1700	2,609
3/19/07	188,940	1300	2,086
3/12/07	128,663	1700	1,857
3/5/07	185,350	2300	3,620
2/26/07	142,519	1500	1,815
2/26/07	204,049	1900	3,292
2/19/07	187,665	2300	3,665
2/12/07	159,477	2400	3,250
2/5/07	165,883	1600	2,254
1/29/07	199,666	2100	3,561
1/22/07	193,809	1400	2,304
1/15/07	198,555	1500	2,529
1/8/07	158,079	300	403
1/1/07	59,358	1900	958
12/29/06	157,954	2400	3,219
12/26/06	146,323	4400	5,467
12/23/06	147,092	3200	3,997
12/18/06	145,666	2500	3,092
12/11/06	122,094	2000	2,074
12/4/06	103,694	1500	1,321
11/27/06	42,710	25	9
11/20/06	78,957	180	121
11/13/06	134,739	2100	2,403
11/6/06	137,034	1300	1,513
10/30/06	166,386	1200	1,696
10/23/06	146,578	1400	1,743
10/16/06	109,249	110	102
10/9/06	165,111	1100	1,542
10/2/06	184,867	800	1,256
9/25/06	167,007	1100	1,560
9/18/06	158,028	890	1,194
9/11/06	163,086	890	1,233

RECEIVED
MAR 31 2010
DIVISION OF
ENVIRONMENTAL COMPLIANCE

SP912 DMAc discharge
Samples from 2005 - Present

7091 lb/day daily limit
5459 lb/day monthly ave

Sample Date	Flow (gpd)	DMAc (mg/l)	DMAc #/day
9/4/06	174,743	1300	1,929
8/28/06	187,226	1600	2,544
8/21/06	194,039	880	1,450
8/14/06	109,958	160	149
8/10/06	243,893	850	1,760
8/3/06	196,553	820	1,369
7/27/06	177,981	1500	2,267
7/20/06	200,260	1300	2,211
7/13/06	151,213	2000	2,568
7/6/06	174,211	1600	2,367
6/29/06	176,797	1400	2,102
6/22/06	191,641	3600	5,859
6/15/06	149,389	2300	2,918
6/9/06	152,047	2600	3,357
6/5/06	144,435	290	356
6/1/06	34,253	250	73
5/29/06	114,653	1700	1,655
5/25/06	191,191	1400	2,273
5/18/06	200,492	1100	1,873
5/11/06	154,300	1600	2,096
5/4/06	152,454	2000	2,589
4/27/06	104,450	750	665
4/20/06	110,556	1800	1,690
4/13/06	137,107	2000	2,329
4/6/06	195,363	1900	3,152
3/31/06	138,415	2200	2,586
3/23/06	151,353	2100	2,699
3/16/06	139,684	1200	1,423
3/9/06	144,436	2000	2,453
3/3/06	116,076	2500	2,464
2/23/06	137,675	2800	3,274
2/16/06	81,981	1200	835
2/7/06	128,264	1500	1,796
2/2/06	145,733	2200	2,723
1/26/06	165,053	2500	3,504
1/19/06	148,026	2800	3,520
1/12/06	136,672	1600	1,857
1/5/06	97,247	2200	1,817
12/29/05	127,159	2000	2,160
12/22/05	126,812	2400	2,584
12/15/05	122,586	840	874
12/8/05	133,412	2000	2,266
12/1/05	148,153	2100	2,642
11/25/05	135,826	1700	1,961
11/17/05	120,050	1800	1,835
11/10/05	139,406	1600	1,894
11/3/05	145,833	2500	3,096
10/28/05	143,175	2100	2,553

RECEIVED
MAR 3 1 2010
DIVISION OF
ENVIRONMENTAL COMPLIANCE

SP912 DMAc discharge
Samples from 2005 - Present

7091 lb/day daily limit
5459 lb/day monthly ave

Sample Date	Flow (gpd)	DMAc (mg/l)	DMAc #/day
10/24/05	133,793	1900	2,159
10/18/05	139,577	860	1,019
10/15/05	160,578	5	7
10/10/05	163,563	2600	3,611
10/6/05	160,678	2600	3,548
10/1/05	101,331	25	22
9/15/05	163,508	1700	2,360
9/8/05	169,538	1900	2,735
9/1/05	155,725	750	992
8/26/05	107,284	200	182
8/25/05	123,419	77	81
8/18/05	144,200	1300	1,592
8/11/05	137,065	1700	1,979
8/4/05	150,769	1200	1,536
7/28/05	114,002	750	726
7/22/05	163,949	1000	1,392
7/14/05	103,094	1500	1,313
7/7/05	153,558	1300	1,695
6/30/05	146,599	1150	1,537
6/23/05	151,128	1000	1,378
6/16/05	167,852	1100	1,684
6/9/05	107,468	760	694
6/2/05	123,842	670	705
5/26/05	160,754	1,300	1,775
5/19/05	167,905	810	1,155
5/12/05	79,754	540	366
5/5/05	134,109	600	683
4/28/05	119,277	110	111
4/25/05	117,258	1,400	1,394
4/17/05	145,576	1,100	1,360
4/14/05	172,179	1,100	1,608
4/7/05	180,611	1,300	1,994
4/1/05	160,345	1,400	1,906
3/24/05	151,277	1100	1,517
3/17/05	128,474	3300	3,866
3/10/05	132,838	1300	1,466
3/3/05	161,906	1500	2,062
2/23/05	156,997	2,400	3,148
2/17/05	201,247	1,900	3,195
2/10/05	154,199	940	1,211
2/3/05	163,498	3,300	4,582
1/27/05	146,701	3,600	4,413
1/20/05	159,884	3,100	4,141
1/13/05	133,121	3,900	4,338
1/6/05	144,644	3,300	3,988
Average:	**126,479**	**1,480**	**1,621**

RECEIVED
MAR 3 1 2010
DIVISION OF
ENVIRONMENTAL COMPLIANCE

COVIDIEN

RECEIVED

MAR 10 2010

DIVISION OF
ENVIRONMENTAL COMPLIANCE

MARCH 8, 2010

Mr. Steve Grace
Metropolitan St. Louis Sewer District
Department of Environmental Compliance
10 East Grand Avenue
St. Louis, MO 63147-2913

RE: Special Discharge Follow-up - PERMIT NO. 2112059600-2.1

Dear Mr. Grace:

On February 10, 2010 an approval from MSD was received to discharge 5000 gallons of a 5% magnesium stearate and water solution from Building X.

On February 24, 2010 an estimated amount of 5000 gallons of a 5% magnesium stearate and water solution was discharged through plant sewers to the plant's neutralization system and to MSD.

If you have any questions or need additional information, please call me at 314.654.3374.

Sincerely,

Lisa Meyer

Lisa Meyer
Senior HSE Engineer

COVIDIEN/MALLINCKRODT
3600 NORTH SECOND STREET
ST. LOUIS, MO 63147

TELEPHONE: 314-654-2000
FAX: 314-654-1251

MISSOURI WATER ENVIRONMENT ASSOCIATION

Member of the
Water Environment Federation

2009 – 2010
MWEA
OFFICERS

President
Mary West
Jacobs
501 N Broadway
St. Louis, MO
(314)335-4511

President – Elect
Richard Johannes
URS CORPORATION
8300 College Blvd Suite 200
Overland Park, KS 66210
(913) 344-1079

Vice President
Jeffrey Clarke
HYDRO-KINETICS
5741 Manchester Ave.
St. Louis, MO 63110
(913) 344-1079

Secretary
Clara Haenchen
CITY OF JEFFERSON
320 East McCarty Street
Jefferson City, MO 65101
(573) 634-6566

Treasurer
Bob Januska
RJN GROUP
727 N. First Street
St. Louis, MO 63102
(314) 588-9764 ext 311

PWOD
Dave Erwin
CITY OF JEFFERSON
320 East McCarty Street
Jefferson City, MO 65101
(573) 634-6444

Delegate
Keith Arbuckle
DUCKETT CREEK
SANITARY DISTRICT
3550 Highway K
O'Fallon, MO 63368
(636) 441-1244

Delegate
Ken Gambaro
MSD-ST. LOUIS
3455 Creve Coeur Mill Rd
St. Louis, MO 63146
(314) 646-2431

March 2, 2010

Ms. Lisa Meyer
Mallinckrodt Inc
3600 N 2nd St
St. Louis, MO 63147

Re: **Missouri Water Environment Association Pretreatment Awards**

Dear Ms. Meyer:

The Missouri Water Environment Association (MWEA) is an organization dedicated to the advancement of practical knowledge in the technology, design, construction, safe operation and management of water quality control systems and facilities. MWEA's Industrial Waste Committee conducts an annual state-wide awards program to recognize industries for outstanding achievement in pretreatment. Your company has been nominated by your local pretreatment coordinator and chosen by the committee to receive a Gold Award certificate for pretreatment achievements during 2009. Award certificates will be presented at the Joint Annual Meeting of MWEA and the Missouri American Water Works Association to be held March 28-31, 2010, at Tan-Tar-A Resort, Osage Beach, Missouri, with award presentations scheduled during the MWEA Awards Lunch on Monday, March 29, at 12:00 PM.

Industrial Waste presentations on March 29, the equipment exhibit and other conference activities may also be of interest to you. We would be happy to have you visit with Committee members at the March 29 reception in the exhibit area between 5:00 PM and 6:30 PM. Look for the table with the Industrial Waste Committee sign. Program and registration information for the Annual Meeting is at www.mwea.org. Online registration is available. Awardees may register to attend one day of the conference at no charge, but meal tickets are not included. Awards Lunch tickets may also be purchased at the registration table.

We hope you will be able to attend the conference and receive your award in person. Please return the enclosed response form by March 15 so that we can reserve a place for you at the luncheon and announce your company's award. Certificates will be mailed to recipients unable to attend. If you would like a photograph of the award presentation, please bring a camera; a committee member will take a picture for you following the luncheon.

If you have any questions, please feel free to call me at (816) 325-7721 or Bill McAllister at (816) 822-3031.

Sincerely,

Dorris Bender
Industrial Waste Committee

Annual Meeting
March 28 – March 31, 2010
Visit our Web Site www.MWEA.org

Metropolitan St. Louis Sewer District

Division of Environmental Compliance
10 East Grand Avenue
St. Louis, MO 63147-2913
Phone: 314.768.6200 www.stlmsd.com

February 17, 2010

Shannon Brown
COVIDIEN/MALLINCKRODT INC.
385 Marshall Avenue
Webster Groves, MO 63119

Dear Ms. Brown:

We have reviewed your application dated February 15, 2010 requesting approval to discharge 200 gallons of wastewater to the Metropolitan St. Louis Sewer District for treatment. This wastewater is an Opadry/water solution used for pan coating generated at the Covidien/Mallinckrodt Inc. facility located at 385 Marshall Avenue, Webster Groves, Missouri. In a telephone conversation on February 17, 2010, you indicated pan coating is the process where the Opadry/water solution is used to coat pills or tablets, and becomes the hardened outer shell of the pill or tablet after application.

Based on the information you provided, this wastewater meets MSD Ordinance 12559 standards and is approved for discharge into a sanitary sewer on site. This approval is valid for 30 days from the date of this letter.

You must be certain the waste is discharged into a sanitary or combined sewer inlet only. This letter does not authorize any discharge to a separate storm sewer, or to any watercourse, as any such discharge would be in violation of state and federal laws. **Please notify me at the number below when the discharge is to commence, and please ensure the onsite personnel discharging the wastewater in question are provided with a copy of this letter.**

This discharge has been approved based upon the information and sample analysis you provided, and is subject to the conditions stated above. This approval may be revoked by the District at any time if any of the information is found to be incorrect, or if the conditions of this approval are violated. Also, if the discharge causes any operational or maintenance problem within the District's collection or treatment system, or results in violations of any conditions of the District's NPDES permit, Mallinckrodt Inc. will be considered responsible for damages.

If you have any questions, please call me at (314) 436-8755.

Sincerely,
METROPOLITAN ST. LOUIS SEWER DISTRICT

Steven M. Grace

Steve Grace
Environmental Assistant Engineer

bv

pc Nora Estopare

File: IU, MALLINCKRODT INC [1048568800], 385 Marshall Avenue, Webster Groves, MO

C1A

SD EVALUATION CHECKLIST - ON SITE

APPLICATION INFORMATION

Source Name: Covidien/Mallinckrodt Inc. Evaluated by: SMG 2/18/2010

Premise Address: 385 Marshall Ave. Date: 2/17/10

Send approval letter to applicant

Application Dated: 2/15/10 Received: 2/16/10 All Requested Info. Received: 2/17/10

SOURCE FILING/DESCRIPTION

1 - Source in PIMS? (Y) / N

2 - If No, on IU Cross-Ref list? * Y / N

3 - If No, MSD Account # from E-CIS? Y / N

4 - If none, on "Source" list (pre-IMS)? ** Y / N

5 - If No, assigned SOUR# from PIMS.

* o:\costrecovery\cross reference xls file

** o:\costrecovery\sourlist xls file

SOURCE TYPE (circle): (IU) / Dead IU / SD

INDUSTRY ID: 10485688-00

Sample Point: No. Assigned: 802 Description: Opadry/water solution used in pan coating process (becomes outer shell for pills/tablets

Normal WW flow from premise? N/A _____ ccf/month, 18,678 GPD, _____ GPH.

REGULATORY STATUS

Is waste a Hazardous Waste? (N) / Y

Categorical standards apply? (N) / Y

Contain PCB/ asbestos/ radioactive/ dioxin/ used oil? (N) / Y

Regulatory Agency Oversight? (N) / Y

DISCHARGE CONSIDERATIONS At MSD's connection:

Ordinance Limits (12559, p32) exceeded? (N) / Y

Ordinance other limits exceeded (dye, flash pt <140F, temp >140F, obstruction, nuisance foaming/odor, corrosion causing): (N) / Y

Water Quality Standard exceeded? (N) / Y

Fumes in sewer exceed PEL/TLV limits? (N) / Y

Vapors in sewer exceed 10% of LEL? (N) / Y

RECOMMENDATION: (APPROVE) / DENY (cc WWTP Mgr for timed discharge)

APPROVAL CONDITIONS:

Timed Discharge (COD/BOD/WQ/foam): (N) / Y Limit = _____ gal/hour

Require Treatment before Discharge? (N) / Y

Laboratory analysis fee due? (N) / Y $_____

SMR required? (N) / Y Frequency/analysis: _____

SMR log: (N/A) / Remediation.xls / Nonremediation.xls

Volume Billing applies (water unmetered or credited)? (N) / Y

Bill High Strength? (N) / Y Yes, If use >60,000 gal/month water ___and, > norm WW strgth

Surcharge calculation attached: (N/A) / N / Y

Expiration log updated: (N/A) / N / Y

O:\CostRecovery\Special Discharge\C1a.Checklist.doc

WCI Common Usage History (MDCU) - CMSD4010 - METROPOLITAN SEWER DISTRICT

File Edit Functions Go Path Help

Path | Current Account # 477916-1 | Name OWEN RIDGE ASSOCIATES

WCI Common Use

Premises # 10485688

Service Address 365 MARSHALL AVE

Current Customer # 3459583-5

12/01/2009	A	Q	92	4286.00	4286.00	100CF
8/31/2009	A	Q	89	5335.00	5335.00	100CF
6/03/2009	A	Q	90	3163.00	3163.00	100CF
3/05/2009	A	Q	94	3285.00	3285.00	100CF
12/01/2008	A	Q	97	2801.00	2801.00	100CF
8/28/2008	A	Q	92	2637.00	2637.00	100CF
6/02/2008	A	Q	91	1119.00	1119.00	100CF
3/03/2008	A	Q	95	823.00	823.00	100CF
11/29/2007	A	Q	91	1383.00	1383.00	100CF

Refresh Select

OK Cancel

15,989 CCF in 365 days $(15{,}989\ CCF)(\overset{RF}{0.57}) = 9114$ CCF to sewer

$(9{,}114\ CCF/yr)(748\ gal/CCF)(1\ yr/365\ days) = 18{,}678$ gpd

$= 568{,}106$ gal/month

Metropolitan St. Louis Sewer District
2350 Market Street
St. Louis, MO 63103

APPLICATION FOR SPECIAL DISCHARGE APPROVAL

I. WASTEWATER SOURCE IDENTIFICATION:

Site Name: Covidien / Mallinckrodt
Premise Address: 385 Marshall Ave
City: Webster Groves State: MO Zip: 63119
Owner: Covidien / Mallinckrodt
Contact Person: Shannon Brown
Title: Sr HSE Engineer
Phone: 314-654-8010 Fax: 314-654-2715

II. APPLICANT (mailing information):

Applicant Name: same
Title:
Company Name:
Mailing Address:
City: State: Zip:
Phone: Fax:

III. A. MATERIAL TO BE DISCHARGED (check all applicable boxes):

1. Wastewater description/location: Opadry / Water Solution 385 Marshall Ave.
2. Process/activity generating wastewater: Pan Coating
3. Physical and chemical composition: List all constituents, and known or potentially present regulated contaminants below.
   ☐ See separate listing enclosed, and/or ☒ See analytical results enclosed, and/or ☒ Material Safety Data Sheet enclosed.

DESCRIPTION	RANGE	UNIT
Opadry	20	%
Water	80	%

DESCRIPTION *(continued)*	RANGE	UNIT

4. Is this wastewater from a process subject to EPA's categorical standards in 40 CFR Subchapter N? ☐ Yes ☒ No
   a. If yes, the applicable standards are in: 40 CFR Part _____, Subpart _____ ☐ Existing source ☐ New source
5. Does this wastewater contain polychlorinated biphenyls, asbestos or radioactive material? ☐ Yes ☒ No
   a. If yes, describe:
6. Representative sample: ☒ Laboratory results attached, and/or ☐ Sample provided (1/2 gallon minimum, clear container)
   a. Sample collection point/location: Drums / Back Dock Collection method: Sample Bottles
   b. Sampler's name/Co.: Shannon Brown / Covidien Sample date/time: 2-4-2010 0930
   c. Attach chain of custody as available
7. Discharge will occur over the following time period: ☒ < 30 days ☐ ≥ Two years ☐ Other:
   a. Expected total volume of wastewater to be discharged over the time period above: 200 Gallons
   b. Proposed discharge volume: 50 Gallons, at a frequency of: ☐ One time ☒ Daily ☐ Weekly ☐ Monthly ☐ Once/three months ☐ Once/six months ☐ Other:
8. Pretreatment of wastewater prior to discharge: ☒ None ☐ Yes, describe:
   a. If yes, attach site plan, pretreatment system schematic, and design specifications.
9. Wastewater from a remediation project under: ☐ Superfund/CERCLA ☐ RCRA ☐ Voluntary program ☐ UST ☒ Not applicable
   a. If from a remediation project, briefly describe the past and present utilization of the property:

III.B. MATERIAL FROM UNDERGROUND STORAGE TANK SOURCE

☒ **Not applicable (go to Section IV)**

Please answer the following questions if you are requesting to discharge wastewater associated with an underground storage tank system.

1. a. Wastewater from: ☐ Inside UST(s) ☐ UST system pit ☐ Excavation outside UST system pit ☐ Monitoring well ☐ Groundwater remediation system

   b. UST project involves wastewater from: ☐ UST(s) closed in place ☐ UST(s) removed ☐ Remediation ☐ Upgrade ☐ Maintenance activities ☐ Well monitoring ☐ Other, explain: _____

   c. If wastewater is from a closure project, how long has UST(s) been out of service: _____ years

2. a. State assigned UST site identification number: _____ ☐ Not applicable

   b. Number of USTs affected: _____ ☐ Unknown

   c. For the UST(s) involved, their state identification number(s): _____ ☐ Not applicable

   d. Service Station Identification Number, as applicable: _____

3. Tank contents/former contents: ☐ Gasoline ☐ #2 diesel ☐ Used oil ☐ Unknown ☐ Other: _____

IV. DISCHARGE LOCATION

1. ☒ On-site. Describe proposed point of entry to sewer and the discharge rate (must be a sanitary or combined sewer): _____
   1st floor Lab 1N215 Note: Range of discharge must not surcharge sewer line.

2. ☐ Haul to MSD Bissell Point Hauled Waste Receiving Station at 10 E. Grand, St. Louis, MO.

   a. Transporters Name: _____ and MSD Hauler ID Number: _____

   b. Hazardous Waste Certification:

   For wastewater which is hauled to MSD's Bissell Point Hauled Waste Receiving Station, I hereby certify that to the best of my knowledge and belief, the above hauled waste is not classified as a RCRA "hazardous waste" as defined by the MDNR in 10 CSR 25 or USEPA in 40 CFR Part 261.

   Applicant Name (print): _____

   Signature: _____ **Date:** _____

ADDITIONAL INFORMATION:

_____

_____

_____

_____

_____

_____

V. APPLICANT SIGNATURE AND CERTIFICATION

This application must be signed by the applicant: either the source contact, or a contractor or agent directly responsible for site activities.

I hereby certify that I am directly responsible for activities at the site regarding the wastewater to be discharged, and to the best of my knowledge and belief, based on appropriate inquiry, the information in this application is true, complete, and accurate. The samples or analyses submitted are representative of the materials to be discharged. If granted approval to discharge, I agree to abide by the MSD Ordinances, and all applicable federal, state and local regulations. I agree to pay the costs of any pre-approval analyses performed by MSD and to pay any applicable disposal charges for the volume and strength of the wastes discharged.

Applicant Name (print): Robert F. Schaefer

Signature: Robert F Schaefer **Date:** 2-15-10

FOR MSD USE ONLY:

File Name: Mallinckrodt Inc. ID No. 10485688-00 Sample Point No. 802

TEKLAB, INC.

5445 HORSESHOE LAKE ROAD
COLLINSVILLE. ILLINOIS 62234

ENVIRONMENTAL TESTING LABORATORY

TEL: 618-344-1004
FAX: 618-344-1005

February 10, 2010

Shannon Brown
Covidien/Mallinckrodt, Inc.
385 Marshall Avenue
Webster Groves, MO 63119
TEL: (314) 654-8010
FAX: (314) 654-2715

ACCREDITED IN ACCORDANCE WITH

NELAP Accredited #100226

RE: Opadry Sample

WorkOrder: 10020228

Dear Shannon Brown:

TEKLAB, INC received 1 sample on 2/4/2010 10:30:00 AM for the analysis presented in the following report.

Samples are analyzed on an as received basis unless otherwise requested and documented. The sample results contained in this report relate only to the requested analytes of interest as directed on the chain of custody. IL ELAP and NELAP accredited fields of testing are indicated by the letters NELAP under the Certification column.

All quality control criteria applicable to the test methods employed for this project have been satisfactorily met and are in accordance with NELAP except where noted. The following report shall not be reproduced, except in full, without the written approval of Teklab, Inc.

If you have any questions regarding these tests results, please feel free to call.

Sincerely,

Heather A. White

Heather A. White
Project Manager
(618)344-1004 ex 20

TEKLAB, INC.

5445 HORSESHOE LAKE ROAD
COLLINSVILLE, ILLINOIS 62234

ENVIRONMENTAL TESTING LABORATORY

TEL: 618-344-1004
FAX: 618-344-1005

Client: Covidien/Mallinckrodt, Inc.
Project: Opadry Sample
LabOrder: 10020228
Report Date: 10-Feb-10

CASE NARRATIVE

Cooler Receipt Temp: 4.6 °C

State accreditations:

KS: NELAP #E-10347 | KY: UST #0073 | MO: DNR #00930 | AR: ADEQ #70-028-0

Qualifiers

DF - Dilution Factor	**B** - Analyte detected in the associated Method Blank	**C** - Client requested RL below PQL
RL - Reporting Limit	**J** - Analyte detected below reporting limits	**D** - Diluted out of sample
ND - Not Detected at the Reporting Limit	**R** - RPD outside accepted recovery limits	**E** - Value above quantitation range
Surr - Surrogate Standard added by lab	**S** - Spike Recovery outside accepted recovery limits	**H** - Holding time exceeded
TNTC - Too numerous to count (> 200 CFU)	**X** - Value exceeds Maximum Contaminant Level	**MI** - Matrix interference
Q - QC criteria failed or noncompliant CCV	**#** - Unknown hydrocarbon	**DNI** - Did not ignite
NELAP - IL ELAP and NELAP Accredited Field of Testing	**IDPH** - IL Dept. of Public Health	

TEKLAB, INC.

5445 HORSESHOE LAKE ROAD
COLLINSVILLE, ILLINOIS 62234

ENVIRONMENTAL TESTING LABORATORY

TEL: 618-344-1004
FAX: 618-344-1005

LABORATORY RESULTS

Client: Covidien/Mallinckrodt, Inc.
WorkOrder: 10020228
Lab ID: 10020228-001
Report Date: 10-Feb-10

Client Project: Opadry Sample
Client Sample ID: Opadry
Collection Date: 2/4/2010 9:30:00 AM
Matrix: AQUEOUS

Analyses	Certification	RL	Qual	Result	Units	DF	Date Analyzed	Analyst
EPA 600 4.1.4, 200.7R4.4, METALS BY ICP (TOTAL)								
Cadmium	NELAP	0.0020		< 0.0020	mg/L	1	2/10/2010 10:32:31 AM	LAL
Chromium	NELAP	0.0100		< 0.0100	mg/L	1	2/9/2010 6:10:34 PM	JMW
Copper	NELAP	0.0100		< 0.0100	mg/L	1	2/10/2010 10:32:31 AM	LAL
Iron	NELAP	0.0200	J	0.0072	mg/L	1	2/9/2010 6:10:34 PM	JMW
Lead	NELAP	0.0400		< 0.0400	mg/L	1	2/9/2010 6:10:34 PM	JMW
Nickel	NELAP	0.0100		< 0.0100	mg/L	1	2/9/2010 6:10:34 PM	JMW
Silver	NELAP	0.0100		< 0.0100	mg/L	1	2/9/2010 6:10:34 PM	JMW
EPA 600 410.4								
Chemical Oxygen Demand	NELAP	200		2020	mg/L	4	2/8/2010 12:00:00 PM	BSJ
EPA 600 624, VOLATILE ORGANIC COMPOUNDS BY GC/MS								
1,1,1-Trichloroethane	NELAP	500		ND	µg/L	100	2/5/2010 10:30:00 PM	CCF
1,1,2,2-Tetrachloroethane	NELAP	500		ND	µg/L	100	2/5/2010 10:30:00 PM	CCF
1,1,2-Trichloroethane	NELAP	500		ND	µg/L	100	2/5/2010 10:30:00 PM	CCF
1,1-Dichloroethane	NELAP	500		ND	µg/L	100	2/5/2010 10:30:00 PM	CCF
1,1-Dichloroethene	NELAP	500		ND	µg/L	100	2/5/2010 10:30:00 PM	CCF
1,2-Dichlorobenzene	NELAP	500		ND	µg/L	100	2/5/2010 10:30:00 PM	CCF
1,2-Dichloroethane	NELAP	500		ND	µg/L	100	2/5/2010 10:30:00 PM	CCF
1,2-Dichloropropane	NELAP	500		ND	µg/L	100	2/5/2010 10:30:00 PM	CCF
1,3-Dichlorobenzene	NELAP	500		ND	µg/L	100	2/5/2010 10:30:00 PM	CCF
1,4-Dichlorobenzene	NELAP	500		ND	µg/L	100	2/5/2010 10:30:00 PM	CCF
2-Chloroethyl vinyl ether	NELAP	2000		ND	µg/L	100	2/5/2010 10:30:00 PM	CCF
Acrolein	NELAP	10000		ND	µg/L	100	2/5/2010 10:30:00 PM	CCF
Acrylonitrile	NELAP	500		ND	µg/L	100	2/5/2010 10:30:00 PM	CCF
Benzene	NELAP	200		ND	µg/L	100	2/5/2010 10:30:00 PM	CCF
Bromodichloromethane	NELAP	500		ND	µg/L	100	2/5/2010 10:30:00 PM	CCF
Bromoform	NELAP	500		ND	µg/L	100	2/5/2010 10:30:00 PM	CCF
Bromomethane	NELAP	1000		ND	µg/L	100	2/5/2010 10:30:00 PM	CCF
Carbon tetrachloride	NELAP	500		ND	µg/L	100	2/5/2010 10:30:00 PM	CCF
Chlorobenzene	NELAP	500		ND	µg/L	100	2/5/2010 10:30:00 PM	CCF
Chloroethane	NELAP	1000		ND	µg/L	100	2/5/2010 10:30:00 PM	CCF
Chloroform	NELAP	500		ND	µg/L	100	2/5/2010 10:30:00 PM	CCF
Chloromethane	NELAP	1000		ND	µg/L	100	2/5/2010 10:30:00 PM	CCF
cis-1,3-Dichloropropene	NELAP	500		ND	µg/L	100	2/5/2010 10:30:00 PM	CCF
Dibromochloromethane	NELAP	500		ND	µg/L	100	2/5/2010 10:30:00 PM	CCF
Ethylbenzene	NELAP	500		ND	µg/L	100	2/5/2010 10:30:00 PM	CCF
m,p-Xylenes		500		ND	µg/L	100	2/5/2010 10:30:00 PM	CCF
Methylene chloride	NELAP	500		ND	µg/L	100	2/5/2010 10:30:00 PM	CCF
o-Xylene		500		ND	µg/L	100	2/5/2010 10:30:00 PM	CCF

TEKLAB, INC.

5445 HORSESHOE LAKE ROAD
COLLINSVILLE, ILLINOIS 62234

ENVIRONMENTAL TESTING LABORATORY

TEL: 618-344-1004
FAX: 618-344-1005

LABORATORY RESULTS

Client: Covidien/Mallinckrodt, Inc.
WorkOrder: 10020228
Lab ID: 10020228-001
Report Date: 10-Feb-10

Client Project: Opadry Sample
Client Sample ID: Opadry
Collection Date: 2/4/2010 9:30:00 AM
Matrix: AQUEOUS

Analyses	Certification	RL	Qual	Result	Units	DF	Date Analyzed	Analyst
EPA 600 624, VOLATILE ORGANIC COMPOUNDS BY GC/MS								
Tetrachloroethene	NELAP	500		ND	µg/L	100	2/5/2010 10:30:00 PM	CCF
Toluene	NELAP	500		ND	µg/L	100	2/5/2010 10:30:00 PM	CCF
trans-1,2-Dichloroethene	NELAP	500		ND	µg/L	100	2/5/2010 10:30:00 PM	CCF
trans-1,3-Dichloropropene	NELAP	500		ND	µg/L	100	2/5/2010 10:30:00 PM	CCF
Trichloroethene	NELAP	500		ND	µg/L	100	2/5/2010 10:30:00 PM	CCF
Trichlorofluoromethane	NELAP	500		ND	µg/L	100	2/5/2010 10:30:00 PM	CCF
Vinyl chloride	NELAP	200		ND	µg/L	100	2/5/2010 10:30:00 PM	CCF
Xylenes, Total	NELAP	500		ND	µg/L	100	2/5/2010 10:30:00 PM	CCF
Surr: 1,2-Dichloroethane-d4		74.7-129		100	%REC	100	2/5/2010 10:30:00 PM	CCF
Surr: 4-Bromofluorobenzene		86-119		105.2	%REC	100	2/5/2010 10:30:00 PM	CCF
Surr: Dibromofluoromethane		81.7-123		101.0	%REC	100	2/5/2010 10:30:00 PM	CCF
Surr: Toluene-d8		84.3-114		96.5	%REC	100	2/5/2010 10:30:00 PM	CCF
STANDARD METHOD 18TH ED. 4500-H B, LABORATORY ANALYZED								
Lab pH	NELAP	1.00		6.48		1	2/5/2010 8:38:00 PM	NJM
STANDARD METHODS 18TH ED. 2540 D								
Total Suspended Solids	NELAP	6		< 6	mg/L	1	2/9/2010 2:00:00 PM	MVS

Sample Narrative

EPA 600 624, Volatile Organic Compounds by GC/MS

Elevated reporting limit due to sample composition.

TEKLAB, INC.

5445 HORSESHOE LAKE ROAD
COLLINSVILLE. ILLINOIS 62234

ENVIRONMENTAL TESTING LABORATORY

TEL: 618-344-1004
FAX: 618-344-1005

RECEIVING CHECK LIST

Client: Covidien/Mallinckrodt, Inc.
Project: Opadry Sample
Lab Order: 10020228
Report Date: 10-Feb-10

Carrier: Tim Mathis

Received By: DB

Completed by: Dawn Brantley
On: 04-Feb-10

Reviewed by: Heather A. White
On: 04-Feb-10

Pages to follow: Chain of custody 1 Extra pages included 0

Shipping container/cooler in good condition?	Yes ☑	No ☐	Not Present ☐	Temp °C 4.6
Type of thermal preservation?	None ☐	Ice ☑	Blue Ice ☐	Dry Ice ☐
Chain of custody present?	Yes ☑	No ☐		
Chain of custody signed when relinquished and received?	Yes ☑	No ☐		
Chain of custody agrees with sample labels?	Yes ☑	No ☐		
Samples in proper container/bottle?	Yes ☑	No ☐		
Sample containers intact?	Yes ☑	No ☐		
Sufficient sample volume for indicated test?	Yes ☑	No ☐		
All samples received within holding time?	Yes ☑	No ☐		
Reported field parameters measured:	Field ☐	Lab ☑	NA ☐	
Container/Temp Blank temperature in compliance?	Yes ☑	No ☐		
When thermal preservation is required, samples are compliant with a temperature between 0.1°C - 6.0°C, or when samples are received on ice the same day as collected.				
Water - VOA vials have zero headspace?	Yes ☐	No ☑	No VOA vials ☐	
Water - TOX containers have zero headspace?	Yes ☐	No ☐	No TOX containers ☑	
Water - pH acceptable upon receipt?	Yes ☑	No ☐		

Any No responses must be detailed below or on the COC.

A significant amount of headspace was present in the volatile vials. Per Shannon Brown proceed with analysis. DB 2/4/10.

CHAIN OF CUSTODY

pg. 1 of 1 Work Order # 10020228

TEKLAB, INC. 5445 Horseshoe Lake Road ~ Collinsville, IL 62234 ~ Phone: (618) 344-1004 ~ Fax: (618) 344-1005

Client: Cardien / Mallinckrodt
Address: 385 Marshall Ave.
City / State / Zip: Webster Groves, MO 63119
Contact: Shannon Brown Phone: 314-654-8010
E-Mail: Shannon.Brown@cardien.com Fax: 314-654-2715

Samples on: ☒ Ice ☐ Blue Ice ☐ No Ice 4.6 °C
Preserved in: ☐ Lab ☒ Field DD 2/4/10
Lab Notes:
5-g headspace both vials - Per Shannon Brown
Comments: OK to proceed w/headspace
metals: Cd, Cr, Cu, Fe, Pb, Ni, Zn
Teklab, Inc.
Courier Pick Up

- Are these samples known to be involved in litigation? If yes, a surcharge will apply. ☐ Yes ☐ No
- Are these samples known to be hazardous? ☐ Yes ☐ No
- Are there any required reporting limits to be met on the requested analysis? If yes, please provide limits in comment section. ☐ Yes ☐ No

Project Name / Number:
Sample Collector's Name:
Results Requested: ☐ Standard ☐ 1-2 Day (100% Surcharge) ☐ Other_____ ☐ 3 Day (50% Surcharge)
Billing Instructions:

Lab Use Only	Sample Identification	Date/Time Sampled	# and Type of Containers: UNPRES	HNO_3	NaOH	H_2SO_4	HCL	MeOH	$NaHSO_4$	Other	MATRIX: Water	Drinking Water	Soil	Sludge	Sp. Waste	INDICATE ANALYSIS REQUESTED: COD	Metals	Volatile Organics	pH	TSS
10020228-01	Opacity Sample	2/4/10 0930				X					X					X				
	Opacity Sample	2/4/10 0930		X							X						X			
	Opacity Sample	2/4/10 0930					X				X							X		
	Opacity Sample	2/4/10 0930	X																X	X

Relinquished By	Date / Time	Received By	Date / Time
Shannon Brown	2/4/10 0935		2/4/10 0935
	2/4/10 1030		2/4/10 1030

The individual signing this agreement on behalf of client acknowledges that he/she has read and understands the terms and conditions of this agreement, on the reverse side, and that he/she has the authority to sign on behalf of client.

WHITE & YELLOW – LAB PINK – SAMPLER'S COPY

MSD 011897

Metropolitan St. Louis Sewer District

Division of Environmental Compliance
10 East Grand Avenue
St. Louis, MO 63147-2913
Phone: 314.768.6200 www.stlmsd.com

February 10, 2010

Lisa Meyer
MALLINCKRODT
3600 North Second St.
St. Louis, MO 63147

Dear Ms. Meyer:

We have reviewed your application dated February 5, 2010 requesting approval to discharge 5,000 gallons of wastewater to the Metropolitan St. Louis Sewer District for treatment. This wastewater is from a failed batch of magnesium stearate solution at the Mallinckrodt facility located at 3600 North Second Street, St. Louis, Missouri. This wastewater is subject to the categorical pretreatment standards in 40 CFR Part 414 subparts G and H. We understand that the wastewater will be discharged through sampling point 010.

Based on the information and sample results you provided, this wastewater meets MSD Ordinance 12559 standards and is approved for discharge into a sanitary sewer on site. The discharge into the sewer must be controlled at a rate that will not surcharge the lines in the area. This approval is valid for 30 days from the date of this letter.

You must be certain the waste is discharged into a sanitary or combined sewer inlet only. This letter does not authorize any discharge to a separate storm sewer, or to any watercourse, as any such discharge would be in violation of state and federal laws. **Please notify me at the number below when the discharge is to commence, and please ensure the onsite personnel discharging the wastewater in question are provided with a copy of this letter.**

This discharge has been approved based upon the information you provided, and is subject to the conditions stated above. This approval may be revoked by the District at any time if any of the information is found to be incorrect, or if the conditions of this approval are violated. Also, if the discharge causes any operational or maintenance problem within the District's collection or treatment system, or results in violations of any conditions of the District's NPDES permit, Mallinckrodt will be considered responsible for damages.

If you have any questions, please call me at (314) 436-8755.

Sincerely,
METROPOLITAN ST. LOUIS SEWER DISTRICT

Steven M. Grace

Steve Grace
Environmental Assistant Engineer

bv

pc: Nora Estopare

File: IU, MALLINCKRODT INC [2112059600], SP834

C1A

SD EVALUATION CHECKLIST - ON SITE

APPLICATION INFORMATION

Source Name: Mallinckrodt Inc. Evaluated by: SMG NCE 2/10/10

Premise Address: 3600 N. 2nd St. Date: 2/10/10

Send approval letter to applicant

Application Dated: 2/5/10 Received: 2/8/10 All Requested Info. Received: 2/10/10

SOURCE FILING/DESCRIPTION

1 - Source in PIMS? Y / N
2 - If No, on IU Cross-Ref list? * Y / N
3 - If No, MSD Account # from E-CIS? Y / N
4 - If none, on "Source" list (pre-IMS)? ** Y / N
5 - If No, assigned SOUR# from PIMS.

* o:\costrecovery\cross reference xls file

** o:\costrecovery\sourlist xls file

SOURCE TYPE (circle): (IU) / Dead IU / SD

INDUSTRY ID: 21120596-00

Sample Point: No. Assigned: 834 Description: Failed batch of Magnesium stearate solution in Bldg. X

Normal WW flow from premise? (N/A) _____ ccf/month, _____ GPD, _____ GPH.

REGULATORY STATUS

Is waste a Hazardous Waste? (N) / Y

Categorical standards apply? N / (Y) 40 CFR Part 414 subparts G & H

Contain PCB/ asbestos/ radioactive/ dioxin/ used oil? (N) / Y _____

Regulatory Agency Oversight? (N) / Y _____

DISCHARGE CONSIDERATIONS At MSD's connection:

Ordinance Limits (12559, p32) exceeded? (N) / Y _____

Ordinance other limits exceeded (dye, flash pt <140F, temp >140F, obstruction, nuisance foaming/odor, corrosion causing): (N) / Y _____

Water Quality Standard exceeded? (N) / Y _____

Fumes in sewer exceed PEL/TLV limits? (N) / Y _____

Vapors in sewer exceed 10% of LEL? (N) / Y _____

RECOMMENDATION: (APPROVE) / DENY (cc WWTP Mgr for timed discharge)

APPROVAL CONDITIONS:

Timed Discharge (COD/BOD/WQ/foam): (N) / Y Limit = _____ gal/hour

Require Treatment before Discharge? (N) / Y _____

Laboratory analysis fee due? (N) / Y $_____

SMR required? (N) / Y Frequency/analysis: _____

SMR log: (N/A) / Remediation.xls / Nonremediation.xls

Volume Billing applies (water unmetered or credited)? (N) / Y

Bill High Strength? (N) / Y Yes, If use >60,000 gal/month water ___and, > norm WW strgth

Surcharge calculation attached: (N/A) / N / Y

Expiration log updated: (N/A) / N / Y

O:\CostRecovery\Special Discharge\C1a.Checklist.doc

COVIDIEN

Facsimile Communication

To: Mr. Steve Grace

Company: MSD Environmental Compliance

Fax Number: 314.436.8766

Date: February 5, 2010

Number of Pages *(including cover sheet):* 13

Health, Safety, Environmental

Lisa Meyer
Senior HSE Engineer

Covidien/Mallinckrodt
3600 N. Second St.
St. Louis, Missouri 63147

Telephone 314-654-3374
Facsimile 314-654-1251

- ☐ For your information
- X Please respond
- X Urgent
- ☐ Confidential

Comments:

Dear Mr. Grace,

Attached please find a revised application for the Special Discharge of a 5% magnesium stearate and water solution from Building X. The total volume has been changed to 5000 gallons and I have attached the analytical information per your request. If you have any questions or need additional information, please contact me.

Thank you,

Lisa Meyer

Metropolitan St. Louis Sewer District

Phone No. (314) 436-8710
Division of Environmental Compliance, 10 East Grand Avenue, St. Louis, Missouri 63147 Fax No. (314) 436-8766

APPLICATION FOR SPECIAL DISCHARGE APPROVAL

I. WASTEWATER SOURCE IDENTIFICATION:

Site Name: Mallinckrodt
Premise Address: 3600 North 2nd St.
City: St. Louis State: MO Zip: 63147
Owner: Mallinckrodt
Contact Person: Lisa Meyer
Title: Senior HSE Engineer
Phone: 314.654.3374 Fax: 314.654.1251

II. APPLICANT (mailing information):

Applicant Name: Lisa Meyer
Title: Senior HSE Engineer
Company Name: Mallinckrodt
Mailing Address: 3600 North 2nd St.
City: St. Louis State: MO Zip: 63147
Phone: 314.654.3374 Fax: 314.654.1251

III. A. MATERIAL TO BE DISCHARGED (check all applicable boxes):

1. Wastewater description/location: Failed batch of Magnesium stearate solution in Building X
2. Process/activity generating wastewater: Failed batch of Magnesium stearate solution
   pH 9.4
3. Physical and chemical composition: List all constituents, and known or potentially present regulated contaminants below.
   ☐ See separate listing enclosed, and/or ☑ See analytical results enclosed, and/or ☑ Material Safety Data Sheet enclosed.

DESCRIPTION	RANGE	UNIT
Water	95	%
Magnesium stearate	5	%
Trace Sodium sulfate		

DESCRIPTION *(continued)*	RANGE	UNIT

4. Is this wastewater from a process subject to EPA's categorical standards in 40 CFR Subchapter N? ☒ Yes ☐ No
   a. If yes, the applicable standards are in: 40 CFR Part 414, Subpart G & H ☒ Existing source ☐ New source
5. Does this wastewater contain polychlorinated biphenyls, asbestos or radioactive material? ☐ Yes ☒ No
   a. If yes, describe:
6. Representative sample: ☐ Laboratory results attached, and/or ☐ Sample provided (1/2 gallon minimum, clear container)
   a. Sample collection point/location: Collection method:
   b. Sampler's name/Co.: Sample date/time:
   c. Attach chain of custody as available
7. Discharge will occur over the following time period: ☐ < 30 days ☐ ≥ Two years ☒ Other: When approval is granted
   a. Expected total volume of wastewater to be discharged over the time period above: _____ Gallons
   b. Proposed discharge volume: 5000 Gallons, at a frequency of: ☒ One time ☐ Daily ☐ Weekly ☐ Monthly ☐ Once/three months ☐ Once/six months ☐ Other:
8. Pretreatment of wastewater prior to discharge: ☐ None ☒ Yes, describe: pH adjust at main outfall SP010
   a. If yes, attach site plan, pretreatment system schematic, and design specifications.
9. Wastewater from a remediation project under: ☐ Superfund/CERCLA ☐ RCRA ☐ Voluntary program ☐ UST ☒ Not applicable
   a. If from a remediation project, briefly describe the past and present utilization of the property:

III.B. MATERIAL FROM UNDERGROUND STORAGE TANK SOURCE

☒ **Not applicable (go to Section IV)**

Please answer the following questions if you are requesting to discharge wastewater associated with an underground storage tank system.

1. a. Wastewater from: ☐ Inside UST(s) ☐ UST system pit ☐ Excavation outside UST system pit ☐ Monitoring well ☐ Groundwater remediation system

   b. UST project involves wastewater from: ☐ UST(s) closed in place ☐ UST(s) removed ☐ Remediation ☐ Upgrade ☐ Maintenance activities ☐ Well monitoring ☐ Other, explain: _____

   c. If wastewater is from a closure project, how long has UST(s) been out of service: _____ years

2. a. State assigned UST site identification number: _____ ☐ Not applicable

   b. Number of USTs affected: _____ ☐ Unknown

   c. For the UST(s) involved, their state identification number(s): _____ ☐ Not applicable

   d. Service Station Identification Number, as applicable: _____

3. Tank contents/former contents: ☐ Gasoline ☐ #2 diesel ☐ Used oil ☐ Unknown ☐ Other: _____

IV. DISCHARGE LOCATION

1. ☒ On-site. Describe proposed point of entry to sewer and the discharge rate (must be a sanitary or combined sewer): _____

   Building X sewer to main outfall SP010 Note: Range of discharge must not surcharge sewer line.

2. ☐ Haul to MSD Bissell Point Hauled Waste Receiving Station at 10 E. Grand, St. Louis, MO.

   a. Transporters Name: _____ and MSD Hauler ID Number: _____

   b. Hazardous Waste Certification:

   For wastewater which is hauled to MSD's Bissell Point Hauled Waste Receiving Station, I hereby certify that to the best of my knowledge and belief, the above hauled waste is not classified as a RCRA "hazardous waste" as defined by the MDNR in 10 CSR 25 or USEPA in 40 CFR Part 261.

   Applicant Name (print): _____

   Signature: _____ **Date:** _____

ADDITIONAL INFORMATION:

Revised application. Original was dated 2/3/10.

V. APPLICANT SIGNATURE AND CERTIFICATION

This application must be signed by the applicant: either the source contact, or a contractor or agent directly responsible for site activities.

I hereby certify that I am directly responsible for activities at the site regarding the wastewater to be discharged, and to the best of my knowledge and belief, based on appropriate inquiry, the information in this application is true, complete, and accurate. The samples or analyses submitted are representative of the materials to be discharged. If granted approval to discharge, I agree to abide by the MSD Ordinances, and all applicable federal, state and local regulations. I agree to pay the costs of any pre-approval analyses performed by MSD and to pay any applicable disposal charges for the volume and strength of the wastes discharged.

Applicant Name (print): Lisa Meyer

Signature: Lisa Meyer **Date:** 2/5/10

FOR MSD USE ONLY:

File Name: _____ ID No. _____ Sample Point No. _____

TEKLAB, INC.

5445 HORSESHOE LAKE ROAD
COLLINSVILLE, ILLINOIS 62234

ENVIRONMENTAL TESTING LABORATORY

TEL: 618-344-1004
FAX: 618-344-1005

LABORATORY RESULTS

Client: Mallinckrodt Inc.
WorkOrder: 10020209
Lab ID: 10020209-001
Report Date: 04-Feb-10

Client Project: BX
Client Sample ID: BX
Collection Date: 2/3/2010 12:00:00 PM
Matrix: AQUEOUS

Analyses	Certification	RL	Qual	Result	Units	DF	Date Analyzed	Analyst
SW-846 3510C, 8270C, SEMI-VOLATILE ORGANIC COMPOUNDS BY GC/MS								
1,2,4-Trichlorobenzene	NELAP	0.040		ND	mg/L	2	2/4/2010 12:59:00 PM	DMH
1,2-Dichlorobenzene	NELAP	0.040		ND	mg/L	2	2/4/2010 12:59:00 PM	DMH
1,3-Dichlorobenzene	NELAP	0.040		ND	mg/L	2	2/4/2010 12:59:00 PM	DMH
1,4-Dichlorobenzene	NELAP	0.040		ND	mg/L	2	2/4/2010 12:59:00 PM	DMH
2,4,5-Trichlorophenol	NELAP	0.040		ND	mg/L	2	2/4/2010 12:59:00 PM	DMH
2,4,6-Trichlorophenol	NELAP	0.040		ND	mg/L	2	2/4/2010 12:59:00 PM	DMH
2,4-Dichlorophenol	NELAP	0.040		ND	mg/L	2	2/4/2010 12:59:00 PM	DMH
2,4-Dimethylphenol	NELAP	0.040		ND	mg/L	2	2/4/2010 12:59:00 PM	DMH
2,4-Dinitrophenol	NELAP	0.080		ND	mg/L	2	2/4/2010 12:59:00 PM	DMH
2,4-Dinitrotoluene	NELAP	0.040		ND	mg/L	2	2/4/2010 12:59:00 PM	DMH
2,6-Dinitrotoluene	NELAP	0.040		ND	mg/L	2	2/4/2010 12:59:00 PM	DMH
2-Chloronaphthalene	NELAP	0.040		ND	mg/L	2	2/4/2010 12:59:00 PM	DMH
2-Chlorophenol	NELAP	0.040		ND	mg/L	2	2/4/2010 12:59:00 PM	DMH
2-Methylnaphthalene	NELAP	0.040		ND	mg/L	2	2/4/2010 12:59:00 PM	DMH
2-Nitroaniline	NELAP	0.160		ND	mg/L	2	2/4/2010 12:59:00 PM	DMH
2-Nitrophenol	NELAP	0.080		ND	mg/L	2	2/4/2010 12:59:00 PM	DMH
3,3'-Dichlorobenzidine	NELAP	0.040		ND	mg/L	2	2/4/2010 12:59:00 PM	DMH
3-Nitroaniline	NELAP	0.160		ND	mg/L	2	2/4/2010 12:59:00 PM	DMH
4,6-Dinitro-2-methylphenol	NELAP	0.080		ND	mg/L	2	2/4/2010 12:59:00 PM	DMH
4-Bromophenyl phenyl ether	NELAP	0.040		ND	mg/L	2	2/4/2010 12:59:00 PM	DMH
4-Chloro-3-methylphenol	NELAP	0.080		ND	mg/L	2	2/4/2010 12:59:00 PM	DMH
4-Chloroaniline	NELAP	0.080		ND	mg/L	2	2/4/2010 12:59:00 PM	DMH
4-Chlorophenyl phenyl ether	NELAP	0.040		ND	mg/L	2	2/4/2010 12:59:00 PM	DMH
4-Nitroaniline	NELAP	0.080		ND	mg/L	2	2/4/2010 12:59:00 PM	DMH
4-Nitrophenol	NELAP	0.080		ND	mg/L	2	2/4/2010 12:59:00 PM	DMH
Acenaphthene	NELAP	0.040		ND	mg/L	2	2/4/2010 12:59:00 PM	DMH
Acenaphthylene	NELAP	0.040		ND	mg/L	2	2/4/2010 12:59:00 PM	DMH
Anthracene	NELAP	0.040		ND	mg/L	2	2/4/2010 12:59:00 PM	DMH
Benzo(a)anthracene	NELAP	0.040		ND	mg/L	2	2/4/2010 12:59:00 PM	DMH
Benzo(a)pyrene	NELAP	0.040		ND	mg/L	2	2/4/2010 12:59:00 PM	DMH
Benzo(b)fluoranthene	NELAP	0.040		ND	mg/L	2	2/4/2010 12:59:00 PM	DMH
Benzo(g,h,i)perylene	NELAP	0.040		ND	mg/L	2	2/4/2010 12:59:00 PM	DMH
Benzo(k)fluoranthene	NELAP	0.040		ND	mg/L	2	2/4/2010 12:59:00 PM	DMH
Bis(2-chloroethoxy)methane	NELAP	0.040		ND	mg/L	2	2/4/2010 12:59:00 PM	DMH
Bis(2-chloroethyl)ether	NELAP	0.040		ND	mg/L	2	2/4/2010 12:59:00 PM	DMH
Bis(2-chloroisopropyl)ether	NELAP	0.040		ND	mg/L	2	2/4/2010 12:59:00 PM	DMH
Bis(2-ethylhexyl)phthalate	NELAP	0.024		ND	mg/L	2	2/4/2010 12:59:00 PM	DMH
Butyl benzyl phthalate	NELAP	0.040		ND	mg/L	2	2/4/2010 12:59:00 PM	DMH

TEKLAB, INC.

5445 HORSESHOE LAKE ROAD
COLLINSVILLE, ILLINOIS 62234

ENVIRONMENTAL TESTING LABORATORY

TEL: 618-344-1004
FAX: 618-344-1005

LABORATORY RESULTS

Client: Mallinckrodt Inc.
WorkOrder: 10020209
Lab ID: 10020209-001
Report Date: 04-Feb-10

Client Project: BX
Client Sample ID: BX
Collection Date: 2/3/2010 12:00:00 PM
Matrix: AQUEOUS

Analyses	Certification	RL	Qual	Result	Units	DF	Date Analyzed	Analyst
SW-846 3510C, 8270C, SEMI-VOLATILE ORGANIC COMPOUNDS BY GC/MS								
Carbazole	NELAP	0.080		ND	mg/L	2	2/4/2010 12:59:00 PM	DMH
Chrysene	NELAP	0.040		ND	mg/L	2	2/4/2010 12:59:00 PM	DMH
Dibenzo(a,h)anthracene	NELAP	0.040		ND	mg/L	2	2/4/2010 12:59:00 PM	DMH
Dibenzofuran	NELAP	0.040		ND	mg/L	2	2/4/2010 12:59:00 PM	DMH
Diethyl phthalate	NELAP	0.040		ND	mg/L	2	2/4/2010 12:59:00 PM	DMH
Dimethyl phthalate	NELAP	0.040		ND	mg/L	2	2/4/2010 12:59:00 PM	DMH
Di-n-butyl phthalate	NELAP	0.040		ND	mg/L	2	2/4/2010 12:59:00 PM	DMH
Di-n-octyl phthalate	NELAP	0.040		ND	mg/L	2	2/4/2010 12:59:00 PM	DMH
Fluoranthene	NELAP	0.040		ND	mg/L	2	2/4/2010 12:59:00 PM	DMH
Fluorene	NELAP	0.040		ND	mg/L	2	2/4/2010 12:59:00 PM	DMH
Hexachlorobenzene	NELAP	0.040		ND	mg/L	2	2/4/2010 12:59:00 PM	DMH
Hexachlorobutadiene	NELAP	0.040		ND	mg/L	2	2/4/2010 12:59:00 PM	DMH
Hexachlorocyclopentadiene	NELAP	0.080		ND	mg/L	2	2/4/2010 12:59:00 PM	DMH
Hexachloroethane	NELAP	0.040		ND	mg/L	2	2/4/2010 12:59:00 PM	DMH
Indeno(1,2,3-cd)pyrene	NELAP	0.040		ND	mg/L	2	2/4/2010 12:59:00 PM	DMH
Isophorone	NELAP	0.040		ND	mg/L	2	2/4/2010 12:59:00 PM	DMH
m,p-Cresol	NELAP	0.040		ND	mg/L	2	2/4/2010 12:59:00 PM	DMH
Naphthalene	NELAP	0.040		ND	mg/L	2	2/4/2010 12:59:00 PM	DMH
N-Nitroso-di-n-propylamine	NELAP	0.040		ND	mg/L	2	2/4/2010 12:59:00 PM	DMH
N-Nitrosodiphenylamine	NELAP	0.040		ND	mg/L	2	2/4/2010 12:59:00 PM	DMH
o-Cresol	NELAP	0.040		ND	mg/L	2	2/4/2010 12:59:00 PM	DMH
Pentachlorophenol	NELAP	0.080		ND	mg/L	2	2/4/2010 12:59:00 PM	DMH
Phenanthrene	NELAP	0.040		ND	mg/L	2	2/4/2010 12:59:00 PM	DMH
Phenol	NELAP	0.020		ND	mg/L	2	2/4/2010 12:59:00 PM	DMH
Pyrene	NELAP	0.040		ND	mg/L	2	2/4/2010 12:59:00 PM	DMH
Surr: 2,4,6-Tribromophenol		27.7-149	S	190.0	%REC	2	2/4/2010 12:59:00 PM	DMH
Surr: 2-Fluorobiphenyl		44.9-116	S	168.7	%REC	2	2/4/2010 12:59:00 PM	DMH
Surr: 2-Fluorophenol		10.6-78.7	S	98.8	%REC	2	2/4/2010 12:59:00 PM	DMH
Surr: Nitrobenzene-d5		41.4-104	S	169.5	%REC	2	2/4/2010 12:59:00 PM	DMH
Surr: Phenol-d5		9.04-52.9	S	59.1	%REC	2	2/4/2010 12:59:00 PM	DMH
Surr: p-Terphenyl-d14		23.5-114	S	0	%REC	2	2/4/2010 12:59:00 PM	DMH
SW-846 5030, 8260B, VOLATILE ORGANIC COMPOUNDS BY GC/MS								
1,1,1,2-Tetrachloroethane	NELAP	1250		ND	µg/L	250	2/3/2010 6:53:00 PM	CCF
1,1,1-Trichloroethane	NELAP	1250		ND	µg/L	250	2/3/2010 6:53:00 PM	CCF
1,1,2,2-Tetrachloroethane	NELAP	1250		ND	µg/L	250	2/3/2010 6:53:00 PM	CCF
1,1,2-Trichloro-1,2,2-trifluoroethane		5000		ND	µg/L	250	2/3/2010 6:53:00 PM	CCF
1,1,2-Trichloroethane	NELAP	1250		ND	µg/L	250	2/3/2010 6:53:00 PM	CCF
1,1-Dichloro-2-propanone		12500		ND	µg/L	250	2/3/2010 6:53:00 PM	CCF

TEKLAB, INC.

5445 HORSESHOE LAKE ROAD
COLLINSVILLE, ILLINOIS 62234

ENVIRONMENTAL TESTING LABORATORY

TEL: 618-344-1004
FAX: 618-344-1005

LABORATORY RESULTS

Client: Mallinckrodt Inc.
WorkOrder: 10020209
Lab ID: 10020209-001
Report Date: 04-Feb-10

Client Project: BX
Client Sample ID: BX
Collection Date: 2/3/2010 12:00:00 PM
Matrix: AQUEOUS

Analyses	Certification	RL	Qual	Result	Units	DF	Date Analyzed	Analyst
SW-846 5030, 8260B, VOLATILE ORGANIC COMPOUNDS BY GC/MS								
1,1-Dichloroethane	NELAP	1250		ND	µg/L	250	2/3/2010 6:53:00 PM	CCF
1,1-Dichloroethene	NELAP	1250		ND	µg/L	250	2/3/2010 6:53:00 PM	CCF
1,1-Dichloropropene	NELAP	1250		ND	µg/L	250	2/3/2010 6:53:00 PM	CCF
1,2,3-Trichlorobenzene	NELAP	1250		ND	µg/L	250	2/3/2010 6:53:00 PM	CCF
1,2,3-Trichloropropane	NELAP	1250		ND	µg/L	250	2/3/2010 6:53:00 PM	CCF
1,2,3-Trimethylbenzene		1250		ND	µg/L	250	2/3/2010 6:53:00 PM	CCF
1,2,4-Trichlorobenzene	NELAP	1250		ND	µg/L	250	2/3/2010 6:53:00 PM	CCF
1,2,4-Trimethylbenzene	NELAP	1250		ND	µg/L	250	2/3/2010 6:53:00 PM	CCF
1,2-Dibromo-3-chloropropane	NELAP	1250		ND	µg/L	250	2/3/2010 6:53:00 PM	CCF
1,2-Dibromoethane	NELAP	1250		ND	µg/L	250	2/3/2010 6:53:00 PM	CCF
1,2-Dichlorobenzene	NELAP	1250		ND	µg/L	250	2/3/2010 6:53:00 PM	CCF
1,2-Dichloroethane	NELAP	1250		ND	µg/L	250	2/3/2010 6:53:00 PM	CCF
1,2-Dichloropropane	NELAP	1250		ND	µg/L	250	2/3/2010 6:53:00 PM	CCF
1,3,5-Trimethylbenzene	NELAP	1250		ND	µg/L	250	2/3/2010 6:53:00 PM	CCF
1,3-Dichlorobenzene	NELAP	1250		ND	µg/L	250	2/3/2010 6:53:00 PM	CCF
1,3-Dichloropropane	NELAP	1250		ND	µg/L	250	2/3/2010 6:53:00 PM	CCF
1,4-Dichlorobenzene	NELAP	1250		ND	µg/L	250	2/3/2010 6:53:00 PM	CCF
1-Chlorobutane	NELAP	1250		ND	µg/L	250	2/3/2010 6:53:00 PM	CCF
2,2-Dichloropropane	NELAP	1250		ND	µg/L	250	2/3/2010 6:53:00 PM	CCF
2-Butanone	NELAP	6250		ND	µg/L	250	2/3/2010 6:53:00 PM	CCF
2-Chloroethyl vinyl ether	NELAP	5000		ND	µg/L	250	2/3/2010 6:53:00 PM	CCF
2-Chlorotoluene	NELAP	1250		ND	µg/L	250	2/3/2010 6:53:00 PM	CCF
2-Hexanone	NELAP	6250		ND	µg/L	250	2/3/2010 6:53:00 PM	CCF
2-Nitropropane	NELAP	12500		ND	µg/L	250	2/3/2010 6:53:00 PM	CCF
4-Chlorotoluene	NELAP	1250		ND	µg/L	250	2/3/2010 6:53:00 PM	CCF
4-Methyl-2-pentanone	NELAP	6250		ND	µg/L	250	2/3/2010 6:53:00 PM	CCF
Acetone	NELAP	6250		ND	µg/L	250	2/3/2010 6:53:00 PM	CCF
Acetonitrile	NELAP	12500		ND	µg/L	250	2/3/2010 6:53:00 PM	CCF
Acrolein	NELAP	25000		ND	µg/L	250	2/3/2010 6:53:00 PM	CCF
Acrylonitrile	NELAP	1250		ND	µg/L	250	2/3/2010 6:53:00 PM	CCF
Allyl chloride	NELAP	1250		ND	µg/L	250	2/3/2010 6:53:00 PM	CCF
Benzene	NELAP	500		ND	µg/L	250	2/3/2010 6:53:00 PM	CCF
Bromobenzene	NELAP	1250		ND	µg/L	250	2/3/2010 6:53:00 PM	CCF
Bromochloromethane	NELAP	1250		ND	µg/L	250	2/3/2010 6:53:00 PM	CCF
Bromodichloromethane	NELAP	1250		ND	µg/L	250	2/3/2010 6:53:00 PM	CCF
Bromoform	NELAP	1250		ND	µg/L	250	2/3/2010 6:53:00 PM	CCF
Bromomethane	NELAP	2500		ND	µg/L	250	2/3/2010 6:53:00 PM	CCF
Butyl acetate		6250		ND	µg/L	250	2/3/2010 6:53:00 PM	CCF

TEKLAB, INC.

5445 HORSESHOE LAKE ROAD
COLLINSVILLE, ILLINOIS 62234

ENVIRONMENTAL TESTING LABORATORY

TEL: 618-344-1004
FAX: 618-344-1005

LABORATORY RESULTS

Client: Mallinckrodt Inc.
WorkOrder: 10020209
Lab ID: 10020209-001
Report Date: 04-Feb-10

Client Project: BX
Client Sample ID: BX
Collection Date: 2/3/2010 12:00:00 PM
Matrix: AQUEOUS

Analyses	Certification	RL	Qual	Result	Units	DF	Date Analyzed	Analyst
SW-846 5030, 8260B, VOLATILE ORGANIC COMPOUNDS BY GC/MS								
Carbon disulfide	NELAP	1250		ND	µg/L	250	2/3/2010 6:53:00 PM	CCF
Carbon tetrachloride	NELAP	1250		ND	µg/L	250	2/3/2010 6:53:00 PM	CCF
Chlorobenzene	NELAP	1250		ND	µg/L	250	2/3/2010 6:53:00 PM	CCF
Chloroethane	NELAP	2500		ND	µg/L	250	2/3/2010 6:53:00 PM	CCF
Chloroform	NELAP	1250		ND	µg/L	250	2/3/2010 6:53:00 PM	CCF
Chloromethane	NELAP	2500		ND	µg/L	250	2/3/2010 6:53:00 PM	CCF
Chloroprene	NELAP	5000		ND	µg/L	250	2/3/2010 6:53:00 PM	CCF
cis-1,2-Dichloroethene	NELAP	1250		ND	µg/L	250	2/3/2010 6:53:00 PM	CCF
cis-1,3-Dichloropropene	NELAP	1250		ND	µg/L	250	2/3/2010 6:53:00 PM	CCF
cis-1,4-Dichloro-2-butene	NELAP	1250		ND	µg/L	250	2/3/2010 6:53:00 PM	CCF
Cyclohexanone		12500		ND	µg/L	250	2/3/2010 6:53:00 PM	CCF
Dibromochloromethane	NELAP	1250		ND	µg/L	250	2/3/2010 6:53:00 PM	CCF
Dibromomethane	NELAP	1250		ND	µg/L	250	2/3/2010 6:53:00 PM	CCF
Dichlorodifluoromethane	NELAP	2500		ND	µg/L	250	2/3/2010 6:53:00 PM	CCF
Ethyl acetate	NELAP	2500		ND	µg/L	250	2/3/2010 6:53:00 PM	CCF
Ethyl ether	NELAP	1250		ND	µg/L	250	2/3/2010 6:53:00 PM	CCF
Ethyl methacrylate	NELAP	1250		ND	µg/L	250	2/3/2010 6:53:00 PM	CCF
Ethylbenzene	NELAP	1250		ND	µg/L	250	2/3/2010 6:53:00 PM	CCF
Heptane		5000		ND	µg/L	250	2/3/2010 6:53:00 PM	CCF
Hexachlorobutadiene	NELAP	1250		ND	µg/L	250	2/3/2010 6:53:00 PM	CCF
Hexachloroethane	NELAP	2500		ND	µg/L	250	2/3/2010 6:53:00 PM	CCF
Iodomethane	NELAP	1250		ND	µg/L	250	2/3/2010 6:53:00 PM	CCF
Isopropylbenzene	NELAP	1250		ND	µg/L	250	2/3/2010 6:53:00 PM	CCF
m,p-Xylenes	NELAP	1250		ND	µg/L	250	2/3/2010 6:53:00 PM	CCF
Methacrylonitrile	NELAP	2500		ND	µg/L	250	2/3/2010 6:53:00 PM	CCF
Methyl acetate		1250		ND	µg/L	250	2/3/2010 6:53:00 PM	CCF
Methyl Methacrylate	NELAP	1250		ND	µg/L	250	2/3/2010 6:53:00 PM	CCF
Methyl tert-butyl ether	NELAP	500		ND	µg/L	250	2/3/2010 6:53:00 PM	CCF
Methylacrylate		2500		ND	µg/L	250	2/3/2010 6:53:00 PM	CCF
Methylene chloride	NELAP	1250		ND	µg/L	250	2/3/2010 6:53:00 PM	CCF
Naphthalene	NELAP	2500		ND	µg/L	250	2/3/2010 6:53:00 PM	CCF
n-Butylbenzene	NELAP	1250		ND	µg/L	250	2/3/2010 6:53:00 PM	CCF
n-Hexane		5000		ND	µg/L	250	2/3/2010 6:53:00 PM	CCF
Nitrobenzene	NELAP	12500		ND	µg/L	250	2/3/2010 6:53:00 PM	CCF
n-Propylbenzene	NELAP	1250		ND	µg/L	250	2/3/2010 6:53:00 PM	CCF
o-Xylene	NELAP	1250		ND	µg/L	250	2/3/2010 6:53:00 PM	CCF
Pentachloroethane	NELAP	5000		ND	µg/L	250	2/3/2010 6:53:00 PM	CCF
p-Isopropyltoluene	NELAP	1250		ND	µg/L	250	2/3/2010 6:53:00 PM	CCF

TEKLAB, INC.

5445 HORSESHOE LAKE ROAD
COLLINSVILLE, ILLINOIS 62234

ENVIRONMENTAL TESTING LABORATORY

TEL: 618-344-1004
FAX: 618-344-1005

LABORATORY RESULTS

Client: Mallinckrodt Inc.
WorkOrder: 10020209
Lab ID: 10020209-001
Report Date: 04-Feb-10

Client Project: BX
Client Sample ID: BX
Collection Date: 2/3/2010 12:00:00 PM
Matrix: AQUEOUS

Analyses	Certification	RL	Qual	Result	Units	DF	Date Analyzed	Analyst
SW-846 5030, 8260B, VOLATILE ORGANIC COMPOUNDS BY GC/MS								
Propionitrile	NELAP	12500		ND	µg/L	250	2/3/2010 6:53:00 PM	CCF
sec-Butylbenzene	NELAP	1250		ND	µg/L	250	2/3/2010 6:53:00 PM	CCF
Styrene	NELAP	1250		ND	µg/L	250	2/3/2010 6:53:00 PM	CCF
tert-Butylbenzene	NELAP	1250		ND	µg/L	250	2/3/2010 6:53:00 PM	CCF
Tetrachloroethene	NELAP	1250		ND	µg/L	250	2/3/2010 6:53:00 PM	CCF
Tetrahydrofuran	NELAP	5000		ND	µg/L	250	2/3/2010 6:53:00 PM	CCF
Toluene	NELAP	1250		ND	µg/L	250	2/3/2010 6:53:00 PM	CCF
trans-1,2-Dichloroethene	NELAP	1250		ND	µg/L	250	2/3/2010 6:53:00 PM	CCF
trans-1,3-Dichloropropene	NELAP	1250		ND	µg/L	250	2/3/2010 6:53:00 PM	CCF
trans-1,4-Dichloro-2-butene	NELAP	2500		ND	µg/L	250	2/3/2010 6:53:00 PM	CCF
Trichloroethene	NELAP	1250		ND	µg/L	250	2/3/2010 6:53:00 PM	CCF
Trichlorofluoromethane	NELAP	1250		ND	µg/L	250	2/3/2010 6:53:00 PM	CCF
Vinyl acetate	NELAP	2500		ND	µg/L	250	2/3/2010 6:53:00 PM	CCF
Vinyl chloride	NELAP	500		ND	µg/L	250	2/3/2010 6:53:00 PM	CCF
Xylenes, Total	NELAP	1250		ND	µg/L	250	2/3/2010 6:53:00 PM	CCF
Surr: 1,2-Dichloroethane-d4		74.7-129		103.4	%REC	250	2/3/2010 6:53:00 PM	CCF
Surr: 4-Bromofluorobenzene		86-119		108.4	%REC	250	2/3/2010 6:53:00 PM	CCF
Surr: Dibromofluoromethane		81.7-123		104.6	%REC	250	2/3/2010 6:53:00 PM	CCF
Surr: Toluene-d8		84.3-114		96.5	%REC	250	2/3/2010 6:53:00 PM	CCF

Sample Narrative

SW-846 3510C, 8270C, Semi-Volatile Organic Compounds by GC/MS

Surrogate recovery was outside QC limits due to matrix interference.

Elevated reporting limit due to high levels of target and/or non-target analytes.

SW-846 5030, 8260B, Volatile Organic Compounds by GC/MS

Elevated reporting limit due to sample composition.

COVIDIEN
Mallinckrodt

MATERIAL SAFETY DATA SHEET

1. Product and Company Identification

Material name	**MAGNESIUM STEARATE**
Version #	02
Revision date	12-04-2009
CAS #	557-04-0
Product Codes	Mallinckrodt: 1257, 1277, 1726, 1729, 2254, 2255, 2256, 2257, 2279, 2800, 3508, 4024, 4217, 5705, 5712, 5716, 5774, 5777, 6504, 7205, 7807
Synonym(s)	STEARIC ACID, MAGNESIUM SALT * Octadecanoic acid, magnesium salt
Manufacturer	Covidien (Mallinckrodt)
Address	675 McDonnell Blvd. Hazelwood MO 63042
Customer Service	888-744-1414
24 Hour Emergency	314-654-1600
Chemtrec	800-424-9300
Supplier	24 Hour Emergency 314-654-1600 Chemtrec 800-424-9300 Customer Service 888-744-1414

2. Hazards Identification

Emergency overview	WARNING Dust may form explosive mixture with air. Exposure to powder or dusts may be irritating to eyes, nose and throat.
Potential health effects	
Routes of exposure	Inhalation.
Eyes	Contact with eyes may cause irritation. Dust or powder may irritate eye tissue.
Skin	Health injuries are not known or expected under normal use.
Inhalation	Inhalation of dusts may cause respiratory irritation. Coughing. Difficulty in breathing.
Ingestion	Health injuries are not known or expected under normal use.
Chronic effects	Inhalation of powder/dust may cause lung edema.
Potential environmental effects	Ecological injuries are not known or expected under normal use.

3. Composition / Information on Ingredients

Components	CAS #	Percent
MAGNESIUM STEARATE	557-04-0	100

4. First Aid Measures

First aid procedures	
Eye contact	Rinse with water. Get medical attention if irritation develops and persists.
Skin contact	Rinse skin with water/shower. Get medical attention if irritation develops and persists.
Inhalation	If gas/fume/vapor/dust/mist from the material is inhaled, remove the affected person immediately to fresh air. Call a physician if symptoms develop or persist.
Ingestion	Rinse mouth. If ingestion of a large amount does occur, call a poison control center immediately.
General advice	If you feel unwell, seek medical advice (show the label where possible). Show this safety data sheet to the doctor in attendance.

5. Fire Fighting Measures

Flammable properties	Dust may form explosive mixture with air.
Extinguishing media	
Suitable extinguishing media	Water.
Protection of firefighters	
Protective equipment for firefighters	As in any fire, wear self-contained breathing apparatus pressure-demand, MSHA/NIOSH (approved or equivalent) and full protective gear.
Special protective equipment for fire-fighters	As in any fire, wear self-contained breathing apparatus pressure-demand, MSHA/NIOSH (approved or equivalent) and full protective gear.
Specific methods	In the event of fire, cool tanks with water spray. Use water spray to cool unopened containers.

6. Accidental Release Measures

Personal precautions	Ventilate the area. Avoid inhalation of dust from the spilled material. Wear a dust mask if dust is generated above exposure limits.
Methods for containment	If sweeping of a contaminated area is necessary use a dust suppressant agent which does not react with the product.
Methods for cleaning up	Sweep up or vacuum up spillage and collect in suitable container for disposal. Avoid dust formation. Collect dust using a vacuum cleaner equipped with HEPA filter. Following product recovery, flush area with water.

7. Handling and Storage

Handling	Keep formation of airborne dusts to a minimum. Provide appropriate exhaust ventilation at places where dust is formed. Ground container and transfer equipment to eliminate static electric sparks. Use explosion-proof ventilation equipment. Do not breathe dust. Avoid contact with eyes. In case of insufficient ventilation, wear suitable respiratory equipment. Dust may form explosive mixture with air.
Storage	Store in a well-ventilated place. Keep container tightly closed. Keep at temperature not exceeding 40°C. Guard against dust accumulation of this material. Containers of this material may be hazardous when empty since they retain product residues (dust, solids); observe all warnings and precautions listed for the product.

8. Exposure Controls / Personal Protection

Occupational exposure limits

Canada - British Columbia

Material	Type	Value
MAGNESIUM STEARATE (557-04-0)	TWA	10.0000 mg/m3

Canada - Ontario

Material	Type	Value	Form
MAGNESIUM STEARATE (557-04-0)	TWA	10.0000 mg/m3	Total dust.

Engineering controls	Ventilation should be sufficient to effectively remove and prevent buildup of any dusts or fumes that may be generated during handling or thermal processing. If material is ground, cut, or used in any operation which may generate dusts, use appropriate local exhaust ventilation to keep exposures below the recommended exposure limits.
Personal protective equipment	
Eye / face protection	Use tight fitting goggles if dust is generated. Provide eyewash station and safety shower.
Skin protection	No special protective equipment required.
Respiratory protection	Wear respirator with dust filter.

9. Physical & Chemical Properties

Appearance	Powder.

Color	White or Yellow.
Odor	Slight.
Odor threshold	Not available.
Physical state	Solid.
Form	Powder.
pH	Not available.
Melting point	302 - 338 °F (150 - 170 °C)
Freezing point	Not available.
Boiling point	Not available.
Flash point	Not available.
Evaporation rate	Not available.
Flammability limits in air, upper, % by volume	Not available.
Flammability limits in air, lower, % by volume	Not available.
Vapor pressure	< -0.0001 kPa at 25°C
Vapor density	Not available.
Specific gravity	1.028
Relative density	Not available.
Solubility (water)	Insoluble in water.
Partition coefficient (n-octanol/water)	Not available
Auto-ignition temperature	Not available.
Decomposition temperature	Not available.
Molecular weight	591.27 g/mol
Molecular formula	Mg(C18H35O2)2
Dust Electrostatic Properties	
Minimum Ignition Energy (Cloud)	50 - 100 mJ
Dust Explosion Properties	
dP/dT	934 bar/s
Kst	254 bar.m/s
Limiting Oxygen Concentration	12 - 13 %
Minimum Explosible Concentration	20 - 30 g/m3
Minimum Ignition Temperature-Cloud	824 - 860 °F (440 - 460 °C)
Minimum Ignition Temperature-Layer	716 - 734 °F (380 - 390 °C)
Pmax	8.8 bar

10. Chemical Stability & Reactivity Information

Conditions to avoid	Dust clouds may be explosive under certain conditions.
Incompatible materials	Strong oxidizing agents. Acids.
Hazardous decomposition products	Carbon monoxide. May include oxides of magnesium.

11. Toxicological Information

Sensitization	Not available.
Local effects	Inhalation of dusts may cause respiratory irritation.
Chronic effects	Not expected to be hazardous by WHMIS criteria. Lung edema.
Carcinogenicity	Not available.
Mutagenicity	Not available.
Reproductive effects	Not available.
Teratogenicity	Not available.

12. Ecological Information

Ecotoxicity	This product has no known eco-toxicological effects.
Persistence and degradability	Not available.

13. Disposal Considerations

Disposal instructions	This product, in its present state, when discarded or disposed of, is not a hazardous waste according to Federal regulations (40 CFR 261.4 (b)(4)). Under RCRA, it is the responsibility of the user of the product to determine, at the time of disposal, whether the product meets RCRA criteria for hazardous waste.

14. Transport Information

TDG

Not regulated as dangerous goods.

15. Regulatory Information

Canadian regulations	This product has been classified in accordance with the hazard criteria of the CPR and the MSDS contains all the information required by the CPR.
WHMIS status	Non-controlled

Inventory status

Country(s) or region	Inventory name	On inventory (yes/no)*
Australia	Australian Inventory of Chemical Substances (AICS)	Yes
Canada	Domestic Substances List (DSL)	Yes
Canada	Non-Domestic Substances List (NDSL)	No
China	Inventory of Existing Chemical Substances in China (IECSC)	Yes
Europe	European Inventory of Existing Commercial Chemical Substances (EINECS)	Yes
Europe	European List of Notified Chemical Substances (ELINCS)	No
Japan	Inventory of Existing and New Chemical Substances (ENCS)	Yes
Korea	Existing Chemicals List (ECL)	Yes
New Zealand	New Zealand Inventory	Yes
Philippines	Philippine Inventory of Chemicals and Chemical Substances (PICCS)	Yes
United States & Puerto Rico	Toxic Substances Control Act (TSCA) Inventory	Yes

*A "Yes" indicates that all components of this product comply with the inventory requirements administered by the governing country(s)

Saf-T-Data	Health: 1 - Slight Flammability: 2 - Moderate Reactivity: 1 - Slight Contact: 1 - Slight Lab Protective Equip: B - GOGGLES; LAB COAT; VENT HOOD; PROPER GLOVES Storage Color Code: G - Green (General Storage)

16. Other Information

NFPA ratings	Health: 0 Flammability: 1 Instability: 0
Disclaimer	Mallinckrodt Baker, Inc. provides the information contained herein in good faith but makes no representation as to its comprehensiveness or accuracy. This document is intended only as a guide to the appropriate precautionary handling of the material by a properly trained person using this product. Individuals receiving the information must exercise their independent judgment in determining its appropriateness for a particular purpose. MALLINCKRODT BAKER, INC. MAKES NO REPRESENTATIONS OR WARRANTIES, EITHER EXPRESS OR IMPLIED, INCLUDING WITHOUT LIMITATION ANY WARRANTIES OF MERCHANTABILITY, FITNESS FOR A PARTICULAR PURPOSE WITH RESPECT TO THE INFORMATION SET FORTH HEREIN OR THE PRODUCT TO WHICH THE INFORMATION REFERS. ACCORDINGLY, MALLINCKRODT BAKER, INC. WILL NOT BE RESPONSIBLE FOR DAMAGES RESULTING FROM USE OF OR RELIANCE UPON THIS INFORMATION.
Issue date	12-04-2009
This data sheet contains changes from the previous version in section(s):	Product and Company Identification: Product and Company Identification

TO: Toni McGarry, Finance Department

FROM: Steven M. Grace, DEC SMG

DATE: February 1, 2010

RE: **Wastewater User Charge Billing for Special Discharge**

Please bill, by invoice, the following charges applicable to an on-site special discharge approved in our letter dated October 30, 1998, as modified in letters dated November 20, 1998, July 19, 1999, March 28, 2001, October 13, 2004, June 19, 2006, and May 22, 2008. The discharge dates and quantity are from information submitted by Sharon Cotner, Corps of Engineers, in a letter dated January 28, 2010.

This charge is based on the rates in MSD Wastewater User Charge Ordinance 12754.

PARTY TO BILL: Kerry Wallace
The Shaw Group Inc.
1 Angelrodt Street
St. Louis, MO 63147

BILLING IS FOR: On-Site Special Discharge

DISCHARGE PERIOD: October through December 2009

SOURCE OF WASTE: Treated construction water from the St. Louis Downtown FUSRAP Site located at Mallinckrodt, Inc., 3600 N. Second Street, St. Louis, Missouri.

Discharge Period	Billing Item	Quantity	Units	Rate	Charge
10/5/09 - 11/25/09	Volume	738	CcF	$1.92	$1,416.96
Totals:	---	738	CcF	---	$1,416.96

If you have any questions, please call me on extension 8755.

bv

pc: Nora Estopare

File: IU, MALLINCKRODT INC [2112059600]

Metropolitan St. Louis Sewer District

Division of Environmental Compliance
10 East Grand Avenue
St. Louis, MO 63147-2913
Phone: 314.768.6200 www.stlmsd.com

January 28, 2010

Lisa Meyer
MALLINCKRODT
3600 North Second St.
St. Louis, MO 63147

Re: Wastewater User Charge Billing for Special Discharge

Dear Ms. Meyer:

This is to advise you of the wastewater user charges applicable to an on-site special discharge approved in our letter to you dated January 12, 2010. You were advised of the extra-strength surcharges as part of the original approval letter. That charge was determined using the chemical oxygen demand concentration in the laboratory analytical report submitted in conjunction with your application for special discharge. The discharge date and quantity are from information submitted by you in a letter dated January 25, 2010.

Our Finance Department will bill you by invoice for the charges described below. These charges are based on the rates in MSD Wastewater User Charge Ordinance 12754. For your convenience, using the volume and strength of the waste discharged, the ordinance rates have been converted to a per-gallon basis.

PARTY TO BILL: Addressee

BILLING IS FOR: On-Site Special Discharge

DISCHARGE PERIOD: January 14, 2010

SOURCE OF WASTE: 20% ethylene glycol solution from the chiller system at Building 96 of the Mallinckrodt facility located at 3600 North Second Street, St. Louis, Missouri.

Discharge Period	Billing Item	Quantity	Units	Rate	Charge
1/14/10	Extra-Strength Surcharge	1,870	Gal	$0.25	$467.50
Totals:	------	1,870	Gal	-----	$467.50

Please do not pay until you receive our invoice. If you have any questions, please contact me at (314) 436-8755.

Sincerely,
METROPOLITAN ST. LOUIS SEWER DISTRICT

Steven M. Grace

Steve Grace
Environmental Assistant Engineer

bv

pc Toni McGarry - Finance Dept.
Nora Estopare
File: IU, MALLINCKRODT INC [2112059600], 3600 North Second Street, St. Louis, Missouri

METROPOLITAN ST. LOUIS SEWER DISTRICT
INDUSTRIAL FACILITY REINSPECTION REPORT

Company: Mallinckrodt, Inc. Account #: 2112059600
Premise Address: 3600 N. 2nd St. Zip Code: 63147
MSD Classes: SIU ☒ CIU ☒ Surch ☒ Potential Toxic Waste ☒ Non-Toxic Proc Waste ☐
No Process Flow ☐ Multi-User ☐ Special Handling/Billing ☐
Company Representative: Lisa Meyer
Title: H,S, & E Engineer Phone#: 314-654-3374
Inspector: J. Gill
Others Present: None
Inspection Date: 1/28/10 Time: From 8:40 AM To 2:00 PM (Last Insp. 11/21/08)

NOTE: ALL ITEMS ARE TO BE COMPLETED BASED ON EVENTS SINCE LAST INSPECTION. ANSWERS ARE BASED ON INFORMATION OBTAINED OR PROVIDED BY COMPANY DURING INSPECTION, AS WELL AS INFORMATION IN FILE.

***** DATABASE ALSO UPDATED WITH APPROPRIATE CHANGES - see attached database reports *****

1. A. ARE THERE ADDITIONAL NON-STORMWATER ACCOUNT NUMBERS? Yes☐ No☒
   List them, note any changes: _____
   B. Did all acct no's have water usage on PIMS? Yes☒ No☐
   C. If no to B, explain: _____

2. PROCESSES & CLEANUP/WASHDOWN:

	Cont/ Batch		Water Used?	Frequency of discharge	Sample pt.
Chemcial systhesis & extraction of pharmaceutical drugs	Batch		Yes	Daily	Multiple SP's
Stearate mfg.	Batch		Yes	Daily	905
Imaging compound mfg.	Batch		Yes	Daily	912
Inorganic compound mfg.	Batch		Yes	Daily	010
Pharmaceutical dosage mfg.	Batch		Yes	Daily	938
	(None)		N/A		

3. PRETREATMENT (other than grease traps) - describe:

	Sample pt.
pH adjustment	010, 005, 080, 905, 912, 930, 933
Steam stripping (PEG systems 1 & 2), methanol stripping	920, 935, 937
Oil interceptor	010, 003

4. DOES COMPANY HAVE ANY GREASE TRAPS? Yes☐ No☒
If yes: A. List sample points: _____
B. What is the frequency for cleaning & maintenance? _____
C. Are enzymes (not bacteria) used in traps? Yes☐ No☐
D. If yes to C, was co. told to stop or switch to approved bacteria? Yes☐ No☐
E. Was co. informed that MSD performs separate grease trap inspections? Yes☐ No☐

5. HAS COMPANY CONSTRUCTED NEW BLDGS/ADDITIONS WITH SEWERS SINCE LAST INSP? Yes☒ No☐
If yes: A. Ask company: Did they notify MSD's Plan Review group? Unknown☐ Yes☒ No☐
B. If no or unknown, has inspector notified Plan Review group? Yes☐ No☐
C. Comments: Roof drain from new hazardous waste site has drains that tie into SP001 (P#0028720-00)

6. HAS COMPANY BEGUN DISCHARGING ANY NEW POLLUTANTS SINCE THE LAST INSP? Yes☐ No☒
If yes: A. List pollutants & process: _____
B. Will MSD STP exceed existing NPDES discharge limit(s)? Yes☐ No☐
C. Will MSD STP's discharge exceed 0.1 mg/l for any new pollutant? Yes☐ No☐
(MSD must notify MDNR if B or C is yes and discharge will continue.)
D. Comments: _____

7. ARE THERE ANY FEDERALLY REGULATED (40 CFR 405-471) OPERATIONS? Yes☒ No☐

If yes: A. List reg. & describe (including any discharge):
40 CFR 439 Sub B,C,&D [Sub E NA (no stds)] PSES - pharmaceutical mfg., discharge to sewer or PEG treatment system; 414 Sub G&H PSES - stearates, discharge to sewer; 415 Sub B&K PSES (no stds) - zinc sulfate process (inactive)

8. DOES CATEGORICAL WASTEWATER COMBINE WITH NON-CAT. WW PRIOR TO SAMPLING? Yes☐ No☒

If yes: A. At which points? _____
B. Current applied factor: _____ Is it correct? Yes☐ No☐
C. If no, list correct factor/explain? _____

9. IS ANY WASTEWATER SUBJECT TO PRODUCTION OR MASS BASED STANDARDS? Yes☒ No☐

If yes: A. At which points? 905 & 912
B. Since calculation of the current limits, has the long term avg production rate or discharge volume changed by 20% or more? Yes☒ No☐
C. If yes to B, explain: SP905, the stearate line has decreased discharge by 46% since the last inspection. The stearate production is down overall.

10. ARE ANY RADIOACTIVE MATERIALS HANDLED? Yes☒ No☐

If yes: A. Describe operations & disposal: Soil remediation (none in process)
B. Does company have MSD authorization for disposal to sewer? NA☐ Yes☒ No☐
C. Most recent authorization date: 7/8/94
D. Amount discharged in most recent complete calendar year: 0

11. DOES PROCESS or P&E WASHDOWN WATER USE APPEAR EXCESSIVE? Yes☐ No☒

A. Explain how use was verified & any needed changes:
Processes are very water-intensive, many of which recirculate water when possible. No excessive usage observed during inspection.

12. BASED ON OBSERVATIONS DURING INSPECTION, DOES COMPANY APPEAR TO HAVE SOME WATER THAT IS NOT DISCHARGED TO SEWER? Yes☒ No☐

If yes: A. Describe: Evaporative loss and water in product
B. Was "Return Factor Program" brochure given to company? Yes☒ No☐
(regardless of whether some water is not discharged to sewer)

13. HAS COMPANY EXCEEDED ORDINANCE DISCHARGE LIMITS SINCE LAST INSPECTION OR WITHIN THE LAST 12 MONTHS (if last insp <12 months ago)? Yes☒ No☐

If yes: A.

Pollutant	When	Sample Points	Is problem resolved? Yes/No	Describe
pH excursion	2/14/09	010	Yes	caustic leak - pH probe malfunction, part fixed same day
pH excursion	10/23/08	011	Yes	There was a bypass at SP011 - pumps had stopped working as a result of a blown fuse. The problem has been fixed.
			N/A	
			N/A	
			N/A	

B. Comments: _____

14. HAS COMPANY EXCEEDED CATEGORICAL PRETREATMENT LIMITS SINCE THE LAST INSPECTION OR WITHIN THE LAST 12 MONTHS? NA☐ Yes☐ No☒

If yes: A.

Pollutant	When	Sample Points	Is problem resolved? Yes/No	Describe
			N/A	
			N/A	
			N/A	
			N/A	
			N/A	

B. Comments: _____

15. HAVE THERE BEEN ANY PROBLEM DISCHARGES SINCE LAST INSPECTION? Yes☒ No☐

If yes: A. Upsets? ☐ Bypasses of pretreatment facilities? ☐
Spills? ☐ Slug discharges? ☐ Other? _____

B. Explain any marked: 12/10/08 - release of 1000 gallons of ethylene glycol mixture and a total loss over time to be 4590 lbs. of ethylene glycol. A faulty heat/cool module was the cause, and it has since been replaced with a new unit. 12/28/08 - release of 350 gallons of ethylene glycol in Bldg 97 - the defective heat-cool module was fixed. 1/29/10 - 710 gallons of an Ioversol batch were inadvertently released to sewer due to drain valves not being closed. 3/31/09 - release of 4406 lbs of ethylene glycol due to an operator error with the chiller system in Bldg 250. Corrective actions have been taken with the employee to prevent this from happening again. 4/14/09 ethylene glycol release of 390 gallons from Bldg 250. 11/16/09 - chloroform release of 53 gallons from a speared forklift in the hazardous waste storage area. 12/17/09 - bypass of the treatment system at Plant 5 as a result of a blown fuse. The fuse has been fixed.

16. COULD SPILLS OR LEAKS OF PROCESS TANKS, STORED WASTES, OR STORED CHEMICALS EASILY REACH SANITARY SEWERS OR STORM DRAINS? Yes☐ No☒

If yes: A. What needs to be done?

_____

If no: B. How are they controlled?
Bulk storage of chemicals are contained with sump systems underneath. A new hazardous waste pad was built with a sump system. Spill kits are located throughout the facility.

17. BASED ON OBSERVATIONS DURING INSPECTION, ARE THERE ANY AREAS WHERE COMPANY ACTIVITIES APPEAR TO IMPAIR STORMWATER RUNOFF? Yes☐ No☒

If yes: A. Describe: _____
B. What needs to be done? _____

C. Was "Illicit Stormwater Discharges" brochure given to company? Yes☒ No☐
(regardless of whether there are any problem areas)

18. DOES COMPANY HAVE ANY SPILL CONTROL OR SLUG DISCHARGE CONTROL PLANS? Yes☒ No☐

If yes: A.

	Title	Last Update	Update needed? Explain if yes
1.	SPCCP	5/1/06	No
2.			N/A

B. Are any Plans needed (in addition to those listed in Part A)? Yes☐ No☒
(If yes, write company and request)

19. DOES COMPANY HAVE ANY MAINTENANCE SHOP PARTS WASHERS? Yes☒ No☐

If yes: A. Parts washer solvent name: Crystal Clean parts washing solvent

B. Priority pollutants (or "none"): None

C. How is spent solvent disposed? Hauled off site

(Parts washer solvents are not included in database's priority pollutants list, nor monitored for unless conditions show potential discharges)

20. ARE ANY ORGANICS OR SOLVENTS USED (OTHER THAN IN PARTS WASHERS)? Yes☒ No☐

If yes: A.

Solvent name/ components	Used for?	413/433/469 Process?	How disposed?	Priority Pollutant?
(see updated list attachment with report)	Extraction & synthesis	Yes☐ No☒	Hauled off site or destroyed in PEG strippers	Yes☒ No☐
		Yes☐ No☐		Yes☐ No☐
		Yes☐ No☐		Yes☐ No☐
		Yes☐ No☐		Yes☐ No☐
		Yes☐ No☐		Yes☐ No☐
		Yes☐ No☐		Yes☐ No☐

21. DOES COMPANY HAVE A 413/433/469 SOLVENT MANAGEMENT PLAN? Yes☐ No☒

If yes: A. Is it part of a Spill/Slug Control Plan listed above? Yes[1.☐ 2.☐] No☐

B. If no to A, date of last update for SMP: _____

C. Is there a copy of the Spill/Slug Plan or SMP in the files? Yes☐ No☐

D. Does SMP address all 413/433/469 solvents? Yes☐ No☐

(If no to C or D, write company and require submittal and/or update)

22. ARE EMERGENCY NOTIFICATION PROCEDURES POSTED THAT INCLUDE MSD CONTACTS? Yes☒ No☐

A. Was company provided notification cards & told to post where emergency response personnel can locate them? Yes☒ No☐

(Must post if co. generates process wastewater or stores chemicals of concern)

23. IS COMPANY REQUIRED TO SELF-MONITOR ANY OF THEIR DISCHARGES? Yes☒ No☐

If yes: A. Is requirement contained in permit ☒ or other document ☐.

B. If other document, date & description: _____

C. How frequently is sampling required? Quarterly, 912 monthly

D. How frequently are reports required? Quarterly

E. Have reports been on-time, complete & signed by proper person? Yes☒ No☐

F. If no, explain: _____

24. DOES COMPANY SELF-MONITOR ITS WASTEWATER DISCHARGE? Yes☒ No☐

If yes: A. Is the self-monitoring required by MSD? Yes☒ No☐

B. Are representative grab/comp samples collected? Yes☒ No☐

C. Does sample collection time period match company's production shifts (is it representative)? Yes☒ No☐

D. Are EPA-approved 40 CFR 136 wastewater test methods used? Yes☒ No☐

E. If no to B, C, or D, explain needed changes: _____

25. DOES CO. CONTINUOUSLY MONITOR AT SAMPLE POINT AND KEEP A PERMANENT RECORD FOR: pH ☒, TEMP ☐, LEL ☐? Yes☒ No☐

If yes: A. At which SPs? 010

B. Does company submit quarterly summaries? Yes☒ No☐

C. If no, explain: _____

26. DOES MSD SPLIT SAMPLES WITH THE COMPANY? Yes☐ No☒

If yes: A. Is company having the samples analyzed Yes☐ No☐

B. How does company insure proper preservation, holding times & analytical methods? _____

C. Has company submitted results of all split sample analyses since the last insp? Yes☐ No☐

D. Have results been submitted within 28 days of the collection's calendar quarter? Yes☐ No☐

E. If no to C, or D, explain: _____

F. Does company still want to split samples? Yes☐ No☐

G. Comments: _____

27. IS COMPANY UNDER ANY ENVIRONMENTAL ENFORCEMENT ORDERS OR REQUIREMENTS TO SUBMIT COMPLIANCE SCHEDULE REPORTS? Yes☐ No☒

If yes: A. Type and date: _____

B. Have the reports & actions been on-time & complete? Yes☐ No☐

C. If no, explain: _____

28. ASK COMPANY: IS CO. IN COMPLIANCE W/APPLICABLE NESHAP REGS FOR WW DISCHARGES? Yes☒ No☐

[Some MDNR-issued Title V air permits for specific processes allow pre-approved WW discharge.] [City/County-issued air permits are not NESHAP permits.]

If no: A. Describe: _____

B. Was MDNR Air Pollution Control informed? (must be done) Yes☐ No☐

29. DOES COMPANY RETAIN ALL WASTEWATER RECORDS FOR AT LEAST 5 YEARS? Yes☒ No☐

If no: A. How long does company retain records? _____

B. Was company told to retain for at least 5 years, per ordinance? Yes☐ No☐

C. Where are they kept? HSE Library, Building Z 4th floor

30. DO MSD CLASSIFICATIONS NEED TO BE REVISED? Yes☐ No☒

If yes: A. Indicate correct classifications:

SIU ☐ CIU ☐ Surch. ☐ Potential Toxic Waste ☐ Non-Toxic Proc Waste ☐

No Process Discharge ☐ Multi-User ☐ Special Handling/Billing ☐

B. Explain changes: _____

31. SAMPLE POINTS

						DJ(y/n)
SP #		Fed.Reg.		Components:	(refer to updated list on IDS with report)	No
SP #		Fed.Reg.		Components:		N/A
SP #		Fed.Reg.		Components:		N/A
SP #		Fed.Reg.		Components:		N/A
SP #		Fed.Reg.		Components:		N/A

32. ARE ANY SAMPLE POINTS TRAPPED VENTS? Yes☐ No☒

If yes: A. List SPs: _____

B. Was co. informed that T-vents are preferred, and told why? Yes☐ No☐

33. ARE DISCHARGES AT ANY SPs SMALL/IRREGULAR ENOUGH TO ALLOW GRAB SAMPLES? Yes☐ No☒

If yes: A. List SPs and reasons: _____

34. ARE THERE ANY UNSAMPLED DISCHARGES? (list each lateral separately) Yes☐ No☒

Dummy SP #		Components:	
Dummy SP #		Components:	

35. DO ANY SAMPLE POINTS (including Unsampled/Dummy SPs) RECEIVE STORMWATER? Yes☒ No☐

If yes: A. List Sample Points: 003, 008, 009, 010, 011, 080

36. WERE ALL SAMPLE POINTS (except Dummy SPs) OPENED & INSPECTED? No SPs☐ Yes☒ No☐
   A. If any SPs cannot be located or opened, explain: _____
   B. If any SP descript's need to be changed, explain: _____
   C. Was ANY grease or other problem/debris observed in any SP? Yes☐ No☒
   D. If yes to C, list SPs & describe: _____
   E. If yes to C, was company directed to take corrective actions? Yes☐ No☐

37. REVIEW THE SAMPLE POINT MAP! Last map revision date: 6/25/08
   A. Is the map correct and accurate in all its details? Yes☐ No☒
   B If no, what changes are needed: Removal of SP918 & SP932

38. DO INSTRUCTIONS FOR "Contact Prior to Sampling" OR FIELD VISIT "Special Instructions" NEED REVISION? Yes☐ No☒

If yes: A. List needed changes: _____

USE THIS SPACE FOR ANY OTHER COMMENTS/OBSERVATIONS PERTINENT TO YOUR INSPECTION OF THIS SITE.
Pretreatment updates: Oil interceptor has been added as a pretreatment type at SP003 in PIMS. The need is for the newly installed air compressor in Building B. pH adjustment has been added as pretreatment for the following sample points in PIMS: 912, 930, and 933.

Sample Point 918 has been deactivated. All wastewater from this point has been rerouted to the PEG air stripper.

Sample Point 932 has been deactivated. This was the truck loading area where a sample point was set up in case a cat. process discharge was needed. The need never arose, so elimination of the sample point was the logical thing to do.

Priority pollutant updates in PIMS: 1,1-dichloroethane has been changed to (SA), and 1,2-dichloroethane has been changed to (SP). Selenium, Thallium, Hexachlorobenzene, and Naphthalene have been changed from SP to SA. 2,3,7,8-tetrochlordibenzo-p-dioxin has been changed from SA to KA.

Sanitary has been deactivated as a discharge component at SP080. Instead, lab waste has been added at 1,000 GPD. SP080 will still be a combined Ord./Cat. point that includes 2,500 GPD of 439 cat. waste.

The discharge description for SP912 has been changed from "P&E Washdown" to "Non-categorical Process Waste" to better reflect the nature of the discharge.

METROPOLITAN ST. LOUIS SEWER DISTRICT
INDUSTRIAL DATA SHEET - FACILITY INFORMATION

INDUSTRY NAME **MALLINCKRODT INC**
PRIMARY MSD ACCOUNT NO. **2112059600**

Premise Address 3600 N 2nd St
St. Louis MO. 63147

INDUSTRIAL USER CLASSIFICATIONS

03/06/1997	SIU
03/06/1997	CIU
03/06/1997	SCH
03/06/1997	PTW

WUNNENBERG INFO.

Base Map 17D4
Wun: St. Louis City & Co.
Grid: E 18 Page 27

SIU CRITERIA

CAT Process subject to Cat Stds under 40 CFR 40
PR25 Process Disch => 25,000 GPD

GENERAL INFORMATION

Office Mailing Address
3600 N. 2nd Street
St. Louis, MO. 63147

Billing Address
3600 N. 2nd St.
St. Louis, MO. 63147

INSPECTION INFORMATION

Next Due	Insp Rslt	
01/28/2010	RIN	Jason Gill

PERMIT INFORMATION

Issue Date: 05/01/2003
Expire Date: 02/28/2550
Extended Date: 03/24/2004
Writer Fabian Grabski
Issue Date: 06/01/2005
Expire Date: 05/31/2010
Extended Date: 08/07/2005
Writer Fabian Grabski
Issue Date: 06/01/2005
Expire Date: 05/31/2010
Extended Date: 05/31/2006
Writer Fabian Grabski
Issue Date: 06/01/2006
Expire Date: 05/31/2010
Extended Date: 12/21/2006
Writer Fabian Grabski
Issue Date: 06/01/2006
Expire Date: 05/31/2010
Extended Date: 03/18/2007
Writer Fabian Grabski
Issue Date: 06/01/2006
Expire Date: 05/31/2010
Extended Date: 12/31/2007
Writer Doug Mendoza
Issue Date: 06/01/2010
Expire Date: 05/31/2015
Extended Date:
Writer Scott Rehmer
Issue Date: 01/01/2008
Expire Date: 05/31/2010
Extended Date: 01/31/2008
Writer Scott Rehmer
Issue Date: 02/01/2008
Expire Date: 05/31/2010
Extended Date: 06/30/2008
Writer Scott Rehmer
Issue Date: 07/01/2008
Expire Date: 05/31/2010
Extended Date: 05/31/2010
Writer Scott Rehmer

IUQ INFORMATION

IUQ Recvd Date: 08/31/1999
Reviewer: Fabian Grabski
IUQ Recvd Date: 10/04/2004
Reviewer: Jason Gill
IUQ Recvd Date: 12/01/2009
Reviewer: Jason Gill

CONTACTS

BILL	Lisa Meyer	HS&E Engineer	OFF	(314) 654-3374 Ext.
FLD1	Lisa Meyer	HS&E Engineer	FAX	(314) 654-1251 Ext.
	Lisa Meyer	HS&E Engineer	OFF	(314) 654-3374 Ext.
	Lisa Meyer	HS&E Engineer	SWR	(314) 654-2000 Ext.
FLD2	Jeff DeWald	HS&E Engineer	OFF	(314) 654-1294 Ext.
OFF1	Lisa Meyer	HS&E Engineer	OFF	(314) 654-3374 Ext.
OFF2	Jeff DeWald	HS&E Engineer	OFF	(314) 654-1294 Ext.

Report No. PIMS012A 04/16/2010 12:38:47 pm
Data Date & Time: 04/16/2010 12:38:47 pm

METROPOLITAN ST. LOUIS SEWER DISTRICT
INDUSTRIAL DATA SHEET - FACILITY INFORMATION

INDUSTRY NAME **MALLINCKRODT INC**
PRIMARY MSD ACCOUNT NO. **2112059600**

Premise Address 3600 N 2nd St
St. Louis MO. 63147

OPERATIONAL INFORMATION

Work Days:	7			S	M	T	W	T	F	S
1	808	07:00AM	8.0	Y	Y	Y	Y	Y	Y	Y
2	86	03:20PM	8.0	Y	Y	Y	Y	Y	Y	Y
3	84	11:10PM	8.0	Y	Y	Y	Y	Y	Y	Y

Total Emp: 978 **Hrs:** 24.0

OTHER AGENCIES INFORMATION

11/18/1996	MDNR - Hazardous Waste Program	01029
11/19/1996	EPA - Hazardous Waste Program	MOD096726484
11/01/1997	Nuclear Regulatory Commission	24-05804-02
09/28/2005	MSD - Billing Account Number	00118821

NON-SEWERED WASTE

On-Site Storage Y **On-Site Disposal** N **Off-Site Disposal** Y

12/01/2009	Solvents/Thinners	1,109,000	LBS
12/01/2009	Paints or Paint Sludges	1,400	LBS
12/01/2009	Equipment Oils and/or Grease	16,000	LBS
12/01/2009	Acids and/or Alkalies	1,428,000	LBS
12/01/2009	Infectious Waste	600	LBS
12/01/2009	Kitchen/Food Service Grease	1,000	LBS
12/01/2009	Organic Compounds	781,600	LBS

COMMENTS

RAW MATERIALS

EFF DATE	MATERIAL_DESCRIPTION	QUANTITY	UNIT

SIC INFORMATION

SIC	DESCRIPTION
2816	Inorganic Pigments
2819	Industrial Inorganic Chemicals, N.E.C.
2833	Medicinal Chemicals & Botanical Products
2834	Pharmaceutical Preparations
2835	In Vitro & In Vivo Diagnostic Substances
2869	Industrial Organic Chemicals, N.E. C.

PRODUCTS

EFF DATE	DESCRIPTION	UNIT	AVG_PROD	MAX_PROD
05/07/2004	Industrial chemicals			
05/07/2004	FDA drugs			

SEWER ACCOUNTS

Sewer Accounts
2112059600

WATER CONSUMPTION AND WASTEWATER DISCHARGE

Start Date = 01/01/2009 12:00:00AM **End Date =** 01/01/2010 12:59:59PM **Wdays** **Cdays**

Acct. No.			Consumption					Discharge	
2112059600			**CCF's**	**Gallons**				**Gal/ Wday**	**Gal/ Cday**
2112059600	12/18/2008	03/09/2009	176,416	176,416	A	82	82	82	
2112059600	03/10/2009	06/30/2009	159,256	335,672		113	113	195	
2112059600	07/01/2009	10/13/2009	216,226	551,898		105	105	300	
RF	0.96	**Acct. Total**	551,898	412,848,403		300	300	1,321,115	1,321,115
		Facility Total	551,898						

Report No. PIMS012A 04/16/2010 12:38:47 pm
Data Date & Time: 04/16/2010 12:38:47 pm

METROPOLITAN ST. LOUIS SEWER DISTRICT
INDUSTRIAL DATA SHEET - FACILITY INFORMATION

INDUSTRY NAME **MALLINCKRODT INC**
PRIMARY MSD ACCOUNT NO. **2112059600**

Premise Address 3600 N 2nd St
St. Louis MO. 63147

CONNECTION and SAMPLE POINT INFORMATION

LATERAL NO.	Lateral Type	DSMH	Treatment Area	Bissell Point
01	Sanitary Or Combined	17D3 028C	Trunk Sewer	Salisbury

Description Multiple lines from buildings in Plant 6E, East into 12" line

Sewer Route Discharge to Destrehan St and to Salisbury trunk

SAMPLE POINT NO. 001 Ordinance **NPDES Outfall No.**

Description MH (Gatewell) at foot of Destrahan 100' E of RR

Discharge Components	Process Description	Avg Flow	Unit	Max Flow	Unit	RUD	Effective Date
Sanitary		1,000	GPD		GPD	D	12/1/09
Storm Water		0	GPD		GPD	D	12/1/09
	Total Flow Avg =	**1,000**		**Max =**			

CONNECTION and SAMPLE POINT INFORMATION

LATERAL NO.	Lateral Type	DSMH	Treatment Area	Bissell Point
02	Sanitary Or Combined	17D4 072C	Trunk Sewer	Salisbury

Description 6" line SW from Building 96 to Salisbury St

Sewer Route East on Salisbury across Hall St. in 5' brick sewer to trunk, N to treatment plant

SAMPLE POINT NO. 002 Ordinance **NPDES Outfall No.**

Description MH 5' S of bldg #96, 30' E of SP 003, (6" pipe from NE, 3' down)

Discharge Components	Process Description	Avg Flow	Unit	Max Flow	Unit	RUD	Effective Date
Sanitary		2,200	GPD		GPD	D	12/1/09
	Total Flow Avg =	**2,200**		**Max =**			

CONNECTION and SAMPLE POINT INFORMATION

LATERAL NO.	Lateral Type	DSMH	Treatment Area	Bissell Point
04	Sanitary Or Combined	17D4 086C	Trunk Sewer	Salisbury

Description 6" line West from Bldg 98 to Broadway

Sewer Route South on Broadway in 27" pipe to Salisbury, E across Hall St. in 5' brick sewer to trunk, N to treatment plant

SAMPLE POINT NO. 080 Combined (Ord/Cat) **NPDES Outfall No.**

Description Inlet to sump (double MH) N of building #98

Discharge Components	Process Description	Avg Flow	Unit	Max Flow	Unit	RUD	Effective Date
Categorical	439 Sub C PSES (CN-no, NH3 exempt) (CWF-no)	2,500	GPD		GPD	R	12/1/09
Laboratory Waste		1,000	GPD		GPD	D	12/1/09
	Total Flow Avg =	**3,500**		**Max =**			

CONNECTION and SAMPLE POINT INFORMATION

LATERAL NO.	Lateral Type	DSMH	Treatment Area	Bissell Point
05	Sanitary Or Combined	17D4 071C	Trunk Sewer	Salisbury

Description 8" pipe South from Bldg 96 to Salisbury

Sewer Route East on Salisbury across Hall St. in 5' brick sewer to trunk, N to treatment plant

SAMPLE POINT NO. 005 Ordinance **NPDES Outfall No.**

Description MH 5' S of building #96, 30' E of SP 003 (Center pipe, 8" dia., 3' down)

Discharge Components	Process Description	Avg Flow	Unit	Max Flow	Unit	RUD	Effective Date
Non Contact Cooling Water		1,000	GPD		GPD	D	12/1/09
Laboratory Waste	R&D waste (including 439 from bldg 96)	31,000	GPD		GPD	D	12/1/09
	Total Flow Avg =	**32,000**		**Max =**			

METROPOLITAN ST. LOUIS SEWER DISTRICT
INDUSTRIAL DATA SHEET - FACILITY INFORMATION

INDUSTRY NAME **MALLINCKRODT INC**
PRIMARY MSD ACCOUNT NO. **2112059600**

Premise Address 3600 N 2nd St
St. Louis MO. 63147

CONNECTION and SAMPLE POINT INFORMATION

LATERAL NO.	Lateral Type	DSMH	Treatment Area	Bissell Point
06	Sanitary Or Combined	17D4 066C	Trunk Sewer	Salisbury

Description 15" line from Pump St overflow chamber North to Salisbury

Sewer Route East on Salisbury across Hall St. in 5' brick sewer to trunk, N to treatment plant

SAMPLE POINT NO. 008 Ordinance **NPDES Outfall No.**

Description Oveflow chamber on N side of pump station on W side of building T

Discharge Components	Process Description	Avg Flow	Unit	Max Flow	Unit	RUD	Effective Date
Storm Water		0	GPD		GPD	D	12/1/09
Emergency Bypass	Pump station bypass to Salisbury trunk	0	GPD	1,440,000	GPD	D	12/1/09
	Total Flow Avg =	**0**		**Max =**	**1,440,000**		

CONNECTION and SAMPLE POINT INFORMATION

LATERAL NO.	Lateral Type	DSMH	Treatment Area	Bissell Point
10	Sanitary Or Combined	17D4 436C	Trunk Sewer	Interceptor Tunnel

Description 18" line North from neutralization system

Sewer Route E to Interceptor Tunnel, N to treatment plant

SAMPLE POINT NO. 010 Ordinance **NPDES Outfall No.**

Description MH w/square lid 50' N of neutralization control building at Hall & Salisbury

Discharge Components	Process Description	Avg Flow	Unit	Max Flow	Unit	RUD	Effective Date
Categorical	SP's 905,912,915,920,927,930,933,935,936,937,938	184,721	GPD		GPD	R	12/1/09
Non Categorical Process Waste		441,792	GPD		GPD	D	12/1/09
Laboratory Waste		68,000	GPD		GPD	D	12/1/09
Boiler Blowdown		85,000	GPD		GPD	D	12/1/09
Kitchen Waste		2,500	GPD		GPD	D	12/1/09
Regeneration/Reject Water		86,900	GPD		GPD	D	12/1/09
Storm Water		0	GPD		GPD	D	12/1/09
Non Contact Cooling Water		149,000	GPD		GPD	D	12/1/09
Plant & Equipment Washdown		50,000	GPD		GPD	D	12/1/09
Sanitary		75,000	GPD		GPD	D	12/1/09
	Total Flow Avg =	**1,142,913**		**Max =**			

SAMPLE POINT NO. 905 Categorical **NPDES Outfall No.**

Description MH inside building X, 12' W, 5' S of W door (Total flow out)

Discharge Components	Process Description	Avg Flow	Unit	Max Flow	Unit	RUD	Effective Date
Categorical	414 Sub G & H PSES (App A-no)	100,000	GPD		GPD	R	12/1/09
	Total Flow Avg =	**100,000**		**Max =**			

SAMPLE POINT NO. 912 Ordinance **NPDES Outfall No.**

Description Valve on discharge line from outdoor Tank #450 on SE corner of Building 504

Discharge Components	Process Description	Avg Flow	Unit	Max Flow	Unit	RUD	Effective Date
Non Categorical Process Waste	process waste from bldgs 504/505	150,000	GPD		GPD	D	12/1/09
	Total Flow Avg =	**150,000**		**Max =**			

SAMPLE POINT NO. 915 Categorical **NPDES Outfall No.**

Description Valve on E side of T-315 at inside NE corner of bldg 6

Discharge Components	Process Description	Avg Flow	Unit	Max Flow	Unit	RUD	Effective Date
Categorical	439 Sub C PSES (CN-no, MH3 exempt)	2,700	GPD		GPD	R	12/1/09
	Total Flow Avg =	**2,700**		**Max =**			

SAMPLE POINT NO. 920 Categorical **NPDES Outfall No.**

Description Valve on discharge line, outside SW corner of diked area E of bldg 512

Discharge Components	Process Description	Avg Flow	Unit	Max Flow	Unit	RUD	Effective Date

METROPOLITAN ST. LOUIS SEWER DISTRICT
INDUSTRIAL DATA SHEET - FACILITY INFORMATION

INDUSTRY NAME **MALLINCKRODT INC**
PRIMARY MSD ACCOUNT NO. **2112059600**

Premise Address 3600 N 2nd St
St. Louis MO. 63147

Categorical	439 Sub C PSES (CN-no,NH3 exempt) - with SP937	13,000	GPD		GPD	R	12/1/09
	Total Flow Avg =	**13,000**		**Max =**			

SAMPLE POINT NO. 927 Categorical **NPDES Outfall No.**

Description Tank 308 (acid press tank) in bldg 6

Discharge Components	Process Description	Avg Flow	Unit	Max Flow	Unit	RUD	Effective Date
Categorical	439 Sub B PSES	2,700	GPD		GPD	R	12/1/09
	Total Flow Avg =	**2,700**		**Max =**			

SAMPLE POINT NO. 930 Categorical **NPDES Outfall No.**

Description Valve on 4" PVC line inside NW corner of Bldg. 222S, only when sump is discharging from tanks 300 and 355

Discharge Components	Process Description	Avg Flow	Unit	Max Flow	Unit	RUD	Effective Date
Categorical	439 Sub B PSES	650	GPD		GPD	R	12/1/09
	Total Flow Avg =	**650**		**Max =**			

SAMPLE POINT NO. 933 Categorical **NPDES Outfall No.**

Description Valve on Tank #1 10' NW of SE corner of Bldg. 200W - only when disch. 439 waste

Discharge Components	Process Description	Avg Flow	Unit	Max Flow	Unit	RUD	Effective Date
Categorical	439 Sub B PSES	100	GPD		GPD	R	12/1/09
	Total Flow Avg =	**100**		**Max =**			

SAMPLE POINT NO. 935 Categorical **NPDES Outfall No.**

Description 1/2" steel pipe on inside of concrete wall S of North stairs - Bldg 512

Discharge Components	Process Description	Avg Flow	Unit	Max Flow	Unit	RUD	Effective Date
Categorical	Cat. 439 Sub C PSES (CN-no, NH3 exempt)	26,000	GPD		GPD	R	12/1/09
	Total Flow Avg =	**26,000**		**Max =**			

SAMPLE POINT NO. 937 Categorical **NPDES Outfall No.**

Description Valve on 2nd level on W side near pipe bridge N of bldg 501

Discharge Components	Process Description	Avg Flow	Unit	Max Flow	Unit	RUD	Effective Date
Categorical	439 Sub C PSES (CN-no,NH3 exempt) - with SP937	23,000	GPD		GPD	R	12/1/09
	Total Flow Avg =	**23,000**		**Max =**			

SAMPLE POINT NO. 938 Categorical **NPDES Outfall No.**

Description 6" floor drain in far SW corner of room in Building 5, Room 406

Discharge Components	Process Description	Avg Flow	Unit	Max Flow	Unit	RUD	Effective Date
Categorical	439 Sub D PSNS	71	GPD		GPD	R	12/1/09
	Total Flow Avg =	**71**		**Max =**			

CONNECTION and SAMPLE POINT INFORMATION

LATERAL NO.	Lateral Type	DSMH		Treatment Area	Bissell Point
12	Sanitary Or Combined	17D3	016C	Trunk Sewer	Salisbury

Description Line flowing NE under bldg 223 to pump station (Plant 5 overflow)

Sewer Route NE, parallel to Destrehan Street under bldg 223, across Hall Street to pump station, N along Hall St. to STP

SAMPLE POINT NO. 011 Ordinance **NPDES Outfall No.**

Description MH with square lid 18' S from NW corner of bldg 223 under iron ladder

Discharge Components	Process Description	Avg Flow	Unit	Max Flow	Unit	RUD	Effective Date
Storm Water		0	GPD		GPD	D	12/1/09
Emergency Bypass	Overflow from Plant 5	0	GPD	14,000	GPD	D	12/1/09
	Total Flow Avg =	**0**		**Max =**	**14,000**		

METROPOLITAN ST. LOUIS SEWER DISTRICT
INDUSTRIAL DATA SHEET - FACILITY INFORMATION

INDUSTRY NAME **MALLINCKRODT INC**
PRIMARY MSD ACCOUNT NO. **2112059600**

Premise Address 3600 N 2nd St
St. Louis MO. 63147

CONNECTION and SAMPLE POINT INFORMATION

LATERAL NO.	Lateral Type	DSMH	Treatment Area	Bissell Point
99	Sanitary Or Combined	17D4 080C	Trunk Sewer	Salisbury

Description Multiple lines from buildings located West of N 2nd St to Salisbury

Sewer Route East on Salisbury across Hall St. in 5' brick sewer to trunk, N to treatment plant

SAMPLE POINT NO. 003 Ordinance **NPDES Outfall No.**

Description MH in alley at Salisbury, 12' W, 3' S of NW corner of building 91

Discharge Components	Process Description	Avg Flow	Unit	Max Flow	Unit	RUD	Effective Date
Sanitary		5,000	GPD		GPD	D	12/1/09
Laboratory Waste	439 Sub E NA (No Stds) & non-439 R&D	9,000	GPD		GPD	D	12/1/09
Flow From Upstream Sampler SP 009		11,000	GPD		GPD	D	12/1/09
Non Categorical Process Waste	Machine shop, painting, parts washing	4,142	GPD		GPD	D	12/1/09
	Total Flow Avg =	**29,142**		**Max =**			

SAMPLE POINT NO. 009 Ordinance **NPDES Outfall No.**

Description MH in Mallinckrodt St 27' E of Broadway, 4' from S curb

Discharge Components	Process Description	Avg Flow	Unit	Max Flow	Unit	RUD	Effective Date
Flow From Offsite	Offsite W of Broadway	11,000	GPD		GPD	D	12/1/09
	Total Flow Avg =	**11,000**		**Max =**			

SAMPLE POINT NO. 099 Ordinance **NPDES Outfall No.**

Description No sample point available (Represents WW contributions between upstream SP 009 & downstream SP 003)

Discharge Components	Process Description	Avg Flow	Unit	Max Flow	Unit	RUD	Effective Date
Sanitary		37,000	GPD		GPD	D	10/4/04
Non Categorical Process Waste		11,600	GPD		GPD	D	10/4/04
Laboratory Waste	439 Sub E NA (No Stds) & non-439 R&D	9,000	GPD		GPD	D	6/1/05
	Total Flow Avg =	**57,600**		**Max =**			

PRETREATMENT TYPES

SP	EFF_DATE	TYPE	DESCRIPTION
003	12/01/2009	DC35	Oil/Fuel Interceptor
005	11/05/1998	DC37	pH Adjustment / Neutralization
010	11/05/1998	DC37	pH Adjustment / Neutralization
010	11/21/2008	DC35	Oil/Fuel Interceptor
080	11/05/1998	DC37	pH Adjustment / Neutralization
809	10/16/1998	DC5	Carbon Absorption
809	10/16/1998	DC9	Clarification / Settling
809	10/16/1998	DC43	Ultrafiltration
809	10/16/1998	DC7	Chemical Precipitation
912	12/01/2009	DC37	pH Adjustment / Neutralization
920	02/28/2002	DC42	Steam Stripping
930	12/01/2009	DC37	pH Adjustment / Neutralization
933	12/01/2009	DC37	pH Adjustment / Neutralization
935	04/18/2006	DC42	Steam Stripping
937	06/26/2007	DC42	Steam Stripping

METROPOLITAN ST. LOUIS SEWER DISTRICT
INDUSTRIAL DATA SHEET - FACILITY INFORMATION

INDUSTRY NAME **MALLINCKRODT INC**
PRIMARY MSD ACCOUNT NO. **2112059600**

Premise Address 3600 N 2nd St
St. Louis MO. 63147

PRIORITY POLLUTANTS

Pollutant Description	Status	Pollutant Description	Status	Pollutant Description	Status
2,4-Dimethylphenol	SP	2,4-Dinitrotoluene	SP	2,4-Dichlorophenol	SP
2-Nitrophenol	SP	Phenanthrene	SP	N-Nitrosodimethylamine	SP
Hexachloroethane	SP	Hexachlorobutadiene	SP	Diethyl Phthalate	SP
Dieldrin	SP	Bis (2-EthylHexyl) Phthalate	KP	Dibromochloromethane	SP
Bromodichloromethane	SP	1,2-Dichlorobenzene	SP	Trichloroethene	KP
Ethylbenzene	KP	Acrylonitrile	SP	1,4-Dichlorobenzene	SP
1,1,2,2-Tetrachloroethane	KP	Cyanide (Total)	KP	Asbestos (Fibrous)	KP
Antimony (Total)	SP	Silver (Total)	SP	Copper (Total)	KP
Cadmium (Total)	KP	Zinc (Total)	KP	Nickel (Total)	KP
Mercury (Total)	KP	Lead (Total)	KP	Chromium (Total)	KP
Arsenic (Total)	SP	Phenol	KP	Dimethyl Phthalate	KP
4-Nitrophenol	SP	2,4-Dinitrophenol	SP	2-Chlorophenol	SP
Nitrobenzene	SP	Hexachlorocyclopentadiene	SP	Benzo (A) Pyrene	SP
Benzidine	SP	Acrolein	SP	Toluene	KP
Methylene Chloride	KP	Chloromethane	KP	Chlorobenzene	KP
1,3-Dichlorobenzene	SP	1,1,1-Trichloroethane	KP	Vinyl Chloride	KP
Tetrachloroethene	KP	Chloroform	KP	Carbon Tetrachloride	KP
Bromomethane	SP	Benzene	KP	1,2-Dichloroethane	SP
1,1,2-Trichloroethane	KP				

EXTRA STRENGTH SURCHARGE INFORMATION

07/06/2009	BOD	431
07/06/2009	COD	947
07/06/2009	TSS	83

PIMS FACILITY CONTACTS

For Account Number Selecte **2112059600** **MALLINCKRODT INC**

Located at 3600 N 2nd St
St. Louis MO 63147

Address Type

Contact Type	Contact Name		Contact Title	Phone Type	Number	Ext.
Billing Address						
Billing Contact	Lisa	Meyer	HS&E Engineer	OFF	(314)654-3374	
Office Mailing Address						
Office Contact - Primary	Lisa	Meyer	HS&E Engineer	OFF	(314)654-3374	
Office Contact 1st Alt	Jeff	DeWald	HS&E Engineer	OFF	(314)654-1294	
Premise Address						
Field Contact - Primary	Lisa	Meyer	HS&E Engineer	FAX	(314)654-1251	
Field Contact - Primary	Lisa	Meyer	HS&E Engineer	OFF	(314)654-3374	
Field Contact - Primary	Lisa	Meyer	HS&E Engineer	SWR	(314)654-2000	
Field Contact 1st Alt	Jeff	DeWald	HS&E Engineer	OFF	(314)654-1294	

PIMS
REPORT OF FIELD SAMPLING REQUIREMENTS
MALLINCKRODT INC

Account No Entered **2112059600**

SPN	PREMISE ADDRESS	CITY	ST	ZIP
	3600 N 2nd St	St. Louis	MO	63147

001 Project Code: IM = IPD - Company - MSD

Pollutant Group	Poll Code	Pollutant Description	Frequency	Sample Type	End Date
	T208000	Biochemical Oxygen Demand (5 Day)	Once/3 mo	Grab (Auth in lieu of composite)	06/30/2010
	T213000	Chemical Oxygen Demand	Once/3 mo	Grab (Auth in lieu of composite)	06/30/2010
	T237000	pH	Once/3 mo	Grab	06/30/2010
	T247000	Temperature	Once/3 mo	Grab	06/30/2010
	T256000	Total Suspended Solids	Once/3 mo	Grab (Auth in lieu of composite)	06/30/2010

002 Project Code: IM = IPD - Company - MSD

Pollutant Group	Poll Code	Pollutant Description	Frequency	Sample Type	End Date
	T208000	Biochemical Oxygen Demand (5 Day)	Once/3 mo	Comp-Time 04 Hrs	06/30/2010
	T213000	Chemical Oxygen Demand	Once/3 mo	Comp-Time 04 Hrs	06/30/2010
	T225000	Iron (Total)	Once/3 mo	Comp-Time 04 Hrs	06/30/2010
	T237000	pH	Once/3 mo	Grab	06/30/2010
	T247000	Temperature	Once/3 mo	Grab	06/30/2010
	T256000	Total Suspended Solids	Once/3 mo	Comp-Time 04 Hrs	06/30/2010

003 Project Code: IM = IPD - Company - MSD

Pollutant Group	Poll Code	Pollutant Description	Frequency	Sample Type	End Date
	T208000	Biochemical Oxygen Demand (5 Day)	Once/3 mo	Comp-Time 04 Hrs	06/30/2010
	T213000	Chemical Oxygen Demand	Once/3 mo	Comp-Time 04 Hrs	06/30/2010
	T234000	Oil and Grease (Total)	Once/3 mo	Grab	06/30/2010
	T237000	pH	Once/3 mo	Grab	06/30/2010
	T247000	Temperature	Once/3 mo	Grab	06/30/2010
	T256000	Total Suspended Solids	Once/3 mo	Comp-Time 04 Hrs	06/30/2010
	T264000	1,1-Dichloroethane	Once/year	Grab	06/30/2010
	T265000	1,1-Dichloroethene	Once/year	Grab	06/30/2010
	T266000	1,1,1-Trichloroethane	Once/year	Grab	06/30/2010
	T267000	1,1,2-Trichloroethane	Once/year	Grab	06/30/2010
	T268000	1,1,2,2-Tetrachloroethane	Once/year	Grab	06/30/2010
	T269000	1,2-Dichlorobenzene	Once/year	Grab	06/30/2010
	T274000	1,3-Dichlorobenzene	Once/year	Grab	06/30/2010
	T275000	1,4-Dichlorobenzene	Once/year	Grab	06/30/2010
	T276000	2-Nitrophenol	Once/year	Comp-Time 04 Hrs	06/30/2010
	T279000	2-Chlorophenol	Once/year	Comp-Time 04 Hrs	06/30/2010
	T281000	2,4-Dichlorophenol	Once/year	Comp-Time 04 Hrs	06/30/2010
	T282000	2,4-Dimethylphenol	Once/year	Comp-Time 04 Hrs	06/30/2010
	T283000	2,4-Dinitrophenol	Once/year	Comp-Time 04 Hrs	06/30/2010
	T284000	2,4-Dinitrotoluene	Once/year	Comp-Time 04 Hrs	06/30/2010
	T288000	4-Nitrophenol	Once/year	Comp-Time 04 Hrs	06/30/2010
	T299000	Acrolein	Once/year	Grab	06/30/2010
	T300000	Acrylonitrile	Once/year	Grab	06/30/2010
	T309000	Benzene	Once/year	Grab	06/30/2010
	T310000	Benzidine	Once/year	Comp-Time 04 Hrs	06/30/2010
	T312000	Benzo (A) Pyrene	Once/year	Comp-Time 04 Hrs	06/30/2010
	T321000	Bis (2-EthylHexyl) Phthalate	Once/year	Comp-Time 04 Hrs	06/30/2010
	T322000	Bromodichloromethane	Once/year	Grab	06/30/2010
	T324000	Bromomethane	Once/year	Grab	06/30/2010
	T328000	Carbon Tetrachloride	Once/year	Grab	06/30/2010
	T330000	Chlorobenzene	Once/year	Grab	06/30/2010
	T332000	Chloroform	Once/year	Grab	06/30/2010
	T333000	Chloromethane	Once/year	Grab	06/30/2010
	T346000	Dibromochloromethane	Once/year	Grab	06/30/2010
	T347000	Dieldrin	Once/year	Comp-Time 04 Hrs	06/30/2010
	T348000	Diethyl Phthalate	Once/year	Comp-Time 04 Hrs	06/30/2010

Account No Entered **2112059600**

SPN	PREMISE ADDRESS		CITY	ST	ZIP
	T349000	Dimethyl Phthalate	Once/year	Comp-Time 04 Hrs	06/30/2010
	T355000	Ethylbenzene	Once/year	Grab	06/30/2010
	T361000	Hexachlorobenzene	Once/year	Comp-Time 04 Hrs	06/30/2010
	T362000	Hexachlorobutadiene	Once/year	Comp-Time 04 Hrs	06/30/2010
	T363000	Hexachlorocyclopentadiene	Once/year	Comp-Time 04 Hrs	06/30/2010
	T364000	Hexachloroethane	Once/year	Comp-Time 04 Hrs	06/30/2010
	T371000	Methylene Chloride	Once/year	Grab	06/30/2010
	T372000	N-Nitrosodimethylamine	Once/year	Comp-Time 04 Hrs	06/30/2010
	T378000	Nitrobenzene	Once/year	Comp-Time 04 Hrs	06/30/2010
	T387000	Phenanthrene	Once/year	Comp-Time 04 Hrs	06/30/2010
	T388000	Phenol	Once/year	Comp-Time 04 Hrs	06/30/2010
	T397000	Toluene	Once/year	Grab	06/30/2010
	T400000	Trichloroethene	Once/year	Grab	06/30/2010
	T401000	Vinyl Chloride	Once/year	Grab	06/30/2010
Ordinance / 413/433	T999000	Total Toxic Organics	Once/year	Grab	06/30/2010

005 Project Code: IM = IPD - Company - MSD

Pollutant Group	Poll Code	Pollutant Description	Frequency	Sample Type	End Date
	T208000	Biochemical Oxygen Demand (5 Day)	Once/3 mo	Comp-Time 04 Hrs	06/30/2010
	T213000	Chemical Oxygen Demand	Once/3 mo	Comp-Time 04 Hrs	06/30/2010
	T237000	pH	Once/3 mo	Grab	06/30/2010
	T247000	Temperature	Once/3 mo	Grab	06/30/2010
	T256000	Total Suspended Solids	Once/3 mo	Comp-Time 04 Hrs	06/30/2010
	T264000	1,1-Dichloroethane	Once/year	Grab	06/30/2010
	T265000	1,1-Dichloroethene	Once/year	Grab	06/30/2010
	T266000	1,1,1-Trichloroethane	Once/year	Grab	06/30/2010
	T267000	1,1,2-Trichloroethane	Once/year	Grab	06/30/2010
	T268000	1,1,2,2-Tetrachloroethane	Once/year	Grab	06/30/2010
	T269000	1,2-Dichlorobenzene	Once/year	Grab	06/30/2010
	T274000	1,3-Dichlorobenzene	Once/year	Grab	06/30/2010
	T275000	1,4-Dichlorobenzene	Once/year	Grab	06/30/2010
	T276000	2-Nitrophenol	Once/year	Comp-Time 04 Hrs	06/30/2010
	T279000	2-Chlorophenol	Once/year	Comp-Time 04 Hrs	06/30/2010
	T281000	2,4-Dichlorophenol	Once/year	Comp-Time 04 Hrs	06/30/2010
	T282000	2,4-Dimethylphenol	Once/year	Comp-Time 04 Hrs	06/30/2010
	T283000	2,4-Dinitrophenol	Once/year	Comp-Time 04 Hrs	06/30/2010
	T284000	2,4-Dinitrotoluene	Once/year	Comp-Time 04 Hrs	06/30/2010
	T288000	4-Nitrophenol	Once/year	Comp-Time 04 Hrs	06/30/2010
	T299000	Acrolein	Once/year	Grab	06/30/2010
	T300000	Acrylonitrile	Once/year	Grab	06/30/2010
	T309000	Benzene	Once/year	Grab	06/30/2010
	T310000	Benzidine	Once/year	Comp-Time 04 Hrs	06/30/2010
	T312000	Benzo (A) Pyrene	Once/year	Comp-Time 04 Hrs	06/30/2010
	T321000	Bis (2-EthylHexyl) Phthalate	Once/year	Comp-Time 04 Hrs	06/30/2010
	T322000	Bromodichloromethane	Once/year	Grab	06/30/2010
	T324000	Bromomethane	Once/year	Grab	06/30/2010
	T328000	Carbon Tetrachloride	Once/year	Grab	06/30/2010
	T330000	Chlorobenzene	Once/year	Grab	06/30/2010
	T332000	Chloroform	Once/year	Grab	06/30/2010
	T333000	Chloromethane	Once/year	Grab	06/30/2010
	T340000	Cyanide Amenable to Chlorination	Once/3 mo	Grab	06/30/2010
	T346000	Dibromochloromethane	Once/year	Grab	06/30/2010
	T347000	Dieldrin	Once/year	Comp-Time 04 Hrs	06/30/2010
	T348000	Diethyl Phthalate	Once/year	Comp-Time 04 Hrs	06/30/2010
	T349000	Dimethyl Phthalate	Once/year	Comp-Time 04 Hrs	06/30/2010
	T355000	Ethylbenzene	Once/year	Grab	06/30/2010
	T361000	Hexachlorobenzene	Once/year	Comp-Time 04 Hrs	06/30/2010
	T362000	Hexachlorobutadiene	Once/year	Comp-Time 04 Hrs	06/30/2010

Account No Entered **2112059600**

SPN	PREMISE ADDRESS		CITY	ST	ZIP
	T363000	Hexachlorocyclopentadiene	Once/year	Comp-Time 04 Hrs	06/30/2010
	T364000	Hexachloroethane	Once/year	Comp-Time 04 Hrs	06/30/2010
	T371000	Methylene Chloride	Once/year	Grab	06/30/2010
	T372000	N-Nitrosodimethylamine	Once/year	Comp-Time 04 Hrs	06/30/2010
	T378000	Nitrobenzene	Once/year	Comp-Time 04 Hrs	06/30/2010
	T387000	Phenanthrene	Once/year	Comp-Time 04 Hrs	06/30/2010
	T388000	Phenol	Once/year	Comp-Time 04 Hrs	06/30/2010
	T397000	Toluene	Once/year	Grab	06/30/2010
	T400000	Trichloroethene	Once/year	Grab	06/30/2010
	T401000	Vinyl Chloride	Once/year	Grab	06/30/2010
Ordinance / 413/433	T999000	Total Toxic Organics	Once/year	Grab	06/30/2010

008 Project Code: IM = IPD - Company - MSD

Pollutant Group	Poll Code	Pollutant Description	Frequency	Sample Type	End Date
	T208000	Biochemical Oxygen Demand (5 Day)	Once/3 mo	Comp-Time 04 Hrs	06/30/2010
	T213000	Chemical Oxygen Demand	Once/3 mo	Comp-Time 04 Hrs	06/30/2010
	T234000	Oil and Grease (Total)	Once/3 mo	Grab	06/30/2010
	T237000	pH	Once/3 mo	Grab	06/30/2010
	T247000	Temperature	Once/3 mo	Grab	06/30/2010
	T256000	Total Suspended Solids	Once/3 mo	Comp-Time 04 Hrs	06/30/2010

009 Project Code: IM = IPD - Company - MSD

Pollutant Group	Poll Code	Pollutant Description	Frequency	Sample Type	End Date
	T208000	Biochemical Oxygen Demand (5 Day)	Once/3 mo	Comp-Time 04 Hrs	06/30/2010
	T213000	Chemical Oxygen Demand	Once/3 mo	Comp-Time 04 Hrs	06/30/2010
	T234000	Oil and Grease (Total)	Once/3 mo	Grab	06/30/2010
	T237000	pH	Once/3 mo	Grab	06/30/2010
	T247000	Temperature	Once/3 mo	Grab	06/30/2010
	T256000	Total Suspended Solids	Once/3 mo	Comp-Time 04 Hrs	06/30/2010
	T264000	1,1-Dichloroethane	Once/year	Grab	06/30/2010
	T265000	1,1-Dichloroethene	Once/year	Grab	06/30/2010
	T266000	1,1,1-Trichloroethane	Once/year	Grab	06/30/2010
	T267000	1,1,2-Trichloroethane	Once/year	Grab	06/30/2010
	T268000	1,1,2,2-Tetrachloroethane	Once/year	Grab	06/30/2010
	T269000	1,2-Dichlorobenzene	Once/year	Grab	06/30/2010
	T274000	1,3-Dichlorobenzene	Once/year	Grab	06/30/2010
	T275000	1,4-Dichlorobenzene	Once/year	Grab	06/30/2010
	T276000	2-Nitrophenol	Once/year	Comp-Time 04 Hrs	06/30/2010
	T279000	2-Chlorophenol	Once/year	Comp-Time 04 Hrs	06/30/2010
	T281000	2,4-Dichlorophenol	Once/year	Comp-Time 04 Hrs	06/30/2010
	T282000	2,4-Dimethylphenol	Once/year	Comp-Time 04 Hrs	06/30/2010
	T283000	2,4-Dinitrophenol	Once/year	Comp-Time 04 Hrs	06/30/2010
	T284000	2,4-Dinitrotoluene	Once/year	Comp-Time 04 Hrs	06/30/2010
	T288000	4-Nitrophenol	Once/year	Comp-Time 04 Hrs	06/30/2010
	T299000	Acrolein	Once/year	Grab	06/30/2010
	T300000	Acrylonitrile	Once/year	Grab	06/30/2010
	T309000	Benzene	Once/year	Grab	06/30/2010
	T310000	Benzidine	Once/year	Comp-Time 04 Hrs	06/30/2010
	T312000	Benzo (A) Pyrene	Once/year	Comp-Time 04 Hrs	06/30/2010
	T321000	Bis (2-EthylHexyl) Phthalate	Once/year	Comp-Time 04 Hrs	06/30/2010
	T322000	Bromodichloromethane	Once/year	Grab	06/30/2010
	T324000	Bromomethane	Once/year	Grab	06/30/2010
	T328000	Carbon Tetrachloride	Once/year	Grab	06/30/2010
	T330000	Chlorobenzene	Once/year	Grab	06/30/2010
	T332000	Chloroform	Once/year	Grab	06/30/2010
	T333000	Chloromethane	Once/year	Grab	06/30/2010
	T346000	Dibromochloromethane	Once/year	Grab	06/30/2010

Account No Entered **2112059600**

SPN	PREMISE ADDRESS		CITY	ST	ZIP
	T347000	Dieldrin	Once/year	Comp-Time 04 Hrs	06/30/2010
	T348000	Diethyl Phthalate	Once/year	Comp-Time 04 Hrs	06/30/2010
	T355000	Ethylbenzene	Once/year	Grab	06/30/2010
	T361000	Hexachlorobenzene	Once/year	Comp-Time 04 Hrs	06/30/2010
	T362000	Hexachlorobutadiene	Once/year	Comp-Time 04 Hrs	06/30/2010
	T363000	Hexachlorocyclopentadiene	Once/year	Comp-Time 04 Hrs	06/30/2010
	T364000	Hexachloroethane	Once/year	Comp-Time 04 Hrs	06/30/2010
	T371000	Methylene Chloride	Once/year	Grab	06/30/2010
	T372000	N-Nitrosodimethylamine	Once/year	Comp-Time 04 Hrs	06/30/2010
	T378000	Nitrobenzene	Once/year	Comp-Time 04 Hrs	06/30/2010
	T387000	Phenanthrene	Once/year	Comp-Time 04 Hrs	06/30/2010
	T388000	Phenol	Once/year	Comp-Time 04 Hrs	06/30/2010
	T397000	Toluene	Once/year	Grab	06/30/2010
	T400000	Trichloroethene	Once/year	Grab	06/30/2010
	T401000	Vinyl Chloride	Once/year	Grab	06/30/2010
	T449000	Diethylamine	Once/year	Grab	06/30/2010
Ordinance / 413/433	T999000	Total Toxic Organics	Once/year	Grab	06/30/2010

010 Project Code: IM = IPD - Company - MSD

Pollutant Group	Poll Code	Pollutant Description	Frequency	Sample Type	End Date
	T208000	Biochemical Oxygen Demand (5 Day)	Once/3 mo	Comp-Time 04 Hrs	06/30/2010
	T213000	Chemical Oxygen Demand	Once/3 mo	Comp-Time 04 Hrs	06/30/2010
	T234000	Oil and Grease (Total)	Once/3 mo	Grab	06/30/2010
	T237000	pH	Once/3 mo	Grab	06/30/2010
	T247000	Temperature	Once/3 mo	Grab	06/30/2010
	T256000	Total Suspended Solids	Once/3 mo	Comp-Time 04 Hrs	06/30/2010
	T264000	1,1-Dichloroethane	Once/year	Grab	06/30/2010
	T265000	1,1-Dichloroethene	Once/year	Grab	06/30/2010
	T266000	1,1,1-Trichloroethane	Once/year	Grab	06/30/2010
	T267000	1,1,2-Trichloroethane	Once/year	Grab	06/30/2010
	T268000	1,1,2,2-Tetrachloroethane	Once/year	Grab	06/30/2010
	T269000	1,2-Dichlorobenzene	Once/year	Grab	06/30/2010
	T274000	1,3-Dichlorobenzene	Once/year	Grab	06/30/2010
	T275000	1,4-Dichlorobenzene	Once/year	Grab	06/30/2010
	T276000	2-Nitrophenol	Once/year	Comp-Time 04 Hrs	06/30/2010
	T279000	2-Chlorophenol	Once/year	Comp-Time 04 Hrs	06/30/2010
	T281000	2,4-Dichlorophenol	Once/year	Comp-Time 04 Hrs	06/30/2010
	T282000	2,4-Dimethylphenol	Once/year	Comp-Time 04 Hrs	06/30/2010
	T283000	2,4-Dinitrophenol	Once/year	Comp-Time 04 Hrs	06/30/2010
	T284000	2,4-Dinitrotoluene	Once/year	Comp-Time 04 Hrs	06/30/2010
	T288000	4-Nitrophenol	Once/year	Comp-Time 04 Hrs	06/30/2010
	T299000	Acrolein	Once/year	Grab	06/30/2010
	T300000	Acrylonitrile	Once/year	Grab	06/30/2010
	T309000	Benzene	Once/year	Grab	06/30/2010
	T310000	Benzidine	Once/year	Comp-Time 04 Hrs	06/30/2010
	T312000	Benzo (A) Pyrene	Once/year	Comp-Time 04 Hrs	06/30/2010
	T321000	Bis (2-EthylHexyl) Phthalate	Once/year	Comp-Time 04 Hrs	06/30/2010
	T322000	Bromodichloromethane	Once/year	Grab	06/30/2010
	T324000	Bromomethane	Once/year	Grab	06/30/2010
	T328000	Carbon Tetrachloride	Once/year	Grab	06/30/2010
	T330000	Chlorobenzene	Once/year	Grab	06/30/2010
	T332000	Chloroform	Once/year	Grab	06/30/2010
	T333000	Chloromethane	Once/year	Grab	06/30/2010
	T335000	Chromium (Total)	Once/year	Comp-Time 04 Hrs	06/30/2010
	T339000	Copper (Total)	Once/year	Comp-Time 04 Hrs	06/30/2010
	T346000	Dibromochloromethane	Once/year	Grab	06/30/2010
	T347000	Dieldrin	Once/year	Comp-Time 04 Hrs	06/30/2010
	T348000	Diethyl Phthalate	Once/year	Comp-Time 04 Hrs	06/30/2010

Account No Entered **2112059600**

SPN	PREMISE ADDRESS		CITY	ST	ZIP
	T349000	Dimethyl Phthalate	Once/year	Comp-Time 04 Hrs	06/30/2010
	T355000	Ethylbenzene	Once/year	Grab	06/30/2010
	T361000	Hexachlorobenzene	Once/year	Comp-Time 04 Hrs	06/30/2010
	T362000	Hexachlorobutadiene	Once/year	Comp-Time 04 Hrs	06/30/2010
	T363000	Hexachlorocyclopentadiene	Once/year	Comp-Time 04 Hrs	06/30/2010
	T364000	Hexachloroethane	Once/year	Comp-Time 04 Hrs	06/30/2010
	T371000	Methylene Chloride	Once/year	Grab	06/30/2010
	T372000	N-Nitrosodimethylamine	Once/year	Comp-Time 04 Hrs	06/30/2010
	T377000	Nickel (Total)	Once/year	Comp-Time 04 Hrs	06/30/2010
	T378000	Nitrobenzene	Once/year	Comp-Time 04 Hrs	06/30/2010
	T387000	Phenanthrene	Once/year	Comp-Time 04 Hrs	06/30/2010
	T388000	Phenol	Once/year	Comp-Time 04 Hrs	06/30/2010
	T397000	Toluene	Once/year	Grab	06/30/2010
	T400000	Trichloroethene	Once/year	Grab	06/30/2010
	T401000	Vinyl Chloride	Once/year	Grab	06/30/2010
	T403000	Zinc (Total)	Once/year	Comp-Time 04 Hrs	06/30/2010
Ordinance / 413/433	T999000	Total Toxic Organics	Once/year	Grab	06/30/2010

011 Project Code: IM= IPD - Company - MSD

Pollutant Group	Poll Code	Pollutant Description	Frequency	Sample Type	End Date
	T208000	Biochemical Oxygen Demand (5 Day)	Once/3 mo	Comp-Time 04 Hrs	06/30/2010
	T213000	Chemical Oxygen Demand	Once/3 mo	Comp-Time 04 Hrs	06/30/2010
	T234000	Oil and Grease (Total)	Once/3 mo	Grab	06/30/2010
	T237000	pH	Once/3 mo	Grab	06/30/2010
	T247000	Temperature	Once/3 mo	Grab	06/30/2010
	T256000	Total Suspended Solids	Once/3 mo	Comp-Time 04 Hrs	06/30/2010

080 Project Code: IM= IPD - Company - MSD

Pollutant Group	Poll Code	Pollutant Description	Frequency	Sample Type	End Date
	T208000	Biochemical Oxygen Demand (5 Day)	Once/3 mo	Comp-Time 04 Hrs	06/30/2010
	T213000	Chemical Oxygen Demand	Once/3 mo	Comp-Time 04 Hrs	06/30/2010
	T234000	Oil and Grease (Total)	Once/3 mo	Grab	06/30/2010
	T237000	pH	Once/3 mo	Grab	06/30/2010
	T247000	Temperature	Once/3 mo	Grab	06/30/2010
	T256000	Total Suspended Solids	Once/3 mo	Comp-Time 04 Hrs	06/30/2010
	T264000	1,1-Dichloroethane	Once/year	Grab	06/30/2010
	T265000	1,1-Dichloroethene	Once/year	Grab	06/30/2010
	T266000	1,1,1-Trichloroethane	Once/year	Grab	06/30/2010
	T267000	1,1,2-Trichloroethane	Once/year	Grab	06/30/2010
	T268000	1,1,2,2-Tetrachloroethane	Once/year	Grab	06/30/2010
	T269000	1,2-Dichlorobenzene	Once/year	Grab	06/30/2010
	T270000	1,2-Dichloroethane	Once/year	Grab	06/30/2010
	T274000	1,3-Dichlorobenzene	Once/year	Grab	06/30/2010
	T275000	1,4-Dichlorobenzene	Once/year	Grab	06/30/2010
	T276000	2-Nitrophenol	Once/year	Comp-Time 04 Hrs	06/30/2010
	T279000	2-Chlorophenol	Once/year	Comp-Time 04 Hrs	06/30/2010
	T281000	2,4-Dichlorophenol	Once/year	Comp-Time 04 Hrs	06/30/2010
	T282000	2,4-Dimethylphenol	Once/year	Comp-Time 04 Hrs	06/30/2010
	T283000	2,4-Dinitrophenol	Once/year	Comp-Time 04 Hrs	06/30/2010
	T284000	2,4-Dinitrotoluene	Once/year	Comp-Time 04 Hrs	06/30/2010
	T288000	4-Nitrophenol	Once/year	Comp-Time 04 Hrs	06/30/2010
	T299000	Acrolein	Once/year	Grab	06/30/2010
	T300000	Acrylonitrile	Once/year	Grab	06/30/2010
	T309000	Benzene	Once/year	Grab	06/30/2010
	T310000	Benzidine	Once/year	Comp-Time 04 Hrs	06/30/2010
	T312000	Benzo (A) Pyrene	Once/year	Comp-Time 04 Hrs	06/30/2010
	T321000	Bis (2-EthylHexyl) Phthalate	Once/year	Comp-Time 04 Hrs	06/30/2010

Account No Entered **2112059600**

SPN	PREMISE ADDRESS	CITY	ST	ZIP

	T322000	Bromodichloromethane	Once/year	Grab	06/30/2010
	T324000	Bromomethane	Once/year	Grab	06/30/2010
	T328000	Carbon Tetrachloride	Once/year	Grab	06/30/2010
	T330000	Chlorobenzene	Once/year	Grab	06/30/2010
	T332000	Chloroform	Once/year	Grab	06/30/2010
	T333000	Chloromethane	Once/year	Grab	06/30/2010
	T340000	Cyanide Amenable to Chlorination	Once/year	Grab	06/30/2010
	T341000	Cyanide (Total)	Once/year	Grab	06/30/2010
	T346000	Dibromochloromethane	Once/year	Grab	06/30/2010
	T347000	Dieldrin	Once/year	Comp-Time 04 Hrs	06/30/2010
	T348000	Diethyl Phthalate	Once/year	Comp-Time 04 Hrs	06/30/2010
	T349000	Dimethyl Phthalate	Once/year	Comp-Time 04 Hrs	06/30/2010
	T355000	Ethylbenzene	Once/year	Grab	06/30/2010
	T361000	Hexachlorobenzene	Once/year	Comp-Time 04 Hrs	06/30/2010
	T362000	Hexachlorobutadiene	Once/year	Comp-Time 04 Hrs	06/30/2010
	T363000	Hexachlorocyclopentadiene	Once/year	Comp-Time 04 Hrs	06/30/2010
	T364000	Hexachloroethane	Once/year	Comp-Time 04 Hrs	06/30/2010
	T371000	Methylene Chloride	Once/year	Grab	06/30/2010
	T372000	N-Nitrosodimethylamine	Once/year	Comp-Time 04 Hrs	06/30/2010
	T378000	Nitrobenzene	Once/year	Comp-Time 04 Hrs	06/30/2010
	T387000	Phenanthrene	Once/year	Comp-Time 04 Hrs	06/30/2010
	T388000	Phenol	Once/year	Comp-Time 04 Hrs	06/30/2010
	T397000	Toluene	Once/year	Grab	06/30/2010
	T400000	Trichloroethene	Once/year	Grab	06/30/2010
	T401000	Vinyl Chloride	Once/year	Grab	06/30/2010
	T430000	Acetone	Once/year	Grab	06/30/2010
	T435000	Xylene	Once/year	Grab	06/30/2010
	T437000	4-Methyl-2-Pentanone	Once/year	Grab	06/30/2010
	T438000	Isobutyraldehyde	Once/year	Grab	06/30/2010
	T439000	n-Amyl Acetate	Once/year	Grab	06/30/2010
	T440000	n-Butyl Acetate	Once/year	Grab	06/30/2010
	T441000	Ethyl Acetate	Once/year	Grab	06/30/2010
	T442000	Isopropyl Acetate	Once/year	Grab	06/30/2010
	T443000	Methyl Formate	Once/year	Grab	06/30/2010
	T445000	Isopropyl Ether	Once/year	Grab	06/30/2010
	T446000	Tetrahydrofuran	Once/year	Grab	06/30/2010
	T447000	n-Hexane	Once/year	Grab	06/30/2010
	T448000	n-Heptane	Once/year	Grab	06/30/2010
	T449000	Diethylamine	Once/year	Grab	06/30/2010
	T550000	Triethylamine	Once/year	Grab	06/30/2010
Ordinance / 413/433	T999000	Total Toxic Organics	Once/year	Grab	06/30/2010

905 Project Code: IM = IPD - Company - MSD

Pollutant Group	Poll Code	Pollutant Description	Frequency	Sample Type	End Date
	T263000	(cis & trans) 1,3-Dichloropropene	Once/year	Grab	06/30/2010
	T264000	1,1-Dichloroethane	Once/year	Grab	06/30/2010
	T265000	1,1-Dichloroethene	Once/year	Grab	06/30/2010
	T266000	1,1,1-Trichloroethane	Once/year	Grab	06/30/2010
	T267000	1,1,2-Trichloroethane	Once/year	Grab	06/30/2010
	T269000	1,2-Dichlorobenzene	Once/year	Grab	06/30/2010
	T270000	1,2-Dichloroethane	Once/year	Grab	06/30/2010
	T271000	1,2-Dichloropropane	Once/year	Grab	06/30/2010
	T273000	1,2,4-Trichlorobenzene	Once/year	Grab	06/30/2010
	T274000	1,3-Dichlorobenzene	Once/year	Grab	06/30/2010
	T275000	1,4-Dichlorobenzene	Once/year	Grab	06/30/2010
	T276000	2-Nitrophenol	Once/year	Grab	06/30/2010
	T288000	4-Nitrophenol	Once/year	Grab	06/30/2010
	T295000	4,6-Dinitro-2-Methylphenol	Once/year	Grab	06/30/2010

Account No Entered **2112059600**

SPN	PREMISE ADDRESS	CITY	ST	ZIP

	T297000	Acenaphthene	Once/year	Grab	06/30/2010
	T302000	Anthracene	Once/year	Grab	06/30/2010
	T309000	Benzene	Once/year	Grab	06/30/2010
	T310000	Benzidine	Once/year	Grab	06/30/2010
	T321000	Bis (2-EthylHexyl) Phthalate	Once/year	Grab	06/30/2010
	T328000	Carbon Tetrachloride	Once/year	Grab	06/30/2010
	T330000	Chlorobenzene	Once/year	Grab	06/30/2010
	T331000	Chloroethane	Once/year	Grab	06/30/2010
	T332000	Chloroform	Once/year	Grab	06/30/2010
	T333000	Chloromethane	Once/year	Grab	06/30/2010
	T343000	Di-n-butyl Phthalate	Once/year	Grab	06/30/2010
	T348000	Diethyl Phthalate	Once/year	Grab	06/30/2010
	T349000	Dimethyl Phthalate	Once/year	Grab	06/30/2010
	T355000	Ethylbenzene	Once/year	Grab	06/30/2010
	T356000	Fluoranthene	Once/year	Grab	06/30/2010
	T357000	Fluorene	Once/year	Grab	06/30/2010
	T361000	Hexachlorobenzene	Once/year	Grab	06/30/2010
	T362000	Hexachlorobutadiene	Once/year	Grab	06/30/2010
	T364000	Hexachloroethane	Once/year	Grab	06/30/2010
	T371000	Methylene Chloride	Once/year	Grab	06/30/2010
	T375000	Naphthalene	Once/year	Grab	06/30/2010
	T378000	Nitrobenzene	Once/year	Grab	06/30/2010
	T387000	Phenanthrene	Once/year	Grab	06/30/2010
	T389000	Pyrene	Once/year	Grab	06/30/2010
	T394000	Tetrachloroethene	Once/year	Grab	06/30/2010
	T397000	Toluene	Once/year	Grab	06/30/2010
	T399000	Trans-1,2-Dichloroethene	Once/year	Grab	06/30/2010
	T400000	Trichloroethene	Once/year	Grab	06/30/2010
	T401000	Vinyl Chloride	Once/year	Grab	06/30/2010

912 Project Code: IM= IPD - Company - MSD

Pollutant Group	Poll Code	Pollutant Description	Frequency	Sample Type	End Date
	T553000	N,N-Dimethyl Acetamide	Once/year	Grab	06/30/2010

915 Project Code: IM= IPD - Company - MSD

Pollutant Group	Poll Code	Pollutant Description	Frequency	Sample Type	End Date
	T269000	1,2-Dichlorobenzene	Once/year	Grab	06/30/2010
	T270000	1,2-Dichloroethane	Once/year	Grab	06/30/2010
	T309000	Benzene	Once/year	Grab	06/30/2010
	T330000	Chlorobenzene	Once/year	Grab	06/30/2010
	T332000	Chloroform	Once/year	Grab	06/30/2010
	T371000	Methylene Chloride	Once/year	Grab	06/30/2010
	T397000	Toluene	Once/year	Grab	06/30/2010
	T430000	Acetone	Once/year	Grab	06/30/2010
	T435000	Xylene	Once/year	Grab	06/30/2010
	T437000	4-Methyl-2-Pentanone	Once/year	Grab	06/30/2010
	T438000	Isobutyraldehyde	Once/year	Grab	06/30/2010
	T439000	n-Amyl Acetate	Once/year	Grab	06/30/2010
	T440000	n-Butyl Acetate	Once/year	Grab	06/30/2010
	T441000	Ethyl Acetate	Once/year	Grab	06/30/2010
	T442000	Isopropyl Acetate	Once/year	Grab	06/30/2010
	T443000	Methyl Formate	Once/year	Grab	06/30/2010
	T445000	Isopropyl Ether	Once/year	Grab	06/30/2010
	T446000	Tetrahydrofuran	Once/year	Grab	06/30/2010
	T447000	n-Hexane	Once/year	Grab	06/30/2010
	T448000	n-Heptane	Once/year	Grab	06/30/2010
	T449000	Diethylamine	Once/year	Grab	06/30/2010

Account No Entered **2112059600**

SPN	PREMISE ADDRESS	CITY	ST	ZIP

	T550000	Triethylamine	Once/year	Grab	06/30/2010

920 Project Code: IM= IPD - Company - MSD

Pollutant Group	Poll Code	Pollutant Description	Frequency	Sample Type	End Date
	T269000	1,2-Dichlorobenzene	Once/year	Grab	06/30/2010
	T270000	1,2-Dichloroethane	Once/year	Grab	06/30/2010
	T309000	Benzene	Once/year	Grab	06/30/2010
	T330000	Chlorobenzene	Once/year	Grab	06/30/2010
	T332000	Chloroform	Once/year	Grab	06/30/2010
	T371000	Methylene Chloride	Once/year	Grab	06/30/2010
	T397000	Toluene	Once/year	Grab	06/30/2010
	T430000	Acetone	Once/year	Grab	06/30/2010
	T435000	Xylene	Once/year	Grab	06/30/2010
	T437000	4-Methyl-2-Pentanone	Once/year	Grab	06/30/2010
	T438000	Isobutyraldehyde	Once/year	Grab	06/30/2010
	T439000	n-Amyl Acetate	Once/year	Grab	06/30/2010
	T440000	n-Butyl Acetate	Once/year	Grab	06/30/2010
	T441000	Ethyl Acetate	Once/year	Grab	06/30/2010
	T442000	Isopropyl Acetate	Once/year	Grab	06/30/2010
	T443000	Methyl Formate	Once/year	Grab	06/30/2010
	T445000	Isopropyl Ether	Once/year	Grab	06/30/2010
	T446000	Tetrahydrofuran	Once/year	Grab	06/30/2010
	T447000	n-Hexane	Once/year	Grab	06/30/2010
	T448000	n-Heptane	Once/year	Grab	06/30/2010
	T449000	Diethylamine	Once/year	Grab	06/30/2010
	T550000	Triethylamine	Once/year	Grab	06/30/2010

927 Project Code: IM= IPD - Company - MSD

Pollutant Group	Poll Code	Pollutant Description	Frequency	Sample Type	End Date
	T371000	Methylene Chloride	Once/year	Grab	06/30/2010
	T430000	Acetone	Once/year	Grab	06/30/2010
	T439000	n-Amyl Acetate	Once/year	Grab	06/30/2010
	T441000	Ethyl Acetate	Once/year	Grab	06/30/2010
	T442000	Isopropyl Acetate	Once/year	Grab	06/30/2010

930 Project Code: IM= IPD - Company - MSD

Pollutant Group	Poll Code	Pollutant Description	Frequency	Sample Type	End Date
	T371000	Methylene Chloride	Once/year	Grab	06/30/2010
	T430000	Acetone	Once/year	Grab	06/30/2010
	T439000	n-Amyl Acetate	Once/year	Grab	06/30/2010
	T441000	Ethyl Acetate	Once/year	Grab	06/30/2010
	T442000	Isopropyl Acetate	Once/year	Grab	06/30/2010

933 Project Code: IM= IPD - Company - MSD

Pollutant Group	Poll Code	Pollutant Description	Frequency	Sample Type	End Date
	T371000	Methylene Chloride	Once/year	Grab	06/30/2010
	T430000	Acetone	Once/year	Grab	06/30/2010
	T439000	n-Amyl Acetate	Once/year	Grab	06/30/2010
	T441000	Ethyl Acetate	Once/year	Grab	06/30/2010
	T442000	Isopropyl Acetate	Once/year	Grab	06/30/2010

935 Project Code: IM= IPD - Company - MSD

Pollutant Group	Poll Code	Pollutant Description	Frequency	Sample Type	End Date
	T269000	1,2-Dichlorobenzene	Once/year	Grab	06/30/2010

Account No Entered **2112059600**

SPN	PREMISE ADDRESS	CITY	ST	ZIP

T270000	1,2-Dichloroethane	Once/year	Grab	06/30/2010
T309000	Benzene	Once/year	Grab	06/30/2010
T330000	Chlorobenzene	Once/year	Grab	06/30/2010
T332000	Chloroform	Once/year	Grab	06/30/2010
T371000	Methylene Chloride	Once/year	Grab	06/30/2010
T397000	Toluene	Once/year	Grab	06/30/2010
T430000	Acetone	Once/year	Grab	06/30/2010
T435000	Xylene	Once/year	Grab	06/30/2010
T437000	4-Methyl-2-Pentanone	Once/year	Grab	06/30/2010
T438000	Isobutyraldehyde	Once/year	Grab	06/30/2010
T439000	n-Amyl Acetate	Once/year	Grab	06/30/2010
T440000	n-Butyl Acetate	Once/year	Grab	06/30/2010
T441000	Ethyl Acetate	Once/year	Grab	06/30/2010
T442000	Isopropyl Acetate	Once/year	Grab	06/30/2010
T443000	Methyl Formate	Once/year	Grab	06/30/2010
T445000	Isopropyl Ether	Once/year	Grab	06/30/2010
T446000	Tetrahydrofuran	Once/year	Grab	06/30/2010
T447000	n-Hexane	Once/year	Grab	06/30/2010
T448000	n-Heptane	Once/year	Grab	06/30/2010
T449000	Diethylamine	Once/year	Grab	06/30/2010
T550000	Triethylamine	Once/year	Grab	06/30/2010

936 Project Code: IM = IPD - Company - MSD

Pollutant Group	Poll Code	Pollutant Description	Frequency	Sample Type	End Date
	T269000	1,2-Dichlorobenzene	Once/year	Grab	06/30/2010
	T270000	1,2-Dichloroethane	Once/year	Grab	06/30/2010
	T309000	Benzene	Once/year	Grab	06/30/2010
	T330000	Chlorobenzene	Once/year	Grab	06/30/2010
	T332000	Chloroform	Once/year	Grab	06/30/2010
	T371000	Methylene Chloride	Once/year	Grab	06/30/2010
	T397000	Toluene	Once/year	Grab	06/30/2010
	T430000	Acetone	Once/year	Grab	06/30/2010
	T435000	Xylene	Once/year	Grab	06/30/2010
	T437000	4-Methyl-2-Pentanone	Once/year	Grab	06/30/2010
	T438000	Isobutyraldehyde	Once/year	Grab	06/30/2010
	T439000	n-Amyl Acetate	Once/year	Grab	06/30/2010
	T440000	n-Butyl Acetate	Once/year	Grab	06/30/2010
	T441000	Ethyl Acetate	Once/year	Grab	06/30/2010
	T442000	Isopropyl Acetate	Once/year	Grab	06/30/2010
	T443000	Methyl Formate	Once/year	Grab	06/30/2010
	T445000	Isopropyl Ether	Once/year	Grab	06/30/2010
	T446000	Tetrahydrofuran	Once/year	Grab	06/30/2010
	T447000	n-Hexane	Once/year	Grab	06/30/2010
	T448000	n-Heptane	Once/year	Grab	06/30/2010
	T449000	Diethylamine	Once/year	Grab	06/30/2010
	T550000	Triethylamine	Once/year	Grab	06/30/2010

937 Project Code: IM = IPD - Company - MSD

Pollutant Group	Poll Code	Pollutant Description	Frequency	Sample Type	End Date
	T269000	1,2-Dichlorobenzene	Once/year	Grab	06/30/2010
	T270000	1,2-Dichloroethane	Once/year	Grab	06/30/2010
	T309000	Benzene	Once/year	Grab	06/30/2010
	T330000	Chlorobenzene	Once/year	Grab	06/30/2010
	T332000	Chloroform	Once/year	Grab	06/30/2010
	T341000	Cyanide (Total)	Once/year	Grab	06/30/2010
	T371000	Methylene Chloride	Once/year	Grab	06/30/2010
	T397000	Toluene	Once/year	Grab	06/30/2010

Account No Entered **2112059600**

SPN	PREMISE ADDRESS	CITY	ST	ZIP

T430000	Acetone	Once/year	Grab	06/30/2010
T435000	Xylene	Once/year	Grab	06/30/2010
T437000	4-Methyl-2-Pentanone	Once/year	Grab	06/30/2010
T438000	Isobutyraldehyde	Once/year	Grab	06/30/2010
T439000	n-Amyl Acetate	Once/year	Grab	06/30/2010
T440000	n-Butyl Acetate	Once/year	Grab	06/30/2010
T441000	Ethyl Acetate	Once/year	Grab	06/30/2010
T442000	Isopropyl Acetate	Once/year	Grab	06/30/2010
T443000	Methyl Formate	Once/year	Grab	06/30/2010
T445000	Isopropyl Ether	Once/year	Grab	06/30/2010
T446000	Tetrahydrofuran	Once/year	Grab	06/30/2010
T447000	n-Hexane	Once/year	Grab	06/30/2010
T448000	n-Heptane	Once/year	Grab	06/30/2010
T449000	Diethylamine	Once/year	Grab	06/30/2010
T550000	Triethylamine	Once/year	Grab	06/30/2010

938 Project Code: IM = IPD - Company - MSD

Pollutant Group	Poll Code	Pollutant Description	Frequency	Sample Type	End Date
	T371000	Methylene Chloride	Once/year	Grab	06/30/2010
	T430000	Acetone	Once/year	Grab	06/30/2010
	T439000	n-Amyl Acetate	Once/year	Grab	06/30/2010
	T441000	Ethyl Acetate	Once/year	Grab	06/30/2010
	T442000	Isopropyl Acetate	Once/year	Grab	06/30/2010

SR
1-29
30

COVIDIEN

January 28, 2010

Mr. Doug Mendoza
Metropolitan St. Louis Sewer District
Department of Environmental Compliance
10 East Grand Avenue
St. Louis, MO 63147

Re: 2009 4th Quarter Self-Monitoring Report for Permit No. 21120596-2.1

Dear Mr. Mendoza,

Please find enclosed the 2009 4th Quarter Self Monitoring report for Mallinckrodt Inc.

The following sample points received no pharmaceutical process water flow during the fourth quarter: SP008, SP918, SP930, SP932, SP933 and SP935.

A maintenance related power outage occurred on October 21, 2009 which resulted in a wastewater overflow from SP011. Wastewater sampling data and pH monitoring data from this event is included in this report.

As was reported to you in a follow-up letter on November 20, 2009, a chloroform (CAS #67-66-3) release occurred at the site on November 16, 2009. The release was in excess of the chloroform reportable quantity of 10 pounds. This material is also listed as an Extremely Hazardous Substance. It was initially believed that the material had been contained in a sump area. It was later discovered that the material, approximately 53 gallons or 617 pounds of chloroform had been released to a sewer system which discharges to MSD.

On December 23, 2009, a follow-up letter was written to your office to detail an overflow event from SP011 that occurred on December 17, 2009 at approximately 0400. On December 17, 2009 overflow samples were taken at 0455 and pH readings were collected at outfall SP011 every thirty minutes beginning at 0455. pH was 5.0 at 0455 and 6.0 at 0525.

RECEIVED
JAN 2 h 2010
DIVISION OF
ENVIRONMENTAL COMPLIANCE

COVIDIEN/MALLINCKRODT
3600 NORTH SECOND STREET
ST. LOUIS, MO 63147

TELEPHONE: 314-654-2000
FAX: 314-654-1251

COVIDIEN

Regarding Special Certification and Reporting Requirements C.6., Certification of No Cyanide under 439, the plant had one drum of Cyanogen Bromide on site during the reporting period. This material was used during a new pharmaceutical product under development in Building 97. A Special Discharge request was received for the discharge of wastewater from this process on September 3 with a 30 day extension granted on October 7, 2009. From October 7 through October 29, six discharges to the plant's PEG treatment system occurred after sampling for cyanide was approved by MSD. The total amount discharged from this process was 2700 gallons. The site no longer has cyanogen bromide on site.

If you have any questions or require more detailed information, please contact me at 314.654.3374.

Sincerely,

Lisa Meyer
Senior HSE Engineer

ENCLOSURES

RECEIVED
JAN 2 6 2010
DIVISION OF
ENVIRONMENTAL COMPLIANCE

COVIDIEN/MALLINCKRODT
3600 NORTH SECOND STREET
ST. LOUIS, MO 63147

TELEPHONE: 314-654-2000
FAX: 314-654-1251

METROPOLITAN ST. LOUIS SEWER DISTRICT
INDUSTRIAL USER RADIOACTIVE MATERIALS DISCHARGE REPORT

PART I: IDENTIFYING INFORMATION

Company Name: Mallinckrodt - Covidien

Permit No: 21120596-00

Premise Address: 3600 N Second St. St. Louis, MO 63147

Reporting Period: ☐(JAN-MAR) ☐(APR-JUNE) ☐(JULY-SEPT) ☐(OCT-DEC)

PART II: RECORD OF DISPOSAL OF RADIOACTIVE MATERIALS TO THE SEWER SYSTEM

RADIONUCLIDE	ACTIVITY DISCHARGED (millicuries)
TOTAL ACTIVITY DISCHARGED:	0

PART III: CERTIFICATION STATEMENTS

Place your initials in the box under item A.
Everyone must complete the information under items A & B and sign this report.

(A.) CERTIFICATION OF COMPLIANCE WITH STATE AND FEDERAL REGULATIONS

[RP] I certify that to the best of my knowledge & belief, all requirements of 10 CFR Part 20.2003 and 19 CSR Part 20-10.090 governing disposal by release into sanitary sewage for material regulated by the Nuclear Regulatory Commission and the Missouri Department of Health, respectively, have been met for the period covered by this report.

B. RADIOACTIVE MATERIALS DISCHARGE REPORT CERTIFICATION

I certify under penalty of Law that this document and all attachments were prepared under my direction or supervision in accordance with a system designed to assure that qualified personnel properly gather and evaluate the information submitted. Based on my inquiry of the person or persons who manage the system, or those persons directly responsible for gathering the information, the information submitted is, to the best of my knowledge and belief, true, accurate, and complete. I am aware that there are significant penalties for submitting false information, including the possibility of fine and imprisonment for knowing violations.

RECEIVED
JAN 26 2010
DIVISION OF ENVIRONMENTAL COMPLIANCE

Print/type name of signing official: Richard C. Proehl

Title: Site Director Telephone: 314-654-5816

Signature: Richard C Proehl Date: 01/25/10

radrpt.doc 2/00

PART III: SPECIAL CERTIFICATION STATEMENTS

Based on the special conditions contained in your discharge permit you may be required to certify the following. Please review your permit and **PLACE YOUR INITIALS ON THE LINES NEXT TO THE CERTIFICATIONS.**

A NO CHANGE IN WASTEWATER DISCHARGE AT SAMPLE POINTS WITH NO MONITORING REQUIRED

For permit special conditions that waive monitoring at any sample point(s) specified in your permit, you are required to make the following certification for each report in which monitoring is waived:

RCP I certify, since the last discharge monitoring report, there has been no change in the character of the wastes discharged at sample point(s) _____

B NO CHANGE IN WASTEWATER DISCHARGE AT ACTIVE CONNECTIONS WITHOUT SAMPLE POINTS

For permit special conditions that waive monitoring at active connection points which are not specified as sample points in your permit, you are required to make the following certification:

RCP I certify, since the last discharge monitoring report, there has been no change in the character of wastes discharged at those active connection points which are not specified in my permit.

D GRAB IN LIEU OF COMPOSITE REPRESENTS WASTEWATER DISCHARGE

For permit special conditions that authorize grab sample collection in lieu of composite sampling at any sample point(s), you are required to make the following certification for each report in which such authorized grab samples occur:

_____ I certify the grab sample results in this report accurately represent our average daily discharge at sample point(s) _____.

E NO DISCHARGE OF CATEGORICAL WASTE

For permit special conditions that prohibit discharge of wastes which are subject to certain categorical pretreatment standards, you are required to make the following certification:

RCP I certify, since the last discharge monitoring report, there has been no discharge of wastes which are subject to pretreatment standards in 40 CFR 414 except for Wastewater/Wastes conveyed by SP905.

F CYANIDE NOT USED OR GENERATED IN 40 CFR 439 OPERATIONS

Discharges subject to Pharmaceutical Categorical Standards (40 CFR 439) can be exempted from limitations and monitoring for Total Cyanide at the Pharmaceutical sample point(s) _____ subject to the following certification:

RCP I certify, since the last discharge monitoring report, cyanide has not been used or generated in any pharmaceutical manufacturing process subject to Categorical Standards in 40 CFR 439. * Except for cyanogen bromide used in a pharmaceutical process during this time period.

H PHARMACEUTICAL POLLUTANTS NOT USED OR GENERATED IN 40 CFR 439 OPERATIONS

Discharges subject to Pharmaceutical Categorical Standards (40 CFR 439) can be exempted from monitoring for certain 40 CFR 439-regulated pollutants at the Pharmaceutical sample point(s) _____ subject to the following certification:

_____ I certify, since the last discharge monitoring report, the 40 CFR 439-regulated pollutants, as determined in permittee's report dated _____ have not been used or generated in any pharmaceutical manufacturing process subject to Categorical Standards in 40 CFR 439. In addition, the above-referenced report remains valid.

I SURROGATE MONITORING ALLOWED FOR 40 CFR 439 OPERATIONS

Discharges subject to Pharmaceutical Categorical Standards (40 CFR 439) can be exempted from monitoring for certain 40 CFR 439-regulated pollutants, and replaced by monitoring for surrogate pollutant(s), at the Pharmaceutical sample point(s) _____ subject to the following certification:

_____ I certify, since the last discharge monitoring report, the 40 CFR 439-regulated pollutants, as determined in permittee's report dated _____ continue to receive the same degree of treatment as the surrogate pollutant(s). In addition, the above-referenced report remains valid.

PART IV: GENERAL CERTIFICATION STATEMENTS

B DISCHARGE MONITORING REPORT CERTIFICATION

All permittees must sign and complete the information below:

I certify under penalty of Law that this document and all attachments were prepared under my direction or supervision in accordance with a system designed to assure that qualified personnel properly gather and evaluate the information submitted. Based on my inquiry of the person or persons who manage the system, or those persons directly responsible for gathering the information, the information submitted is, to the best of my knowledge and belief, true, accurate, and complete. I am aware that there are significant penalties for submitting false information, including the possibility of fine and imprisonment for knowing violations.

RECEIVED
JAN 27 2010
DIVISION OF ENVIRONMENTAL COMPLIANCE

Print or type name of signing official: Richard C. Proehl

Title: Site Director Telephone: 314.654.3811

Signature: Richard C Proehl Date: 01/25/10

METROPOLITAN ST. LOUIS SEWER DISTRICT
2009 INDUSTRIAL USER SELF MONITORING REPORT

PLEASE READ THE INSTRUCTIONS BEFORE COMPLETING THIS REPORT

PART I: IDENTIFYING INFORMATION

Company Name: Mallinckrodt Inc.

Permit No.: 2112059600 - 2.1

Premise Address: 3600 North Second St., St. Louis, MO 63147

Monitoring Period: _____(JAN-MAR) ____(APR-JUNE) ____(JULY-SEPT) __X__(OCT-DEC)

Samples Collected By: Mallinckrodt Inc

Analysis Performed By: _____

Part II: ANALYTICAL RESULTS OF SELF MONITORING

MSD SAMPLE POINT REFERENCE NUMBERS	---->		001					
DATES ON WHICH SAMPLES WERE COLLECTED	---->		NA					
TIMES AT WHICH SAMPLES WERE COLLECTED	---->							
PARAMETER	LIMIT	RECORD SAMPLE TYPES (G,C,M OR E) & RESULTS BELOW G=grab,C=composite,M=measured flow,E=estimated flow						UNITS
FLOW		E	1,000					gal/day
NO MONITORING REQUIRED (Sanitary Only)								
There have been no change in the character of the wastes discharged since the last report.								

RECEIVED
JAN 26 2010
DIVISION OF
ENVIRONMENTAL COMPLIANCE

METROPOLITAN ST. LOUIS SEWER DISTRICT
2009 INDUSTRIAL USER SELF MONITORING REPORT

PLEASE READ THE INSTRUCTIONS BEFORE COMPLETING THIS REPORT

PART I: IDENTIFYING INFORMATION

Company Name: Mallinckrodt Inc.

Permit No.: 2112059600 - 2.1

Premise Address: 3600 North Second St., St. Louis, MO 63147

Monitoring Period: _____(JAN-MAR) ____(APR-JUNE) ____(JULY-SEPT) __X__(OCT-DEC)

Samples Collected By: Mallinckrodt Inc

Analysis Performed By:

Part II: ANALYTICAL RESULTS OF SELF MONITORING

MSD SAMPLE POINT REFERENCE NUMBERS	----->		002						
DATES ON WHICH SAMPLES WERE COLLECTED	----->		NA						
TIMES AT WHICH SAMPLES WERE COLLECTED	----->								
PARAMETER	LIMIT	RECORD SAMPLE TYPES (G,C,M OR E) & RESULTS BELOW G=grab,C=composite,M=measured flow,E=estimated flow							UNITS
FLOW		E	2,200						gal/day
NO MONITORING REQUIRED (Sanitary Only)									
There have been no change in the character of the wastes discharged since the last report.									

RECEIVED
JAN 2 6 2010
DIVISION OF
ENVIRONMENTAL COMPLIANCE

METROPOLITAN ST. LOUIS SEWER DISTRICT
2009 INDUSTRIAL USER SELF MONITORING REPORT

PLEASE READ THE INSTRUCTIONS BEFORE COMPLETING THIS REPORT

PART I: IDENTIFYING INFORMATION

Company Name: Mallinckrodt Inc.

Permit No.: 2112059600 - 2.1

Premise Address: 3600 North Second St., St. Louis, MO 63147

Monitoring Period: ____(JAN-MAR) ____(APR-JUNE) ____(JULY-SEPT) __X__(OCT-DEC)

Samples Collected By: Mallinckrodt

Analysis Performed By: TEKLAB

Part II: ANALYTICAL RESULTS OF SELF MONITORING

MSD SAMPLE POINT REFERENCE NUMBERS ---->		003		009		099		
DATES ON WHICH SAMPLES WERE COLLECTED ---->		10/20/2009		10/20/2009		calculated		
TIMES AT WHICH SAMPLES WERE COLLECTED ---->		06:50, 07:50, 08:50, 09:50		07:15, 08:15, 9:15, 10:15		n/a		
PARAMETER	LIMIT	RECORD SAMPLE TYPES (G,C,M OR E) & RESULTS BELOW G=grab,C=composite,M=measured flow,E=estimated flow						UNITS
FLOW		M	21,859	M	21,514	E	345	gal/day
Oil & Grease	200	G	4	G	3	E	66	mg/l
Biochemical Oxygen Demand	****	C	37	C	92	E	0*	mg/l
Chemical Oxygen Demand	****	C	124	C	234	E	0*	mg/l
Total Suspended Solids	****	C	42	C	63	E	0*	mg/l
Temperature	60	G	21	G	20	E	20	deg C
pH	5.5 - 11.5	G	7.2	G	7.6	E	7.4	S.U.
* Reported as 0 because the calculated value resulted in a negative number.								
Lab Dilution Factor			1		1			

RECEIVED
JAN 2 6 2010
DIVISION OF
ENVIRONMENTAL COMPLIANCE

METROPOLITAN ST. LOUIS SEWER DISTRICT
2009 INDUSTRIAL USER SELF MONITORING REPORT

PLEASE READ THE INSTRUCTIONS BEFORE COMPLETING THIS REPORT

PART I: IDENTIFYING INFORMATION

Company Name: Mallinckrodt Inc.

Permit No.: 2112059600 - 2.1

Premise Address: 3600 North Second St., St. Louis, MO 63147

Monitoring Period: _____(JAN-MAR) ____(APR-JUNE) ____(JULY-SEPT) __X_(OCT-DEC)

Samples Collected By: Mallinckrodt

Analysis Performed By: TEKLAB

Part II: ANALYTICAL RESULTS OF SELF MONITORING

MSD SAMPLE POINT REFERENCE NUMBERS	----->		005					
DATES ON WHICH SAMPLES WERE COLLECTED	----->		10/20/2009					
TIMES AT WHICH SAMPLES WERE COLLECTED	----->		07:00, 8:00, 09:00, 10:00					
PARAMETER	LIMIT	RECORD SAMPLE TYPES (G,C,M OR E) & RESULTS BELOW G=grab,C=composite,M=measured flow,E=estimated flow						UNITS
FLOW		E	32,000					gal/day
Oil & Grease	200	G	<5					mg/l
Biochemical Oxygen Demand	****	C	80					mg/l
Chemical Oxygen Demand	****	C	133					mg/l
Total Suspended Solids	****	C	7					mg/l
Temperature	60	G	21					deg C
pH	5.5 - 11.5	G	9.1					S.U.
Lab Dilution Factor			1					

RECEIVED
JAN 2 1 2010
DIVISION OF
ENVIRONMENTAL COMPLIANCE

METROPOLITAN ST. LOUIS SEWER DISTRICT
2009 INDUSTRIAL USER SELF MONITORING REPORT

PLEASE READ THE INSTRUCTIONS BEFORE COMPLETING THIS REPORT

PART I: IDENTIFYING INFORMATION

Company Name: Mallinckrodt Inc.

Permit No.: 2112059600 - 2.1

Premise Address: 3600 North Second St., St. Louis, MO 63147

Monitoring Period: ____(JAN-MAR) ____(APR-JUNE) ____(JULY-SEPT) _X___(OCT-DEC)

Samples Collected By: Mallinckrodt

Analysis Performed By: TEKLAB

Part II: ANALYTICAL RESULTS OF SELF MONITORING

MSD SAMPLE POINT REFERENCE NUMBERS	---->		008						
DATES ON WHICH SAMPLES WERE COLLECTED	---->								
TIMES AT WHICH SAMPLES WERE COLLECTED	---->								
PARAMETER	LIMIT	RECORD SAMPLE TYPES (G,C,M OR E) & RESULTS BELOW G=grab,C=composite,M=measured flow,E=estimated flow							UNITS
FLOW		E	*						gal/day
Oil & Grease	200	G	*						mg/l
Biochemical Oxygen Demand	****	G	*						mg/l
Chemical Oxygen Demand	****	G	*						mg/l
Temperature	60	G	*						deg C
Total Suspended Solids	****	G	*						mg/L
pH	5.5 - 11.5	G	*						S.U.
* No flow from this outfall during this reporting period.									
Lab Dilution Factor									

RECEIVED

JAN 26 2010

DIVISION OF
ENVIRONMENTAL COMPLIANCE

METROPOLITAN ST. LOUIS SEWER DISTRICT
2009 INDUSTRIAL USER SELF MONITORING REPORT

PLEASE READ THE INSTRUCTIONS BEFORE COMPLETING THIS REPORT

PART I: IDENTIFYING INFORMATION

Company Name: Mallinckrodt Inc.

Permit No.: 2112059600 -2.1

Premise Address: 3600 North Second St., St. Louis, MO 63147

Monitoring Period: _____(JAN-MAR) ____(APR-JUNE) ____(JULY-SEPT) __X___(OCT-DEC)

Samples Collected By: Mallinckrodt

Analysis Performed By: TEKLAB

Part II: ANALYTICAL RESULTS OF SELF MONITORING

MSD SAMPLE POINT REFERENCE NUMBERS	---->		010						
DATES ON WHICH SAMPLES WERE COLLECTED	---->		10/20/2009						
TIMES AT WHICH SAMPLES WERE COLLECTED	---->		07:30, 08:30, 9:30, 10:30						
PARAMETER	LIMIT	RECORD SAMPLE TYPES (G,C,M OR E) & RESULTS BELOW G=grab,C=composite,M=measured flow,E=estimated flow							UNITS
FLOW		E	1,860,482						gal/day
Oil & Grease	200	G	<5						mg/l
Biochemical Oxygen Demand	****	C	707						mg/l
Chemical Oxygen Demand	****	C	1330						mg/l
Total Suspended Solids	****	C	75						mg/l
Temperature	60	G	32						deg C
pH	5.5 - 11.5	G	see attached						S.U.
Chromium	5	C	0.007						mg/l
Copper	2.7	C	0.016						mg/l
Nickel	2.3	C	0.014						mg/l
Zinc	3	C	0.024						mg/l
Lab Dilution Factor			1						

RECEIVED

JAN 26 2010

DIVISION OF
ENVIRONMENTAL COMPLIANCE

Mallinckrodt pH Monitoring for SP010: October, 2009

Date / Time	pH	Total for Event in Minutes
09-Oct-09 13:35:00	4.6	5
22-Oct-09 08:55:00	4.0	5
30-Oct-09 13:40:00	4.8	5
	October Total	**15**

Mallinckrodt pH Monitoring for SP010: November, 2009

Date / Time	pH	Total for Event in Minutes
05-Nov-09 15:10:00	5.3	5
13-Nov-09 08:35:00	4.8	5
13-Nov-09 09:30:00	3.9	5
13-Nov-09 09:35:00	4.0	
13-Nov-09 09:40:00	4.0	10
25-Nov-09 13:00:00	5.0	5
	November Total:	**30**

Mallinckrodt pH Monitoring for SP010: December, 2009

Date / Time	pH	Total for Event in Minutes
01-Dec-09 00:50:00	11.5	5
04-Dec-09 10:10:00	5.2	5
04-Dec-09 10:15:00	4.5	5
04-Dec-09 10:40:00	4.0	5
05-Dec-09 15:10:00	11.6	5
22-Dec-09 04:45:00	11.7	
22-Dec-09 04:50:00	12.0	
22-Dec-09 04:55:00	11.8	15
30-Dec-09 16:00:00	3.5	5
	December Total:	**45**

RECEIVED

JAN 2 h 2010

DIVISION OF
ENVIRONMENTAL COMPLIANCE

METROPOLITAN ST. LOUIS SEWER DISTRICT
2009 INDUSTRIAL USER SELF MONITORING REPORT

PLEASE READ THE INSTRUCTIONS BEFORE COMPLETING THIS REPORT

PART I: IDENTIFYING INFORMATION

Company Name: Mallinckrodt Inc.

Permit No.: 2112059600 - 2.1

Premise Address: 3600 North Second St., St. Louis, MO 63147

Monitoring Period: ____(JAN-MAR) ____(APR-JUNE) ____(JULY-SEPT) __X__(OCT-DEC)

Samples Collected By: Mallinckrodt

Analysis Performed By: TEKLAB

Part II: ANALYTICAL RESULTS OF SELF MONITORING

MSD SAMPLE POINT REFERENCE NUMBERS	---->		011		011			
DATES ON WHICH SAMPLES WERE COLLECTED	---->		10/21/2009		12/17/2009			
TIMES AT WHICH SAMPLES WERE COLLECTED	---->		7:48		4:55			
PARAMETER	LIMIT	RECORD SAMPLE TYPES (G,C,M OR E) & RESULTS BELOW G=grab,C=composite,M=measured flow,E=estimated flow						UNITS
FLOW		E	14,000	E	14,000			gal/day
Oil & Grease	200	G	<6	G	4			mg/l
Biochemical Oxygen Demand	****	G	26	G	480			mg/l
Chemical Oxygen Demand	****	G	58	G	695			mg/l
Total Suspended Solids	****	G	34	G	14			mg/l
Temperature	60	G	19.0	G	7.2			deg C
pH	5.5 - 11.5	G	9.1	G	5.03*			S.U.
*See cover letter for details of this event.								
Lab Dilution Factor			1		1			

RECEIVED
JAN 26 2010
DIVISION OF
ENVIRONMENTAL COMPLIANCE

METROPOLITAN ST. LOUIS SEWER DISTRICT
2009 INDUSTRIAL USER SELF MONITORING REPORT

PLEASE READ THE INSTRUCTIONS BEFORE COMPLETING THIS REPORT

PART I: IDENTIFYING INFORMATION

Company Name: Mallinckrodt Inc.

Permit No.: 2112059600 - 2.1

Premise Address: 3600 North Second St., St. Louis, MO 63147

Monitoring Period: ____(JAN-MAR) _____(APR-JUNE) ____(JULY-SEPT) __X__(OCT-DEC)

Samples Collected By: Mallinckrodt

Analysis Performed By: TEKLAB

Part II: ANALYTICAL RESULTS OF SELF MONITORING

MSD SAMPLE POINT REFERENCE NUMBERS	----->		011					
DATES ON WHICH SAMPLES WERE COLLECTED	----->		10/21/2009					
TIMES AT WHICH SAMPLES WERE COLLECTED	----->		7:48					
PARAMETER	LIMIT	RECORD SAMPLE TYPES (G,C,M OR E) & RESULTS BELOW G=grab,C=composite,M=measured flow,E=estimated flow						UNITS
FLOW		E	14,000					gal/day
1,1,1-Trichloroethane		G	<0.005					mg/l
1,1,2,2-Tetrachloroethane		G	<0.005					mg/l
1,1,2-Trichloroethane		G	<0.005					mg/l
1,1-Dichloroethane		G	<0.005					mg/l
1,1-Dichloroethene		G	<0.005					mg/l
1,2-Dichlorobenzene		G	<0.005					mg/l
1,2-Dichloroethane		G	<0.005					mg/l
1,2-Dichloropropane		G	<0.005					mg/l
1,3-Dichlorobenzene		G	<0.005					mg/l
1,4-Dichlorobenzene		G	<0.005					mg/l
2-Chloroethylvinylether		G	<0.020					mg/l
Acrolein		G	<0.100					mg/l
Acrylonitrile		G	<0.005					mg/l
Benzene		G	<0.002					mg/l
Bromodichloromethane		G	<0.005					mg/l
Bromoform		G	<0.005					mg/l
Bromomethane		G	<0.010					mg/l
Carbon Tetrachloride		G	<0.005					mg/l
Chlorobenzene		G	<0.005					mg/l
Chloroethane		G	<0.010					mg/l
Chloroform		G	0.0072					mg/l
Chloromethane		G	<0.010					mg/l
cis-1,3-Dicholropropene		G	<0.005					mg/l
Dibromochloromethane		G	<0.005					mg/l
Ethylbenzene		G	<0.005					mg/l
Methylene Chloride		G	<0.005					mg/l
Tetrachloroethene		G	<0.005					mg/l
Toluene		G	0.0019					mg/l
trans-1,2-Dichloroethene		G	<0.005					mg/l
trans-1,3-Dichloropropene		G	<0.005					mg/l
Trichloroethene		G	<0.005					mg/l
Vinyl Chloride		G	<0.002					mg/l
1,2,4-Trichlorobenzene		G	<0.008					mg/l
2,4,6-Trichlorophenol		G	<0.008					mg/l
2,4-Dichlorophenol		G	<0.008					mg/l
2,4-Dimethylphenol		G	<0.008					mg/l
2,4-Dinitrophenol		G	<0.017					mg/l
2,4-Dinitrotoluene		G	<0.008					mg/l
2,6-Dinitrotoluene		G	<0.008					mg/l
2-Chloronapthalene		G	<0.008					mg/l
2-Chlorophenol		G	<0.008					mg/l
2-Nitrophenol		G	<0.017					mg/l
3,3-Dichlorobenzidine		G	<0.008					mg/l
2-Methyl-4,6-dinitrophenol		G	<0.017					mg/l
4-Bromophenyl-phenylether		G	<0.008					mg/l
4-Chloro-3-methylphenol		G	<0.017					mg/l
4-Chlorophenyl-phenylether		G	<0.008					mg/l
4-Nitrophenol		G	<0.017					mg/l
Acenapthene		G	<0.008					mg/l
Acenaphthylene		G	<0.008					mg/l
Anthracene		G	<0.008					mg/l
Benzidine		G	<0.034					mg/l

RECEIVED
JAN 26 2010
DIVISION OF
ENVIRONMENTAL COMPLIANCE

METROPOLITAN ST. LOUIS SEWER DISTRICT
2009 INDUSTRIAL USER SELF MONITORING REPORT

PLEASE READ THE INSTRUCTIONS BEFORE COMPLETING THIS REPORT

PART I: IDENTIFYING INFORMATION

Company Name: Mallinckrodt Inc.

Permit No.: 2112059600 - 2.1

Premise Address: 3600 North Second St., St. Louis, MO 63147

Monitoring Period: ____(JAN-MAR) _____(APR-JUNE) ____(JULY-SEPT) __X__(OCT-DEC)

Samples Collected By: Mallinckrodt

Analysis Performed By: TEKLAB

Part II: ANALYTICAL RESULTS OF SELF MONITORING

MSD SAMPLE POINT REFERENCE NUMBERS	----->		011					
DATES ON WHICH SAMPLES WERE COLLECTED	----->		10/21/2009					
TIMES AT WHICH SAMPLES WERE COLLECTED	----->		7:48					
PARAMETER	LIMIT	RECORD SAMPLE TYPES (G,C,M OR E) & RESULTS BELOW G=grab,C=composite,M=measured flow,E=estimated flow						UNITS
FLOW		E	14,000					gal/day
Benzo(a)anthracene		G	<0.008					mg/l
Benzo(a)pyrene		G	<0.008					mg/l
Benzo(b)fluoranthene		G	<0.008					mg/l
Benzo(g,h,i)perylene		G	<0.008					mg/l
Benzo(k)fluoranthene		G	<0.008					mg/l
Bis(2-chloroethoxy)methane		G	<0.008					mg/l
Bis(2-chloroethyl)ether		G	<0.008					mg/l
Bis(2-chloroisopropyl)ether		G	<0.008					mg/l
Bis(2-ethylhexyl)phthalate		G	<0.005					mg/l
Butyl benzyl phthalate		G	<0.008					mg/l
Chrysene		G	<0.008					mg/l
Dibenzo(a,h)anthracene		G	<0.008					mg/l
Diethyl phthalate		G	<0.008					mg/l
Dimethyl phthalate		G	<0.008					mg/l
Di-n-butyl phthalate		G	<0.008					mg/l
Di-n-octyl-phthalate		G	<0.008					mg/l
Fluoranthene		G	<0.008					mg/l
Fluorene		G	<0.008					mg/l
Hexachlorobenzene		G	<0.008					mg/l
Hexachlorobutadiene		G	<0.008					mg/l
Hexachlorocyclopentadiene		G	<0.017					mg/l
Hexachloroethane		G	<0.008					mg/l
Ideno(1,2,3-cd)pyrene		G	<0.008					mg/l
Isophorone		G	<0.008					mg/l
Naphthalene		G	<0.008					mg/l
Nitrobenzene		G	<0.008					mg/l
N-nitrosodimethylamine		G	<0.017					mg/l
N-nitrosodi-n-propylamine		G	<0.008					mg/l
N-nitrosodiphenylamine		G	<0.008					mg/l
Pentachlorophenol		G	<0.017					mg/l
Phenanthrene		G	<0.008					mg/l
Phenol		G	<0.004					mg/l
Pyrene		G	<0.008					mg/l
1,2-Diphenylhydrazine		G	<0.008					mg/l
Total Toxic Organics	5.52	--	0.817					mg/l
Lab Dilution Factor			1					

RECEIVED

JAN 2 6 2010

DIVISION OF
ENVIRONMENTAL COMPLIANCE

Mallinckrodt pH Monitoring Data for SP011: Maintenance Work Overflow October 21, 2009		
Date	**Time**	**pH**
21-Oct-09	7:48:00	9.1
21-Oct-09	8:15:00	8.9
21-Oct-09	8:45:00	8.9
21-Oct-09	9:15:00	8.7

Mallinckrodt pH Monitoring Data for SP011: Unplanned Power Outage Overflow December 17, 2009		
Date	**Time**	**pH**
17-Dec-09	4:55:00	5.0
17-Dec-09	5:25:00	6.0

RECEIVED
JAN 2 h 2010
DIVISION OF
ENVIRONMENTAL COMPLIANCE

METROPOLITAN ST. LOUIS SEWER DISTRICT
2009 INDUSTRIAL USER SELF MONITORING REPORT

PLEASE READ THE INSTRUCTIONS BEFORE COMPLETING THIS REPORT

PART I: IDENTIFYING INFORMATION

Company Name: Mallinckrodt Inc.
Permit No.: 2112059600 - 2.1
Premise Address: 3600 North Second St., St. Louis, MO 63147
Monitoring Period: _____(JAN-MAR) ____(APR-JUN) ____(JULY-SEP) __X___(OCT-DEC)
Samples Collected By: Mallinckrodt Inc
Analysis Performed By: TEKLAB

Part II: ANALYTICAL RESULTS OF SELF MONITORING

MSD SAMPLE POINT REFERENCE NUMBERS					**080**				
DATES ON WHICH SAMPLES WERE COLLECTED					12/8/2009				
TIMES AT WHICH SAMPLES WERE COLLECTED					1015,1115, 1215, 1315				
PARAMETER	EPA METHOD	DAILY MAX	AVG MONTHLY	**RECORD SAMPLE TYPES (G, C, M OR E) & RESULTS BELOW** G=Grab, C-composite, M=measured flow, E=estimated flow					UNITS
FLOW				E	3,500				gal/day
Acetone	524.2	20.70	8.20	G	<1.000				mg/L
n-Amyl Acetate	1666	20.70	8.20	G	<0.100				mg/L
Benzene	524.2	3.00	0.70	G	<0.100				mg/L
n-Butyl acetate	1666	20.70	8.20	G	<0.100				mg/L
Chlorobenzene	524.2	3.00	0.70	G	<0.100				mg/L
Chloroform	524.2	0.10	0.03	G	<0.020				mg/L
1,2-Dichlorobenzene	524.2	20.70	8.20	G	<0.100				mg/L
1,2-Dichloroethane	524.2	20.70	8.20	G	<0.100				mg/L
Diethyl amine	1671	255.00	100.00	G	<50				mg/L
Ethyl Acetate	1666	20.70	8.20	G	<0.200				mg/L
n-Heptane	1666	3.00	0.70	G	<0.200				mg/L
n-Hexane	1666	3.00	0.70	G	<0.200				mg/L
Isobutyraldehyde	1666	20.70	8.20	G	<0.200				mg/L
Isopropyl acetate	1666	20.70	8.20	G	<0.100				mg/L
Isopropyl ether	1666	20.70	8.20	G	<0.100				mg/L
Methylene chloride	524.2	3.00	0.70	G	0.026				mg/L
Methyl formate	1666	20.70	8.20	G	<1.000				mg/L
4-Methyl-2-pentanone	1666	20.70	8.20	G	<0.200				mg/L
Tetrahydrofuran	1666	9.20	3.40	G	<0.400				mg/L
Toluene	524.2	0.30	0.20	G	<0.100				mg/L
Triethyl amine	1671	255.00	100.00	G	<20				mg/L
Xylenes	1666	3.00	0.70	G	<0.100				mg/L
Oil & Grease	1664	200		G	<6				mg/L
Biochemical Oxygen Demand		****		C	<5				mg/L
Chemical Oxygen Demand		****		C	32				mg/L
Total Suspended Solids		****		C	68				mg/L
Temperature		60		G	10				deg C
pH		5.5 - 11.5		G	9.7				S.U.
Dilution by lab					1, 20				

RECEIVED
JAN 2 1 2010
DIVISION OF
ENVIRONMENTAL COMPLIANCE

Sample Point 080 Building 98

Process/ Product	Pharmaceutical OCPSF Non-Regulated	Date Start	Date End	Wastewater Disposition	Wastewater Sample Date	OCPSF-Cyanide, Zinc, Lead	Pharmaceutical-Cyanide
Peptides							
Boc-Leuprolide (8050)	Pharmaceutical	10-13-09 12-02-09 12-07-09 12-14-09	10-13-09 12-02-09 12-08-09 12-15-09	Drum		n/a	No
		12-08-09	12-09-09	MSD	12-08-09	n/a	No
Exenatide (7310)	Pharmaceutical	10-01-09 10-07-09 10-12-09 10-19-09 10-22-09	10-03-09 10-10-09 10-15-09 10-20-09 10-22-09	Drum		n/a	No
Oxycodone Terepthalate (6464)	Pharmaceutical	11-02-09 11-21-09 11-30-09 12-01-09	11-06-09 11-25-09 11-30-09 12-01-09	Drum		n/a	No

RECEIVED
JAN 2 h 2010
DIVISION OF
ENVIRONMENTAL COMPLIANCE

METROPOLITAN ST. LOUIS SEWER DISTRICT
2009 INDUSTRIAL USER SELF MONITORING REPORT

PLEASE READ THE INSTRUCTIONS BEFORE COMPLETING THIS REPORT

PART I: IDENTIFYING INFORMATION

Company Name: Mallinckrodt Inc.

Permit No.: 2112059600 - 2.1

Premise Address: 3600 North Second St., St. Louis, MO 63147

Monitoring Period: ____(JAN-MAR) _____ (APR-JUNE) _____(JULY-SEPT) __X__(OCT-DEC)

Samples Collected By: Mallinckrodt

Analysis Performed By: TEKLAB

Part II: ANALYTICAL RESULTS OF SELF MONITORING

MSD SAMPLE POINT REFERENCE NUMBERS		------>		905				
DATES ON WHICH SAMPLES WERE COLLECTED		------>		12/17/2009				
TIMES AT WHICH SAMPLES WERE COLLECTED		------>		11:00				
	LIMIT (ave)	LIMIT	RECORD SAMPLE TYPES (G,C,M OR E) & RESULTS BELOW G=grab,C=composite,M=measured flow,E=estimated flow					
PARAMETER	(gm/day)	(gm/day)			Lab results mg/L			UNITS
FLOW			M	55,111				gal/day
1,2,4-Trichlorobenzene	137.24	555.98	G	2.09	0.010			gm/day
1,2-Dichlorobenzene	137.24	555.98	G	1.04	0.005			gm/day
1,3-Dichlorobenzene	99.43	266.09	G	1.04	0.005			gm/day
1,4-Dichlorobenzene	99.43	266.09	G	1.04	0.005			gm/day
2-Nitrophenol	45.51	161.75	G	4.17	0.020			gm/day
2-Methyl-4,6-dinitrophenol	54.62	193.96	G	4.17	0.020			gm/day
4-Nitrophenol	113.44	403.33	G	4.17	0.020			gm/day
Acenapthene	13.3	32.91	G	2.09	0.010			gm/day
Anthracene	13.3	32.91	G	2.09	0.010			gm/day
Bis(2-ethylhexyl)phthalate	66.52	180.66	G	12.52	0.060			gm/day
Diethyl phthalate	32.21	79.13	G	2.09	0.010			gm/day
Dimethyl phthalate	13.3	32.91	G	2.09	0.010			gm/day
Di-n-butyl phthalate	14	30.11	G	2.09	0.010			gm/day
Fluoranthene	15.4	37.81	G	2.09	0.010			gm/day
Fluorene	13.3	32.91	G	2.09	0.010			gm/day
Hexachlorobenzene	137.24	555.98	G	2.09	0.010			gm/day
Hexachlorobutadiene	99.43	266.09	G	2.09	0.010			gm/day
Hexachloroethane	137.24	555.98	G	2.09	0.010			gm/day
Naphthalene	13.3	32.91	G	2.09	0.010			gm/day
Phenanthrene	13.3	32.91	G	2.09	0.010			gm/day
Pyrene	14	33.61	G	2.09	0.010			gm/day
1,1,1-Trichloroethane	15.4	41.31	G	1.04	0.005			gm/day
1,1,2-Trichloroethane	22.4	88.93	G	1.04	0.005			gm/day
1,1-Dichloroethane	15.4	41.31	G	1.04	0.005			gm/day
1,1-Dichloroethene	15.4	41.31	G	1.04	0.005			gm/day
1,2-Dichloroethane	126.04	401.93	G	1.04	0.005			gm/day
1,2-Dichloropropane	137.24	555.98	G	1.04	0.005			gm/day
Benzene	39.91	93.83	G	0.42	0.002			gm/day
Carbon Tetrachloride	99.43	266.09	G	1.04	0.005			gm/day
Chlorobenzene	99.43	266.09	G	1.04	0.005			gm/day
Chloroethane	77.02	206.57	G	2.09	0.010			gm/day
Chloroform	77.72	277.57	G	1.04	0.005			gm/day
Chloromethane	77.02	277.57	G	2.09	0.010			gm/day
cis-1,3-Dichloropropene	137.24	555.98	G	1.04	0.005			gm/day
Ethylbenzene	99.43	266.09	G	1.04	0.005			gm/day
Methylene Chloride	77.02	119.04	G	1.04	0.005			gm/day
Nitrobenzene	1566.4	4482.84	G	2.09	0.010			gm/day
Tetrachloroethene	36.41	114.84	G	1.04	0.005			gm/day
Toluene	19.61	51.82	G	1.04	0.005			gm/day
trans-1,2-Dichloroethene	17.51	46.21	G	1.04	0.005			gm/day
trans-1,3-Dichloropropene	137.24	555.98	G	1.04	0.005			gm/day
Trichloroethene	18.21	48.32	G	1.04	0.005			gm/day
Vinyl Chloride	67.92	120.44	G	0.42	0.002			gm/day
Lab Dilution Factor				1, 10				

RECEIVED
JAN 26 2010
DIVISION OF
ENVIRONMENTAL COMPLIANCE

METROPOLITAN ST. LOUIS SEWER DISTRICT
2009 INDUSTRIAL USER SELF MONITORING REPORT

PLEASE READ THE INSTRUCTIONS BEFORE COMPLETING THIS REPORT

PART I: IDENTIFYING INFORMATION

Company Name: Mallinckrodt Inc.

Permit No.: 2112059600 - 2.1

Premise Address: 3600 North Second St., St. Louis, MO 63147

Monitoring Period: _____(JAN-MAR) ____(APR-JUNE) ____(JULY-SEPT) __X__(OCT-DEC)

Samples Collected By: Mallinckrodt Inc

Analysis Performed By: TEKLAB

Part II: ANALYTICAL RESULTS OF SELF MONITORING

MSD SAMPLE POINT REFERENCE NUMBERS	----->		912						
DATES ON WHICH SAMPLES WERE COLLECTED	----->		See attached						
TIMES AT WHICH SAMPLES WERE COLLECTED	----->								
PARAMETER	LIMIT	RECORD SAMPLE TYPES (G,C,M OR E) & RESULTS BELOW G=grab,C=composite,M=measured flow,E=estimated flow							UNITS
FLOW		M	See attached						gal/day
DMAC (daily max)	7091	C	See attached						lb/day
DMAC (monthly average)	5459	C	See attached						lb/day
	*								
* Monitoring requirement only.									
Lab Dilution Factor			1						

RECEIVED
JAN 2 h 2010
DIVISION OF
ENVIRONMENTAL COMPLIANCE

DMAC Analysis and Mass Loadings - SP912				
4th Quarter 2009				Analysis by TEKLAB unless otherwise noted.
Date	Flow	DMAC		
	GPD	mg/l	lb/day	
October -09				
10/5/2009	199,620	1100	1865	
10/12/2009	177,861	1700	2568	
10/19/2009	199,918	1300	2207	
10/26/2009	175,421	1200	1788	
October Ave:			**2,107**	**lb/day**
Daily Max:			**2,568**	**lb/day**
November -09				
11/2/2009	5,833	1100	54	
11/9/2009	220,939	1500	2515	
11/16/2009	196,610	1100	1724	
11/23/2009	177,977	1400	2116	
11/30/2009	211,992	940	1692	
November Ave:			**1,620**	**lb/day**
Daily Max:			**2,515**	**lb/day**
December - 09				
12/7/2009	232,355	1400	2315	
12/14/2009	80,613	1300	2440	
12/21/2009	84,721	940	676	
12/28/2009	60,674	900	528	
December Ave:			**1,490**	**lb/day**
Daily Max:			**2,440**	**lb/day**

RECEIVED
JAN 2 h 2010
DIVISION OF
ENVIRONMENTAL COMPLIANCE

METROPOLITAN ST. LOUIS SEWER DISTRICT
2009 INDUSTRIAL USER SELF MONITORING REPORT

PART I: IDENTIFYING INFORMATION

Company Name: **MALLINCKRODT INC.**
Permit No.: 2112059600 - 2.1 Effective Date: 07-01-2008 Expiration Date: 05-31-2010
Premise Address: 3600 North Second St., St. Louis, MO 63147
Monitoring Period: ____(JAN-MAR) ____(APR-JUN) ____(JULY-SEP) __X__(OCT-DEC)
Samples Collected By: Mallinckrodt Inc
Analysis Performed By: TEKLAB

Part II: ANALYTICAL RESULTS OF SELF MONITORING

MSD SAMPLE POINT REFERENCE NUMBERS ---->					915				
DATES ON WHICH SAMPLES WERE COLLECTED ---->					10/29/2009				
TIMES AT WHICH SAMPLES WERE COLLECTED ---->					09:25				
PARAMETER	EPA METHOD	DAILY MAX	AVG MONTHLY	RECORD SAMPLE TYPES (G, C, M OR E) & RESULTS BELOW G=Grab, C-composite, M=measured flow, E=estimated flow					UNITS
FLOW				E	20,000				gal/day
Acetone	524.2	20.70	8.20	G	1.510				mg/L
n-Amyl acetate	1666	20.70	8.20	G	<0.100				mg/L
Benzene	524.2	3.00	0.70	G	<0.100				mg/L
n-Butyl acetate	1666	20.70	8.20	G	<0.100				mg/L
Chlorobenzene	524.2	3.00	0.70	G	<0.100				mg/L
Chloroform	524.2	0.10	0.03	G	<0.020				mg/L
1,2-Dichlorobenzene	524.2	20.70	8.20	G	<0.100				mg/L
1,2-Dichloroethane	524.2	20.70	8.20	G	<0.100				mg/L
Diethyl amine	1671	255.00	100.00	G	*				mg/L
Ethyl Acetate	1666	20.70	8.20	G	<0.200				mg/L
n-Heptane	1666	3.00	0.70	G	<0.200				mg/L
n-Hexane	1666	3.00	0.70	G	<0.200				mg/L
Isobutyraldehyde	1666	20.70	8.20	G	0.066				mg/L
Isopropyl acetate	1666	20.70	8.20	G	<0.100				mg/L
Isopropyl ether	1666	20.70	8.20	G	<0.100				mg/L
Methylene chloride	524.2	3.00	0.70	G	<0.100				mg/L
Methyl formate	1666	20.70	8.20	G	<1				mg/L
4-Methyl-2-pentanone	1666	20.70	8.20	G	<0.200				mg/L
Tetrahydrofuran	1666	9.20	3.40	G	<0.400				mg/L
Toluene	524.2	0.30	0.20	G	<0.100				mg/L
Triethyl amine	1671	255.00	100.00	G	*				mg/L
Xylenes	1666	3.00	0.70	G	<0.100				mg/L
** Annual sampling requirement for this parameter.*									
Dilution by lab					20				

RECEIVED
JAN 2 1 2010
DIVISION OF
ENVIRONMENTAL COMPLIANCE

METROPOLITAN ST. LOUIS SEWER DISTRICT
2009 INDUSTRIAL USER SELF MONITORING REPORT

PART I: IDENTIFYING INFORMATION

Company Name: **MALLINCKRODT INC.**
Permit No.: 2112059600 - 2.1 Effective Date: 07-01-2008 Expiration Date: 05-31-2010
Premise Address: 3600 North Second St., St. Louis, MO 63147
Monitoring Period: ____(JAN-MAR) ____(APR-JUN) ____(JULY-SEP) __X__(OCT-DEC)
Samples Collected By: Mallinckrodt Inc
Analysis Performed By: TEKLAB

Part II: ANALYTICAL RESULTS OF SELF MONITORING

MSD SAMPLE POINT REFERENCE NUMBERS					**918**				
DATES ON WHICH SAMPLES WERE COLLECTED									
TIMES AT WHICH SAMPLES WERE COLLECTED									
PARAMETER	EPA METHOD	DAILY MAX	AVG MONTHLY	**RECORD SAMPLE TYPES (G, C, M OR E) & RESULTS BELOW G=Grab, C-composite, M=measured flow, E=estimated flow**					UNITS
FLOW				E	*				gal/day
Acetone	524.2	20.70	8.20	G					mg/L
Ethyl Acetate	1666	20.70	8.20	G					mg/L
Isopropyl acetate	1666	20.70	8.20	G					mg/L
Methylene chloride	524.2	3.00	0.70	G					mg/L
n-Amyl acetate	1666	20.70	8.20	G					mg/L
**** No flow this quarter***									
Dilution by lab									

RECEIVED
JAN 2 h 2010
DIVISION OF
ENVIRONMENTAL COMPLIANCE

METROPOLITAN ST. LOUIS SEWER DISTRICT
2009 INDUSTRIAL USER SELF MONITORING REPORT

PART I: IDENTIFYING INFORMATION

Company Name: **MALLINCKRODT INC.**
Permit No.: 2112059600 - 2.1 Effective Date: 07-01-2008 Expiration Date: 05-31-2010
Premise Address: 3600 North Second St., St. Louis, MO 63147
Monitoring Period: ____(JAN-MAR) ____(APR-JUN) ____(JULY-SEP) __X__(OCT-DEC)
Samples Collected By: Mallinckrodt Inc
Analysis Performed By: TEKLAB

Part II: ANALYTICAL RESULTS OF SELF MONITORING

MSD SAMPLE POINT REFERENCE NUMBERS					920							
DATES ON WHICH SAMPLES WERE COLLECTED					10/6/2009							
TIMES AT WHICH SAMPLES WERE COLLECTED					13:40							
PARAMETER	EPA METHOD	DAILY MAX	AVG MONTHLY	RECORD SAMPLE TYPES (G, C, M OR E) & RESULTS BELOW G=Grab, C-composite, M=measured flow, E=estimated flow								UNITS
FLOW				E	22,000	E						gal/day
Tetrahydrofuran	1666	9.20	3.40	G	<0.400	G						mg/L
Toluene	524.2	0.30	0.20	G	0.015	G						mg/L
Dilution by lab					20							

RECEIVED
JAN 2 6 2010
DIVISION OF
ENVIRONMENTAL COMPLIANCE

METROPOLITAN ST. LOUIS SEWER DISTRICT
2009 INDUSTRIAL USER SELF MONITORING REPORT

PART I: IDENTIFYING INFORMATION

Company Name: **MALLINCKRODT INC.**
Permit No.: 2112059600 - 2.1 Effective Date: 07-01-2008 Expiration Date: 05-31-2010
Premise Address: 3600 North Second St., St. Louis, MO 63147
Monitoring Period: ____(JAN-MAR) ____(APR-JUN) ____(JULY-SEP) __X__(OCT-DEC)
Samples Collected By: Mallinckrodt Inc
Analysis Performed By: TEKLAB

Part II: ANALYTICAL RESULTS OF SELF MONITORING

MSD SAMPLE POINT REFERENCE NUMBERS			---->		927							
DATES ON WHICH SAMPLES WERE COLLECTED			---->		11/3/2009							
TIMES AT WHICH SAMPLES WERE COLLECTED			---->		10:30							
PARAMETER	EPA METHOD	DAILY MAX	AVG MONTHLY	RECORD SAMPLE TYPES (G, C, M OR E) & RESULTS BELOW G=Grab, C-composite, M=measured flow, E=estimated flow								UNITS
FLOW				E	2,200							gal/day
Acetone	524.2	20.70	8.20	G	<1							mg/L
n-Amyl acetate	1666	20.70	8.20	G	<0.100							mg/L
Ethyl Acetate	1666	20.70	8.20	G	<0.200							mg/L
Isopropyl acetate	1666	20.70	8.20	G	<0.100							mg/L
Methylene chloride	524.2	3.00	0.70	G	<0.100							mg/L
Dilution by lab					20							

RECEIVED
JAN 2 h 2010
DIVISION OF
ENVIRONMENTAL COMPLIANCE

METROPOLITAN ST. LOUIS SEWER DISTRICT
2009 INDUSTRIAL USER SELF MONITORING REPORT

PLEASE READ THE INSTRUCTIONS BEFORE COMPLETING THIS REPORT

PART I: IDENTIFYING INFORMATION

Company Name: Mallinckrodt Inc.
Permit No.: 2112059600 - 2.1
Premise Address: 3600 North Second St., St. Louis, MO 63147
Monitoring Period: ____(JAN-MAR) ____(APR-JUN) ____(JULY-SEP) __X__(OCT-DEC)
Samples Collected By: Mallinckrodt Inc
Analysis Performed By: TekLab

Part II: ANALYTICAL RESULTS OF SELF MONITORING

MSD SAMPLE POINT REFERENCE NUMBERS					930							
DATES ON WHICH SAMPLES WERE COLLECTED												
TIMES AT WHICH SAMPLES WERE COLLECTED												
PARAMETER	EPA METHOD	DAILY MAX	AVG MONTHLY	**RECORD SAMPLE TYPES (G, C, M OR E) & RESULTS BELOW** G=Grab, C-composite, M=measured flow, E=estimated flow								UNITS
FLOW				E	*							gal/day
Acetone	524.2	20.70	8.20	G	*							mg/L
Ethyl Acetate	1666	20.70	8.20	G	*							mg/L
Isopropyl acetate	1666	20.70	8.20	G	*							mg/L
Methylene chloride	524.2	3.00	0.70	G	*							mg/L
n-Amyl acetate	1666	20.70	8.20	G	*							mg/L
**** No PEG flow this quarter***												
Dilution by lab					20							

RECEIVED
JAN 26 2010
DIVISION OF
ENVIRONMENTAL COMPLIANCE

METROPOLITAN ST. LOUIS SEWER DISTRICT
2009 INDUSTRIAL USER SELF MONITORING REPORT

PLEASE READ THE INSTRUCTIONS BEFORE COMPLETING THIS REPORT

PART I: IDENTIFYING INFORMATION

Company Name: Mallinckrodt Inc.
Permit No.: 2112059600 - 2.1
Premise Address: 3600 North Second St., St. Louis, MO 63147
Monitoring Period: ____(JAN-MAR) ____(APR-JUN) ____(JULY-SEP) _X__(OCT-DEC)
Samples Collected By: Mallinckrodt Inc
Analysis Performed By: TekLab

Part II: ANALYTICAL RESULTS OF SELF MONITORING

MSD SAMPLE POINT REFERENCE NUMBERS			---->		932						
DATES ON WHICH SAMPLES WERE COLLECTED			---->								
TIMES AT WHICH SAMPLES WERE COLLECTED			---->								
PARAMETER	EPA METHOD	DAILY MAX	AVG MONTHLY	**RECORD SAMPLE TYPES (G, C, M OR E) & RESULTS BELOW** G=Grab, C-composite, M=measured flow, E=estimated flow							UNITS
FLOW				E	0						gal/day
Acetone	524.2	20.70	8.20	G	*						mg/L
Benzene	524.2	3.00	0.70	G	*						mg/L
Chlorobenzene	524.2	3.00	0.70	G	*						mg/L
Chloroform	524.2	0.10	0.03	G	*						mg/L
1,2-Dichlorobenzene	524.2	20.70	8.20	G	*						mg/L
1,2-Dichloroethane	524.2	20.70	8.20	G	*						mg/L
Ethyl Acetate	1666	20.70	8.20	G	*						mg/L
n-Hexane	1666	3.00	0.70	G	*						mg/L
Methylene chloride	524.2	3.00	0.70	G	*						mg/L
4-Methyl-2-pentanone	1666	20.70	8.20	G	*						mg/L
Tetrahydrofuran	1666	9.20	3.40	G	*						mg/L
Toluene	524.2	0.30	0.20	G	*						mg/L
Xylenes	1666	3.00	0.70	G	*						mg/L
Isobutyraldehyde	1666	20.70	8.20	G	*						mg/L
n-Amyl acetate	1666	20.70	8.20	G	*						mg/L
n-Butyl acetate	1666	20.70	8.20	G	*						mg/L
Isopropyl acetate	1666	20.70	8.20	G	*						mg/L
Isopropyl ether	1666	20.70	8.20	G	*						mg/L
n-Heptane	1666	3.00	0.70	G	*						mg/L
Methyl formate	1666	20.70	8.20	G	*						mg/L
Diethyl amine	1671	255.00	100.00	G	*						mg/L
Triethyl amine	1671	255.00	100.00	G	*						mg/L
**** No flow this quarter***											
Dilution by lab											

RECEIVED
JAN 26 2010
DIVISION OF
ENVIRONMENTAL COMPLIANCE

METROPOLITAN ST. LOUIS SEWER DISTRICT
2009 INDUSTRIAL USER SELF MONITORING REPORT

PLEASE READ THE INSTRUCTIONS BEFORE COMPLETING THIS REPORT

PART I: IDENTIFYING INFORMATION

Company Name: Mallinckrodt Inc.
Permit No.: 2112059600 - 2.1
Premise Address: 3600 North Second St., St. Louis, MO 63147
Monitoring Period: ____(JAN-MAR) ____(APR-JUN) ____(JULY-SEP) __X__(OCT-DEC)
Samples Collected By: Mallinckrodt Inc
Analysis Performed By: TekLab

Part II: ANALYTICAL RESULTS OF SELF MONITORING

MSD SAMPLE POINT REFERENCE NUMBERS					933						
DATES ON WHICH SAMPLES WERE COLLECTED											
TIMES AT WHICH SAMPLES WERE COLLECTED											
PARAMETER	EPA METHOD	DAILY MAX	AVG MONTHLY	RECORD SAMPLE TYPES (G, C, M OR E) & RESULTS BELOW G=Grab, C-composite, M=measured flow, E=estimated flow							UNITS
FLOW				E	*						gal/day
Acetone	524.2	20.70	8.20	G	*						mg/L
n-Amyl acetate	1666	20.70	8.20	G	*						mg/L
Ethyl Acetate	1666	20.70	8.20	G	*						mg/L
Isopropyl acetate	1666	20.70	8.20	G	*						mg/L
Methylene chloride	524.2	3.00	0.70	G	*						mg/L
** No PEG flow this quarter*											
Dilution by lab					20						

RECEIVED
JAN 2 1 2010
DIVISION OF
ENVIRONMENTAL COMPLIANCE

METROPOLITAN ST. LOUIS SEWER DISTRICT
2009 INDUSTRIAL USER SELF MONITORING REPORT

PLEASE READ THE INSTRUCTIONS BEFORE COMPLETING THIS REPORT

PART I: IDENTIFYING INFORMATION

Company Name: Mallinckrodt Inc.
Permit No.: 2112059600 - 2.1
Premise Address: 3600 North Second St., St. Louis, MO 63147
Monitoring Period: ____(JAN-MAR) ____(APR-JUN) ____(JULY-SEP) __X__(OCT-DEC)
Samples Collected By: Mallinckrodt Inc
Analysis Performed By:

Part II: ANALYTICAL RESULTS OF SELF MONITORING

MSD SAMPLE POINT REFERENCE NUMBERS			---->			935					
DATES ON WHICH SAMPLES WERE COLLECTED			---->								
TIMES AT WHICH SAMPLES WERE COLLECTED			---->								
PARAMETER	EPA METHOD	DAILY MAX	AVG MONTHLY	RECORD SAMPLE TYPES (G, C, M OR E) & RESULTS BELOW G=Grab, C-composite, M=measured flow, E=estimated flow							UNITS
FLOW					E	0					gal/day
Acetone	524.2	20.70	8.20		G	*					mg/L
Benzene	524.2	3.00	0.70		G	*					mg/L
Chlorobenzene	524.2	3.00	0.70		G	*					mg/L
Chloroform	524.2	0.10	0.03		G	*					mg/L
1,2-Dichlorobenzene	524.2	20.70	8.20		G	*					mg/L
1,2-Dichloroethane	524.2	20.70	8.20		G	*					mg/L
Ethyl Acetate	1666	20.70	8.20		G	*					mg/L
n-Hexane	1666	3.00	0.70		G	*					mg/L
Methylene chloride	524.2	3.00	0.70		G	*					mg/L
4-Methyl-2-pentanone	1666	20.70	8.20		G	*					mg/L
Tetrahydrofuran	1666	9.20	3.40		G	*					mg/L
Toluene	524.2	0.30	0.20		G	*					mg/L
Xylenes	1666	3.00	0.70		G	*					mg/L
Isobutyraldehyde	1666	20.70	8.20		G	*					mg/L
n-Amyl acetate	1666	20.70	8.20		G	*					mg/L
n-Butyl acetate	1666	20.70	8.20		G	*					mg/L
Isopropyl acetate	1666	20.70	8.20		G	*					mg/L
Isopropyl ether	1666	20.70	8.20		G	*					mg/L
n-Heptane	1666	3.00	0.70		G	*					mg/L
Methyl formate	1666	20.70	8.20		G	*					mg/L
Diethyl amine	1671	255.00	100.00		G	*					mg/L
Triethyl amine	1671	255.00	100.00		G	*					mg/L
** No PEG flow this quarter*											
Dilution by lab											

RECEIVED
JAN 2 4 2010
DIVISION OF
ENVIRONMENTAL COMPLIANCE

METROPOLITAN ST. LOUIS SEWER DISTRICT
2009 INDUSTRIAL USER SELF MONITORING REPORT

PLEASE READ THE INSTRUCTIONS BEFORE COMPLETING THIS REPORT

PART I: IDENTIFYING INFORMATION

Company Name: Mallinckrodt Inc.
Permit No.: 2112059600 - 2.1
Premise Address: 3600 North Second St., St. Louis, MO 63147
Monitoring Period: ____(JAN-MAR) _____(APR-JUN) ____(JULY-SEP) __X__(OCT-DEC)
Samples Collected By: Mallinckrodt Inc
Analysis Performed By: TEKLAB

Part II: ANALYTICAL RESULTS OF SELF MONITORING

MSD SAMPLE POINT REFERENCE NUMBERS					936						
DATES ON WHICH SAMPLES WERE COLLECTED					10/1/2009						
TIMES AT WHICH SAMPLES WERE COLLECTED					7:25						
PARAMETER	EPA METHOD	DAILY MAX	AVG MONTHLY	RECORD SAMPLE TYPES (G, C, M OR E) & RESULTS G=Grab, C-composite, M=measured flow, E=estimated flow							UNITS
FLOW				E	14,400						gal/day
Acetone	524.2	20.70	8.20	G	<1						mg/L
n-Amyl acetate	1666	20.70	8.20	G	<0.100						mg/L
Benzene	524.2	3.00	0.70	G	<0.100						mg/L
n-Butyl acetate	1666	20.70	8.20	G	<0.100						mg/L
Chlorobenzene	524.2	3.00	0.70	G	<0.100						mg/L
Chloroform*	524.2	0.10	0.03	G	<0.020						mg/L
1,2-Dichlorobenzene	524.2	20.70	8.20	G	<0.100						mg/L
1,2-Dichloroethane	524.2	20.70	8.20	G	<0.100						mg/L
Diethyl amine	1671	255.00	100.00	G	**						mg/L
Ethyl Acetate	1666	20.70	8.20	G	<0.200						mg/L
n-Heptane	1666	3.00	0.70	G	<0.200						mg/L
n-Hexane	1666	3.00	0.70	G	<0.200						mg/L
Isobutyraldehyde	1666	20.70	8.20	G	<0.200						mg/L
Isopropyl acetate	1666	20.70	8.20	G	<0.100						mg/L
Isopropyl ether	1666	20.70	8.20	G	<0.100						mg/L
Methylene chloride	524.2	3.00	0.70	G	<0.100						mg/L
Methyl formate	1666	20.70	8.20	G	<1						mg/L
4-Methyl-2-pentanone	1666	20.70	8.20	G	<0.200						mg/L
Tetrahydrofuran	1666	9.20	3.40	G	<0.400						mg/L
Toluene	524.2	0.30	0.20	G	<0.100						mg/L
Triethyl amine	1671	255.00	100.00	G	**						mg/L
Xylenes	1666	3.00	0.70	G	<0.100						mg/L
* Chloroform Results	Raw Water	SP936									
10/1/2009	<0.020 mg/l	<0.020 mg/l									
Results above reported as the difference between SP936 and Raw Water.											
** Annual sampling requirement for these parameters.											
Dilution by lab					20						

RECEIVED
JAN 2 6 2010
DIVISION OF
ENVIRONMENTAL COMPLIANCE

METROPOLITAN ST. LOUIS SEWER DISTRICT
2009 INDUSTRIAL USER SELF MONITORING REPORT

PLEASE READ THE INSTRUCTIONS BEFORE COMPLETING THIS REPORT

PART I: IDENTIFYING INFORMATION

Company Name: Mallinckrodt Inc.
Permit No.: 2112059600 - 2.1
Premise Address: 3600 North Second St., St. Louis, MO 63147
Monitoring Period: ___(JAN-MAR) ____(APR-JUN) ____(JULY-SEP) __X__(OCT-DEC)
Samples Collected By: Mallinckrodt Inc
Analysis Performed By: TEKLAB

Part II: ANALYTICAL RESULTS OF SELF MONITORING

MSD SAMPLE POINT REFERENCE NUMBERS					**937**							
DATES ON WHICH SAMPLES WERE COLLECTED					10/6/2009							
TIMES AT WHICH SAMPLES WERE COLLECTED					13:45							
PARAMETER	EPA METHOD	DAILY MAX	AVG MONTHLY		**RECORD SAMPLE TYPES (G, C, M OR E) & RESULTS BELOW** G=Grab, C-composite, M=measured flow, E=estimated flow							UNITS
FLOW				E	22,000							gal/day
Tetrahydrofuran	524.2	9.20	3.40	G	<0.400							mg/L
Toluene	524.2	0.30	0.20	G	<0.100							mg/L
Dilution by lab					20							

RECEIVED
JAN 26 2010
DIVISION OF
ENVIRONMENTAL COMPLIANCE

METROPOLITAN ST. LOUIS SEWER DISTRICT
2009 INDUSTRIAL USER SELF MONITORING REPORT

PLEASE READ THE INSTRUCTIONS BEFORE COMPLETING THIS REPORT

PART I: IDENTIFYING INFORMATION

Company Name: Mallinckrodt Inc.
Permit No.: 2112059600 - 2.1
Premise Address: 3600 North Second St., St. Louis, MO 63147
Monitoring Period: _____(JAN-MAR) ____(APR-JUN) ____(JULY-SEP) __X__(OCT-DEC)
Samples Collected By: Mallinckrodt Inc
Analysis Performed By: TekLab

Part II: ANALYTICAL RESULTS OF SELF MONITORING

MSD SAMPLE POINT REFERENCE NUMBERS			---->			**938**						
DATES ON WHICH SAMPLES WERE COLLECTED			---->			11/6/2009						
TIMES AT WHICH SAMPLES WERE COLLECTED			---->			10:00						
PARAMETER	EPA METHOD	DAILY MAX	AVG MONTHLY	**RECORD SAMPLE TYPES (G, C, M OR E) & RESULTS BELOW** G=Grab, C-composite, M=measured flow, E=estimated flow								**UNITS**
FLOW					E	3,000						gal/day
Acetone	524.2	20.70	8.20		G	<1						mg/L
n-Amyl acetate	1666	20.70	8.20		G	<0.100						mg/L
Ethyl Acetate	1666	20.70	8.20		G	<0.200						mg/L
Isopropyl acetate	1666	20.70	8.20		G	<0.100						mg/L
Methylene chloride	524.2	3.00	0.70		G	<0.100						mg/L
Dilution by lab						20						

RECEIVED
JAN 2 4 2010
DIVISION OF
ENVIRONMENTAL COMPLIANCE

COVIDIEN

RECEIVED

JAN 27 2010

DIVISION OF
ENVIRONMENTAL COMPLIANCE

JANUARY 25, 2010

Mr. Steve Grace
Metropolitan St. Louis Sewer District
Department of Environmental Compliance
10 East Grand Avenue
St. Louis, MO 63147-2913

RE: Special Discharge Follow-up - PERMIT NO. 2112059600-2.1

Dear Mr. Grace:

On January 12, 2010 an approval from MSD was received to discharge 1700 gallons of a 20% ethylene glycol and water solution from Building 96.

On January 14, 2010 an estimated amount of 1870 gallons of the 20% ethylene glycol and water solution was discharged through plant sewers to the plant's neutralization system and to MSD.

If you have any questions or need additional information, please call me at 314.654.3374.

Sincerely,

Lisa Meyer
Senior HSE Engineer

COVIDIEN/MALLINCKRODT
3600 NORTH SECOND STREET
ST. LOUIS, MO 63147

TELEPHONE: 314-654-2000
FAX: 314-654-1251

Metropolitan St. Louis Sewer District
Division of Environmental Compliance
10 East Grand Avenue
St. Louis, MO 63147-2913
Phone: 314.768.6200 www.stlmsd.com

January 12, 2010

Lisa Meyer
MALLINCKRODT
3600 North Second St.
St. Louis, MO 63147

Dear Ms. Meyer:

We have reviewed your application dated January 4, 2010 requesting approval to discharge 1,700 gallons of wastewater to the Metropolitan St. Louis Sewer District for treatment. This wastewater is a 20% ethylene glycol solution from the chiller system at Building 96 of the Mallinckrodt facility located at 3600 North Second Street, St. Louis, Missouri.

Based on the information you provided, this wastewater meets MSD Ordinance 12559 standards and is approved for discharge into a sanitary sewer on site. Due to the elevated chemical oxygen demand concentrations, (COD) this discharge is limited to 780 gallons per hour. This approval is valid for 30 days from the date of this letter.

You must be certain the waste is discharged into a sanitary or combined sewer inlet only. This letter does not authorize any discharge to a separate storm sewer, or to any watercourse, as any such discharge would be in violation of state and federal laws. **Please notify me at the number below when the discharge is to commence.**

For billing purposes associated with this high COD wastewater, you must confirm the volume of this wastewater discharged to us, in writing, at the completion of the discharge. This report is due no later than 28 days after this approval expires. Please refer to this letter and include the date of the discharge when providing that figure. Under the provisions of Ordinance 12754, you will be billed by invoice at the billing rate in effect at the time of discharge. The current rates contained in MSD Ordinance 12754, is $1.92 per hundred cubic feet ($2.57 per thousand gallons) and $275.76 per ton for COD over 600 mg/L. Using the COD analytical data and proposed discharge volume provided in your application, it is estimated that you will be discharging slightly more that 1 ton of COD over 600 mg/L. (Our quantitative estimate is 1.4 tons COD times $275.76.) Please do not pay this amount until you receive our invoice.

This discharge has been approved based upon the information and sample analysis you provided and is subject to the conditions stated above. This approval may be revoked by the District at any time if any of the information is found to be incorrect, or if the conditions of this approval are violated. Also, if the discharge causes any operational or maintenance problem within the District's collection or treatment system, or results in violations of any conditions of the District's NPDES permit, Mallinckrodt will be considered responsible for damages.

If you have any questions, please call me at (314) 436-8742.

Sincerely,
METROPOLITAN ST. LOUIS SEWER DISTRICT
Steven M. Grace
Steve Grace
Environmental Assistant Engineer

bv

pc: Nora Estopare

File: IU, MALLINCKRODT INC [2112059600]

C1A

SD EVALUATION CHECKLIST - ON SITE

APPLICATION INFORMATION

Source Name: Mallinckrodt Inc. Evaluated by: SMG na

Premise Address: 3600 N. 2nd St. Date: 1/12/10

Send approval letter to applicant

Application Dated: 1/4/10 Received: 1/4/10 All Requested Info. Received: 1/8/10

SOURCE FILING/DESCRIPTION

1 - Source in PIMS? Y / N
2 - If No, on IU Cross-Ref list? * Y / N
3 - If No, MSD Account # from E-CIS? Y / N
4 - If none, on "Source" list (pre-IMS)? ** Y / N
5 - If No, assigned SOUR# from PIMS.

SOURCE TYPE (circle): (IU) / Dead IU / SD

INDUSTRY ID: 21120596-00

* o:\costrecovery\cross reference xls file

** o:\costrecovery\sourlist xls file

Sample Point: No. Assigned: 821 Description: 20% ethylene glycol/water mixture from the Bldg. 96 chiller system

Normal WW flow from premise? (N/A) _____ ccf/month, _____ GPD, _____ GPH.

REGULATORY STATUS

Is waste a Hazardous Waste? (N) / Y

Categorical standards apply? (N) / Y

Contain PCB/ asbestos/ radioactive/ dioxin/ used oil? (N) / Y

Regulatory Agency Oversight? (N) / Y

DISCHARGE CONSIDERATIONS At MSD's connection:

Ordinance Limits (12559, p32) exceeded? (N) / Y

Ordinance other limits exceeded (dye, flash pt <140F, temp >140F, obstruction, nuisance foaming/odor, corrosion causing): (N) / Y

Water Quality Standard exceeded? (N) / Y

Fumes in sewer exceed PEL/TLV limits? (N) / Y

Vapors in sewer exceed 10% of LEL? (N) / Y

RECOMMENDATION: (APPROVE) / DENY (cc WWTP Mgr for timed discharge)

APPROVAL CONDITIONS:

Timed Discharge (COD/BOD/WQ/foam): N / (Y) Limit = 180 gal/hour

Require Treatment before Discharge? (N) / Y

Laboratory analysis fee due? (N) / Y $_____

SMR required? (N) / Y Frequency/analysis: _____

SMR log: (N/A) / Remediation.xls / Nonremediation.xls

Volume Billing applies (water unmetered or credited)? (N) / Y

Bill High Strength? N / (Y) Yes, If use >60,000 gal/month water X and, > norm WW strgth

Surcharge calculation attached: N/A / N / (Y)

Expiration log updated: (N/A) / N / Y

O:\CostRecovery\Special Discharge\C1a.Checklist doc

On-Site Special Discharge High Strength Flow Rate and Surcharge Calculator

1 GENERAL INFORMATION:

Date: 01/12/10
Calculated by: Steve Grace
Source name: Mallinckrodt, Inc.
Waste material: Used ethylene glycol solution from building 96 chiller system
Discharge volume: 1,700 gallons

2 STRENGTH INFORMATION:

Sample BOD =	0	mg/l =	0	lbs BOD to be discharged
Sample COD =	219,000	mg/l =	3105	lbs COD to be discharged
Sample TSS =	0	mg/l =	for surcharge calculation only	

3 PLANT DATA: 2010

Treatment area: Bissell

	Flow (MGD)	BOD (mg/L)	COD (mg/L)	BOD (lb/hr)	COD (lb/hr)	Max Loading = 10% BOD (lb/hr)	COD (lb/hr)
Bissell	**140**	**146**	**292**	**7,113**	**14,227**	**711**	**1,423**
Coldwater	26	188	377	1,704	3,408	170	341
Fenton	5	388	776	679	1,357	68	136
Grand Glaize	16	129	405	708	2,218	71	222
Lemay	131	78	210	3,531	9,584	353	958
Lower Meramec	13	124	409	543	1,785	54	179
Missouri River	27	280	559	2,671	5,341	267	534

4 MINIMUM REQUIRED FLOW RATE:

	BOD (hours	BOD (gpm)	COD (hours)	COD (gpm)
Bissell	**0.00**	**0**	**2.18**	**13**
Coldwater	0.00	0	9.11	3
Fenton	0.00	0	22.88	1
Grand Glaize	0.00	0	14.00	2
Lemay	0.00	0	3.24	9
Lower Meramec	0.00	0	17.39	2
Missouri River	0.00	0	5.81	5

5 SURCHARGE AND VOLUME BILLING

Is volume subject to billing? no (yes/no)
Ratio of BOD/COD = 0.00

(Sample BOD) - 300 = 0 mg/l subject to surcharge
(sample COD) - 600 = 218400 mg/l subject to surcharge
(sample TSS) - 300 = 0 mg/l subject to surcharge

If BOD/COD ratio <= 0.35, the following calculations use the COD value. Otherwise they use the BOD value

Current rates under Ordinance: 12754

Volume = $ 1.92 /CcF
BOD = $ 551.52 /ton
COD = $ 275.76 /ton
TSS = $ 218.90 /ton

Flow charge = $ - based on volume = 2 CcF
BOD surcharge = $ -
COD surcharge = $ 375.81
TSS surcharge = $ -
Total discharge charge = $ 375.81
Customer charge = $ 375.81 DEC charges special discharge customers for total charges > $20.00
Approximate charge/gallon = $ 0.25

Comments

COVIDIEN

Facsimile Communication

To: Mr. Steve Grace

Company: MSD Environmental Compliance

Fax Number: 314.436.8766

Date: January 4, 2010

Number of Pages *(including cover sheet)*: 9

Health, Safety, Environmental

Lisa Meyer
Senior HSE Engineer

Covidien/Mallinckrodt
3600 N. Second St.
St. Louis, Missouri 63147

Telephone 314-654-3374
Facsimile 314-654-1251

- ☐ For your information
- X Please respond
- ☐ Urgent
- ☐ Confidential

Comments:

Dear Mr. Grace,

Attached please find an application for the Special Discharge of a 20% ethylene glycol and water solution from Building 96. If you have any questions or need additional information, please contact me.

Thank you,

Lisa Meyer

Metropolitan St. Louis Sewer District

Phone No. (314) 436-8710
Division of Environmental Compliance, 10 East Grand Avenue, St. Louis, Missouri 63147 Fax No. (314) 436-8766

APPLICATION FOR SPECIAL DISCHARGE APPROVAL

I. WASTEWATER SOURCE IDENTIFICATION:

Site Name: Mallinckrodt
Premise Address: 3600 North 2nd St.
City: St. Louis State: MO Zip: 63147
Owner: Mallinckrodt
Contact Person: Lisa Meyer
Title: Senior HSE Engineer
Phone: 314.654.3374 Fax: 314.654.1251

II. APPLICANT (mailing information):

Applicant Name: Lisa Meyer
Title: Senior HSE Engineer
Company Name: Mallinckrodt
Mailing Address: 3600 North 2nd St.
City: St. Louis State: MO Zip: 63147
Phone: 314.654.3374 Fax: 314.654.1251

III. A. MATERIAL TO BE DISCHARGED (check all applicable boxes):

1. Wastewater description/location: Building 96 ethylene glycol / water
2. Process/activity generating wastewater: Building 96 chiller system ethylene glycol / water
3. Physical and chemical composition: List all constituents, and known or potentially present regulated contaminants below.
   ☐ See separate listing enclosed, and/or ☐ See analytical results enclosed, and/or ☑ Material Safety Data Sheet enclosed.

DESCRIPTION	RANGE	UNIT
ethylene glycol	20	%
Water	60	%

DESCRIPTION *(continued)*	RANGE	UNIT

4. Is this wastewater from a process subject to EPA's categorical standards in 40 CFR Subchapter N? ☐ Yes ☑ No
   a. If yes, the applicable standards are in: 40 CFR Part _____, Subpart _____ ☐ Existing source ☐ New source
5. Does this wastewater contain polychlorinated biphenyls, asbestos or radioactive material? ☐ Yes ☑ No
   a. If yes, describe: _____
6. Representative sample: ☐ Laboratory results attached, and/or ☐ Sample provided (1/2 gallon minimum, clear container)
   a. Sample collection point/location: _____ Collection method: _____
   b. Sampler's name/Co.: _____ Sample date/time: _____
   c. Attach chain of custody as available
7. Discharge will occur over the following time period: ☑ < 30 days ☐ ≥ Two years ☐ Other: _____
   a. Expected total volume of wastewater to be discharged over the time period above: 1700 Gallons
   b. Proposed discharge volume: 1700 Gallons, at a frequency of: ☑ One time ☐ Daily ☐ Weekly ☐ Monthly ☐ Once/three months ☐ Once/six months ☐ Other: _____
8. Pretreatment of wastewater prior to discharge: ☑ None ☐ Yes, describe: _____
   a. If yes, attach site plan, pretreatment system schematic, and design specifications.
9. Wastewater from a remediation project under: ☐ Superfund/CERCLA ☐ RCRA ☐ Voluntary program ☐ UST ☑ Not applicable
   a. If from a remediation project, briefly describe the past and present utilization of the property: _____

III.B. MATERIAL FROM UNDERGROUND STORAGE TANK SOURCE

☑ **Not applicable (go to Section IV)**

Please answer the following questions if you are requesting to discharge wastewater associated with an underground storage tank system.

1. a. Wastewater from: ☐ Inside UST(s) ☐ UST system pit ☐ Excavation outside UST system pit ☐ Monitoring well ☐ Groundwater remediation system

   b. UST project involves wastewater from: ☐ UST(s) closed in place ☐ UST(s) removed ☐ Remediation ☐ Upgrade ☐ Maintenance activities ☐ Well monitoring ☐ Other, explain: _____

   c. If wastewater is from a closure project, how long has UST(s) been out of service: _____ years

2. a. State assigned UST site identification number: _____ ☐ Not applicable

   b. Number of USTs affected: _____ ☐ Unknown

   c. For the UST(s) involved, their state identification number(s): _____ ☐ Not applicable

   d. Service Station Identification Number, as applicable: _____

3. Tank contents/former contents: ☐ Gasoline ☐ #2 diesel ☐ Used oil ☐ Unknown ☐ Other: _____

IV. DISCHARGE LOCATION

1. ☑ On-site. Describe proposed point of entry to sewer and the discharge rate (must be a sanitary or combined sewer): _____
Building 96 sewer to MSD sewer _____ Note: Range of discharge must not surcharge sewer line.

2. ☐ Haul to MSD Bissell Point Hauled Waste Receiving Station at 10 E. Grand, St. Louis, MO.

   a. Transporters Name: _____ and MSD Hauler ID Number: _____

   b. Hazardous Waste Certification:

   For wastewater which is hauled to MSD's Bissell Point Hauled Waste Receiving Station, I hereby certify that to the best of my knowledge and belief, the above hauled waste is not classified as a RCRA "hazardous waste" as defined by the MDNR in 10 CSR 25 or USEPA in 40 CFR Part 261.

   Applicant Name (print): _____

   Signature: _____ **Date:** _____

ADDITIONAL INFORMATION:

_____

_____

_____

_____

_____

_____

V. APPLICANT SIGNATURE AND CERTIFICATION

This application must be signed by the applicant: either the source contact, or a contractor or agent directly responsible for site activities.

I hereby certify that I am directly responsible for activities at the site regarding the wastewater to be discharged, and to the best of my knowledge and belief, based on appropriate inquiry, the information in this application is true, complete, and accurate. The samples or analyses submitted are representative of the materials to be discharged. If granted approval to discharge, I agree to abide by the MSD Ordinances, and all applicable federal, state and local regulations. I agree to pay the costs of any pre-approval analyses performed by MSD and to pay any applicable disposal charges for the volume and strength of the wastes discharged.

Applicant Name (print): Lisa Meyer

Signature: Lisa Meyer **Date:** 1/4/2010

FOR MSD USE ONLY:

File Name: Mallinckrodt, Inc. ID No. 21120596-00 Sample Point No. 821

TEKLAB, INC.

5445 HORSESHOE LAKE ROAD
COLLINSVILLE, ILLINOIS 62234

ENVIRONMENTAL TESTING LABORATORY

TEL: 618-344-1004
FAX: 618-344-1005

January 06, 2010

Lisa Meyer
Mallinckrodt Inc.
3600 N. 2nd St.
St. Louis, MO 63147
TEL: (314) 654-3374
FAX: (314) 654-1251

ACCREDITED IN ACCORDANCE WITH

NELAP Accredited #100226

RE: B96 Glycol

WorkOrder: 10010100

Dear Lisa Meyer:

TEKLAB, INC received 1 sample on 1/5/2010 4:20:00 PM for the analysis presented in the following report.

Samples are analyzed on an as received basis unless otherwise requested and documented. The sample results contained in this report relate only to the requested analytes of interest as directed on the chain of custody. IL ELAP and NELAP accredited fields of testing are indicated by the letters NELAP under the Certification column.

All quality control criteria applicable to the test methods employed for this project have been satisfactorily met and are in accordance with NELAP except where noted. The following report shall not be reproduced, except in full, without the written approval of Teklab, Inc.

If you have any questions regarding these tests results, please feel free to call.

Sincerely,

Heather A. White

Heather A. White
Project Manager
(618)344-1004 ex 20

TEKLAB, INC.

5445 HORSESHOE LAKE ROAD
COLLINSVILLE, ILLINOIS 62234

ENVIRONMENTAL TESTING LABORATORY

TEL: 618-344-1004
FAX: 618-344-1005

Client: Mallinckrodt Inc.
Project: B96 Glycol
LabOrder: 10010100
Report Date: 06-Jan-10

CASE NARRATIVE

Cooler Receipt Temp: 0.4 °C

State accreditations:

KS: NELAP #E-10347 | KY: UST #0073 | MO: DNR #00930 | AR: ADEQ #70-028-0

Qualifiers

DF - Dilution Factor	**B** - Analyte detected in the associated Method Blank	**C** - Client requested RL below PQL
RL - Reporting Limit	**J** - Analyte detected below reporting limits	**D** - Diluted out of sample
ND - Not Detected at the Reporting Limit	**R** - RPD outside accepted recovery limits	**E** - Value above quantitation range
Surr - Surrogate Standard added by lab	**S** - Spike Recovery outside accepted recovery limits	**H** - Holding time exceeded
TNTC - Too numerous to count (> 200 CFU)	**X** - Value exceeds Maximum Contaminant Level	**MI** - Matrix interference
Q - QC criteria failed or noncompliant CCV	**#** - Unknown hydrocarbon	**DNI** - Did not ignite
NELAP - IL ELAP and NELAP Accredited Field of Testing	**IDPH** - IL Dept. of Public Health	

TEKLAB, INC.

5445 HORSESHOE LAKE ROAD
COLLINSVILLE, ILLINOIS 62234

ENVIRONMENTAL TESTING LABORATORY

TEL: 618-344-1004
FAX: 618-344-1005

LABORATORY RESULTS

Client: Mallinckrodt Inc.
WorkOrder: 10010100
Lab ID: 10010100-001
Report Date: 06-Jan-10

Client Project: B96 Glycol
Client Sample ID: B96
Collection Date: 1/5/2010 1:00:00 PM
Matrix: AQUEOUS

Analyses	Certification	RL	Qual	Result	Units	DF	Date Analyzed	Analyst
EPA 600 410.4								
Chemical Oxygen Demand	NELAP	20000		**219000**	mg/L	400	1/6/2010 10:00:00 AM	BSJ

Sample Narrative

TEKLAB, INC.

5445 HORSESHOE LAKE ROAD
COLLINSVILLE, ILLINOIS 62234

ENVIRONMENTAL TESTING LABORATORY

TEL: 618-344-1004
FAX: 618-344-1005

RECEIVING CHECK LIST

Client: Mallinckrodt Inc.
Project: B96 Glycol
Lab Order: 10010100
Report Date: 06-Jan-10

Carrier: Tim Mathis

Received By: MLD

Completed by: Marvin L. Darling II
On: 05-Jan-10
Marvin L. Darling

Reviewed by: Heather A. White
On: 06-Jan-10
Heather A. White

Pages to follow: Chain of custody 1 Extra pages included 0

Shipping container/cooler in good condition?	Yes ☑	No ☐	Not Present ☐	Temp °C 0.4
Type of thermal preservation?	None ☐	Ice ☑	Blue Ice ☐	Dry Ice ☐
Chain of custody present?	Yes ☑	No ☐		
Chain of custody signed when relinquished and received?	Yes ☑	No ☐		
Chain of custody agrees with sample labels?	Yes ☑	No ☐		
Samples in proper container/bottle?	Yes ☑	No ☐		
Sample containers intact?	Yes ☑	No ☐		
Sufficient sample volume for indicated test?	Yes ☑	No ☐		
All samples received within holding time?	Yes ☑	No ☐		
Reported field parameters measured:	Field ☐	Lab ☐	NA ☑	
Container/Temp Blank temperature in compliance?	Yes ☑	No ☐		
When thermal preservation is required, samples are compliant with a temperature between 0.1°C - 6.0°C, or when samples are received on ice the same day as collected.				
Water - VOA vials have zero headspace?	Yes ☐	No ☐	No VOA vials ☑	
Water - TOX containers have zero headspace?	Yes ☐	No ☐	No TOX containers ☑	
Water - pH acceptable upon receipt?	Yes ☑	No ☐		

Any No responses must be detailed below or on the COC.

CHAIN OF CUSTODY

pg. ____ of ____ Work Order # 1001010

TEKLAB, INC. 5445 Horseshoe Lake Road ~ Collinsville, IL 62234 ~ Phone: (618) 344-1004 ~ Fax: (618) 344-1005

Client: Mallinckrodt
Address: 3600 N 2nd St
City / State / Zip: St Louis MO 63147
Contact: Lisa Meyer Phone: 314 654 3374
E-Mail: Fax:

Samples on: ☒ Ice ☐ Blue Ice ☐ No Ice °C 0.4
Preserved in: ☐ Lab ☒ Field DG 1/5/10 FOR LAB USE ONLY
Lab Notes:
Comments:

1 DAY Teklab, Inc. Courier Pick Up

- Are these samples known to be involved in litigation? If yes, a surcharge will apply. ☐ Yes ☒ No
- Are these samples known to be hazardous? ☐ Yes ☒ No
- Are there any required reporting limits to be met on the requested analysis? If yes, please provide limits in comment section. ☐ Yes ☒ No

Project Name / Number: B96 Glycol
Sample Collector's Name: DW
Results Requested: ☐ Standard ☒ 1-2 Day (100% Surcharge) ☐ Other_____ ☐ 3 Day (50% Surcharge)
Billing Instructions:

Lab Use Only	Sample Identification	Date/Time Sampled	UNPRES	HNO_3	NaOH	H_2SO_4	HCL	MeOH	$NaHSO_4$	Other	Water	Drinking Water	Soil	Sludge	Sp. Waste	COD
1001010-01	B96	1/5/10 1300				1					X					X

Relinquished By	Date / Time	Received By	Date / Time
[signature]	1/5/10 1551	[signature]	1.5.10 1551
[signature]	1.5.10 1620	[signature]	1/5/10 1620

The individual signing this agreement on behalf of client acknowledges that he/she has read and understands the terms and conditions of this agreement, on the reverse side, and that he/she has the authority to sign on behalf of client.

WHITE & YELLOW – LAB PINK – SAMPLER'S COPY

MSD 011981

COVIDIEN

DECEMBER 23, 2009

Mr. Doug Mendoza
Metropolitan St. Louis Sewer District
Department of Environmental Compliance
10 East Grand Avenue
St. Louis, MO 63147-2913

RE: Five Day Follow up Report Overflow at Sample Point 011
PERMIT NO. 2112059600-2.1

Dear Mr. Mendoza:

On December 17, 2009 at approximately 0400, it was discovered that the Plant 5 lift station pumps were not operating and wastewater was overflowing to MSD. The computer screens used by the utilities personnel incorrectly indicated that the pumps were operating which caused the delay in identifying the overflow event. It has been determined that the pumps stopped operating as a result of a blown fuse of the pumps' Input/Output controller card. Once the overflow event was identified, the pumps were manually started and the overflow was stopped. It was determined that the overflow had occurred from approximately 1130 on December 16, 2009 and was ceased at 0520 on December 17, 2009. As soon as the overflow event was identified, overflow samples as well as pH readings were taken at the outfall.

There is currently an investigation underway to determine root causes and corrective actions associated with this event.

If you have any questions or need additional information, please call me at 314.654.3374.

Sincerely,

Julie Summers for

Lisa Meyer
Senior HSE Engineer

RECEIVED
DEC 30 2009
DIVISION OF
ENVIRONMENTAL COMPLIANCE

COVIDIEN/MALLINCKRODT
3600 NORTH SECOND STREET
ST. LOUIS, MO 63147

TELEPHONE: 314-654-2000
FAX: 314-654-1251

PIMS - Pretreatment Information Management System [PIMS St. Louis (PIMS)]

File Edit Records Worklists Reports/Letters Tools Window Help

General Info | Sample Points | Metering | Monitoring | Permits | Results | Compliance | Enforcement | Water Use | Spec Dischrg

Facility ID: 2112059600 Name: MALLINCKRODT INC [2112059600] SIU: ☑ Class: Categorical Industrial User

Results

Start Date: 07/01/2008 End Date: Apply

Events | Inspections | Sampling | Limit Comp | Violations | SMDE | Gen Rpts | **Notifications** | Surcharge | Surcharge Export

Notification Type	Date
Problem Discharge - 5 Day Written Follow Up	01/29/2009
Problem Discharge - Immediate Telephone No	01/26/2009
Problem Discharge - 5 Day Written Follow Up	01/02/2009
Problem Discharge - Immediate Telephone No	12/28/2008
Problem Discharge - 5 Day Written Follow Up	12/12/2008
Problem Discharge - Immediate Telephone No	12/10/2008
Problem Discharge - 5 Day Written Follow Up	11/19/2008
Problem Discharge - Immediate Telephone No	11/18/2008
Problem Discharge - Immediate Telephone No	11/12/2008
Problem Discharge - 5 Day Written Follow Up	11/05/2008
Problem Discharge - Immediate Telephone No	10/30/2008
Problem Discharge - 5 Day Written Follow Up	08/07/2008
Problem Discharge - Immediate Telephone No	08/01/2008
Problem Discharge - Immediate Telephone No	12/17/2009

Text

Lisa Meyer called at 9:00 am to report that the Plant 5 Lift Station lost power yesterday. It was discovered at 4:00 am this morning. Power was lost at 11:30 am yesterday, but controllers showed it as still operating. Therefore, pH of overflow was not monitored (as per permit requirement) during the time it wasn't detected. She will be sending follow up letter.

Save Successful

Dec 17, 2009 9:38:25 AM

start | Inbox - Microsoft Out... | Industry Files - Laser... | PIMS - Pretreatment ... | 9:38 AM

RECEIVED

11 2009

DIVISION OF
ENVIRONMENTAL COMPLIANCE

COVIDIEN

RECEIVED

11 2009

DIVISION OF
ENVIRONMENTAL COMPLIANCE

Mallinckrodt

DECEMBER 10, 2009

Mr. Steve Grace
Metropolitan St. Louis Sewer District
Department of Environmental Compliance
10 East Grand Avenue
St. Louis, MO 63147-2913

RE: Special Discharge Follow-up - PERMIT NO. 2112059600-2.1

Dear Mr. Grace:

On December 15, 2008 an approval from MSD was received to discharge 7500 gallons of a Rydlyme/pH slayer solution used for heat/cool module cleanouts during the October, 2008 electrical shutdown. A permit extension was granted on January 26, 2009. This solution was discharged on February 16, 2009.

On September 9, 2009 an approval from MSD was received to discharge 370 gallons of a reduced Diamide solution from Building 507. This material was never discharged and therefore, we would like to retract this request and close out this permit.

On October 7, 2009 an approval from MSD was received to discharge 200 gallons of a 50% ethylene glycol/water solution from a tank jacket leak in Building 97. This was discharged on October 7, 2009.

If you have any questions or need additional information, please call me at 314.654.3374.

Sincerely,

Lisa Meyer

Lisa Meyer
Senior HSE Engineer

COVIDIEN/MALLINCKRODT
3600 NORTH SECOND STREET
ST. LOUIS, MO 63147

TELEPHONE: 314-654-2000
FAX: 314-654-1251

COVIDIEN

DECEMBER 10, 2009

RECEIVED

DEC 11 2009

DIVISION OF
ENVIRONMENTAL COMPLIANCE

Mallinckrodt

Mr. Steve Grace
Metropolitan St. Louis Sewer District
Department of Environmental Compliance
10 East Grand Avenue
St. Louis, MO 63147-2913

RE: Special Discharge Follow-up - PERMIT NO. 2112059600-2.1

Dear Mr. Grace:

On September 3, 2009 an approval from MSD was received to discharge approximately 2300 gallons of wastewater to MSD for treatment. This wastewater was the result of a new pharmaceutical product under development in Building 97. An extension of this permit was granted on October 7, 2009 with an expiration date of November 3, 2009.

The wastewater was discharged in various amounts on multiple days during the production run. These dates and amounts were approved via email by you for discharge and are summarized below.

Date of Discharge	Amount (gallons)
October 7, 2009	200
October 13, 2009	600
October 14, 2009	200
October 22, 2009	1200
October 23, 2009	400
October 29, 2009	100

Actual total amount of wastewater discharged through this Special Discharge permit was 2700 gallons.

If you have any questions or need additional information, please call me at 314.654.3374.

Sincerely,

Lisa Meyer

Lisa Meyer
Senior HSE Engineer

COVIDIEN/MALLINCKRODT
3600 NORTH SECOND STREET
ST. LOUIS, MO 63147

TELEPHONE: 314-654-2000
FAX: 314-654-1251

Metropolitan Saint Louis Sewer District
2350 Market Street
Saint Louis, Missouri 63103-2555

MALLINCKRODT INC.
3600 N. 2nd St.
St. Louis, MO 63147

Attn: Lisa Meyer
HS&E Engineer

INDUSTRIAL WASTEWATER DISCHARGE PERMIT NUMBER 2112059600.

ANNUAL PERMIT FEE NOTICE

For permits in effect as of 10/01/2009.

Fee will be included in a **separate bill** from the Metropolitan St. Louis Sewer District.

Explanation of Charges

Fee for Pretreatment Program Discharge Permit covering the period October 1, 2009 through September 30, 2010 issued in accordance with the Metropolitan St. Louis District Ordinance #12413 for the location at **3600 N 2nd St.**

Base charge @ $150.00 per permit			$150.00
Volume charge @ $0.72 per average daily Ccf	1143.56	Ccf(s)	$1,039.36
Sample Point Charge @ $100.00 per sample point	22	Point(s)	$2,200.00
		Total Fee Due:	**$3,389.36**

For inquiries about the Annual Permit Fee, please call 314-436-8756. For inquiries about payment of the fee, which will appear on your upcoming monthly bill, please call 1-866-281-5737.

THIS IS NOT A BILL

DO NOT PAY NOW

FEE WILL BE INCLUDED IN A SEPARATE BILL

Metropolitan St. Louis Sewer District
Division of Environmental Compliance
10 East Grand Avenue
St. Louis, MO 63147-2913
Phone: 314.768.6200 www.stlmsd.com

November 30, 2008

Lisa Meyer
MALLINCKRODT
3600 North Second St.
St. Louis, MO 63147

Re: Wastewater User Charge Billing for Special Discharge

Dear Ms. Meyer:

This is to advise you of the wastewater user charges applicable to an on-site special discharge approved in our letter to you dated September 1, 2009, with a 30 day extension granted on October 6, 2009. You were advised of the extra-strength surcharges as part of the original approval letter. That charge was determined using the ethylene glycol concentration in your application for special discharge. The discharge date and quantity are from information submitted by you in a letter dated November 20, 2009.

Our Finance Department will bill you by invoice for the charges described below. These charges are based on the rates in MSD Wastewater User Charge Ordinance 12754. For your convenience, using the volume and strength of the waste discharged, the ordinance rates have been converted to a per-gallon basis.

PARTY TO BILL: Addressee

BILLING IS FOR: On-Site Special Discharge

DISCHARGE PERIOD: September 4 and October 7, 2009

SOURCE OF WASTE: 15% ethylene glycol solution at the Building 250 Mallinckrodt facility located at 3600 North Second Street, St. Louis, Missouri.

Discharge Period	Billing Item	Quantity	Units	Rate	Charge
9/4/09 & 10/7/09	Extra-Strength Surcharge	1,700	Gal	$0.17	$289.00
Totals:	------	1,700	Gal	-----	$289.00

Please do not pay until you receive our invoice. If you have any questions, please contact me at (314) 436-8755.

Sincerely,
METROPOLITAN ST. LOUIS SEWER DISTRICT

Steven M. Grace

Steve Grace
Environmental Assistant Engineer

bv

pc Toni McGarry - Finance Dept.
Nora Estopare

File: IU, MALLINCKRODT INC [2112059600], 3600 North Second Street, St. Louis, Missouri

COVIDIEN

NOVEMBER 20, 2009

Mr. Doug Mendoza
Metropolitan St. Louis Sewer District
Department of Environmental Compliance
10 East Grand Avenue
St. Louis, MO 63147-2913

RE: Follow-up to the Release of Chloroform from the Hazardous Waste Pad at the St. Louis Plant
PERMIT NO. 2112059600-2.1
NRC Case # 091113-1228-KAH

Dear Mr. Mendoza:

This letter is a follow-up to the November 16, 2009 notification of a release of chloroform (CAS #67-66-3) at the Covidien/Mallinckrodt St. Louis Plant as reported via voicemail message to you and the MSD Emergency Dispatch on November 16, 2009. The release was in excess of the chloroform reportable quantity (RQ) of 10 lbs. This material is listed as an Extremely Hazardous Substance.

At approximately 12:10 PM on November 16, 2009, a 55 gallon drum of hazardous waste (94% chloroform, 6% water) was speared by a fork truck while being loaded onto a trailer at the <90 day hazardous waste storage pad at the Mallinckrodt, St. Louis Plant. There was a release of approximately 53 gallons or 617 pounds of chloroform. Initially it was believed that the majority of the drum contents were isolated in the spill containment area for the loading dock. It was not until later when the emergency response crew was preparing to pump the containment contents into drums that it was discovered that the contents had been released to the sewer system which discharges to MSD. MSD was notified as soon as this information was obtained. The trailer loading area and containment system have just recently been placed into service and there was no visual open/close on the gate valve from the containment area. This has been addressed by locking the valve in the closed position and having the key only available to a supervisor to open.

RECEIVED
NOV 23 2009
DIVISION OF
ENVIRONMENTAL COMPLIANCE

COVIDIEN/MALLINCKRODT
3600 NORTH SECOND STREET
ST. LOUIS, MO 63147

TELEPHONE: 314-654-2000
FAX: 314-654-1251

Mallinckrodt, Inc. 21120596-00

COVIDIEN

Notifications of the RQ were also made to the St. Louis Fire Department, National Response Center, Missouri Emergency Response Commission / Missouri Department of Natural Resources and the Local Emergency Planning Commission. The St. Louis Fire Department responded to the plant to investigate.

There were no identified acute or chronic health risks associated with this incident.

An internal incident investigation is ongoing to determine root causes of the release.

If you have any questions or need additional information, please call me at 314.654.3374.

Sincerely,

Lisa Meyer
Senior HSE Engineer

RECEIVED

NOV 2 3 2009

DIVISION OF
ENVIRONMENTAL COMPLIANCE

COVIDIEN/MALLINCKRODT
3600 NORTH SECOND STREET
ST. LOUIS, MO 63147

TELEPHONE: 314-654-2000
FAX: 314-654-1251

COVIDIEN

RECEIVED

NOV 24 2009

DIVISION OF
ENVIRONMENTAL COMPLIANCE

NOVEMBER 20, 2009

Mr. Steve Grace
Metropolitan St. Louis Sewer District
Department of Environmental Compliance
10 East Grand Avenue
St. Louis, MO 63147-2913

RE: Special Discharge Follow-up - PERMIT NO. 2112059600-2.1

Dear Mr. Grace:

On September 1, 2009 an approval from MSD was received to discharge 1700 gallons of a 15% ethylene glycol and water solution from Building 250

On September 4, 2009 150 gallons were discharged. On October 6, 2009 after request, a special discharge extension was approved with an expiration of November 1, 2009.

On October 7, 2009 the remaining 1550 gallons was discharged.

If you have any questions or need additional information, please call me at 314.654.3374.

Sincerely,

Lisa Meyer

Lisa Meyer
Senior HSE Engineer

COVIDIEN/MALLINCKRODT
3600 NORTH SECOND STREET
ST. LOUIS, MO 63147

TELEPHONE: 314-654-2000
FAX: 314-654-1251

TO: Toni McGarry, Finance Department

FROM: Steven M. Grace, DEC

DATE: November 16, 2009

RE: **Wastewater User Charge Billing for Special Discharge**

Please bill, by invoice, the following charges applicable to an on-site special discharge approved in our letter dated October 30, 1998, as modified in letters dated November 20, 1998, July 19, 1999, March 28, 2001, October 13, 2004, June 19, 2006, and May 22, 2008. The discharge dates and quantity are from information submitted by Sharon Cotner, Corps of Engineers, in a letter dated October 20, 2009.

This charge is based on the rates in MSD Wastewater User Charge Ordinance 12754.

PARTY TO BILL: Kerry Wallace
The Shaw Group Inc.
1 Angelrodt Street
St. Louis, MO 63147

BILLING IS FOR: On-Site Special Discharge

DISCHARGE PERIOD: July through September 2009

SOURCE OF WASTE: Treated construction water from the St. Louis Downtown FUSRAP Site located at Mallinckrodt, Inc., 3600 N. Second Street, St. Louis, Missouri.

Discharge Period	Billing Item	Quantity	Units	Rate	Charge
8/10/09 - 9/16/09	Volume	113	CcF	$1.92	$216.96
Totals:	---	113	CcF	---	$216.96

If you have any questions, please call me on extension 8755.

bv

pc: Nora Estopare

File: IU, MALLINCKRODT INC [2112059600]

PIMS - Pretreatment Information Management System [PIMS St. Louis (PIMS)]

File Edit Records Worklists Reports/Letters Tools Window Help

Facility ID: 2112059600 | Name: MALLINCKRODT INC [2112059600] | SIU: ☑ | Class: Categorical Industrial User | All Facilities

General Info | Sample Points | Metering | Monitoring | Permits | Results | Compliance | Enforcement | Water Use | Spec Dischg

Results

Start Date: 01/01/2008 End Date: Apply

Events | Inspections | Sampling | Limit Comp | Violations | SMDE | Gen Rpts | **Notifications** | Surcharge | Surcharge Export

Notification Type	Date
Problem Discharge - 5 Day Written Follow Up	01/29/2009
Problem Discharge - Immediate Telephone No	01/26/2009
Problem Discharge - 5 Day Written Follow Up	01/02/2009
Problem Discharge - Immediate Telephone No	12/28/2008
Problem Discharge - 5 Day Written Follow Up	12/12/2008
Problem Discharge - Immediate Telephone No	12/10/2008
Problem Discharge - 5 Day Written Follow Up	11/19/2008
Problem Discharge - Immediate Telephone No	11/18/2008
Problem Discharge - Immediate Telephone No	11/12/2008
Problem Discharge - 5 Day Written Follow Up	11/05/2008
Problem Discharge - Immediate Telephone No	10/30/2008
Problem Discharge - 5 Day Written Follow Up	08/07/2008
Problem Discharge - Immediate Telephone No	08/01/2008
Problem Discharge - Immediate Telephone No	11/16/2009

Text

Lisa Meyer called at 3:45 pm and left a message - at 12:15 pm that day (11/16/09), a hazardous waste drum on the new hazardous waste pad was discovered to be leaking. The drum was 90 to 100% full of a chloroform/water mixture. The leak was going to the trench, which is to allow storm water to be released, and was believed to be valved closed at the time. Other environmental agencies were notified of the leak.

Mallinckrodt personnel had just discovered that the valve was open, meaning the material went to MSD sewers - so Lisa was calling us to notify us of the incident. She will be following with written notification and corrective action plan.

Ready | Nov 17, 2009 7:52:43 AM

Start | Inbox - Microsoft O... | Industry Files - Les... | Discontinue.doc - M... | PIMS - Pretreatmen... | 7:52 AM

SR
11-05

COVIDIEN

October 28, 2009

Mr. Doug Mendoza
Metropolitan St. Louis Sewer District
Department of Environmental Compliance
10 East Grand Avenue
St. Louis, MO 63147

Re: 2009 3rd Quarter Self-Monitoring Report for Permit No. 21120596-2.1

Dear Mr. Mendoza,

Please find enclosed the 2009 3rd Quarter Self Monitoring report for Mallinckrodt Inc.

The following sample points received no pharmaceutical process water flow during the third quarter: SP905, SP918, SP932 and SP935.

An unplanned power outage occurred on July 3, 2009 which resulted in wastewater overflows from SP008 and SP011. Wastewater sampling data and pH monitoring data is included in this report.

A planned electrical shutdown occurred from September 19-21, 2009 at the plant as was reported to you in a letter dated August 8, 2009. Wastewater overflows occurred at both SP008 and SP011 and monitoring data is attached in this report.

Similar to last quarter, regarding Special Certification and Reporting Requirements C.6., Certification of No Cyanide under 439, the plant has one drum of Cyanogen Bromide on site. This material is currently being stored in a raw material refrigerated storage area. The material was not used during this reporting period as the pharmaceutical process using this material did not begin until October. A Special Discharge request was received for the discharge of wastewater from this process on September 3 with a 30 day extension granted on October 7, 2009. Any wastewater generated from this process will be sampled for cyanide with results approved by MSD prior to the discharge to the plant's PEG treatment system.

OK

RECEIVED
OCT 29 2009
DIVISION OF
ENVIRONMENTAL COMPLIANCE

COVIDIEN/MALLINCKRODT
3600 NORTH SECOND STREET
ST. LOUIS, MO 63147

TELEPHONE: 314-654-2000
FAX: 314-654-1251

COVIDIEN

If you have any questions or require more detailed information, please contact me at 314.654.3374.

Sincerely,

Lisa Meyer
Senior HSE Engineer

ENCLOSURES

RECEIVED

OCT 29 2009

DIVISION OF
ENVIRONMENTAL COMPLIANCE

COVIDIEN/MALLINCKRODT
3600 NORTH SECOND STREET
ST. LOUIS, MO 63147

TELEPHONE: 314-654-2000
FAX: 314-654-1251

METROPOLITAN ST. LOUIS SEWER DISTRICT
INDUSTRIAL USER RADIOACTIVE MATERIALS DISCHARGE REPORT

PART I: IDENTIFYING INFORMATION

Company Name: Mallinckrodt - Covidien

Permit No: 21120596-00

Premise Address: 3600 N Second St. St. Louis, MO 63147

Reporting Period: ☐(JAN-MAR) ☐(APR-JUNE) ☒(JULY-SEPT) ☐(OCT-DEC)

PART II: RECORD OF DISPOSAL OF RADIOACTIVE MATERIALS TO THE SEWER SYSTEM

RADIONUCLIDE	ACTIVITY DISCHARGED (millicuries)
TOTAL ACTIVITY DISCHARGED:	0

PART III: CERTIFICATION STATEMENTS

Place your initials in the box under item A.
Everyone must complete the information under items A & B and sign this report.

(A.) CERTIFICATION OF COMPLIANCE WITH STATE AND FEDERAL REGULATIONS

[CB] I certify that to the best of my knowledge & belief, all requirements of 10 CFR Part 20.2003 and 19 CSR Part 20-10.090 governing disposal by release into sanitary sewage for material regulated by the Nuclear Regulatory Commission and the Missouri Department of Health, respectively, have been met for the period covered by this report.

B. RADIOACTIVE MATERIALS DISCHARGE REPORT CERTIFICATION

I certify under Penalty of Law that this document and all attachments were prepared under my direction or supervision in accordance with a system designed to assure that qualified personnel properly gather and evaluate the information submitted. Based on my inquiry of the person or persons who manage the system, or those persons directly responsible for gathering the information, the information submitted is, to the best of my knowledge and belief, true, accurate, and complete. I am aware that there are significant penalties for submitting false information, including the possibility of fine and imprisonment for knowing violations.

RECEIVED
OCT 29 2009
DIVISION OF
ENVIRONMENTAL COMPLIANCE

Print/type name of signing official: Richard C. Proehl

Title: Site Director Telephone: 314-654-5816.

Signature: Richard C Proehl Date: 10/28/09

radrpt.doc 2/00

PART III: SPECIAL CERTIFICATION STATEMENTS

Based on the special conditions contained in your discharge permit you may be required to certify the following. Please review your permit and **PLACE YOUR INITIALS ON THE LINES NEXT TO THE CERTIFICATIONS.**

(A)	NO CHANGE IN WASTEWATER DISCHARGE AT SAMPLE POINTS WITH NO MONITORING REQUIRED
	For permit special conditions that waive monitoring at any sample point(s) specified in your permit, you are required to make the following certification for each report in which monitoring is waived:
	RCP I certify, since the last discharge monitoring report, there has been no change in the character of the wastes discharged at sample point(s)_____
(B)	NO CHANGE IN WASTEWATER DISCHARGE AT ACTIVE CONNECTIONS WITHOUT SAMPLE POINTS
	For permit special conditions that waive monitoring at active connection points which are not specified as sample points in your permit, you are required to make the following certification:
	RCP I certify, since the last discharge monitoring report, there has been no change in the character of wastes discharged at those active connection points which are not specified in my permit.
D	GRAB IN LIEU OF COMPOSITE REPRESENTS WASTEWATER DISCHARGE
	For permit special conditions that authorize grab sample collection in lieu of composite sampling at any sample point(s), you are required to make the following certification for each report in which such authorized grab samples occur:
	_____ I certify the grab sample results in this report accurately represent our average daily discharge at sample point(s)_____.
(E)	NO DISCHARGE OF CATEGORICAL WASTE
	For permit special conditions that prohibit discharge of wastes which are subject to certain categorical pretreatment standards, you are required to make the following certification:
	RCP I certify, since the last discharge monitoring report, there has been no discharge of wastes which are subject to pretreatment standards in 40 CFR 414.
(F)	CYANIDE NOT USED OR GENERATED IN 40 CFR 439 OPERATIONS
	Discharges subject to Pharmaceutical Categorical Standards (40 CFR 439) can be exempted from limitations and monitoring for Total Cyanide at the Pharmaceutical sample point(s) _____ subject to the following certification:
	RCP I certify, since the last discharge monitoring report, cyanide has not been used or generated in any pharmaceutical manufacturing process subject to Categorical Standards in 40 CFR 439.* Except for cyanogen bromide stored in a raw material storage area.
H	PHARMACEUTICAL POLLUTANTS NOT USED OR GENERATED IN 40 CFR 439 OPERATIONS
	Discharges subject to Pharmaceutical Categorical Standards (40 CFR 439) can be exempted from monitoring for certain 40 CFR 439-regulated pollutants at the Pharmaceutical sample point(s) _____ subject to the following certification:
	_____ I certify, since the last discharge monitoring report, the 40 CFR 439-regulated pollutants, as determined in permittee's report dated _____ have not been used or generated in any pharmaceutical manufacturing process subject to Categorical Standards in 40 CFR 439. In addition, the above-referenced report remains valid.
I	SURROGATE MONITORING ALLOWED FOR 40 CFR 439 OPERATIONS
	Discharges subject to Pharmaceutical Categorical Standards (40 CFR 439) can be exempted from monitoring for certain 40 CFR 439-regulated pollutants, and replaced by monitoring for surrogate pollutant(s), at the Pharmaceutical sample point(s) _____ subject to the following certification:
	_____ I certify, since the last discharge monitoring report, the 40 CFR 439-regulated pollutants, as determined in permittee's report dated _____ continue to receive the same degree of treatment as the surrogate pollutant(s). In addition, the above-referenced report remains valid.

PART IV: GENERAL CERTIFICATION STATEMENTS

B	DISCHARGE MONITORING REPORT CERTIFICATION
	All permittees must sign and complete the information below:
	I certify under penalty of Law that this document and all attachments were prepared under my direction or supervision in accordance with a system designed to assure that qualified personnel properly gather and evaluate the information submitted. Based on my inquiry of the person or persons who manage the system, or those persons directly responsible for gathering the information, the information submitted is, to the best of my knowledge and belief, true, accurate, and complete. I am aware that there are significant penalties for submitting false information, including the possibility of fine and imprisonment for knowing violations.
	Print or type name of signing official: Richard C. Proehl
	Title: Site Director Telephone: 314.654.5816
	Signature: Richard C. Proehl Date: 10/28/09

RECEIVED
OCT 29 2009
DIVISION OF ENVIRONMENTAL COMPLIANCE

METROPOLITAN ST. LOUIS SEWER DISTRICT
2009 INDUSTRIAL USER SELF MONITORING REPORT

PLEASE READ THE INSTRUCTIONS BEFORE COMPLETING THIS REPORT

PART I: IDENTIFYING INFORMATION

Company Name: Mallinckrodt Inc.

Permit No.: 2112059600 - 2.1

Premise Address: 3600 North Second St., St. Louis, MO 63147

Monitoring Period: _____(JAN-MAR) ____(APR-JUNE) __X__(JULY-SEPT) _____(OCT-DEC)

Samples Collected By: Mallinckrodt Inc

Analysis Performed By:

Part II: ANALYTICAL RESULTS OF SELF MONITORING

MSD SAMPLE POINT REFERENCE NUMBERS	----->		001					
DATES ON WHICH SAMPLES WERE COLLECTED	----->		NA					
TIMES AT WHICH SAMPLES WERE COLLECTED	----->							
PARAMETER	LIMIT	RECORD SAMPLE TYPES (G,C,M OR E) & RESULTS BELOW G=grab,C=composite,M=measured flow,E=estimated flow						UNITS
FLOW		E	1,000					gal/day
NO MONITORING REQUIRED (Sanitary Only)								
There have been no change in the character of the wastes discharged since the last report.								

RECEIVED
OCT 29 2009
DIVISION OF
ENVIRONMENTAL COMPLIANCE

METROPOLITAN ST. LOUIS SEWER DISTRICT
2009 INDUSTRIAL USER SELF MONITORING REPORT

PLEASE READ THE INSTRUCTIONS BEFORE COMPLETING THIS REPORT

PART I: IDENTIFYING INFORMATION

Company Name: Mallinckrodt Inc.

Permit No.: 2112059600 - 2.1

Premise Address: 3600 North Second St., St. Louis, MO 63147

Monitoring Period: _____(JAN-MAR) ____(APR-JUNE) __X__(JULY-SEPT) ____(OCT-DEC)

Samples Collected By: Mallinckrodt Inc

Analysis Performed By: _____

Part II: ANALYTICAL RESULTS OF SELF MONITORING

MSD SAMPLE POINT REFERENCE NUMBERS		----->		002					
DATES ON WHICH SAMPLES WERE COLLECTED		----->		NA					
TIMES AT WHICH SAMPLES WERE COLLECTED		----->							
PARAMETER		LIMIT	RECORD SAMPLE TYPES (G,C,M OR E) & RESULTS BELOW G=grab,C=composite,M=measured flow,E=estimated flow						UNITS
FLOW			E	2,200					gal/day
NO MONITORING REQUIRED (Sanitary Only)									
There have been no change in the character of the wastes discharged since the last report.									

RECEIVED
OCT 29 2009
DIVISION OF
ENVIRONMENTAL COMPLIANCE

METROPOLITAN ST. LOUIS SEWER DISTRICT
2009 INDUSTRIAL USER SELF MONITORING REPORT

PLEASE READ THE INSTRUCTIONS BEFORE COMPLETING THIS REPORT

PART I: IDENTIFYING INFORMATION

Company Name: Mallinckrodt Inc.

Permit No.: 2112059600 - 2.1

Premise Address: 3600 North Second St., St. Louis, MO 63147

Monitoring Period: ____(JAN-MAR) ____(APR-JUNE) __X__(JULY-SEPT) _____(OCT-DEC)

Samples Collected By: Mallinckrodt

Analysis Performed By: TEKLAB

Part II: ANALYTICAL RESULTS OF SELF MONITORING

MSD SAMPLE POINT REFERENCE NUMBERS	----->	003		009		099		
DATES ON WHICH SAMPLES WERE COLLECTED	----->	7/9/2009		7/9/2009		calculated		
TIMES AT WHICH SAMPLES WERE COLLECTED	----->	07:15, 08:20, 09:20, 10:25		07:45, 08:45, 9:45, 10:45		n/a		
PARAMETER	LIMIT	RECORD SAMPLE TYPES (G,C,M OR E) & RESULTS BELOW G=grab,C=composite,M=measured flow,E=estimated flow						UNITS
FLOW		M	21,254	M	18,835	E	2,419	gal/day
Oil & Grease	200	G	4	G	14	E	0*	mg/l
Biochemical Oxygen Demand	****	C	86	C	59	E	296	mg/l
Chemical Oxygen Demand	****	C	829	C	924	E	89	mg/l
Total Suspended Solids	****	C	40	C	28	E	133	mg/l
Temperature	60	G	29	G	22	E	25	deg C
pH	5.5 - 11.5	G	7.2	G	7.3	E	7.2	S.U.
Lab Dilution Factor			1		1			

RECEIVED

OCT 29 2009

DIVISION OF
ENVIRONMENTAL COMPLIANCE

METROPOLITAN ST. LOUIS SEWER DISTRICT
2009 INDUSTRIAL USER SELF MONITORING REPORT

PLEASE READ THE INSTRUCTIONS BEFORE COMPLETING THIS REPORT

PART I: IDENTIFYING INFORMATION

Company Name: Mallinckrodt Inc.

Permit No.: 2112059600 - 2.1

Premise Address: 3600 North Second St., St. Louis, MO 63147

Monitoring Period: _____(JAN-MAR) ____(APR-JUNE) __X__(JULY-SEPT) ____(OCT-DEC)

Samples Collected By: Mallinckrodt

Analysis Performed By: TEKLAB

Part II: ANALYTICAL RESULTS OF SELF MONITORING

MSD SAMPLE POINT REFERENCE NUMBERS	----->		005						
DATES ON WHICH SAMPLES WERE COLLECTED	----->		7/9/2009						
TIMES AT WHICH SAMPLES WERE COLLECTED	----->		07:26, 8:30, 09:30, 10:25						
PARAMETER	LIMIT	RECORD SAMPLE TYPES (G,C,M OR E) & RESULTS BELOW G=grab,C=composite,M=measured flow,E=estimated flow							UNITS
FLOW		E	32,000						gal/day
Oil & Grease	200	G	2						mg/l
Biochemical Oxygen Demand	****	C	268						mg/l
Chemical Oxygen Demand	****	C	365						mg/l
Total Suspended Solids	****	C	<6						mg/l
Temperature	60	G	28						deg C
pH	5.5 - 11.5	G	7.4						S.U.
Lab Dilution Factor			1						

OCT 29 2009

DIVISION OF
ENVIRONMENTAL COMPLIANCE

METROPOLITAN ST. LOUIS SEWER DISTRICT
2009 INDUSTRIAL USER SELF MONITORING REPORT

PLEASE READ THE INSTRUCTIONS BEFORE COMPLETING THIS REPORT

PART I: IDENTIFYING INFORMATION

Company Name: Mallinckrodt Inc.

Permit No.: 2112059600 - 2.1

Premise Address: 3600 North Second St., St. Louis, MO 63147

Monitoring Period: ____(JAN-MAR) ____(APR-JUNE) __X__(JULY-SEPT) ____(OCT-DEC)

Samples Collected By: Mallinckrodt

Analysis Performed By: TEKLAB

Part II: ANALYTICAL RESULTS OF SELF MONITORING

MSD SAMPLE POINT REFERENCE NUMBERS	----->		008		008			
DATES ON WHICH SAMPLES WERE COLLECTED	----->		7/3/2009		9/19/2009			
TIMES AT WHICH SAMPLES WERE COLLECTED	----->		2:30		10:00			
PARAMETER	LIMIT	RECORD SAMPLE TYPES (G,C,M OR E) & RESULTS BELOW G=grab,C=composite,M=measured flow,E=estimated flow						UNITS
FLOW		E	130,000	E	130,000			gal/day
Oil & Grease	200	G	7	G	6			mg/l
Biochemical Oxygen Demand	****	G	<5	G	14			mg/l
Chemical Oxygen Demand	****	G	<50	G	53			mg/l
Temperature	60	G	33	G	26			deg C
Total Suspended Solids	****	G	6	G	7			mg/L
pH	5.5 - 11.5	G	8.8	G	8.6			S.U.
Lab Dilution Factor			1		1			

RECEIVED

OCT 29 2009

DIVISION OF
ENVIRONMENTAL COMPLIANCE

METROPOLITAN ST. LOUIS SEWER DISTRICT
2009 INDUSTRIAL USER SELF MONITORING REPORT

PLEASE READ THE INSTRUCTIONS BEFORE COMPLETING THIS REPORT

PART I: IDENTIFYING INFORMATION

Company Name: Mallinckrodt Inc.

Permit No.: 2112059600 - 2.1

Premise Address: 3600 North Second St., St. Louis, MO 63147

Monitoring Period: ____(JAN-MAR) ____(APR-JUNE) _X__(JULY-SEPT) ____(OCT-DEC)

Samples Collected By: Mallinckrodt

Analysis Performed By: TEKLAB

Part II: ANALYTICAL RESULTS OF SELF MONITORING

MSD SAMPLE POINT REFERENCE NUMBERS	----->		008		008			
DATES ON WHICH SAMPLES WERE COLLECTED	----->		7/3/2009		9/19/2009			
TIMES AT WHICH SAMPLES WERE COLLECTED	----->		2:30		10:00			
PARAMETER	LIMIT	RECORD SAMPLE TYPES (G,C,M OR E) & RESULTS BELOW G=grab,C=composite,M=measured flow,E=estimated flow						UNITS
FLOW		E	130,000	E	130,000			gal/day
1,1,1-Trichloroethane		G	<0.005	G	<0.005			mg/l
1,1,2,2-Tetrachloroethane		G	<0.005	G	<0.005			mg/l
1,1,2-Trichloroethane		G	<0.005	G	<0.005			mg/l
1,1-Dichloroethane		G	<0.005	G	<0.005			mg/l
1,1-Dichloroethene		G	<0.005	G	<0.005			mg/l
1,2-Dichlorobenzene		G	<0.005	G	<0.005			mg/l
1,2-Dichloroethane		G	<0.005	G	<0.005			mg/l
1,2-Dichloropropane		G	<0.005	G	<0.005			mg/l
1,3-Dichlorobenzene		G	<0.005	G	<0.005			mg/l
1,4-Dichlorobenzene		G	<0.005	G	<0.005			mg/l
2-Chloroethylvinylether		G	<0.020	G	<0.020			mg/l
Acrolein		G	<0.100	G	<0.100			mg/l
Acrylonitrile		G	<0.005	G	<0.005			mg/l
Benzene		G	<0.002	G	<0.002			mg/l
Bromodichloromethane		G	0.0011	G	0.0013			mg/l
Bromoform		G	<0.005	G	<0.005			mg/l
Bromomethane		G	<0.010	G	<0.010			mg/l
Carbon Tetrachloride		G	<0.005	G	<0.005			mg/l
Chlorobenzene		G	<0.005	G	0.0012			mg/l
Chloroethane		G	<0.010	G	<0.010			mg/l
Chloroform		G	0.0061	G	0.0100			mg/l
Chloromethane		G	<0.010	G	<0.010			mg/l
cis-1,3-Dicholropropene		G	<0.005	G	<0.005			mg/l
Dibromochloromethane		G	<0.005	G	<0.005			mg/l
Ethylbenzene		G	<0.005	G	<0.005			mg/l
Methylene Chloride		G	<0.005	G	<0.005			mg/l
Tetrachloroethene		G	<0.005	G	<0.005			mg/l
Toluene		G	<0.002	G	<0.002			mg/l
1,2-Dichloroethene		G	<0.005	G	<0.005			mg/l
trans-1,3-Dichloropropene		G	<0.005	G	<0.005			mg/l
Trichloroethene		G	<0.005	G	<0.005			mg/l
Vinyl Chloride		G	<0.002	G	<0.002			mg/l
1,2,4-Trichlorobenzene		G	<0.017	G	<0.009			mg/l
2,4,6-Trichlorophenol		G	<0.017	G	<0.009			mg/l
2,4-Dichlorophenol		G	<0.017	G	<0.009			mg/l
2,4-Dimethylphenol		G	<0.017	G	<0.009			mg/l
2,4-Dinitrophenol		G	<0.033	G	<0.017			mg/l
2,4-Dinitrotoluene		G	<0.017	G	<0.009			mg/l
2,6-Dinitrotoluene		G	<0.017	G	<0.009			mg/l
2-Chloronapthalene		G	<0.017	G	<0.009			mg/l
2-Chlorophenol		G	<0.017	G	<0.009			mg/l
2-Nitrophenol		G	<0.033	G	<0.017			mg/l
3,3-Dichlorobenzidine		G	<0.017	G	<0.009			mg/l
2-Methyl-4,6-dinitrophenol		G	<0.033	G	<0.017			mg/l
4-Bromophenyl-phenylether		G	<0.017	G	<0.009			mg/l
4-Chloro-3-methylphenol		G	<0.033	G	<0.017			mg/l
4-Chlorophenyl-phenylether		G	<0.017	G	<0.009			mg/l
4-Nitrophenol		G	<0.033	G	<0.017			mg/l
Acenapthene		G	<0.017	G	<0.009			mg/l
Acenaphthylene		G	<0.017	G	<0.009			mg/l
Anthracene		G	<0.017	G	<0.009			mg/l
Benzidine		G	<0.067	G	<0.034			mg/l
Benzo(a)anthracene		G	<0.017	G	<0.009			mg/l

RECEIVED
OCT 29 2009
DIVISION OF
ENVIRONMENTAL COMPLIANCE

METROPOLITAN ST. LOUIS SEWER DISTRICT
2009 INDUSTRIAL USER SELF MONITORING REPORT

PLEASE READ THE INSTRUCTIONS BEFORE COMPLETING THIS REPORT

PART I: IDENTIFYING INFORMATION

Company Name: Mallinckrodt Inc.

Permit No.: 2112059600 - 2.1

Premise Address: 3600 North Second St., St. Louis, MO 63147

Monitoring Period: ____(JAN-MAR) ____(APR-JUNE) _X__(JULY-SEPT) ____(OCT-DEC)

Samples Collected By: Mallinckrodt

Analysis Performed By: TEKLAB

Part II: ANALYTICAL RESULTS OF SELF MONITORING

MSD SAMPLE POINT REFERENCE NUMBERS	----->	008		008				
DATES ON WHICH SAMPLES WERE COLLECTED	----->	7/3/2009		9/19/2009				
TIMES AT WHICH SAMPLES WERE COLLECTED	----->	2:30		10:00				
PARAMETER	LIMIT	RECORD SAMPLE TYPES (G,C,M OR E) & RESULTS BELOW G=grab,C=composite,M=measured flow,E=estimated flow						UNITS
FLOW		E	130,000	E	130,000			gal/day
Benzo(a)pyrene		G	<0.017	G	<0.009			mg/l
Benzo(b)fluoranthene		G	<0.017	G	<0.009			mg/l
Benzo(g,h,i)perylene		G	<0.017	G	<0.009			mg/l
Benzo(k)fluoranthene		G	<0.017	G	<0.009			mg/l
Bis(2-chloroethoxy)methane		G	<0.017	G	<0.009			mg/l
Bis(2-chloroethyl)ether		G	<0.017	G	<0.009			mg/l
Bis(2-chloroisopropyl)ether		G	<0.017	G	<0.009			mg/l
Bis(2-ethylhexyl)phthalate		G	<0.010	G	<0.005			mg/l
Butyl benzyl phthalate		G	<0.017	G	<0.009			mg/l
Chrysene		G	<0.017	G	<0.009			mg/l
Dibenzo(a,h)anthracene		G	<0.017	G	<0.009			mg/l
Diethyl phthalate		G	<0.017	G	<0.009			mg/l
Dimethyl phthalate		G	<0.017	G	<0.009			mg/l
Di-n-butyl phthalate		G	<0.017	G	<0.009			mg/l
Di-n-octyl-phthalate		G	<0.017	G	<0.009			mg/l
Fluorene		G	<0.017	G	<0.009			mg/l
Fluoranthene		G	<0.017	G	<0.009			mg/l
Hexachlorobenzene		G	<0.017	G	<0.009			mg/l
Hexachlorobutadiene		G	<0.017	G	<0.009			mg/l
Hexachlorocyclopentadiene		G	<0.033	G	<0.017			mg/l
Hexachloroethane		G	<0.017	G	<0.009			mg/l
Ideno(1,2,3-cd)pyrene		G	<0.017	G	<0.009			mg/l
Isophorone		G	<0.017	G	<0.009			mg/l
Naphthalene		G	<0.017	G	<0.009			mg/l
Nitrobenzene		G	<0.017	G	<0.009			mg/l
N-nitrosodimethylamine		G	<0.033	G	<0.017			mg/l
N-nitrosodi-n-propylamine		G	<0.017	G	<0.009			mg/l
N-nitrosodiphenylamine		G	<0.017	G	<0.009			mg/l
Pentachlorophenol		G	<0.033	G	<0.017			mg/l
Phenanthrene		G	<0.017	G	<0.009			mg/l
Phenol		G	<0.008	G	<0.004			mg/l
Pyrene		G	<0.017	G	<0.009			mg/l
1,2-Diphenylhydrazine		G	<0.017	G	<0.009			mg/l
Total Toxic Organics	5.52	--	1.353		0.843			mg/l
Lab Dilution Factor			1		1			

RECEIVED
OCT 29 2009
DIVISION OF
ENVIRONMENTAL COMPLIANCE

MSD 012003

Mallinckrodt pH Monitoring Data for SP008: Power Outage Overflow July 3, 2009		
Date	**Time**	**pH**
3-Jul-09	2:30:00	8.8
3-Jul-09	3:00:00	8.4
3-Jul-09	3:30:00	8.3
3-Jul-09	4:00:00	8.3
3-Jul-09	4:30:00	7.9
3-Jul-09	5:00:00	7.5
3-Jul-09	5:30:00	7.3
Mallinckrodt pH Monitoring Data for SP011: Power Outage Overflow July 3, 2009		
Date	**Time**	**pH**
3-Jul-09	2:30:00	8.2
3-Jul-09	3:00:00	8.3
3-Jul-09	3:30:00	7.7
3-Jul-09	4:00:00	7.9
3-Jul-09	4:30:00	8.4
3-Jul-09	5:00:00	8.3
3-Jul-09	5:30:00	8.0

RECEIVED

OCT 29 2009

DIVISION OF
ENVIRONMENTAL COMPLIANCE

Mallinckrodt pH Monitoring Data for SP008: Planned Electrical Shutdown Overflow September 19, 2009 - September 21, 2009		
Date	Time	pH
19-Sep-09	10:00:00	8.63
19-Sep-09	10:30:00	8.67
19-Sep-09	11:00:00	8.79
19-Sep-09	11:30:00	8.95
19-Sep-09	12:00:00	9.05
19-Sep-09	12:30:00	9.28
19-Sep-09	13:00:00	9.18
19-Sep-09	13:30:00	9.18
19-Sep-09	14:00:00	9.17
19-Sep-09	14:30:00	9.24
19-Sep-09	15:00:00	9.00
19-Sep-09	15:30:00	9.35
19-Sep-09	16:00:00	9.34
19-Sep-09	16:30:00	9.34
19-Sep-09	17:00:00	9.34
19-Sep-09	17:30:00	9.33
19-Sep-09	18:00:00	9.33
19-Sep-09	18:30:00	9.33
19-Sep-09	19:00:00	9.33
19-Sep-09	19:30:00	9.33
19-Sep-09	20:00:00	9.35
19-Sep-09	20:30:00	9.33
19-Sep-09	21:00:00	9.31
19-Sep-09	21:30:00	9.31
19-Sep-09	22:00:00	9.16
19-Sep-09	22:30:00	8.92
19-Sep-09	23:00:00	8.62
19-Sep-09	23:30:00	8.34
20-Sep-09	0:00:00	8.31
20-Sep-09	0:30:00	8.38
20-Sep-09	1:00:00	8.36
20-Sep-09	1:30:00	8.43
20-Sep-09	2:00:00	8.48
20-Sep-09	2:30:00	8.49
20-Sep-09	3:00:00	8.48
20-Sep-09	3:30:00	8.63
20-Sep-09	4:00:00	8.64
20-Sep-09	4:30:00	8.73
20-Sep-09	5:00:00	8.76
20-Sep-09	5:30:00	8.79
20-Sep-09	6:00:00	8.80
20-Sep-09	6:30:00	8.84
20-Sep-09	7:00:00	8.79
20-Sep-09	7:30:00	8.88
20-Sep-09	8:00:00	8.03

RECEIVED
OCT 29 2009
DIVISION OF
ENVIRONMENTAL COMPLIANCE

20-Sep-09	8:30:00	7.25
20-Sep-09	9:00:00	7.31
20-Sep-09	9:30:00	7.78
20-Sep-09	10:00:00	8.54
20-Sep-09	10:30:00	7.95
20-Sep-09	11:00:00	8.35
20-Sep-09	11:30:00	8.82
20-Sep-09	12:00:00	8.92
20-Sep-09	12:30:00	8.81
20-Sep-09	13:00:00	8.80
20-Sep-09	13:30:00	8.88
20-Sep-09	14:00:00	8.93
20-Sep-09	14:30:00	8.94
20-Sep-09	15:00:00	10.32
20-Sep-09	15:30:00	9.50
20-Sep-09	16:00:00	9.18
20-Sep-09	16:30:00	9.06
20-Sep-09	17:00:00	9.03
20-Sep-09	17:30:00	9.00
20-Sep-09	18:00:00	8.96
20-Sep-09	18:30:00	8.94
20-Sep-09	19:00:00	8.93
20-Sep-09	19:30:00	8.96
20-Sep-09	20:00:00	8.96
20-Sep-09	20:30:00	8.98
20-Sep-09	21:00:00	8.99
20-Sep-09	21:30:00	9.00
20-Sep-09	22:00:00	9.00
20-Sep-09	22:30:00	9.00
20-Sep-09	23:00:00	9.00
20-Sep-09	23:30:00	8.99
21-Sep-09	0:00:00	8.98
21-Sep-09	0:30:00	9.01
21-Sep-09	1:00:00	9.00
21-Sep-09	1:30:00	8.90
21-Sep-09	2:00:00	8.30
21-Sep-09	2:30:00	8.14
21-Sep-09	3:00:00	8.49
21-Sep-09	3:30:00	8.50
21-Sep-09	4:00:00	8.36
21-Sep-09	4:30:00	8.28
21-Sep-09	5:00:00	8.28
21-Sep-09	5:30:00	8.20

RECEIVED

OCT 29 2009

DIVISION OF
ENVIRONMENTAL COMPLIANCE

METROPOLITAN ST. LOUIS SEWER DISTRICT
2009 INDUSTRIAL USER SELF MONITORING REPORT

PLEASE READ THE INSTRUCTIONS BEFORE COMPLETING THIS REPORT

PART I: IDENTIFYING INFORMATION

Company Name: Mallinckrodt Inc.

Permit No.: 2112059600 -2.1

Premise Address: 3600 North Second St., St. Louis, MO 63147

Monitoring Period: _____(JAN-MAR) ____(APR-JUNE) __X__(JULY-SEPT) _____(OCT-DEC)

Samples Collected By: Mallinckrodt

Analysis Performed By: TEKLAB

Part II: ANALYTICAL RESULTS OF SELF MONITORING

MSD SAMPLE POINT REFERENCE NUMBERS	----->		010					
DATES ON WHICH SAMPLES WERE COLLECTED	----->		7/9/2009					
TIMES AT WHICH SAMPLES WERE COLLECTED	----->		07:55, 08:55, 9:55, 10:55					
PARAMETER	LIMIT	RECORD SAMPLE TYPES (G,C,M OR E) & RESULTS BELOW G=grab,C=composite,M=measured flow,E=estimated flow						UNITS
FLOW		E	1,860,482					gal/day
Oil & Grease	200	G	2					mg/l
Biochemical Oxygen Demand	****	C	450					mg/l
Chemical Oxygen Demand	****	C	1180					mg/l
Total Suspended Solids	****	C	33					mg/l
Temperature	60	G	40					deg C
pH	5.5 - 11.5	G	see attached					S.U.
Chromium	5	C	0.007					mg/l
Copper	2.7	C	0.019					mg/l
Nickel	2.3	C	0.016					mg/l
Zinc	3	C	0.029					mg/l
Lab Dilution Factor			1					

RECEIVED
OCT 29 2009
DIVISION OF
ENVIRONMENTAL COMPLIANCE

Mallinckrodt pH Monitoring for SP010: July, 2009

Date / Time	pH	Total for Event in Minutes
02-Jul-09 08:20:00	3.7	5
10-Jul-09 13:10:00	5.3	5
24-Jul-09 13:30:00	5.1	5
	July Total	**15**

Mallinckrodt pH Monitoring for SP010: August, 2009

Date / Time	pH	Total for Event in Minutes
07-Aug-09 10:55:00	4.9	5
16-Aug-09 08:05:00	2.5	
16-Aug-09 08:10:00	1.6	
16-Aug-09 08:15:00	1.7	
16-Aug-09 08:20:00	1.5	
16-Aug-09 08:25:00	1.9	
16-Aug-09 08:30:00	4.6	30
21-Aug-09 08:45:00	4.2	5
21-Aug-09 09:15:00	4.7	
21-Aug-09 09:20:00	3.9	
21-Aug-09 09:25:00	4.3	
21-Aug-09 09:30:00	4.8	20
28-Aug-09 13:30:00	3.9	5
28-Aug-09 13:35:00	4.5	10
	August Total:	**75**

RECEIVED

OCT 29 2009

DIVISION OF
ENVIRONMENTAL COMPLIANCE

Mallinckrodt pH Monitoring for SP010: Septmber, 2009

Date / Time	pH	Total for Event in Minutes
03-Sep-09 18:15:00	4.9	
03-Sep-09 18:20:00	4.1	
03-Sep-09 18:25:00	3.7	
03-Sep-09 18:30:00	3.6	
03-Sep-09 18:35:00	3.5	
03-Sep-09 18:40:00	3.5	
03-Sep-09 18:45:00	3.4	
03-Sep-09 18:50:00	3.3	
03-Sep-09 18:55:00	3.3	
03-Sep-09 19:00:00	3.4	45
04-Sep-09 14:50:00	4.2	5
09-Sep-09 10:00:00	4.9	5
12-Sep-09 04:00:00	5.4	5
18-Sep-09 14:00:00	4.9	5
25-Sep-09 18:50:00	11.7	5
25-Sep-09 23:45:00	5.3	5
26-Sep-09 07:35:00	12.0	
26-Sep-09 07:40:00	12.1	
26-Sep-09 07:45:00	12.0	
26-Sep-09 07:50:00	11.9	
26-Sep-09 07:55:00	12.0	
26-Sep-09 08:00:00	12.1	
26-Sep-09 08:05:00	12.1	35
26-Sep-09 08:20:00	12.5	5
26-Sep-09 12:45:00	4.9	5
26-Sep-09 13:25:00	11.9	5
26-Sep-09 18:40:00	11.8	
26-Sep-09 18:45:00	11.6	10
26-Sep-09 19:50:00	11.7	5
26-Sep-09 23:50:00	11.6	5
27-Sep-09 01:10:00	3.5	5
27-Sep-09 01:20:00	5.1	5
27-Sep-09 15:45:00	5.3	
27-Sep-09 15:50:00	1.9	
27-Sep-09 15:55:00	5.4	15
	September Total:	**170**

RECEIVED
OCT 29 2009
DIVISION OF
ENVIRONMENTAL COMPLIANCE

METROPOLITAN ST. LOUIS SEWER DISTRICT
2009 INDUSTRIAL USER SELF MONITORING REPORT

PLEASE READ THE INSTRUCTIONS BEFORE COMPLETING THIS REPORT

PART I: IDENTIFYING INFORMATION

Company Name: Mallinckrodt Inc.

Permit No.: 2112059600 - 2.1

Premise Address: 3600 North Second St., St. Louis, MO 63147

Monitoring Period: ____(JAN-MAR) ____(APR-JUNE) __X__(JULY-SEPT) ____(OCT-DEC)

Samples Collected By: Mallinckrodt

Analysis Performed By: TEKLAB

Part II: ANALYTICAL RESULTS OF SELF MONITORING

MSD SAMPLE POINT REFERENCE NUMBERS	----->		011		011			
DATES ON WHICH SAMPLES WERE COLLECTED	----->		7/3/2009		9/19/2009			
TIMES AT WHICH SAMPLES WERE COLLECTED	----->		2:30		10:00			
PARAMETER	LIMIT	RECORD SAMPLE TYPES (G,C,M OR E) & RESULTS BELOW G=grab,C=composite,M=measured flow,E=estimated flow						UNITS
FLOW		E	14,000	E	14,000			gal/day
Oil & Grease	200	G	7	G	2			mg/l
Biochemical Oxygen Demand	****	G	<5	G	14			mg/l
Chemical Oxygen Demand	****	G	<50	G	23			mg/l
Total Suspended Solids	****	G	5	G	7			mg/l
Temperature	60	G	27.0	G	24.4			deg C
pH	5.5 - 11.5	G	8.2	G	8.2			S.U.
Lab Dilution Factor			1		1			

RECEIVED
OCT 29 2009
DIVISION OF
ENVIRONMENTAL COMPLIANCE

METROPOLITAN ST. LOUIS SEWER DISTRICT
2009 INDUSTRIAL USER SELF MONITORING REPORT

PLEASE READ THE INSTRUCTIONS BEFORE COMPLETING THIS REPORT

PART I: IDENTIFYING INFORMATION

Company Name: Mallinckrodt Inc.

Permit No.: 2112059600 - 2.1

Premise Address: 3600 North Second St., St. Louis, MO 63147

Monitoring Period: ____(JAN-MAR) _____(APR-JUNE) __X_(JULY-SEPT) ____(OCT-DEC)

Samples Collected By: Mallinckrodt

Analysis Performed By: TEKLAB

Part II: ANALYTICAL RESULTS OF SELF MONITORING

MSD SAMPLE POINT REFERENCE NUMBERS	---->	011		011				
DATES ON WHICH SAMPLES WERE COLLECTED	---->	7/3/2009		9/19/2009				
TIMES AT WHICH SAMPLES WERE COLLECTED	---->	2:30		10:00				
PARAMETER	LIMIT	RECORD SAMPLE TYPES (G,C,M OR E) & RESULTS BELOW G=grab,C=composite,M=measured flow,E=estimated flow						UNITS
FLOW		E	14,000	E	14,000			gal/day
1,1,1-Trichloroethane		G	<0.005	G	<0.005			mg/l
1,1,2,2-Tetrachloroethane		G	<0.005	G	<0.005			mg/l
1,1,2-Trichloroethane		G	<0.005	G	<0.005			mg/l
1,1-Dichloroethane		G	<0.005	G	<0.005			mg/l
1,1-Dichloroethene		G	<0.005	G	<0.005			mg/l
1,2-Dichlorobenzene		G	<0.005	G	<0.005			mg/l
1,2-Dichloroethane		G	<0.005	G	<0.005			mg/l
1,2-Dichloropropane		G	<0.005	G	<0.005			mg/l
1,3-Dichlorobenzene		G	<0.005	G	<0.005			mg/l
1,4-Dichlorobenzene		G	<0.005	G	<0.005			mg/l
2-Chloroethylvinylether		G	<0.020	G	<0.020			mg/l
Acrolein		G	<0.100	G	<0.100			mg/l
Acrylonitrile		G	<0.005	G	<0.005			mg/l
Benzene		G	<0.002	G	<0.002			mg/l
Bromodichloromethane		G	0.0014	G	<0.005			mg/l
Bromoform		G	0.0016	G	<0.005			mg/l
Bromomethane		G	<0.010	G	<0.010			mg/l
Carbon Tetrachloride		G	<0.005	G	<0.005			mg/l
Chlorobenzene		G	<0.005	G	<0.005			mg/l
Chloroethane		G	<0.010	G	<0.010			mg/l
Chloroform		G	0.0083	G	0.0023			mg/l
Chloromethane		G	<0.010	G	<0.010			mg/l
cis-1,3-Dicholropropene		G	<0.005	G	<0.005			mg/l
Dibromochloromethane		G	<0.005	G	<0.005			mg/l
Ethylbenzene		G	<0.005	G	<0.005			mg/l
Methylene Chloride		G	<0.005	G	<0.005			mg/l
Tetrachloroethene		G	<0.005	G	<0.005			mg/l
Toluene		G	<0.002	G	<0.002			mg/l
trans-1,2-Dichloroethene		G	<0.005	G	<0.005			mg/l
trans-1,3-Dichloropropene		G	<0.005	G	<0.005			mg/l
Trichloroethene		G	<0.005	G	<0.005			mg/l
Vinyl Chloride		G	<0.002	G	<0.002			mg/l
1,2,4-Trichlorobenzene		G	<0.016	G	<0.008			mg/l
2,4,6-Trichlorophenol		G	<0.016	G	<0.008			mg/l
2,4-Dichlorophenol		G	<0.016	G	<0.008			mg/l
2,4-Dimethylphenol		G	<0.016	G	<0.008			mg/l
2,4-Dinitrophenol		G	<0.033	G	<0.016			mg/l
2,4-Dinitrotoluene		G	<0.016	G	<0.008			mg/l
2,6-Dinitrotoluene		G	<0.016	G	<0.008			mg/l
2-Chloronapthalene		G	<0.016	G	<0.008			mg/l
2-Chlorophenol		G	<0.016	G	<0.008			mg/l
2-Nitrophenol		G	<0.033	G	<0.016			mg/l
3,3-Dichlorobenzidine		G	<0.016	G	<0.008			mg/l
2-Methyl-4,6-dinitrophenol		G	<0.033	G	<0.016			mg/l
4-Bromophenyl-phenylether		G	<0.016	G	<0.008			mg/l
4-Chloro-3-methylphenol		G	<0.033	G	<0.016			mg/l
4-Chlorophenyl-phenylether		G	<0.016	G	<0.008			mg/l
4-Nitrophenol		G	<0.033	G	<0.016			mg/l
Acenapthene		G	<0.016	G	<0.008			mg/l
Acenaphthylene		G	<0.016	G	<0.008			mg/l
Anthracene		G	<0.016	G	<0.008			mg/l
Benzidine		G	<0.032	G	<0.033			mg/l

RECEIVED
OCT 29 2009
DIVISION OF
ENVIRONMENTAL COMPLIANCE

METROPOLITAN ST. LOUIS SEWER DISTRICT
2009 INDUSTRIAL USER SELF MONITORING REPORT

PLEASE READ THE INSTRUCTIONS BEFORE COMPLETING THIS REPORT

PART I: IDENTIFYING INFORMATION

Company Name: Mallinckrodt Inc.

Permit No.: 2112059600 - 2.1

Premise Address: 3600 North Second St., St. Louis, MO 63147

Monitoring Period: ____(JAN-MAR) _____(APR-JUNE) __X_(JULY-SEPT) ____(OCT-DEC)

Samples Collected By: Mallinckrodt

Analysis Performed By: TEKLAB

Part II: ANALYTICAL RESULTS OF SELF MONITORING

		✓		✓				
MSD SAMPLE POINT REFERENCE NUMBERS	----->	011		011				
DATES ON WHICH SAMPLES WERE COLLECTED	----->	7/3/2009		9/19/2009				
TIMES AT WHICH SAMPLES WERE COLLECTED	----->	2:30		10:00				
PARAMETER	LIMIT	RECORD SAMPLE TYPES (G,C,M OR E) & RESULTS BELOW G=grab,C=composite,M=measured flow,E=estimated flow						UNITS
FLOW		E	14,000	E	14,000			gal/day
Benzo(a)anthracene		G	<0.016	G	<0.008			mg/l
Benzo(a)pyrene		G	<0.016	G	<0.008			mg/l
Benzo(b)fluoranthene		G	<0.016	G	<0.008			mg/l
Benzo(g,h,i)perylene		G	<0.016	G	<0.008			mg/l
Benzo(k)fluoranthene		G	<0.016	G	<0.008			mg/l
Bis(2-chloroethoxy)methane		G	<0.016	G	<0.008			mg/l
Bis(2-chloroethyl)ether		G	<0.016	G	<0.008			mg/l
Bis(2-chloroisopropyl)ether		G	<0.016	G	<0.008			mg/l
Bis(2-ethylhexyl)phthalate		G	<0.010	G	<0.005			mg/l
Butyl benzyl phthalate		G	<0.016	G	<0.008			mg/l
Chrysene		G	<0.016	G	<0.008			mg/l
Dibenzo(a,h)anthracene		G	<0.016	G	<0.008			mg/l
Diethyl phthalate		G	<0.016	G	<0.008			mg/l
Dimethyl phthalate		G	<0.016	G	<0.008			mg/l
Di-n-butyl phthalate		G	<0.016	G	<0.008			mg/l
Di-n-octyl-phthalate		G	<0.016	G	<0.008			mg/l
Fluoranthene		G	<0.016	G	<0.008			mg/l
Fluorene		G	<0.016	G	<0.008			mg/l
Hexachlorobenzene		G	<0.016	G	<0.008			mg/l
Hexachlorobutadiene		G	<0.016	G	<0.008			mg/l
Hexachlorocyclopentadiene		G	<0.033	G	<0.016			mg/l
Hexachloroethane		G	<0.016	G	<0.008			mg/l
Ideno(1,2,3-cd)pyrene		G	<0.016	G	<0.008			mg/l
Isophorone		G	<0.016	G	<0.008			mg/l
Naphthalene		G	<0.016	G	<0.008			mg/l
Nitrobenzene		G	<0.016	G	<0.008			mg/l
N-nitrosodimethylamine		G	<0.033	G	<0.016			mg/l
N-nitrosodi-n-propylamine		G	<0.016	G	<0.008			mg/l
N-nitrosodiphenylamine		G	<0.016	G	<0.008			mg/l
Pentachlorophenol		G	<0.033	G	<0.016			mg/l
Phenanthrene		G	<0.016	G	<0.008			mg/l
Phenol		G	<0.008	G	<0.004			mg/l
Pyrene		G	<0.016	G	<0.008			mg/l
1,2-Diphenylhydrazine		G	<0.016	G	<0.008			mg/l
Total Toxic Organics	5.52	--	1.275		0.787			mg/l
Lab Dilution Factor			1		1			

RECEIVED

OCT 29 2009

DIVISION OF
ENVIRONMENTAL COMPLIANCE

Mallinckrodt pH Monitoring Data for SP011: Planned Electrical Shutdown Overflow
September 19, 2009 - September 21, 2009

Date	Time	pH
19-Sep-09	10:00:00	8.33
19-Sep-09	10:30:00	8.37
19-Sep-09	11:00:00	8.46
19-Sep-09	11:30:00	8.37
19-Sep-09	12:00:00	8.38
19-Sep-09	12:30:00	8.38
19-Sep-09	13:00:00	8.43
19-Sep-09	13:30:00	8.43
19-Sep-09	14:00:00	8.43
19-Sep-09	14:30:00	8.44
19-Sep-09	15:00:00	8.48
19-Sep-09	15:30:00	7.42
19-Sep-09	16:00:00	7.32
19-Sep-09	16:30:00	7.51
19-Sep-09	17:00:00	8.32
19-Sep-09	17:30:00	8.41
19-Sep-09	18:00:00	8.53
19-Sep-09	18:30:00	8.51
19-Sep-09	19:00:00	8.58
19-Sep-09	19:30:00	8.63
19-Sep-09	20:00:00	8.61
19-Sep-09	20:30:00	8.63
19-Sep-09	21:00:00	8.65
19-Sep-09	21:30:00	8.66
19-Sep-09	22:00:00	8.70
19-Sep-09	22:30:00	8.72
19-Sep-09	23:00:00	8.77
19-Sep-09	23:30:00	8.79
20-Sep-09	0:00:00	8.73
20-Sep-09	0:30:00	8.83
20-Sep-09	1:00:00	8.84
20-Sep-09	1:30:00	8.78
20-Sep-09	2:00:00	8.75
20-Sep-09	2:30:00	8.75
20-Sep-09	3:00:00	8.74
20-Sep-09	3:30:00	8.78
20-Sep-09	4:00:00	8.78
20-Sep-09	4:30:00	8.75
20-Sep-09	5:00:00	8.80
20-Sep-09	5:30:00	8.88
20-Sep-09	6:00:00	8.81
20-Sep-09	6:30:00	8.82
20-Sep-09	7:00:00	8.83
20-Sep-09	7:30:00	8.85
20-Sep-09	8:00:00	8.23
20-Sep-09	8:30:00	8.08
20-Sep-09	9:00:00	8.55

RECEIVED
OCT 29 2009
DIVISION OF
ENVIRONMENTAL COMPLIANCE

20-Sep-09	9:30:00	8.27
20-Sep-09	10:00:00	7.68
20-Sep-09	10:30:00	8.59
20-Sep-09	11:00:00	9.40
20-Sep-09	11:30:00	8.98
20-Sep-09	12:00:00	9.00
20-Sep-09	12:30:00	8.85
20-Sep-09	13:00:00	8.91
20-Sep-09	13:30:00	8.97
20-Sep-09	14:00:00	8.95
20-Sep-09	14:30:00	8.99
20-Sep-09	15:00:00	9.39
20-Sep-09	15:30:00	8.94
20-Sep-09	16:00:00	8.88
20-Sep-09	16:30:00	8.91
20-Sep-09	17:00:00	8.91
20-Sep-09	17:30:00	8.87
20-Sep-09	18:00:00	8.84
20-Sep-09	18:30:00	8.85
20-Sep-09	19:00:00	8.87
20-Sep-09	19:30:00	8.88
20-Sep-09	20:00:00	8.86
20-Sep-09	20:30:00	8.86
20-Sep-09	21:00:00	8.86
20-Sep-09	21:30:00	8.85
20-Sep-09	22:00:00	8.86
20-Sep-09	22:30:00	8.85
20-Sep-09	23:00:00	8.87
20-Sep-09	23:30:00	8.86
21-Sep-09	0:00:00	8.87
21-Sep-09	0:30:00	8.87
21-Sep-09	1:00:00	8.88
21-Sep-09	1:30:00	8.76
21-Sep-09	2:00:00	8.86
21-Sep-09	2:30:00	8.85
21-Sep-09	3:00:00	8.76
21-Sep-09	3:30:00	8.67
21-Sep-09	4:00:00	8.66
21-Sep-09	4:30:00	8.65
21-Sep-09	5:00:00	8.62
21-Sep-09	5:30:00	8.59
21-Sep-09	6:00:00	8.49

RECEIVED

OCT 29 2009

DIVISION OF
ENVIRONMENTAL COMPLIANCE

METROPOLITAN ST. LOUIS SEWER DISTRICT
2009 INDUSTRIAL USER SELF MONITORING REPORT

PLEASE READ THE INSTRUCTIONS BEFORE COMPLETING THIS REPORT

PART I: IDENTIFYING INFORMATION

Company Name: Mallinckrodt Inc.
Permit No.: 2112059600 - 2.1
Premise Address: 3600 North Second St., St. Louis, MO 63147
Monitoring Period: ____(JAN-MAR) ____(APR-JUN) __X__(JULY-SEP) ____(OCT-DEC)
Samples Collected By: Mallinckrodt Inc
Analysis Performed By: TEKLAB

Part II: ANALYTICAL RESULTS OF SELF MONITORING

MSD SAMPLE POINT REFERENCE NUMBERS			---->		**080**						
DATES ON WHICH SAMPLES WERE COLLECTED			---->		7/13/2009						
TIMES AT WHICH SAMPLES WERE COLLECTED			---->		8:00, 9:00, 10:00, 11:00						
PARAMETER	EPA METHOD	DAILY MAX	AVG MONTHLY	**RECORD SAMPLE TYPES (G, C, M OR E) & RESULTS BELOW** G=Grab, C-composite, M=measured flow, E=estimated flow							UNITS
FLOW				E	3,500						gal/day
Acetone	524.2	20.70	8.20	G	<1.000						mg/L
n-Amyl Acetate	1666	20.70	8.20	G	<0.100						mg/L
Benzene	524.2	3.00	0.70	G	0.097						mg/L
n-Butyl acetate	1666	20.70	8.20	G	<0.100						mg/L
Chlorobenzene	524.2	3.00	0.70	G	<0.100						mg/L
Chloroform	524.2	0.10	0.03	G	0.011						mg/L
1,2-Dichlorobenzene	524.2	20.70	8.20	G	<0.100						mg/L
1,2-Dichloroethane	524.2	20.70	8.20	G	<0.100						mg/L
Diethyl amine	1671	255.00	100.00	G	<50						mg/L
Ethyl Acetate	1666	20.70	8.20	G	<0.200						mg/L
n-Heptane	1666	3.00	0.70	G	<0.200						mg/L
n-Hexane	1666	3.00	0.70	G	<0.200						mg/L
Isobutyraldehyde	1666	20.70	8.20	G	<0.200						mg/L
Isopropyl acetate	1666	20.70	8.20	G	<0.100						mg/L
Isopropyl ether	1666	20.70	8.20	G	<0.100						mg/L
Methylene chloride	524.2	3.00	0.70	G	<0.100						mg/L
Methyl formate	1666	20.70	8.20	G	<1.000						mg/L
4-Methyl-2-pentanone	1666	20.70	8.20	G	<0.200						mg/L
Tetrahydrofuran	1666	9.20	3.40	G	<0.400						mg/L
Toluene	524.2	0.30	0.20	G	<0.100						mg/L
Triethyl amine	1671	255.00	100.00	G	<20						mg/L
Xylenes	1666	3.00	0.70	G	<0.100						mg/L
Oil & Grease	1664	200		G	<5						mg/L
Biochemical Oxygen Demand		****		C	18						mg/L
Chemical Oxygen Demand		****		C	27						mg/L
Total Suspended Solids		****		C	51						mg/L
Temperature		60		G	27						deg C
pH		5.5 - 11.5		G	8.5						S.U.
Dilution by lab					1, 20						

RECEIVED

OCT 29 2009

DIVISION OF
ENVIRONMENTAL COMPLIANCE

Sample Point 080 Building 98

Process/ Product	Pharmaceutical OCPSF Non-Regulated	Date Start	Date End	Wastewater Disposition	Wastewater Sample Date	OCPSF-Cyanide, Zinc, Lead	Pharmaceutical-Cyanide
Peptides							
Boc-Leuprolide (8050)	Pharmaceutical	07-05-09 07-08-09	07-05-09 07-17-09	Drum		n/a	No
		07-09-09 07-21-09	07-14-09 07-25-09	MSD	7/13/09	n/a	No
Exenatide (7310)	Pharmaceutical	07-29-09 08-06-09 08-09-09 08-11-09 08-20-09 08-25-09 09-13-09 09-16-09 09-23-09 09-29-09	07-30-09 08-07-09 08-09-09 08-13-09 08-23-09 08-25-09 09-13-09 09-18-09 09-24-09 09-29-09	Drum		n/a	No

RECEIVED
OCT 29 2009
DIVISION OF
ENVIRONMENTAL COMPLIANCE

METROPOLITAN ST. LOUIS SEWER DISTRICT
2009 INDUSTRIAL USER SELF MONITORING REPORT

PLEASE READ THE INSTRUCTIONS BEFORE COMPLETING THIS REPORT

PART I: IDENTIFYING INFORMATION

Company Name: Mallinckrodt Inc.

Permit No.: 2112059600 - 2.1

Premise Address: 3600 North Second St., St. Louis, MO 63147

Monitoring Period: ____(JAN-MAR) _____ (APR-JUNE) ___X__(JULY-SEPT) _____(OCT-DEC)

Samples Collected By: Mallinckrodt

Analysis Performed By: TEKLAB

Part II: ANALYTICAL RESULTS OF SELF MONITORING

MSD SAMPLE POINT REFERENCE NUMBERS		---->		905				
DATES ON WHICH SAMPLES WERE COLLECTED		---->						
TIMES AT WHICH SAMPLES WERE COLLECTED		---->						
	LIMIT (ave)	LIMIT	RECORD SAMPLE TYPES (G,C,M OR E) & RESULTS BELOW G=grab,C=composite,M=measured flow,E=estimated flow					
PARAMETER	(gm/day)	(gm/day)			Lab results mg/L			UNITS
FLOW			M	*				gal/day
1,2,4-Trichlorobenzene	137.24	555.98	G		*			gm/day
1,2-Dichlorobenzene	137.24	555.98	G		*			gm/day
1,3-Dichlorobenzene	99.43	266.09	G		*			gm/day
1,4-Dichlorobenzene	99.43	266.09	G		*			gm/day
2-Nitrophenol	45.51	161.75	G		*			gm/day
2-Methyl-4,6-dinitrophenol	54.62	193.96	G		*			gm/day
4-Nitrophenol	113.44	403.33	G		*			gm/day
Acenapthene	13.3	32.91	G		*			gm/day
Anthracene	13.3	32.91	G		*			gm/day
Bis(2-ethylhexyl)phthalate	66.52	180.66	G		*			gm/day
Diethyl phthalate	32.21	79.13	G		*			gm/day
Dimethyl phthalate	13.3	32.91	G		*			gm/day
Di-n-butyl phthalate	14	30.11	G		*			gm/day
Fluoranthene	15.4	37.81	G		*			gm/day
Fluorene	13.3	32.91	G		*			gm/day
Hexachlorobenzene	137.24	555.98	G		*			gm/day
Hexachlorobutadiene	99.43	266.09	G		*			gm/day
Hexachloroethane	137.24	555.98	G		*			gm/day
Naphthalene	13.3	32.91	G		*			gm/day
Phenanthrene	13.3	32.91	G		*			gm/day
Pyrene	14	33.61	G		*			gm/day
1,1,1-Trichloroethane	15.4	41.31	G		*			gm/day
1,1,2-Trichloroethane	22.4	88.93	G		*			gm/day
1,1-Dichloroethane	15.4	41.31	G		*			gm/day
1,1-Dichloroethene	15.4	41.31	G		*			gm/day
1,2-Dichloroethane	126.04	401.93	G		*			gm/day
1,2-Dichloropropane	137.24	555.98	G		*			gm/day
Benzene	39.91	93.83	G		*			gm/day
Carbon Tetrachloride	99.43	266.09	G		*			gm/day
Chlorobenzene	99.43	266.09	G		*			gm/day
Chloroethane	77.02	206.57	G		*			gm/day
Chloroform	77.72	277.57	G		*			gm/day
Chloromethane	77.02	277.57	G		*			gm/day
cis-1,3-Dichloropropene	137.24	555.98	G		*			gm/day
Ethylbenzene	99.43	266.09	G		*			gm/day
Methylene Chloride	77.02	119.04	G		*			gm/day
Nitrobenzene	1566.4	4482.84	G		*			gm/day
Tetrachloroethene	36.41	114.84	G		*			gm/day
Toluene	19.61	51.82	G		*			gm/day
trans-1,2-Dichloroethene	17.51	46.21	G		*			gm/day
trans-1,3-Dichloropropene	137.24	555.98	G		*			gm/day
Trichloroethene	18.21	48.32	G		*			gm/day
Vinyl Chloride	67.92	120.44	G		*			gm/day
* No flow during this quarter - no production in the building.								
Lab Dilution Factor								

RECEIVED
OCT 29 2009
DIVISION OF
ENVIRONMENTAL COMPLIANCE

METROPOLITAN ST. LOUIS SEWER DISTRICT
2009 INDUSTRIAL USER SELF MONITORING REPORT

PLEASE READ THE INSTRUCTIONS BEFORE COMPLETING THIS REPORT

PART I: IDENTIFYING INFORMATION

Company Name: Mallinckrodt Inc.

Permit No.: 2112059600 - 2.1

Premise Address: 3600 North Second St., St. Louis, MO 63147

Monitoring Period: _____(JAN-MAR) ____(APR-JUNE) __X__(JULY-SEPT) ____(OCT-DEC)

Samples Collected By: Mallinckrodt Inc

Analysis Performed By: TEKLAB

Part II: ANALYTICAL RESULTS OF SELF MONITORING

MSD SAMPLE POINT REFERENCE NUMBERS	----->		912						
DATES ON WHICH SAMPLES WERE COLLECTED	----->		See attached						
TIMES AT WHICH SAMPLES WERE COLLECTED	----->								
PARAMETER	LIMIT	RECORD SAMPLE TYPES (G,C,M OR E) & RESULTS BELOW G=grab,C=composite,M=measured flow,E=estimated flow							UNITS
FLOW		M	See attached						gal/day
DMAC (daily max)	7091	C	See attached						lb/day
DMAC (monthly average)	5459	C	See attached						lb/day
	*								
* Monitoring requirement only.									
Lab Dilution Factor			1						

RECEIVED

OCT 29 2009

DIVISION OF
ENVIRONMENTAL COMPLIANCE

DMAC Analysis and Mass Loadings - SP912				
3rd Quarter 2009				Analysis by TEKLAB unless otherwise noted.
Date	Flow	DMAC		
	GPD	mg/l	lb/day	
July -09				
7/6/2009	72,145	81	50	
7/13/2009	61,107	980	509	
7/20/2009	137,620	1100	1286	
7/27/2009	204,268	1100	1908	
July Ave:			**938**	**lb/day**
Daily Max:			**1,908**	**lb/day**
August -09				
8/3/2009	182,961	790	1227	
8/10/2009	194,213	1100	1814	
8/17/2009	219,704	1200	2239	
8/24/2009	197,769	830	1394	
8/31/2009	194,959	1300	2152	
August Ave:			**1,669**	**lb/day**
Daily Max:			**2,239**	**lb/day**
September - 09				
9/7/2009	163,979	1400	1949	
9/14/2009	84,978	940	678	
9/19/2009	320	160	0	
9/26/2009	74,933	1300	827	
9/28/2009	150,748	850	1088	
September Ave:			**909**	**lb/day**
Daily Max:			**1,949**	**lb/day**

RECEIVED
OCT 29 2009
DIVISION OF
ENVIRONMENTAL COMPLIANCE

METROPOLITAN ST. LOUIS SEWER DISTRICT
2009 INDUSTRIAL USER SELF MONITORING REPORT

PART I: IDENTIFYING INFORMATION

Company Name: **MALLINCKRODT INC.**
Permit No.: 2112059600 - 2.1 Effective Date: 07-01-2008 Expiration Date: 05-31-2010
Premise Address: 3600 North Second St., St. Louis, MO 63147
Monitoring Period: ____(JAN-MAR) ____(APR-JUN) __X__(JULY-SEP) ____(OCT-DEC)
Samples Collected By: Mallinckrodt Inc
Analysis Performed By: TEKLAB

Part II: ANALYTICAL RESULTS OF SELF MONITORING

MSD SAMPLE POINT REFERENCE NUMBERS			---->		**915**						
DATES ON WHICH SAMPLES WERE COLLECTED			---->		8/13/2009						
TIMES AT WHICH SAMPLES WERE COLLECTED			---->		09:45						
PARAMETER	EPA METHOD	DAILY MAX	AVG MONTHLY	**RECORD SAMPLE TYPES (G, C, M OR E) & RESULTS BELOW** G=Grab, C-composite, M=measured flow, E=estimated flow							UNITS
FLOW				E	20,000						gal/day
Acetone	524.2	20.70	8.20	G	0.560						mg/L
n-Amyl acetate	1666	20.70	8.20	G	<0.100						mg/L
Benzene	524.2	3.00	0.70	G	<0.100						mg/L
n-Butyl acetate	1666	20.70	8.20	G	<0.100						mg/L
Chlorobenzene	524.2	3.00	0.70	G	<0.100						mg/L
Chloroform	524.2	0.10	0.03	G	<0.020						mg/L
1,2-Dichlorobenzene	524.2	20.70	8.20	G	<0.100						mg/L
1,2-Dichloroethane	524.2	20.70	8.20	G	<0.100						mg/L
Diethyl amine	1671	255.00	100.00	G	*						mg/L
Ethyl Acetate	1666	20.70	8.20	G	<0.200						mg/L
n-Heptane	1666	3.00	0.70	G	<0.200						mg/L
n-Hexane	1666	3.00	0.70	G	<0.200						mg/L
Isobutyraldehyde	1666	20.70	8.20	G	0.081						mg/L
Isopropyl acetate	1666	20.70	8.20	G	<0.100						mg/L
Isopropyl ether	1666	20.70	8.20	G	<0.100						mg/L
Methylene chloride	524.2	3.00	0.70	G	<0.100						mg/L
Methyl formate	1666	20.70	8.20	G	<1						mg/L
4-Methyl-2-pentanone	1666	20.70	8.20	G	<0.200						mg/L
Tetrahydrofuran	1666	9.20	3.40	G	<0.400						mg/L
Toluene	524.2	0.30	0.20	G	0.127						mg/L
Triethyl amine	1671	255.00	100.00	G	*						mg/L
Xylenes	1666	3.00	0.70	G	<0.100						mg/L
** Annual sampling requirement for this parameter.*											
Dilution by lab					20						

RECEIVED
OCT 29 2009
DIVISION OF
ENVIRONMENTAL COMPLIANCE

METROPOLITAN ST. LOUIS SEWER DISTRICT
2009 INDUSTRIAL USER SELF MONITORING REPORT

PART I: IDENTIFYING INFORMATION

Company Name: **MALLINCKRODT INC.**
Permit No.: 2112059600 - 2.1 Effective Date: 07-01-2008 Expiration Date: 05-31-2010
Premise Address: 3600 North Second St., St. Louis, MO 63147
Monitoring Period: ____(JAN-MAR) ____(APR-JUN) __X__(JULY-SEP) ____(OCT-DEC)
Samples Collected By: Mallinckrodt Inc
Analysis Performed By: TEKLAB

Part II: ANALYTICAL RESULTS OF SELF MONITORING

MSD SAMPLE POINT REFERENCE NUMBERS					**918**						
DATES ON WHICH SAMPLES WERE COLLECTED											
TIMES AT WHICH SAMPLES WERE COLLECTED											
PARAMETER	EPA METHOD	DAILY MAX	AVG MONTHLY	**RECORD SAMPLE TYPES (G, C, M OR E) & RESULTS BELOW** G=Grab, C-composite, M=measured flow, E=estimated flow							UNITS
FLOW				E	*						gal/day
Acetone	524.2	20.70	8.20	G							mg/L
Ethyl Acetate	1666	20.70	8.20	G							mg/L
Isopropyl acetate	1666	20.70	8.20	G							mg/L
Methylene chloride	524.2	3.00	0.70	G							mg/L
n-Amyl acetate	1666	20.70	8.20	G							mg/L
**** No flow this quarter***											
Dilution by lab											

RECEIVED
OCT 29 2009
DIVISION OF
ENVIRONMENTAL COMPLIANCE

METROPOLITAN ST. LOUIS SEWER DISTRICT
2009 INDUSTRIAL USER SELF MONITORING REPORT

PART I: IDENTIFYING INFORMATION

Company Name: **MALLINCKRODT INC.**
Permit No.: 2112059600 - 2.1 Effective Date: 07-01-2008 Expiration Date: 05-31-2010
Premise Address: 3600 North Second St., St. Louis, MO 63147
Monitoring Period: ____(JAN-MAR) ____(APR-JUN) __X__(JULY-SEP) _ ___(OCT-DEC)
Samples Collected By: Mallinckrodt Inc
Analysis Performed By: TEKLAB

Part II: ANALYTICAL RESULTS OF SELF MONITORING

MSD SAMPLE POINT REFERENCE NUMBERS					920							
DATES ON WHICH SAMPLES WERE COLLECTED					8/3/2009							
TIMES AT WHICH SAMPLES WERE COLLECTED					8:45							
PARAMETER	EPA METHOD	DAILY MAX	AVG MONTHLY	RECORD SAMPLE TYPES (G, C, M OR E) & RESULTS BELOW G=Grab, C-composite, M=measured flow, E=estimated flow								UNITS
FLOW				E	22,000	E						gal/day
Tetrahydrofuran	1666	9.20	3.40	G	<0.400	G						mg/L
Toluene	524.2	0.30	0.20	G	0.018	G						mg/L
Dilution by lab					20							

RECEIVED
OCT 29 2009
DIVISION OF
ENVIRONMENTAL COMPLIANCE

METROPOLITAN ST. LOUIS SEWER DISTRICT
2009 INDUSTRIAL USER SELF MONITORING REPORT

PART I: IDENTIFYING INFORMATION

Company Name: **MALLINCKRODT INC.**
Permit No.: 2112059600 - 2.1 Effective Date: 07-01-2008 Expiration Date: 05-31-2010
Premise Address: 3600 North Second St., St. Louis, MO 63147
Monitoring Period: ____(JAN-MAR) ____(APR-JUN) __X__(JULY-SEP) ____(OCT-DEC)
Samples Collected By: Mallinckrodt Inc
Analysis Performed By: TEKLAB

Part II: ANALYTICAL RESULTS OF SELF MONITORING

MSD SAMPLE POINT REFERENCE NUMBERS			---->		927						
DATES ON WHICH SAMPLES WERE COLLECTED			---->		7/27/2009						
TIMES AT WHICH SAMPLES WERE COLLECTED			---->		12:35						
PARAMETER	EPA METHOD	DAILY MAX	AVG MONTHLY	RECORD SAMPLE TYPES (G, C, M OR E) & RESULTS BELOW G=Grab, C-composite, M=measured flow, E=estimated flow							UNITS
FLOW				E	2,200						gal/day
Acetone	524.2	20.70	8.20	G	<1						mg/L
n-Amyl acetate	1666	20.70	8.20	G	<0.100						mg/L
Ethyl Acetate	1666	20.70	8.20	G	<0.200						mg/L
Isopropyl acetate	1666	20.70	8.20	G	<0.100						mg/L
Methylene chloride	524.2	3.00	0.70	G	<0.100						mg/L
Dilution by lab					20						

RECEIVED
OCT 29 2009
DIVISION OF
ENVIRONMENTAL COMPLIANCE

METROPOLITAN ST. LOUIS SEWER DISTRICT
2009 INDUSTRIAL USER SELF MONITORING REPORT

PLEASE READ THE INSTRUCTIONS BEFORE COMPLETING THIS REPORT

PART I: IDENTIFYING INFORMATION

Company Name: Mallinckrodt Inc.
Permit No.: 2112059600 - 2.1
Premise Address: 3600 North Second St., St. Louis, MO 63147
Monitoring Period: ____(JAN-MAR) ____(APR-JUN) __X__(JULY-SEP) _____(OCT-DEC)
Samples Collected By: Mallinckrodt Inc
Analysis Performed By: TekLab

Part II: ANALYTICAL RESULTS OF SELF MONITORING

MSD SAMPLE POINT REFERENCE NUMBERS					930							
DATES ON WHICH SAMPLES WERE COLLECTED					8/14/2009							
TIMES AT WHICH SAMPLES WERE COLLECTED					8:30							
PARAMETER	EPA METHOD	DAILY MAX	AVG MONTHLY	**RECORD SAMPLE TYPES (G, C, M OR E) & RESULTS BELOW** G=Grab, C-composite, M=measured flow, E=estimated flow								UNITS
FLOW				E	2200							gal/day
Acetone	524.2	20.70	8.20	G	<1							mg/L
Ethyl Acetate	1666	20.70	8.20	G	<0.200							mg/L
Isopropyl acetate	1666	20.70	8.20	G	<0.100							mg/L
Methylene chloride	524.2	3.00	0.70	G	<0.100							mg/L
n-Amyl acetate	1666	20.70	8.20	G	<0.100							mg/L
Dilution by lab					20							

RECEIVED
OCT 29 2009
DIVISION OF
ENVIRONMENTAL COMPLIANCE

METROPOLITAN ST. LOUIS SEWER DISTRICT
2009 INDUSTRIAL USER SELF MONITORING REPORT

PLEASE READ THE INSTRUCTIONS BEFORE COMPLETING THIS REPORT

PART I: IDENTIFYING INFORMATION

Company Name: Mallinckrodt Inc.
Permit No.: 2112059600 - 2.1
Premise Address: 3600 North Second St., St. Louis, MO 63147
Monitoring Period: ____(JAN-MAR) ____(APR-JUN) __X__(JULY-SEP) ____(OCT-DEC)
Samples Collected By: Mallinckrodt Inc
Analysis Performed By: TekLab

Part II: ANALYTICAL RESULTS OF SELF MONITORING

MSD SAMPLE POINT REFERENCE NUMBERS					932						
DATES ON WHICH SAMPLES WERE COLLECTED											
TIMES AT WHICH SAMPLES WERE COLLECTED											
PARAMETER	EPA METHOD	DAILY MAX	AVG MONTHLY	RECORD SAMPLE TYPES (G, C, M OR E) & RESULTS BELOW G=Grab, C-composite, M=measured flow, E=estimated flow							UNITS
FLOW				E	0						gal/day
Acetone	524.2	20.70	8.20	G	*						mg/L
Benzene	524.2	3.00	0.70	G	*						mg/L
Chlorobenzene	524.2	3.00	0.70	G	*						mg/L
Chloroform	524.2	0.10	0.03	G	*						mg/L
1,2-Dichlorobenzene	524.2	20.70	8.20	G	*						mg/L
1,2-Dichloroethane	524.2	20.70	8.20	G	*						mg/L
Ethyl Acetate	1666	20.70	8.20	G	*						mg/L
n-Hexane	1666	3.00	0.70	G	*						mg/L
Methylene chloride	524.2	3.00	0.70	G	*						mg/L
4-Methyl-2-pentanone	1666	20.70	8.20	G	*						mg/L
Tetrahydrofuran	1666	9.20	3.40	G	*						mg/L
Toluene	524.2	0.30	0.20	G	*						mg/L
Xylenes	1666	3.00	0.70	G	*						mg/L
Isobutyraldehyde	1666	20.70	8.20	G	*						mg/L
n-Amyl acetate	1666	20.70	8.20	G	*						mg/L
n-Butyl acetate	1666	20.70	8.20	G	*						mg/L
Isopropyl acetate	1666	20.70	8.20	G	*						mg/L
Isopropyl ether	1666	20.70	8.20	G	*						mg/L
n-Heptane	1666	3.00	0.70	G	*						mg/L
Methyl formate	1666	20.70	8.20	G	*						mg/L
Diethyl amine	1671	255.00	100.00	G	*						mg/L
Triethyl amine	1671	255.00	100.00	G	*						mg/L
No flow this quarter											
Dilution by lab											

RECEIVED
OCT 29 2009
DIVISION OF
ENVIRONMENTAL COMPLIANCE

METROPOLITAN ST. LOUIS SEWER DISTRICT
2009 INDUSTRIAL USER SELF MONITORING REPORT

PLEASE READ THE INSTRUCTIONS BEFORE COMPLETING THIS REPORT

PART I: IDENTIFYING INFORMATION

Company Name: Mallinckrodt Inc.
Permit No.: 2112059600 - 2.1
Premise Address: 3600 North Second St., St. Louis, MO 63147
Monitoring Period: _____(JAN-MAR) ____(APR-JUN) __X__(JULY-SEP) ____(OCT-DEC)
Samples Collected By: Mallinckrodt Inc
Analysis Performed By: TekLab

Part II: ANALYTICAL RESULTS OF SELF MONITORING

MSD SAMPLE POINT REFERENCE NUMBERS					**933**							
DATES ON WHICH SAMPLES WERE COLLECTED					9/29/2009							
TIMES AT WHICH SAMPLES WERE COLLECTED					08:30							
PARAMETER	EPA METHOD	DAILY MAX	AVG MONTHLY	**RECORD SAMPLE TYPES (G, C, M OR E) & RESULTS BELOW** G=Grab, C-composite, M=measured flow, E=estimated flow								UNITS
FLOW				E	3,000							gal/day
Acetone	524.2	20.70	8.20	G	<1							mg/L
n-Amyl acetate	1666	20.70	8.20	G	<0.100							mg/L
Ethyl Acetate	1666	20.70	8.20	G	<0.200							mg/L
Isopropyl acetate	1666	20.70	8.20	G	<0.100							mg/L
Methylene chloride	524.2	3.00	0.70	G	<0.100							mg/L
Dilution by lab					20							

RECEIVED
OCT 29 2009
DIVISION OF
ENVIRONMENTAL COMPLIANCE

METROPOLITAN ST. LOUIS SEWER DISTRICT
2009 INDUSTRIAL USER SELF MONITORING REPORT

PLEASE READ THE INSTRUCTIONS BEFORE COMPLETING THIS REPORT

PART I: IDENTIFYING INFORMATION

Company Name: Mallinckrodt Inc.
Permit No.: 2112059600 - 2.1
Premise Address: 3600 North Second St., St. Louis, MO 63147
Monitoring Period: ____(JAN-MAR) ____(APR-JUN) __X__(JULY-SEP) ____(OCT-DEC)
Samples Collected By: Mallinckrodt Inc
Analysis Performed By:

Part II: ANALYTICAL RESULTS OF SELF MONITORING

MSD SAMPLE POINT REFERENCE NUMBERS					935						
DATES ON WHICH SAMPLES WERE COLLECTED											
TIMES AT WHICH SAMPLES WERE COLLECTED											
PARAMETER	EPA METHOD	DAILY MAX	AVG MONTHLY	**RECORD SAMPLE TYPES (G, C, M OR E) & RESULTS BELOW** G=Grab, C-composite, M=measured flow, E=estimated flow							UNITS
FLOW				E	0						gal/day
Acetone	524.2	20.70	8.20	G	*						mg/L
Benzene	524.2	3.00	0.70	G	*						mg/L
Chlorobenzene	524.2	3.00	0.70	G	*						mg/L
Chloroform	524.2	0.10	0.03	G	*						mg/L
1,2-Dichlorobenzene	524.2	20.70	8.20	G	*						mg/L
1,2-Dichloroethane	524.2	20.70	8.20	G	*						mg/L
Ethyl Acetate	1666	20.70	8.20	G	*						mg/L
n-Hexane	1666	3.00	0.70	G	*						mg/L
Methylene chloride	524.2	3.00	0.70	G	*						mg/L
4-Methyl-2-pentanone	1666	20.70	8.20	G	*						mg/L
Tetrahydrofuran	1666	9.20	3.40	G	*						mg/L
Toluene	524.2	0.30	0.20	G	*						mg/L
Xylenes	1666	3.00	0.70	G	*						mg/L
Isobutyraldehyde	1666	20.70	8.20	G	*						mg/L
n-Amyl acetate	1666	20.70	8.20	G	*						mg/L
n-Butyl acetate	1666	20.70	8.20	G	*						mg/L
Isopropyl acetate	1666	20.70	8.20	G	*						mg/L
Isopropyl ether	1666	20.70	8.20	G	*						mg/L
n-Heptane	1666	3.00	0.70	G	*						mg/L
Methyl formate	1666	20.70	8.20	G	*						mg/L
Diethyl amine	1671	255.00	100.00	G	*						mg/L
Triethyl amine	1671	255.00	100.00	G	*						mg/L
**** No PEG flow this quarter***											
Dilution by lab											

RECEIVED
OCT 29 2009
DIVISION OF
ENVIRONMENTAL COMPLIANCE

METROPOLITAN ST. LOUIS SEWER DISTRICT
2009 INDUSTRIAL USER SELF MONITORING REPORT

PLEASE READ THE INSTRUCTIONS BEFORE COMPLETING THIS REPORT

PART I: IDENTIFYING INFORMATION

Company Name: Mallinckrodt Inc.
Permit No.: 2112059600 - 2.1
Premise Address: 3600 North Second St., St. Louis, MO 63147
Monitoring Period: ____(JAN-MAR) _____(APR-JUN) __X__(JULY-SEP) ____(OCT-DEC)
Samples Collected By: Mallinckrodt Inc
Analysis Performed By: TEKLAB

Part II: ANALYTICAL RESULTS OF SELF MONITORING

MSD SAMPLE POINT REFERENCE NUMBERS ----->					**936**						
DATES ON WHICH SAMPLES WERE COLLECTED ----->					7/8/2009						
TIMES AT WHICH SAMPLES WERE COLLECTED ----->					9:44						
PARAMETER	EPA METHOD	DAILY MAX	AVG MONTHLY	**RECORD SAMPLE TYPES (G, C, M OR E) & RESULTS** G=Grab, C-composite, M=measured flow, E=estimated flow							UNITS
FLOW				E	14,400						gal/day
Acetone	524.2	20.70	8.20	G	<1						mg/L
n-Amyl acetate	1666	20.70	8.20	G	<0.100						mg/L
Benzene	524.2	3.00	0.70	G	<0.100						mg/L
n-Butyl acetate	1666	20.70	8.20	G	<0.100						mg/L
Chlorobenzene	524.2	3.00	0.70	G	<0.100						mg/L
Chloroform*	524.2	0.10	0.03	G	<0.020						mg/L
1,2-Dichlorobenzene	524.2	20.70	8.20	G	<0.100						mg/L
1,2-Dichloroethane	524.2	20.70	8.20	G	<0.100						mg/L
Diethyl amine	1671	255.00	100.00	G	**						mg/L
Ethyl Acetate	1666	20.70	8.20	G	<0.200						mg/L
n-Heptane	1666	3.00	0.70	G	<0.200						mg/L
n-Hexane	1666	3.00	0.70	G	<0.200						mg/L
Isobutyraldehyde	1666	20.70	8.20	G	<0.200						mg/L
Isopropyl acetate	1666	20.70	8.20	G	<0.100						mg/L
Isopropyl ether	1666	20.70	8.20	G	<0.100						mg/L
Methylene chloride	524.2	3.00	0.70	G	<0.100						mg/L
Methyl formate	1666	20.70	8.20	G	<1						mg/L
4-Methyl-2-pentanone	1666	20.70	8.20	G	<0.200						mg/L
Tetrahydrofuran	1666	9.20	3.40	G	<0.400						mg/L
Toluene	524.2	0.30	0.20	G	<0.100						mg/L
Triethyl amine	1671	255.00	100.00	G	**						mg/L
Xylenes	1666	3.00	0.70	G	<0.100						mg/L
* Chloroform Results	Raw Water	SP936									
7/8/2009	<0.020 mg/l	<0.020 mg/l									
Results above reported as the difference between SP936 and Raw Water.											
** Annual sampling requirement for these parameters.											
Dilution by lab					20						

RECEIVED
OCT 29 2009
DIVISION OF
ENVIRONMENTAL COMPLIANCE

METROPOLITAN ST. LOUIS SEWER DISTRICT
2009 INDUSTRIAL USER SELF MONITORING REPORT

PLEASE READ THE INSTRUCTIONS BEFORE COMPLETING THIS REPORT

PART I: IDENTIFYING INFORMATION

Company Name: Mallinckrodt Inc.
Permit No.: 2112059600 - 2.1
Premise Address: 3600 North Second St., St. Louis, MO 63147
Monitoring Period: ___(JAN-MAR) ___(APR-JUN) __X__(JULY-SEP) ___(OCT-DEC)
Samples Collected By: Mallinckrodt Inc
Analysis Performed By: TEKLAB

Part II: ANALYTICAL RESULTS OF SELF MONITORING

MSD SAMPLE POINT REFERENCE NUMBERS			---->		937						
DATES ON WHICH SAMPLES WERE COLLECTED			---->		8/3/2009						
TIMES AT WHICH SAMPLES WERE COLLECTED			---->		8:50						
PARAMETER	EPA METHOD	DAILY MAX	AVG MONTHLY	**RECORD SAMPLE TYPES (G, C, M OR E) & RESULTS BELOW** G=Grab, C-composite, M=measured flow, E=estimated flow							UNITS
FLOW				E	22,000						gal/day
Tetrahydrofuran	524.2	9.20	3.40	G	<0.400						mg/L
Toluene	524.2	0.30	0.20	G	<0.100						mg/L
Dilution by lab					20						

RECEIVED
OCT 29 2009
DIVISION OF
ENVIRONMENTAL COMPLIANCE

METROPOLITAN ST. LOUIS SEWER DISTRICT
2009 INDUSTRIAL USER SELF MONITORING REPORT

PLEASE READ THE INSTRUCTIONS BEFORE COMPLETING THIS REPORT

PART I: IDENTIFYING INFORMATION

Company Name: Mallinckrodt Inc.
Permit No.: 2112059600 - 2.1
Premise Address: 3600 North Second St., St. Louis, MO 63147
Monitoring Period: _____(JAN-MAR) ____(APR-JUN) __X__(JULY-SEP) ____(OCT-DEC)
Samples Collected By: Mallinckrodt Inc
Analysis Performed By: TekLab

Part II: ANALYTICAL RESULTS OF SELF MONITORING

MSD SAMPLE POINT REFERENCE NUMBERS			---->		**938**						
DATES ON WHICH SAMPLES WERE COLLECTED			---->		9/15/2009						
TIMES AT WHICH SAMPLES WERE COLLECTED			---->		09:40						
PARAMETER	EPA METHOD	DAILY MAX	AVG MONTHLY	**RECORD SAMPLE TYPES (G, C, M OR E) & RESULTS BELOW** G=Grab, C-composite, M=measured flow, E=estimated flow							UNITS
FLOW				E	3,000						gal/day
Acetone	524.2	20.70	8.20	G	0.130						mg/L
n-Amyl acetate	1666	20.70	8.20	G	<0.100						mg/L
Ethyl Acetate	1666	20.70	8.20	G	<0.200						mg/L
Isopropyl acetate	1666	20.70	8.20	G	<0.100						mg/L
Methylene chloride	524.2	3.00	0.70	G	<0.100						mg/L
Dilution by lab					20						

RECEIVED
OCT 29 2009
DIVISION OF
ENVIRONMENTAL COMPLIANCE

Mallinckrodt
21120596-00

Steve Grace

From: Steve Grace
Sent: Wednesday, October 28, 2009 4:14 PM
To: 'Meyer, Lisa A'
Subject: RE: Covidien - Cyanide Wastewater Sample

Hello Lisa,

A review of the attached analytical report indicates cyanide concentrations in the final tote of wastewater from production in Building 97 meets the categorical pretreatment standards outlined in 40 CFR 439.37. Therefore, the wastewater represented by sample ID Aqueous Cyanide Tote 4A is approved for discharge to your PEG system prior to discharge to the District. As a condition of this approval, you must notify us of any changes that would affect the characteristics of this discharge. All other conditions of the original approval remain in effect.

Please contact me at (314) 436-8755 with questions or comments.

Thank you,
Steve Grace

From: Meyer, Lisa A [mailto:Lisa.Meyer@Covidien.com]
Sent: Wednesday, October 28, 2009 3:37 PM
To: Steve Grace
Subject: Covidien - Cyanide Wastewater Sample
Importance: High

Steve,
I have attached the analysis from the final tote of wastewater from production in Building 97. Cyanide result is as follows:

Aqueous Cyanide Tote 4A <0.35 mg/l

We would like to request approval for the discharge of last tote (approximately 100 gallons) to the PEG system for treatment and discharge to MSD.

Thank you.

Lisa

Lisa Meyer
Senior HSE Engineer
Covidien
Mallinckrodt
3600 North Second Street
St. Louis, MO 63147
USA

314.654.3374 office
314.848.3772 pager

TEKLAB, INC.

5445 HORSESHOE LAKE ROAD
COLLINSVILLE, ILLINOIS 62234

ENVIRONMENTAL TESTING LABORATORY

TEL: 618-344-1004
FAX: 618-344-1005

October 27, 2009

Lisa Meyer
Mallinckrodt Inc.
3600 N. 2nd St.
St. Louis, MO 63147
TEL: (314) 654-3374
FAX: (314) 654-1251

ACCREDITED IN ACCORDANCE WITH nelac

NELAP Accredited #100226

RE: Step 4 Tote

WorkOrder: 09101033

Dear Lisa Meyer:

TEKLAB, INC received 1 sample on 10/26/2009 4:15:00 PM for the analysis presented in the following report.

Samples are analyzed on an as received basis unless otherwise requested and documented. The sample results contained in this report relate only to the requested analytes of interest as directed on the chain of custody. IL ELAP and NELAP accredited fields of testing are indicated by the letters NELAP under the Certification column.

All quality control criteria applicable to the test methods employed for this project have been satisfactorily met and are in accordance with NELAP except where noted. The following report shall not be reproduced, except in full, without the written approval of Teklab, Inc.

If you have any questions regarding these tests results, please feel free to call.

Sincerely,

Heather A. White

Heather A. White
Project Manager
(618)344-1004 ex 20

TEKLAB, INC.

5445 HORSESHOE LAKE ROAD
COLLINSVILLE, ILLINOIS 62234

ENVIRONMENTAL TESTING LABORATORY

TEL: 618-344-1004
FAX: 618-344-1005

Client: Mallinckrodt Inc.
Project: Step 4 Tote
LabOrder: 09101033
Report Date: 27-Oct-09

CASE NARRATIVE

Cooler Receipt Temp: 1.8 °C

State accreditations:

KS: NELAP #E-10347 | KY: UST #0073 | MO: DNR #00930 | AR: ADEQ #70-028-0

Qualifiers

DF - Dilution Factor	**B** - Analyte detected in the associated Method Blank	**C** - Client requested RL below PQL
RL - Reporting Limit	**J** - Analyte detected below reporting limits	**D** - Diluted out of sample
ND - Not Detected at the Reporting Limit	**R** - RPD outside accepted recovery limits	**E** - Value above quantitation range
Surr - Surrogate Standard added by lab	**S** - Spike Recovery outside accepted recovery limits	**H** - Holding time exceeded
TNTC - Too numerous to count (> 200 CFU)	**X** - Value exceeds Maximum Contaminant Level	**MI** - Matrix interference
Q - QC criteria failed or noncompliant CCV	**#** - Unknown hydrocarbon	**DNI** - Did not ignite
NELAP - IL ELAP and NELAP Accredited Field of Testing	**IDPH** - IL Dept. of Public Health	

TEKLAB, INC.

5445 HORSESHOE LAKE ROAD
COLLINSVILLE, ILLINOIS 62234

ENVIRONMENTAL TESTING LABORATORY

TEL: 618-344-1004
FAX: 618-344-1005

LABORATORY RESULTS

Client: Mallinckrodt Inc.
WorkOrder: 09101033
Lab ID: 09101033-001
Report Date: 27-Oct-09

Client Project: Step 4 Tote
Client Sample ID: Aqueous Cyanide Tote 4A
Collection Date: 10/21/2009 3:15:00 PM
Matrix: AQUEOUS

Analyses	Certification	RL	Qual	Result	Units	DF	Date Analyzed	Analyst
EPA 335.4 R1.0 (TOTAL)								
Cyanide	NELAP	0.350		**< 0.350**	mg/L	1	10/27/2009 1:28:34 PM	RCE

Sample Narrative

TEKLAB, INC.

5445 HORSESHOE LAKE ROAD
COLLINSVILLE, ILLINOIS 62234

ENVIRONMENTAL TESTING LABORATORY

TEL: 618-344-1004
FAX: 618-344-1005

RECEIVING CHECK LIST

Client: Mallinckrodt Inc.
Project: Step 4 Tote
Lab Order: 09101033
Report Date: 27-Oct-09

Carrier: Terry Hattan

Received By: EAH

Completed by: Marvin L. Darling II
On: 26-Oct-09
Marvin L. Darling

Reviewed by: Heather A. White
On: 27-Oct-09
Heather A. White

Pages to follow: Chain of custody 1 Extra pages included 0

Shipping container/cooler in good condition?	Yes ☑	No ☐	Not Present ☐	Temp °C 1.8
Type of thermal preservation?	None ☐	Ice ☑	Blue Ice ☐	Dry Ice ☐
Chain of custody present?	Yes ☑	No ☐		
Chain of custody signed when relinquished and received?	Yes ☑	No ☐		
Chain of custody agrees with sample labels?	Yes ☑	No ☐		
Samples in proper container/bottle?	Yes ☑	No ☐		
Sample containers intact?	Yes ☑	No ☐		
Sufficient sample volume for indicated test?	Yes ☑	No ☐		
All samples received within holding time?	Yes ☑	No ☐		
Reported field parameters measured:	Field ☐	Lab ☐	NA ☑	
Container/Temp Blank temperature in compliance?	Yes ☑	No ☐		

When thermal preservation is required, samples are compliant with a temperature between 0.1°C - 6.0°C, or when samples are received on ice the same day as collected.

Water - VOA vials have zero headspace?	Yes ☐	No ☐	No VOA vials	☑
Water - TOX containers have zero headspace?	Yes ☐	No ☐	No TOX containers	☑
Water - pH acceptable upon receipt?	Yes ☑	No ☐		

Any No responses must be detailed below or on the COC.

CHAIN OF CUSTODY

pg. 1 of 1 Work Order # 09101033

TEKLAB, INC. 5445 Horseshoe Lake Road ~ Collinsville, IL 62234 ~ Phone: (618) 344-1004 ~ Fax: (618) 344-1005

Client: Mallinckrodt / Covidien
Address: 3600 N 2nd ST.
City / State / Zip: ST. Louis MO 63187
Contact: Lisa Meyer Phone:
E-Mail: Fax:

Samples on: ☒ Ice ☐ Blue Ice ☐ No Ice 1.8 °C
Preserved in: ☐ Lab ☒ Field MLPS 10/26/09
FOR LAB USE ONLY
Lab Notes:

Comments: RL 9.4 mg/L or Less of Cyanide

- Are these samples known to be involved in litigation? If yes, a surcharge will apply. ☐ Yes ☐ No
- Are these samples known to be hazardous? ☐ Yes ☐ No
- Are there any required reporting limits to be met on the requested analysis? If yes, please provide limits in comment section. ☐ Yes ☐ No

Project Name / Number: Step 4 Tote
Sample Collector's Name: GW
Results Requested: ☐ Standard ☒ 1-2 Day (100% Surcharge) ☐ Other ____ ☐ 3 Day (50% Surcharge)
Billing Instructions:

Lab Use Only	Sample Identification	Date/Time Sampled	UNPRES	HNO_3	NaOH	H_2SO_4	HCL	MeOH	$NaHSO_4$	Other	Water	Drinking Water	Soil	Sludge	Sp. Waste	Cyanide	1 DAY
09101033-01	Aqueous Cyanide Tote 4A	10-21-09 15:15			✓						✓					✓	

Teklab, Inc. Courier Pick Up

Relinquished By	Date / Time	Received By	Date / Time
[signature]	10/26/09 1505	[signature]	10/26/09 1505
[signature]	10/26/09 1615	[signature]	10/26/09 1615

The individual signing this agreement on behalf of client acknowledges that he/she has read and understands the terms and conditions of this agreement, on the reverse side, and that he/she has the authority to sign on behalf of client.

WHITE & YELLOW – LAB PINK – SAMPLER'S COPY

MSD 012036

Steve Grace Mallinckrodt 2112 0596-00

From: Steve Grace
Sent: Wednesday, October 21, 2009 4:53 PM
To: 'Meyer, Lisa A'
Subject: RE: Covidien Wastewater Approval Request

Hello Lisa,

A review of the attached analytical report indicates cyanide concentrations of the cleanout of wastewater from production in Building 97 meets the categorical pretreatment standards outlined in 40 CFR 439.37. Therefore, the wastewater represented by sample IDs Tote 1A and Tote 2A are approved for discharge to your PEG system prior to discharge to the District. As a condition of this approval, you must notify us of any changes that would affect the characteristics of this discharge. All other conditions of the original approval remain in effect.

Please contact me at (314) 436-8755 with questions or comments.

Thank you,
Steve Grace

From: Meyer, Lisa A [mailto:Lisa.Meyer@Covidien.com]
Sent: Wednesday, October 21, 2009 1:30 PM
To: Steve Grace
Subject: Covidien Wastewater Approval Request

Steve,
I have attached the analysis from the final two totes of wastewater from production in Building 97. Cyanide result is as follows:

Tote 1A <7.00 mg/l

Tote 2A <7.00 mg/l

We would like to request approval for the discharge of the two totes (approximately 400 gallons) to the PEG system for treatment and discharge to MSD.

Thank you.

Lisa

Lisa Meyer
Senior HSE Engineer
Covidien
Mallinckrodt
3600 North Second Street
St. Louis, MO 63147
USA

TEKLAB, INC.

5445 HORSESHOE LAKE ROAD
COLLINSVILLE, ILLINOIS 62234

ENVIRONMENTAL TESTING LABORATORY

TEL: 618-344-1004
FAX: 618-344-1005

October 20, 2009

Lisa Meyer
Mallinckrodt Inc.
3600 N. 2nd St.
St. Louis, MO 63147
TEL: (314) 654-3374
FAX: (314) 654-1251

ACCREDITED IN ACCORDANCE WITH nelac

NELAP Accredited #100226

RE: Cyanide Sample

WorkOrder: 09100723

Dear Lisa Meyer:

TEKLAB, INC received 2 samples on 10/19/2009 10:14:00 AM for the analysis presented in the following report.

Samples are analyzed on an as received basis unless otherwise requested and documented. The sample results contained in this report relate only to the requested analytes of interest as directed on the chain of custody. IL ELAP and NELAP accredited fields of testing are indicated by the letters NELAP under the Certification column.

All quality control criteria applicable to the test methods employed for this project have been satisfactorily met and are in accordance with NELAP except where noted. The following report shall not be reproduced, except in full, without the written approval of Teklab, Inc.

If you have any questions regarding these tests results, please feel free to call.

Sincerely,

Heather A. White

Heather A. White
Project Manager
(618)344-1004 ex 20

TEKLAB, INC.

5445 HORSESHOE LAKE ROAD
COLLINSVILLE, ILLINOIS 62234

ENVIRONMENTAL TESTING LABORATORY

TEL: 618-344-1004
FAX: 618-344-1005

Client: Mallinckrodt Inc.
Project: Cyanide Sample
LabOrder: 09100723
Report Date: 20-Oct-09

CASE NARRATIVE

Cooler Receipt Temp: 21.2 °C

State accreditations:

KS: NELAP #E-10347 | KY: UST #0073 | MO: DNR #00930 | AR: ADEQ #70-028-0

Qualifiers

DF - Dilution Factor	**B** - Analyte detected in the associated Method Blank	**C** - Client requested RL below PQL
RL - Reporting Limit	**J** - Analyte detected below reporting limits	**D** - Diluted out of sample
ND - Not Detected at the Reporting Limit	**R** - RPD outside accepted recovery limits	**E** - Value above quantitation range
Surr - Surrogate Standard added by lab	**S** - Spike Recovery outside accepted recovery limits	**H** - Holding time exceeded
TNTC - Too numerous to count (> 200 CFU)	**X** - Value exceeds Maximum Contaminant Level	**MI** - Matrix interference
Q - QC criteria failed or noncompliant CCV	**#** - Unknown hydrocarbon	**DNI** - Did not ignite
NELAP - IL ELAP and NELAP Accredited Field of Testing	**IDPH** - IL Dept. of Public Health	

TEKLAB, INC.

5445 HORSESHOE LAKE ROAD
COLLINSVILLE, ILLINOIS 62234

ENVIRONMENTAL TESTING LABORATORY

TEL: 618-344-1004
FAX: 618-344-1005

LABORATORY RESULTS

Client: Mallinckrodt Inc.
WorkOrder: 09100723
Lab ID: 09100723-001
Report Date: 20-Oct-09

Client Project: Cyanide Sample
Client Sample ID: Tote 1A
Collection Date: 10/18/2009
Matrix: AQUEOUS

Analyses	Certification	RL	Qual	Result	Units	DF	Date Analyzed	Analyst
EPA 335.4 R1.0 (TOTAL)								
Cyanide	NELAP	7.00		**< 7.00**	mg/L	1	10/19/2009 10:04:12 AM	RCE

Sample Narrative

TEKLAB, INC.

5445 HORSESHOE LAKE ROAD
COLLINSVILLE, ILLINOIS 62234

ENVIRONMENTAL TESTING LABORATORY

TEL: 618-344-1004
FAX: 618-344-1005

LABORATORY RESULTS

Client: Mallinckrodt Inc.
WorkOrder: 09100723
Lab ID: 09100723-002
Report Date: 20-Oct-09

Client Project: Cyanide Sample
Client Sample ID: Tote 2A
Collection Date: 10/16/2009
Matrix: AQUEOUS

Analyses	Certification	RL	Qual	Result	Units	DF	Date Analyzed	Analyst
EPA 335.4 R1.0 (TOTAL)								
Cyanide	NELAP	7.00		**< 7.00**	mg/L	1	10/19/2009 10:04:12 AM	RCE

Sample Narrative

TEKLAB, INC.

5445 HORSESHOE LAKE ROAD
COLLINSVILLE, ILLINOIS 62234

ENVIRONMENTAL TESTING LABORATORY

TEL: 618-344-1004
FAX: 618-344-1005

RECEIVING CHECK LIST

Client: Mallinckrodt Inc.
Project: Cyanide Sample
Lab Order: 09100723
Report Date: 20-Oct-09

Carrier: Andrew Frisbey

Received By: MLD

Completed by: Marvin L. Darling II
On: 19-Oct-09
Marvin L. Darling

Reviewed by: Elizabeth A. Hurley
On: 19-Oct-09
Elizabeth A. Hurley

Pages to follow: Chain of custody 1 Extra pages included 0

Shipping container/cooler in good condition?	Yes ☑	No ☐	Not Present ☐	Temp °C 21.2
Type of thermal preservation?	None ☑	Ice ☐	Blue Ice ☐	Dry Ice ☐
Chain of custody present?	Yes ☑	No ☐		
Chain of custody signed when relinquished and received?	Yes ☑	No ☐		
Chain of custody agrees with sample labels?	Yes ☑	No ☐		
Samples in proper container/bottle?	Yes ☑	No ☐		
Sample containers intact?	Yes ☑	No ☐		
Sufficient sample volume for indicated test?	Yes ☑	No ☐		
All samples received within holding time?	Yes ☑	No ☐		
Reported field parameters measured:	Field ☐	Lab ☐	NA ☑	
Container/Temp Blank temperature in compliance?	Yes ☐	No ☑		

When thermal preservation is required, samples are compliant with a temperature between 0.1°C - 6.0°C, or when samples are received on ice the same day as collected.

Water - VOA vials have zero headspace?	Yes ☐	No ☐	No VOA vials	☑
Water - TOX containers have zero headspace?	Yes ☐	No ☐	No TOX containers	☑
Water - pH acceptable upon receipt?	Yes ☑	No ☐		

Any No responses must be detailed below or on the COC.

The samples were out of temperature compliance upon receipt. Per Andrew Frisbey, proceed with analysis out of temperature compliance. MLDII 10/19/09

CHAIN OF CUSTODY

pg. 1 of 1 Work Order # 09100723

TEKLAB, INC. 5445 Horseshoe Lake Road ~ Collinsville, IL 62234 ~ Phone: (618) 344-1004 ~ Fax: (618) 344-1005

Client: Mallinckrodt / Covidien
Address: 3600 N. 2nd St.
City / State / Zip: St. Louis MO 63187
Contact: Lisa Meyer Phone:
E-Mail: Fax:

Samples on: ☐ Ice ☐ Blue Ice ☒ No Ice 21.2 °C
Preserved in: ☐ Lab ☒ Field MLDII 10/19/09
FOR LAB USE ONLY
Lab Notes:
OK per Andrew out of temp MLDII 10/19/09
Comments: RL = 9.4 mg/L or less of Cyanide
andrew.trisbey@covidien.com
for Sep. COC. MLDII 10/19/09

- Are these samples known to be involved in litigation? If yes, a surcharge will apply. ☐ Yes ☐ No
- Are these samples known to be hazardous? ☐ Yes ☒ No
- Are there any required reporting limits to be met on the requested analysis? If yes, please provide limits in comment section. ☐ Yes ☐ No

Project Name / Number:
Sample Collector's Name:
Results Requested: ☒ Standard ☒ 1-2 Day (100% Surcharge) ☐ Other_____ ☐ 3 Day (50% Surcharge)
Billing Instructions:

Lab Use Only	Sample Identification	Date/Time Sampled	UNPRES	HNO_3	NaOH	H_2SO_4	HCL	MeOH	$NaHSO_4$	Other	Water	Drinking Water	Soil	Sludge	Sp. Waste	Cyanide	
~~K~~	9.75-100 DD14 RR	10-17-09 / 0000			✓						✓					✓	Rush TAT per Andrew. MLDII 10/19/09
09100723-01	Tote 1A	10-18-09 / 0000			✓						✓					✓	
~~02~~	Tote 2A	10-16-09 / 0000			✓						✓					✓	

Relinquished By	Date / Time	Received By	Date / Time
Andrew Trisbey	10-19-09 / 1014	Maurice L. Darling II	10/19/09 1014

The individual signing this agreement on behalf of client acknowledges that he/she has read and understands the terms and conditions of this agreement, on the reverse side, and that he/she has the authority to sign on behalf of client.

WHITE & YELLOW – LAB PINK – SAMPLER'S COPY

MSD 012043

Steve Grace

From: Steve Grace
Sent: Tuesday, October 20, 2009 5:05 PM
To: 'Meyer, Lisa A'
Subject: RE: Covidien Cyanide Sample Approval Request

Hello Lisa,

A review of the attached analytical report indicates cyanide concentrations of the cleanout of wastewater from production in Building 97 meets the categorical pretreatment standards outlined in 40 CFR 439.37. Therefore, the wastewater represented by sample ID #9.75-100 D1014 RR is approved for discharge to your PEG system prior to discharge to the District. As a condition of this approval, you must notify us of any changes that would affect the characteristics of this discharge. All other conditions of the original approval remain in effect.

Please contact me at (314) 436-8755 with questions or comments.

Thank you,
Steve Grace

From: Meyer, Lisa A [mailto:Lisa.Meyer@Covidien.com]
Sent: Tuesday, October 20, 2009 1:06 PM
To: Steve Grace
Subject: Covidien Cyanide Sample Approval Request
Importance: High

Steve,
I have attached the analysis from the cleanout of wastewater from production in Building 97. Cyanide result is as follows:

9.75-100 D1014 RR <7.00 mg/l

We would like to request approval for the discharge of the tank cleanout wastewater (approximately 1200 gallons) to the PEG system for treatment and discharge to MSD.

We have two final 200 gallons Totes that we are waiting for analytical results and your approval that will conclude the special discharge permit.

Thank you.

Lisa

TEKLAB, INC.

5445 HORSESHOE LAKE ROAD
COLLINSVILLE, ILLINOIS 62234

ENVIRONMENTAL TESTING LABORATORY

TEL: 618-344-1004
FAX: 618-344-1005

October 20, 2009

Lisa Meyer
Mallinckrodt Inc.
3600 N. 2nd St.
St. Louis, MO 63147
TEL: (314) 654-3374
FAX: (314) 654-1251

ACCREDITED IN ACCORDANCE WITH nelac

NELAP Accredited #100226

RE: Cyanide Sample

WorkOrder: 09100722

Dear Lisa Meyer:

TEKLAB, INC received 1 sample on 10/19/2009 10:14:00 AM for the analysis presented in the following report.

Samples are analyzed on an as received basis unless otherwise requested and documented. The sample results contained in this report relate only to the requested analytes of interest as directed on the chain of custody. IL ELAP and NELAP accredited fields of testing are indicated by the letters NELAP under the Certification column.

All quality control criteria applicable to the test methods employed for this project have been satisfactorily met and are in accordance with NELAP except where noted. The following report shall not be reproduced, except in full, without the written approval of Teklab, Inc.

If you have any questions regarding these tests results, please feel free to call.

Sincerely,

Heather A. White

Heather A. White
Project Manager
(618)344-1004 ex 20

TEKLAB, INC.

5445 HORSESHOE LAKE ROAD
COLLINSVILLE, ILLINOIS 62234

ENVIRONMENTAL TESTING LABORATORY

TEL: 618-344-1004
FAX: 618-344-1005

Client: Mallinckrodt Inc.
Project: Cyanide Sample
LabOrder: 09100722
Report Date: 20-Oct-09

CASE NARRATIVE

Cooler Receipt Temp: 21.2 °C

State accreditations:

KS: NELAP #E-10347 | KY: UST #0073 | MO: DNR #00930 | AR: ADEQ #70-028-0

Qualifiers

DF - Dilution Factor	**B** - Analyte detected in the associated Method Blank	**C** - Client requested RL below PQL
RL - Reporting Limit	**J** - Analyte detected below reporting limits	**D** - Diluted out of sample
ND - Not Detected at the Reporting Limit	**R** - RPD outside accepted recovery limits	**E** - Value above quantitation range
Surr - Surrogate Standard added by lab	**S** - Spike Recovery outside accepted recovery limits	**H** - Holding time exceeded
TNTC - Too numerous to count (> 200 CFU)	**X** - Value exceeds Maximum Contaminant Level	**MI** - Matrix interference
Q - QC criteria failed or noncompliant CCV	**#** - Unknown hydrocarbon	**DNI** - Did not ignite
NELAP - IL ELAP and NELAP Accredited Field of Testing	**IDPH** - IL Dept. of Public Health	

TEKLAB, INC.

5445 HORSESHOE LAKE ROAD
COLLINSVILLE, ILLINOIS 62234

ENVIRONMENTAL TESTING LABORATORY

TEL: 618-344-1004
FAX: 618-344-1005

LABORATORY RESULTS

Client: Mallinckrodt Inc.
WorkOrder: 09100722
Lab ID: 09100722-001
Report Date: 20-Oct-09

Client Project: Cyanide Sample
Client Sample ID: 9.75-100 D1014 RR
Collection Date: 10/17/2009
Matrix: AQUEOUS

Analyses	Certification	RL	Qual	Result	Units	DF	Date Analyzed	Analyst
EPA 335.4 R1.0 (TOTAL)								
Cyanide	NELAP	7.00		**< 7.00**	mg/L	1	10/19/2009 10:04:12 AM	RCE

Sample Narrative

TEKLAB, INC.

5445 HORSESHOE LAKE ROAD
COLLINSVILLE, ILLINOIS 62234

ENVIRONMENTAL TESTING LABORATORY

TEL: 618-344-1004
FAX: 618-344-1005

RECEIVING CHECK LIST

Client: Mallinckrodt Inc.
Project: Cyanide Sample
Lab Order: 09100722
Report Date: 20-Oct-09

Carrier: Andrew Frisbey

Received By: MLD

Completed by: Marvin L. Darling II
On: 19-Oct-09
Marvin L. Darling

Reviewed by: Elizabeth A. Hurley
On: 19-Oct-09
Elizabeth A. Hurley

Pages to follow: Chain of custody 1 Extra pages included 0

Shipping container/cooler in good condition?	Yes ☑	No ☐	Not Present ☐	Temp °C 21.2
Type of thermal preservation?	None ☑	Ice ☐	Blue Ice ☐	Dry Ice ☐
Chain of custody present?	Yes ☑	No ☐		
Chain of custody signed when relinquished and received?	Yes ☑	No ☐		
Chain of custody agrees with sample labels?	Yes ☑	No ☐		
Samples in proper container/bottle?	Yes ☑	No ☐		
Sample containers intact?	Yes ☑	No ☐		
Sufficient sample volume for indicated test?	Yes ☑	No ☐		
All samples received within holding time?	Yes ☑	No ☐		
Reported field parameters measured:	Field ☐	Lab ☐	NA ☑	
Container/Temp Blank temperature in compliance?	Yes ☐	No ☑		

When thermal preservation is required, samples are compliant with a temperature between 0.1°C - 6.0°C, or when samples are received on ice the same day as collected.

Water - VOA vials have zero headspace?	Yes ☐	No ☐	No VOA vials	☑
Water - TOX containers have zero headspace?	Yes ☐	No ☐	No TOX containers	☑
Water - pH acceptable upon receipt?	Yes ☑	No ☐		

Any No responses must be detailed below or on the COC.

The sample was out of temperature compliance upon receipt. Per Andrew Frisbey, proceed with analysis out of temperature compliance. MLDII 10/19/09

CHAIN OF CUSTODY

pg. 1 of 1 Work Order # 09100722

TEKLAB, INC. 5445 Horseshoe Lake Road ~ Collinsville, IL 62234 ~ Phone: (618) 344-1004 ~ Fax: (618) 344-1005

Client: Mallinckrodt / Covidien
Address: 3600 N. 2nd St.
City / State / Zip: St. Louis MO 63147
Contact: Lisa Meyer Phone:
E-Mail: Fax:

Samples on: ☐ Ice ☐ Blue Ice ☒ No Ice 21.2 °C
Preserved in: ☐ Lab ☒ Field MLP 10/19/09
FOR LAB USE ONLY
Lab Notes:
OK per Andrew out of temp MLP 10/19/09
Comments: RL = 9.4 mg/L or less of Cyanide
andrew.trisley@covidien.com
Kow separate COC MLP 10/19/09

- Are these samples known to be involved in litigation? If yes, a surcharge will apply. ☐ Yes ☐ No
- Are these samples known to be hazardous? ☐ Yes ☒ No
- Are there any required reporting limits to be met on the requested analysis? If yes, please provide limits in comment section. ☐ Yes ☐ No

Project Name / Number:
Sample Collector's Name:
Results Requested: ☐ Standard ☒ 1-2 Day (100% Surcharge) ☐ Other_____ ☐ 3 Day (50% Surcharge)
Billing Instructions:

Lab Use Only	Sample Identification	Date/Time Sampled	UNPRES	HNO_3	NaOH	H_2SO_4	HCL	MeOH	$NaHSO_4$	Other	Water	Drinking Water	Soil	Sludge	Sp. Waste	Cyanide	RUSH
09100722-001	9.75-100 DO14 RR	10-17-09 / 0000			✓						✓					✓	Rush TAT per Andrew. MLP 10/19/09
↓	Tote 1A	10-18-09 / 0000			✓						✓					✓	
↓	Tote 2A	10-16-09 / 0000			✓						✓					✓	

Relinquished By	Date / Time	Received By	Date / Time
Andrew Trisley	10-19-09 / 1014	Maurice L. Dalung II	10/19/09 1014

The individual signing this agreement on behalf of client acknowledges that he/she has read and understands the terms and conditions of this agreement, on the reverse side, and that he/she has the authority to sign on behalf of client.

WHITE & YELLOW – LAB PINK – SAMPLER'S COPY

MSD 0112049

Steve Grace

From: Steve Grace
Sent: Tuesday, October 13, 2009 2:45 PM
To: 'Meyer, Lisa A'
Subject: RE: Covidien Special Discharge: Step 4 Wastewater

Hello Lisa,

A review of the attached analytical report indicates cyanide concentrations of the wastewater located in Tote 05 Aqueous Waste Water meets the categorical pretreatment standards outlined in 40 CFR 439.37. Therefore, the wastewater located in Tote 05 Aqueous Waste Water is approved for discharge to your PEG system prior to discharge to the District. As a condition of this approval, you must notify us of any changes that would affect the characteristics of this discharge. All other conditions of the original approval remain in effect.

Please contact me at (314) 436-8755 with questions or comments.

Thank you,
Steve Grace

From: Meyer, Lisa A [mailto:Lisa.Meyer@Covidien.com]
Sent: Tuesday, October 13, 2009 1:03 PM
To: Steve Grace
Subject: Covidien Special Discharge: Step 4 Wastewater
Importance: High

Steve,
I have attached the analysis from the third batch of wastewater from production in Building 97. Cyanide results are summarized as follows:

D03B Aqueous Waste Water Step 4	93.6 mg/l
D03C Aqueous Waste Water Step 4	47.9 mg/l
Tote 05 Aqueous Waste Water	<7.00 mg/l

We would like to request approval for the discharge of Tote 05 (200 gallons) to the PEG system for treatment and discharge to MSD. The wastewater as represented by the first two listed cyanide results will be disposed of as waste. Thank you.

Lisa

Lisa Meyer
Senior HSE Engineer
Covidien
Mallinckrodt
3600 North Second Street
St. Louis, MO 63147
USA

314.654.3374 office

314.848.3772 pager
314.654.1251 fax

Together we can make a difference. Consider the environment before choosing to print this message.

TEKLAB, INC.

5445 HORSESHOE LAKE ROAD
COLLINSVILLE, ILLINOIS 62234

ENVIRONMENTAL TESTING LABORATORY

TEL: 618-344-1004
FAX: 618-344-1005

October 13, 2009

Lisa Meyer
Mallinckrodt Inc.
3600 N. 2nd St.
St. Louis, MO 63147
TEL: (314) 654-3374
FAX: (314) 654-1251

ACCREDITED IN ACCORDANCE WITH nelac

NELAP Accredited #100226

RE: Step 4 Wastewater

WorkOrder: 09100489

Dear Lisa Meyer:

TEKLAB, INC received 3 samples on 10/12/2009 3:15:00 PM for the analysis presented in the following report.

Samples are analyzed on an as received basis unless otherwise requested and documented. The sample results contained in this report relate only to the requested analytes of interest as directed on the chain of custody. IL ELAP and NELAP accredited fields of testing are indicated by the letters NELAP under the Certification column.

All quality control criteria applicable to the test methods employed for this project have been satisfactorily met and are in accordance with NELAP except where noted. The following report shall not be reproduced, except in full, without the written approval of Teklab, Inc.

If you have any questions regarding these tests results, please feel free to call.

Sincerely,

Heather A. White

Heather A. White
Project Manager
(618)344-1004 ex 20

TEKLAB, INC.

5445 HORSESHOE LAKE ROAD
COLLINSVILLE, ILLINOIS 62234

ENVIRONMENTAL TESTING LABORATORY

TEL: 618-344-1004
FAX: 618-344-1005

Client: Mallinckrodt Inc.
Project: Step 4 Wastewater
LabOrder: 09100489
Report Date: 13-Oct-09

CASE NARRATIVE

Cooler Receipt Temp: 1.4 °C

State accreditations:

KS: NELAP #E-10347 | KY: UST #0073 | MO: DNR #00930 | AR: ADEQ #70-028-0

Qualifiers

DF - Dilution Factor	**B** - Analyte detected in the associated Method Blank	**C** - Client requested RL below PQL
RL - Reporting Limit	**J** - Analyte detected below reporting limits	**D** - Diluted out of sample
ND - Not Detected at the Reporting Limit	**R** - RPD outside accepted recovery limits	**E** - Value above quantitation range
Surr - Surrogate Standard added by lab	**S** - Spike Recovery outside accepted recovery limits	**H** - Holding time exceeded
TNTC - Too numerous to count (> 200 CFU)	**X** - Value exceeds Maximum Contaminant Level	**MI** - Matrix interference
Q - QC criteria failed or noncompliant CCV	**#** - Unknown hydrocarbon	**DNI** - Did not ignite
NELAP - IL ELAP and NELAP Accredited Field of Testing	**IDPH** - IL Dept. of Public Health	

TEKLAB, INC.

5445 HORSESHOE LAKE ROAD
COLLINSVILLE, ILLINOIS 62234

ENVIRONMENTAL TESTING LABORATORY

TEL: 618-344-1004
FAX: 618-344-1005

LABORATORY RESULTS

Client: Mallinckrodt Inc.
WorkOrder: 09100489
Lab ID: 09100489-001
Report Date: 13-Oct-09

Client Project: Step 4 Wastewater
Client Sample ID: D03B Aqueous Waste Water Step 4
Collection Date: 10/7/2009 3:30:00 PM
Matrix: WASTE WATER

Analyses	Certification	RL	Qual	Result	Units	DF	Date Analyzed	Analyst
EPA 335.4 R1.0 (TOTAL)								
Cyanide	NELAP	7.00		**93.6**	mg/L	1	10/13/2009 9:04:50 AM	RCE

Sample Narrative

TEKLAB, INC.

5445 HORSESHOE LAKE ROAD
COLLINSVILLE, ILLINOIS 62234

ENVIRONMENTAL TESTING LABORATORY

TEL: 618-344-1004
FAX: 618-344-1005

LABORATORY RESULTS

Client: Mallinckrodt Inc.
WorkOrder: 09100489
Lab ID: 09100489-002
Report Date: 13-Oct-09

Client Project: Step 4 Wastewater
Client Sample ID: D03C Aqueous Waste Water Step 4
Collection Date: 10/8/2009 3:00:00 PM
Matrix: WASTE WATER

Analyses	Certification	RL	Qual	Result	Units	DF	Date Analyzed	Analyst
EPA 335.4 R1.0 (TOTAL)								
Cyanide	NELAP	7.00		**47.9**	mg/L	1	10/13/2009 9:04:50 AM	RCE

Sample Narrative

TEKLAB, INC.

5445 HORSESHOE LAKE ROAD
COLLINSVILLE, ILLINOIS 62234

ENVIRONMENTAL TESTING LABORATORY

TEL: 618-344-1004
FAX: 618-344-1005

LABORATORY RESULTS

Client: Mallinckrodt Inc.
WorkOrder: 09100489
Lab ID: 09100489-003
Report Date: 13-Oct-09

Client Project: Step 4 Wastewater
Client Sample ID: Tote 05 Aqueous Waste Water
Collection Date: 10/12/2009 1:00:00 PM
Matrix: WASTE WATER

Analyses	Certification	RL	Qual	Result	Units	DF	Date Analyzed	Analyst
EPA 335.4 R1.0 (TOTAL)								
Cyanide	NELAP	7.00		**< 7.00**	mg/L	1	10/13/2009 9:04:50 AM	RCE

Sample Narrative

TEKLAB, INC.

5445 HORSESHOE LAKE ROAD
COLLINSVILLE, ILLINOIS 62234

ENVIRONMENTAL TESTING LABORATORY

TEL: 618-344-1004
FAX: 618-344-1005

RECEIVING CHECK LIST

Client: Mallinckrodt Inc.
Project: Step 4 Wastewater
Lab Order: 09100489
Report Date: 13-Oct-09

Carrier: Marvin Darling II

Received By: DB

Completed by: Elizabeth A. Hurley
On: 12-Oct-09
Elizabeth A. Hurley

Reviewed by: Heather A. White
On: 12-Oct-09
Heather A. White

Pages to follow: Chain of custody 1 Extra pages included 0

Shipping container/cooler in good condition?	Yes ☑	No ☐	Not Present ☐	Temp °C 1.4
Type of thermal preservation?	None ☐	Ice ☑	Blue Ice ☐	Dry Ice ☐
Chain of custody present?	Yes ☑	No ☐		
Chain of custody signed when relinquished and received?	Yes ☑	No ☐		
Chain of custody agrees with sample labels?	Yes ☑	No ☐		
Samples in proper container/bottle?	Yes ☑	No ☐		
Sample containers intact?	Yes ☑	No ☐		
Sufficient sample volume for indicated test?	Yes ☑	No ☐		
All samples received within holding time?	Yes ☑	No ☐		
Reported field parameters measured:	Field ☐	Lab ☐	NA ☑	
Container/Temp Blank temperature in compliance?	Yes ☑	No ☐		
When thermal preservation is required, samples are compliant with a temperature between 0.1°C - 6.0°C, or when samples are received on ice the same day as collected.				
Water - VOA vials have zero headspace?	Yes ☐	No ☐	No VOA vials ☑	
Water - TOX containers have zero headspace?	Yes ☐	No ☐	No TOX containers ☑	
Water - pH acceptable upon receipt?	Yes ☑	No ☐		

Any No responses must be detailed below or on the COC.

CHAIN OF CUSTODY

pg. 1 of 1 Work Order # 0910 0489

TEKLAB, INC. 5445 Horseshoe Lake Road ~ Collinsville, IL 62234 ~ Phone: (618) 344-1004 ~ Fax: (618) 344-1005

Client: Mallinckrodt / Covidien
Address: 3600 N. 2nd ST.
City / State / Zip: ST Louis MO 63187
Contact: Lisa Meyer Phone:
E-Mail: Fax:

Samples on: ☒ Ice ☐ Blue Ice ☐ No Ice 1.4 °C
Preserved in: ☐ Lab ☒ Field DB 10/12/09
FOR LAB USE ONLY
Lab Notes: Teklab, Inc. Courier Pick Up

Comments: RL = 9.4 mg/L or Less of Cyanide
*may contain chlorine + - D03B / D03C per Lisa Meyer.

- Are these samples known to be involved in litigation? If yes, a surcharge will apply. ☐ Yes ☒ No
- Are these samples known to be hazardous? ☐ Yes ☒ No
- Are there any required reporting limits to be met on the requested analysis? If yes, please provide limits in comment section. ☒ Yes ☐ No

Project Name / Number: Step 4 Wastewater
Sample Collector's Name:
Results Requested: ☐ Standard ☒ 1-2 Day (100% Surcharge) ☐ Other_____ ☐ 3 Day (50% Surcharge)
Billing Instructions:

INDICATE ANALYSIS REQUESTED SAH 10/12/09

Lab Use Only	Sample Identification	Date/Time Sampled	UNPRES	HNO_3	NaOH	H_2SO_4	HCL	MeOH	$NaHSO_4$	Other	Water	Drinking Water	Soil	Sludge	Sp. Waste	Cyanide
M100489-001	D03B Aqueous Waste Water Step 4	10-07-09 1530			✓						✓					✓
002	D03C Aqueous Waste Water Step 4	10-08-09 1500			✓						✓					✓
003	Tote 05 Aqueous Waste Water	10-12-09 1300			✓						✓					✓

Relinquished By	Date / Time	Received By	Date / Time
Lisa Meyer	10/12/09 1408	Marvin L. Darling II	10/12/09 1408
Marvin L. Darling II	10/12/09 1515	[illegible]	10/12/09 1515

The individual signing this agreement on behalf of client acknowledges that he/she has read and understands the terms and conditions of this agreement, on the reverse side, and that he/she has the authority to sign on behalf of client.

WHITE & YELLOW – LAB PINK – SAMPLER'S COPY

MSD 012058

Steve Grace

From: Steve Grace
Sent: Monday, October 12, 2009 8:46 AM
To: 'Meyer, Lisa A'
Subject: RE: WO#09100294 Cyanide Destruct
Attachments: image001.jpg

Hello Lisa,

A review of the attached analytical report indicates cyanide concentrations of the wastewater located in Cyanide Sample Tote #2, Cyanide Sample Tote #3, and Cyanide Sample Tote #4 meet the categorical pretreatment standards outlined in 40 CFR 439.37. Therefore, the wastewater located in Sample Tote #2, Cyanide Sample Tote #3, and Cyanide Sample Tote #4 are approved for discharge to your PEG system prior to discharge to the District. As a condition of this approval, you must notify us of any changes that would affect the characteristics of this discharge. All other conditions of the original approval remain in effect.

Please contact me at (314) 436-8755 with questions or comments.

Thank you,
Steve Grace

From: Meyer, Lisa A [mailto:Lisa.Meyer@Covidien.com]
Sent: Friday, October 09, 2009 4:05 PM
To: Steve Grace
Subject: FW: WO#09100294 Cyanide Destruct
Importance: High

Steve,
Here are the next set of results for the cyanide wastewater. To summarize:

- Two samples, Aqueous layer from step iv cyanide and cyanide sample DO3A exceeded our limit and will not be discharged to MSD
- Cyanide Sample Tote #2 (200 gallons) 6.3 mg/l
- Cyanide Sample Tote #3 (200 gallons) <7.0 mg/l
- Cyanide Sample Tote #4 (200 gallons) <7.0 mg/l

We are requesting approval for the three Totes (2,3 &4) to be discharged to our PEG treatment system and then discharged to MSD. Thank you.

Lisa

From: Heather A. White [mailto:HWhite@teklabinc.com]
Sent: Friday, October 09, 2009 2:28 PM
To: DeWald, Jeff; Summers, Julie; Meyer, Lisa A
Subject: WO#09100294 Cyanide Destruct

We appreciate your business!

Heather White
Project Manager

Teklab, Inc.
5445 Horseshoe Lake Road
Collinsville, IL 62234
Phone: 618.344.1004 Ext. 20
Fax: 618.344.1005

Confidentiality Notice: The information contained in this message is intended only for the use of the addressee, and may be confidential and/or privileged. If the reader of this message is not the intended recipient, or the employee or agent responsible to deliver it to the intended recipient, you are hereby notified that any dissemination, distribution or copying of this communication is strictly prohibited. If you have received this communication in error, please notify the sender immediately

TEKLAB, INC.

5445 HORSESHOE LAKE ROAD
COLLINSVILLE, ILLINOIS 62234

ENVIRONMENTAL TESTING LABORATORY

TEL: 618-344-1004
FAX: 618-344-1005

October 09, 2009

Lisa Meyer
Mallinckrodt Inc.
3600 N. 2nd St.
St. Louis, MO 63147
TEL: (314) 654-3374
FAX: (314) 654-1251

ACCREDITED IN ACCORDANCE WITH nelac

NELAP Accredited #100226

RE: Cyanide Destruct

WorkOrder: 09100294

Dear Lisa Meyer:

TEKLAB, INC received 5 samples on 10/7/2009 3:07:00 PM for the analysis presented in the following report.

Samples are analyzed on an as received basis unless otherwise requested and documented. The sample results contained in this report relate only to the requested analytes of interest as directed on the chain of custody. IL ELAP and NELAP accredited fields of testing are indicated by the letters NELAP under the Certification column.

All quality control criteria applicable to the test methods employed for this project have been satisfactorily met and are in accordance with NELAP except where noted. The following report shall not be reproduced, except in full, without the written approval of Teklab, Inc.

If you have any questions regarding these tests results, please feel free to call.

Sincerely,

Heather A. White

Heather A. White
Project Manager
(618)344-1004 ex 20

TEKLAB, INC.

5445 HORSESHOE LAKE ROAD
COLLINSVILLE, ILLINOIS 62234

ENVIRONMENTAL TESTING LABORATORY

TEL: 618-344-1004
FAX: 618-344-1005

Client: Mallinckrodt Inc.
Project: Cyanide Destruct
LabOrder: 09100294
Report Date: 09-Oct-09

CASE NARRATIVE

Cooler Receipt Temp: 1.8 °C

State accreditations:

KS: NELAP #E-10347 | KY: UST #0073 | MO: DNR #00930 | AR: ADEQ #70-028-0

Qualifiers

DF - Dilution Factor	**B** - Analyte detected in the associated Method Blank	**C** - Client requested RL below PQL
RL - Reporting Limit	**J** - Analyte detected below reporting limits	**D** - Diluted out of sample
ND - Not Detected at the Reporting Limit	**R** - RPD outside accepted recovery limits	**E** - Value above quantitation range
Surr - Surrogate Standard added by lab	**S** - Spike Recovery outside accepted recovery limits	**H** - Holding time exceeded
TNTC - Too numerous to count (> 200 CFU)	**X** - Value exceeds Maximum Contaminant Level	**MI** - Matrix interference
Q - QC criteria failed or noncompliant CCV	**#** - Unknown hydrocarbon	**DNI** - Did not ignite
NELAP - IL ELAP and NELAP Accredited Field of Testing	**IDPH** - IL Dept. of Public Health	

TEKLAB, INC.

5445 HORSESHOE LAKE ROAD
COLLINSVILLE, ILLINOIS 62234

ENVIRONMENTAL TESTING LABORATORY

TEL: 618-344-1004
FAX: 618-344-1005

LABORATORY RESULTS

Client: Mallinckrodt Inc.
WorkOrder: 09100294
Lab ID: 09100294-001
Report Date: 09-Oct-09

Client Project: Cyanide Destruct
Client Sample ID: Aqueous Layer from Step IV Cyanide
Collection Date: 9/30/2009
Matrix: AQUEOUS

Analyses	Certification	RL	Qual	Result	Units	DF	Date Analyzed	Analyst
EPA 335.4 R1.0 (TOTAL)								
Cyanide	NELAP	7.00		**47.2**	mg/L	1	10/9/2009 9:50:02 AM	RCE

Sample Narrative

TEKLAB, INC.

5445 HORSESHOE LAKE ROAD
COLLINSVILLE, ILLINOIS 62234

ENVIRONMENTAL TESTING LABORATORY

TEL: 618-344-1004
FAX: 618-344-1005

LABORATORY RESULTS

Client: Mallinckrodt Inc.
WorkOrder: 09100294
Lab ID: 09100294-002
Report Date: 09-Oct-09

Client Project: Cyanide Destruct
Client Sample ID: Cyanide Sample DO3A
Collection Date: 10/7/2009 1:00:00 AM
Matrix: AQUEOUS

Analyses	Certification	RL	Qual	Result	Units	DF	Date Analyzed	Analyst
EPA 335.4 R1.0 (TOTAL)								
Cyanide	NELAP	7.00		**60.2**	mg/L	1	10/9/2009 9:50:02 AM	RCE

Sample Narrative

TEKLAB, INC.

5445 HORSESHOE LAKE ROAD
COLLINSVILLE, ILLINOIS 62234

ENVIRONMENTAL TESTING LABORATORY

TEL: 618-344-1004
FAX: 618-344-1005

LABORATORY RESULTS

Client: Mallinckrodt Inc.
WorkOrder: 09100294
Lab ID: 09100294-003
Report Date: 09-Oct-09

Client Project: Cyanide Destruct
Client Sample ID: Cyanide Sample Tote #2
Collection Date: 10/6/2009 2:00:00 PM
Matrix: AQUEOUS

Analyses	Certification	RL	Qual	Result	Units	DF	Date Analyzed	Analyst
EPA 335.4 R1.0 (TOTAL)								
Cyanide	NELAP	7.00	J	**6.3**	mg/L	1	10/9/2009 9:50:02 AM	RCE

Sample Narrative

TEKLAB, INC.

5445 HORSESHOE LAKE ROAD
COLLINSVILLE, ILLINOIS 62234

ENVIRONMENTAL TESTING LABORATORY

TEL: 618-344-1004
FAX: 618-344-1005

LABORATORY RESULTS

Client: Mallinckrodt Inc.
WorkOrder: 09100294
Lab ID: 09100294-004
Report Date: 09-Oct-09

Client Project: Cyanide Destruct
Client Sample ID: Cyanide Sample Tote #4
Collection Date: 10/7/2009 10:00:00 AM
Matrix: AQUEOUS

Analyses	Certification	RL	Qual	Result	Units	DF	Date Analyzed	Analyst
EPA 335.4 R1.0 (TOTAL)								
Cyanide	NELAP	7.00		**< 7.00**	mg/L	1	10/9/2009 9:50:02 AM	RCE

Sample Narrative

TEKLAB, INC.

5445 HORSESHOE LAKE ROAD
COLLINSVILLE, ILLINOIS 62234

ENVIRONMENTAL TESTING LABORATORY

TEL: 618-344-1004
FAX: 618-344-1005

LABORATORY RESULTS

Client: Mallinckrodt Inc.
WorkOrder: 09100294
Lab ID: 09100294-005
Report Date: 09-Oct-09

Client Project: Cyanide Destruct
Client Sample ID: Cyanide Sample Tote #3
Collection Date: 10/7/2009 9:00:00 AM
Matrix: AQUEOUS

Analyses	Certification	RL	Qual	Result	Units	DF	Date Analyzed	Analyst
EPA 335.4 R1.0 (TOTAL)								
Cyanide	NELAP	7.00		**< 7.00**	mg/L	1	10/9/2009 9:50:02 AM	RCE

Sample Narrative

TEKLAB, INC.

5445 HORSESHOE LAKE ROAD
COLLINSVILLE, ILLINOIS 62234

ENVIRONMENTAL TESTING LABORATORY

TEL: 618-344-1004
FAX: 618-344-1005

RECEIVING CHECK LIST

Client: Mallinckrodt Inc.
Project: Cyanide Destruct
Lab Order: 09100294
Report Date: 09-Oct-09

Carrier: Terry Hattan

Received By: MLD

Completed by: Marvin L. Darling II
On: 07-Oct-09
Marvin L. Darling

Reviewed by: Elizabeth A. Hurley
On: 08-Oct-09
Elizabeth A. Hurley

Pages to follow: Chain of custody 1 Extra pages included 0

Shipping container/cooler in good condition?	Yes ☑	No ☐	Not Present ☐	Temp °C 1.8
Type of thermal preservation?	None ☐	Ice ☑	Blue Ice ☐	Dry Ice ☐
Chain of custody present?	Yes ☑	No ☐		
Chain of custody signed when relinquished and received?	Yes ☑	No ☐		
Chain of custody agrees with sample labels?	Yes ☑	No ☐		
Samples in proper container/bottle?	Yes ☑	No ☐		
Sample containers intact?	Yes ☑	No ☐		
Sufficient sample volume for indicated test?	Yes ☑	No ☐		
All samples received within holding time?	Yes ☑	No ☐		
Reported field parameters measured:	Field ☐	Lab ☐	NA ☑	
Container/Temp Blank temperature in compliance?	Yes ☑	No ☐		

When thermal preservation is required, samples are compliant with a temperature between 0.1°C - 6.0°C, or when samples are received on ice the same day as collected.

Water - VOA vials have zero headspace?	Yes ☐	No ☐	No VOA vials	☑
Water - TOX containers have zero headspace?	Yes ☐	No ☐	No TOX containers	☑
Water - pH acceptable upon receipt?	Yes ☐	No ☑		

Any No responses must be detailed below or on the COC.

Additional sodium hydroxide was needed in Cyanide Sample Tote #2 upon arrival at the laboratory. Cyanide Sample Totes #4 and #3 were acidic upon arrival at the laboratory. Lisa Meyer was notified of the initial pH via voicemail. MLDII 10/7/09

CHAIN OF CUSTODY

pg. 1 of 1 Work Order # 09100294

TEKLAB, INC. 5445 Horseshoe Lake Road ~ Collinsville, IL 62234 ~ Phone: (618) 344-1004 ~ Fax: (618) 344-1005

Client: Mallinckrodt / Covidien
Address: 3600 N. 2nd. ST
City / State / Zip: ST. Louis, MO, 63187
Contact: Lisa Meyer Phone:
E-Mail: Fax:

Samples on: ☒ Ice ☐ Blue Ice ☐ No Ice 1.8 °C
Preserved in: ☒ Lab ☐ Field FOR LAB USE ONLY
Lab Notes: Added NaOH to Tote #2 sample. Sample Tote #4 & Tote #2 were acidic upon arrival.
Rush TAT per Lisa Meyer MLD 10/7/09
Comments: RL = 9.4 mg/L or Less of Cyanide
Teklab, Inc.
Courier Pick Up

- Are these samples known to be involved in litigation? If yes, a surcharge will apply. ☐ Yes ☐ No
- Are these samples known to be hazardous? ☐ Yes ☐ No
- Are there any required reporting limits to be met on the requested analysis? If yes, please provide limits in comment section. ☐ Yes ☐ No

Project Name / Number:
Sample Collector's Name:
Results Requested: ☐ Standard ☒ 1-2 Day (100% Surcharge) ☐ Other_____ ☐ 3 Day (50% Surcharge)
Billing Instructions:

Lab Use Only	Sample Identification	Date/Time Sampled	UNPRES	HNO_3	NaOH	H_2SO_4	HCL	MeOH	$NaHSO_4$	Other	Water	Drinking Water	Soil	Sludge	Sp. Waste	Cyanide	1 DAY
09100294-01	Aqueous Layer from Step IV				✓						✓					✓	
	Cyanide Sample	D02 09-30-09															
-02	Cyanide Sample	D03A 10-7-09 0900			✓						✓					✓	
—	Cyanide Sample				✓						✓					✓	
-03	Tote #2	10-6-09 1400															
-04	Tote #4	10-07-09 10:00			✓						✓					✓	
-05	Tote #3	10-07-09 0900			✓						✓					✓	

Relinquished By	Date / Time	Received By	Date / Time
[signature]	10/7/09 1415	[signature]	10/7/09
[signature]	10/7/09 1507	Melinda L. Dolling	10/7/09 1507

The individual signing this agreement on behalf of client acknowledges that he/she has read and understands the terms and conditions of this agreement, on the reverse side, and that he/she has the authority to sign on behalf of client.

WHITE & YELLOW – LAB PINK – SAMPLER'S COPY

MSD 012069

Metropolitan St. Louis Sewer District

Division of Environmental Compliance
10 East Grand Avenue
St. Louis, MO 63147-2913
Phone: 314.768.6200 www.stlmsd.com

October 7, 2009

Lisa Meyer
MALLINCKRODT
3600 North Second St.
St. Louis, MO 63147

Dear Ms. Meyer:

We have reviewed your application dated October 6, 2009 requesting approval to discharge 200 gallons of wastewater to the Metropolitan St. Louis Sewer District for treatment. This wastewater is a 50% ethylene glycol solution from a tank jacket leak at Building 97 of the Mallinckrodt facility located at 3600 North Second Street, St. Louis, Missouri. We understand that the wastewater will be discharged through sampling point 010.

Based on the information you provided, this wastewater meets MSD Ordinance 12559 standards and is approved for discharge into a sanitary sewer on site. This approval is valid for 30 days from the date of this letter.

You must be certain the waste is discharged into a sanitary or combined sewer inlet only. This letter does not authorize any discharge to a separate storm sewer, or to any watercourse, as any such discharge would be in violation of state and federal laws. **Please notify me at the number below when the discharge is to commence.**

This discharge has been approved based upon the information you provided, and is subject to the conditions stated above. This approval may be revoked by the District at any time if any of the information is found to be incorrect, or if the conditions of this approval are violated. Also, if the discharge causes any operational or maintenance problem within the District's collection or treatment system, or results in violations of any conditions of the District's NPDES permit, Mallinckrodt will be considered responsible for damages.

If you have any questions, please call me at (314) 436-8755.

Sincerely,
METROPOLITAN ST. LOUIS SEWER DISTRICT

Steven M. Grace

Steve Grace
Environmental Assistant Engineer

bv

pc: Nora Estopare

File: IU, MALLINCKRODT INC [2112059600]

C1A

SD EVALUATION CHECKLIST - ON SITE

APPLICATION INFORMATION

Source Name: Mallinckrodt Inc. Evaluated by: SMG

Premise Address: 3600 N. 2nd St. Date: 10/7/09

Send approval letter to applicant

Application Dated: 10/6/09 Received: 10/6/09 All Requested Info. Received: 10/6/09

SOURCE FILING/DESCRIPTION

1 - Source in PIMS? (Y) / N

2 - If No, on IU Cross-Ref list? * Y / N

3 - If No, MSD Account # from E-CIS? Y / N

4 - If none, on "Source" list (pre-IMS)? ** Y / N

5 - If No, assigned SOUR# from PIMS.

* o:\costrecovery\cross reference xls file

** o:\costrecovery\sourlist xls file

SOURCE TYPE (circle): (IU) / Dead IU / SD

INDUSTRY ID: 21120596-00

Sample Point: No. Assigned: 814 Description: 50% ethylene glycol soln. from a tank jacket leak @ Bldg. 97

Normal WW flow from premise? N/A _____ ccf/month, 2,992,101 GPD, _____ GPH. from SP010

REGULATORY STATUS

Is waste a Hazardous Waste? (N) / Y

Categorical standards apply? (N) / Y

Contain PCB/ asbestos/ radioactive/ dioxin/ used oil? (N) / Y

Regulatory Agency Oversight? (N) / Y

DISCHARGE CONSIDERATIONS At MSD's connection:

Ordinance Limits (12559, p32) exceeded? (N) / Y

Ordinance other limits exceeded (dye, flash pt <140F, temp >140F, obstruction, nuisance foaming/odor, corrosion causing): (N) / Y

Water Quality Standard exceeded? (N) / Y

Fumes in sewer exceed PEL/TLV limits? (N) / Y

Vapors in sewer exceed 10% of LEL? (N) / Y

RECOMMENDATION: (APPROVE) / DENY (cc WWTP Mgr for timed discharge)

APPROVAL CONDITIONS:

Timed Discharge (COD/BOD/WQ/foam): (N) / Y Limit = _____ gal/hour

Require Treatment before Discharge? (N) / Y

Laboratory analysis fee due? (N) / Y $_____

SMR required? (N) / Y Frequency/analysis: _____

SMR log: (N/A) / Remediation.xls / Nonremediation.xls

Volume Billing applies (water unmetered or credited)? (N) / Y

Bill High Strength? (N) / Y Yes, If use >60,000 gal/month water ___and, > norm WW strgth

Surcharge calculation attached: (N/A) / N / Y

Expiration log updated: (N/A) / N / Y

O:\CostRecovery\Special Discharge\C1a.Checklist.doc

COVIDIEN

Facsimile Communication

To: Mr. Steve Grace

Company: MSD Environmental Compliance

Fax Number: 314.436.8766

Date: October 6, 2009

Number of Pages *(including cover sheet)*: 11

Health, Safety, Environmental

Lisa Meyer
Senior HSE Engineer

Covidien/Mallinckrodt
3600 N. Second St.
St. Louis, Missouri 63147

Telephone 314-654-3374
Facsimile 314-654-1251

- ☐ For your information
- X Please respond
- ☐ Urgent
- ☐ Confidential

Comments:

Dear Mr. Grace,

Attached please find an application for Special Discharge for 200 gallons of a 50% ethylene glycol and water solution from Building 97. If you have any questions or need additional information, please contact me.

Thank you,

Lisa Meyer

Metropolitan St. Louis Sewer District

Phone No. (314) 436-8710

Division of Environmental Compliance, 10 East Grand Avenue, St. Louis, Missouri 63147 Fax No. (314) 436-8766

APPLICATION FOR SPECIAL DISCHARGE APPROVAL

I. WASTEWATER SOURCE IDENTIFICATION:

Site Name: Mallinckrodt

Premise Address: 3600 North 2nd St.

City: St. Louis State: MO Zip: 63147

Owner: Mallinckrodt

Contact Person: Lisa Meyer

Title: Senior HSE Engineer

Phone: 314.654.3374 Fax: 314.654.1251

II. APPLICANT (mailing information):

Applicant Name: Lisa Meyer

Title: Senior HSE Engineer

Company Name: Mallinckrodt

Mailing Address: 3600 North 2nd St.

City: St. Louis State: MO Zip: 63147

Phone: 314.654.3374 Fax: 314.654.1251

III. A. MATERIAL TO BE DISCHARGED (check all applicable boxes):

1. Wastewater description/location: Building 97 Ethylene glycol / water
2. Process/activity generating wastewater: Building 97 tank jacket leak
3. Physical and chemical composition: List all constituents, and known or potentially present regulated contaminants below.

☐ See separate listing enclosed, and/or ☐ See analytical results enclosed, and/or ☑ Material Safety Data Sheet enclosed.

DESCRIPTION	RANGE	UNIT
Ethylene Glycol	50	%
Water	50	%

DESCRIPTION *(continued)*	RANGE	UNIT

4. Is this wastewater from a process subject to EPA's categorical standards in 40 CFR Subchapter N? ☐ Yes ☑ No
   a. If yes, the applicable standards are in: 40 CFR Part _____, Subpart _____ ☐ Existing source ☐ New source
5. Does this wastewater contain polychlorinated biphenyls, asbestos or radioactive material? ☐ Yes ☑ No
   a. If yes, describe: _____
6. Representative sample: ☐ Laboratory results attached, and/or ☐ Sample provided (1/2 gallon minimum, clear container)
   a. Sample collection point/location: _____ Collection method: _____
   b. Sampler's name/Co.: _____ Sample date/time: _____
   c. Attach chain of custody as available
7. Discharge will occur over the following time period: ☑ < 30 days ☐ ≥ Two years ☐ Other: _____
   a. Expected total volume of wastewater to be discharged over the time period above: 200 Gallons
   b. Proposed discharge volume: 200 Gallons, at a frequency of: ☑ One time ☐ Daily ☐ Weekly ☐ Monthly ☐ Once/three months ☐ Once/six months ☐ Other: _____
8. Pretreatment of wastewater prior to discharge: ☐ None ☑ Yes, describe: pH adjust at plant outfall SP010
   a. If yes, attach site plan, pretreatment system schematic, and design specifications.
9. Wastewater from a remediation project under: ☐ Superfund/CERCLA ☐ RCRA ☐ Voluntary program ☐ UST ☑ Not applicable
   a. If from a remediation project, briefly describe the past and present utilization of the property: _____

III.B. MATERIAL FROM UNDERGROUND STORAGE TANK SOURCE

☑ **Not applicable (go to Section IV)**

Please answer the following questions if you are requesting to discharge wastewater associated with an underground storage tank system.

1. a. Wastewater from: ☐ Inside UST(s) ☐ UST system pit ☐ Excavation outside UST system pit ☐ Monitoring well ☐ Groundwater remediation system

   b. UST project involves wastewater from: ☐ UST(s) closed in place ☐ UST(s) removed ☐ Remediation ☐ Upgrade ☐ Maintenance activities ☐ Well monitoring ☐ Other, explain: _____

   c. If wastewater is from a closure project, how long has UST(s) been out of service: _____ years

2. a. State assigned UST site identification number: _____ ☐ Not applicable

   b. Number of USTs affected: _____ ☐ Unknown

   c. For the UST(s) involved, their state identification number(s): _____ ☐ Not applicable

   d. Service Station Identification Number, as applicable: _____

3. Tank contents/former contents: ☐ Gasoline ☐ #2 diesel ☐ Used oil ☐ Unknown ☐ Other: _____

IV. DISCHARGE LOCATION

1. ☑ On-site. Describe proposed point of entry to sewer and the discharge rate (must be a sanitary or combined sewer): _____

   B97 plant sewer to main outfall SP010 Note: Range of discharge must not surcharge sewer line.

2. ☐ Haul to MSD Bissell Point Hauled Waste Receiving Station at 10 E. Grand, St. Louis, MO.

   a. Transporters Name: _____ and MSD Hauler ID Number: _____

   b. Hazardous Waste Certification:

   For wastewater which is hauled to MSD's Bissell Point Hauled Waste Receiving Station, I hereby certify that to the best of my knowledge and belief, the above hauled waste is not classified as a RCRA "hazardous waste" as defined by the MDNR in 10 CSR 25 or USEPA in 40 CFR Part 261.

   Applicant Name (print): _____

   Signature: _____ **Date:** _____

ADDITIONAL INFORMATION:

_____

_____

_____

_____

_____

_____

V. APPLICANT SIGNATURE AND CERTIFICATION

This application must be signed by the applicant: either the source contact, or a contractor or agent directly responsible for site activities.

I hereby certify that I am directly responsible for activities at the site regarding the wastewater to be discharged, and to the best of my knowledge and belief, based on appropriate inquiry, the information in this application is true, complete, and accurate. The samples or analyses submitted are representative of the materials to be discharged. If granted approval to discharge, I agree to abide by the MSD Ordinances, and all applicable federal, state and local regulations. I agree to pay the costs of any pre-approval analyses performed by MSD and to pay any applicable disposal charges for the volume and strength of the wastes discharged.

Applicant Name (print): Lisa Meyer

Signature: Lisa Meyer **Date:** 10/6/09

FOR MSD USE ONLY:

File Name: Mallinckrodt, Inc. ID No. 21120596-00 Sample Point No. 814

Steve Grace

From: Steve Grace
Sent: Tuesday, October 06, 2009 4:05 PM
To: 'Meyer, Lisa A'
Cc: Doug Mendoza
Subject: RE: Mallinckrodt Cyanide Analysis - Batch 1 Analytical

Hello Lisa,

A review of the attached analytical report indicates cyanide concentrations of the wastewater located in Tote IBC0142 meet the categorical pretreatment standards outlined in 40 CFR 439.37. Therefore, the wastewater located in Tote IBC0142 is approved for discharge to your PEG system prior to discharge to the District. As a condition of this approval, you must notify us of any changes that would affect the characteristics of this discharge. All other conditions of the original approval remain in effect.

Please contact me at (314) 436-8755 with questions or comments.

Thank you,
Steve Grace

From: Meyer, Lisa A [mailto:Lisa.Meyer@Covidien.com]
Sent: Tuesday, October 06, 2009 3:06 PM
To: Steve Grace
Subject: Mallinckrodt Cyanide Analysis - Batch 1 Analytical
Importance: High

Steve,
Per the conditions in our Special Discharge permit dated September 3, 2009 from application dated August 10, 2009, I am submitting cyanide analysis for your review and approval prior to discharge.

Analysis from the sample entitled DO1 Aqueous layer from Step IV showed cyanide results at 64.5 mg/l which exceeds our permit limits. This wastewater will be disposed of as hazardous waste.

Analysis from the sample entitled Tote IBC0142 showed cyanide results at <3.5 mg/l which is within our permit limits. We are requesting the approval of this wastewater (200 gallons) to be discharged to our PEG system and then to MSD.

Please advise if you approve of this discharge. Thank you.

Lisa

Lisa Meyer
Senior HSE Engineer
Covidien
Mallinckrodt
3600 North Second Street
St. Louis, MO 63147
USA

314.654.3374 office

314.848.3772 pager
314.654.1251 fax

Together we can make a difference. Consider the environment before choosing to print this message.

TEKLAB, INC.

5445 HORSESHOE LAKE ROAD
COLLINSVILLE, ILLINOIS 62234

ENVIRONMENTAL TESTING LABORATORY

TEL: 618-344-1004
FAX: 618-344-1005

October 05, 2009

Lisa Meyer
Mallinckrodt Inc.
3600 N. 2nd St.
St. Louis, MO 63147
TEL: (314) 654-3374
FAX: (314) 654-1251

ACCREDITED IN ACCORDANCE WITH nelac

NELAP Accredited #100226

RE: Step 4 Wastewater

WorkOrder: 09100049

Dear Lisa Meyer:

TEKLAB, INC received 2 samples on 10/1/2009 4:08:00 PM for the analysis presented in the following report.

Samples are analyzed on an as received basis unless otherwise requested and documented. The sample results contained in this report relate only to the requested analytes of interest as directed on the chain of custody. IL ELAP and NELAP accredited fields of testing are indicated by the letters NELAP under the Certification column.

All quality control criteria applicable to the test methods employed for this project have been satisfactorily met and are in accordance with NELAP except where noted. The following report shall not be reproduced, except in full, without the written approval of Teklab, Inc.

If you have any questions regarding these tests results, please feel free to call.

Sincerely,

Heather A. White

Heather A. White
Project Manager
(618)344-1004 ex 20

TEKLAB, INC.

5445 HORSESHOE LAKE ROAD
COLLINSVILLE, ILLINOIS 62234

ENVIRONMENTAL TESTING LABORATORY

TEL: 618-344-1004
FAX: 618-344-1005

Client: Mallinckrodt Inc.
Project: Step 4 Wastewater
LabOrder: 09100049
Report Date: 05-Oct-09

CASE NARRATIVE

Cooler Receipt Temp: 0.4 °C

State accreditations:

KS: NELAP #E-10347 | KY: UST #0073 | MO: DNR #00930 | AR: ADEQ #70-028-0

Qualifiers

DF - Dilution Factor	**B** - Analyte detected in the associated Method Blank	**C** - Client requested RL below PQL
RL - Reporting Limit	**J** - Analyte detected below reporting limits	**D** - Diluted out of sample
ND - Not Detected at the Reporting Limit	**R** - RPD outside accepted recovery limits	**E** - Value above quantitation range
Surr - Surrogate Standard added by lab	**S** - Spike Recovery outside accepted recovery limits	**H** - Holding time exceeded
TNTC - Too numerous to count (> 200 CFU)	**X** - Value exceeds Maximum Contaminant Level	**MI** - Matrix interference
Q - QC criteria failed or noncompliant CCV	**#** - Unknown hydrocarbon	**DNI** - Did not ignite
NELAP - IL ELAP and NELAP Accredited Field of Testing	**IDPH** - IL Dept. of Public Health	

TEKLAB, INC.

5445 HORSESHOE LAKE ROAD
COLLINSVILLE, ILLINOIS 62234

ENVIRONMENTAL TESTING LABORATORY

TEL: 618-344-1004
FAX: 618-344-1005

LABORATORY RESULTS

Client: Mallinckrodt Inc.
WorkOrder: 09100049
Lab ID: 09100049-001
Report Date: 05-Oct-09

Client Project: Step 4 Wastewater
Client Sample ID: DO1 Aqueous layer from Step IV
Collection Date: 9/25/2009 2:00:00 AM
Matrix: AQUEOUS

Analyses	Certification	RL	Qual	Result	Units	DF	Date Analyzed	Analyst
EPA 335.4 R1.0 (TOTAL)								
Cyanide	NELAP	3.50		**64.5**	mg/L	1	10/5/2009 12:11:35 PM	RCE

Sample Narrative

TEKLAB, INC.

5445 HORSESHOE LAKE ROAD
COLLINSVILLE, ILLINOIS 62234

ENVIRONMENTAL TESTING LABORATORY

TEL: 618-344-1004
FAX: 618-344-1005

LABORATORY RESULTS

Client: Mallinckrodt Inc.
WorkOrder: 09100049
Lab ID: 09100049-002
Report Date: 05-Oct-09

Client Project: Step 4 Wastewater
Client Sample ID: Tote IBC0142
Collection Date: 9/28/2009
Matrix: AQUEOUS

Analyses	Certification	RL	Qual	Result	Units	DF	Date Analyzed	Analyst
EPA 335.4 R1.0 (TOTAL)								
Cyanide	NELAP	3.50		**< 3.50**	mg/L	1	10/5/2009 12:11:35 PM	RCE

Sample Narrative

EPA 335.4 R1.0 (Total)

Elevated reporting limit due to sample composition.

TEKLAB, INC.

5445 HORSESHOE LAKE ROAD
COLLINSVILLE, ILLINOIS 62234

ENVIRONMENTAL TESTING LABORATORY

TEL: 618-344-1004
FAX: 618-344-1005

RECEIVING CHECK LIST

Client: Mallinckrodt Inc.
Project: Step 4 Wastewater
Lab Order: 09100049
Report Date: 05-Oct-09

Carrier: Terry Hattan

Received By: MLD

Completed by: Marvin L. Darling II
On: 01-Oct-09
Marvin L. Darling

Reviewed by: Heather A. White
On: 02-Oct-09
Heather A. White

Pages to follow: Chain of custody 1 Extra pages included 0

Shipping container/cooler in good condition?	Yes ☑	No ☐	Not Present ☐	Temp °C 0.4
Type of thermal preservation?	None ☐	Ice ☑	Blue Ice ☐	Dry Ice ☐
Chain of custody present?	Yes ☑	No ☐		
Chain of custody signed when relinquished and received?	Yes ☑	No ☐		
Chain of custody agrees with sample labels?	Yes ☑	No ☐		
Samples in proper container/bottle?	Yes ☑	No ☐		
Sample containers intact?	Yes ☑	No ☐		
Sufficient sample volume for indicated test?	Yes ☑	No ☐		
All samples received within holding time?	Yes ☑	No ☐		
Reported field parameters measured:	Field ☐	Lab ☐	NA ☑	
Container/Temp Blank temperature in compliance?	Yes ☑	No ☐		

When thermal preservation is required, samples are compliant with a temperature between 0.1°C - 6.0°C, or when samples are received on ice the same day as collected.

Water - VOA vials have zero headspace?	Yes ☐	No ☐	No VOA vials	☑
Water - TOX containers have zero headspace?	Yes ☐	No ☐	No TOX containers	☑
Water - pH acceptable upon receipt?	Yes ☑	No ☐		

Any No responses must be detailed below or on the COC.

CHAIN OF CUSTODY

pg. 1 of 1 Work Order # 09100049

TEKLAB, INC. 5445 Horseshoe Lake Road ~ Collinsville, IL 62234 ~ Phone: (618) 344-1004 ~ Fax: (618) 344-1005

Client: Mallinckrodt / Covi
Address: 3600 N. 2nd St
City / State / Zip: St. Louis, MO 63147
Contact: ~~Jim Steger~~ Lisa Meyer Phone:
E-Mail: Fax: —

Samples on: ☒ Ice ☐ Blue Ice ☐ No Ice 0.4 °C
Preserved in: ☐ Lab ☐ Field FOR LAB USE ONLY
Lab Notes:

Comments: RL = 9.4 mg/L or less of Cyanide
4 DAY

- Are these samples known to be involved in litigation? If yes, a surcharge will apply. ☐ Yes ☒ No
- Are these samples known to be hazardous? ☐ Yes ☒ No
- Are there any required reporting limits to be met on the requested analysis? If yes, please provide limits in comment section. ☒ Yes ☐ No

Project Name / Number: Step 4 Wastewater
Sample Collector's Name:
Results Requested: ☐ Standard ☒ 1-2 Day (100% Surcharge) ☐ Other_____ ☐ 3 Day (50% Surcharge)
Billing Instructions:

Teklab, Inc. Courier Pick Up

Lab Use Only	Sample Identification	Date/Time Sampled	# and Type of Containers: UNPRES	HNO_3	NaOH	H_2SO_4	HCL	MeOH	$NaHSO_4$	Other	MATRIX: Water	Drinking Water	Soil	Sludge	Sp. Waste	INDICATE ANALYSIS REQUESTED: Cyanide
09100049-01	D01 Aqueous Layer from Step IV	09-25-09/0200			✓						✓					✓
-02	Tote IBC0142	09-28-09/2400			✓						✓					✓

Relinquished By	Date / Time	Received By	Date / Time
L. Meyer	10/1/09 1515	[illegible]	10/1/09 1515
[illegible]	10/1/09 1608	Maureen A. Darling II	10/1/09 1608

The individual signing this agreement on behalf of client acknowledges that he/she has read and understands the terms and conditions of this agreement, on the reverse side, and that he/she has the authority to sign on behalf of client.

WHITE & YELLOW – LAB PINK – SAMPLER'S COPY

MSD 012082

Steve Grace

From: Steve Grace
Sent: Tuesday, October 06, 2009 10:07 AM
To: 'Perret, Mindy'
Cc: Skoba, Gwenan; Frerker, Ron MVS; DeYong, Neil; Roberts, Sonny
Subject: RE: Request for continuous discharge approval for City Property water

Hello Mindy,

Based on the information you provided and historical analytical results, your request for continuous discharge of BK-459 is granted. During the continuous discharge, we will require daily self monitoring for total suspended solids, total uranium by KPA, gross alpha, gross beta, and the complete isotopes. All other conditions remain in effect.

Please contact me with any questions or comments.

Thank you,
Steve Grace

From: Perret, Mindy [mailto:mindy.perret@shawgrp.com]
Sent: Monday, October 05, 2009 8:26 AM
To: Steve Grace; Roland Biehl
Cc: Skoba, Gwenan; Frerker, Ron MVS; DeYong, Neil; Roberts, Sonny
Subject: Request for continuos discharge approval for City Property water

Mr. Grace,
We have completed the first two City Property batches (BK-457 and BK-458), and just received data from a third (BK-459 attached). Based on such chemical and radiological data, we would like to request permission to discharge BK-459 and to use continuous discharge when conditions require it. Under normal conditions, we would sample and evaluate data before discharge. However, under continuous discharge we would operate as before in Plant 6, where samples are taken every 24hrs during discharge and tested for KPA and gross alpha for screening, followed by the complete isotopics. We will continue to use carbon filtration for any and all City Property water. If you have any questions pertaining to this request please feel free to contact myself, Gwenan Skoba, or Ron Frerker.

Thank you,
Mindy Perret
(314) 895-2113

****Internet Email Confidentiality Footer**** Privileged/Confidential Information may be contained in this message. If you are not the addressee indicated in this message (or responsible for delivery of the message to such person), you may not copy or deliver this message to anyone. In such case, you should destroy this message and notify the sender by reply email. Please advise immediately if you or your employer do not consent to Internet email for messages of this kind. Opinions, conclusions and other information in this message that do not relate to the official business of The Shaw Group Inc. or its subsidiaries shall be understood as neither given nor endorsed by it.
_____ The Shaw Group Inc. http://www.shawgrp.com

Sample ID	Date Logged	Date Analyzed	Batch ID	Lab ID	Volume Analyzed	Volume Unit	Sample Type	Analyte	Result	Error	Units	Method	MDA	Qualifier	Instrument Type	Sample Description	Sample Matrix
SLD118378TW	09/26/09	09/26/09	09ML0694	HISS	0	L	REG	GrossA	14.35	6.21	pCi/L	GAB	8.19		Tennelec	tw	water
SLD118378TW	09/26/09	09/26/09	09ML0694	HISS	0	L	DUP	GrossA	14.62	6.25	pCi/L	GAB	8.19		Tennelec	tw	water
SLD118378TW	09/26/09	09/26/09	09ML0694	HISS	0	L	REG	GrossB	0.37	6.85	pCi/L	GAB	11.73	U	Tennelec	tw	water
SLD118378TW	09/26/09	09/26/09	09ML0694	HISS	0	L	DUP	GrossB	4.21	7.06	pCi/L	GAB	11.73	U	Tennelec	tw	water
SLD118378TW	09/24/09	09/26/09	09ML0694	HISS	0	L	REG	lpha of TSS	17.60	6.59	pCi/L	GAB	8.19		Tennelec	tw	water
SLD118378TW	09/24/09	09/26/09	09ML0694	HISS	0	L	REG	3eta of TSS	-1.10	6.77	pCi/L	GAB	11.73	U	Tennelec	tw	water
SLD118378TW	09/25/09	09/25/09	09ML0694	HISS	1	mL	REG	TotalU	22.77	2.08	pCi/L	KPA	1.10		KPA	tw	water
SLD118378TW	09/25/09	09/25/09	09ML0694	HISS	1	mL	DUP	TotalU	22.77	2.08	pCi/L	KPA	1.10		KPA	tw	water
SLD118378TW	09/24/09	09/24/09	09ML0694	HISS	1		REG	pH	7.67		pH units	pH	0.10		Mettler SevenEa	tw	water
SLD118378TW	09/24/09	09/28/09	09ML0694	HISS	0	L	REG	RA-226	0.52	0.47	pCi/L	RaL	0.70	U	AlphaSpec	tw	water
SLD118378TW	09/24/09	09/30/09	09ML0694	HISS	0	L	REG	TH-228	0.21	0.24	pCi/L	ThL	0.19		AlphaSpec	tw	water
SLD118378TW	09/24/09	09/30/09	09ML0694	HISS	0	L	REG	TH-230	1.18	0.60	pCi/L	ThL	0.19		AlphaSpec	tw	water
SLD118378TW	09/24/09	09/30/09	09ML0694	HISS	0	L	REG	TH-232	0.19	0.00	pCi/L	ThL	0.19	U	AlphaSpec	tw	water
SLD118378TW	09/24/09	09/24/09	09ML0694	HISS	1	L	DUP	Suspended	7.80		mg/L	:AWW 16	0.76		Mettler XS204	tw	water
SLD118378TW	09/24/09	09/24/09	09ML0694	HISS	1	L	REG	Suspended	7.70		mg/L	:AWW 16	0.76		Mettler XS204	tw	water

MSD 012084

Batch Number: BK-459
Sample ID: SLD118378
Area: City Property

Rad Analyte	Result (pCi/L)	Release to Sewers - SLDS or SLAPS		
		10CFR20, App B, Table 3	SOR Fraction (10CFR20)	MDOH / MSD Permit
Gross Alpha[1]	14.35	N/A	-	3000
Gross α Filtrate	17.60			
Gross α, solids from 1.0-μ filter	-3.25			
Gross Beta	0.37	N/A	-	N/A
Total Uranium	22.77	3000	0.01	3000
Ra-226	0.52	600	0.00	10
Th-228	0.21	2000	0.00	2000
Th-230	1.18	1000	0.00	1000
Th-232	0.19	300	0.00	N/A
Ra-228[2]	0.21	600	0.00	30
SOR TOTAL			**0.01**	
Non-Rad Analytes				
MSD TSS (mg/L)[3]	7.70	N/A	-	Surcharge applies to TSS over 300
pH (standard units)	7.67	-	-	5.5-11.5

Note: BK-458 and BK-457 were sampled for Full Chemistry and submitted to MSD for City Property.

[1]Gross alpha used only in the absence of isotopic data for radium and thorium
[2]Ra-228 and Th-228 assumed to be in equilibrium
[3]TSS initially compared to the monthly average. TSS for Coldwater Creek addressed by the NPDES.
N/A--Not applicable

Metropolitan St. Louis Sewer District

Division of Environmental Compliance
10 East Grand Avenue
St. Louis, MO 63147-2913
Phone: 314.768.6200 www.stlmsd.com

October 6, 2009

Lisa Meyer
HS&E Engineer
MALLINCKRODT INC.
3600 N. 2nd Street
St. Louis, MO 63147

Re: Discharge Permit No: 2112059600 - 2.1
For premise at: 3600 North Second Street
St. Louis, MO 63147

Dear Ms. Meyer:

The Metropolitan St. Louis Sewer District Wastewater Discharge permit for the above premise expires on May 31, 2010. Under the terms of the permit, you must apply for renewal at least 180 days prior to the expiration date.

We have enclosed an Industrial User Questionnaire form and instructions. You also may download an electronic version from MSD's website at www.stlmsd.com. This questionnaire serves as your permit application. Please complete and return the questionnaire to us no later than December 01, 2009. You may skip Section G of the questionnaire. Please retain a copy for your files.

We will use the questionnaire and our records on your facility to prepare a draft permit. The draft permit will be sent to you for comment, prior to sending a final permit.

We appreciate your cooperation and support in helping us to comply with the federal regulations. If you have any questions or need assistance in completing the questionnaire, please contact me at 314.436.8756.

Sincerely,
METROPOLITAN ST. LOUIS SEWER DISTRICT

SM Rehmer

Scott M. Rehmer
Assistant Engineer

Enclosures: IUQ form, instructions

cc: Doug Mendoza
Jason Gill

SR
10-7

METROPOLITAN ST. LOUIS SEWER DISTRICT
INDUSTRIAL USER SELF MONITORING REPORT

PLEASE READ THE INSTRUCTIONS BEFORE COMPLETING THIS REPORT

PART I: IDENTIFYING INFORMATION

Company Name: MALLINCKRODT, INC.
Permit No: 07101002-00
Premise Address: 675 MCDONNELL BOULEVARD, HAZELWOOD, MISSOURI 63042

Monitoring Period: [ ] (JAN-MAR) [ ] (APR-JUNE) [X] (JULY-SEPT) [ ] (OCT-DEC)

Samples Collected By: WELLINGTON ENVIRONMENTAL CONSULTING AND CONSTRUCTION, INC.
Analyses Performed By: ENVIRONMETRICS

PART II: ANALYTICAL RESULTS OF SELF MONITORING

MSD SAMPLE POINT REFERENCE NUMBER ---------->		001						
DATES ON WHICH SAMPLES WERE COLLECTED---------->		8/18/09						
TIMES AT WHICH SAMPLES WERE COLLECTED---------->		9:20 a.m. - 3:35 p.m.						
PARAMETER	LIMIT	RECORD SAMPLE TYPES (G,C,M, OR E) AND RESULTS BELOW G = grab, C = composite, M = measured flow, E = estimated flow						UNITS
FLOW		E	79,890					GPD
BIOCHEMICAL OXYGEN DEMAND	****	C	41					mg/l
CHEMICAL OXYGEN DEMAND	****	C	129					mg/l
OIL & GREASE	200	G	8					mg/l
pH	BETWEEN 5.5-11.5	G	7.1					-
TEMPERATURE	60	G	25.3					°C
TOTAL SUSPENDED SOLIDS	****	C	71					mg/l
TOTAL TOXIC ORGANICS	5.52	G	0.058					
TIME AT WHICH GRAB SAMPLE WAS TAKEN-->			9:30 a.m.					

You must complete and sign the certification statements on the reverse side.

RECEIVED
OCT 0 5 2009
DIVISION OF
ENVIRONMENTAL COMPLIANCE

MSD 012087

TEKLAB, INC.

5445 HORSESHOE LAKE ROAD
COLLINSVILLE, ILLINOIS 62234

ENVIRONMENTAL TESTING LABORATORY

TEL: 618-344-1004
FAX: 618-344-1005

LABORATORY RESULTS

Client: Wellington Environmental
WorkOrder: 09080675
Lab ID: 09080675-001
Report Date: 24-Aug-09

Client Project: Mallinckrodt, Inc. 28745
Client Sample ID: SP001
Collection Date: 8/18/2009 3:35:00 PM
Matrix: AQUEOUS

Analyses	Certification	RL	Qual	Result	Units	DF	Date Analyzed	Analyst
EPA 1664A								
Hexane Extractable Material	NELAP	5		8	mg/L	1	8/18/2009 5:00:00 PM	MAB
EPA 600 410.4								
Chemical Oxygen Demand	NELAP	50		129	mg/L	1	8/20/2009 9:15:00 AM	HMH
EPA 600 624, VOLATILE ORGANIC COMPOUNDS BY GC/MS								
1,1,2-Trichloroethane	NELAP	5.0		ND	µg/L	1	8/18/2009 8:25:00 PM	CCF
1,2-Dichlorobenzene	NELAP	5.0		ND	µg/L	1	8/18/2009 8:25:00 PM	CCF
Chlorobenzene	NELAP	5.0		ND	µg/L	1	8/18/2009 8:25:00 PM	CCF
Chloroform	NELAP	5.0	J	2.0	µg/L	1	8/18/2009 8:25:00 PM	CCF
Dibromochloromethane	NELAP	5.0		ND	µg/L	1	8/18/2009 8:25:00 PM	CCF
Methylene chloride	NELAP	5.0		ND	µg/L	1	8/18/2009 8:25:00 PM	CCF
Toluene	NELAP	5.0		ND	µg/L	1	8/18/2009 8:25:00 PM	CCF
Surr: 1,2-Dichloroethane-d4		74.7-129		104.3	%REC	1	8/18/2009 8:25:00 PM	CCF
Surr: 4-Bromofluorobenzene		86-119		99.6	%REC	1	8/18/2009 8:25:00 PM	CCF
Surr: Dibromofluoromethane		81.7-123		100	%REC	1	8/18/2009 8:25:00 PM	CCF
Surr: Toluene-d8		84.3-114		96.2	%REC	1	8/18/2009 8:25:00 PM	CCF
EPA 600 625, SEMI-VOLATILE ORGANIC COMPOUNDS BY GC/MS								
Hexachlorobenzene	NELAP	0.016		ND	mg/L	2	8/21/2009 1:04:00 AM	DMH
Naphthalene	NELAP	0.016		ND	mg/L	2	8/21/2009 1:04:00 AM	DMH
Nitrobenzene	NELAP	0.016		ND	mg/L	2	8/21/2009 1:04:00 AM	DMH
Phenol	NELAP	0.008		0.010	mg/L	2	8/21/2009 1:04:00 AM	DMH
Surr: 2,4,6-Tribromophenol		27.7-149		104.0	%REC	2	8/21/2009 1:04:00 AM	DMH
Surr: 2-Fluorobiphenyl		44.9-116		98.4	%REC	2	8/21/2009 1:04:00 AM	DMH
Surr: 2-Fluorophenol		10.6-78.7		37.9	%REC	2	8/21/2009 1:04:00 AM	DMH
Surr: Nitrobenzene-d5		41.4-104		93.7	%REC	2	8/21/2009 1:04:00 AM	DMH
Surr: Phenol-d5		9.04-52.9		24.4	%REC	2	8/21/2009 1:04:00 AM	DMH
Surr: p-Terphenyl-d14		23.5-114		59.4	%REC	2	8/21/2009 1:04:00 AM	DMH
STANDARD METHODS 18TH ED. 2540 D								
Total Suspended Solids	NELAP	6		71	mg/L	1	8/18/2009 6:00:00 PM	MAB
STANDARD METHODS 18TH ED. 5210 B								
Biochemical Oxygen Demand	NELAP	5		41	mg/L	1	8/19/2009 3:20:00 PM	JMT

Sample Narrative

EPA 600 625, Semi-Volatile Organic Compounds by GC/MS

Elevated reporting limit due to high levels of target and/or non-target analytes.

RECEIVED
OCT 0 5 2009
DIVISION OF
ENVIRONMENTAL COMPLIANCE

METROPOLITAN ST. LOUIS SEWER DISTRICT
INDUSTRIAL USER RADIOACTIVE MATERIALS DISCHARGE REPORT

RT I: IDENTIFYING INFORMATION

mpany Name: MALLINCKRODT, INC.

rmit No: 0701002-00

emise Address: 675 McDonnell Blvd., Hazelwood, MO 63042

porting Period: ☐(JAN-MAR) ☐(APR-JUNE) ☒(JULY-SEPT) ☐(OCT-DEC)

RT II: RECORD OF DISPOSAL OF RADIOACTIVE MATERIALS TO THE SEWER SYSTEM

RADIONUCLIDE	ACTIVITY DISCHARGED (millicuries)
NONE	NONE
TOTAL ACTIVITY DISCHARGED:	

PART III: CERTIFICATION STATEMENTS

Place your initials in the box under item A.
Everyone must complete the information under items A & B and sign this report.

A. CERTIFICATION OF COMPLIANCE WITH STATE AND FEDERAL REGULATIONS

☒ I certify that to the best of my knowledge & belief, all requirements of 10 CFR Part 20.2003 and 19 CSR Part 20-10.090 governing disposal by release into sanitary sewage for material regulated by the Nuclear Regulatory Commission and the Missouri Department of Health, respectively, have been met for the period covered by this report.

B. RADIOACTIVE MATERIALS DISCHARGE REPORT CERTIFICATION

I certify under penalty of Law that this document and all attachments were prepared under my direction or supervision in accordance with a system designed to assure that qualified personnel properly gather and evaluate the information submitted. Based on my inquiry of the person or persons who manage the system, or those persons directly responsible for gathering the information, the information submitted is, to the best of my knowledge and belief, true, accurate, and complete. I am aware that there are significant penalties for submitting false information, including the possibility of fine and imprisonment for knowing violations.

Print/type name of signing official: John Snider

Title: RADIATION SAFETY OFFICER Telephone: 314-654-8868

Signature: Date: 10-2-2009

RECEIVED
OCT 0 5 2009
DIVISION OF
ENVIRONMENTAL COMPLIANCE

MSD 012089

'ART III: SPECIAL CERTIFICATION STATEMENTS

lased on the special conditions contained in your discharge permit you may be required to certify one or more of the following. Pl eview your permit and PLACE YOUR INITIALS IN THE BOXES NEXT TO THOSE CERTIFICATIONS WHICH ARE APPLICABLE TO YO 'ACILITY. If your permit contains so Special Conditions, then none of the certifications in Part III apply to you. GO ON TO PART IV.

. If your permit special conditions waive monitoring at any sample point(s) specified in your permit, you are required to make the following certification:
[ ] I certify, since the last discharge monitoring report, there has been no change in the character of the wastes discharged at sampling point(s) _____.

. If your permit special conditions waive monitoring at active connection points which are not specified as sample points in your permit, you are required to make the following certification:
[ ] I certify, since the last discharge monitoring report, there has been no change in the character of wastes discharged at those active connection points which are not specified in my permit.

. If your permit special conditions waive monitoring at inactive connection points, you are required to make the following certification:
[ ] I certify, since the permit issue date, there has been no change in the status of connection points identified as inactive. These points remain inactive and no discharge occurred during the period covered by this report.

). If your permit special conditions authorize grab sample collection in lieu of composite sampling at any sample point(s), you are required to make the following certification:
[ ] I certify the grab sample results in this report accurately represent our average daily discharge at sample point(s) 601.

. If your permit special conditions prohibit discharge of wastes which are subject to certain categorical pretreatment standards, you are required to make the following certification:
[ ] I certify that the permitted facility does not discharge any wastes which are subject to pretreatment standards in 40 CFR _____.

. Discharges subject to Pharmaceutical Categorical Standards (40CFR 439) can be exempted from limitations and monitoring for Total Cyanide at the Pharmaceutical sample point(s) subject to the following certification:
[ ] I certify that the cyanide is not used or generated in any pharmaceutical manufacturing process subject to Categorical Standards in 40 CFR 439.

3. Discharges Subject to Categorical Standards for Electroplating (40 CFR 413), Metal Finishing (40 CFR 433) or Electrical and Electronic Components (40 CFR 469) can be exempted from TTO monitoring only at the Electroplating, Metal Finishing or Electrical & Electronic Components sample point(s) subject to the following certification:
[ ] Based on my inquiry of the person or persons directly responsible for managing compliance with the permit limitation for total toxic organics (TTO), I certify that, to the best of my knowledge and belief, no dumping of concentrated toxic organics into the wastewaters has occurred since filing the last discharge monitoring report. I further certify that this facility is implementing the toxic organic management plan submitted to MSD.

'ART IV: GENERAL CERTIFICATION STATEMENTS

nitial statement A if it applies to you. Everyone must complete the information under statement B and sign this report.

A. Discharges at sample points subject only to MSD Ordinance limits can be exempted from TTO monitoring subject to the following certification:
[ ] In lieu of monitoring for TTO at sample point(s) _____, I certify that to the best of my knowledge and belief, no toxic organics have been used at this premise or discharged into the wastewaters since filing of the last discharge monitoring report.

3. DISCHARGE MONITORING REPORT CERTIFICATION

certify under penalty of Law that this document and all attachments were prepared under my direction or supervision in accordance with a system designed to assure that qualified personnel properly gather and evaluate the information submitted. Based on my inquiry of the person or persons who manage the system, or those persons directly responsible for gathering the information, the information submitted is, to the best of my knowledge and belief, true, accurate, and complete. I am aware that there are significant penalties for submitting false information, including the possibility of fine and imprisonment for knowing violations.

Print or type name of signing official: John Snider

Title: Sr. Safety Specialist / RSO

Telephone: (314) 654-8563

Signature: [signature]

Date: 10-5-09

OCT-07-2009 08:53 From: To:3144368753 P.2/2

Steve Grace

From: Steve Grace
Sent: Thursday, October 01, 2009 3:53 PM
To: 'Perret, Mindy'
Cc: Skoba, Gwenan; Frerker, Ron MVS
Subject: RE: City Property Batch 458

Hello Mindy,

Based on the laboratory analytical results provided, the second batch of wastewater from the new area on City Property site meets the applicable MSD permit requirements and is approved for discharge. As outlined in the previous approval letter and subsequent extensions, a maximum of 100,000 gallons of wastewater is allowed to be discharged in a 24-hour period. All other conditions of the previously mentioned approvals remain in effect.

Please contact me should you have any questions or require additional information.

Thank you,
Steve Grace

From: Perret, Mindy [mailto:mindy.perret@shawgrp.com]
Sent: Wednesday, September 30, 2009 2:24 PM
To: Steve Grace
Cc: Roland Biehl; Skoba, Gwenan; Frerker, Ron MVS
Subject: City Property Batch 458

Steve,
The results for City Property Batch 458 are attached for review. Batch 458 represents the second batch of water from City Property. The water will be discharged to MSD upon approval. Discharge will be limited to 100,000 gallons per day.

Thank you,
Mindy Perret
(314) 895-2113

****Internet Email Confidentiality Footer**** Privileged/Confidential Information may be contained in this message. If you are not the addressee indicated in this message (or responsible for delivery of the message to such person), you may not copy or deliver this message to anyone. In such case, you should destroy this message and notify the sender by reply email. Please advise immediately if you or your employer do not consent to Internet email for messages of this kind. Opinions, conclusions and other information in this message that do not relate to the official business of The Shaw Group Inc. or its subsidiaries shall be understood as neither given nor endorsed by it.
_____ The Shaw Group Inc. http://www.shawgrp.com

PRELIMINARY DATA

Case Narrative
LOT NUMBER: F9I160175

This report contains the analytical results for the sample received under chain of custody by TestAmerica St. Louis on September 16, 2009. This sample is associated with your St. Louis FUSRAP project.

The test results in this report meet all NELAP requirements for parameters in which accreditations are held by TestAmerica St. Louis. Any exceptions to NELAP requirements are noted in the case narrative. **TestAmerica St. Louis' Florida certification number is E87689.** The case narrative is an integral part of this report.

This report shall not be reproduced, except in full, without the written approval of the laboratory.

All chemical analysis results are based upon sample as received, wet weight, unless noted otherwise. All radiochemistry results are based upon sample as dried and ground with the exception of tritium, unless requested wet weight by the client.

Many radiochemistry methods utilize radioactive tracers or stable carriers to determine chemical yield for the analytical preparation steps. The QC limits for tracers are 30% - 110%, while the QC limits for carriers are 40% - 110%. Deviations from these limits are noted in the narrative below.

Observations/Nonconformances

Reference the chain of custody and condition upon receipt report for any variations on receipt conditions and temperature of samples on receipt.

PCBs by GC

Batch 9260227:

- The CCV surrogate recovery for PCAL659, PCAL670, PCAL681, and PCAL702 is outside the upper QC limits on the secondary column for DCB indicating a potential high bias for the surrogate in the associated samples. This column will be used as a confirmation column and thus no surrogate recoveries will be reported from this column.
- The MSD Recovery for Aroclor 1016 and Aroclor 1260 is outside QC limits. The MS/MSD RPD is not within method acceptance criteria.
- To perform an MS/MSD on a sample for organic extractables, the laboratory requires 3 liters of sample. Due to receiving less than the required three liters, the laboratory performed the MS/MSD extraction using half volume.

Affected Samples:
F9I160175 (1): SLD118377

Semivolatile Organics by GC/MS

Batch 9260228:

- The LCS recoveries for N-Nitrosodiphenylamine and Benzo(k)fluoranthene are outside the upper QC limit, indicating a potential positive bias for these analytes. These analytes were not observed above the reporting limit in the associated samples; therefore the sample data was not adversely affected by this excursion.
- The LCS surrogate recovery for Terphenyl-d14 is outside the upper QC limit. Surrogate recoveries were acceptable in the method blank, the associated sample, and the MS/MSD.
- The MS/MSD recovery for N-Nitrosodiphenylamine is outside the established QC limits. The RPD is not within method acceptance criteria for many analytes. A matrix interference is physically evident in the sample.

PRELIMINARY DATA

- To perform an MS/MSD on a sample for organic extractables, the laboratory requires 3 liters of sample. Due to receiving less than the required three liters, the laboratory performed the MS/MSD extraction using half volume.

Affected Samples:
F9I160175 (1): SLD118377

Volatile Organics by GC/MS

Batch 9267558:

- There was insufficient sample volume to perform MS/MSD analysis. A LCS/LCSD were performed to demonstrate accuracy and replicate precision.
- This sample was analyzed at a 5X dilution. The reporting limit was adjusted taking into account that the lowest point on the calibration curve is 0.5 ug/L and that the dilution factor is 5X. This lowers the reporting limit to 2.5 ug/L for most of the analytes.

Affected Samples:
F9I160175 (1): SLD118377

Metals by ICP

Batch 9263022:

- The sample was analyzed at a dilution for Strontium and Calcium due to high concentrations of target analytes. The reporting limit has been adjusted only for those targets reported from the dilution run.
- Beryllium and uranium were observed in the CCB at greater than 2X the MDL. Associated samples which are non-detect for the contaminant do not require re-analysis.
- The MS recovery for Calcium is outside the established QC limits. The said analyte concentration in the original sample is greater than four times the amount spiked, making percent recovery information ineffective. Method performance is demonstrated by acceptable LCS recovery.
- The MS recovery for Strontium is outside the established QC limits. The RPD is within method acceptance criteria indicating a possible matrix interference. Method performance is demonstrated by acceptable LCS recovery.

The serial dilution for Iron and Potassium is outside of method acceptance criteria indicating a potential matrix interference. All associated samples are flagged accordingly.

Affected Samples:
F9I160175 (1): SLD118377

PRELIMINARY DATA

Science Applications International Corp

Client Sample ID: SLD118377

GC/MS Volatiles

Lot-Sample #...: F9I160175-001 **Work Order #...:** LKV9Q1AC **Matrix.....:** WATER
Date Sampled...: 09/16/09 10:15 **Date Received..:** 09/16/09
Prep Date.....: 09/24/09 **Analysis Date..:** 09/24/09
Prep Batch #...: 9267558 **Analysis Time..:** 11:36
Dilution Factor: 5
Method.....: SW846 8260B

PARAMETER	RESULT	REPORTING LIMIT	UNITS
Acetone	**6.6 J,B**	**10**	**ug/L**
Benzene	ND	2.5	ug/L
Bromodichloromethane	ND	2.5	ug/L
Bromoform	ND	2.5	ug/L
Bromomethane	ND	5.0	ug/L
2-Butanone	ND	10	ug/L
Carbon disulfide	ND	2.5	ug/L
Carbon tetrachloride	ND	2.5	ug/L
Chlorobenzene	ND	2.5	ug/L
Dibromochloromethane	ND	2.5	ug/L
Chloroethane	ND	5.0	ug/L
Chloroform	ND	2.5	ug/L
Chloromethane	ND	5.0	ug/L
1,1-Dichloroethane	ND	2.5	ug/L
1,2-Dichloroethane	ND	2.5	ug/L
1,1-Dichloroethene	ND	2.5	ug/L
1,2-Dichloroethene (total)	ND	2.5	ug/L
1,2-Dichloropropane	ND	2.5	ug/L
cis-1,3-Dichloropropene	ND	2.5	ug/L
trans-1,3-Dichloropropene	ND	2.5	ug/L
Ethylbenzene	ND	2.5	ug/L
2-Hexanone	ND	10	ug/L
Methylene chloride	ND	2.5	ug/L
4-Methyl-2-pentanone	ND	10	ug/L
Styrene	ND	2.5	ug/L
1,1,2,2-Tetrachloroethane	ND	2.5	ug/L
Tetrachloroethene	ND	2.5	ug/L
Toluene	ND	2.5	ug/L
1,1,1-Trichloroethane	ND	2.5	ug/L
1,1,2-Trichloroethane	ND	2.5	ug/L
Trichloroethene	ND	2.5	ug/L
1,1,2-Trichloro-1,2,2-trifluoroethane	ND	2.5	ug/L
Vinyl chloride	ND	5.0	ug/L
Xylenes (total)	ND	2.5	ug/L

(Continued on next page)

PRELIMINARY DATA

Science Applications International Corp

Client Sample ID: SLD118377

GC/MS Volatiles

Lot-Sample #...: F9I160175-001 **Work Order #...:** LKV9Q1AC **Matrix.....:** WATER

SURROGATE	PERCENT RECOVERY	RECOVERY LIMITS
Toluene-d8	105	(72 - 117)
Dibromofluoromethane	93	(66 - 137)
1,2-Dichloroethane-d4	92	(58 - 144)
4-Bromofluorobenzene	111	(68 - 127)

NOTE(S):

J Estimated result. Result is less than RL.

B Method blank contamination. The associated method blank contains the target analyte at a reportable level.

PRELIMINARY DATA

Science Applications International Corp

Client Sample ID: SLD118377

GC/MS Semivolatiles

Lot-Sample #...: F9I160175-001 **Work Order #...:** LKV9Q1AD **Matrix.....:** WATER
Date Sampled...: 09/16/09 10:15 **Date Received..:** 09/16/09
Prep Date.....: 09/17/09 **Analysis Date..:** 09/19/09
Prep Batch #...: 9260228 **Analysis Time..:** 00:39
Dilution Factor: 1
Method.....: SW846 8270C

PARAMETER	RESULT	REPORTING LIMIT	UNITS
3-Methylphenol & 4-Methylphenol	ND	20	ug/L
Phenol	ND	10	ug/L
bis(2-Chloroethyl)-ether	ND	10	ug/L
2-Chlorophenol	ND	10	ug/L
1,3-Dichlorobenzene	ND	10	ug/L
1,4-Dichlorobenzene	ND	10	ug/L
1,2-Dichlorobenzene	ND	10	ug/L
2-Methylphenol	ND	10	ug/L
2,2'-oxybis (1-Chloropropane)	ND	10	ug/L
N-Nitrosodi-n-propyl-amine	ND	10	ug/L
Hexachloroethane	ND	10	ug/L
2-Methylnaphthalene	ND	10	ug/L
Nitrobenzene	ND	10	ug/L
Isophorone	ND	10	ug/L
2-Nitrophenol	ND	10	ug/L
2,4-Dimethylphenol	ND	10	ug/L
bis(2-Chloroethoxy) methane	ND	10	ug/L
2,4-Dichlorophenol	ND	10	ug/L
1,2,4-Trichloro-benzene	ND	10	ug/L
Naphthalene	ND	10	ug/L
4-Chloroaniline	ND	10	ug/L
Hexachlorobutadiene	ND	10	ug/L
4-Chloro-3-methylphenol	ND	10	ug/L
Hexachlorocyclopenta-diene	ND	10	ug/L
2,4,6-Trichloro-phenol	ND	10	ug/L
2,4,5-Trichloro-phenol	ND	10	ug/L
2-Chloronaphthalene	ND	10	ug/L
2-Nitroaniline	ND	10	ug/L
Dimethyl phthalate	ND	10	ug/L

(Continued on next page)

PRELIMINARY DATA

Science Applications International Corp

Client Sample ID: SLD118377

GC/MS Semivolatiles

Lot-Sample #...: F9I160175-001 **Work Order #...:** LKV9Q1AD **Matrix.....:** WATER

PARAMETER	RESULT	REPORTING LIMIT	UNITS
Acenaphthylene	ND	10	ug/L
2,6-Dinitrotoluene	ND	10	ug/L
3-Nitroaniline	ND	10	ug/L
Acenaphthene	ND	10	ug/L
2,4-Dinitrophenol	ND	50	ug/L
4-Nitrophenol	ND	25	ug/L
Dibenzofuran	ND	10	ug/L
2,4-Dinitrotoluene	ND	10	ug/L
Diethyl phthalate	ND	10	ug/L
Fluorene	ND	10	ug/L
4-Chlorophenyl phenyl ether	ND	10	ug/L
4-Nitroaniline	ND	10	ug/L
4,6-Dinitro-2-methylphenol	ND	50	ug/L
N-Nitrosodiphenylamine	ND	10	ug/L
4-Bromophenyl phenyl ether	ND	10	ug/L
Hexachlorobenzene	ND	10	ug/L
Pentachlorophenol	ND	50	ug/L
Phenanthrene	ND	10	ug/L
Anthracene	ND	10	ug/L
Carbazole	ND	10	ug/L
Fluoranthene	ND	10	ug/L
Pyrene	ND	10	ug/L
Butyl benzyl phthalate	ND	10	ug/L
Benzo(a)anthracene	ND	10	ug/L
3,3'-Dichlorobenzidine	ND	50	ug/L
Chrysene	ND	10	ug/L
bis(2-Ethylhexyl) phthalate	ND	10	ug/L
Di-n-butyl phthalate	ND	10	ug/L
Di-n-octyl phthalate	ND	10	ug/L
Benzo(b)fluoranthene	ND	10	ug/L
Benzo(k)fluoranthene	ND	10	ug/L
Benzo(a)pyrene	ND	10	ug/L
Indeno(1,2,3-cd)pyrene	ND	10	ug/L
Benzo(ghi)perylene	ND	10	ug/L
Dibenz(a,h)anthracene	ND	10	ug/L

(Continued on next page)

PRELIMINARY DATA

Science Applications International Corp

Client Sample ID: SLD118377

GC/MS Semivolatiles

Lot-Sample #...: F9I160175-001 **Work Order #...:** LKV9Q1AD **Matrix.....:** WATER

SURROGATE	PERCENT RECOVERY	RECOVERY LIMITS
2-Fluorophenol	45	(20 - 73)
Phenol-d5	29	(10 - 59)
Nitrobenzene-d5	71	(42 - 94)
2-Fluorobiphenyl	62	(33 - 101)
2,4,6-Tribromophenol	82	(42 - 109)
Terphenyl-d14	82	(40 - 113)

PRELIMINARY DATA

Science Applications International Corp

Client Sample ID: SLD118377

GC Semivolatiles

Lot-Sample #...: F9I160175-001 **Work Order #...:** LKV9Q1AE **Matrix.....:** WATER
Date Sampled...: 09/16/09 10:15 **Date Received..:** 09/16/09
Prep Date.....: 09/17/09 **Analysis Date..:** 09/18/09
Prep Batch #...: 9260227 **Analysis Time..:** 17:49
Dilution Factor: 1
Method.....: SW846 8082

PARAMETER	RESULT	REPORTING LIMIT	UNITS
Aroclor 1016	ND	1.0	ug/L
Aroclor 1221	ND	1.0	ug/L
Aroclor 1232	ND	1.0	ug/L
Aroclor 1242	ND	1.0	ug/L
Aroclor 1248	ND	1.0	ug/L
Aroclor 1254	ND	1.0	ug/L
Aroclor 1260	ND	1.0	ug/L
Aroclor 1262	ND	1.0	ug/L
Aroclor 1268	ND	1.0	ug/L

SURROGATE	PERCENT RECOVERY	RECOVERY LIMITS
Decachlorobiphenyl	80	(45 - 150)

PRELIMINARY DATA

TESTAMERICA-ST. LOUIS

Metals Data Reporting Form

Sample Results

Lab Sample ID: LKV9Q **Client ID:** SLD118377

Matrix: Water **Units:** ug/L **Prep Date:** 9/18/2009 **Prep Batch:** 9261091

Weight: 30 **Volume:** 30 **Percent Moisture:** NA

Element	WL/ Mass	MDL	Report Limit	Conc	Q	DF	Instr	Anal Date	Anal Time
Mercury	253.7	0.044	0.20	0.14	B	1	CVAA	9/18/2009	11:56

Comments: Lot #: F9I160175 Sample #: 1

Version 4.75.1

U Result is less than the IDL
B Result is between MDL and RL

Form 1 Equivalent

PRELIMINARY DATA

TESTAMERICA-ST. LOUIS

Metals Data Reporting Form

Sample Results

Lab Sample ID: LKV9Q **Client ID:** SLD118377

Matrix: Water **Units:** ug/L **Prep Date:** 9/20/2009 **Prep Batch:** 9263022

Weight: 50 **Volume:** 50 **Percent Moisture:** NA

Element	WL/ Mass	MDL	Report Limit	Conc	Q	DF	Instr	Anal Date	Anal Time
Aluminum	308.22	79.9	200	79.9	U	1	ICP	9/23/2009	16:18
Antimony	206.84	4.0	60.0	4.0	U	1	ICPST	9/23/2009	16:23
Arsenic	189.04	2.0	200	2.0	U	1	ICPST	9/23/2009	16:23
Barium	**493.41**	**4.0**	**50.0**	**59.4**		**1**	**ICPST**	**9/23/2009**	**16:23**
Beryllium	313.04	0.61	5.0	0.61	U	1	ICPST	9/23/2009	16:23
Boron	**249.68**	**10.8**	**100**	**277**		**1**	**ICP**	**9/23/2009**	**16:18**
Cadmium	226.50	0.91	5.0	0.91	U	1	ICPST	9/23/2009	16:23
Calcium	**317.93**	**530**	**5000**	**65300**	**N**	**5**	**ICPST**	**9/23/2009**	**16:55**
Chromium	267.76	3.1	10.0	3.1	U	1	ICPST	9/23/2009	16:23
Cobalt	228.62	4.0	50.0	4.0	U	1	ICPST	9/23/2009	16:23
Copper	324.75	4.6	25.0	4.6	U	1	ICPST	9/23/2009	16:23
Iron	**259.94**	**28.2**	**100**	**359**	**E**	**1**	**ICP**	**9/23/2009**	**16:18**
Lead	220.35	1.3	100	1.3	U	1	ICPST	9/23/2009	16:23
Lithium	670.79	9.6	50.0	9.6	U	1	ICP	9/23/2009	16:18
Magnesium	**279.08**	**132**	**1000**	**6220**		**1**	**ICPST**	**9/23/2009**	**16:23**
Manganese	**257.61**	**3.3**	**15.0**	**34.1**		**1**	**ICPST**	**9/23/2009**	**16:23**
Molybdenum	**202.03**	**5.0**	**40.0**	**15.4**	**B**	**1**	**ICPST**	**9/23/2009**	**16:23**
Nickel	231.60	13.3	40.0	13.3	U	1	ICPST	9/23/2009	16:23
Potassium	**766.49**	**1650**	**5000**	**7530**	**E**	**1**	**ICP**	**9/23/2009**	**16:18**
Selenium	196.03	2.7	200	2.7	U	1	ICPST	9/23/2009	16:23
Silver	328.07	6.0	10.0	6.0	U	1	ICPST	9/23/2009	16:23
Sodium	**589**	**324**	**1000**	**19200**		**1**	**ICP**	**9/23/2009**	**16:18**
Strontium	**421.55**	**2.7**	**25.0**	**1790**	**N**	**5**	**ICPST**	**9/23/2009**	**16:55**
Thallium	190.86	4.0	200	4.0	U	1	ICPST	9/23/2009	16:23
Uranium	**385.96**	**23.5**	**500**	**146**	**B**	**1**	**ICPST**	**9/23/2009**	**16:23**
Vanadium	292.40	4.1	50.0	4.1	U	1	ICPST	9/23/2009	16:23
Zinc	**213.86**	**5.2**	**20.0**	**68.1**		**1**	**ICPST**	**9/23/2009**	**16:23**

Comments: Lot #: F9I160175 Sample #: 1

Version 4.75.1

U Result is less than the IDL
B Result is between MDL and RL

Form 1 Equivalent

Lot# F9I190114

Chain of Custody Record

Ref 335

DO #: | PO #: | COC #: SE09162009-03TA

SAMPLING EVENT NAME: Downtown Vicinity Properties/MSD Compliance/City Property/City Property

SAMPLE CATEGORY CODE: 2

CONTRACTOR: Shaw Environmental, Inc.
PHONE NUMBER: (314)220-5373
CONTACT NAME: Mike Lyerla
DATA REVIEWER: Gwenan Skoba

LABORATORY: TestAmerica
ADDRESS: 13715 Rider Trail North, Earth City, MO 63045

REQUIRED TAT: 5 days

Page 1 of 1

# of containers this page: 7

Sample ID #		SDG #	Station	Date	Time	Depth/Flow/Vo	Matrix	PCBs	Semi-VOAs	VOAs	TAL Metals				Comments
SLD118377	TW		City Property	9/16/2009	10:15	1 gal	Liquid	A,B	C,D	E,F	G				MSD, Batch 458
															4x LG, 500P, 2x40

Special Instructions/ Comments: This water has already been filtered with a 1.0 micron filter.

☐ USACE ☐ SAIC
Witness:

Sample Category Codes (SCC)		Relinquished By:	Date:	Time:	Received By:	Date:	Time:
1. Verification	7. Breathing Zone	Michael C. Lyerla	9-16-09	1210	[illegible]	9-16-09	1210
2. Characterization/ MSD	8. Perimeter						
3. Waste Characterization	9. Prefered Path Invest						
4. Confirmation Screening	10. Investigation						
5. Hot Zone	11. Inaccess. Soils Eval.						
6. PDI	12. Enfiro. Monitoring/ Permit Compliance						

PRELIMINARY DATA

Test America St. Louis

MSD 012102

TestAmerica
THE LEADER IN ENVIRONMENTAL TESTING

Lot #(s): F9I160175

PRELIMINARY DATA

CONDITION UPON RECEIPT FORM

Client: Shaw

Quote No: 51099

COC/RFA No: SE09162009-037A

Initiated By: EW

Date: 335 9.16.09

Time: 1210

Shipping Information

Shipper: FedEx UPS DHL Courier Client Other: Multiple Packages: Y N

Shipping # (s):*

1.
2.
3.
4.
5.
6.
7.
8.
9.
10.

Sample Temperature (s):**

1. ambient
2.
3.
4.
5.
6.
7.
8.
9.
10.

*Numbered shipping lines correspond to Numbered Sample Temp lines

**Sample must be received at 4°C ± 2°C- If not, note contents below. Temperature variance does NOT affect the following: Metals-Liquid or Rad tests- Liquid or Solids

Condition (Circle "Y" for yes, "N" for no and "N/A" for not applicable):

1.	Y N	Are there custody seals present on the cooler?	8.	Y N	Are there custody seals present on bottles?
2.	Y N N/A	Do custody seals on cooler appear to be tampered with?	9.	Y N N/A	Do custody seals on bottles appear to be tampered with?
3.	Y N	Were contents of cooler frisked after opening, but before unpacking?	10.	Y N N/A	Was sample received with proper pH[1]? (If not, make note below)
4.	Y N	Sample received with Chain of Custody?	11.	Y N	Sample received in proper containers?
5.	Y N N/A	Does the Chain of Custody match sample ID's on the container(s)?	12.	Y N N/A	Headspace in VOA or TOX liquid samples? (If Yes, note sample ID's below)
6.	Y N	Was sample received broken?	13.	Y N N/A	Was Internal COC/Workshare received?
7.	Y N	Is sample volume sufficient for analysis?	14.	Y N N/A	Was pH taken by original TestAmerica lab?

[1] For DOE-AL (Pantex, LANL, Sandia) sites, pH of ALL containers received must be verified, EXCEPT VOA, TOX and soils.

Notes:

just collected

Corrective Action:

- ☐ Client Contact Name: Informed by:
- ☐ Sample(s) processed "as is"
- ☐ Sample(s) on hold until: If released, notify:

Project Management Review: VKomanko Date: 9/16/09

THIS FORM MUST BE COMPLETED AT THE TIME THE ITEMS ARE BEING CHECKED IN. IF ANY ITEM IS COMPLETED BY SOMEONE OTHER THAN THE INITIATOR, THEN THAT PERSON IS REQUIRED TO APPLY THEIR INITIAL AND THE DATE NEXT TO THAT ITEM.

ADMIN-0004, REVISED 10/21/08 \\Slsvr01\QA\FORMS\ST-LOUIS\ADMIN\Admin004 rev11.doc

Preliminary Data Report

Sample ID	Date Logged	Date Analyzed	Batch ID	Lab ID	Volume Analyzed	Volume Unit	Sample Type	Analyte	Result	Error	Units	Method	MDA	Qualifier	Instrument Type	Sample Description	Sample Matrix
09ML0666BLK	09/17/09	09/17/09	09ML0666	HISS	0.20	L	BLK	GrossA	6.09	1.94	pCi/L	GAB	4.59		Tennelec	09ml0666blk	blank
09ML0666BLK	09/17/09	09/17/09	09ML0666	HISS	0.20	L	BLK	GrossB	15.29	2.56	pCi/L	GAB	5.75		Tennelec	09ml0666blk	blank
09ML0666LCS	09/17/09	09/17/09	09ML0666	HISS	0.50	g	LCS	GrossA	97.19		%	GAB			Tennelec	09ml0666lcs	lcs
09ML0666LCS	09/17/09	09/17/09	09ML0666	HISS	0.10	g	LCS	GrossB	100.65		%	GAB			Tennelec	09ml0666lcs	lcs
SLD118377	09/17/09	09/17/09	09ML0666	HISS	0.10	L	DUP	GrossA	50.37	10.59	pCi/L	GAB	9.18		Tennelec	tw	water
SLD118377	09/17/09	09/17/09	09ML0666	HISS	0.10	L	REG	GrossA	52.53	10.83	pCi/L	GAB	9.18		Tennelec	tw	water
SLD118377	09/17/09	09/17/09	09ML0666	HISS	0.10	L	REG	GrossB	13.73	7.46	pCi/L	GAB	11.50		Tennelec	tw	water
SLD118377	09/17/09	09/17/09	09ML0666	HISS	0.10	L	DUP	GrossB	9.15	7.20	pCi/L	GAB	11.50	U	Tennelec	tw	water
SLD118377F	09/16/09	09/17/09	09ML0666	HISS	0.10	L	REG	GrossA	53.62	10.95	pCi/L	GAB	9.18		Tennelec	gab tss filtrate	water
SLD118377F	09/16/09	09/17/09	09ML0666	HISS	0.10	L	REG	GrossB	5.86	7.01	pCi/L	GAB	11.50	U	Tennelec	gab tss filtrate	water
09ML0666BLK	09/16/09	09/16/09	09ML0666	HISS	1.00	mL	BLK	TotalU	-0.60	-0.05	pCi/L	KPA	0.22	U	KPA	09ml0666blk	blank
09ML0666LCS	09/16/09	09/16/09	09ML0666	HISS	1.00	mL	LCS	TotalU	103.10		%	KPA			KPA	09ml0666lcs	lcs
SLD118377	09/16/09	09/16/09	09ML0666	HISS	1.00	mL	REG	TotalU	70.95	8.93	pCi/L	KPA	1.10		KPA	tw	water
SLD118377	09/16/09	09/16/09	09ML0666	HISS	1.00	mL	DUP	TotalU	71.50	9.00	pCi/L	KPA	1.10		KPA	tw	water
SLD118377	09/16/09	09/16/09	09ML0666	HISS	1.00		REG	pH	7.73		pH units	pH	0.10		Mettler SevenEa	tw	water
09ML0666BLK	09/17/09	09/17/09	09ML0666	HISS	0.10	L	BLK	RA-226	0.37	0.38	pCi/L	RaL	0.50	U	AlphaSpec	09ml0666blk	blank
09ML0666LCS	09/17/09	09/17/09	09ML0666	HISS	0.1021	L	LCS	RA-226	106.56		%	RaL			AlphaSpec	09ml0666lcs	lcs
SLD118377	09/16/09	09/17/09	09ML0666	HISS	0.10	L	DUP	RA-226	0.20	0.23	pCi/L	RaL	0.18		AlphaSpec	tw	water
SLD118377	09/16/09	09/17/09	09ML0666	HISS	0.10	L	REG	RA-226	0.29	0.30	pCi/L	RaL	0.39	U	AlphaSpec	tw	water
09ML0666BLK	09/17/09	09/17/09	09ML0666	HISS	0.10	L	BLK	TH-228	0.28	0.28	pCi/L	ThL	0.19		AlphaSpec	09ml0666blk	blank
09ML0666BLK	09/17/09	09/17/09	09ML0666	HISS	0.10	L	BLK	TH-230	0.88	0.53	pCi/L	ThL	0.42		AlphaSpec	09ml0666blk	blank
09ML0666BLK	09/17/09	09/17/09	09ML0666	HISS	0.10	L	BLK	TH-232	0.00	0.00	pCi/L	ThL	0.19	U	AlphaSpec	09ml0666blk	blank
09ML0666LCS	09/17/09	09/17/09	09ML0666	HISS	0.2533	L	LCS	TH-230	101.80		%	ThL			AlphaSpec	09ml0666lcs	lcs
SLD118377	09/16/09	09/17/09	09ML0666	HISS	0.10	L	DUP	TH-228	0.71	0.49	pCi/L	ThL	0.45		AlphaSpec	tw	water
SLD118377	09/16/09	09/17/09	09ML0666	HISS	0.10	L	REG	TH-228	0.31	0.32	pCi/L	ThL	0.42	U	AlphaSpec	tw	water
SLD118377	09/16/09	09/17/09	09ML0666	HISS	0.10	L	DUP	TH-230	0.67	0.46	pCi/L	ThL	0.20		AlphaSpec	tw	water
SLD118377	09/16/09	09/17/09	09ML0666	HISS	0.10	L	REG	TH-230	0.49	0.38	pCi/L	ThL	0.19		AlphaSpec	tw	water
SLD118377	09/16/09	09/17/09	09ML0666	HISS	0.10	L	DUP	TH-232	-0.04	0.07	pCi/L	ThL	0.45	U	AlphaSpec	tw	water
SLD118377	09/16/09	09/17/09	09ML0666	HISS	0.10	L	REG	TH-232	0.07	0.14	pCi/L	ThL	0.19	U	AlphaSpec	tw	water
SLD118377	09/16/09	09/16/09	09ML0666	HISS	1.00	L	REG	TSS	2.50		mg/L	TSS	0.76		Mettler XS204	tw	water
SLD118377	09/16/09	09/16/09	09ML0666	HISS	1.00	L	DUP	TSS	2.60		mg/L	TSS	0.76		Mettler XS204	tw	water

MSD 012104

Batch Number: BK-458
Sample ID: SLD118377
Area: City Property

Rad Analyte	Result (pCi/L)	Release to Sewers - SLDS or SLAPS		
		10CFR20, App B, Table 3	SOR Fraction (10CFR20)	MDOH / MSD Permit
Gross Alpha[1]	52.53	N/A	-	3000
Gross α Filtrate	53.62			
Gross α, solids from 1.0-μ filter	-1.09			
Gross Beta	13.73	N/A	-	N/A
Total Uranium	70.95	3000	0.02	3000
Ra-226	0.29	600	0.00	10
Th-228	0.31	2000	0.00	2000
Th-230	0.49	1000	0.00	1000
Th-232	0.07	300	0.00	N/A
Ra-228[2]	0.31	600	0.00	30
SOR TOTAL			**0.03**	
Non-Rad Analytes				
MSD TSS (mg/L)[3]	2.50	N/A	-	Surcharge applies to TSS over 300
pH (standard units)	7.73	-	-	5.5-11.5

Note: BK-458 was sampled for Full Chemistry and will be the second batch submitted to MSD for City Property. BK-457 was sampled for Full Chemistry and submitted to MSD for City Property.

[1]Gross alpha used only in the absence of isotopic data for radium and thorium
[2]Ra-228 and Th-228 assumed to be in equilibrium
[3]TSS initially compared to the monthly average. TSS for Coldwater Creek addressed by the NPDES.
N/A--Not applicable

PDC Laboratories, Inc.
3278 N. Highway 67 • Florissant, MO 63033
(314) 432-0550 • (800) 333-FAST (3278) • FAX (314) 432-4977

ACCREDITED IN ACCORDANCE WITH nelac

Laboratory Results

SHAW Environmental
110 James S. McDonnell Blvd.

Hazelwood, MO 63042-3102
Attn : Ms. Mindy Perret

Date Received : 09/16/09 12:43
Report Date : 09/22/09
Customer # : 276517
P.O. Number : 437982
Facility :

Sample No: **09098331-1** Collect Date **09/16/09 10:15**
Client ID : **SLD118377** Site : Locator : **SE09162009-02PDC**

Parameter	Qualifier	Result	Analysis Date	Analyst
SM (18) 5220D				
Chemical Oxygen Demand	<	5 mg/l	09/21/09 18:30	KE

ACCREDITATIONS

NELAC Accreditation for Wastewater, Hazardous and Solid Wastes Fields of Testing through IL EPA Lab No. 100253.

Certified by: Barbara G. Pandolfo
Barbara G. Pandolfo, Project Manager

This report shall not be reproduced, except in full, without the written approval of the laboratory.

recycled paper

PDC Laboratories Quality Control Summary Report

PROJECT: 09098331

WET CHEMISTRY ANALYSIS AND PREPARATION
QC CROSS REFERENCE REPORT

Lab ID	Client ID	Prep. Lot	Analysis Lot	Analysis Date	Analyst	Method	Sample Tag
09098331-1			WG196205	21-Sep-09 18:30	KE	SM (18) 5220D	

CONTINUING CALIBRATION VERIFICATION

Laboratory ID: WG196205-2 Analysis Lot: WG196205 Sample Tag:

Analyte	Units	Spiked	Measured	%Recovery	Limits	Analysis Date
Chemical Oxygen Demand	MG/L	100	100	101.6	95.1-104.9	21-Sep-09 16:30

CONTINUING CALIBRATION BLANK

Laboratory ID: WG196205-1 Analysis Lot: WG196205

Analyte	Units	Value	RDL	Analysis Date
Chemical Oxygen Demand	MG/L	5.0U	5.0	21-Sep-09 16:30

PDC Laboratories Quality Control Summary Report

PROJECT: 09098331

WET CHEMISTRY ANALYSIS AND PREPARATION

Chain of Custody Record

DO #: | PO #: | COC #: SE09162009-02PDC

SAMPLING EVENT NAME: | SAMPLE CATEGORY CODE: 2

Downtown Vicinity Properties/MSD Compliance/City Property/City Property

CONTRACTOR: Shaw Environmental, Inc.
PHONE NUMBER: (314)220-5373
CONTACT NAME: Mike Lyerla
DATA REVIEWER: Gwenan Skoba

LABORATORY: PDC Laboratories, Inc.
ADDRESS: 3278 N. Lindbergh
Florissant, MO 63042
REQUIRED TAT: 3 days

Requested Analyses

Page 1 of 1

# of containers this page: 1

Sample ID #		SDG #	Station	Date	Time	Depth/Flow/Vo	Matrix	COD							Comments
SLD118377	TW		City Property	9/16/2009	10:15	1 gal	Liquid	A							MSD, Batch 458

Special Instructions/ Comments: This water has already been filtered with a 1.0 micron filter.

☐ USACE ☐ SAIC
Witness:

Sample Category Codes (SCC)		Relinquished By:	Date:	Time:	Received By:	Date:	Time:
1. Verification	7. Breathing Zone	Michael C. Lyerla	9-16-09	1130	Heather Corbett	9/16/09	11:30
2. Characterization/ MSD	8. Perimeter						
3. Waste Characterization	9. Prefered Path Invest						
4. Confirmation Screening	10. Investigation						
5. Hot Zone	11. Inaccess. Soils Eval.						
6. PDI	12. Enfiro. Monitoring/ Permit Compliance						

MSD 012109

Steve Grace

From: Steve Grace
Sent: Wednesday, September 16, 2009 1:22 PM
To: 'Perret, Mindy'
Cc: Skoba, Gwenan
Subject: RE: City Property Batch 457

Hello Mindy,

Based on the laboratory analytical results provided, the first batch of wastewater from the new area on City Property site meets the applicable MSD permit requirements and is approved for discharge. As outlined in the previous approval letter and subsequent extensions, a maximum of 100,000 gallons of wastewater is allowed to be discharged in a 24-hour period. All other conditions of the previously mentioned approvals remain in effect.

Please contact me should you have any questions or require additional information.

Thank you,
Steve Grace

From: Perret, Mindy [mailto:mindy.perret@shawgrp.com]
Sent: Wednesday, September 16, 2009 7:53 AM
To: Steve Grace
Cc: Skoba, Gwenan
Subject: FW: City Property Batch 457

Hi Steve,
I will be out of the office for a few hours this morning. Can you please copy Gwenan.Skoba@shawgrp.com on the approval response?
Thank you,
Mindy Perret

From: Perret, Mindy
Sent: Tuesday, September 15, 2009 2:47 PM
To: 'sgrace@stlmsd.com'
Cc: 'RABIEH@stlmsd.com'; Skoba, Gwenan; 'Frerker, Ron MVS'
Subject: City Property Batch 457

Steve,
The results for City Property Batch 457 are attached for review. Batch 457 represents the first batch of water from City Property. The water will be discharged to MSD upon approval. Discharge will be limited to 100,000 gallons per day.

Thank you,
Mindy Perret
(314) 895-2113

****Internet Email Confidentiality Footer**** Privileged/Confidential Information may be contained in this message. If you are not the addressee indicated in this message (or responsible for delivery of the message to such person), you may not copy or deliver this message to anyone. In such case, you should destroy this message and notify the sender by reply email. Please advise immediately if you or your employer do not consent to Internet email for messages of this kind. Opinions, conclusions and other information in this message that do not relate to the official business of The Shaw Group Inc. or its subsidiaries shall be understood as neither given nor endorsed by it. _____ The Shaw Group Inc. http://www.shawgrp.com

Batch Number: BK-457
Sample ID: SLD118376
Area: City Property

Rad Analyte	Result (pCi/L)	Release to Sewers - SLDS or SLAPS		
		10CFR20, App B, Table 3	SOR Fraction (10CFR20)	MDOH / MSD Permit
Gross Alpha[1]	1.90	N/A	-	3000
Gross α Filtrate	0.54			
Gross α, solids from 1.0-μ filter	1.35			
Gross Beta	5.31	N/A	-	N/A
Total Uranium	0.07	3000	0.00	3000
Ra-226	0.22	600	0.00	10
Th-228	0.38	2000	0.00	2000
Th-230	0.54	1000	0.00	1000
Th-232	0.04	300	0.00	N/A
Ra-228[2]	0.38	600	0.00	30
SOR TOTAL			**0.00**	
Non-Rad Analytes				
MSD TSS (mg/L)[3]	1.60	N/A	-	Surcharge applies to TSS over 300
pH (standard units)	6.62	-	-	5.5-11.5

Note: BK-457 was sampled for Full Chemistry and will be the first batch submitted to MSD for City Property

[1]Gross alpha used only in the absence of isotopic data for radium and thorium

[2]Ra-228 and Th-228 assumed to be in equilibrium

[3]TSS initially compared to the monthly average. TSS for Coldwater Creek addressed by the NPDES.

N/A--Not applicable

Sample ID	Date Logged	Date Analyzed	Batch ID	Lab ID	Volume Analyzed	Volume Unit	Sample Type	Analyte	Result	Error	Units	Method	MDA	Qualifier	Instrument Type	Sample Description	Sample Matrix
SLD118376	09/03/09	09/03/09	09ML0624	HISS	0.10	L	DUP	GrossA	2.17	4.27	pCi/L	GAB	7.28	U	Tennelec	tw	water
SLD118376	09/03/09	09/03/09	09ML0624	HISS	0.10	L	REG	GrossA	1.90	4.24	pCi/L	GAB	7.28	U	Tennelec	tw	water
SLD118376	09/03/09	09/03/09	09ML0624	HISS	0.10	L	REG	GrossB	5.31	6.51	pCi/L	GAB	10.68	U	Tennelec	tw	water
SLD118376	09/03/09	09/03/09	09ML0624	HISS	0.10	L	DUP	GrossB	2.01	6.31	pCi/L	GAB	10.68	U	Tennelec	tw	water
SLD118376	09/02/09	09/02/09	09ML0624	HISS	1.00	mL	DUP	TotalU	0.08	0.00	pCi/L	KPA	1.10	U	KPA	tw	water
SLD118376	09/02/09	09/02/09	09ML0624	HISS	1.00	mL	REG	TotalU	0.07	0.00	pCi/L	KPA	1.10	U	KPA	tw	water
SLD118376	09/02/09	09/02/09	09ML0624	HISS	1.00		REG	pH	6.62		pH units	pH	0.10		Mettler SevenEa	tw	water
SLD118376	09/02/09	09/15/09	09ML0624	HISS	0.10	L	DUP	RA-226	0.39	0.38	pCi/L	RaL	0.48	U	AlphaSpec	tw	water
SLD118376	09/02/09	09/15/09	09ML0624	HISS	0.10	L	REG	RA-226	0.22	0.26	pCi/L	RaL	0.20		AlphaSpec	tw	water
SLD118376	09/02/09	09/11/09	09ML0624	HISS	0.10	L	REG	TH-228	0.38	0.35	pCi/L	ThL	0.21		AlphaSpec	tw	water
SLD118376	09/02/09	09/11/09	09ML0624	HISS	0.10	L	DUP	TH-228	0.15	0.29	pCi/L	ThL	0.57	U	AlphaSpec	tw	water
SLD118376	09/02/09	09/11/09	09ML0624	HISS	0.10	L	REG	TH-230	0.54	0.42	pCi/L	ThL	0.21		AlphaSpec	tw	water
SLD118376	09/02/09	09/11/09	09ML0624	HISS	0.10	L	DUP	TH-230	0.81	0.53	pCi/L	ThL	0.46		AlphaSpec	tw	water
SLD118376	09/02/09	09/11/09	09ML0624	HISS	0.10	L	REG	TH-232	0.04	0.17	pCi/L	ThL	0.46	U	AlphaSpec	tw	water
SLD118376	09/02/09	09/11/09	09ML0624	HISS	0.10	L	DUP	TH-232	0.04	0.17	pCi/L	ThL	0.46	U	AlphaSpec	tw	water
SLD118376	09/02/09	09/02/09	09ML0624	HISS	1.00	L	REG	TSS	1.60		mg/L	TSS	0.76		Mettler XS204	tw	water
SLD118376	09/02/09	09/02/09	09ML0624	HISS	1.00	L	DUP	TSS	1.60		mg/L	TSS	0.76		Mettler XS204	tw	water
SLD118376F	09/02/09	09/03/09	09ML0624	HISS	0.10	L	REG	GrossA	0.54	4.05	pCi/L	GAB	7.28	U	Tennelec	gab tss filtrate	water
SLD118376F	09/02/09	09/03/09	09ML0624	HISS	0.10	L	REG	GrossB	0.92	6.25	pCi/L	GAB	10.68	U	Tennelec	gab tss filtrate	water

PRELIMINARY DATA

Case Narrative
LOT NUMBER: **F9H200206**

This report contains the analytical results for the sample received under chain of custody by TestAmerica St. Louis on August 20, 2009. This sample is associated with your St. Louis FUSRAP project.

The analytical results included in this report meet all applicable quality control procedure requirements except as noted on the following page.

The test results in this report meet all NELAP requirements for parameters in which accreditations are held by TestAmerica St. Louis. Any exceptions to NELAP requirements are noted in the case narrative. **TestAmerica St. Louis' Florida certification number is E87689.** The case narrative is an integral part of this report.

This report shall not be reproduced, except in full, without the written approval of the laboratory.

All chemical analysis results are based upon sample as received, wet weight, unless noted otherwise. All radiochemistry results are based upon sample as dried and ground with the exception of tritium, unless requested wet weight by the client.

Observations/Nonconformances
Reference the chain of custody and condition upon receipt report for any variations on receipt conditions and temperature of samples on receipt.

Mercury

Batch 9237038:
The MS (MSD) recovery for mercury is outside the established QC limits. A matrix interference is physically evident in the sample. The sample is a water with soil in it. Method performance is demonstrated by acceptable LCS recovery.

PCBs by GC

To perform an MS/MSD on a sample for organic extractables, the laboratory requires 3 liters of sample. Due to receiving less than the required three liters, the laboratory performed the MS/MSD extraction using half volume.
Affected Samples:
F9H200206 (1): SLD118375

Semivolatile by GC/MS

Batch 9233207:
To perform an MS/MSD on a sample for organic extractables, the laboratory requires 3 liters of sample. Due to receiving less than the required three liters, the laboratory performed the MS/MSD extraction using half volume.
The MS/MSD RPD for one compound is not within method acceptance criteria. MS/MSD recoveries are within QC limits demonstrating good extraction performance in the sample matrix.
Affected Samples:
F9H200206 (1): SLD118375

PRELIMINARY DATA

Trace ICP Metals

Batch 9233244:
The sample was analyzed at a dilution due to high concentrations of target and interfering analytes. The reporting limit has been adjusted only for those targets reported from the dilution run.
The serial dilution for boron and zinc is outside of the established QC limits indicating a possible matrix interference.
The MS (MSD) recovery for aluminum is outside the established QC limits. The RPD is within method acceptance criteria indicating a possible matrix interference. Method performance is demonstrated by acceptable LCS recovery.
Affected Samples:
F9H200206 (1): SLD118375

There were no nonconformances or observations noted with any other analysis on this lot.

PRELIMINARY DATA

TESTAMERICA-ST. LOUIS

Metals Data Reporting Form

Sample Results

Lab Sample ID: LJGTA **Client ID:** SLD118375

Matrix: Water **Units:** ug/L **Prep Date:** 8/21/2009 **Prep Batch:** 9233244

Weight: 50 **Volume:** 50 **Percent Moisture:** NA

Element	WL/ Mass	MDL	Report Limit	Conc	Q	DF	Instr	Anal Date	Anal Time
Aluminum	308.22	79.9	200	7330	N	1	ICPST	8/26/2009	1:07
Antimony	206.84	4.0	60.0	7.3	B	1	ICPST	8/26/2009	1:07
Arsenic	189.04	2.0	200	6.9	B	1	ICPST	8/26/2009	1:07
Barium	493.41	4.0	50.0	198		1	ICPST	8/26/2009	1:07
Beryllium	313.04	0.61	5.0	0.61	U	1	ICPST	8/26/2009	1:07
Boron	249.68	10.8	100	196	E	1	ICP	8/26/2009	11:09
Cadmium	226.50	0.91	5.0	0.91	U	1	ICPST	8/26/2009	1:07
Calcium	317.93	212	2000	56200		2	ICPST	8/26/2009	9:27
Chromium	267.76	3.1	10.0	11.4		1	ICPST	8/26/2009	1:07
Cobalt	228.62	4.0	50.0	4.0	U	1	ICPST	8/26/2009	1:07
Copper	324.75	4.6	25.0	39.4		1	ICPST	8/26/2009	1:07
Iron	217.44	28.2	100	9600		1	ICPST	8/26/2009	1:07
Lead	220.35	1.3	100	143		1	ICPST	8/26/2009	1:07
Lithium	670.79	9.6	50.0	9.6	U	1	ICP	8/26/2009	11:09
Magnesium	279.08	132	1000	6440		1	ICPST	8/26/2009	1:07
Manganese	257.61	3.3	15.0	220		1	ICPST	8/26/2009	1:07
Molybdenum	202.03	5.0	40.0	11.4	B	1	ICPST	8/26/2009	1:07
Nickel	231.60	13.3	40.0	14.2	B	1	ICPST	8/26/2009	1:07
Potassium	766.49	1650	5000	7870		1	ICP	8/26/2009	11:09
Selenium	196.03	2.7	200	2.7	U	1	ICPST	8/26/2009	1:07
Silver	328.07	6.0	20.0	6.0	U	1	ICPST	8/26/2009	1:07
Sodium	589	324	1000	9320		1	ICP	8/26/2009	11:09
Strontium	421.55	1.1	10.0	1030		2	ICPST	8/26/2009	9:27
Thallium	190.86	4.0	200	4.0	U	1	ICPST	8/26/2009	1:07
Uranium	385.96	23.5	500	81.2	B	1	ICPST	8/26/2009	1:07
Vanadium	292.40	4.1	50.0	20.9	B	1	ICPST	8/26/2009	1:07
Zinc	213.86	5.2	20.0	348	E	1	ICPST	8/26/2009	1:07

Comments: Lot #: F9H200206 Sample #: 1

Version 4.75.1

U Result is less than the IDL
B Result is between MDL and RL

Form 1 Equivalent

PRELIMINARY DATA

TESTAMERICA-ST. LOUIS

Metals Data Reporting Form

Sample Results

Lab Sample ID: LJGTA **Client ID:** SLD118375

Matrix: Water **Units:** ug/L **Prep Date:** 8/26/2009 **Prep Batch:** 9238051

Weight: 30 **Volume:** 30 **Percent Moisture:** NA

Element	WL/ Mass	MDL	Report Limit	Conc	Q	DF	Instr	Anal Date	Anal Time
Mercury	253.7	0.044	0.20	0.67	E	1	CVAA	8/26/2009	12:00

Comments: Lot #: F9H200206 Sample #: 1

Version 4.75.1

U Result is less than the IDL
B Result is between MDL and RL

Form 1 Equivalent

Ldt# F9H200206

Chain of Custody Record

DO #: PO #: COC #: SE08202009-02TA

SAMPLING EVENT NAME: SAMPLE CATEGORY CODE: 2

Downtown Vicinity Properties/MSD Compliance/City Property/City Property

CONTRACTOR: Shaw Environmental, Inc.
PHONE NUMBER: (314)220-5373
CONTACT NAME: Mike Lyerla
DATA REVIEWER: Gwenan Skoba

LABORATORY: TestAmerica
ADDRESS: 13715 Rider Trail North
Earth City, MO 63045

REQUIRED TAT: 5 days

Page 1 of 1

# of containers this page: 7

Sample ID #		SDG #	Station	Date	Time	Depth/Flow/Vol	Matrix	PCBs	Semi-VOAs	VOAs	TAL Metals				Comments
SLD118375	TW		City Property	8/20/2009	9:45	1 gal	Liquid	A,B	C,D	E,F	G				MSD, Batch 457, tank 2
															4VLG, LP, 2x40

Special Instructions/ Comments: This water has already been filtered with a 1.0 micron filter.

☐ USACE ☐ SAIC
Witness:

Sample Category Codes (SCC)	
1. Verification	7. Breathing Zone
2. Characterization/ MSD	8. Perimeter
3. Waste Characterization	9. Prefered Path Invest
4. Confirmation Screening	10. Investigation
5. Hot Zone	11. Inaccess. Soils Eval.
6. PDI	12. Enviro. Monitoring/ Permit Compliance

Relinquished By:	Date:	Time:	Received By:	Date:	Time:
[signature]	8/20/09	11:00	[signature]	8/20/09	11:00

PRELIMINARY DATA

TestAmerica St. Louis

PRELIMINARY DATA

Case Narrative
LOT NUMBER: **F9I020234**

This report contains the analytical results for the sample received under chain of custody by TestAmerica St. Louis on September 2, 2009. This sample is associated with your St. Louis FUSRAP project.

The analytical results included in this report meet all applicable quality control procedure requirements except as noted on the following page.

The test results in this report meet all NELAP requirements for parameters in which accreditations are held by TestAmerica St. Louis. Any exceptions to NELAP requirements are noted in the case narrative. **TestAmerica St. Louis' Florida certification number is E87689.** The case narrative is an integral part of this report.

This report shall not be reproduced, except in full, without the written approval of the laboratory.

All chemical analysis results are based upon sample as received, wet weight, unless noted otherwise. All radiochemistry results are based upon sample as dried and ground with the exception of tritium, unless requested wet weight by the client.

Observations/Nonconformances
Reference the chain of custody and condition upon receipt report for any variations on receipt conditions and temperature of samples on receipt.

PCBs by GC

- CCVs PCAL018 and PCAL029 recovered low for surrogate DCB. Samples associated with these CCVs either recovered DCB within method acceptance criteria, or will not be reported from this analysis.
- To perform an MS/MSD on a sample for organic extractables, the laboratory requires 3 liters of sample. Due to receiving less than the required three liters, the laboratory performed the MS/MSD extraction using half volume.

Affected Samples:
F9I020234 (1): SLD118376

Semivolatile Organics by GC/MS

Batch 9246183:

- The method blank exhibited concentrations above the reporting limit, indicating a potential positive bias for the analyte. There was insufficient sample for re-preparation/re-analysis.
- The LCS recovery for N-Nitrosodiphenylamine is outside the upper QC limit, indicating a potential positive bias for this analyte. This analyte was not observed above the reporting limit in the associated samples; therefore the sample data was not adversely affected by this excursion.
- To perform an MS/MSD on a sample for organic extractables, the laboratory requires 3 liters of sample. Due to receiving less than the required three liters, the laboratory performed the MS/MSD extraction using half volume.

Affected Samples:
F9I020234 (1): SLD118376

PRELIMINARY DATA

Volatile Organics by GC/MS

Batch 9250075:

- The CCV recoveries were outside the upper QC limit (greater than 20% D) for Bromomethane, Allyl chloride, Vinyl acetate and Pentachloroethane indicating a potential high bias for those analytes in the samples associated with this CCV. These analytes were not detected above the reporting limit or were not target analytes in the associated samples.
- The LCS recovery for Bromomethane, trans-1,2-Dichloroethene and Vinyl acetate are outside the upper QC limit, indicating a potential positive bias for these analytes. These analytes were not observed above the reporting limit in the associated samples; therefore the sample data was not adversely affected by this excursion.
- The MS recovery for Methylene chloride was outside the upper QC limit, indicating a potential positive bias for this analyte. This analyte was not observed above the reporting limit in the associated samples; therefore the sample data was not adversely affected by this excursion.

Affected Samples:

F9I020234 (1): SLD118376

PRELIMINARY DATA

Science Applications International Corp

Client Sample ID: SLD118376

GC/MS Volatiles

Lot-Sample #...: F9I020234-001 **Work Order #...:** LJ7VN1AA **Matrix.....:** WATER
Date Sampled...: 09/01/09 13:15 **Date Received..:** 09/02/09
Prep Date.....: 09/07/09 **Analysis Date..:** 09/07/09
Prep Batch #...: 9250075 **Analysis Time..:** 17:23
Dilution Factor: 1

Method.....: SW846 8260B

PARAMETER	RESULT	REPORTING LIMIT	UNITS
Acetone	ND	20	ug/L
Benzene	ND	5.0	ug/L
Bromodichloromethane	ND	5.0	ug/L
Bromoform	ND	5.0	ug/L
Bromomethane	ND	10	ug/L
2-Butanone	ND	20	ug/L
Carbon disulfide	ND	5.0	ug/L
Carbon tetrachloride	ND	5.0	ug/L
Chlorobenzene	ND	5.0	ug/L
Dibromochloromethane	ND	5.0	ug/L
Chloroethane	ND	10	ug/L
Chloroform	ND	5.0	ug/L
Chloromethane	**0.65 J**	**10**	**ug/L**
1,1-Dichloroethane	ND	5.0	ug/L
1,2-Dichloroethane	ND	5.0	ug/L
1,1-Dichloroethene	ND	5.0	ug/L
1,2-Dichloroethene (total)	ND	5.0	ug/L
1,2-Dichloropropane	ND	5.0	ug/L
cis-1,3-Dichloropropene	ND	5.0	ug/L
trans-1,3-Dichloropropene	ND	5.0	ug/L
Ethylbenzene	ND	5.0	ug/L
2-Hexanone	ND	20	ug/L
Methylene chloride	ND	5.0	ug/L
4-Methyl-2-pentanone	ND	20	ug/L
Styrene	ND	5.0	ug/L
1,1,2,2-Tetrachloroethane	ND	5.0	ug/L
Tetrachloroethene	ND	5.0	ug/L
Toluene	ND	5.0	ug/L
1,1,1-Trichloroethane	ND	5.0	ug/L
1,1,2-Trichloroethane	ND	5.0	ug/L
Trichloroethene	ND	5.0	ug/L
1,1,2-Trichloro-1,2,2-trifluoroethane	ND	5.0	ug/L
Vinyl chloride	ND	10	ug/L
Xylenes (total)	ND	5.0	ug/L

(Continued on next page)

PRELIMINARY DATA

Science Applications International Corp

Client Sample ID: SLD118376

GC/MS Volatiles

Lot-Sample #...: F9I020234-001 **Work Order #...:** LJ7VN1AA **Matrix.....:** WATER

SURROGATE	PERCENT RECOVERY	RECOVERY LIMITS
Toluene-d8	104	(79 - 126)
Dibromofluoromethane	101	(85 - 117)
1,2-Dichloroethane-d4	99	(84 - 127)
4-Bromofluorobenzene	104	(82 - 117)

NOTE(S):

J Estimated result. Result is less than RL.

PRELIMINARY DATA

Science Applications International Corp

Client Sample ID: SLD118376

GC/MS Semivolatiles

Lot-Sample #...: F9I020234-001 **Work Order #...:** LJ7VN1AC **Matrix.....:** WATER
Date Sampled...: 09/01/09 13:15 **Date Received..:** 09/02/09
Prep Date.....: 09/03/09 **Analysis Date..:** 09/05/09
Prep Batch #...: 9246183 **Analysis Time..:** 04:14
Dilution Factor: 1
Method.....: SW846 8270C

PARAMETER	RESULT	REPORTING LIMIT	UNITS
3-Methylphenol & 4-Methylphenol	ND	20	ug/L
Phenol	ND	10	ug/L
bis(2-Chloroethyl)-ether	ND	10	ug/L
2-Chlorophenol	ND	10	ug/L
1,3-Dichlorobenzene	ND	10	ug/L
1,4-Dichlorobenzene	ND	10	ug/L
1,2-Dichlorobenzene	ND	10	ug/L
2-Methylphenol	ND	10	ug/L
2,2'-oxybis (1-Chloropropane)	ND	10	ug/L
N-Nitrosodi-n-propyl-amine	ND	10	ug/L
Hexachloroethane	ND	10	ug/L
2-Methylnaphthalene	ND	10	ug/L
Nitrobenzene	ND	10	ug/L
Isophorone	ND	10	ug/L
2-Nitrophenol	ND	10	ug/L
2,4-Dimethylphenol	ND	10	ug/L
bis(2-Chloroethoxy) methane	ND	10	ug/L
2,4-Dichlorophenol	ND	10	ug/L
1,2,4-Trichloro-benzene	ND	10	ug/L
Naphthalene	ND	10	ug/L
4-Chloroaniline	ND	10	ug/L
Hexachlorobutadiene	ND	10	ug/L
4-Chloro-3-methylphenol	ND	10	ug/L
Hexachlorocyclopenta-diene	ND	10	ug/L
2,4,6-Trichloro-phenol	ND	10	ug/L
2,4,5-Trichloro-phenol	ND	10	ug/L
2-Chloronaphthalene	ND	10	ug/L
2-Nitroaniline	ND	10	ug/L
Dimethyl phthalate	ND	10	ug/L

(Continued on next page)

PRELIMINARY DATA

Science Applications International Corp

Client Sample ID: SLD118376

GC/MS Semivolatiles

Lot-Sample #...: F9I020234-001 **Work Order #...:** LJ7VN1AC **Matrix.....:** WATER

PARAMETER	RESULT	REPORTING LIMIT	UNITS
Acenaphthylene	ND	10	ug/L
2,6-Dinitrotoluene	ND	10	ug/L
3-Nitroaniline	ND	10	ug/L
Acenaphthene	ND	10	ug/L
2,4-Dinitrophenol	ND	50	ug/L
4-Nitrophenol	ND	25	ug/L
Dibenzofuran	ND	10	ug/L
2,4-Dinitrotoluene	ND	10	ug/L
Diethyl phthalate	**1.9 J,B**	**10**	**ug/L**
Fluorene	ND	10	ug/L
4-Chlorophenyl phenyl ether	ND	10	ug/L
4-Nitroaniline	ND	10	ug/L
4,6-Dinitro-2-methylphenol	ND	50	ug/L
N-Nitrosodiphenylamine	ND	10	ug/L
4-Bromophenyl phenyl ether	ND	10	ug/L
Hexachlorobenzene	ND	10	ug/L
Pentachlorophenol	ND	50	ug/L
Phenanthrene	ND	10	ug/L
Anthracene	ND	10	ug/L
Carbazole	ND	10	ug/L
Fluoranthene	ND	10	ug/L
Pyrene	ND	10	ug/L
Butyl benzyl phthalate	**1.6 J**	**10**	**ug/L**
Benzo(a)anthracene	ND	10	ug/L
3,3'-Dichlorobenzidine	ND	50	ug/L
Chrysene	ND	10	ug/L
bis(2-Ethylhexyl) phthalate	ND	10	ug/L
Di-n-butyl phthalate	**11 B**	**10**	**ug/L**
Di-n-octyl phthalate	ND	10	ug/L
Benzo(b)fluoranthene	ND	10	ug/L
Benzo(k)fluoranthene	ND	10	ug/L
Benzo(a)pyrene	ND	10	ug/L
Indeno(1,2,3-cd)pyrene	ND	10	ug/L
Benzo(ghi)perylene	ND	10	ug/L
Dibenz(a,h)anthracene	ND	10	ug/L

(Continued on next page)

PRELIMINARY DATA

Science Applications International Corp

Client Sample ID: SLD118376

GC/MS Semivolatiles

Lot-Sample #...: F9I020234-001 **Work Order #...:** LJ7VN1AC **Matrix.....:** WATER

SURROGATE	PERCENT RECOVERY	RECOVERY LIMITS
2-Fluorophenol	34	(20 - 73)
Phenol-d5	24	(10 - 59)
Nitrobenzene-d5	55	(42 - 94)
2-Fluorobiphenyl	42	(33 - 101)
2,4,6-Tribromophenol	73	(42 - 109)
Terphenyl-d14	73	(40 - 113)

NOTE(S):

J Estimated result. Result is less than RL.

B Method blank contamination. The associated method blank contains the target analyte at a reportable level.

PRELIMINARY DATA

Science Applications International Corp

Client Sample ID: SLD118376

GC Semivolatiles

Lot-Sample #...: F9I020234-001 **Work Order #...:** LJ7VN1AD **Matrix.....:** WATER
Date Sampled...: 09/01/09 13:15 **Date Received..:** 09/02/09
Prep Date.....: 09/03/09 **Analysis Date..:** 09/04/09
Prep Batch #...: 9246186 **Analysis Time..:** 07:59
Dilution Factor: 1
Method.....: SW846 8082

PARAMETER	RESULT	REPORTING LIMIT	UNITS
Aroclor 1016	ND	1.0	ug/L
Aroclor 1221	ND	1.0	ug/L
Aroclor 1232	ND	1.0	ug/L
Aroclor 1242	ND	1.0	ug/L
Aroclor 1248	ND	1.0	ug/L
Aroclor 1254	ND	1.0	ug/L
Aroclor 1260	ND	1.0	ug/L
Aroclor 1262	ND	1.0	ug/L
Aroclor 1268	ND	1.0	ug/L

SURROGATE	PERCENT RECOVERY	RECOVERY LIMITS
Decachlorobiphenyl	72	(45 - 150)

Ldt# F9I020234

cwl 73

Chain of Custody Record

DO #: 18 PO #: COC #: SE09012009-03TA

SAMPLE CATEGORY CODE: 2

SAMPLING EVENT NAME: Downtown Vicinity Properties/MSD Compliance/City Property

CONTRACTOR: Shaw Environmental, Inc.
PHONE NUMBER: (314)220-5373
CONTACT NAME: Mike Lyerla
DATA REVIEWER: Gwenan Skoba

LABORATORY: TestAmerica
ADDRESS: 13715 Rider Trail North
Earth City, MO 63045

REQUIRED TAT: 5 days

Requested Analyses

Page 1 of 1

# of containers this page: 6

Sample ID #		SDG #	Station	Date	Time	Depth/Flow/Ve	Matrix	VOAs	PCBs	Semi-VOAs					Comments
SLD118376	TW		City Property	9/1/2009	13:15	1 gal	Liquid	A,B	C,D	E,F					MSD, Resample of Batch 457, tank 2

Special Instructions/ Comments: This water has already been filtered with a 1.0 micron filter.

☐ USACE ☐ SAIC
Witness:

Sample Category Codes (SCC)		Relinquished By:	Date:	Time:	Received By:	Date:	Time:
1. Verification	7. Breathing Zone	[illegible]	9/2/09	1000	[illegible]	9/2/09	1000
2. Characterization/ MSD	8. Perimeter						
3. Waste Characterization	9. Prefered Path Invest						
4. Confirmation Screening	10. Investigation						
5. Hot Zone	11. Inaccess. Soils Eval.						
6. PDI	12. Enviro. Monitoring/ Permit Compliance						

PRELIMINARY DATA

TestAmerica St. Louis

PDC Laboratories, Inc.
3278 N. Highway 67 • Florissant, MO 63033
(314) 432-0550 • (800) 333-FAST (3278) • FAX (314) 432-4977

ACCREDITED IN ACCORDANCE WITH

Laboratory Results

SHAW Environmental
110 James S. McDonnell Blvd.

Hazelwood, MO 63042-3102
Attn : Ms. Mindy Perret

Date Received : 08/20/09 13:10
Report Date : 08/26/09
Customer # : 276517
P.O. Number : 437982
Facility :

Sample No: **09088394-1** Collect Date **08/20/09 09:45**
Client ID : **SLD118375** Site : Locator : **SE08202009-01PDC**

Parameter	Qualifier	Result	Analysis Date	Analyst
SM (18) 5220D				
Chemical Oxygen Demand		44 mg/l	08/20/09 11:00	KE

ACCREDITATIONS

NELAC Accreditation for Wastewater, Hazardous and Solid Wastes Fields of Testing through IL EPA Lab No. 100253.

Certified by: Barbara G. Pandolfo
Barbara G. Pandolfo, Project Manager

This report shall not be reproduced, except in full, without the written approval of the laboratory.

recycled paper

MSD 012128

Chain of Custody Record

DO #: PO #: COC #: **SE08202009-01PDC**

SAMPLING EVENT NAME: SAMPLE CATEGORY CODE: 2

Downtown Vicinity Properties/MSD Compliance/City Property/City Property

CONTRACTOR: Shaw Environmental, Inc.
PHONE NUMBER: (314)220-5373
CONTACT NAME: Mike Lyerla
DATA REVIEWER: Dave Cowell

LABORATORY: PDC Laboratories, Inc.
ADDRESS: 3278 N. Lindbergh
Florissant, MO 63042

EQUIRED TAT: 3 days

Requested Analyses

Page 1 of 1

# of containers this page: 1

Sample ID #		SDG #	Station	Date	Time	Depth/Flow/Vo	Matrix	COD							Comments
SLD118375	TW		City Property	8/20/2009	9:45	250 ml	Liquid	A							MSD, Batch 457, tank 2

Special Instructions/ Comments: This water has already been filtered with a 1.0 micron filter.

☐ USACE ☐ SAIC
Witness:

Sample Category Codes (SCC)	
1. Verification	7. Breathing Zone
2. Characterization/ MSD	8. Perimeter
3. Waste Characterization	9. Prefered Path Invest
4. Confirmation Screening	10. Investigation
5. Hot Zone	11. Inaccess. Soils Eval.
6. PD₁	12. Enfiro. Monitoring/ Permit Compliance

Relinquished By:	Date:	Time:	Received By:	Date:	Time:
[signature]	8/20/09	1158	Heather Gaulart	8/20/09	11:58

Sow
SR

COVIDIEN

SEPTEMBER 11, 2009

Mr. Doug Mendoza
Metropolitan St. Louis Sewer District
Department of Environmental Compliance
10 East Grand Avenue
St. Louis, MO 63147-2913

RE: Retraction to a Report of a pH Excursion at the St. Louis Plant Main Outfall Sample Point 010
PERMIT NO. 2112059600-2.1

Dear Mr. Mendoza:

This letter is a retraction to a report of a pH excursion greater than 60 minutes at the Mallinckrodt St. Louis Plant's main outfall Sample Point SP010 as reported to you via voice mail on the evening of September 3, 2009 from Mr. Ken Coffey, Health, Safety and Environmental On-Call.

On September 3, 2009, from 1815 to 1900 (45 minutes) the pH was below the permit limit of 5.5. Initially, the verbal report indicated the out of range time was 70 minutes, but the plant control system shows the outfall was diverted into the reserve spill tanks at 45 minutes. (The pH probe continued to record, but the flow had been diverted.)

If you have any questions or need additional information, please call me at 314.654.3374.

Sincerely,

Lisa Meyer

Lisa Meyer
Senior HSE Engineer

RECEIVED
SEP 14 2009
DIVISION OF
ENVIRONMENTAL COMPLIANCE

COVIDIEN/MALLINCKRODT
3600 NORTH SECOND STREET
ST. LOUIS, MO 63147

TELEPHONE: 314-654-2000
FAX: 314-654-1251

Metropolitan St. Louis Sewer District

Division of Environmental Compliance
10 East Grand Avenue
St. Louis, MO 63147-2913
Phone: 314.768.6200 www.stlmsd.com

September 9, 2009

Lisa Meyer
MALLINCKRODT
3600 North Second St.
St. Louis, MO 63147

Dear Ms. Meyer:

We have reviewed your application dated September 8, 2009 requesting approval to discharge 370 gallons of wastewater to the Metropolitan St. Louis Sewer District for treatment. This wastewater is a batch of reduced Diamide solution from Building 507 of the Mallinckrodt facility located at 3600 North Second Street, St. Louis, Missouri. Information provided in the application indicates the wastewater is to be discharged in conjunction with tank maintenance. In a previous telephone conversation on January 8, 2009, you stated that the reduced Diamide solution is a precursor to the production of imaging product MP104, and that this wastewater will be discharged through sampling point 010.

Based on the information you provided, this wastewater meets MSD Ordinance 12559 standards and is approved for discharge into a sanitary sewer on site. This approval is valid for 30 days from the date of this letter.

You must be certain the waste is discharged into a sanitary or combined sewer inlet only. This letter does not authorize any discharge to a separate storm sewer, or to any watercourse, as any such discharge would be in violation of state and federal laws. **Please notify me at the number below when the discharge is to commence.**

This discharge has been approved based upon the information and sample analysis you provided, and is subject to the conditions stated above. This approval may be revoked by the District at any time if any of the information is found to be incorrect, or if the conditions of this approval are violated. Also, if the discharge causes any operational or maintenance problem within the District's collection or treatment system, or results in violations of any conditions of the District's NPDES permit, Mallinckrodt will be considered responsible for damages.

If you have any questions, please call me at (314) 436-8755.

Sincerely,
METROPOLITAN ST. LOUIS SEWER DISTRICT

Steven M. Grace

Steve Grace
Environmental Assistant Engineer

bv

pc: Nora Estopare

File: IU, MALLINCKRODT INC [2112059600], 3600 N. 2nd St., St. Louis, Missouri

C1A

SD EVALUATION CHECKLIST - ON SITE

APPLICATION INFORMATION

Source Name: Mallinckrodt Inc. Evaluated by: SMG

Premise Address: 3600 N. 2nd St. Date: 9/9/09

Send approval letter to applicant

Application Dated: 9/8/09 Received: 9/8/09 All Requested Info. Received: 9/9/09

SOURCE FILING/DESCRIPTION

1 - Source in PIMS? (Y) / N
2 - If No, on IU Cross-Ref list? * Y / N
3 - If No, MSD Account # from E-CIS? Y / N
4 - If none, on "Source" list (pre-IMS)? ** Y / N
5 - If No, assigned SOUR# from PIMS.

* o:\costrecovery\cross reference xls file
** o:\costrecovery\sourlist xls file

SOURCE TYPE (circle): (IU) / Dead IU / SD

INDUSTRY ID: 21120596-00

Sample Point: No. Assigned: 843 Description: Reduced Diamide solution from Bldg. 507

Normal WW flow from premise? N/A _____ ccf/month, 2,992,101 GPD, _____ GPH. from SP010

REGULATORY STATUS

Is waste a Hazardous Waste? (N) / Y
Categorical standards apply? (N) / Y
Contain PCB/ asbestos/ radioactive/ dioxin/ used oil? (N) / Y
Regulatory Agency Oversight? (N) / Y

DISCHARGE CONSIDERATIONS At MSD's connection:

Ordinance Limits (12559, p32) exceeded? (N) / Y
Ordinance other limits exceeded (dye, flash pt <140F, temp >140F, obstruction, nuisance foaming/odor, corrosion causing): (N) / Y
Water Quality Standard exceeded? (N) / Y
Fumes in sewer exceed PEL/TLV limits? (N) / Y
Vapors in sewer exceed 10% of LEL? (N) / Y

RECOMMENDATION: (APPROVE) / DENY (cc WWTP Mgr for timed discharge)

APPROVAL CONDITIONS:

Timed Discharge (COD/BOD/WQ/foam): (N) / Y Limit = _____ gal/hour
Require Treatment before Discharge? (N) / Y
Laboratory analysis fee due? (N) / Y $_____
SMR required? (N) / Y Frequency/analysis: _____
SMR log: (N/A) / Remediation.xls / Nonremediation.xls
Volume Billing applies (water unmetered or credited)? (N) / Y
Bill High Strength? (N) / Y Yes, If use >60,000 gal/month water ___and, > norm WW strgth
Surcharge calculation attached: (N/A) / N / Y
Expiration log updated: (N/A) / N / Y

O:\CostRecovery Special Discharge\C1a Checklist doc

COVIDIEN

Facsimile Communication

To: Mr. Steve Grace
Company: MSD Environmental Compliance
Fax Number: 314.436.8766
Date: September 8, 2009

Number of Pages *(including cover sheet)*: 10

Health, Safety, Environmental

Lisa Meyer
Senior HSE Engineer

Covidien/Mallinckrodt
3600 N. Second St.
St. Louis, Missouri 63147

Telephone 314-654-3374
Facsimile 314-654-1251

- ☐ For your information
- X Please respond
- X Urgent
- ☐ Confidential

Comments:

Dear Mr. Grace,

Attached please find an application for Special Discharge for approximately 370 gallons of a Reduced Diamide solution from Building 507. If you have any questions or need additional information, please contact me.

Thank you,

Lisa Meyer

Metropolitan St. Louis Sewer District

Division of Environmental Compliance. 10 East Grand Avenue, St. Louis, Missouri 63147
Phone No. (314) 436-8710
Fax No. (314) 436-8766

APPLICATION FOR SPECIAL DISCHARGE APPROVAL

I. WASTEWATER SOURCE IDENTIFICATION:

Site Name: Mallinckrodt
Premise Address: 3600 North 2nd St.
City: St. Louis State: MO Zip: 63147
Owner: Mallinckrodt
Contact Person: Lisa Meyer
Title: Senior HSE Engineer
Phone: 314.654.3374 Fax: 314.654.1251

II. APPLICANT (mailing information):

Applicant Name: Lisa Meyer
Title: Senior HSE Engineer
Company Name: Mallinckrodt
Mailing Address: 3600 North 2nd St.
City: St. Louis State: MO Zip: 63147
Phone: 314.654.3374 Fax: 314.654.1251

III. A. MATERIAL TO BE DISCHARGED (check all applicable boxes):

1. Wastewater description/location: Reduced Diamide Solution from Building 507
2. Process/activity generating wastewater: 370 gallons of reduced diamide solution request for discharge to perform tank maintenance. pH of solution is 6.5.
3. Physical and chemical composition: List all constituents, and known or potentially present regulated contaminants below.
   ☐ See separate listing enclosed, and/or ☐ See analytical results enclosed, and/or ☑ Material Safety Data Sheet enclosed.

DESCRIPTION	RANGE	UNIT
Water	62	%
Reduced Diamide	33	%
50% Sodium Hydroxide	4	%
Methanol	<1	%

DESCRIPTION (continued)	RANGE	UNIT

4. Is this wastewater from a process subject to EPA's categorical standards in 40 CFR Subchapter N? ☐ Yes ☑ No
   a. If yes, the applicable standards are in: 40 CFR Part _____, Subpart _____ ☐ Existing source ☐ New source
5. Does this wastewater contain polychlorinated biphenyls, asbestos or radioactive material? ☐ Yes ☑ No
   a. If yes, describe: _____
6. Representative sample: ☐ Laboratory results attached, and/or ☐ Sample provided (1/2 gallon minimum, clear container)
   a. Sample collection point/location: _____ Collection method: _____
   b. Sampler's name/Co.: _____ Sample date/time: _____
   c. Attach chain of custody as available
7. Discharge will occur over the following time period: ☐ < 30 days ☐ ≥ Two years ☑ Other: 9/10/09
   a. Expected total volume of wastewater to be discharged over the time period above: 370 Gallons
   b. Proposed discharge volume: 370 Gallons, at a frequency of: ☑ One time ☐ Daily ☐ Weekly ☐ Monthly ☐ Once/three months ☐ Once/six months ☐ Other: _____
8. Pretreatment of wastewater prior to discharge: ☐ None ☑ Yes, describe: pH neutralization system at main outfall.
   a. If yes, attach site plan, pretreatment system schematic, and design specifications.
9. Wastewater from a remediation project under: ☐ Superfund/CERCLA ☐ RCRA ☐ Voluntary program ☐ UST ☑ Not applicable
   a. If from a remediation project, briefly describe the past and present utilization of the property: _____

III.B. MATERIAL FROM UNDERGROUND STORAGE TANK SOURCE

☑ **Not applicable (go to Section IV)**

Please answer the following questions if you are requesting to discharge wastewater associated with an underground storage tank system.

1. a. Wastewater from: ☐ Inside UST(s) ☐ UST system pit ☐ Excavation outside UST system pit ☐ Monitoring well ☐ Groundwater remediation system

   b. UST project involves wastewater from: ☐ UST(s) closed in place ☐ UST(s) removed ☐ Remediation ☐ Upgrade ☐ Maintenance activities ☐ Well monitoring ☐ Other, explain: _____

   c. If wastewater is from a closure project, how long has UST(s) been out of service: _____ years

2. a. State assigned UST site identification number: _____ ☐ Not applicable

   b. Number of USTs affected: _____ ☐ Unknown

   c. For the UST(s) involved, their state identification number(s): _____ ☐ Not applicable

   d. Service Station Identification Number, as applicable: _____

3. Tank contents/former contents: ☐ Gasoline ☐ #2 diesel ☐ Used oil ☐ Unknown ☐ Other: _____

IV. DISCHARGE LOCATION

1. ☑ On-site. Describe proposed point of entry to sewer and the discharge rate (must be a sanitary or combined sewer): _____
   Plant sewer to main outfall SP010 _____ Note: Range of discharge must not surcharge sewer line.

2. ☐ Haul to MSD Bissell Point Hauled Waste Receiving Station at 10 E. Grand, St. Louis, MO.

   a. Transporters Name: _____ and MSD Hauler ID Number: _____

   b. Hazardous Waste Certification:

   For wastewater which is hauled to MSD's Bissell Point Hauled Waste Receiving Station, I hereby certify that to the best of my knowledge and belief, the above hauled waste is not classified as a RCRA "hazardous waste" as defined by the MDNR in 10 CSR 25 or USEPA in 40 CFR Part 261.

   Applicant Name (print): _____

   Signature: _____ **Date:** _____

ADDITIONAL INFORMATION:

_____

V. APPLICANT SIGNATURE AND CERTIFICATION

This application must be signed by the applicant: either the source contact, or a contractor or agent directly responsible for site activities.

I hereby certify that I am directly responsible for activities at the site regarding the wastewater to be discharged, and to the best of my knowledge and belief, based on appropriate inquiry, the information in this application is true, complete, and accurate. The samples or analyses submitted are representative of the materials to be discharged. If granted approval to discharge, I agree to abide by the MSD Ordinances, and all applicable federal, state and local regulations. I agree to pay the costs of any pre-approval analyses performed by MSD and to pay any applicable disposal charges for the volume and strength of the wastes discharged.

Applicant Name (print): Lisa Meyer

Signature: L. Meyer **Date:** 9/8/09

FOR MSD USE ONLY:

File Name: Mallinckrodt Inc ID No. 21120596-00 Sample Point No. 843

PIMS - Pretreatment Information Management System [PIMS St. Louis (PIMS)]

File Edit Records Worklists Reports/Letters Tools Window Help

General Info | Sample Points | Metering | Monitoring | Permits | Results | Compliance | Enforcement | Water Use | Spec Dischrg

Facility ID: 2112059600 Name: MALLINCKRODT INC [2112059600] SIU: ☑ Class: Categorical Industrial User

Results

Start Date: 01/01/2007 End Date: Apply

Events | Inspections | Sampling | Limit Comp | Violations | SMDE | Gen Rpts | **Notifications** | Surcharge | Surcharge Export

Notification Type	Date
Problem Discharge - 5 Day Written Follow Up	01/29/2009
Problem Discharge - Immediate Telephone No	01/26/2009
Problem Discharge - 5 Day Written Follow Up	01/02/2009
Problem Discharge - Immediate Telephone No	12/28/2008
Problem Discharge - 5 Day Written Follow Up	12/12/2008
Problem Discharge - Immediate Telephone No	12/10/2008
Problem Discharge - 5 Day Written Follow Up	11/19/2008
Problem Discharge - Immediate Telephone No	11/18/2008
Problem Discharge - Immediate Telephone No	11/12/2008
Problem Discharge - 5 Day Written Follow Up	11/05/2008
Problem Discharge - Immediate Telephone No	10/30/2008
Problem Discharge - 5 Day Written Follow Up	08/07/2008
Problem Discharge - Immediate Telephone No	08/01/2008
Self-Mon Discharge Viol - 1 Day Telephone N	09/03/2009

Text

Ken Coffman from Mallinckrodt left a telephone message for Doug Mendoza at 7 pm to report a pH excusion at SP010. It was for 70 minutes, with pH <5.5. The suspected cause was a caustic pump in the neutralization system that had gone down.

Save Successful | Sep 04, 2009 8:08:10 AM

start | Inbox - Microsoft Out... | Yahoo! Mail (diggdou... | PIMS - Pretreatment ... | 8:08 AM

MSD 012135

Metropolitan St. Louis Sewer District
Division of Environmental Compliance
10 East Grand Avenue
St. Louis, MO 63147-2913
Phone: 314 768 6200 www.stlmsd.com

September 3, 2009

Lisa Meyer
MALLINCKRODT
3600 North Second St.
St. Louis, MO 63147

Dear Ms. Meyer:

We have reviewed your application dated August 10, 2009 requesting approval to discharge 2,300 gallons of wastewater to the Metropolitan St. Louis Sewer District for treatment. This wastewater is the result of anywhere from two to ten batches of a new pharmaceutical product under development in Building 97 at the Mallinckrodt facility located at 3600 North Second Street, St. Louis, Missouri. Information provided by you on the application indicates the test batches will generate approximately 300 gallons of wastewater, followed by 2,000 gallons of rinse water. Both the wastewater and rinse water are subject to the categorical pretreatment standards in 40 CFR 439, Subpart C (439.37 PSNS). You also indicated that, prior to discharge to one of the facility's Pharmaceutical Effluent Guideline (PEG) steam strippers, a representative wastewater sample from each batch of the new pharmaceutical product and the subsequent rinse water will be submitted for laboratory analysis of cyanide to demonstrate compliance with the categorical pretreatment standards outlined in 40 CFR 439.37. We understand that after passing through the PEG steam stripper, the wastewater will be discharged through sampling point 010.

Based on the information provided, this wastewater may exhibit chloroform concentrations that exceed the screening levels that indicate a potential for generation of gases, fumes, or vapors at toxic levels in the sewer. However, when this wastewater is mixed with the facility's normal discharge, the concentration of chloroform in the total flow is expected to be below the screening level. Provided there are no other significant onsite sources of chloroform, which could cause exceedences of the screening level for the total wastewater flow, and upon receipt and review of each laboratory analytical report for cyanide, this wastewater is approved for discharge into a sanitary sewer on site. This approval is valid for 30 days from the date of this letter.

You must be certain the waste is discharged into a sanitary or combined sewer inlet only. This letter does not authorize any discharge to a separate storm sewer, or to any watercourse, as any such discharge would be in violation of state and federal laws. **Please notify me at the number below when the discharge is to commence.**

This discharge has been approved based upon the information and sample analysis you provided, and is subject to the conditions stated above. This approval may be revoked by the District at any time if any of the information is found to be incorrect, or if the conditions of this approval are violated. Also, if the discharge causes any operational or maintenance problem within the District's collection or treatment system, or results in violations of any conditions of the District's NPDES permit, Mallinckrodt will be considered responsible for damages.

If you have any questions, please call me at (314)436-8755.

Sincerely,
METROPOLITAN ST. LOUIS SEWER DISTRICT

Steven M. Grace

Steve Grace
Environmental Assistant Engineer

bv

pc: Roland Biehl
File: IU (2112-0596-00), Mallinckrodt, 3600 North Second Street, St. Louis, Missouri

C1A

SD EVALUATION CHECKLIST - ON SITE

APPLICATION INFORMATION

Source Name: Mallinckrodt, Inc.

Premise Address: 3600 N. Second St.

Evaluated by: SMG

Date: 9/3/09

Send approval letter to applicant

Application Dated: 8/10/09 Received: 8/14/09 All Requested Info. Received: 9/1/09

SOURCE FILING/DESCRIPTION

1 - Source in PIMS? (Y) / N

2 - If No, on IU Cross-Ref list? * Y / N

3 - If No, MSD Account # from E-CIS? Y / N

4 - If none, on "Source" list (pre-IMS)? ** Y / N

5 - If No, assigned SOUR# from PIMS.

* o:\costrecovery\cross reference xls file

** o:\costrecovery\sourlist xls file

SOURCE TYPE (circle): (IU) / Dead IU / SD

INDUSTRY ID: 2120596-00

Sample Point: No. Assigned: 846 Description: wastewater from a new pharmaceutical product under development

Normal WW flow from premise? N/A _____ ccf/month, 2,992,101 GPD, _____ GPH.
↳ from SP010

REGULATORY STATUS

Is waste a Hazardous Waste? (N) / Y

Categorical standards apply? N / (Y) 40 CFR 439.37 (PSNS)

Contain PCB/ asbestos/ radioactive/ dioxin/ used oil? (N) / Y

Regulatory Agency Oversight? (N) / Y

DISCHARGE CONSIDERATIONS At MSD's connection:

Ordinance Limits (12559, p32) exceeded? (N) / Y

Ordinance other limits exceeded (dye, flash pt <140F, temp >140F, obstruction, nuisance foaming/odor, corrosion causing): (N) / Y

Water Quality Standard exceeded? (N) / Y

Fumes in sewer exceed PEL/TLV limits? N / (Y) calc. chloroform conc. exceed Fume Tox. screening levels; however, due to normal WW flow, no discharge rate required

Vapors in sewer exceed 10% of LEL? (N) / Y

RECOMMENDATION: APPROVE / DENY (cc WWTP Mgr for timed discharge)

APPROVAL CONDITIONS:

Timed Discharge (COD/BOD/WQ/foam): (N) / Y Limit = _____ gal/hour

Require Treatment before Discharge? (N) / Y

Laboratory analysis fee due? (N) / Y $_____

SMR required? N / (Y) Frequency/analysis: lab analysis of cyanide to demonstrate compliance w/40 CFR 439.37

SMR log: (N/A) / Remediation.xls / Nonremediation.xls

Volume Billing applies (water unmetered or credited)? (N) / Y

Bill High Strength? (N) / Y Yes, If use >60,000 gal/month water ___and, > norm WW strgth

Surcharge calculation attached: (N/A) / N / Y

Expiration log updated: (N/A) / N / Y

O:\CostRecovery\Special Discharge\C1a.Checklist.doc

Steve Grace

From: Meyer, Lisa A [Lisa.Meyer@Covidien.com]
Sent: Friday, August 21, 2009 10:14 AM
To: Steve Grace
Subject: Covidien - Special Discharge B97

Steve,
To answer your question about removal efficiency in our PEG (Pharmaceutical Effluent Guideline) steam stripper:

- Soluble Hazardous Air Pollutants (HAPS) removal rate is 90%
- Partially Soluble HAPS (i.e. chloroform, toluene) removal rate is 99%

Hope this answers your question. Have a good weekend.

Lisa

Lisa Meyer
Senior HSE Engineer
Covidien
Mallinckrodt
3600 North Second Street
St. Louis, MO 63147
USA

314.654.3374 office
314.848.3772 pager
314.654.1251 fax

Together we can make a difference. Consider the environment before choosing to print this message.

Mallinckrodt

300 gals. of wastewater

75% water	- 225 gals.	- 750,000 mg/L
12% Am. Ace.	- 36 gals	- 120,000 mg/L
5% Pot. Ace.	- 15 gals.	- 50,000 mg/L
4% Am. Bro.	- 12 gals.	- 40,000 mg/L
2% Urea	- 6 gals.	- 20,000 mg/L
1% Chloro.	- 3 gals.	- 10,000 mg/L
1% API	- 3 gals.	- 10,000 mg/L

calc. concs. going into PEG steam stripper

per L.M. email on 8/21/09, PEG steam stripper removal rate for partially soluble HAPS like chloroform is 99% & for soluble HAPS is 90%; from PEG stripper, it goes to SP010 for pH neutralization & then discharge; given this, the calc. concs. going to SP010 for discharge based on above:

Am. Ace.	120,000 (0.10) = 12,000 mg/L
Pot. Ace.	50,000 (0.10) = 5,000 mg/L
Am. Bro.	40,000 (0.10) = 4,000 mg/L
Urea	20,000 (0.10) = 2,000 mg/L
Chloro.	10,000 (0.01) = 100 mg/L
API	

chloroform has the lowest fume tox. conc., so it is the driver for calc. onsite SD slow rate

On-Site Special Discharge Flow Rate Calculator

This calculator does not consider attributable concentrations from normal flow

1 GENERAL INFORMATION:

Date:	09/03/09
Calculated by:	Steve Grace
Source name:	Mallinckrodt, Inc.
Waste material:	New pharmaceutical product under development
Discharge volume:	300 gallons

2 PLANT DATA (as needed): 0 — does not conisder removal data, see HWRS acceptance caluclator

Treatment area: Bissell

	Flow (MGD)
Bissell	119
Coldwater	23
Fenton	5
Grand Glaize	16
Lemay	122
Lower Meramec	10
Missouri River	28

3 MINIMUM REQUIRED FLOW RATE:

SD Concentration =	100	mg/L
SD Limit =	0.41	mg/L
Normal Flow Rate =	124,671	GPH
Safety Factor =	10%	default is 10%, apply more as neccessary
SD Flow Rate =	**462**	**GPH**
SD Flow Rate =	**8**	**GPM**
Total discharge time =	**0.65**	**Hours**

Define the SD limit here = Fume toxicity - chloroform

Use normal flow, RF, upstream flow and plant flow, as applicable

Comments:

Normal Flow Rate at SP010 used to calulate SD flow rate

As discharge will be <1.0 hour, no discharge rate required

RECEIVED
AUG 11 2009
DIVISION OF
ENVIRONMENTAL COMPLIANCE

COVIDIEN

August 10, 2009

Mr. Steve Grace
St. Louis Metropolitan Sewer District
10 East Grand Ave
St. Louis, MO 63147

RE: Request for Special Discharge for Wastewater Generated from a New Pharmaceutical Manufacturing Operation in Building 97
MSD Permit 21120596 -2.1

Dear Mr. Grace,

Attached please find an Application for Special Discharge Approval for the wastewater from a new pharmaceutical process under development at the Covidien St. Louis Plant in Building 97. The wastewater generated from this process would be discharged to one of the plant's PEG (Pharmaceutical Effluent Guideline) steam strippers for treatment, SP920 or SP937, to the plant's pH neutralization system and then discharged to MSD via the plant's main outfall SP010.

Per our MSD permit 21120596 -2.1 Section II - Special Conditions, C. Special Certification and Reporting Requirements, C.6. Certification of No Cyanide under 439:

> The permittee has reported that Cyanide is not used or generated in any pharmaceutical manufacturing process subject under 40 CFR 439 at sampling points 080, 915, 920, 932, 935, 936 and 937. Therefore, pursuant to the standards in 40 CFR 439, the permittee is not subject to limitations or monitoring for Total Cyanide at these sampling points. Permittee shall include, with each quarterly self-monitoring report, a certification that Cyanide is not used or generated at sampling points 080, 915, 920, 932, 936 and 937.

One of the chemicals used in the manufacturing of this new pharmaceutical is cyanogen bromide (see attached MSDS). Per discussions with Doug Mendoza, prior to the discharge of the wastewater generated from this process to the PEG sewer, the wastewater must be tested for the presence of cyanide and must be within 33.5 mg/l Daily Maximum and 9.4 mg/l Monthly average limits.

COVIDIEN/MALLINCKRODT
3600 NORTH SECOND STREET
ST. LOUIS, MO 63147

TELEPHONE: 314-654-2000
FAX: 314-654-1251

COVIDIEN

The discharge will consists of a campaign of 2-10 batches resulting in an estimated total wastewater generated from a total of all the batches of 300 gallons. A tank cleanout will also be performed at the end of the campaign resulting in another 2000 gallons of wastewater. Total wastewater estimated from the new process is 2300 gallons.

All other components of the wastewater are described in the attached Special Discharge Application and all MSDS have also been attached for your information. After analytical data from the sampling of each batch of wastewater and the cleanout has been received and shown to be within MSD cyanide permit limitations, the wastewater would be sent to the PEG steam stripper, then to the plant's pH neutralization system before being discharged to MSD via SP010.

We would like to begin discharging wastewater from this process on September 1, 2009.

If you have any questions or need additional information, please contact me at 314.654.3374.

Sincerely,

Lisa Meyer
Senior HSE Engineer

Enclosures

cc: Mr. Doug Mendoza, MSD

COVIDIEN/MALLINCKRODT
3600 NORTH SECOND STREET
ST. LOUIS, MO 63147

TELEPHONE: 314-654-2000
FAX: 314-654-1251

Metropolitan St. Louis Sewer District

Phone No. (314) 436-8710

Division of Environmental Compliance, 10 East Grand Avenue, St. Louis, Missouri 63147 Fax No. (314) 436-8766

APPLICATION FOR SPECIAL DISCHARGE APPROVAL

I. WASTEWATER SOURCE IDENTIFICATION:

Site Name: Mallinckrodt

Premise Address: 3600 North 2nd St

City: St. Louis State: MO Zip: 63147

Owner: Mallinckrodt

Contact Person: Lisa Meyer

Title: Senior HSE Engineer

Phone: 314.654.3374 Fax: 314.654.1251

II. APPLICANT (mailing information):

Applicant Name: Lisa Meyer

Title: Senior HSE Engineer

Company Name: Mallinckrodt

Mailing Address: 3600 North 2nd St.

City: St. Louis State: MO Zip: 63147

Phone: 314.654.3374 Fax: 314.654.1251

III. A. MATERIAL TO BE DISCHARGED (check all applicable boxes):

1. Wastewater description/location: New pharmaceutical product under development in Bldg 97
2. Process/activity generating wastewater: One campaign of a new pharmaceutical product to be manufactured in Bldg 97. Campaign will consist of 2 to 10 batches resulting in a total of 300 gallons of wastewater. Cleanout of the process tank/equip after completion of campaign will generate an additional 2000 gallons of wastewater.
3. Physical and chemical composition: List all constituents, and known or potentially present regulated contaminants below.

☐ See separate listing enclosed, and/or ☐ See analytical results enclosed, and/or ☑ Material Safety Data Sheet enclosed.

DESCRIPTION	RANGE	UNIT
Water	75	%
Ammonium acetate	12	%
Potassium acetate	5	%
Ammonium bromide	4	%

DESCRIPTION *(continued)*	RANGE	UNIT
Urea	2	%
Chloroform / API	~~2~~ 1	%
	1	%

3 per phone call w/ Lisa Meyer @ Mallinckrodt on 9/1/09 SMG

4. Is this wastewater from a process subject to EPA's categorical standards in 40 CFR Subchapter N? ☑ Yes ☐ No
   a. If yes, the applicable standards are in: 40 CFR Part 439, Subpart C ☐ Existing source ☑ New source
5. Does this wastewater contain polychlorinated biphenyls, asbestos or radioactive material? ☐ Yes ☑ No
   a. If yes, describe:
6. Representative sample: ☐ Laboratory results attached, and/or ☐ Sample provided (1/2 gallon minimum, clear container)
   a. Sample collection point/location: Collection method:
   b. Sampler's name/Co.: Sample date/time:
   c. Attach chain of custody as available
7. Discharge will occur over the following time period: ☑ < 30 days ☐ ≥ Two years ☐ Other:
   a. Expected total volume of wastewater to be discharged over the time period above: 2300 Gallons
   b. Proposed discharge volume: 2300 Gallons, at a frequency of: ☐ One time ☐ Daily ☐ Weekly ☐ Monthly ☐ Once/three months ☐ Once/six months ☑ Other: Upon batch completion + cleanout
8. Pretreatment of wastewater prior to discharge: ☐ None ☑ Yes, describe: PEG steam stripper and plant pH neutralization prior to discharge through main outfall SP010.
   a. If yes, attach site plan, pretreatment system schematic, and design specifications.
9. Wastewater from a remediation project under: ☐ Superfund/CERCLA ☐ RCRA ☐ Voluntary program ☐ UST ☑ Not applicable
   a. If from a remediation project, briefly describe the past and present utilization of the property:

III.B. MATERIAL FROM UNDERGROUND STORAGE TANK SOURCE

☑ **Not applicable (go to Section IV)**

Please answer the following questions if you are requesting to discharge wastewater associated with an underground storage tank system.

1. a. Wastewater from: ☐ Inside UST(s) ☐ UST system pit ☐ Excavation outside UST system pit ☐ Monitoring well ☐ Groundwater remediation system

   b. UST project involves wastewater from: ☐ UST(s) closed in place ☐ UST(s) removed ☐ Remediation ☐ Upgrade ☐ Maintenance activities ☐ Well monitoring ☐ Other, explain: _____

   c. If wastewater is from a closure project, how long has UST(s) been out of service: _____ years

2. a. State assigned UST site identification number: _____ ☐ Not applicable

   b. Number of USTs affected: _____ ☐ Unknown

   c. For the UST(s) involved, their state identification number(s): _____ ☐ Not applicable

   d. Service Station Identification Number, as applicable: _____

3. Tank contents/former contents: ☐ Gasoline ☐ #2 diesel ☐ Used oil ☐ Unknown ☐ Other: _____

IV. DISCHARGE LOCATION

1. ☑ On-site. Describe proposed point of entry to sewer and the discharge rate (must be a sanitary or combined sewer): PEG steam stripper to plant sewer to main outfall SP010 _____ Note: Range of discharge must not surcharge sewer line.

2. ☐ Haul to MSD Bissell Point Hauled Waste Receiving Station at 10 E. Grand, St. Louis, MO.

   a. Transporters Name: _____ and MSD Hauler ID Number: _____

   b. Hazardous Waste Certification:

   For wastewater which is hauled to MSD's Bissell Point Hauled Waste Receiving Station, I hereby certify that to the best of my knowledge and belief, the above hauled waste is not classified as a RCRA "hazardous waste" as defined by the MDNR in 10 CSR 25 or USEPA in 40 CFR Part 261.

   Applicant Name (print): _____

   Signature: _____ **Date:** _____

ADDITIONAL INFORMATION:

See attached cover letter for additional information.

V. APPLICANT SIGNATURE AND CERTIFICATION

This application must be signed by the applicant: either the source contact, or a contractor or agent directly responsible for site activities.

I hereby certify that I am directly responsible for activities at the site regarding the wastewater to be discharged, and to the best of my knowledge and belief, based on appropriate inquiry, the information in this application is true, complete, and accurate. The samples or analyses submitted are representative of the materials to be discharged. If granted approval to discharge, I agree to abide by the MSD Ordinances, and all applicable federal, state and local regulations. I agree to pay the costs of any pre-approval analyses performed by MSD and to pay any applicable disposal charges for the volume and strength of the wastes discharged.

Applicant Name (print): Lisa Meyer

Signature: Lisa Meyer **Date:** 8/10/09

For MSD Use Only

File Name: [illegible] ID No. [illegible]-0591-00 Sample Point No. [illegible]

Metropolitan St. Louis Sewer District
Division of Environmental Compliance
10 East Grand Avenue
St. Louis, MO 63147-2913
Phone: 314.768 6200 www.stlmsd.com

September 1, 2009

Lisa Meyer
MALLINCKRODT
3600 North Second St.
St. Louis, MO 63147

Dear Ms. Meyer:

We have reviewed your application dated September 1, 2009 requesting approval to discharge 1,700 gallons of wastewater to the Metropolitan St. Louis Sewer District for treatment. This wastewater is 15% ethylene glycol solution at the building 250 Mallinckrodt facility located at 3600 North Second Street, St. Louis, Missouri. We understand that the wastewater will be discharged through sampling point 010.

Based on the information you provided, this wastewater meets MSD Ordinance 12559 standards and is approved for discharge into a sanitary sewer on site. Due to the high ethylene glycol concentration, the discharge is limited to 1,140 gallons per hour. This approval is valid for 30 days from the date of this letter.

You must be certain the waste is discharged into a sanitary or combined sewer inlet only. This letter does not authorize any discharge to a separate storm sewer, or to any watercourse, as any such discharge would be in violation of state and federal laws. **Please notify me at the number below when the discharge is to commence.**

For billing purposes, you must confirm the volume of this wastewater discharged to us, in writing, at the completion of the discharge. This report is due no later than 28 days after this approval expires. Please refer to this letter and include the date of the discharge when providing that figure. Under the provisions of Ordinance 12754, you will be billed by invoice at the billing rate in effect at the time of discharge. The current rate contained in MSD Ordinance 12754, is $275.76 per ton for COD over 600 mg/L. Please do not pay this amount until you receive our invoice.

This discharge has been approved based upon the information and sample analysis you provided, and is subject to the conditions stated above. This approval may be revoked by the District at any time if any of the information is found to be incorrect, or if the conditions of this approval are violated. Also, if the discharge causes any operational or maintenance problem within the District's collection or treatment system, or results in violations of any conditions of the District's NPDES permit, Mallinckrodt will be considered responsible for damages.

If you have any questions, please call me at (314) 436-8755.

Sincerely,
METROPOLITAN ST. LOUIS SEWER DISTRICT
Steven M. Grace
Steve Grace
Environmental Assistant Engineer

bv

pc: Roland Biehl

File: IU, MALLINCKRODT INC [2112059600]

C1A

SD EVALUATION CHECKLIST - ON SITE

APPLICATION INFORMATION

Source Name: Mallinckrodt Inc. Evaluated by: SMG

Premise Address: 3600 N. 2nd St. Date: 9/1/09

Send approval letter to applicant

Application Dated: 9/1/09 Received: 9/1/09 All Requested Info. Received: 9/1/09

SOURCE FILING/DESCRIPTION

1 - Source in PIMS? (Y) / N

2 - If No, on IU Cross-Ref list? * Y / N

3 - If No, MSD Account # from E-CIS? Y / N

4 - If none, on "Source" list (pre-IMS)? ** Y / N

5 - If No, assigned SOUR# from PIMS.

SOURCE TYPE (circle): (IU) / Dead IU / SD

INDUSTRY ID: 21120596-00

* o:\costrecovery\cross reference xls file

** o:\costrecovery\sourlist xls file

Sample Point: No. Assigned: 815 Description: 15% ethylene glycol solution at Bldg. 250

Normal WW flow from premise? N/A _____ ccf/month, 2,992,101 GPD, _____ GPH. @ SP010

REGULATORY STATUS

Is waste a Hazardous Waste? (N) / Y

Categorical standards apply? (N) / Y

Contain PCB/ asbestos/ radioactive/ dioxin/ used oil? (N) Y

Regulatory Agency Oversight? (N) / Y

DISCHARGE CONSIDERATIONS At MSD's connection:

Ordinance Limits (12559, p32) exceeded? (N) / Y

Ordinance other limits exceeded (dye, flash pt <140F, temp >140F, obstruction, nuisance foaming/odor, corrosion causing): (N) / Y

Water Quality Standard exceeded? (N) / Y

Fumes in sewer exceed PEL/TLV limits? (N) / Y

Vapors in sewer exceed 10% of LEL? (N) / Y

RECOMMENDATION: (APPROVE) / DENY (cc WWTP Mgr for timed discharge)

APPROVAL CONDITIONS:

Timed Discharge (COD/BOD/WQ/foam): N / (Y) Limit = 1,140 gal/hour

Require Treatment before Discharge? (N) / Y

Laboratory analysis fee due? (N) / Y $_____

SMR required? (N) / Y Frequency/analysis: _____

SMR log: (N/A) / Remediation.xls / Nonremediation.xls

Volume Billing applies (water unmetered or credited)? (N) / Y

Bill High Strength? N / (Y) Yes, If use >60,000 gal/month water ___and, > norm WW strgth

Surcharge calculation attached: N/A / N / (Y)

Expiration log updated: (N/A) / N / Y

O:\CostRecovery\Special Discharge\C1a.Checklist.doc

On-Site Special Discharge High Strength Flow Rate and Surcharge Calculator

1 GENERAL INFORMATION:

Date: 09/01/09
Calculated by: Steve Grace
Source name: Mallinckrodt Building 250
Waste material: 15% ethylene glycol from primary chiller system
Discharge volume: 1,700 gallons

2 STRENGTH INFORMATION:

Sample BOD =	0	mg/l =	0	lbs BOD to be discharged
Sample COD =	150,000	mg/l =	2127	lbs COD to be discharged
Sample TSS =	0	mg/l =	for surcharge calculation only	

3 PLANT DATA: 2010

Treatment area: Bissell

	Flow (MGD)	BOD (mg/L)	COD (mg/L)	BOD (lb/hr)	COD (lb/hr)	Max Loading = 10% BOD (lb/hr)	COD (lb/hr)
Bissell	**140**	**146**	**292**	**7,113**	**14,227**	**711**	**1,423**
Coldwater	26	188	377	1,704	3,408	170	341
Fenton	5	388	776	679	1,357	68	136
Grand Glaize	16	129	405	708	2,218	71	222
Lemay	131	78	210	3,531	9,584	353	958
Lower Meramec	13	124	409	543	1,785	54	179
Missouri River	27	280	559	2,671	5,341	267	534

4 MINIMUM REQUIRED FLOW RATE:

	BOD (hours	BOD (gpm)	COD (hours)	COD (gpm)
Bissell	**0.00**	**0**	**1.49**	**19**
Coldwater	0.00	0	6.24	5
Fenton	0.00	0	15.67	2
Grand Glaize	0.00	0	9.59	3
Lemay	0.00	0	2.22	13
Lower Meramec	0.00	0	11.91	2
Missouri River	0.00	0	3.98	7

5 SURCHARGE AND VOLUME BILLING

Is volume subject to billing? no (yes/no)
Ratio of BOD/COD = 0.00

(Sample BOD) - 300 = 0 mg/l subject to surcharge
(sample COD) - 600 = 149400 mg/l subject to surcharge
(sample TSS) - 300 = 0 mg/l subject to surcharge

If BOD/COD ratio <= 0.35, the following calculations use the COD value. Otherwise they use the BOD value

Current rates under Ordinance: 12754

Volume = $ 1.92 /CcF
BOD = $ 551.52 /ton
COD = $ 275.76 /ton
TSS = $ 218.90 /ton

Flow charge = $ - based on volume = 2 CcF
BOD surcharge = $ -
COD surcharge = $ 257.08
TSS surcharge = $ -
Total discharge charge = $ 257.08
Customer charge = $ 257.08 DEC charges special discharge customers for total charges > $20.00
Approximate charge/gallon = $ 0.17

Comments

require volume report for billing purposes

COVIDIEN

Facsimile Communication

To: Mr. Steve Grace
Company: MSD Environmental Compliance
Fax Number: 314.436.8766
Date: September 1, 2009

Number of Pages *(including cover sheet)*: 11

Health, Safety, Environmental

Lisa Meyer
Senior HSE Engineer

Covidien/Mallinckrodt
3600 N. Second St.
St. Louis, Missouri 63147

Telephone 314-654-3374
Facsimile 314-654-1251

- ☐ For your information
- X Please respond
- ☐ Urgent
- ☐ Confidential

Comments:

Dear Mr. Grace,

Attached please find an application for Special Discharge for 1700 gallons of a 15% ethylene glycol and water solution from Building 250. If you have any questions or need additional information, please contact me.

Thank you,

Lisa Meyer

Metropolitan St. Louis Sewer District

Phone No. (314) 436-8710
Division of Environmental Compliance, 10 East Grand Avenue, St. Louis, Missouri 63147 Fax No. (314) 436-8766

APPLICATION FOR SPECIAL DISCHARGE APPROVAL

I. WASTEWATER SOURCE IDENTIFICATION:

Site Name: Mallinckrodt
Premise Address: 3600 North 2nd St.
City: St. Louis State: MO Zip: 63147
Owner: Mallinckrodt
Contact Person: Lisa Meyer
Title: Senior HSE Engineer
Phone: 314.654.3374 Fax: 314.654.1251

II. APPLICANT (mailing information):

Applicant Name: Lisa Meyer
Title: Senior HSE Engineer
Company Name: Mallinckrodt
Mailing Address: 3600 North 2nd St.
City: St. Louis State: MO Zip: 63147
Phone: 314.654.3374 Fax: 314.654.1251

III. A. MATERIAL TO BE DISCHARGED (check all applicable boxes):

1. Wastewater description/location: Building 250 Ethylene glycol / water
2. Process/activity generating wastewater: Building 250 primary chiller
3. Physical and chemical composition: List all constituents, and known or potentially present regulated contaminants below.
   ☐ See separate listing enclosed, and/or ☐ See analytical results enclosed, and/or ☑ Material Safety Data Sheet enclosed.

DESCRIPTION	RANGE	UNIT
Ethylene Glycol	15	%
Water	85	%

DESCRIPTION *(continued)*	RANGE	UNIT

4. Is this wastewater from a process subject to EPA's categorical standards in 40 CFR Subchapter N? ☐ Yes ☑ No
   a. If yes, the applicable standards are in: 40 CFR Part _____, Subpart _____ ☐ Existing source ☐ New source
5. Does this wastewater contain polychlorinated biphenyls, asbestos or radioactive material? ☐ Yes ☑ No
   a. If yes, describe: _____
6. Representative sample: ☐ Laboratory results attached, and/or ☐ Sample provided (1/2 gallon minimum, clear container)
   a. Sample collection point/location: _____ Collection method: _____
   b. Sampler's name/Co.: _____ Sample date/time: _____
   c. Attach chain of custody as available
7. Discharge will occur over the following time period: ☑ < 30 days ☐ ≥ Two years ☐ Other: _____
   a. Expected total volume of wastewater to be discharged over the time period above: 1700 Gallons
   b. Proposed discharge volume: 1700 Gallons, at a frequency of: ☐ One time ☐ Daily ☐ Weekly ☐ Monthly ☐ Once/three months ☐ Once/six months ☑ Other: 150 gallons ASAP 1550 gallons on 9-4-09
8. Pretreatment of wastewater prior to discharge: ☐ None ☑ Yes, describe: pH adjust at plant outfall SP010
   a. If yes, attach site plan, pretreatment system schematic, and design specifications.
9. Wastewater from a remediation project under: ☐ Superfund/CERCLA ☐ RCRA ☐ Voluntary program ☐ UST ☑ Not applicable
   a. If from a remediation project, briefly describe the past and present utilization of the property: _____

III.B. MATERIAL FROM UNDERGROUND STORAGE TANK SOURCE

☑ **Not applicable (go to Section IV)**

Please answer the following questions if you are requesting to discharge wastewater associated with an underground storage tank system.

1. a. Wastewater from: ☐ Inside UST(s) ☐ UST system pit ☐ Excavation outside UST system pit ☐ Monitoring well ☐ Groundwater remediation system

   b. UST project involves wastewater from: ☐ UST(s) closed in place ☐ UST(s) removed ☐ Remediation ☐ Upgrade ☐ Maintenance activities ☐ Well monitoring ☐ Other, explain: _____

   c. If wastewater is from a closure project, how long has UST(s) been out of service: _____ years

2. a. State assigned UST site identification number: _____ ☐ Not applicable

   b. Number of USTs affected: _____ ☐ Unknown

   c. For the UST(s) involved, their state identification number(s): _____ ☐ Not applicable

   d. Service Station Identification Number, as applicable: _____

3. Tank contents/former contents: ☐ Gasoline ☐ #2 diesel ☐ Used oil ☐ Unknown ☐ Other: _____

IV. DISCHARGE LOCATION

1. ☑ On-site. Describe proposed point of entry to sewer and the discharge rate (must be a sanitary or combined sewer): _____

   B250 Plant sewer to main outfall SP010 _____ Note: Range of discharge must not surcharge sewer line.

2. ☐ Haul to MSD Bissell Point Hauled Waste Receiving Station at 10 E. Grand, St. Louis, MO.

   a. Transporters Name: _____ and MSD Hauler ID Number: _____

   b. Hazardous Waste Certification:

   For wastewater which is hauled to MSD's Bissell Point Hauled Waste Receiving Station, I hereby certify that to the best of my knowledge and belief, the above hauled waste is not classified as a RCRA "hazardous waste" as defined by the MDNR in 10 CSR 25 or USEPA in 40 CFR Part 261.

   Applicant Name (print): _____

   Signature: _____ **Date:** _____

ADDITIONAL INFORMATION:

_____

V. APPLICANT SIGNATURE AND CERTIFICATION

This application must be signed by the applicant: either the source contact, or a contractor or agent directly responsible for site activities.

I hereby certify that I am directly responsible for activities at the site regarding the wastewater to be discharged, and to the best of my knowledge and belief, based on appropriate inquiry, the information in this application is true, complete, and accurate. The samples or analyses submitted are representative of the materials to be discharged. If granted approval to discharge, I agree to abide by the MSD Ordinances, and all applicable federal, state and local regulations. I agree to pay the costs of any pre-approval analyses performed by MSD and to pay any applicable disposal charges for the volume and strength of the wastes discharged.

Applicant Name (print): Lisa A. Meyer

Signature: Lisa A. Meyer **Date:** 9/1/09

FOR MSD USE ONLY:

File Name: Mallinckrodt Inc. ID No. 21120596-00 Sample Point No. 815

SR
9-1-09

RE: Mallinckrodt 2112059600 - SP010 pH samples

From: Scott Rehmer
Sent: Monday, August 31, 2009 11:14 AM
To: Jason Gill
Cc: Doug Mendoza
Subject: RE: Mallinckrodt 2112059600 - SP010 pH samples

Jason,

It appears Mallinckrodt performs continuous pH monitoring at SP-010, which is fine. In their SMR's, they are reporting all excursions for each month subject to permit condition 1.A.7.

I have removed the individual pH readings from the last ten quarters (Q2-2009 back to Q1-2007). Prior to those quarters, the database looked just fine. I was able to "un-process," save, delete the selected sample dates, save, "process," and save again. Probably overkill, but it worked for me.

I will include special condition E.29, which addresses pH continuous monitoring, in their next permit revision or renewal, which will most likely be 2010.

Just so you know, on future inspection reports, Q.24 should be "Yes" for pH at 010 (it was recorded as "No" for the Nov. 2008 report).

Thanks.

Scott

From: Doug Mendoza
Sent: Monday, August 24, 2009 9:13 AM
To: Scott Rehmer
Subject: Mallinckrodt 2112059600 - SP010 pH samples....

Scott,

I should have caught/asked this after the first quarter, rather than the second, but....

All the pH samples at SP010, I cannot easily tell from the file if that is from continuous monitoring or discrete monitoring. It kind of looks like what they are doing is reporting all the exceedances for continuous monitoring, but I can't recall if they have continuous monitoring for pH at SP010. I seem to remember that they do not. If they do, they should be including a summary for total time outside the limits, and for events that exceeded 60 minutes. We wouldn't actually need all the individual exceedances. In fact, they shouldn't be entered in PIMS if it is from continuous monitoring.

However, if they were discrete readings, then they should be entered, like you did.

Can you please find out/let me know what is the case? I didn't see anything addressing SP010 pH in the permit special conditions, but I might have missed it.

Doug

SR
8-25

COVIDIEN

August 24, 2009

Mr. Scott Rehmer
Metropolitan St. Louis Sewer District
Department of Environmental Compliance
10 East Grand Avenue
St. Louis, MO 63147

Re: Mallinckrodt, Inc. – 385 Marshall Avenue, Webster Groves, MO
2009 3rd Quarter Self-Monitoring Report for Permit No. 1048568800 - 2

Dear Mr. Rehmer:

In accordance with the permit conditions of Mallinckrodt, Inc. Industrial Wastewater Discharge Permit, Section I, A.9, please find enclosed the self-monitoring report for the 3rd quarter of 2009.

Included in the quarterly report are compliance samples, daily flow rate, and pH data at SP001, compliance samples, daily flow rate, TTO and pH data at SP003, as well as certification statements required pursuant to the Special Conditions in Section II of our permit.

If you have any questions or require more detailed information, please contact me at (314) 654-8010.

Thank you,

Shannon Brown

Shannon Brown
Sr. HSE Engineer

RECEIVED
AUG 25 2009
DIVISION OF
ENVIRONMENTAL COMPLIANCE

385 Marshall Avenue
Webster Groves, MO
63119

METROPOLITAN ST. LOUIS SEWER DISTRICT
INDUSTRIAL USER SELF MONITORING REPORT

PART I: IDENTIFYING INFORMATION

Company Name: **MALLINCKRODT INC.**

Permit No: 1048568800-2 Effective Date: 11-01-2008 Expiration Date: 10-31-2013

Premise Address: 385 Marshall Avenue, 63119

Monitoring Period: ☐(JAN-MAR) ☐(APR-JUNE) X (JULY-SEPT) ☐(OCT-DEC)

Samples Collected By: S. Brown

Analyses Performed By: TekLab, INC.

PART II: ANALYTICAL RESULTS OF SELF MONITORING

MSD SAMPLE POINT REFERENCE NUMBERS ⇨		001		003				
DATES ON WHICH SAMPLES WERE COLLECTED ⇨		7-20-09		8-3-09				
TIMES AT WHICH SAMPLES WERE COLLECTED ⇨		11:15am		8:45am				
PARAMETER	LIMIT	RECORD SAMPLE TYPES (G, C, M OR E) AND RESULTS BELOW (G=grab, C=composite, M=measured flow, E=estimated flow)						UNITS
FLOW		E	12,190	E	2,870			GPD
Biochemical Oxygen Demand	****	G	16	G	18			mg/L
Chemical Oxygen Demand	****	G	27	G	<50			mg/L
Total Suspended Solids	****	G	24	G	26			mg/L
Oil and Grease	200	G	2	G	<5			mg/L
pH	5.5-11.5	G	9.39	G	7.92			S.U.
Temperature	60	G	27.3	G	24.4			Deg C
Total Toxic Organics	5.844	G	--- -- --	G	0.3213			mg/L
Acetone (daily max)	20.7	G	0.030		-------			mg/L
Acetone (monthly avg)	8.2	G	0.030		-------			mg/L
Ethyl Acetate (daily max)	20.7	G	ND		-------			mg/L
Ethyl Acetate (monthly avg)	8.2	G	ND		-------			mg/L
Isopropyl Acetate (daily max)	20.7	G	ND		-------			mg/L
Isopropyl Acetate (monthly avg)	8.2	G	ND		-------			mg/L
Methylene Chloride (daily max)	3.0	G	ND		-------			mg/L
Methylene Chloride (monthly avg)	0.7	G	ND		-------			mg/L
n-Amyl Acetate (daily max)	20.7	G	ND		-------			mg/L
n-Amyl Acetate (monthly avg)	8.2	G	ND		-------			mg/L

RECEIVED
AUG 25 2009
DIVISION OF
ENVIRONMENTAL COMPLIANCE

You must complete and sign the certification statements on the second page.

MSD 012153

PART III: SPECIAL CERTIFICATION STATEMENTS

Based on the special conditions contained in your discharge permit you may be required to certify the following.
Please review your permit and **PLACE YOUR INITIALS ON THE LINES NEXT TO THE CERTIFICATIONS**.

B	NO CHANGE IN WASTEWATER DISCHARGE AT ACTIVE CONNECTIONS WITHOUT SAMPLE POINTS
	For permit special conditions that waive monitoring at active connection points which are not specified as sample points in your permit, you are required to make the following certification: SNB I certify, since the last discharge monitoring report, there has been no change in the character of wastes discharged at those active connection points which are not specified in my permit.
D	GRAB IN LIEU OF COMPOSITE REPRESENTS WASTEWATER DISCHARGE
	For permit special conditions that authorize grab sample collection in lieu of composite sampling at any sample point(s), you are required to make the following certification for each report in which such authorized grab samples occur: SNB I certify the grab sample results in this report accurately represent our average daily discharge at sample points 001 and 003.

PART IV: GENERAL CERTIFICATION STATEMENTS

B	DISCHARGE MONITORING REPORT CERTIFICATION
	All permittees must sign and complete the information below: I certify under penalty of Law that this document and all attachments were prepared under my direction or supervision in accordance with a system designed to assure that qualified personnel properly gather and evaluate the information submitted. Based on my inquiry of the person or persons who manage the system, or those persons directly responsible for gathering the information, the information submitted is, to the best of my knowledge and belief, true, accurate, and complete. I am aware that there are significant penalties for submitting false information, including the possibility of fine and imprisonment for knowing violations. Print or type name of signing official: Shannon Brown Title: Sr. HSE Engineer Telephone: 314-654-8010 Signature: Shannon Brown Date: 8-24-09

RECEIVED
AUG 25 2009
DIVISION OF
ENVIRONMENTAL COMPLIANCE

TEKLAB, INC.

5445 HORSESHOE LAKE ROAD
COLLINSVILLE, ILLINOIS 62234

ENVIRONMENTAL TESTING LABORATORY

TEL: 618-344-1004
FAX: 618-344-1005

July 27, 2009

Shannon Brown
Covidien/Mallinckrodt, Inc.
385 Marshall Avenue
Webster Groves, MO 63119
TEL: (314) 654-8010
FAX: (314) 654-2715

ACCREDITED IN ACCORDANCE WITH

NELAP Accredited #100226

RE: SP001 - 3rd Q 2009

WorkOrder: 09070748

Dear Shannon Brown:

TEKLAB, INC received 1 sample on 7/20/2009 4:42:00 PM for the analysis presented in the following report.

Samples are analyzed on an as received basis unless otherwise requested and documented. The sample results contained in this report relate only to the requested analytes of interest as directed on the chain of custody. IL ELAP and NELAP accredited fields of testing are indicated by the letters NELAP under the Certification column.

All quality control criteria applicable to the test methods employed for this project have been satisfactorily met and are in accordance with NELAP except where noted. The following report shall not be reproduced, except in full, without the written approval of Teklab, Inc.

If you have any questions regarding these tests results, please feel free to call.

Sincerely,

Heather A. White

Heather A. White
Project Manager
(618)344-1004 ex 20

RECEIVED
AUG 25 2009
DIVISION OF
ENVIRONMENTAL COMPLIANCE

TEKLAB, INC.

5445 HORSESHOE LAKE ROAD
COLLINSVILLE, ILLINOIS 62234

ENVIRONMENTAL TESTING LABORATORY

TEL: 618-344-1004
FAX: 618-344-1005

Client: Covidien/Mallinckrodt, Inc.
Project: SP001 - 3rd Q 2009
LabOrder: 09070748
Report Date: 27-Jul-09

CASE NARRATIVE

Cooler Receipt Temp: 2.4 °C

State accreditations:

KS: NELAP #E-10347 | KY: UST #0073 | MO: DNR #00930 | AR: ADEQ #70-028-0

Qualifiers

DF - Dilution Factor	**B** - Analyte detected in the associated Method Blank	**C** - Client requested RL below PQL
RL - Reporting Limit	**J** - Analyte detected below reporting limits	**D** - Diluted out of sample
ND - Not Detected at the Reporting Limit	**R** - RPD outside accepted recovery limits	**E** - Value above quantitation range
Surr - Surrogate Standard added by lab	**S** - Spike Recovery outside accepted recovery limits	**H** - Holding time exceeded
TNTC - Too numerous to count (> 200 CFU)	**X** - Value exceeds Maximum Contaminant Level	**MI** - Matrix interference
Q - QC criteria failed or noncompliant CCV	**#** - Unknown hydrocarbon	**DNI** - Did not ignite
NELAP - IL ELAP and NELAP Accredited Field of Testing	**IDPH** - IL Dept. of Public Health	

RECEIVED
AUG 25 2009
DIVISION OF
ENVIRONMENTAL COMPLIANCE

TEKLAB, INC.

5445 HORSESHOE LAKE ROAD
COLLINSVILLE, ILLINOIS 62234

ENVIRONMENTAL TESTING LABORATORY

TEL: 618-344-1004
FAX: 618-344-1005

LABORATORY RESULTS

Client: Covidien/Mallinckrodt, Inc.
WorkOrder: 09070748
Lab ID: 09070748-001
Report Date: 27-Jul-09

Client Project: SP001 - 3rd Q 2009
Client Sample ID: SP-001 3rd Q 2009
Collection Date: 7/20/2009 11:15:00 AM
Matrix: WASTE WATER

Analyses	Certification	RL	Qual	Result	Units	DF	Date Analyzed	Analyst
EPA 1664A								
Hexane Extractable Material	NELAP	5	J	**2**	mg/L	1	7/21/2009 12:30:00 PM	HMH
EPA 600 410.4								
Chemical Oxygen Demand	NELAP	50	J	**27**	mg/L	1	7/22/2009 6:50:00 AM	HMH
EPA 600 624, VOLATILE ORGANIC COMPOUNDS BY GC/MS								
Acetone		50.0	J	**30**	µg/L	1	7/21/2009 5:45:00 PM	CCF
Ethyl acetate		5.0		**ND**	µg/L	1	7/21/2009 5:45:00 PM	CCF
Isopropyl acetate		5.0		**ND**	µg/L	1	7/21/2009 5:45:00 PM	CCF
Methylene chloride	NELAP	5.0		**ND**	µg/L	1	7/21/2009 5:45:00 PM	CCF
n-Amyl acetate		5.0		**ND**	µg/L	1	7/21/2009 5:45:00 PM	CCF
Surr: 1,2-Dichloroethane-d4		74.7-129		**101.3**	%REC	1	7/21/2009 5:45:00 PM	CCF
Surr: 4-Bromofluorobenzene		86-119		**102.5**	%REC	1	7/21/2009 5:45:00 PM	CCF
Surr: Dibromofluoromethane		81.7-123		**101.3**	%REC	1	7/21/2009 5:45:00 PM	CCF
Surr: Toluene-d8		84.3-114		**96.1**	%REC	1	7/21/2009 5:45:00 PM	CCF
STANDARD METHOD 18TH ED. 4500-H B, LABORATORY ANALYZED								
Lab pH	NELAP	1.00		**9.39**		1	7/20/2009 7:59:00 PM	NJM
STANDARD METHODS 18TH ED. 2540 D								
Total Suspended Solids	NELAP	6		**24**	mg/L	1	7/20/2009 6:00:00 PM	MAB
STANDARD METHODS 18TH ED. 5210 B								
Biochemical Oxygen Demand	NELAP	5		**16**	mg/L	1	7/20/2009 5:20:00 PM	JMT

Sample Narrative

RECEIVED
AUG 25 2009
DIVISION OF
ENVIRONMENTAL COMPLIANCE

TEKLAB, INC.

5445 HORSESHOE LAKE ROAD
COLLINSVILLE, ILLINOIS 62234

ENVIRONMENTAL TESTING LABORATORY

TEL: 618-344-1004
FAX: 618-344-1005

RECEIVING CHECK LIST

Client: Covidien/Mallinckrodt, Inc.
Project: SP001 - 3rd Q 2009
Lab Order: 09070748
Report Date: 27-Jul-09

Carrier: Terry Hattan

Received By: EC

Completed by: Marvin L. Darling II
On: 20-Jul-09
Marvin L. Darling

Reviewed by: Heather A. White
On: 21-Jul-09
Heather A. White

Pages to follow: Chain of custody 1 Extra pages included 0

Shipping container/cooler in good condition?	Yes ☑	No ☐	Not Present ☐	Temp °C 2.4
Type of thermal preservation?	None ☐	Ice ☑	Blue Ice ☐	Dry Ice ☐
Chain of custody present?	Yes ☑	No ☐		
Chain of custody signed when relinquished and received?	Yes ☑	No ☐		
Chain of custody agrees with sample labels?	Yes ☑	No ☐		
Samples in proper container/bottle?	Yes ☑	No ☐		
Sample containers intact?	Yes ☑	No ☐		
Sufficient sample volume for indicated test?	Yes ☑	No ☐		
All samples received within holding time?	Yes ☑	No ☐		
Reported field parameters measured:	Field ☐	Lab ☑	NA ☐	
Container/Temp Blank temperature in compliance?	Yes ☑	No ☐		
When thermal preservation is required, samples are compliant with a temperature between 0.1°C - 6.0°C, or when samples are received on ice the same day as collected.				
Water - VOA vials have zero headspace?	Yes ☑	No ☐	No VOA vials submitted ☐	
Water - pH acceptable upon receipt?	Yes ☑	No ☐		

Any No responses must be detailed below or on the COC.

RECEIVED
AUG 25 2009
DIVISION OF
ENVIRONMENTAL COMPLIANCE

IL ELAP and NELAP Accredited - Accreditation #100226

MSD 012158

CHAIN OF CUSTODY

pg. ____ of ____ Work Order # 09070748

TEKLAB, INC. 5445 Horseshoe Lake Road ~ Collinsville, IL 62234 ~ Phone: (618) 344-1004 ~ Fax: (618) 344-1005

Client: Covidien / Mallinckrodt
Address: 385 Marshall Ave.
City / State / Zip: Webster Groves, MO 63119
Contact: Shannon Brown Phone: 314-654-8010
E-Mail: Shannon.Brown@Covidien.com Fax: 314-654-2715

Samples on: ☒ Ice ☐ Blue Ice ☐ No Ice 2.9 °C
Preserved in: ☐ Lab ☒ Field
FOR LAB USE ONLY
Lab Notes: OB 7/20/09
Comments: headspace OK OB 7/20/09
Teklab, Inc.
Courier Pick Up

- Are these samples known to be involved in litigation? If yes, a surcharge will apply. ☐ Yes ☐ No
- Are these samples known to be hazardous? ☐ Yes ☐ No
- Are there any required reporting limits to be met on the requested analysis? If yes, please provide limits in comment section. ☐ Yes ☐ No

Project Name / Number:
Sample Collector's Name: Shannon Brown
Results Requested: ☐ Standard ☐ 1-2 Day (100% Surcharge) ☐ Other_____ ☐ 3 Day (50% Surcharge)
Billing Instructions:

Lab Use Only	Sample Identification	Date/Time Sampled	# and Type of Containers: UNPRES	HNO_3	NaOH	H_2SO_4	HCL	MeOH	$NaHSO_4$	Other	MATRIX: Water	Drinking Water	Soil	Sludge	Sp. Waste	INDICATE ANALYSIS REQUESTED: BOD	TSS	PH	Oil & Grease	COD	Acrolein	Ethyl Acetate	Methylene Chloride	n-Amyl Acetate	Isopropyl Acetate		
09070748-01	SP-001 3rd Q 2009	7-20-09 11:15	X								X					X	X	X									
	SP-001 3rd Q 2009	7-20-09 11:15				X					X								X								
	SP-001 3rd Q 2009	7-20-09 1115				X					X									X							
	SP-001 3rd Q 2009	7-20-09 1115					X				X										X	X	X	X	X		

Relinquished By	Date / Time	Received By	Date / Time
	7/20/09 1300		7/20/09 1300
	7/20/09 1642		7/20/09 1642

The individual signing this agreement on behalf of client acknowledges that he/she has read and understands the terms and conditions of this agreement, on the reverse side, and that he/she has the authority to sign on behalf of client.

WHITE & YELLOW – LAB PINK – SAMPLER'S COPY

RECEIVED AUG 26 2009 DIVISION OF ENVIRONMENTAL COMPLIANCE

MSD 012159

TEKLAB, INC.

5445 HORSESHOE LAKE ROAD
COLLINSVILLE, ILLINOIS 62234

ENVIRONMENTAL TESTING LABORATORY

TEL: 618-344-1004
FAX: 618-344-1005

August 21, 2009

Shannon Brown
Covidien/Mallinckrodt, Inc.
385 Marshall Avenue
Webster Groves, MO 63119
TEL: (314) 654-8010
FAX: (314) 654-2715

ACCREDITED IN ACCORDANCE WITH

NELAP Accredited #100226

RE: SP003 3rd Q 2009

WorkOrder: 09080047

Dear Shannon Brown:

TEKLAB, INC received 1 sample on 8/3/2009 3:11:00 PM for the analysis presented in the following report.

Samples are analyzed on an as received basis unless otherwise requested and documented. The sample results contained in this report relate only to the requested analytes of interest as directed on the chain of custody. IL ELAP and NELAP accredited fields of testing are indicated by the letters NELAP under the Certification column.

All quality control criteria applicable to the test methods employed for this project have been satisfactorily met and are in accordance with NELAP except where noted. The following report shall not be reproduced, except in full, without the written approval of Teklab, Inc.

If you have any questions regarding these tests results, please feel free to call.

Sincerely,

Heather A. White

Heather A. White
Project Manager
(618)344-1004 ex 20

RECEIVED
AUG 25 2009
DIVISION OF
ENVIRONMENTAL COMPLIANCE

TEKLAB, INC.

5445 HORSESHOE LAKE ROAD
COLLINSVILLE. ILLINOIS 62234

ENVIRONMENTAL TESTING LABORATORY

TEL: 618-344-1004
FAX: 618-344-1005

Client: Covidien/Mallinckrodt, Inc.
Project: SP003 3rd Q 2009
LabOrder: 09080047
Report Date: 21-Aug-09

CASE NARRATIVE

Cooler Receipt Temp: 6.0 °C

State accreditations:

KS: NELAP #E-10347 | KY: UST #0073 | MO: DNR #00930 | AR: ADEQ #70-028-0

Qualifiers

DF - Dilution Factor	**B** - Analyte detected in the associated Method Blank	**C** - Client requested RL below PQL
RL - Reporting Limit	**J** - Analyte detected below reporting limits	**D** - Diluted out of sample
ND - Not Detected at the Reporting Limit	**R** - RPD outside accepted recovery limits	**E** - Value above quantitation range
Surr - Surrogate Standard added by lab	**S** - Spike Recovery outside accepted recovery limits	**H** - Holding time exceeded
TNTC - Too numerous to count (> 200 CFU)	**X** - Value exceeds Maximum Contaminant Level	**MI** - Matrix interference
Q - QC criteria failed or noncompliant CCV	**#** - Unknown hydrocarbon	**DNI** - Did not ignite
NELAP - IL ELAP and NELAP Accredited Field of Testing	**IDPH** - IL Dept. of Public Health	

RECEIVED
AUG 25 2009
DIVISION OF
ENVIRONMENTAL COMPLIANCE

TEKLAB, INC.

5445 HORSESHOE LAKE ROAD
COLLINSVILLE, ILLINOIS 62234

ENVIRONMENTAL TESTING LABORATORY

TEL: 618-344-1004
FAX: 618-344-1005

LABORATORY RESULTS

Client: Covidien/Mallinckrodt, Inc.
WorkOrder: 09080047
Lab ID: 09080047-001
Report Date: 21-Aug-09

Client Project: SP003 3rd Q 2009
Client Sample ID: SP-003 3rd Q2009
Collection Date: 8/3/2009 8:45:00 AM
Matrix: AQUEOUS

Analyses	Certification	RL	Qual	Result	Units	DF	Date Analyzed	Analyst
EPA 100.2 ASBESTOS IN WATER								
# Asbestos Fibers	0	0		**See Attached**		1	8/11/2009	SUB
# Non-Asbestos Fibers	0	0		**See Attached**		1	8/11/2009	SUB
Concentration of Asbestos Fibers	0	0		**See Attached**	MFL	1	8/11/2009	SUB
EPA 1664A								
Hexane Extractable Material	NELAP	5		**< 5**	mg/L	1	8/4/2009 5:00:00 PM	HMH
EPA 600 245.1 (TOTAL)								
Mercury	NELAP	0.00020		**< 0.00020**	mg/L	1	8/6/2009	ALU
EPA 600 4.1.4, 200.7R4.4, METALS BY ICP (TOTAL)								
Antimony	NELAP	0.0500		**< 0.0500**	mg/L	1	8/4/2009 5:34:32 PM	LAL
Arsenic	NELAP	0.0250		**< 0.0250**	mg/L	1	8/4/2009 5:34:32 PM	LAL
Beryllium	NELAP	0.0010		**< 0.0010**	mg/L	1	8/4/2009 5:34:32 PM	LAL
Cadmium	NELAP	0.0020		**< 0.0020**	mg/L	1	8/4/2009 5:34:32 PM	LAL
Chromium	NELAP	0.0100		**< 0.0100**	mg/L	1	8/4/2009 5:34:32 PM	LAL
Copper	NELAP	0.0100		**0.0163**	mg/L	1	8/4/2009 5:34:32 PM	LAL
Lead	NELAP	0.0400		**< 0.0400**	mg/L	1	8/4/2009 5:34:32 PM	LAL
Nickel	NELAP	0.0100		**< 0.0100**	mg/L	1	8/4/2009 5:34:32 PM	LAL
Selenium	NELAP	0.0500		**< 0.0500**	mg/L	1	8/4/2009 5:34:32 PM	LAL
Silver	NELAP	0.0100		**< 0.0100**	mg/L	1	8/4/2009 5:34:32 PM	LAL
Thallium	NELAP	0.0500		**< 0.0500**	mg/L	1	8/4/2009 5:34:32 PM	LAL
Zinc	NELAP	0.0100		**0.0499**	mg/L	1	8/4/2009 5:34:32 PM	LAL
EPA 600 410.4								
Chemical Oxygen Demand	NELAP	50		**< 50**	mg/L	1	8/5/2009 8:55:00 AM	HMH
EPA 600 608, CHLORINATED PESTICIDES & PCBS BY GC/ECD								
4,4'-DDT	NELAP	0.05		**ND**	µg/L	1	8/5/2009 8:15:00 PM	ALB
Aldrin	NELAP	0.05		**ND**	µg/L	1	8/5/2009 8:15:00 PM	ALB
Dieldrin	NELAP	0.05		**ND**	µg/L	1	8/5/2009 8:15:00 PM	ALB
Endosulfan I	NELAP	0.05		**ND**	µg/L	1	8/5/2009 8:15:00 PM	ALB
Endosulfan II	NELAP	0.05		**ND**	µg/L	1	8/5/2009 8:15:00 PM	ALB
Endosulfan sulfate	NELAP	0.05		**ND**	µg/L	1	8/5/2009 8:15:00 PM	ALB
Endrin	NELAP	0.05		**ND**	µg/L	1	8/5/2009 8:15:00 PM	ALB
Endrin aldehyde	NELAP	0.05		**ND**	µg/L	1	8/5/2009 8:15:00 PM	ALB
Endrin Ketone		0.05		**ND**	µg/L	1	8/5/2009 8:15:00 PM	ALB
Heptachlor	NELAP	0.05		**ND**	µg/L	1	8/5/2009 8:15:00 PM	ALB
Heptachlor epoxide	NELAP	0.05		**ND**	µg/L	1	8/5/2009 8:15:00 PM	ALB
Toxaphene	NELAP	0.50		**ND**	µg/L	1	8/5/2009 8:15:00 PM	ALB
Chlordane	NELAP	0.05		**ND**	µg/L	1	8/5/2009 8:15:00 PM	ALB
Polychlorinated Biphenyls (Total)	NELAP	1.00		**ND**	µg/L	1	8/5/2009 12:33:00 PM	HE
Surr: Decachlorobiphenyl		5.54-150		**27.8**	%REC	1	8/5/2009 8:15:00 PM	ALB

RECEIVED
AUG 25 2009
DIVISION OF
ENVIRONMENTAL COMPLIANCE

TEKLAB, INC.

5445 HORSESHOE LAKE ROAD
COLLINSVILLE. ILLINOIS 62234

ENVIRONMENTAL TESTING LABORATORY

TEL: 618-344-1004
FAX: 618-344-1005

LABORATORY RESULTS

Client: Covidien/Mallinckrodt, Inc.
WorkOrder: 09080047
Lab ID: 09080047-001
Report Date: 21-Aug-09

Client Project: SP003 3rd Q 2009
Client Sample ID: SP-003 3rd Q2009
Collection Date: 8/3/2009 8:45:00 AM
Matrix: AQUEOUS

Analyses	Certification	RL	Qual	Result	Units	DF	Date Analyzed	Analyst
EPA 600 608, CHLORINATED PESTICIDES & PCBS BY GC/ECD								
Surr: Decachlorobiphenyl		5.54-150		**30.0**	%REC	1	8/5/2009 12:33:00 PM	HE
Surr: Tetrachloro-m-xylene		13-129		**44.2**	%REC	1	8/5/2009 8:15:00 PM	ALB
Surr: Tetrachloro-m-xylene		13-129		**39.9**	%REC	1	8/5/2009 12:33:00 PM	HE
EPA 600 624, VOLATILE ORGANIC COMPOUNDS BY GC/MS								
1,1,1-Trichloroethane	NELAP	5.0		**ND**	µg/L	1	8/5/2009 3:11:00 PM	TAL
1,1,2,2-Tetrachloroethane	NELAP	5.0		**ND**	µg/L	1	8/5/2009 3:11:00 PM	TAL
1,1,2-Trichloroethane	NELAP	5.0		**ND**	µg/L	1	8/5/2009 3:11:00 PM	TAL
1,1-Dichloroethane	NELAP	5.0		**ND**	µg/L	1	8/5/2009 3:11:00 PM	TAL
1,1-Dichloroethene	NELAP	5.0		**ND**	µg/L	1	8/5/2009 3:11:00 PM	TAL
1,2-Dichlorobenzene	NELAP	5.0		**ND**	µg/L	1	8/5/2009 3:11:00 PM	TAL
1,2-Dichloroethane	NELAP	5.0		**ND**	µg/L	1	8/5/2009 3:11:00 PM	TAL
1,2-Dichloropropane	NELAP	5.0		**ND**	µg/L	1	8/5/2009 3:11:00 PM	TAL
1,3-Dichlorobenzene	NELAP	5.0		**ND**	µg/L	1	8/5/2009 3:11:00 PM	TAL
1,4-Dichlorobenzene	NELAP	5.0		**ND**	µg/L	1	8/5/2009 3:11:00 PM	TAL
2-Chloroethyl vinyl ether	NELAP	20.0		**ND**	µg/L	1	8/5/2009 3:11:00 PM	TAL
Acrolein	NELAP	100		**ND**	µg/L	1	8/5/2009 3:11:00 PM	TAL
Acrylonitrile	NELAP	5.0		**ND**	µg/L	1	8/5/2009 3:11:00 PM	TAL
Benzene	NELAP	2.0		**ND**	µg/L	1	8/5/2009 3:11:00 PM	TAL
Bromodichloromethane	NELAP	5.0	J	**1.1**	µg/L	1	8/5/2009 3:11:00 PM	TAL
Bromoform	NELAP	5.0		**ND**	µg/L	1	8/5/2009 3:11:00 PM	TAL
Bromomethane	NELAP	10		**ND**	µg/L	1	8/5/2009 3:11:00 PM	TAL
Carbon tetrachloride	NELAP	5.0		**ND**	µg/L	1	8/5/2009 3:11:00 PM	TAL
Chlorobenzene	NELAP	5.0		**ND**	µg/L	1	8/5/2009 3:11:00 PM	TAL
Chloroethane	NELAP	10		**ND**	µg/L	1	8/5/2009 3:11:00 PM	TAL
Chloroform	NELAP	5.0		**5.8**	µg/L	1	8/5/2009 3:11:00 PM	TAL
Chloromethane	NELAP	10		**ND**	µg/L	1	8/5/2009 3:11:00 PM	TAL
cis-1,2-Dichloroethene		0		**ND**	µg/L	1	8/5/2009 3:11:00 PM	TAL
cis-1,3-Dichloropropene	NELAP	5.0		**ND**	µg/L	1	8/5/2009 3:11:00 PM	TAL
Dibromochloromethane	NELAP	5.0		**ND**	µg/L	1	8/5/2009 3:11:00 PM	TAL
Ethylbenzene	NELAP	5.0		**ND**	µg/L	1	8/5/2009 3:11:00 PM	TAL
Methylene chloride	NELAP	5.0		**ND**	µg/L	1	8/5/2009 3:11:00 PM	TAL
Tetrachloroethene	NELAP	5.0		**ND**	µg/L	1	8/5/2009 3:11:00 PM	TAL
Toluene	NELAP	5.0		**ND**	µg/L	1	8/5/2009 3:11:00 PM	TAL
trans-1,2-Dichloroethene	NELAP	5.0		**ND**	µg/L	1	8/5/2009 3:11:00 PM	TAL
trans-1,3-Dichloropropene	NELAP	5.0		**ND**	µg/L	1	8/5/2009 3:11:00 PM	TAL
Trichloroethene	NELAP	5.0		**ND**	µg/L	1	8/5/2009 3:11:00 PM	TAL
Vinyl chloride	NELAP	2.0		**ND**	µg/L	1	8/5/2009 3:11:00 PM	TAL
Surr: 1,2-Dichloroethane-d4		74.7-129		**101.8**	%REC	1	8/5/2009 3:11:00 PM	TAL

RECEIVED
AUG 25 2009
DIVISION OF
ENVIRONMENTAL COMPLIANCE

TEKLAB, INC.

5445 HORSESHOE LAKE ROAD
COLLINSVILLE, ILLINOIS 62234

ENVIRONMENTAL TESTING LABORATORY

TEL: 618-344-1004
FAX: 618-344-1005

LABORATORY RESULTS

Client: Covidien/Mallinckrodt, Inc.
WorkOrder: 09080047
Lab ID: 09080047-001
Report Date: 21-Aug-09

Client Project: SP003 3rd Q 2009
Client Sample ID: SP-003 3rd Q2009
Collection Date: 8/3/2009 8:45:00 AM
Matrix: AQUEOUS

Analyses	Certification	RL	Qual	Result	Units	DF	Date Analyzed	Analyst
EPA 600 624, VOLATILE ORGANIC COMPOUNDS BY GC/MS								
Surr: 4-Bromofluorobenzene		86-119		101.6	%REC	1	8/5/2009 3:11:00 PM	TAL
Surr: Dibromofluoromethane		81.7-123		100.8	%REC	1	8/5/2009 3:11:00 PM	TAL
Surr: Toluene-d8		84.3-114		97.9	%REC	1	8/5/2009 3:11:00 PM	TAL
EPA 600 625, SEMI-VOLATILE ORGANIC COMPOUNDS BY GC/MS								
1,2,4-Trichlorobenzene	NELAP	0.020		ND	mg/L	2	8/4/2009 10:55:00 AM	DMH
1,2-Diphenylhydrazine		0.020		ND	mg/L	2	8/4/2009 10:55:00 AM	DMH
2,4,6-Trichlorophenol	NELAP	0.020		ND	mg/L	2	8/4/2009 10:55:00 AM	DMH
2,4-Dichlorophenol	NELAP	0.020		ND	mg/L	2	8/4/2009 10:55:00 AM	DMH
2,4-Dimethylphenol	NELAP	0.020		ND	mg/L	2	8/4/2009 10:55:00 AM	DMH
2,4-Dinitrophenol	NELAP	0.040		ND	mg/L	2	8/4/2009 10:55:00 AM	DMH
2,4-Dinitrotoluene	NELAP	0.020		ND	mg/L	2	8/4/2009 10:55:00 AM	DMH
2,6-Dinitrotoluene	NELAP	0.020		ND	mg/L	2	8/4/2009 10:55:00 AM	DMH
2-Chloronaphthalene	NELAP	0.020		ND	mg/L	2	8/4/2009 10:55:00 AM	DMH
2-Chlorophenol	NELAP	0.020		ND	mg/L	2	8/4/2009 10:55:00 AM	DMH
2-Nitrophenol	NELAP	0.040		ND	mg/L	2	8/4/2009 10:55:00 AM	DMH
3,3'-Dichlorobenzidine	NELAP	0.020		ND	mg/L	2	8/4/2009 10:55:00 AM	DMH
4,6-Dinitro-2-methylphenol	NELAP	0.040		ND	mg/L	2	8/4/2009 10:55:00 AM	DMH
4-Bromophenyl phenyl ether	NELAP	0.020		ND	mg/L	2	8/4/2009 10:55:00 AM	DMH
4-Chloro-3-methylphenol	NELAP	0.040		ND	mg/L	2	8/4/2009 10:55:00 AM	DMH
4-Chlorophenyl phenyl ether	NELAP	0.020		ND	mg/L	2	8/4/2009 10:55:00 AM	DMH
4-Nitrophenol	NELAP	0.040		ND	mg/L	2	8/4/2009 10:55:00 AM	DMH
Acenaphthene	NELAP	0.020		ND	mg/L	2	8/4/2009 10:55:00 AM	DMH
Acenaphthylene	NELAP	0.020		ND	mg/L	2	8/4/2009 10:55:00 AM	DMH
Anthracene	NELAP	0.020		ND	mg/L	2	8/4/2009 10:55:00 AM	DMH
Benzidine	NELAP	0.080		ND	mg/L	2	8/4/2009 10:55:00 AM	DMH
Benzo(a)anthracene	NELAP	0.020		ND	mg/L	2	8/4/2009 10:55:00 AM	DMH
Benzo(a)pyrene	NELAP	0.020		ND	mg/L	2	8/4/2009 10:55:00 AM	DMH
Benzo(b)fluoranthene	NELAP	0.020		ND	mg/L	2	8/4/2009 10:55:00 AM	DMH
Benzo(g,h,i)perylene	NELAP	0.020		ND	mg/L	2	8/4/2009 10:55:00 AM	DMH
Benzo(k)fluoranthene	NELAP	0.020		ND	mg/L	2	8/4/2009 10:55:00 AM	DMH
Bis(2-chloroethoxy)methane	NELAP	0.020		ND	mg/L	2	8/4/2009 10:55:00 AM	DMH
Bis(2-chloroethyl)ether	NELAP	0.020		ND	mg/L	2	8/4/2009 10:55:00 AM	DMH
Bis(2-chloroisopropyl)ether	NELAP	0.020		ND	mg/L	2	8/4/2009 10:55:00 AM	DMH
Bis(2-ethylhexyl)phthalate	NELAP	0.012		ND	mg/L	2	8/4/2009 10:55:00 AM	DMH
Butyl benzyl phthalate	NELAP	0.020		ND	mg/L	2	8/4/2009 10:55:00 AM	DMH
Chrysene	NELAP	0.020		ND	mg/L	2	8/4/2009 10:55:00 AM	DMH
Dibenzo(a,h)anthracene	NELAP	0.020		ND	mg/L	2	8/4/2009 10:55:00 AM	DMH
Diethyl phthalate	NELAP	0.020		ND	mg/L	2	8/4/2009 10:55:00 AM	DMH

RECEIVED
AUG 25 2009
DIVISION OF
ENVIRONMENTAL COMPLIANCE

TEKLAB, INC.

5445 HORSESHOE LAKE ROAD
COLLINSVILLE, ILLINOIS 62234

ENVIRONMENTAL TESTING LABORATORY

TEL: 618-344-1004
FAX: 618-344-1005

LABORATORY RESULTS

Client: Covidien/Mallinckrodt, Inc.
WorkOrder: 09080047
Lab ID: 09080047-001
Report Date: 21-Aug-09

Client Project: SP003 3rd Q 2009
Client Sample ID: SP-003 3rd Q2009
Collection Date: 8/3/2009 8:45:00 AM
Matrix: AQUEOUS

Analyses	Certification	RL	Qual	Result	Units	DF	Date Analyzed	Analyst
EPA 600 625, SEMI-VOLATILE ORGANIC COMPOUNDS BY GC/MS								
Dimethyl phthalate	NELAP	0.020		ND	mg/L	2	8/4/2009 10:55:00 AM	DMH
Di-n-butyl phthalate	NELAP	0.020		ND	mg/L	2	8/4/2009 10:55:00 AM	DMH
Di-n-octyl phthalate	NELAP	0.020		ND	mg/L	2	8/4/2009 10:55:00 AM	DMH
Fluoranthene	NELAP	0.020		ND	mg/L	2	8/4/2009 10:55:00 AM	DMH
Fluorene	NELAP	0.020		ND	mg/L	2	8/4/2009 10:55:00 AM	DMH
Hexachlorobenzene	NELAP	0.020		ND	mg/L	2	8/4/2009 10:55:00 AM	DMH
Hexachlorobutadiene	NELAP	0.020		ND	mg/L	2	8/4/2009 10:55:00 AM	DMH
Hexachlorocyclopentadiene	NELAP	0.040		ND	mg/L	2	8/4/2009 10:55:00 AM	DMH
Hexachloroethane	NELAP	0.020		ND	mg/L	2	8/4/2009 10:55:00 AM	DMH
Indeno(1,2,3-cd)pyrene	NELAP	0.020		ND	mg/L	2	8/4/2009 10:55:00 AM	DMH
Isophorone	NELAP	0.020		ND	mg/L	2	8/4/2009 10:55:00 AM	DMH
Naphthalene	NELAP	0.020		ND	mg/L	2	8/4/2009 10:55:00 AM	DMH
Nitrobenzene	NELAP	0.020		ND	mg/L	2	8/4/2009 10:55:00 AM	DMH
N-Nitrosodimethylamine	NELAP	0.040		ND	mg/L	2	8/4/2009 10:55:00 AM	DMH
N-Nitroso-di-n-propylamine	NELAP	0.020		ND	mg/L	2	8/4/2009 10:55:00 AM	DMH
N-Nitrosodiphenylamine	NELAP	0.020		ND	mg/L	2	8/4/2009 10:55:00 AM	DMH
Pentachlorophenol	NELAP	0.040		ND	mg/L	2	8/4/2009 10:55:00 AM	DMH
Phenanthrene	NELAP	0.020		ND	mg/L	2	8/4/2009 10:55:00 AM	DMH
Phenol	NELAP	0.010		ND	mg/L	2	8/4/2009 10:55:00 AM	DMH
Pyrene	NELAP	0.020		ND	mg/L	2	8/4/2009 10:55:00 AM	DMH
Surr: 2,4,6-Tribromophenol		27.7-149		86.9	%REC	2	8/4/2009 10:55:00 AM	DMH
Surr: 2-Fluorobiphenyl		44.9-116		92.5	%REC	2	8/4/2009 10:55:00 AM	DMH
Surr: 2-Fluorophenol		10.6-78.7		37.4	%REC	2	8/4/2009 10:55:00 AM	DMH
Surr: Nitrobenzene-d5		41.4-104		79.8	%REC	2	8/4/2009 10:55:00 AM	DMH
Surr: Phenol-d5		9.04-52.9		25.4	%REC	2	8/4/2009 10:55:00 AM	DMH
Surr: p-Terphenyl-d14		23.5-114		87.4	%REC	2	8/4/2009 10:55:00 AM	DMH
STANDARD METHOD 18TH ED. 4500-H B, LABORATORY ANALYZED								
Lab pH	NELAP	1.00		7.92		1	8/3/2009 10:46:00 PM	LMK
STANDARD METHODS 18TH ED. 2540 D								
Total Suspended Solids	NELAP	6		26	mg/L	1	8/3/2009 7:00:00 PM	MAB
STANDARD METHODS 18TH ED. 5210 B								
Biochemical Oxygen Demand	NELAP	5		18	mg/L	1	8/3/2009 5:00:00 PM	JMT
SW-846 8280A, POLYCHLORINATED DIBENZO-P-DIOXINS BY GC/MS								
2,3,7,8-Tetrachlorodibenzo-p-dioxin		10.0		ND	ng/L	1	8/14/2009 11:23:00 PM	SUB

Sample Narrative
EPA 100.2 Asbestos in Water
Analysis performed by EMSL Analytical, Inc.
SW-846 8280A, Polychlorinated Dibenzo-p-Dioxins by GC/MS

RECEIVED
AUG 25 2009
DIVISION OF
ENVIRONMENTAL COMPLIANCE

IL ELAP and NELAP Accredited - Accreditation #100226

MSD 012165

TEKLAB, INC.

5445 HORSESHOE LAKE ROAD
COLLINSVILLE, ILLINOIS 62234

ENVIRONMENTAL TESTING LABORATORY

TEL: 618-344-1004
FAX: 618-344-1005

LABORATORY RESULTS

Client: Covidien/Mallinckrodt, Inc.
WorkOrder: 09080047
Lab ID: 09080047-001
Report Date: 21-Aug-09

Client Project: SP003 3rd Q 2009
Client Sample ID: SP-003 3rd Q2009
Collection Date: 8/3/2009 8:45:00 AM
Matrix: AQUEOUS

Analyses	Certification	RL	Qual	Result	Units	DF	Date Analyzed	Analyst

Analysis performed by Pace Analytical Services, Inc.

EPA 600 608, Chlorinated Pesticides & PCBs by GC/ECD

Marginal Exceedance, LCS is verified per NELAC Appendix D 1.1.2

EPA 600 625, Semi-Volatile Organic Compounds by GC/MS

Elevated reporting limit due to high levels of target and/or non-target analytes.

Continuing Calibration Verification outside upper QC limits. Sample results are below reporting limit - data is reportable.

RECEIVED

AUG 25 2009

DIVISION OF
ENVIRONMENTAL COMPLIANCE

TEKLAB, INC.

5445 HORSESHOE LAKE ROAD
COLLINSVILLE, ILLINOIS 62234

ENVIRONMENTAL TESTING LABORATORY

TEL: 618-344-1004
FAX: 618-344-1005

RECEIVING CHECK LIST

Client: Covidien/Mallinckrodt, Inc.
Project: SP003 3rd Q 2009
Lab Order: 09080047
Report Date: 21-Aug-09

Carrier: Terry Hattan

Received By: EC

Completed by: Erin Clarke
On: 03-Aug-09

Reviewed by: Heather A. White
On: 03-Aug-09

Pages to follow: Chain of custody 1 Extra pages included 0

Shipping container/cooler in good condition?	Yes ☑	No ☐	Not Present ☐	Temp °C 6.0
Type of thermal preservation?	None ☐	Ice ☑	Blue Ice ☐	Dry Ice ☐
Chain of custody present?	Yes ☑	No ☐		
Chain of custody signed when relinquished and received?	Yes ☑	No ☐		
Chain of custody agrees with sample labels?	Yes ☑	No ☐		
Samples in proper container/bottle?	Yes ☑	No ☐		
Sample containers intact?	Yes ☑	No ☐		
Sufficient sample volume for indicated test?	Yes ☑	No ☐		
All samples received within holding time?	Yes ☑	No ☐		
Reported field parameters measured:	Field ☐	Lab ☑	NA ☐	
Container/Temp Blank temperature in compliance?	Yes ☑	No ☐		
When thermal preservation is required, samples are compliant with a temperature between 0.1°C - 6.0°C, or when samples are received on ice the same day as collected.				
Water - VOA vials have zero headspace?	Yes ☐	No ☑	No VOA vials ☐	
Water - TOX containers have zero headspace?	Yes ☐	No ☐	No TOX containers ☑	
Water - pH acceptable upon receipt?	Yes ☑	No ☐		

Any No responses must be detailed below or on the COC.

A significant amount of headspace was present in two of four volatile vials. EDC 8/3/09

RECEIVED
AUG 25 2009
DIVISION OF
ENVIRONMENTAL COMPLIANCE

IL ELAP and NELAP Accredited - Accreditation #100226

EMSL Analytical, Inc.
2001 East 52nd St., Indianapolis, IN 46205
Phone: (317) 803-2997 Fax: (317) 803-3047 Email: indianapolislab@emsl.com

Attn: **Heather White**
Teklab Inc.
5445 Horseshoe Lake Road
Collinsville, IL 62234

Fax: (618) 344-1005 Phone: (618) 344-1004
Project: **09080047**

Customer ID: TEK50
Customer PO: 14640
Received: 08/04/09 9:50 AM
EMSL Order: 160912150

EMSL Proj:
Analysis Date: 8/11/2009

Determination of Asbestos Structures over 10um in Length in Waste Water Performed by the EPA 100.2 Method

Sample ID	Sample Prep Date	# Fibers Asbestos	# Fibers Non-Asbestos	Type(s) Of Asbestos	Analytical Sensitivity (MFL)	Confidence Limits	Concentration Of Asbestos Fibers (MFL)	Comments
09080047-001	8/11/09	1	0	Chrysotile	0.19	0.01-1.00	0.19	
160912150-0001								

Analyst(s)
Richard Harding (1)

Richard Harding, Laboratory Manager
or other approved signatory

RECEIVED
AUG 25 2009
DIVISION OF
ENVIRONMENTAL COMPLIANCE

Sample collection and containers provided by the client, acceptable bottle blank level is defined as <=0 01MFL>10um. ND=None Detected. This report may not be reproduced, except in full, without written permission by EMSL Analytical, Inc. The test results contained within this report meet the requirements of NELAC unless otherwise noted. This report relates only to the samples reported above. Samples received in good condition unless otherwise noted.
Samples analyzed by EMSL Analytical, Inc. Indianapolis 2001 East 52nd St., Indianapolis IN

Test Report 100.2-V221-7.12.0 Printed: 8/11/2009 2:25:21 PM

THIS IS THE LAST PAGE OF THIS REPORT

CHAIN OF CUSTODY

pg. ____ of ____ Work Order # 0908004

TEKLAB, INC. 5445 Horseshoe Lake Road ~ Collinsville, IL 62234 ~ Phone: (618) 344-1004 ~ Fax: (618) 344-1005

Client: Covidien / Mallinckrodt
Address: 385 Marshall Ave.
City / State / Zip: Webster Groves, MO 63119
Contact: Shannon Brown Phone: 314-654-8010
E-Mail: Shannon.Brown@Covidien.com Fax: 314-654-2715

Samples on: ☒ Ice ☐ Blue Ice ☐ No Ice 6.0 °C
Preserved in: ☐ Lab ☒ Field EAH 8/3/09
Lab Notes: Headspace in two of four vials. EAH 8/3/09
Comments: Teklab, Inc. Courier Pick Up

- Are these samples known to be involved in litigation? If yes, a surcharge will apply. ☐ Yes ☐ No
- Are these samples known to be hazardous? ☐ Yes ☐ No
- Are there any required reporting limits to be met on the requested analysis? If yes, please provide limits in comment section. ☐ Yes ☐ No

Project Name / Number:
Sample Collector's Name:
Results Requested: ☐ Standard ☐ 1-2 Day (100% Surcharge) ☐ Other_____ ☐ 3 Day (50% Surcharge)
Billing Instructions:

Lab Use Only	Sample Identification	Date/Time Sampled	# and Type of Containers: UNPRES	HNO_3	NaOH	H_2SO_4	HCL	MeOH	$NaHSO_4$	Other	MATRIX: Water	Drinking Water	Soil	Sludge	Sp. Waste	INDICATE ANALYSIS REQUESTED: BOD	TSS	pH	Oil & Grease	COD	TTO	Mercury	Dioxin	Asbestos	Metals			
0908 0047	SP-003 3rd Q 2009	8-3-09 0845									X					X	X	X										
-001	SP-003 3rd Q 2009	8-3-09 0845									X								X									
	SP-003 3rd Q 2009	8-3-09 0845									X									X								
	SP-003 3rd Q 2009	8-3-09 0845									X										X	X	X	X	X			

Relinquished By	Date / Time	Received By	Date / Time
[signature]	8/3/09 1300	[signature]	8/3/09 1300
[signature]	8/3/09 1511	[signature]	8/3/09 1511

RECEIVED AUG 23 2009 DIVISION OF ENVIRONMENTAL COMPLIANCE

The individual signing this agreement on behalf of client acknowledges that he/she has read and understands the terms and conditions of this agreement, on the reverse side, and that he/she has the authority to sign on behalf of client.

WHITE & YELLOW – LAB PINK – SAMPLER'S COPY

MSD 0121169

DN

COVIDIEN

AUGUST 20, 2009

Mr. Doug Mendoza
Metropolitan St. Louis Sewer District
Department of Environmental Compliance
10 East Grand Avenue
St. Louis, MO 63147-2913

RE: Coal Test Burn Notification - PERMIT NO. 2112059600-2.1

Dear Mr. Mendoza:

Fifteen (15) tons of a test coal will be delivered to the St. Louis Plant on Monday, August 24, 2009. A test burn has been scheduled in the coal fired boiler to begin on this same day. The coal will be placed on the asphalted area just west of the boiler house. Any storm water runoff from this coal pile will drain to the plant's sewer system. A barrier will be placed around the sewer to minimize solids from this discharge. This notification is in accordance with Ordinance 12559 and Permit #2112059600-2.1.

If you have any questions or need additional information, please call me at 314.654.3374.

Sincerely,

Lisa Meyer
Senior HSE Engineer

RECEIVED
AUG 21 2009
DIVISION OF
ENVIRONMENTAL COMPLIANCE

COVIDIEN/MALLINCKRODT
3600 NORTH SECOND STREET
ST. LOUIS, MO 63147

TELEPHONE: 314-654-2000
FAX: 314-654-1251

COVIDIEN

RECEIVED

AUG 20 2009

DIVISION OF
ENVIRONMENTAL COMPLIANCE

In file

AUGUST 19, 2009

Mr. Steve Grace
Metropolitan St. Louis Sewer District
Department of Environmental Compliance
10 East Grand Avenue
St. Louis, MO 63147-2913

RE: Special Discharge Follow-ups - PERMIT NO. 2112059600-2.1

Dear Mr. Grace:

This letter is to update you on a recent Special Discharge permit discharges from the St. Louis Plant.

On July 22, 2009 an approval was received from MSD to discharge 880 gallons of an unusable batch of Ioversol/water solution from Building 505. This solution was discharged to MSD on August 18, 2009.

If you have any questions or need additional information, please call me at 314.654.3374.

Sincerely,

Lisa Meyer

Lisa Meyer
Senior HSE Engineer

COVIDIEN/MALLINCKRODT
3600 NORTH SECOND STREET
ST. LOUIS, MO 63147

TELEPHONE: 314-654-2000
FAX: 314-654-1251

✓Dr
✓JAG

COVIDIEN

AUGUST 13, 2009

Mr. George Pappas
Metropolitan St. Louis Sewer District
Department of Environmental Compliance
2350 Market Street
St. Louis, MO 63103-2555

RE: Request for Sewer Tie for New Hazardous Waste Storage Pad
Project: MSD P-0028720-00 Resubmittal
Industrial Wastewater Discharge Permit No. 2112059600-2.1

Dear Mr. Pappas:

In response to your initial review of the Plan Review Information Sheet for a combined sewer tie in connection from our new hazardous waste storage pad project, the additional information you requested is being submitted.

- The Agreement to Dedicate & Use
- Commercial/Industrial User Wastewater Survey
- Two sets of updated drawings

To comment on notes provided on drawings PLT5-210-003 and PLT5-210-004:
MSD project number, base map number and facility address has been added to each of the drawings

Destrehan Street is a public street.

The new hazardous waste storage pad does not have any sanitary sewer component. Therefore, no sanitary lateral is shown from the new building.

Runoff from the existing gravel area drains to Destrehan Street and will not be modified as a result of this project. No storm water runoff issues have ever been apparent from this area and therefore, we do not believe that the construction of an additional storm water drainage inlet is necessary.

Mallinckrodt, Inc. 2112059600

RECEIVED
AUG 18 2009
DIVISION OF ENVIRONMENTAL COMPLIANCE

COVIDIEN/MALLINCKRODT
3600 NORTH SECOND STREET
ST. LOUIS, MO 63147

TELEPHONE: 314-654-2000
FAX: 314-654-1251

COVIDIEN

As was previously stated we currently have an Industrial Wastewater Discharge permit for this site as issued by Mr. Scott M. Rehmer and Mr. Douglas M. Mendoza, P.E in the Department of Environmental Compliance at MSD. The permit number is 2112059600-2.1 which has an effective date of July 1, 2008 and an expiration date of May 31, 2010. The facility also has an Industrial User Questionnaire submission on file with the Department of Environmental Compliance.

If you have any questions or need additional information, please call me at 314.654.3374.

Sincerely,

Lisa Meyer
Senior HSE Engineer

CC: MR. DOUG MENDOZA, MGR. OF INDUSTRIAL PRETREATMENT, MSD
(COVER LETTER ONLY)

ENCLOSURES

RECEIVED
AUG 18 2009
DIVISION OF
ENVIRONMENTAL COMPLIANCE

COVIDIEN/MALLINCKRODT
3600 NORTH SECOND STREET
ST. LOUIS, MO 63147

TELEPHONE: 314-654-2000
FAX: 314-654-1251

Von
SR
8-10

COVIDIEN

Mallinckrodt

AUGUST 8, 2009

Mr. Doug Mendoza
Metropolitan St. Louis Sewer District
Department of Environmental Compliance
10 East Grand Avenue
St. Louis, MO 63147-2913

RE: Electrical outage - PERMIT NO. 2112059600-2.1

Dear Mr. Mendoza:

A plant-wide electrical outage for periodic maintenance has been scheduled for Saturday September 19 and Sunday September 20, 2009. As a result of the outage, the two lift stations at Sample Points 008 and 011 will lose power, causing the plant's wastewater to overflow through these sample points rather than to the plant-wide pH neutralization tanks and through our main outfall 010. Per our Permit conditions, a sample will be taken at the two sample points after overflow discharge commences, in addition to hourly pH readings. There will be no processes in operation as a result of the power outage, and therefore a reduced flow is expected. This notification is in accordance with Ordinance 12559 and Permit #2112059600-2.1.

If you have any questions or need additional information, please call me at 314.654.3374.

Sincerely,

Lisa Meyer

Lisa Meyer
Senior HSE Engineer

RECEIVED
AUG 10 2009
DIVISION OF
ENVIRONMENTAL COMPLIANCE

COVIDIEN/MALLINCKRODT
3600 NORTH SECOND STREET
ST. LOUIS, MO 63147

TELEPHONE: 314-654-2000
FAX: 314-654-1251

COVIDIEN

JULY 17, 2009

Mr. Steve Grace
Metropolitan St. Louis Sewer District
Department of Environmental Compliance
10 East Grand Avenue
St. Louis, MO 63147-2913

RE: Special Discharge Follow-ups - PERMIT NO. 2112059600-2.1

Dear Mr. Grace:

This letter is to update you on three recent Special Discharge permit discharges from the St. Louis Plant.

On March 31, 2009 an approval from MSD was received to discharge 400 gallons of a magnesium sulfate and water solution from Building X. This solution was discharged to MSD on March 31, 2009.

On May 14, 2009 an approval from MSD was received to discharge 4600 gallons of condensate wastewater containing 1% DMAC from Building 504. This solution was discharged to MSD on May 14, 2009.

On July 6, 2009 a verbal approval was received from MSD to discharge 635 gallons of a buffer reduced diamide solution from Building 507. This solution was discharged to MSD on July 6, 2009.

If you have any questions or need additional information, please call me at 314.654.3374.

RECEIVED
JUL 17 2009
DIVISION OF
ENVIRONMENTAL COMPLIANCE

Sincerely,

Lisa Meyer
Senior HSE Engineer

COVIDIEN/MALLINCKRODT
3600 NORTH SECOND STREET
ST. LOUIS, MO 63147

TELEPHONE: 314-654-2000
FAX: 314-654-1251

TO: Toni McGarry, Finance Department

FROM: Steven M. Grace, DEC SMG

DATE: July 27, 2009

RE: **Wastewater User Charge Billing for Special Discharge**

Please bill, by invoice, the following charges applicable to an on-site special discharge approved in our letter dated October 30, 1998, as modified in letters dated November 20, 1998, July 19, 1999, March 28, 2001, October 13, 2004, June 19, 2006, and May 22, 2008. The discharge dates and quantity are from information submitted by Sharon Cotner, Corps of Engineers, in a letter dated July 22, 2009.

This charge is based on the rates in MSD Wastewater User Charge Ordinance 12561.

PARTY TO BILL: Kerry Wallace
The Shaw Group Inc.
1 Angelrodt Street
St. Louis, MO 63147

BILLING IS FOR: On-Site Special Discharge

DISCHARGE PERIOD: April through June 2009

SOURCE OF WASTE: Treated construction water from the St. Louis Downtown FUSRAP Site located at Mallinckrodt, Inc., 3600 N. Second Street, St. Louis, Missouri.

Discharge Period	Billing Item	Quantity	Units	Rate	Charge
4/11/09 - 6/16/09	Volume	211	CcF	$1.88	$396.68
Totals:	---	211	CcF	---	$396.68

If you have any questions, please call me on extension 8755.

bv

pc: Roland Biehl

File: IU, MALLINCKRODT INC [2112059600]

DEPARTMENT OF THE ARMY
ST. LOUIS DISTRICT, CORPS OF ENGINEERS
8945 LATTY AVENUE
BERKELEY, MISSOURI 63134

July 22, 2009

Formerly Utilized Sites Remedial Action Program

SUBJECT: Quarterly Metropolitan Sewer District (MSD) Self-Monitoring Report for April through June 2009, FUSRAP St. Louis Sites

Mr. Steve Grace
St. Louis Metropolitan Sewer District
Department of Environmental Compliance
10 East Grand Avenue
St. Louis, Missouri 63147-2913

Dear Mr. Grace:

The U.S. Army Corps of Engineers (USACE) is submitting the April through June 2009 quarterly self-monitoring report for the St. Louis Sites. During this quarter, 13 batches of wastewater from North St. Louis County Sites were discharged to the MSD. Batches 117 and 119 occurred late in the first quarter of CY 2009 and are included in this report. For the batches reported in this quarter, 770,173 gallons of wastewater were discharged with a total activity of 1.8E-05 curies of total thorium; 8.8E-05 curies of total uranium and 3.6E-06 curies of total radium. Seven batches (Batch 119, Batch 122, Batch 123, Batch 127, Batch 128, Batch 131 and Batch 132) were from the SLAPS Vicinity Properties. Eight batches (Batch 117, Batch 120, Batch 121, Batch 124, Batch 125, Batch 126, Batch 129 and Batch 130) were from the Latty Avenue Vicinity Properties. The selenium variance calculation was used for Batch 126, Batch 129 and Batch 130. Data for each discharge is presented on the attached pages.

Batch 124 was discharged to MSD manhole 10K1-070S on April 15, 2009 (40,172 gallons) and April 16, 2009 (40,171 gallons). Analytical data received after these discharges had occurred indicate that selenium levels in the water were higher than anticipated. The total mass of selenium in the water for each discharge was 123 grams, which exceeds the project daily limit of 76 grams. Upon receipt of preliminary data, Shaw notified the USACE of the potential selenium exceedance for Batch 124 at HISS/Futura. After the data was validated, the USACE notified MSD of the exceedance on May 5, 2009. Batches subsequent to this occurrence from HISS/Futura will be analyzed for selenium prior to discharge to ensure that the batch is below a daily total mass of 76 grams or 0.900 mg/L concentration. This process will continue until no longer necessary.

During this quarter, five batches of wastewater from the St. Louis Downtown Site (SLDS) were discharged to MSD. Batch 455 occurred late in the second quarter of CY 2009 and will be included in the third quarter report. Batch 450 occurred late in the first quarter in CY 2009 and is included in this report. For the batches reported in this quarter, 157,959 gallons of wastewater were discharged with a total activity of 1.4E-06 curies of total thorium; 3.1E-05 curies of total uranium and 6.8E-07 curies of total radium. All five batches were from Plant 6 West Half (6WH). Data for each discharge is presented on the attached pages.

Should you have any comments or questions regarding this letter, please feel free to contact Mr. Ron Frerker at (314) 260-3936.

Sincerely,

Sharon R. Cotner
FUSRAP Program Manager

Enclosures

FUSRAP North St. Louis County Sites
Self Monitoring Report for 2nd Quarter 2009

Parameter	Batch Number	Date of Discharge	Batch Results		Amount Discharged (Gallons)	Total Activity per Discharge (Ci)	MSD Limits	10CFR20 Limits	10CFR20 Sum of the Ratios
Gross Alpha (raw water)	SLAPS-117[6]	03/25/09	10	pCi/L	4,607	1.8E-07	3000 pCi/L	3000 pCi/L	
Gross Beta		(40A Tract 3 Latty VP)	<11	pCi/L		9.7E-08	N/A pCi/L	N/A pCi/L	
TH-228			<0.4	pCi/L		3.5E-09	2000 pCi/L	2000 pCi/L	
TH-230			1	pCi/L		1.9E-08	1000 pCi/L	1000 pCi/L	
Uranium (KPA)			13	pCi/L		2.3E-07	3000 pCi/L	3000 pCi/L	
RA-226			1	pCi/L		2.4E-08	10 pCi/L	600 pCi/L	
RA-228[2]			<0.4	pCi/L		3.5E-09	30 pCi/L	600 pCi/L	0.01
Barium			0.09	mg/L			10 mg/L		
Lead			<0.001	mg/L			0.40 mg/L		
Selenium[5]			0.01	mg/L			0.20 mg/L[5]		
BOD[3]				mg/L					
COD[3]				mg/L					
Gross Alpha (TSS filtrate)			<9	pCi/L					
Total Suspended Solids			15	mg/L					
Gross Alpha (raw water)	SLAPS-119[6,7,8]	03/31/09 - 04/01/09	<8	pCi/L	90,850	1.4E-06	3000 pCi/L	3000 pCi/L	
Gross Beta		(IA13 SLAPS VP)	<11	pCi/L		1.9E-06	N/A pCi/L	N/A pCi/L	
TH-228			<0.5	pCi/L		8.8E-08	2000 pCi/L	2000 pCi/L	
TH-230			0.7	pCi/L		2.5E-07	1000 pCi/L	1000 pCi/L	
Uranium (KPA)			7	pCi/L		2.4E-06	3000 pCi/L	3000 pCi/L	
RA-226			0.6	pCi/L		2.1E-07	10 pCi/L	600 pCi/L	
RA-228[2]			<0.5	pCi/L		8.8E-08	30 pCi/L	600 pCi/L	0.00
Barium			0.04	mg/L			10 mg/L		
Lead			<0.010	mg/L			0.40 mg/L		
Selenium[5]			<0.010	mg/L			0.20 mg/L[5]		
BOD[3]				mg/L					
COD[3]				mg/L					
Gross Alpha (TSS filtrate)			<8	pCi/L					
Total Suspended Solids			5	mg/L					
Gross Alpha (raw water)	SLAPS-120	04/02/09	30	pCi/L	24,221	2.8E-06	3000 pCi/L	3000 pCi/L	
Gross Beta		(HISS/Futura Latty VP)	<12	pCi/L		5.6E-07	N/A pCi/L	N/A pCi/L	
TH-228			<0.5	pCi/L		2.2E-08	2000 pCi/L	2000 pCi/L	
TH-230			0.9	pCi/L		8.3E-08	1000 pCi/L	1000 pCi/L	
Uranium (KPA)			33	pCi/L		3.0E-06	3000 pCi/L	3000 pCi/L	
RA-226			1	pCi/L		9.2E-08	10 pCi/L	600 pCi/L	
RA-228[2]			<0.5	pCi/L		2.2E-08	30 pCi/L	600 pCi/L	0.01
Barium			0.06	mg/L			10 mg/L		
Lead			<0.010	mg/L			0.40 mg/L		
Selenium[5]			0.03	mg/L			0.20 mg/L[5]		
BOD[3]				mg/L					
COD[3]				mg/L					
Gross Alpha (TSS filtrate)			35	pCi/L					
Total Suspended Solids			6	mg/L					
Gross Alpha (raw water)	SLAPS-121[8]	04/06/09 - 04/08/09	30	pCi/L	92,196	1.1E-05	3000 pCi/L	3000 pCi/L	
Gross Beta		(HISS/Futura Latty VP)	<12	pCi/L		2.0E-06	N/A pCi/L	N/A pCi/L	
TH-228			<0.5	pCi/L		8.9E-08	2000 pCi/L	2000 pCi/L	
TH-230			0.7	pCi/L		2.3E-07	1000 pCi/L	1000 pCi/L	
Uranium (KPA)			33	pCi/L		1.2E-05	3000 pCi/L	3000 pCi/L	
RA-226			<0.7	pCi/L		1.2E-07	10 pCi/L	600 pCi/L	
RA-228[2]			<0.5	pCi/L		8.9E-08	30 pCi/L	600 pCi/L	0.01
Barium			0.07	mg/L			10 mg/L		
Lead			<0.010	mg/L			0.40 mg/L		
Selenium[5]			0.03	mg/L			0.20 mg/L[5]		
BOD[3]				mg/L					
COD[3]				mg/L					
Gross Alpha (TSS filtrate)			27	pCi/L					
Total Suspended Solids			5	mg/L					
Gross Alpha (raw water)	SLAPS-122	04/06/09	11	pCi/L	51,018	2.1E-06	3000 pCi/L	3000 pCi/L	
Gross Beta		(IA13 SLAPS VP)	<10	pCi/L		9.9E-07	N/A pCi/L	N/A pCi/L	
TH-228			<0.4	pCi/L		3.6E-08	2000 pCi/L	2000 pCi/L	
TH-230			1	pCi/L		2.5E-07	1000 pCi/L	1000 pCi/L	
Uranium (KPA)			7	pCi/L		1.3E-06	3000 pCi/L	3000 pCi/L	
RA-226			<0.5	pCi/L		5.2E-08	10 pCi/L	600 pCi/L	
RA-228[2]			<0.4	pCi/L		3.6E-08	30 pCi/L	600 pCi/L	0.00
Barium			0.04	mg/L			10 mg/L		
Lead			<0.010	mg/L			0.40 mg/L		
Selenium[5]			<0.010	mg/L			0.20 mg/L[5]		
BOD[3]				mg/L					
COD[3]				mg/L					
Gross Alpha (TSS filtrate)			<8	pCi/L					
Total Suspended Solids			2	mg/L					
Gross Alpha (raw water)	SLAPS-123	04/14/09	<9	pCi/L	77,007	1.2E-06	3000 pCi/L	3000 pCi/L	
Gross Beta		(IA13 SLAPS VP)	<13	pCi/L		1.9E-06	N/A pCi/L	N/A pCi/L	
TH-228			<0.5	pCi/L		7.8E-08	2000 pCi/L	2000 pCi/L	
TH-230			1	pCi/L		3.5E-07	1000 pCi/L	1000 pCi/L	
Uranium (KPA)			5	pCi/L		1.5E-06	3000 pCi/L	3000 pCi/L	
RA-226			<0.5	pCi/L		7.4E-08	10 pCi/L	600 pCi/L	
RA-228[2]			<0.5	pCi/L		7.8E-08	30 pCi/L	600 pCi/L	0.00
Barium			0.03	mg/L			10 mg/L		
Lead			<0.010	mg/L			0.40 mg/L		
Selenium[5]			<0.010	mg/L			0.20 mg/L[5]		
BOD[3]				mg/L					
COD[3]				mg/L					
Gross Alpha (TSS filtrate)			<9	pCi/L					
Total Suspended Solids			5	mg/L					

FUSRAP North St. Louis County Sites
Self Monitoring Report for 2nd Quarter 2009

Parameter	Batch Number	Date of Discharge	Batch Results		Amount Discharged (Gallons)	Total Activity per Discharge (Ci)	MSD Limits	10CFR20 Limits	10CFR20 Sum of the Ratios
Gross Alpha (raw water)	SLAPS-124[10]	04/15/09 - 04/16/09	123	pCi/L	80,343	3.7E-05	3000 pCi/L	3000 pCi/L	
Gross Beta		(HISS/Futura Latty VP)	21	pCi/L		6.4E-06	N/A pCi/L	N/A pCi/L	
TH-228			<0.5	pCi/L		8.1E-08	2000 pCi/L	2000 pCi/L	
TH-230			11	pCi/L		3.2E-06	1000 pCi/L	1000 pCi/L	
Uranium (KPA)			129	pCi/L		3.9E-05	3000 pCi/L	3000 pCi/L	
RA-226			3	pCi/L		7.7E-07	10 pCi/L	600 pCi/L	
RA-228[2]			<0.5	pCi/L		8.1E-08	30 pCi/L	600 pCi/L	0.06
Barium			0.07	mg/L			10 mg/L		
Lead			<0.010	mg/L			0.40 mg/L		
Selenium[5]			0.81 [12]	mg/L			0.20 mg/L[5]		
BOD[3]				mg/L					
COD[3]				mg/L					
Gross Alpha (TSS filtrate)			112	pCi/L					
Total Suspended Solids			8	mg/L					
Gross Alpha (raw water)	SLAPS-125	04/20/09	37	pCi/L	23,630	3.3E-06	3000 pCi/L	3000 pCi/L	
Gross Beta		(HISS/Futura Latty VP)	12	pCi/L		1.0E-06	N/A pCi/L	N/A pCi/L	
TH-228			0.4	pCi/L		3.3E-08	2000 pCi/L	2000 pCi/L	
TH-230			0.6	pCi/L		5.7E-08	1000 pCi/L	1000 pCi/L	
Uranium (KPA)			50	pCi/L		4.5E-06	3000 pCi/L	3000 pCi/L	
RA-226			0.5	pCi/L		4.8E-08	10 pCi/L	600 pCi/L	
RA-228[2]			0.4	pCi/L		3.3E-08	30 pCi/L	600 pCi/L	0.02
Barium			0.06	mg/L			10 mg/L		
Lead			<0.010	mg/L			0.40 mg/L		
Selenium[5]			0.08	mg/L			0.20 mg/L[5]		
BOD[3]				mg/L					
COD[3]				mg/L					
Gross Alpha (TSS filtrate)			42	pCi/L					
Total Suspended Solids			3	mg/L					
Gross Alpha (raw water)	SLAPS-126	04/21/09	145	pCi/L	7,701	4.2E-06	3000 pCi/L	3000 pCi/L	
Gross Beta		(HISS/Futura Latty VP)	34	pCi/L		9.8E-07	N/A pCi/L	N/A pCi/L	
TH-228			0.3	pCi/L		7.8E-09	2000 pCi/L	2000 pCi/L	
TH-230			5	pCi/L		1.4E-07	1000 pCi/L	1000 pCi/L	
Uranium (KPA)			164	pCi/L		4.8E-06	3000 pCi/L	3000 pCi/L	
RA-226			2	pCi/L		6.1E-08	10 pCi/L	600 pCi/L	
RA-228[2]			0.3	pCi/L		7.8E-09	30 pCi/L	600 pCi/L	0.06
Barium			0.07	mg/L			10 mg/L		
Lead			<0.010	mg/L			0.40 mg/L		
Selenium[5]			0.810	mg/L			0.20 mg/L[5]		
BOD[3]				mg/L					
COD[3]				mg/L					
Gross Alpha (TSS filtrate)			133	pCi/L					
Total Suspended Solids			20	mg/L					
Gross Alpha (raw water)	SLAPS-127	05/12/09	<7	pCi/L	28,223	3.7E-07	3000 pCi/L	3000 pCi/L	
Gross Beta		(IA13 SLAPS VP)	<12	pCi/L		6.4E-07	N/A pCi/L	N/A pCi/L	
TH-228			<0.3	pCi/L		1.5E-08	2000 pCi/L	2000 pCi/L	
TH-230			0.4	pCi/L		4.3E-08	1000 pCi/L	1000 pCi/L	
Uranium (KPA)			<1	pCi/L		5.9E-08	3000 pCi/L	3000 pCi/L	
RA-226			2	pCi/L		2.1E-07	10 pCi/L	600 pCi/L	
RA-228[2]			<0.3	pCi/L		1.5E-08	30 pCi/L	600 pCi/L	0.00
Barium			0.05	mg/L			10 mg/L		
Lead			<0.010	mg/L			0.40 mg/L		
Selenium[5]			<0.010	mg/L			0.20 mg/L[5]		
BOD[3]				mg/L					
COD[3]				mg/L					
Gross Alpha (TSS filtrate)			<7	pCi/L					
Total Suspended Solids			0.8	mg/L					
Gross Alpha (raw water)	SLAPS-128	05/18/09	<8	pCi/L	49,238	7.2E-07	3000 pCi/L	3000 pCi/L	
Gross Beta		(IA13 SLAPS VP)	<12	pCi/L		1.1E-06	N/A pCi/L	N/A pCi/L	
TH-228			<0.4	pCi/L		3.9E-08	2000 pCi/L	2000 pCi/L	
TH-230			<0.5	pCi/L		4.8E-08	1000 pCi/L	1000 pCi/L	
Uranium (KPA)			1	pCi/L		1.9E-07	3000 pCi/L	3000 pCi/L	
RA-226			<0.8	pCi/L		7.5E-08	10 pCi/L	600 pCi/L	
RA-228[2]			<0.4	pCi/L		3.9E-08	30 pCi/L	600 pCi/L	0.00
Barium			0.04	mg/L			10 mg/L		
Lead			<0.010	mg/L			0.40 mg/L		
Selenium[5]			<0.010	mg/L			0.20 mg/L[5]		
BOD[3]				mg/L					
COD[3]				mg/L					
Gross Alpha (TSS filtrate)			<8	pCi/L					
Total Suspended Solids			2	mg/L					

FUSRAP North St. Louis County Sites
Self Monitoring Report for 2nd Quarter 2009

Parameter	Batch Number	Date of Discharge	Batch Results		Amount Discharged (Gallons)	Total Activity per Discharge (Ci)	MSD Limits	10CFR20 Limits	10CFR20 Sum of the Ratios
Gross Alpha (raw water)	SLAPS-129	06/03/09 - 06/09/09	61	pCi/L	101,610	2.3E-05	3000 pCi/L	3000 pCi/L	
Gross Beta		(HISS/Futura Latty VP)	23	pCi/L		8.7E-06	N/A pCi/L	N/A pCi/L	
TH-228			<0.5	pCi/L		1.0E-07	2000 pCi/L	2000 pCi/L	
TH-230			30	pCi/L		1.2E-05	1000 pCi/L	1000 pCi/L	
Uranium (KPA)			47	pCi/L		1.8E-05	3000 pCi/L	3000 pCi/L	
RA-226			2	pCi/L		6.7E-07	10 pCi/L	600 pCi/L	
RA-228[2]			<0.5	pCi/L		1.0E-07	30 pCi/L	600 pCi/L	0.05
Barium			0.15	mg/L			10 mg/L		
Lead			<0.010	mg/L			0.40 mg/L		
Selenium[5]			0.42	mg/L			0.20 mg/L[5]		
BOD[3]				mg/L					
COD[3]				mg/L					
Gross Alpha (TSS filtrate)			41	pCi/L					
Total Suspended Solids			137	mg/L					
Gross Alpha (raw water)	SLAPS-130	06/08/09	23	pCi/L	5,090	4.4E-07	3000 pCi/L	3000 pCi/L	
Gross Beta		(HISS/Futura Latty VP)	<11	pCi/L		1.1E-07	N/A pCi/L	N/A pCi/L	
TH-228			<0.4	pCi/L		4.3E-09	2000 pCi/L	2000 pCi/L	
TH-230			2	pCi/L		3.9E-08	1000 pCi/L	1000 pCi/L	
Uranium (KPA)			13	pCi/L		2.5E-07	3000 pCi/L	3000 pCi/L	
RA-226			1	pCi/L		1.8E-08	10 pCi/L	600 pCi/L	
RA-228[2]			<0.4	pCi/L		4.3E-09	30 pCi/L	600 pCi/L	0.01
Barium			0.08	mg/L			10 mg/L		
Lead			<0.010	mg/L			0.40 mg/L		
Selenium[5]			0.64	mg/L			0.20 mg/L[5]		
BOD[3]				mg/L					
COD[3]				mg/L					
Gross Alpha (TSS filtrate)			16	pCi/L					
Total Suspended Solids			2	mg/L					
Gross Alpha (raw water)	SLAPS-131[11]	06/16/09 - 06/17/09	<8	pCi/L	71,079	1.1E-06	3000 pCi/L	3000 pCi/L	
Gross Beta		(IA13 SLAPS VP)	<12	pCi/L		1.6E-06	N/A pCi/L	N/A pCi/L	
TH-228			<0.5	pCi/L		6.6E-08	2000 pCi/L	2000 pCi/L	
TH-230			1	pCi/L		3.7E-07	1000 pCi/L	1000 pCi/L	
Uranium (KPA)			1	pCi/L		2.7E-07	3000 pCi/L	3000 pCi/L	
RA-226			<0.9	pCi/L		1.2E-07	10 pCi/L	600 pCi/L	
RA-228[2]			<0.5	pCi/L		6.6E-08	30 pCi/L	600 pCi/L	0.00
Barium			0.09	mg/L			10 mg/L		
Lead			0.01	mg/L			0.40 mg/L		
Selenium[5]			<0.010	mg/L			0.20 mg/L[5]		
BOD[3]				mg/L					
COD[3]				mg/L					
Gross Alpha (TSS filtrate)			<8	pCi/L					
Total Suspended Solids			10	mg/L					
Gross Alpha (raw water)	SLAPS-132	06/22/09	<7	pCi/L	63,360	8.7E-07	3000 pCi/L	3000 pCi/L	
Gross Beta		(IA13 SLAPS VP)	<12	pCi/L		1.4E-06	N/A pCi/L	N/A pCi/L	
TH-228			<0.5	pCi/L		6.2E-08	2000 pCi/L	2000 pCi/L	
TH-230			2	pCi/L		4.1E-07	1000 pCi/L	1000 pCi/L	
Uranium (KPA)			3	pCi/L		6.6E-07	3000 pCi/L	3000 pCi/L	
RA-226			1	pCi/L		3.1E-07	10 pCi/L	600 pCi/L	
RA-228[2]			<0.5	pCi/L		6.2E-08	30 pCi/L	600 pCi/L	0.01
Barium			0.08	mg/L			10 mg/L		
Lead			<0.010	mg/L			0.40 mg/L		
Selenium[5]			<0.010	mg/L			0.20 mg/L[5]		
BOD[3]				mg/L					
COD[3]				mg/L					
Gross Alpha (TSS filtrate)			<7	pCi/L					
Total Suspended Solids			19	mg/L					

[1] Non detect sample results are converted to half the detection limit.
[2] Ra-228 assumed to be in equilibrium with Th-228
[3] MSD surcharges apply for BOD concentration > 300 mg/L and COD concentration > 600 mg/L.
[4] The weighted average was used to calculate the total activity.
[5] The limit for selenium can be a daily total mass of 76 grams, or a concentration of 0.90 mg/L. See Attachment 1 for selenium variance calculation.
[6] Batch 117 and Batch 119 occurred late in the First Quarter and were not included in the First Quarter Report.
[7] Batch 118 was included in the First Quarter Report.
[8] See Attachment 2 - Batch 119 Continuous Discharge Table
[9] See Attachment 3 - Batch 121 Continuous Discharge Table
[10] See Attachment 4 - Batch 124 Continuous Discharge Table
[11] See Attachment 5 - Batch 131 Continuous Discharge Table
[12] On May 5, 2009, MSD (Steve Grace) was notified of the selenium exceedance for Batch 124.
NA - Not applicable

Total Activity Discharged in 2nd Quarter of CY09 (Ci)

TH-228	7.3E-07
TH-230	1.7E-05
Uranium (KPA)	8.8E-05
RA-226	2.8E-06
RA-228[2]	7.3E-07

Total Activity Discharged through 06/30/09 (Ci)

TH-228	1.1E-06
TH-230	3.9E-05
Uranium (KPA)	1.5E-04
RA-226	4.4E-06
RA-228[2]	1.1E-06

Total Volume for 2nd Quarter of CY09 (gal)

Gallons	770,173

Volume Discharged through 06/30/09 (gal)

Gallons	1,117,918

Attachment 1 Q209

Selenium Variance Calculation

SLAPS-117	03/25/09	0.011	4,607	0
SLAPS-119	03/31/09	0.010	47,350	2
	04/01/09	0.010	43,500	2
SLAPS-120	04/02/09	0.029	24,221	3
SLAPS-121	04/06/09	0.029	31,900	4
	04/07/09	0.029	30,719	3
	04/08/09	0.029	29,577	3
SLAPS-122	04/06/09	0.010	51,018	2
SLAPS-123	04/14/09	0.010	77,007	3
SLAPS-124	04/15/09	0.810	40,172	123
	04/16/09	0.810	40,171	123
SLAPS-125	04/20/09	0.062	23,630	6
SLAPS-126	04/21/09	0.810	7,701	24
SLAPS-127	05/12/09	0.010	28,223	1
SLAPS-128	05/18/09	0.010	49,238	2
SLAPS-129	06/03/09	0.420	33,082	53
	06/04/09	0.420	41,353	66
	06/08/09	0.420	16,541	26
	06/09/09	0.420	10,634	17
SLAPS-130	06/08/09	0.640	5,090	12
SLAPS-131	06/16/09	0.010	9,412	0
	06/17/09	0.010	61,667	2
SLAPS-132	06/22/09	0.010	63,360	2

Conversions:
1 Liter = 0.264172 Gallons
1 ug = 0.000001 g
1 mg = 0.001 g

Attachment 2
FUSRAP North St. Louis County Sites
Batch 119 Continuous Discharge Table 03/31/09 - 04/01/09

Date:	03/31/09	04/01/09	Total	**Result**
Volume Discharged:	47,350	43,500	90,850	
Sample ID:	SVP109848	SVP109849		
NCVP				
Gross Alpha, raw water (HISS, pCi/L):	2	4		3
Gross Beta, raw water (HISS, pCi/L):	5	0		2
Total Uranium, KPA (filtered, HISS, pCi/L):	7	7		7
Isotopics (HISS, pCi/l):				
Th-228	0.15	0.10		0.13
Th-230	0.67	0.76		0.72
Ra-226	0.44	0.74		0.58
Ra-228[2]	0.15	0.10		0.13
Barium (mg/L):	0.044			0.04
Lead (mg/L):	0.010			0.010
Selenium (mg/L):	0.010			0.010
BOD	NA			NA
COD	NA			NA
Gross Alpha, TSS filtrate (HISS, pCi/L):	4	5		5
Total Suspended Solids (mg/L):	5	4		5

[1] = The chemical results were used for final discharge

[2] = Ra-228 assumed to be in equilibrium with Th-228

[3] = Used highest MDA for calculation

Attachment 3
FUSRAP North St. Louis County Sites
Batch 121 Continuous Discharge Table 04/06/09 - 04/08/09

Date:	04/06/09	04/07/09	04/08/09	Total	**Result**
Volume Discharged:	31,900	30,719	29,577	92,196	
Sample ID:	SVP109851	SVP109853	SVP109854		
NCVP					
Gross Alpha, raw water (HISS, pCi/L):	29	28	35		30
Gross Beta, raw water (HISS, pCi/L):	14	9	5		9
Total Uranium, KPA (filtered, HISS, pCi/L):	32	35	32		33
Isotopics (HISS, pCi/l):					
Th-228	0.28	0.00	0.07		0.12
Th-230	0.86	0.55	0.59		0.67
Ra-226	0.38	0.46	0.50		0.45
Ra-228[2]	0.28	0.00	0.07		0.12
Barium (mg/L):	0.069				0.07
Lead (mg/L):	0.010				0.010
Selenium (mg/L):	0.029				0.03
BOD	NA				NA
COD	NA				NA
Gross Alpha, TSS filtrate (HISS, pCi/L):	22	30	30		27
Total Suspended Solids (mg/L):	6	6	3		5

[1] = The chemical results were used for final discharge
[2] = Ra-228 assumed to be in equilibrium with Th-228
[3] = Used highest MDA for calculation

Attachment 4
FUSRAP North St. Louis County Sites
Batch 124 Continuous Discharge Table 04/15/09 - 04/16/09

Date:	04/15/09	04/16/09	Total	**Result**
Volume Discharged:	40,172	40,171	80,343	
Sample ID:	SVP109856	SVP109857		
NCVP				
Gross Alpha, raw water (HISS, pCi/L):	194	52		123
Gross Beta, raw water (HISS, pCi/L):	33	9		21
Total Uranium, KPA (filtered, HISS, pCi/L):	204	54		129
Isotopics (HISS, pCi/l):				
Th-228	0.13	0.15		0.14
Th-230	19.25	1.78		10.52
Ra-226	3.03	2.06		2.54
Ra-228[2]	0.13	0.15		0.14
Barium (mg/L):	0.073			0.07
Lead (mg/L):	0.010			0.010
Selenium (mg/L):	0.810			0.81
BOD	NA			NA
COD	NA			NA
Gross Alpha, TSS filtrate (HISS, pCi/L):	182	42		112
Total Suspended Solids (mg/L):	9	7		8

[1] = The chemical results were used for final discharge
[2] = Ra-228 assumed to be in equilibrium with Th-228
[3] = Used highest MDA for calculation

Attachment 5
FUSRAP North St. Louis County Sites
Batch 131 Continuous Discharge Table 06/16/09 - 06/17/09

Date:	06/16/09	06/17/09	Total	Result
Volume Discharged:	9,412	61,667	71,079	
Sample ID:	SVP109864	SVP109866		
NCVP				
Gross Alpha, raw water (HISS, pCi/L):	6	2		2
Gross Beta, raw water (HISS, pCi/L):	1	0		0
Total Uranium, KPA (filtered, HISS, pCi/L):	2	1		1
Isotopics (HISS, pCi/l):				
Th-228	0.21	0.44		0.41
Th-230	2.34	1.23		1.38
Ra-226	0.16	0.52		0.47
Ra-228[2]	0.21	0.44		0.41
Barium (mg/L):	0.091			0.09
Lead (mg/L):	0.014			0.01
Selenium (mg/L):	0.010			0.01
BOD	NA			NA
COD	NA			NA
Gross Alpha, TSS filtrate (HISS, pCi/L):	0	1		1
Total Suspended Solids (mg/L):	30	7		10

[1] = The chemical results were used for final discharge
[2] = Ra-228 assumed to be in equilibrium with Th-228
[3] = Used highest MDA for calculation

117	SVP109846TW	1,1,1-Trichloroethane	2/16/2009	5		ug/L	5	TA
117	SVP109846TW	1,1,2,2-Tetrachloroethane	2/16/2009	5		ug/L	5	TA
117	SVP109846TW	1,1,2-Trichloro-1,2,2-trifluoroethane	2/16/2009	5		ug/L	5	TA
117	SVP109846TW	1,1,2-Trichloroethane	2/16/2009	5		ug/L	5	TA
117	SVP109846TW	1,1-Dichloroethane	2/16/2009	5		ug/L	5	TA
117	SVP109846TW	1,1-Dichloroethene	2/16/2009	5		ug/L	5	TA
117	SVP109846TW	1,2,4-Trichlorobenzene	2/16/2009	10		ug/L	10	TA
117	SVP109846TW	1,2-Dichlorobenzene	2/16/2009	10		ug/L	10	TA
117	SVP109846TW	1,2-Dichloroethane	2/16/2009	5		ug/L	5	TA
117	SVP109846TW	1,2-Dichloroethene (Total)	2/16/2009	5		ug/L	5	TA
117	SVP109846TW	1,2-Dichloropropane	2/16/2009	5		ug/L	5	TA
117	SVP109846TW	1,3-Dichlorobenzene	2/16/2009	10		ug/L	10	TA
117	SVP109846TW	1,4-Dichlorobenzene	2/16/2009	10		ug/L	10	TA
117	SVP109846TW	2,2'-oxybis(1-Chloropropane)	2/16/2009	10		ug/L	10	TA
117	SVP109846TW	2,4,5-Trichlorophenol	2/16/2009	10		ug/L	10	TA
117	SVP109846TW	2,4,6-Trichlorophenol	2/16/2009	10		ug/L	10	TA
117	SVP109846TW	2,4-Dichlorophenol	2/16/2009	10		ug/L	10	TA
117	SVP109846TW	2,4-Dimethylphenol	2/16/2009	10		ug/L	10	TA
117	SVP109846TW	2,4-Dinitrophenol	2/16/2009	50		ug/L	50	TA
117	SVP109846TW	2,4-Dinitrotoluene	2/16/2009	10		ug/L	10	TA
117	SVP109846TW	2,6-Dinitrotoluene	2/16/2009	10		ug/L	10	TA
117	SVP109846TW	2-Butanone	2/16/2009	20		ug/L	20	TA
117	SVP109846TW	2-Chloronaphthalene	2/16/2009	10		ug/L	10	TA
117	SVP109846TW	2-Chlorophenol	2/16/2009	10		ug/L	10	TA
117	SVP109846TW	2-Hexanone	2/16/2009	20		ug/L	20	TA
117	SVP109846TW	2-Methylnaphthalene	2/16/2009	10		ug/L	10	TA
117	SVP109846TW	2-Methylphenol	2/16/2009	10		ug/L	10	TA
117	SVP109846TW	2-Nitroaniline	2/16/2009	10		ug/L	10	TA
117	SVP109846TW	2-Nitrophenol	2/16/2009	10		ug/L	10	TA
117	SVP109846TW	3,3'-Dichlorobenzidine	2/16/2009	50		ug/L	50	TA
117	SVP109846TW	3-Nitroaniline	2/16/2009	10		ug/L	10	TA
117	SVP109846TW	4,6-Dinitro-2-methylphenol	2/16/2009	50		ug/L	50	TA
117	SVP109846TW	4-Bromophenyl phenyl ether	2/16/2009	10		ug/L	10	TA
117	SVP109846TW	4-Chloro-3-methylphenol	2/16/2009	10		ug/L	10	TA
117	SVP109846TW	4-Chloroaniline	2/16/2009	10		ug/L	10	TA
117	SVP109846TW	4-Chlorophenyl phenyl ether	2/16/2009	10		ug/L	10	TA
117	SVP109846TW	4-Methyl-2-pentanone	2/16/2009	20		ug/L	20	TA
117	SVP109846TW	4-Nitroaniline	2/16/2009	10		ug/L	10	TA
117	SVP109846TW	4-Nitrophenol	2/16/2009	25		ug/L	25	TA
117	SVP109846TW	Acenaphthene	2/16/2009	10		ug/L	10	TA
117	SVP109846TW	Acenaphthylene	2/16/2009	10		ug/L	10	TA
117	SVP109846TW	Acetone	2/16/2009	20		ug/L	20	TA
117	SVP109846TW	Aluminum	2/16/2009	224		ug/L	79.9	TA
117	SVP109846TW	Anthracene	2/16/2009	10		ug/L	10	TA
117	SVP109846TW	Antimony	2/16/2009	4		ug/L	4	TA
117	SVP109846TW	Aroclor-1016	2/16/2009	1.1		ug/L	1.1	TA
117	SVP109846TW	Aroclor-1221	2/16/2009	1.1		ug/L	1.1	TA
117	SVP109846TW	Aroclor-1232	2/16/2009	1.1		ug/L	1.1	TA
117	SVP109846TW	Aroclor-1242	2/16/2009	1.1		ug/L	1.1	TA
117	SVP109846TW	Aroclor-1248	2/16/2009	1.1		ug/L	1.1	TA
117	SVP109846TW	Aroclor-1254	2/16/2009	1.1		ug/L	1.1	TA
117	SVP109846TW	Aroclor-1260	2/16/2009	1.1		ug/L	1.1	TA
117	SVP109846TW	Arsenic	2/16/2009	2		ug/L	2	TA
117	SVP109846TW	Barium	2/16/2009	92.6		ug/L	0.85	TA
117	SVP109846TW	Benzene	2/16/2009	5		ug/L	5	TA
117	SVP109846TW	Benzo(a)anthracene	2/16/2009	10		ug/L	10	TA
117	SVP109846TW	Benzo(a)pyrene	2/16/2009	10		ug/L	10	TA
117	SVP109846TW	Benzo(b)fluoranthene	2/16/2009	10		ug/L	10	TA
117	SVP109846TW	Benzo(g,h,i)perylene	2/16/2009	10		ug/L	10	TA
117	SVP109846TW	Benzo(k)fluoranthene	2/16/2009	10		ug/L	10	TA

117	SVP109846TW	Beryllium	2/16/2009	0.5		ug/L	0.5	TA
117	SVP109846TW	Bis(2-chloroethoxy) methane	2/16/2009	10		ug/L	10	TA
117	SVP109846TW	Bis(2-chloroethyl) ether	2/16/2009	10		ug/L	10	TA
117	SVP109846TW	Bis(2-ethylhexyl) phthalate	2/16/2009	10		ug/L	10	TA
117	SVP109846TW	Boron	2/16/2009	14.3		ug/L	10.8	TA
117	SVP109846TW	Bromodichloromethane	2/16/2009	5		ug/L	5	TA
117	SVP109846TW	Bromoform	2/16/2009	5		ug/L	5	TA
117	SVP109846TW	Bromomethane	2/16/2009	10		ug/L	10	TA
117	SVP109846TW	Butyl benzyl phthalate	2/16/2009	10		ug/L	10	TA
117	SVP109846TW	Cadmium	2/16/2009	0.45		ug/L	0.45	TA
117	SVP109846TW	Calcium	2/16/2009	82800		ug/L	93	TA
117	SVP109846TW	Carbazole	2/16/2009	10		ug/L	10	TA
117	SVP109846TW	Carbon disulfide	2/16/2009	5		ug/L	5	TA
117	SVP109846TW	Carbon tetrachloride	2/16/2009	5		ug/L	5	TA
117	SVP109846TW	Chemical Oxygen Demand	2/16/2009	10		MG/L	5	PDC
117	SVP109846TW	Chlorobenzene	2/16/2009	5		ug/L	5	TA
117	SVP109846TW	Chlorodibromomethane	2/16/2009	5		ug/L	5	TA
117	SVP109846TW	Chloroethane	2/16/2009	10		ug/L	10	TA
117	SVP109846TW	Chloroform	2/16/2009	5		ug/L	5	TA
117	SVP109846TW	Chloromethane	2/16/2009	10		ug/L	10	TA
117	SVP109846TW	Chromium	2/16/2009	3.1		ug/L	3.1	TA
117	SVP109846TW	Chrysene	2/16/2009	10		ug/L	10	TA
117	SVP109846TW	cis-1,3-Dichloropropene	2/16/2009	5		ug/L	5	TA
117	SVP109846TW	Cobalt	2/16/2009	4		ug/L	4	TA
117	SVP109846TW	Copper	2/16/2009	4.6		ug/L	4.6	TA
117	SVP109846TW	Dibenzo(a,h)anthracene	2/16/2009	10		ug/L	10	TA
117	SVP109846TW	Dibenzofuran	2/16/2009	10		ug/L	10	TA
117	SVP109846TW	Diethyl phthalate	2/16/2009	10		ug/L	10	TA
117	SVP109846TW	Dimethyl phthalate	2/16/2009	10		ug/L	10	TA
117	SVP109846TW	Di-n-butyl phthalate	2/16/2009	10		ug/L	10	TA
117	SVP109846TW	Di-n-octyl phthalate	2/16/2009	10		ug/L	10	TA
117	SVP109846TW	Ethylbenzene	2/16/2009	5		ug/L	5	TA
117	SVP109846TW	Fluoranthene	2/16/2009	10		ug/L	10	TA
117	SVP109846TW	Fluorene	2/16/2009	10		ug/L	10	TA
117	SVP109846TW	Gross Alpha of TSS Filtrate	2/16/2009	8.394	5.9	pCi/L	8.898	HISS
117	SVP109846TW	Gross Beta of TSS Filtrate	2/16/2009	1.831	6.6	pCi/L	11.17	HISS
117	SVP109846TW	GrossA	2/16/2009	10.29	6.1	pCi/L	8.898	HISS
117	SVP109846TW	GrossB	2/16/2009	-0.7322	6.4	pCi/L	11.17	HISS
117	SVP109846TW	Hexachlorobenzene	2/16/2009	10		ug/L	10	TA
117	SVP109846TW	Hexachlorobutadiene	2/16/2009	10		ug/L	10	TA
117	SVP109846TW	Hexachlorocyclopentadiene	2/16/2009	10		ug/L	10	TA
117	SVP109846TW	Hexachloroethane	2/16/2009	10		ug/L	10	TA
117	SVP109846TW	Indeno(1,2,3-cd)pyrene	2/16/2009	10		ug/L	10	TA
117	SVP109846TW	Iron	2/16/2009	213		ug/L	16	TA
117	SVP109846TW	Isophorone	2/16/2009	10		ug/L	10	TA
117	SVP109846TW	Lead	2/16/2009	1.3		ug/L	1.3	TA
117	SVP109846TW	Lithium	2/16/2009	9.6		ug/L	9.6	TA
117	SVP109846TW	m+p Methylphenol	2/16/2009	20		ug/L	20	TA
117	SVP109846TW	Magnesium	2/16/2009	21300		ug/L	110	TA
117	SVP109846TW	Manganese	2/16/2009	145		ug/L	0.96	TA
117	SVP109846TW	Methylene chloride	2/16/2009	5		ug/L	5	TA
117	SVP109846TW	Molybdenum	2/16/2009	13.9		ug/L	1.6	TA
117	SVP109846TW	Naphthalene	2/16/2009	10		ug/L	10	TA
117	SVP109846TW	Nickel	2/16/2009	13.3		ug/L	13.3	TA
117	SVP109846TW	Nitrobenzene	2/16/2009	10		ug/L	10	TA
117	SVP109846TW	N-Nitroso-di-n-propylamine	2/16/2009	10		ug/L	10	TA
117	SVP109846TW	N-Nitrosodiphenylamine	2/16/2009	10		ug/L	10	TA
117	SVP109846TW	Pentachlorophenol	2/16/2009	50		ug/L	50	TA
117	SVP109846TW	pH	2/16/2009	7.62		pH units	0.1	HISS
117	SVP109846TW	Phenanthrene	2/16/2009	10		ug/L	10	TA
117	SVP109846TW	Phenol	2/16/2009	10		ug/L	10	TA
117	SVP109846TW	Potassium	2/16/2009	1650		ug/L	1650	TA

117	SVP109846TW	Pyrene	2/16/2009	10		ug/L	10	TA
117	SVP109846TW	RA-226	2/16/2009	1.384	0.7	pCi/L	0.2344	HISS
117	SVP109846TW	Selenium	2/16/2009	10.6		ug/L	2.7	TA
117	SVP109846TW	Silver	2/16/2009	6		ug/L	6	TA
117	SVP109846TW	Sodium	2/16/2009	53000		ug/L	134	TA
117	SVP109846TW	Strontium	2/16/2009	7840		ug/L	2.7	TA
117	SVP109846TW	Styrene	2/16/2009	5		ug/L	5	TA
117	SVP109846TW	Tetrachloroethene	2/16/2009	5		ug/L	5	TA
117	SVP109846TW	TH-228	2/16/2009	0.1463	0.3	pCi/L	0.3965	HISS
117	SVP109846TW	TH-230	2/16/2009	1.099	0.9	pCi/L	0.8787	HISS
117	SVP109846TW	TH-232	2/16/2009	0.2193	0.4	pCi/L	0.8771	HISS
117	SVP109846TW	Thallium	2/16/2009	0.88		ug/L	0.88	TA
117	SVP109846TW	Toluene	2/16/2009	5		ug/L	5	TA
117	SVP109846TW	Total Suspended Solids	2/16/2009	15.2		mg/L	0.76	HISS
117	SVP109846TW	TotalU	2/16/2009	13.41361	1.2	pCi/L	1.1	HISS
117	SVP109846TW	trans-1,3-Dichloropropene	2/16/2009	5		ug/L	5	TA
117	SVP109846TW	Trichloroethene	2/16/2009	5		ug/L	5	TA
117	SVP109846TW	Uranium	2/16/2009	23.5		ug/L	23.5	TA
117	SVP109846TW	Vanadium	2/16/2009	4.1		ug/L	4.1	TA
117	SVP109846TW	Vinyl chloride	2/16/2009	10		ug/L	10	TA
117	SVP109846TW	Xylenes, total	2/16/2009	5		ug/L	5	TA
117	SVP109846TW	Zinc	2/16/2009	11.7		ug/L	5.2	TA
119	SVP109848TW	Barium	3/31/2009	44		ug/L	10	PDC
119	SVP109848TW	Gross Alpha of TSS Filtrate	3/31/2009	3.52	4.9	pCi/L	8.186	HISS
119	SVP109848TW	Gross Beta of TSS Filtrate	3/31/2009	0.9153	6.5	pCi/L	11.13	HISS
119	SVP109848TW	GrossA	3/31/2009	2.166	4.8	pCi/L	8.186	HISS
119	SVP109848TW	GrossB	3/31/2009	4.577	6.7	pCi/L	11.13	HISS
119	SVP109848TW	Lead	3/31/2009	10		ug/L	10	PDC
119	SVP109848TW	pH	3/31/2009	7.63		pH units	0.1	HISS
119	SVP109848TW	RA-226	3/31/2009	0.438	0.4	pCi/L	0.5373	HISS
119	SVP109848TW	Selenium	3/31/2009	10		ug/L	10	PDC
119	SVP109848TW	TH-228	3/31/2009	0.153	0.3	pCi/L	0.5144	HISS
119	SVP109848TW	TH-230	3/31/2009	0.674	0.4	pCi/L	0.451	HISS
119	SVP109848TW	TH-232	3/31/2009	-0.06116	0.1	pCi/L	0.4502	HISS
119	SVP109848TW	Total Suspended Solids	3/31/2009	5		mg/L	0.76	HISS
119	SVP109848TW	TotalU	3/31/2009	7.032261	0.6	pCi/L	1.1	HISS
119	SVP109849TW	Gross Alpha of TSS Filtrate	4/1/2009	5.416	5.2	pCi/L	8.186	HISS
119	SVP109849TW	Gross Beta of TSS Filtrate	4/1/2009	3.295	6.7	pCi/L	11.13	HISS
119	SVP109849TW	GrossA	4/1/2009	4.062	5	pCi/L	8.186	HISS
119	SVP109849TW	GrossB	4/1/2009	-0.1831	6.5	pCi/L	11.13	HISS
119	SVP109849TW	pH	4/1/2009	7.61		pH units	0.1	HISS
119	SVP109849TW	RA-226	4/1/2009	0.7358	0.5	pCi/L	0.4923	HISS
119	SVP109849TW	TH-228	4/1/2009	0.1041	0.2	pCi/L	0.4164	HISS
119	SVP109849TW	TH-230	4/1/2009	0.7646	0.5	pCi/L	0.1884	HISS
119	SVP109849TW	TH-232	4/1/2009	0.1041	0.2	pCi/L	0.4162	HISS
119	SVP109849TW	Total Suspended Solids	4/1/2009	4		mg/L	0.76	HISS
119	SVP109849TW	TotalU	4/1/2009	6.760795	0.6	pCi/L	1.1	HISS
120	SVP109850TW	Barium	4/2/2009	66		ug/L	10	PDC
120	SVP109850TW	Gross Alpha of TSS Filtrate	4/2/2009	35.2	8.3	pCi/L	7.279	HISS
120	SVP109850TW	Gross Beta of TSS Filtrate	4/2/2009	0.9153	7.1	pCi/L	12.14	HISS
120	SVP109850TW	GrossA	4/2/2009	30.06	7.7	pCi/L	7.279	HISS
120	SVP109850TW	GrossB	4/2/2009	12.14	7.1	pCi/L	12.14	HISS
120	SVP109850TW	Lead	4/2/2009	10		ug/L	10	PDC
120	SVP109850TW	pH	4/2/2009	8.43		pH units	0.1	HISS
120	SVP109850TW	RA-226	4/2/2009	1.008	0.5	pCi/L	0.3901	HISS
120	SVP109850TW	Selenium	4/2/2009	29		ug/L	10	PDC
120	SVP109850TW	TH-228	4/2/2009	-0.06439	0.1	pCi/L	0.4739	HISS
120	SVP109850TW	TH-230	4/2/2009	0.9026	0.5	pCi/L	0.1747	HISS
120	SVP109850TW	TH-232	4/2/2009	0.06435	0.1	pCi/L	0.1744	HISS
120	SVP109850TW	Total Suspended Solids	4/2/2009	6		mg/L	0.76	HISS
120	SVP109850TW	TotalU	4/2/2009	32.93191	3	pCi/L	1.1	HISS
121	SVP109851TW	Barium	4/6/2009	69		ug/L	10	PDC

121	SVP109851TW	Gross Alpha of TSS Filtrate	4/6/2009	22.47	7.1	pCi/L	7.97	HISS
121	SVP109851TW	Gross Beta of TSS Filtrate	4/6/2009	6.773	6.4	pCi/L	10.28	HISS
121	SVP109851TW	GrossA	4/6/2009	29.24	7.8	pCi/L	7.97	HISS
121	SVP109851TW	GrossB	4/6/2009	13.91	6.8	pCi/L	10.28	HISS
121	SVP109851TW	Lead	4/6/2009	10		ug/L	10	PDC
121	SVP109851TW	pH	4/6/2009	7.73		pH units	0.1	HISS
121	SVP109851TW	RA-226	4/6/2009	0.3843	0.4	pCi/L	0.4192	HISS
121	SVP109851TW	Selenium	4/6/2009	29		ug/L	10	PDC
121	SVP109851TW	TH-228	4/6/2009	0.2758	0.3	pCi/L	0.3674	HISS
121	SVP109851TW	TH-230	4/6/2009	0.8586	0.5	pCi/L	0.1662	HISS
121	SVP109851TW	TH-232	4/6/2009	0.06121	0.1	pCi/L	0.1659	HISS
121	SVP109851TW	Total Suspended Solids	4/6/2009	6		mg/L	0.76	HISS
121	SVP109851TW	TotalU	4/6/2009	32.04696	2.9	pCi/L	1.1	HISS
121	SVP109853TW	Gross Alpha of TSS Filtrate	4/7/2009	30.33	7.7	pCi/L	7.279	HISS
121	SVP109853TW	Gross Beta of TSS Filtrate	4/7/2009	4.577	7	pCi/L	11.67	HISS
121	SVP109853TW	GrossA	4/7/2009	27.62	7.4	pCi/L	7.279	HISS
121	SVP109853TW	GrossB	4/7/2009	8.604	7.3	pCi/L	11.67	HISS
121	SVP109853TW	pH	4/7/2009	8.28		pH units	0.1	HISS
121	SVP109853TW	RA-226	4/7/2009	0.463	0.4	pCi/L	0.4272	HISS
121	SVP109853TW	TH-228	4/7/2009	-0.03057	0.2	pCi/L	0.5138	HISS
121	SVP109853TW	TH-230	4/7/2009	0.5508	0.4	pCi/L	0.1658	HISS
121	SVP109853TW	TH-232	4/7/2009	0.1655	0	pCi/L	0.1655	HISS
121	SVP109853TW	Total Suspended Solids	4/7/2009	5.5		mg/L	0.76	HISS
121	SVP109853TW	TotalU	4/7/2009	34.78762	3.2	pCi/L	1.1	HISS
121	SVP109854TW	Gross Alpha of TSS Filtrate	4/8/2009	29.79	7.6	pCi/L	7.032	HISS
121	SVP109854TW	Gross Beta of TSS Filtrate	4/8/2009	5.309	6.8	pCi/L	11.2	HISS
121	SVP109854TW	GrossA	4/8/2009	34.66	8.2	pCi/L	7.032	HISS
121	SVP109854TW	GrossB	4/8/2009	5.492	6.8	pCi/L	11.2	HISS
121	SVP109854TW	pH	4/8/2009	8.84		pH units	0.1	HISS
121	SVP109854TW	RA-226	4/8/2009	0.5018	0.5	pCi/L	0.6657	HISS
121	SVP109854TW	TH-228	4/8/2009	0.06537	0.2	pCi/L	0.4812	HISS
121	SVP109854TW	TH-230	4/8/2009	0.5891	0.4	pCi/L	0.1774	HISS
121	SVP109854TW	TH-232	4/8/2009	0.1771	0	pCi/L	0.1771	HISS
121	SVP109854TW	Total Suspended Solids	4/8/2009	3.2		mg/L	0.76	HISS
121	SVP109854TW	TotalU	4/8/2009	32.22642	2.9	pCi/L	1.1	HISS
122	SVP109852TW	Barium	4/6/2009	42		ug/L	10	PDC
122	SVP109852TW	Gross Alpha of TSS Filtrate	4/6/2009	1.895	4.6	pCi/L	7.97	HISS
122	SVP109852TW	Gross Beta of TSS Filtrate	4/6/2009	4.943	6.3	pCi/L	10.28	HISS
122	SVP109852TW	GrossA	4/6/2009	10.83	5.7	pCi/L	7.97	HISS
122	SVP109852TW	GrossB	4/6/2009	4.577	6.2	pCi/L	10.28	HISS
122	SVP109852TW	Lead	4/6/2009	10		ug/L	10	PDC
122	SVP109852TW	pH	4/6/2009	8.19		pH units	0.1	HISS
122	SVP109852TW	RA-226	4/6/2009	0.5132	0.4	pCi/L	0.5395	HISS
122	SVP109852TW	Selenium	4/6/2009	10		ug/L	10	PDC
122	SVP109852TW	TH-228	4/6/2009	0.1555	0.2	pCi/L	0.3731	HISS
122	SVP109852TW	TH-230	4/6/2009	1.277	0.6	pCi/L	0.3735	HISS
122	SVP109852TW	TH-232	4/6/2009	0.1243	0.2	pCi/L	0.1685	HISS
122	SVP109852TW	Total Suspended Solids	4/6/2009	2		mg/L	0.76	HISS
122	SVP109852TW	TotalU	4/6/2009	6.578978	0.6	pCi/L	1.1	HISS
123	SVP109855TW	Barium	4/14/2009	34		ug/L	10	PDC
123	SVP109855TW	Gross Alpha of TSS Filtrate	4/14/2009	1.895	4.9	pCi/L	8.499	HISS
123	SVP109855TW	Gross Beta of TSS Filtrate	4/14/2009	-6.59	7.2	pCi/L	12.87	HISS
123	SVP109855TW	GrossA	4/14/2009	5.145	5.3	pCi/L	8.499	HISS
123	SVP109855TW	GrossB	4/14/2009	-7.505	7.2	pCi/L	12.87	HISS
123	SVP109855TW	Lead	4/14/2009	10		ug/L	10	PDC
123	SVP109855TW	pH	4/14/2009	8.43		pH units	0.1	HISS
123	SVP109855TW	RA-226	4/14/2009	0.2074	0.3	pCi/L	0.5088	HISS
123	SVP109855TW	Selenium	4/14/2009	10		ug/L	10	PDC
123	SVP109855TW	TH-228	4/14/2009	0.09593	0.2	pCi/L	0.5376	HISS
123	SVP109855TW	TH-230	4/14/2009	1.217	0.6	pCi/L	0.1735	HISS
123	SVP109855TW	TH-232	4/14/2009	0.1732	0	pCi/L	0.1732	HISS
123	SVP109855TW	Total Suspended Solids	4/14/2009	5.2		mg/L	0.76	HISS

123	SVP109855TW	TotalU	4/14/2009	5.14[illegible].04	0.5	pCi/L	1.1	HISS
124	SVP109856TW	Barium	4/15/2009	73		ug/L	10	PDC
124	SVP109856TW	Gross Alpha of TSS Filtrate	4/15/2009	182	25	pCi/L	8.292	HISS
124	SVP109856TW	Gross Beta of TSS Filtrate	4/15/2009	21.05	8.3	pCi/L	12.3	HISS
124	SVP109856TW	GrossA	4/15/2009	194.2	26	pCi/L	8.292	HISS
124	SVP109856TW	GrossB	4/15/2009	32.58	8.9	pCi/L	12.3	HISS
124	SVP109856TW	Lead	4/15/2009	10		ug/L	10	PDC
124	SVP109856TW	pH	4/15/2009	7.89		pH units	0.1	HISS
124	SVP109856TW	RA-226	4/15/2009	3.027	1.1	pCi/L	0.6963	HISS
124	SVP109856TW	Selenium	4/15/2009	810		ug/L	10	PDC
124	SVP109856TW	TH-228	4/15/2009	0.1257	0.3	pCi/L	0.5026	HISS
124	SVP109856TW	TH-230	4/15/2009	19.25	4.2	pCi/L	0.5032	HISS
124	SVP109856TW	TH-232	4/15/2009	0.04187	0.2	pCi/L	0.5023	HISS
124	SVP109856TW	Total Suspended Solids	4/15/2009	8.8		mg/L	0.76	HISS
124	SVP109856TW	TotalU	4/15/2009	204.1128	26	pCi/L	1.1	HISS
124	SVP109857TW	Gross Alpha of TSS Filtrate	4/16/2009	41.7	9.1	pCi/L	7.517	HISS
124	SVP109857TW	Gross Beta of TSS Filtrate	4/16/2009	1.831	6.9	pCi/L	11.7	HISS
124	SVP109857TW	GrossA	4/16/2009	51.72	10	pCi/L	7.517	HISS
124	SVP109857TW	GrossB	4/16/2009	9.336	7.3	pCi/L	11.7	HISS
124	SVP109857TW	pH	4/16/2009	8.53		pH units	0.1	HISS
124	SVP109857TW	RA-226	4/16/2009	2.061	1.2	pCi/L	0.9156	HISS
124	SVP109857TW	TH-228	4/16/2009	0.1454	0.3	pCi/L	0.5349	HISS
124	SVP109857TW	TH-230	4/16/2009	1.783	0.8	pCi/L	0.4365	HISS
124	SVP109857TW	TH-232	4/16/2009	0.2179	0.3	pCi/L	0.1968	HISS
124	SVP109857TW	Total Suspended Solids	4/16/2009	7		mg/L	0.76	HISS
124	SVP109857TW	TotalU	4/16/2009	53.69442	6.8	pCi/L	1.1	HISS
125	SVP109858TW	Barium	4/20/2009	60		ug/L	10	PDC
125	SVP109858TW	Gross Alpha of TSS Filtrate	4/20/2009	41.97	9.4	pCi/L	8.186	HISS
125	SVP109858TW	Gross Beta of TSS Filtrate	4/20/2009	11.17	7	pCi/L	10.86	HISS
125	SVP109858TW	GrossA	4/20/2009	37.37	8.8	pCi/L	8.186	HISS
125	SVP109858TW	GrossB	4/20/2009	11.72	7	pCi/L	10.86	HISS
125	SVP109858TW	Lead	4/20/2009	10		ug/L	10	PDC
125	SVP109858TW	pH	4/20/2009	7.6		pH units	0.1	HISS
125	SVP109858TW	RA-226	4/20/2009	0.5409	0.4	pCi/L	0.4991	HISS
125	SVP109858TW	Selenium	4/20/2009	62		ug/L	10	PDC
125	SVP109858TW	TH-228	4/20/2009	0.3712	0.3	pCi/L	0.2012	HISS
125	SVP109858TW	TH-230	4/20/2009	0.6317	0.5	pCi/L	0.4458	HISS
125	SVP109858TW	TH-232	4/20/2009	0.201	0	pCi/L	0.201	HISS
125	SVP109858TW	Total Suspended Solids	4/20/2009	2.6		mg/L	0.76	HISS
125	SVP109858TW	TotalU	4/20/2009	50.31424	6.3	pCi/L	1.1	HISS
126	SVP109859TW	Barium	4/21/2009	72		ug/L	10	PDC
126	SVP109859TW	Gross Alpha of TSS Filtrate	4/21/2009	133	19	pCi/L	6.775	HISS
126	SVP109859TW	Gross Beta of TSS Filtrate	4/21/2009	25.45	8	pCi/L	11.27	HISS
126	SVP109859TW	GrossA	4/21/2009	144.9	21	pCi/L	6.775	HISS
126	SVP109859TW	GrossB	4/21/2009	33.5	8.5	pCi/L	11.27	HISS
126	SVP109859TW	Lead	4/21/2009	10		ug/L	10	PDC
126	SVP109859TW	pH	4/21/2009	7.45		pH units	0.1	HISS
126	SVP109859TW	RA-226	4/21/2009	2.107	0.9	pCi/L	0.4956	HISS
126	SVP109859TW	Selenium	4/21/2009	810		ug/L	10	PDC
126	SVP109859TW	TH-228	4/21/2009	0.2682	0.3	pCi/L	0.1817	HISS
126	SVP109859TW	TH-230	4/21/2009	4.699	1.4	pCi/L	0.4941	HISS
126	SVP109859TW	TH-232	4/21/2009	-0.0335	0.1	pCi/L	0.4019	HISS
126	SVP109859TW	Total Suspended Solids	4/21/2009	20		mg/L	0.76	HISS
126	SVP109859TW	TotalU	4/21/2009	163.6267	21	pCi/L	1.1	HISS
127	SVP109860TW	Barium	5/12/2009	46		ug/L	10	PDC
127	SVP109860TW	Gross Alpha of TSS Filtrate	5/12/2009	3.249	4.2	pCi/L	6.905	HISS
127	SVP109860TW	Gross Beta of TSS Filtrate	5/12/2009	2.38	7.1	pCi/L	11.89	HISS
127	SVP109860TW	GrossA	5/12/2009	3.52	4.2	pCi/L	6.905	HISS
127	SVP109860TW	GrossB	5/12/2009	-2.929	6.8	pCi/L	11.89	HISS
127	SVP109860TW	Lead	5/12/2009	10		ug/L	10	PDC
127	SVP109860TW	pH	5/12/2009	9.66		pH units	0.1	HISS
127	SVP109860TW	RA-226	5/12/2009	1.553	0.7	pCi/L	0.6868	HISS

127	SVP109860TW	Selenium	5/12/2009	10		ug/L	10	PDC
127	SVP109860TW	TH-228	5/12/2009	0.1006	0.2	pCi/L	0.2726	HISS
127	SVP109860TW	TH-230	5/12/2009	0.4028	0.4	pCi/L	0.2729	HISS
127	SVP109860TW	TH-232	5/12/2009	0.2724	0	pCi/L	0.2724	HISS
127	SVP109860TW	Total Suspended Solids	5/12/2009	0.8		mg/L	0.76	HISS
127	SVP109860TW	TotalU	5/12/2009	0.94684	0.1	pCi/L	1.1	HISS
128	SVP109861TW	Barium	5/18/2009	44		ug/L	10	PDC
128	SVP109861TW	Gross Alpha of TSS Filtrate	5/18/2009	4.062	4.8	pCi/L	7.748	HISS
128	SVP109861TW	Gross Beta of TSS Filtrate	5/18/2009	11.5	6.7	pCi/L	11.5	HISS
128	SVP109861TW	GrossA	5/18/2009	3.791	4.7	pCi/L	7.748	HISS
128	SVP109861TW	GrossB	5/18/2009	-0.7322	6.7	pCi/L	11.5	HISS
128	SVP109861TW	Lead	5/18/2009	10		ug/L	10	PDC
128	SVP109861TW	pH	5/18/2009	8.48		pH units	0.1	HISS
128	SVP109861TW	RA-226	5/18/2009	-0.07488	0.3	pCi/L	0.8057	HISS
128	SVP109861TW	Selenium	5/18/2009	10		ug/L	10	PDC
128	SVP109861TW	TH-228	5/18/2009	0.2429	0.3	pCi/L	0.4163	HISS
128	SVP109861TW	TH-230	5/18/2009	0.4169	0.4	pCi/L	0.5114	HISS
128	SVP109861TW	TH-232	5/18/2009	-0.06936	0.1	pCi/L	0.5105	HISS
128	SVP109861TW	Total Suspended Solids	5/18/2009	1.8		mg/L	0.76	HISS
128	SVP109861TW	TotalU	5/18/2009	1.186563	0.1	pCi/L	1.1	HISS
129	SVP109862TW	Barium	6/1/2009	150		ug/L	10	PDC
129	SVP109862TW	Gross Alpha of TSS Filtrate	6/1/2009	41.43	9.1	pCi/L	7.399	HISS
129	SVP109862TW	Gross Beta of TSS Filtrate	6/1/2009	4.943	6.7	pCi/L	11.07	HISS
129	SVP109862TW	GrossA	6/1/2009	60.66	11	pCi/L	7.399	HISS
129	SVP109862TW	GrossB	6/1/2009	22.7	7.7	pCi/L	11.07	HISS
129	SVP109862TW	Lead	6/1/2009	10		ug/L	10	PDC
129	SVP109862TW	pH	6/1/2009	7.96		pH units	0.1	HISS
129	SVP109862TW	RA-226	6/1/2009	1.735	0.8	pCi/L	0.6723	HISS
129	SVP109862TW	Selenium	6/1/2009	420		ug/L	10	PDC
129	SVP109862TW	TH-228	6/1/2009	0.3701	0.4	pCi/L	0.5449	HISS
129	SVP109862TW	TH-230	6/1/2009	29.94	5.6	pCi/L	0.5455	HISS
129	SVP109862TW	TH-232	6/1/2009	0.07398	0.1	pCi/L	0.2005	HISS
129	SVP109862TW	Total Suspended Solids	6/1/2009	137.14286		mg/L	0.76	HISS
129	SVP109862TW	TotalU	6/1/2009	47.34409	4.3	pCi/L	1.1	HISS
130	SVP109863TW	Barium	6/4/2009	58		ug/L	10	PDC
130	SVP109863TW	Gross Alpha of TSS Filtrate	6/4/2009	17.87	6.1	pCi/L	6.775	HISS
130	SVP109863TW	Gross Beta of TSS Filtrate	6/4/2009	2.746	6.6	pCi/L	11.07	HISS
130	SVP109863TW	GrossA	6/4/2009	23.29	6.7	pCi/L	6.775	HISS
130	SVP109863TW	GrossB	6/4/2009	3.478	6.6	pCi/L	11.07	HISS
130	SVP109863TW	Lead	6/4/2009	10		ug/L	10	PDC
130	SVP109863TW	pH	6/4/2009	7.5		pH units	0.1	HISS
130	SVP109863TW	RA-226	6/4/2009	0.9637	0.7	pCi/L	0.8867	HISS
130	SVP109863TW	Selenium	6/4/2009	640		ug/L	10	PDC
130	SVP109863TW	TH-228	6/4/2009	0.4107	0.4	pCi/L	0.4479	HISS
130	SVP109863TW	TH-230	6/4/2009	2.43	0.9	pCi/L	0.4485	HISS
130	SVP109863TW	TH-232	6/4/2009	0.2023	0	pCi/L	0.2023	HISS
130	SVP109863TW	Total Suspended Solids	6/4/2009	1.86		mg/L	0.76	HISS
130	SVP109863TW	TotalU	6/4/2009	12.80853	1.2	pCi/L	1.1	HISS
131	SVP109864TW	Barium	6/16/2009	91		ug/L	10	PDC
131	SVP109864TW	Gross Alpha of TSS Filtrate	6/16/2009	-1.083	4.1	pCi/L	7.633	HISS
131	SVP109864TW	Gross Beta of TSS Filtrate	6/16/2009	-3.112	6.5	pCi/L	11.5	HISS
131	SVP109864TW	GrossA	6/16/2009	5.686	4.9	pCi/L	7.633	HISS
131	SVP109864TW	GrossB	6/16/2009	0.5492	6.7	pCi/L	11.5	HISS
131	SVP109864TW	Lead	6/16/2009	14		ug/L	10	PDC
131	SVP109864TW	pH	6/16/2009	7.64		pH units	0.1	HISS
131	SVP109864TW	RA-226	6/16/2009	0.1602	0.4	pCi/L	0.8628	HISS
131	SVP109864TW	Selenium	6/16/2009	10		ug/L	10	PDC
131	SVP109864TW	TH-228	6/16/2009	0.2073	0.3	pCi/L	0.4892	HISS
131	SVP109864TW	TH-230	6/16/2009	2.342	0.9	pCi/L	0.4002	HISS
131	SVP109864TW	TH-232	6/16/2009	0.1835	0	pCi/L	0.1835	HISS
131	SVP109864TW	Total Suspended Solids	6/16/2009	29.6		mg/L	0.76	HISS
131	SVP109864TW	TotalU	6/16/2009	1.563478	0.1	pCi/L	1.1	HISS

131	SVP109866TW	Gross Alpha of TSS Filtrate	6/17/2009	[illegible]23	4.6	pCi/L	8.079	HISS
131	SVP109866TW	Gross Beta of TSS Filtrate	6/17/2009	-3.661	6.9	pCi/L	12.11	HISS
131	SVP109866TW	GrossA	6/17/2009	1.625	4.7	pCi/L	8.079	HISS
131	SVP109866TW	GrossB	6/17/2009	-0.9153	7	pCi/L	12.11	HISS
131	SVP109866TW	pH	6/17/2009	7.65		pH units	0.1	HISS
131	SVP109866TW	RA-226	6/17/2009	0.5229	0.4	pCi/L	0.517	HISS
131	SVP109866TW	TH-228	6/17/2009	0.4358	0.4	pCi/L	0.4647	HISS
131	SVP109866TW	TH-230	6/17/2009	1.23	0.7	pCi/L	0.6493	HISS
131	SVP109866TW	TH-232	6/17/2009	-0.03699	0.1	pCi/L	0.4644	HISS
131	SVP109866TW	Total Suspended Solids	6/17/2009	7.4		mg/L	0.76	HISS
131	SVP109866TW	TotalU	6/17/2009	1.489457	0.1	pCi/L	1.1	HISS
132	SVP109867TW	Barium	6/22/2009	83		ug/L	10	PDC
132	SVP109867TW	Gross Alpha of TSS Filtrate	6/22/2009	2.979	4.4	pCi/L	7.279	HISS
132	SVP109867TW	Gross Beta of TSS Filtrate	6/22/2009	1.281	6.8	pCi/L	11.6	HISS
132	SVP109867TW	GrossA	6/22/2009	3.791	4.5	pCi/L	7.279	HISS
132	SVP109867TW	GrossB	6/22/2009	-0.5492	6.7	pCi/L	11.6	HISS
132	SVP109867TW	Lead	6/22/2009	10		ug/L	10	PDC
132	SVP109867TW	pH	6/22/2009	8.46		pH units	0.1	HISS
132	SVP109867TW	RA-226	6/22/2009	1.308	0.7	pCi/L	0.5409	HISS
132	SVP109867TW	Selenium	6/22/2009	10		ug/L	10	PDC
132	SVP109867TW	TH-228	6/22/2009	0.1334	0.3	pCi/L	0.515	HISS
132	SVP109867TW	TH-230	6/22/2009	1.747	0.8	pCi/L	0.2367	HISS
132	SVP109867TW	TH-232	6/22/2009	0.0872	0.2	pCi/L	0.2363	HISS
132	SVP109867TW	Total Suspended Solids	6/22/2009	19.4		mg/L	0.76	HISS
132	SVP109867TW	TotalU	6/22/2009	2.769909	0.3	pCi/L	1.1	HISS

FUSRAP SLDS
...lf Monitoring Report for 2nd Quarter 2009

Parameter	Batch Number	Date of Discharge	Batch Results	Amount Discharged (gallons)	Total Activity per Discharge (Ci)	MSD Limits	10CFR20 Limits	10CFR20 Sum of Ratios
Gross Alpha (raw water)	SLDS-BK450[3]	03/31/09 (6WH)	90 pCi/L	13,534	4.6E-06	3,000 pCi/L	3,000 pCi/L	
Gross Beta			26 pCi/L		1.3E-06	N/A	N/A	
TH-228			<0.4 pCi/L		1.0E-08	2,000 pCi/L	2,000 pCi/L	
TH-230			0.4 pCi/L		2.0E-08	1,000 pCi/L	1,000 pCi/L	
TH-232			<0.2 pCi/L		4.6E-09	300 pCi/L	300 pCi/L	
Uranium (KPA)			107 pCi/L		5.5E-06	3,000 pCi/L	3,000 pCi/L	
RA-226			<0.4 pCi/L		1.1E-08	10 pCi/L	600 pCi/L	
RA-228[2]			<0.4 pCi/L		1.0E-08	30 pCi/L	600 pCi/L	0.04
Total Suspended Solids			10 mg/L					
Gross Alpha (raw water)	SLDS-BK451[4]	04/11/09 - 04/13/09 (6WH)	43 pCi/L	31,160	5.1E-06	3,000 pCi/L	3,000 pCi/L	
Gross Beta			26 pCi/L		3.1E-06	N/A	N/A	
TH-228			<0.2 pCi/L		1.0E-08	2,000 pCi/L	2,000 pCi/L	
TH-230			1 pCi/L		1.2E-07	1,000 pCi/L	1,000 pCi/L	
TH-232			<0.2 pCi/L		1.0E-08	300 pCi/L	300 pCi/L	
Uranium (KPA)			29 pCi/L		3.4E-06	3,000 pCi/L	3,000 pCi/L	
RA-226			0.7 pCi/L		8.3E-08	10 pCi/L	600 pCi/L	
RA-228[2]			<0.2 pCi/L		1.0E-08	30 pCi/L	600 pCi/L	0.01
Total Suspended Solids			98 mg/L					
Gross Alpha (raw water)	SLDS-BK452[5]	04/20/09 - 04/22/09 (6WH)	51 pCi/L	24,652	4.8E-06	3,000 pCi/L	3,000 pCi/L	
Gross Beta			35 pCi/L		3.3E-06	N/A	N/A	
TH-228			<0.6 pCi/L		2.1E-08	2,000 pCi/L	2,000 pCi/L	
TH-230			2 pCi/L		1.7E-07	1,000 pCi/L	1,000 pCi/L	
TH-232			<0.4 pCi/L		1.7E-08	300 pCi/L	300 pCi/L	
Uranium (KPA)			60 pCi/L		5.8E-06	3,000 pCi/L	3,000 pCi/L	
RA-226			1 pCi/L		9.3E-08	10 pCi/L	600 pCi/L	
RA-228[2]			<0.5 pCi/L		2.1E-08	30 pCi/L	600 pCi/L	0.02
Total Suspended Solids			65 mg/L					
Gross Alpha (raw water)	SLDS-BK453[6]	05/11/09 - 05/28/09 (6WH)	19 pCi/L	23,503	1.7E-06	3,000 pCi/L	3,000 pCi/L	
Gross Beta			<12 pCi/L		5.4E-07	N/A	N/A	
TH-228			<0.6 pCi/L		2.4E-08	2,000 pCi/L	2,000 pCi/L	
TH-230			0.9 pCi/L		8.0E-08	1,000 pCi/L	1,000 pCi/L	
TH-232			<0.4 pCi/L		1.6E-08	300 pCi/L	300 pCi/L	
Uranium (KPA)			21 pCi/L		1.9E-06	3,000 pCi/L	3,000 pCi/L	
RA-226			<1 pCi/L		4.3E-08	10 pCi/L	600 pCi/L	
RA-228[2]			<0.6 pCi/L		2.4E-08	30 pCi/L	600 pCi/L	0.01
Total Suspended Solids			13 mg/L					
Gross Alpha (raw water)	SLDS-BK454[7,8]	06/03/09 - 06/16/09 (6WH)	52 pCi/L	65,110	1.3E-05	3,000 pCi/L	3,000 pCi/L	
Gross Beta			102 pCi/L		2.5E-05	N/A	N/A	
TH-228			<0.5 pCi/L		6.7E-08	2,000 pCi/L	2,000 pCi/L	
TH-230			3 pCi/L		7.4E-07	1,000 pCi/L	1,000 pCi/L	
TH-232			<0.4 pCi/L		5.1E-08	300 pCi/L	300 pCi/L	
Uranium (KPA)			59 pCi/L		1.5E-05	3,000 pCi/L	3,000 pCi/L	
RA-226			1 pCi/L		3.2E-07	10 pCi/L	600 pCi/L	
RA-228[2]			<0.5 pCi/L		6.7E-08	30 pCi/L	600 pCi/L	0.03
Total Suspended Solids			118 mg/L					

NOTES:

[1] Non detect sample results are converted to half the detection limit.
[2] Ra-228 assumed to be in equilibrium with Th-228
[3] Batch 450 occurred late in the First Quarter and was not included in the First Quarter Report.
[4] See Attachment 1 - Batch 451 Continuous Discharge Table
[5] See Attachment 2 - Batch 452 Continuous Discharge Table
[6] See Attachment 3 - Batch 453 Continuous Discharge Table
[7] See Attachment 4 - Batch 454 Continuous Discharge Table
[8] Batch 455 occurred late in the Second Quarter and will be included in the Third Quarter Report.
N/A--Not applicable

Total Activity Discharged in 2nd Quarter of CY09 (Ci)

TH-228	1.3E-07
TH-230	1.1E-06
TH-232	1.0E-07
Uranium (KPA)	3.1E-05
RA-226	5.5E-07
RA-228[2]	1.3E-07

Total Activity Discharged through 06/30/09 (Ci)

TH-228	3.3E-07
TH-230	1.8E-06
TH-232	2.2E-07
Uranium (KPA)	5.0E-04
RA-226	8.3E-07
RA-228[2]	3.3E-07

Total Volume Discharged in 2nd Quarter of CY09 (gal)

Gallons	157,959

Total Volume Discharged through 06/30/09 (gal)

Gallons	301,440

Attachment 1
FUSRAP SLDS
Batch 451 Continuous Discharge Table 04/11/09 - 04/13/09

Date:	04/11/09	04/13/09	Total	Result
Volume Discharged:	22,156	9,004	31,160	
Sample ID:	No Sample[4]	SLD110554		
SLDS				
Gross Alpha, raw water, unfiltered (HISS, pCi/L):		43		43
Gross Beta, raw water, unfiltered (HISS, pCi/L):		26		26
Total Uranium, KPA (filtered, HISS, pCi/L):		29		29
TSS (HISS, mg/l):		98		98
Isotopics (HISS, pCi/l):				
Th-228		0.17		0.17
Th-230		1.04		1.04
Th-232		0.06		0.06
Ra-226		0.70		0.70
Ra-228		0.17		0.17

[1]Ra-228 and Th-228 assumed to be in equilibrium

[2]Volume weighted average was used to calculate the total activity.

[3]Used highest MDA for calculation

[4] A sample was not collected until 04/13/09. The sample (SLD110554) collected on 04/13/09 is representative of the entire batch.

NA - Not applicable

Attachment 2
FUSRAP SLDS
Batch 452 Continuous Discharge Table 04/20/09 - 04/30/09

Date:	04/20/09	04/23/09	04/30/09	Total	Result
Volume Discharged:	12,242	4,455	7,985	24,682	
Sample ID:	SLD110555	SLD110556	SLD110557		
SLDS					
Gross Alpha, raw water, unfiltered (HISS, pCi/L):	32	73	69		51
Gross Beta, raw water, unfiltered (HISS, pCi/L):	30	32	44		35
Total Uranium, KPA (filtered, HISS, pCi/L):	34	86	84		60
TSS (HISS, mg/l):	76	58	54		65
Isotopics (HISS, pCi/l):					
Th-228	0.09	0.25	0.42		0.22
Th-230	1.86	2.28	1.67		1.88
Th-232	0.03	0.55	0.35		0.23
Ra-226	0.93	0.88	1.10		0.98
Ra-228	0.09	0.25	0.42		0.22

[1]Ra-228 and Th-228 assumed to be in equilibrium

[2]Volume weighted average was used to calculate the total activity.

[3]Used highest MDA for calculation

NA - Not applicable

Attachment 3
FUSRAP SLDS
Batch 453 Continuous Discharge Table 05/11/09 - 05/28/09

Date:	05/11/09	05/14/09	05/26/09	05/28/09	Total	Result
Volume Discharged:	6,018	2,197	11,808	3,480	23,503	
Sample ID:	SLD110558	SLD110559	SLD110560	SLD110561		
SLDS						
Gross Alpha, raw water, unfiltered (HISS, pCi/L):	17	32	20	11		19
Gross Beta, raw water, unfiltered (HISS, pCi/L):	6	14	9	7		8
Total Uranium, KPA (filtered, HISS, pCi/L):	20	38	22	9		21
TSS (HISS, mg/l):	6	45	7	26		13
Isotopics (HISS, pCi/l):						
Th-228	0.44	0.48	0.44	0.38		0.44
Th-230	0.33	1.70	0.96	1.40		0.93
Th-232	0.07	0.17	0.15	0.23		0.14
Ra-226	0.79	1.29	0.67	0.98		0.80
Ra-228	0.44	0.48	0.44	0.38		0.44

[1]Ra-228 and Th-228 assumed to be in equilibrium

[2]Volume weighted average was used to calculate the total activity.

[3]Used highest MDA for calculation

NA - Not applicable

Attachment 4
FUSRAP SLDS
Batch 454 Continuous Discharge Table 06/03/09 - 06/16/09

Date:	06/03/09	06/10/09	06/11/09	06/15/09	06/16/09	Total	Result
Volume Discharged:	4,080	3,630	9,405	26,400	21,615	65,110	
Sample ID:	SLD110562	SLD110563	SLD110564	SLD110565	SLD110566		
SLDS							
Gross Alpha, raw water, unfiltered (HISS, pCi/L):	37	27	7	41	92		52
Gross Beta, raw water, unfiltered (HISS, pCi/L):	33	15	0	81	199		102
Total Uranium, KPA (filtered, HISS, pCi/L):	47	37	3	37	118		59
TSS (HISS, mg/l):	50	2	1	86	240		118
Isotopics (HISS, pCi/l):							
Th-228	0.16	0.21	0.38	0.36	0.79		0.49
Th-230	1.38	0.90	0.67	2.55	5.99		3.25
Th-232	0.42	0.08	0.07	0.11	0.39		0.21
Ra-226	1.06	0.84	0.65	1.16	1.76		1.26
Ra-228	0.16	0.21	0.38	0.38	0.79		0.49

[1]Ra-228 and Th-228 assumed to be in equilibrium
[2]Volume weighted average was used to calculate the total activity.
[3]Used highest MDA for calculation
NA - Not applicable

450	SLD110553TW	Gross Alpha of TSS Filtrate	3/31/2009	107.5	16.71	pCi/L	8.186	HISS
450	SLD110553TW	Gross Beta of TSS Filtrate	3/31/2009	16.48	7.416	pCi/L	11.13	HISS
450	SLD110553TW	GrossA	3/31/2009	89.09	14.65	pCi/L	8.186	HISS
450	SLD110553TW	GrossB	3/31/2009	25.81	7.966	pCi/L	11.13	HISS
450	SLD110553TW	pH	3/31/2009	6.78		pH units	0.1	HISS
450	SLD110553TW	RA-226	3/31/2009	0.1708	0.2486	pCi/L	0.4099	HISS
450	SLD110553TW	TH-228	3/31/2009	0.1637	0.2376	pCi/L	0.3928	HISS
450	SLD110553TW	TH-230	3/31/2009	0.3934	0.3274	pCi/L	0.1777	HISS
450	SLD110553TW	TH-232	3/31/2009	0.1774	0	pCi/L	0.1774	HISS
450	SLD110553TW	Total Suspended Solids	3/31/2009	10.2		mg/L	0.76	HISS
450	SLD110553TW	TotalU	3/31/2009	107.4375	13.5156375	pCi/L	1.1	HISS
451	SLD110554TW	Gross Alpha of TSS Filtrate	4/13/2009	28.7	7.669	pCi/L	7.633	HISS
451	SLD110554TW	Gross Beta of TSS Filtrate	4/13/2009	-2.014	7.672	pCi/L	13.27	HISS
451	SLD110554TW	GrossA	4/13/2009	42.78	9.298	pCi/L	7.633	HISS
451	SLD110554TW	GrossB	4/13/2009	26.36	9.081	pCi/L	13.27	HISS
451	SLD110554TW	pH	4/13/2009	7.65		pH units	0.1	HISS
451	SLD110554TW	RA-226	4/13/2009	0.6996	0.4762	pCi/L	0.5149	HISS
451	SLD110554TW	TH-228	4/13/2009	0.1708	0	pCi/L	0.1708	HISS
451	SLD110554TW	TH-230	4/13/2009	1.041	0.5497	pCi/L	0.3784	HISS
451	SLD110554TW	TH-232	4/13/2009	0.06297	0.1263	pCi/L	0.1707	HISS
451	SLD110554TW	Total Suspended Solids	4/13/2009	97.5		mg/L	0.76	HISS
451	SLD110554TW	TotalU	4/13/2009	28.88068	2.633918016	pCi/L	1.1	HISS
452	SLD110555TW	Gross Alpha of TSS Filtrate	4/20/2009	37.64	8.938	pCi/L	8.396	HISS
452	SLD110555TW	Gross Beta of TSS Filtrate	4/20/2009	14.46	6.96	pCi/L	10.5	HISS
452	SLD110555TW	GrossA	4/20/2009	32.49	8.359	pCi/L	8.396	HISS
452	SLD110555TW	GrossB	4/20/2009	29.66	7.894	pCi/L	10.5	HISS
452	SLD110555TW	pH	4/20/2009	7.4		pH units	0.1	HISS
452	SLD110555TW	RA-226	4/20/2009	0.9317	0.5731	pCi/L	0.5715	HISS
452	SLD110555TW	TH-228	4/20/2009	0.09147	0.1835	pCi/L	0.3658	HISS
452	SLD110555TW	TH-230	4/20/2009	1.862	0.7579	pCi/L	0.5132	HISS
452	SLD110556TW	TH-232	4/20/2009	0.03047	0.1364	pCi/L	0.3656	HISS
452	SLD110555TW	Total Suspended Solids	4/20/2009	75.6		mg/L	0.76	HISS
452	SLD110555TW	TotalU	4/20/2009	34.29568	3.127766016	pCi/L	1.1	HISS
452	SLD110556TW	Gross Alpha of TSS Filtrate	4/23/2009	80.69	13.63	pCi/L	7.748	HISS
452	SLD110556TW	Gross Beta of TSS Filtrate	4/23/2009	8.238	7.109	pCi/L	11.44	HISS
452	SLD110556TW	GrossA	4/23/2009	72.57	12.71	pCi/L	7.748	HISS
452	SLD110556TW	GrossB	4/23/2009	31.85	8.468	pCi/L	11.44	HISS
452	SLD110556TW	pH	4/23/2009	7.19		pH units	0.1	HISS
452	SLD110556TW	RA-226	4/23/2009	0.8791	0.5325	pCi/L	0.2166	HISS
452	SLD110556TW	TH-228	4/23/2009	0.2462	0.2913	pCi/L	0.453	HISS
452	SLD110556TW	TH-230	4/23/2009	2.28	0.8318	pCi/L	0.167	HISS
452	SLD110556TW	TH-232	4/23/2009	0.5537	0.3793	pCi/L	0.1667	HISS
452	SLD110556TW	Total Suspended Solids	4/23/2009	58.333333		mg/L	0.76	HISS
452	SLD110556TW	TotalU	4/23/2009	85.66914	10.77717781	pCi/L	1.1	HISS
452	SLD110557TW	Gross Alpha of TSS Filtrate	4/30/2009	56.86	10.74	pCi/L	6.905	HISS
452	SLD110557TW	Gross Beta of TSS Filtrate	4/30/2009	8.787	7.103	pCi/L	11.37	HISS
452	SLD110557TW	GrossA	4/30/2009	68.51	12.08	pCi/L	6.905	HISS
452	SLD110557TW	GrossB	4/30/2009	44.48	9.185	pCi/L	11.37	HISS
452	SLD110557TW	pH	4/30/2009	6.8		pH units	0.1	HISS
452	SLD110557TW	RA-226	4/30/2009	1.097	0.5943	pCi/L	0.4538	HISS
452	SLD110557TW	TH-228	4/30/2009	0.4176	0.3478	pCi/L	0.1886	HISS
452	SLD110557TW	TH-230	4/30/2009	1.672	0.7555	pCi/L	0.5129	HISS
452	SLD110557TW	TH-232	4/30/2009	0.3478	0.3163	pCi/L	0.1885	HISS
452	SLD110557TW	Total Suspended Solids	4/30/2009	53.5		mg/L	0.76	HISS
452	SLD110557TW	TotalU	4/30/2009	83.93338	10.5588192	pCi/L	1.1	HISS
453	SLD110558TW	Gross Alpha of TSS Filtrate	5/11/2009	15.16	6.261	pCi/L	8.079	HISS
453	SLD110558TW	Gross Beta of TSS Filtrate	5/11/2009	5.858	7.052	pCi/L	11.57	HISS
453	SLD110558TW	GrossA	5/11/2009	17.33	6.512	pCi/L	8.079	HISS
453	SLD110558TW	GrossB	5/11/2009	5.675	7.042	pCi/L	11.57	HISS
453	SLD110558TW	pH	5/11/2009	6.82		pH units	0.1	HISS
453	SLD110558TW	RA-226	5/11/2009	0.7889	0.501	pCi/L	0.2138	HISS
453	SLD110558TW	TH-228	5/11/2009	0.4417	0.368	pCi/L	0.1995	HISS
453	SLD110558TW	TH-230	5/11/2009	0.3317	0.3422	pCi/L	0.4421	HISS
453	SLD110558TW	TH-232	5/11/2009	0.07358	0.1477	pCi/L	0.1994	HISS
453	SLD110558TW	Total Suspended Solids	5/11/2009	5.9		mg/L	0.76	HISS

453	SLD110558TW	TotalU	SLDS MSD 2Q[illegible]	20.07539	1.830875568	pCi/L	1.1	HISS
453	SLD110559TW	GrossA	5/14/2009	31.68	7.906	pCi/L	7.279	HISS
453	SLD110559TW	GrossB	5/14/2009	14.28	7.647	pCi/L	11.79	HISS
453	SLD110559TW	Gross Alpha of TSS Filtrate	5/14/2009	36.56	8.477	pCi/L	7.279	HISS
453	SLD110559TW	Gross Beta of TSS Filtrate	5/14/2009	10.25	7.424	pCi/L	11.79	HISS
453	SLD110559TW	pH	5/14/2009	6.88		pH units	0.1	HISS
453	SLD110559TW	RA-226	5/14/2009	1.294	0.6565	pCi/L	0.4703	HISS
453	SLD110559TW	TH-228	5/14/2009	0.4849	0.375	pCi/L	0.1877	HISS
453	SLD110559TW	TH-230	5/14/2009	1.699	0.7501	pCi/L	0.416	HISS
453	SLD110559TW	TH-232	5/14/2009	0.1731	0.2512	pCi/L	0.4152	HISS
453	SLD110559TW	Total Suspended Solids	5/14/2009	44.6		mg/L	0.76	HISS
453	SLD110559TW	TotalU	5/14/2009	38.09747	3.474489264	pCi/L	1.1	HISS
453	SLD110560TW	Gross Alpha of TSS Filtrate	5/26/2009	24.1	7.069	pCi/L	7.517	HISS
453	SLD110560TW	Gross Beta of TSS Filtrate	5/26/2009	5.492	6.8	pCi/L	11.17	HISS
453	SLD110560TW	GrossA	5/26/2009	19.77	6.575	pCi/L	7.517	HISS
453	SLD110560TW	GrossB	5/26/2009	9.336	7.02	pCi/L	11.17	HISS
453	SLD110560TW	pH	5/26/2009	7.03		pH units	0.1	HISS
453	SLD110560TW	RA-226	5/26/2009	0.6656	0.4808	pCi/L	0.5443	HISS
453	SLD110560TW	TH-228	5/26/2009	0.4418	0.4095	pCi/L	0.542	HISS
453	SLD110560TW	TH-230	5/26/2009	0.9565	0.6095	pCi/L	0.6846	HISS
453	SLD110560TW	TH-232	5/26/2009	0.1472	0.2095	pCi/L	0.1994	HISS
453	SLD110560TW	Total Suspended Solids	5/26/2009	6.6		mg/L	0.76	HISS
453	SLD110560TW	TotalU	5/26/2009	22.40988	2.043781056	pCi/L	1.1	HISS
453	SLD110561TW	Gross Alpha of TSS Filtrate	5/28/2009	5.145	5.254	pCi/L	8.396	HISS
453	SLD110561TW	Gross Beta of TSS Filtrate	5/28/2009	-3.476	6.96	pCi/L	12.24	HISS
453	SLD110561TW	GrossA	5/28/2009	10.83	5.906	pCi/L	8.396	HISS
453	SLD110561TW	GrossB	5/28/2009	6.773	7.489	pCi/L	12.24	HISS
453	SLD110561TW	pH	5/28/2009	7.15		pH units	0.1	HISS
453	SLD110561TW	RA-226	5/28/2009	0.9844	0.707	pCi/L	0.9633	HISS
453	SLD110561TW	TH-228	5/28/2009	0.3774	0.3896	pCi/L	0.5556	HISS
453	SLD110561TW	TH-230	5/28/2009	1.398	0.7243	pCi/L	0.6351	HISS
453	SLD110561TW	TH-232	5/28/2009	0.2263	0.2638	pCi/L	0.2044	HISS
453	SLD110561TW	Total Suspended Solids	5/28/2009	26.4		mg/L	0.76	HISS
453	SLD110561TW	TotalU	5/28/2009	9.259713	0.844465826	pCi/L	1.1	HISS
454	SLD110562TW	Gross Alpha of TSS Filtrate	6/3/2009	37.1	8.744	pCi/L	7.97	HISS
454	SLD110562TW	Gross Beta of TSS Filtrate	6/3/2009	5.126	6.779	pCi/L	11.17	HISS
454	SLD110562TW	GrossA	6/3/2009	36.58	8.662	pCi/L	7.97	HISS
454	SLD110562TW	GrossB	6/3/2009	32.77	8.395	pCi/L	11.17	HISS
454	SLD110562TW	pH	6/3/2009	7.42		pH units	0.1	HISS
454	SLD110562TW	RA-226	6/3/2009	1.062	0.6536	pCi/L	0.6353	HISS
454	SLD110562TW	TH-228	6/3/2009	0.1604	0.2326	pCi/L	0.3846	HISS
454	SLD110562TW	TH-230	6/3/2009	1.381	0.6422	pCi/L	0.3853	HISS
454	SLD110562TW	TH-232	6/3/2009	0.4168	0.3512	pCi/L	0.3846	HISS
454	SLD110562TW	Total Suspended Solids	6/3/2009	50.4		mg/L	0.76	HISS
454	SLD110562TW	TotalU	6/3/2009	47.44403	4.326895536	pCi/L	1.1	HISS
454	SLD110563TW	Gross Alpha of TSS Filtrate	6/10/2009	37.1	8.609	pCi/L	7.517	HISS
454	SLD110563TW	Gross Beta of TSS Filtrate	6/10/2009	10.8	7.067	pCi/L	11.1	HISS
454	SLD110563TW	GrossA	6/10/2009	27.08	7.44	pCi/L	7.517	HISS
454	SLD110563TW	GrossB	6/10/2009	15.19	7.323	pCi/L	11.1	HISS
454	SLD110563TW	pH	6/10/2009	6.92		pH units	0.1	HISS
454	SLD110563TW	RA-226	6/10/2009	0.8408	0.5339	pCi/L	0.2278	HISS
454	SLD110563TW	TH-228	6/10/2009	0.2077	0.2988	pCi/L	0.4847	HISS
454	SLD110563TW	TH-230	6/10/2009	0.9045	0.6654	pCi/L	0.2228	HISS
454	SLD110563TW	TH-232	6/10/2009	0.08208	0.1647	pCi/L	0.2224	HISS
454	SLD110563TW	Total Suspended Solids	6/10/2009	1.98		mg/L	0.76	HISS
454	SLD110563TW	TotalU	6/10/2009	36.72193	3.349040016	pCi/L	1.1	HISS
454	SLD110564TW	Gross Alpha of TSS Filtrate	6/11/2009	4.874	5.334	pCi/L	8.601	HISS
454	SLD110564TW	Gross Beta of TSS Filtrate	6/11/2009	1.648	7.332	pCi/L	12.42	HISS
454	SLD110564TW	GrossA	6/11/2009	7.04	5.578	pCi/L	8.601	HISS
454	SLD110564TW	GrossB	6/11/2009	-0.9153	7.203	pCi/L	12.42	HISS
454	SLD110564TW	pH	6/11/2009	7.02		pH units	0.1	HISS
454	SLD110564TW	RA-226	6/11/2009	0.654	0.4424	pCi/L	0.4129	HISS
454	SLD110564TW	TH-228	6/11/2009	0.3772	0.3835	pCi/L	0.5389	HISS
454	SLD110564TW	TH-230	6/11/2009	0.6721	0.4609	pCi/L	0.2024	HISS
454	SLD110564TW	TH-232	6/11/2009	0.07455	0.1496	pCi/L	0.202	HISS
454	SLD110564TW	Total Suspended Solids	6/11/2009	0.72		mg/L	0.76	HISS

454	SLD110564TW	TotalU SLDS MSD 2Q[illegible]	[illegible]/2009	2.5774[illegible]	0.235059336	pCi/L	1.1	HISS
454	SLD110565TW	Gross Alpha of TSS Filtrate	6/15/2009	34.12	8.299	pCi/L	7.633	HISS
454	SLD110565TW	Gross Beta of TSS Filtrate	6/15/2009	3.844	6.903	pCi/L	11.5	HISS
454	SLD110565TW	GrossA	6/15/2009	41.16	9.111	pCi/L	7.633	HISS
454	SLD110565TW	GrossB	6/15/2009	80.73	11.43	pCi/L	11.5	HISS
454	SLD110565TW	pH	6/15/2009	7.93		pH units	0.1	HISS
454	SLD110565TW	RA-226	6/15/2009	1.157	0.5653	pCi/L	0.1845	HISS
454	SLD110565TW	TH-228	6/15/2009	0.3803	0.3483	pCi/L	0.4059	HISS
454	SLD110565TW	TH-230	6/15/2009	2.548	0.928	pCi/L	0.1866	HISS
454	SLD110565TW	TH-232	6/15/2009	0.1051	0.2056	pCi/L	0.4056	HISS
454	SLD110565TW	Total Suspended Solids	6/15/2009	85.8		mg/L	0.76	HISS
454	SLD110565TW	TotalU	6/15/2009	36.56161	3.334416832	pCi/L	1.1	HISS
454	SLD110566TW	Gross Alpha of TSS Filtrate	6/16/2009	74.19	12.96	pCi/L	8.079	HISS
454	SLD110566TW	Gross Beta of TSS Filtrate	6/16/2009	13	7.751	pCi/L	12.11	HISS
454	SLD110566TW	GrossA	6/16/2009	92.07	14.96	pCi/L	8.079	HISS
454	SLD110566TW	GrossB	6/16/2009	199	18.91	pCi/L	12.11	HISS
454	SLD110566TW	pH	6/16/2009	7.94		pH units	0.1	HISS
454	SLD110566TW	RA-226	6/16/2009	1.751	0.7305	pCi/L	0.5772	HISS
454	SLD110566TW	TH-228	6/16/2009	0.7923	0.4971	pCi/L	0.4745	HISS
454	SLD110566TW	TH-230	6/16/2009	5.986	1.559	pCi/L	0.1783	HISS
454	SLD110566TW	TH-232	6/16/2009	0.394	0.3274	pCi/L	0.178	HISS
454	SLD110566TW	Total Suspended Solids	6/16/2009	240		mg/L	0.76	HISS
454	SLD110566TW	TotalU	6/16/2009	117.942	14.8371036	pCi/L	1.1	HISS

SR
7-27

COVIDIEN

Mallinckrodt

July 23, 2009

Mr. Doug Mendoza
Metropolitan St. Louis Sewer District
Department of Environmental Compliance
10 East Grand Avenue
St. Louis, MO 63147

Re: 2009 2nd Quarter Self-Monitoring Report for Permit No. 21120596-2.1

Dear Mr. Mendoza,

Please find enclosed the 2009 2nd Quarter Self Monitoring report for Mallinckrodt Inc.

The following sample points received no pharmaceutical process water flow during the first quarter: SP918, SP932 and SP935.

On April 21, 2009, a follow-up letter was submitted to MSD which detailed an unplanned release of 390 gallons of a 30% ethylene glycol and water solution from Building 250 that occurred on April 14, 2009. The total release of ethylene glycol was 1074 pounds.

On April 27, 2009, a follow-up letter was submitted to MSD which detailed a missed permit required wastewater sampling event and continuous pH monitoring as a result of an overflow of wastewater from Sample Point 011 on April 21, 2009 during a half day planned electric shutdown. Overflow of wastewater also occurred at Sample Point 008 which was sampled and monitored as required and is reported in the attached. The main outfall SP010 was also continuously monitored for pH as required and is also reported in the attached.

On June 9, 2009 a notification was submitted to MSD describing a planned maintenance activity in the imaging drug production process in Building 505 to investigate wastewater generation as a result of production. This activity was performed from June 10-12 and resulted in approximately 65 gallons per minute of wastewater to be discharged directly to plant sewers.

RECEIVED
JUL 24 2009
DIVISION OF
ENVIRONMENTAL COMPLIANCE

COVIDIEN/MALLINCKRODT
3600 NORTH SECOND STREET
ST. LOUIS, MO 63147

TELEPHONE: 314-654-2000
FAX: 314-654-1251

COVIDIEN

bypassing the Building's 504 pH adjust system. This activity had no adverse affect in the plant's main outfall discharge.

Per our recent phone conversation regarding our permits' Special Certification and Reporting Requirements C.6., Certification of No Cyanide under 439, the plant has one drum of Cyanogen Bromide on site. This material is currently being stored in a raw material refrigerated storage area. The material is scheduled to be used in a pharmaceutical process later this summer for a limited time. A Special Discharge request is currently being drafted for the process. As we discussed, any wastewater generated from this process will be sampled for cyanide prior to the discharge to the plant's PEG treatment system.

If you have any questions or require more detailed information, please contact me at 314.654.3374.

Sincerely,

Lisa Meyer
Senior HSE Engineer

ENCLOSURES

RECEIVED
JUL 24 2009
DIVISION OF
ENVIRONMENTAL COMPLIANCE

COVIDIEN/MALLINCKRODT
3600 NORTH SECOND STREET
ST. LOUIS, MO 63147

TELEPHONE: 314-654-2000
FAX: 314-654-1251

METROPOLITAN ST. LOUIS SEWER DISTRICT
INDUSTRIAL USER RADIOACTIVE MATERIALS DISCHARGE REPORT

PART I: IDENTIFYING INFORMATION

Company Name: Mallinckrodt - Covidien

Permit No: 21120596-00

Premise Address: 3600 N Second St. St. Louis, MO 63147

Reporting Period: ☐(JAN-MAR) ☐(APR-JUNE) ☐(JULY-SEPT) ☐(OCT-DEC)

PART II: RECORD OF DISPOSAL OF RADIOACTIVE MATERIALS TO THE SEWER SYSTEM

RADIONUCLIDE	ACTIVITY DISCHARGED (millicuries)
TOTAL ACTIVITY DISCHARGED:	0

PART III: CERTIFICATION STATEMENTS

Place your initials in the box under item A.
Everyone must complete the information under items A & B and sign this report.

(A.) CERTIFICATION OF COMPLIANCE WITH STATE AND FEDERAL REGULATIONS

Rap

I certify that to the best of my knowledge & belief, all requirements of 10 CFR Part 20.2003 and 19 CSR Part 20-10.090 governing disposal by release into sanitary sewage for material regulated by the Nuclear Regulatory Commission and the Missouri Department of Health, respectively, have been met for the period covered by this report.

B. RADIOACTIVE MATERIALS DISCHARGE REPORT CERTIFICATION

I certify under penalty of Law that this document and all attachments were prepared under my direction or supervision in accordance with a system designed to assure that qualified personnel properly gather and evaluate the information submitted. Based on my inquiry of the person or persons who manage the system, or those persons directly responsible for gathering the information, the information submitted is, to the best of my knowledge and belief, true, accurate and complete. I am aware that there are significant penalties for submitting false information, including the possibility of fine and imprisonment for knowing violations.

RECEIVED
JUL 24 2009
DIVISION OF
ENVIRONMENTAL COMPLIANCE

Print/type name of signing official: Richard C. Proehl

Title: Site Director Telephone: 314-[illegible]16.

Signature: Richard C Proehl Date: 07/23/09

radrpt.doc 2/00

MSD 012203

INDUSTRIAL USER SELF MONITORING REPORT PAGE 2

PART III: SPECIAL CERTIFICATION STATEMENTS

Based on the special conditions contained in your discharge permit you may be required to certify the following.
Please review your permit and **PLACE YOUR INITIALS ON THE LINES NEXT TO THE CERTIFICATIONS**.

(A)	NO CHANGE IN WASTEWATER DISCHARGE AT SAMPLE POINTS WITH NO MONITORING REQUIRED For permit special conditions that waive monitoring at any sample point(s) specified in your permit, you are required to make the following certification for each report in which monitoring is waived: RCP I certify, since the last discharge monitoring report, there has been no change in the character of the wastes discharged at sample point(s) _____
(B)	NO CHANGE IN WASTEWATER DISCHARGE AT ACTIVE CONNECTIONS WITHOUT SAMPLE POINTS For permit special conditions that waive monitoring at active connection points which are not specified as sample points in your permit, you are required to make the following certification: RCP I certify, since the last discharge monitoring report, there has been no change in the character of wastes discharged at those active connection points which are not specified in my permit.
D	GRAB IN LIEU OF COMPOSITE REPRESENTS WASTEWATER DISCHARGE For permit special conditions that authorize grab sample collection in lieu of composite sampling at any sample point(s), you are required to make the following certification for each report in which such authorized grab samples occur: _____ I certify the grab sample results in this report accurately represent our average daily discharge at sample point(s)_____.
(E)	NO DISCHARGE OF CATEGORICAL WASTE For permit special conditions that prohibit discharge of wastes which are subject to certain categorical pretreatment standards, you are required to make the following certification: RCP I certify, since the last discharge monitoring report, there has been no discharge of wastes which are subject to pretreatment standards in 40 CFR 414 except for wastewater/wastes conveyed by SP905.
(F)	CYANIDE NOT USED OR GENERATED IN 40 CFR 439 OPERATIONS Discharges subject to Pharmaceutical Categorical Standards (40 CFR 439) can be exempted from limitations and monitoring for Total Cyanide at the Pharmaceutical sample point(s) _____ subject to the following certification: RCP I certify, since the last discharge monitoring report, cyanide has not been used or generated in any pharmaceutical manufacturing process subject to Categorical Standards in 40 CFR 439. * Except for Cyanogen bromide currently stored in a raw material refrigerated storage area.
H	PHARMACEUTICAL POLLUTANTS NOT USED OR GENERATED IN 40 CFR 439 OPERATIONS Discharges subject to Pharmaceutical Categorical Standards (40 CFR 439) can be exempted from monitoring for certain 40 CFR 439-regulated pollutants at the Pharmaceutical sample point(s) _____ subject to the following certification: _____ I certify, since the last discharge monitoring report, the 40 CFR 439-regulated pollutants, as determined in permittee's report dated _____ have not been used or generated in any pharmaceutical manufacturing process subject to Categorical Standards in 40 CFR 439. In addition, the above-referenced report remains valid.
I	SURROGATE MONITORING ALLOWED FOR 40 CFR 439 OPERATIONS Discharges subject to Pharmaceutical Categorical Standards (40 CFR 439) can be exempted from monitoring for certain 40 CFR 439-regulated pollutants, and replaced by monitoring for surrogate pollutant(s), at the Pharmaceutical sample point(s) _____ subject to the following certification: _____ I certify, since the last discharge monitoring report, the 40 CFR 439-regulated pollutants, as determined in permittee's report dated _____ continue to receive the same degree of treatment as the surrogate pollutant(s). In addition, the above-referenced report remains valid.

PART IV: GENERAL CERTIFICATION STATEMENTS

B	DISCHARGE MONITORING REPORT CERTIFICATION **All permittees must sign and complete the information below:** I certify under penalty of Law that this document and all attachments were prepared under my direction or supervision in accordance with a system designed to assure that qualified personnel properly gather and evaluate the information submitted. Based on my inquiry of the person or persons who manage the system, or those persons directly responsible for gathering the information, the information submitted is, to the best of my knowledge and belief, true, accurate, and complete. I am aware that there are significant penalties for submitting false information, including the possibility of fine and imprisonment for knowing violations. Print or type name of signing official: Richard C. Proehl Title: Site Director Telephone: 314.654.5816 Signature: Richard C Proehl Date: 07/23/09

RECEIVED
JUL 24 2009
DIVISION OF
ENVIRONMENTAL COMPLIANCE

MSD 012204

METROPOLITAN ST. LOUIS SEWER DISTRICT
2009 INDUSTRIAL USER SELF MONITORING REPORT

PLEASE READ THE INSTRUCTIONS BEFORE COMPLETING THIS REPORT

PART I: IDENTIFYING INFORMATION

Company Name: Mallinckrodt Inc.

Permit No.: 2112059600 - 2.1

Premise Address: 3600 North Second St., St. Louis, MO 63147

Monitoring Period: _____(JAN-MAR) __X__(APR-JUNE) ____(JULY-SEPT) _____(OCT-DEC)

Samples Collected By: Mallinckrodt Inc

Analysis Performed By: _____

Part II: ANALYTICAL RESULTS OF SELF MONITORING

MSD SAMPLE POINT REFERENCE NUMBERS	----->		001						
DATES ON WHICH SAMPLES WERE COLLECTED	----->		NA						
TIMES AT WHICH SAMPLES WERE COLLECTED	----->								
PARAMETER	LIMIT	RECORD SAMPLE TYPES (G,C,M OR E) & RESULTS BELOW G=grab,C=composite,M=measured flow,E=estimated flow							UNITS
FLOW		E	1,000						gal/day
NO MONITORING REQUIRED (Sanitary Only)									
There have been no change in the character of the wastes discharged since the last report.									

RECEIVED

JUL 24 2009

DIVISION OF
ENVIRONMENTAL COMPLIANCE

METROPOLITAN ST. LOUIS SEWER DISTRICT
2009 INDUSTRIAL USER SELF MONITORING REPORT

PLEASE READ THE INSTRUCTIONS BEFORE COMPLETING THIS REPORT

PART I: IDENTIFYING INFORMATION

Company Name: Mallinckrodt Inc.

Permit No.: 2112059600 - 2.1

Premise Address: 3600 North Second St., St. Louis, MO 63147

Monitoring Period: ____(JAN-MAR) __X__(APR-JUNE) ____(JULY-SEPT) ____(OCT-DEC)

Samples Collected By: Mallinckrodt Inc

Analysis Performed By:

Part II: ANALYTICAL RESULTS OF SELF MONITORING

MSD SAMPLE POINT REFERENCE NUMBERS	----->		002					
DATES ON WHICH SAMPLES WERE COLLECTED	---->		NA					
TIMES AT WHICH SAMPLES WERE COLLECTED	---->							
PARAMETER	LIMIT	RECORD SAMPLE TYPES (G,C,M OR E) & RESULTS BELOW G=grab,C=composite,M=measured flow,E=estimated flow						UNITS
FLOW		E	2,200					gal/day
NO MONITORING REQUIRED (Sanitary Only)								
There have been no change in the character of the wastes discharged since the last report.								

RECEIVED
JUL 24 2009
DIVISION OF
ENVIRONMENTAL COMPLIANCE

METROPOLITAN ST. LOUIS SEWER DISTRICT
2009 INDUSTRIAL USER SELF MONITORING REPORT

PLEASE READ THE INSTRUCTIONS BEFORE COMPLETING THIS REPORT

PART I: IDENTIFYING INFORMATION

Company Name: Mallinckrodt Inc.

Permit No.: 2112059600 - 2.1

Premise Address: 3600 North Second St., St. Louis, MO 63147

Monitoring Period: ____(JAN-MAR) __X__(APR-JUNE) ____(JULY-SEPT) _____(OCT-DEC)

Samples Collected By: Mallinckrodt

Analysis Performed By: TEKLAB

Part II: ANALYTICAL RESULTS OF SELF MONITORING

MSD SAMPLE POINT REFERENCE NUMBERS	----->	003		009		099		
DATES ON WHICH SAMPLES WERE COLLECTED	----->	4/17/2009		4/17/2009		calculated		
TIMES AT WHICH SAMPLES WERE COLLECTED	----->	07:20, 08:25, 09:25, 10:25		07:40, 08:45, 9:50, 10:50		n/a		
		RECORD SAMPLE TYPES (G,C,M OR E) & RESULTS BELOW G=grab,C=composite,M=measured flow,E=estimated flow						
PARAMETER	LIMIT							UNITS
FLOW		M	25,834	M	16,762	E	9,072	gal/day
Oil & Grease	200	G	16	G	3	E	40	mg/l
Biochemical Oxygen Demand	****	C	147	C	328	E	0*	mg/l
Chemical Oxygen Demand	****	C	298	C	350	E	202	mg/l
Total Suspended Solids	****	C	101	C	184	E	0*	mg/l
Temperature	60	G	23	G	17	E	~~20~~	deg C
pH	5.5 - 11.5	G	7.4	G	7.7	E	~~7.5~~	S.U.
Lab Dilution Factor			1		1			

RECEIVED
JUL 24 2009
DIVISION OF
ENVIRONMENTAL COMPLIANCE

METROPOLITAN ST. LOUIS SEWER DISTRICT
2009 INDUSTRIAL USER SELF MONITORING REPORT

PLEASE READ THE INSTRUCTIONS BEFORE COMPLETING THIS REPORT

PART I: IDENTIFYING INFORMATION

Company Name: Mallinckrodt Inc.

Permit No.: 2112059600 - 2.1

Premise Address: 3600 North Second St., St. Louis, MO 63147

Monitoring Period: _____(JAN-MAR) __X__(APR-JUNE) ____(JULY-SEPT) ____(OCT-DEC)

Samples Collected By: Mallinckrodt

Analysis Performed By: TEKLAB

Part II: ANALYTICAL RESULTS OF SELF MONITORING

MSD SAMPLE POINT REFERENCE NUMBERS	----->		005						
DATES ON WHICH SAMPLES WERE COLLECTED	----->		4/17/2009						
TIMES AT WHICH SAMPLES WERE COLLECTED	----->		07:30, 8:35, 09:40, 10:40						
PARAMETER	LIMIT	RECORD SAMPLE TYPES (G,C,M OR E) & RESULTS BELOW G=grab,C=composite,M=measured flow,E=estimated flow							UNITS
FLOW		E	32,000						gal/day
Oil & Grease	200	G	<5						mg/l
Biochemical Oxygen Demand	****	C	23						mg/l
Chemical Oxygen Demand	****	C	50						mg/l
Total Suspended Solids	****	C	<6						mg/l
Temperature	60	G	23						deg C
pH	5.5 - 11.5	G	7.7						S.U.
Lab Dilution Factor			1						

RECEIVED

JUL 24 2009

DIVISION OF
ENVIRONMENTAL COMPLIANCE

METROPOLITAN ST. LOUIS SEWER DISTRICT
2009 INDUSTRIAL USER SELF MONITORING REPORT

PLEASE READ THE INSTRUCTIONS BEFORE COMPLETING THIS REPORT

PART I: IDENTIFYING INFORMATION

Company Name: Mallinckrodt Inc.

Permit No.: 2112059600 - 2.1

Premise Address: 3600 North Second St., St. Louis, MO 63147

Monitoring Period: ____(JAN-MAR) __X__(APR-JUNE) ____(JULY-SEPT) ____(OCT-DEC)

Samples Collected By: Mallinckrodt

Analysis Performed By: TEKLAB

Part II: ANALYTICAL RESULTS OF SELF MONITORING

√

MSD SAMPLE POINT REFERENCE NUMBERS	---->		008					
DATES ON WHICH SAMPLES WERE COLLECTED	---->		4/21/2009					
TIMES AT WHICH SAMPLES WERE COLLECTED	---->		7:47					
PARAMETER	LIMIT	RECORD SAMPLE TYPES (G,C,M OR E) & RESULTS BELOW G=grab,C=composite,M=measured flow,E=estimated flow						UNITS
FLOW		E	130,000					gal/day
Oil & Grease	200	G	12					mg/l
Biochemical Oxygen Demand	****	G	89					mg/l
Chemical Oxygen Demand	****	G	99					mg/l
Temperature	60	G	25					deg C
Total Suspended Solids	****		26					mg/L
pH	5.5 - 11.5	G	9.3					S.U.
Lab Dilution Factor			1					

RECEIVED

JUL 24 2009

DIVISION OF
ENVIRONMENTAL COMPLIANCE

METROPOLITAN ST. LOUIS SEWER DISTRICT
2009 INDUSTRIAL USER SELF MONITORING REPORT

PLEASE READ THE INSTRUCTIONS BEFORE COMPLETING THIS REPORT

PART I: IDENTIFYING INFORMATION

Company Name: Mallinckrodt Inc.

Permit No.: 2112059600 - 2.1

Premise Address: 3600 North Second St., St. Louis, MO 63147

Monitoring Period: ____(JAN-MAR) __X__(APR-JUNE) ___(JULY-SEPT) ____(OCT-DEC)

Samples Collected By: Mallinckrodt

Analysis Performed By: TEKLAB

Part II: ANALYTICAL RESULTS OF SELF MONITORING

MSD SAMPLE POINT REFERENCE NUMBERS	---->		008					
DATES ON WHICH SAMPLES WERE COLLECTED	---->		4/21/2009					
TIMES AT WHICH SAMPLES WERE COLLECTED	---->		07:47					
PARAMETER	LIMIT	RECORD SAMPLE TYPES (G,C,M OR E) & RESULTS BELOW G=grab,C=composite,M=measured flow,E=estimated flow						UNITS
FLOW		E	130,000					gal/day
1,1,1-Trichloroethane		G	<0.005					mg/l
1,1,2,2-Tetrachloroethane		G	<0.005					mg/l
1,1,2-Trichloroethane		G	<0.005					mg/l
1,1-Dichloroethane		G	<0.005					mg/l
1,1-Dichloroethene		G	<0.005					mg/l
1,2-Dichlorobenzene		G	<0.005					mg/l
1,2-Dichloroethane		G	<0.005					mg/l
1,2-Dichloropropane		G	<0.005					mg/l
1,3-Dichlorobenzene		G	<0.005					mg/l
1,4-Dichlorobenzene		G	<0.005					mg/l
2-Chloroethylvinylether		G	<0.020					mg/l
Acrolein		G	<0.100					mg/l
Acrylonitrile		G	<0.005					mg/l
Benzene		G	<0.002					mg/l
Bromodichloromethane		G	0.0012					mg/l
Bromoform		G	<0.005					mg/l
Bromomethane		G	<0.010					mg/l
Carbon Tetrachloride		G	<0.005					mg/l
Chlorobenzene		G	<0.005					mg/l
Chloroethane		G	<0.010					mg/l
Chloroform		G	0.0162					mg/l
Chloromethane		G	<0.010					mg/l
cis-1,3-Dicholropropene		G	<0.005					mg/l
Dibromochloromethane		G	<0.005					mg/l
Ethylbenzene		G	<0.005					mg/l
Methylene Chloride		G	<0.005					mg/l
Tetrachloroethene		G	<0.005					mg/l
Toluene		G	<0.002					mg/l
1,2-Dichloroethene		G	<0.005					mg/l
trans-1,3-Dichloropropene		G	<0.005					mg/l
Trichloroethene		G	<0.005					mg/l
Vinyl Chloride		G	0.0009					mg/l
1,2,4-Trichlorobenzene		G	<0.009					mg/l
2,4,6-Trichlorophenol		G	<0.009					mg/l
2,4-Dichlorophenol		G	<0.009					mg/l
2,4-Dimethylphenol		G	<0.009					mg/l
2,4-Dinitrophenol		G	<0.018					mg/l
2,4-Dinitrotoluene		G	<0.009					mg/l
2,6-Dinitrotoluene		G	<0.009					mg/l
2-Chloronapthalene		G	<0.009					mg/l
2-Chlorophenol		G	<0.009					mg/l
2-Nitrophenol		G	<0.018					mg/l
3,3-Dichlorobenzidine		G	<0.009					mg/l
2-Methyl-4,6-dinitrophenol		G	<0.018					mg/l
4-Bromophenyl-phenylether		G	<0.009					mg/l
4-Chloro-3-methylphenol		G	<0.018					mg/l
4-Chlorophenyl-phenylether		G	<0.009					mg/l
4-Nitrophenol		G	<0.018					mg/l
Acenapthene		G	<0.009					mg/l
Acenaphthylene		G	<0.009					mg/l
Anthracene		G	<0.009					mg/l
Benzidine		G	<0.035					mg/l
Benzo(a)anthracene		G	<0.009					mg/l

RECEIVED
JUL 24 2009
DIVISION OF
ENVIRONMENTAL COMPLIANCE

METROPOLITAN ST. LOUIS SEWER DISTRICT
2009 INDUSTRIAL USER SELF MONITORING REPORT

PLEASE READ THE INSTRUCTIONS BEFORE COMPLETING THIS REPORT

PART I: IDENTIFYING INFORMATION

Company Name: Mallinckrodt Inc.

Permit No.: 2112059600 - 2.1

Premise Address: 3600 North Second St., St. Louis, MO 63147

Monitoring Period: ____(JAN-MAR) __X__(APR-JUNE) ___(JULY-SEPT) ____(OCT-DEC)

Samples Collected By: Mallinckrodt

Analysis Performed By: TEKLAB

Part II: ANALYTICAL RESULTS OF SELF MONITORING

MSD SAMPLE POINT REFERENCE NUMBERS	----->		008					
DATES ON WHICH SAMPLES WERE COLLECTED	----->		4/21/2009					
TIMES AT WHICH SAMPLES WERE COLLECTED	----->		07:47					
PARAMETER	LIMIT	RECORD SAMPLE TYPES (G,C,M OR E) & RESULTS BELOW G=grab,C=composite,M=measured flow,E=estimated flow						UNITS
FLOW		E	130,000					gal/day
Benzo(a)pyrene		G	<0.009					mg/l
Benzo(b)fluoranthene		G	<0.009					mg/l
Benzo(g,h,i)perylene		G	<0.009					mg/l
Benzo(k)fluoranthene		G	<0.009					mg/l
Bis(2-chloroethoxy)methane		G	<0.009					mg/l
Bis(2-chloroethyl)ether		G	<0.009					mg/l
Bis(2-chloroisopropyl)ether		G	<0.009					mg/l
Bis(2-ethylhexyl)phthalate		G	<0.005					mg/l
Butyl benzyl phthalate		G	<0.009					mg/l
Chrysene		G	<0.009					mg/l
Dibenzo(a,h)anthracene		G	<0.009					mg/l
Diethyl phthalate		G	<0.009					mg/l
Dimethyl phthalate		G	<0.009					mg/l
Di-n-butyl phthalate		G	<0.009					mg/l
Di-n-octyl-phthalate		G	<0.009					mg/l
Fluorene		G	<0.009					mg/l
Fluoranthene		G	<0.009					mg/l
Hexachlorobenzene		G	<0.009					mg/l
Hexachlorobutadiene		G	<0.009					mg/l
Hexachlorocyclopentadiene		G	<0.018					mg/l
Hexachloroethane		G	<0.009					mg/l
Ideno(1,2,3-cd)pyrene		G	<0.009					mg/l
Isophorone		G	<0.009					mg/l
Naphthalene		G	<0.009					mg/l
Nitrobenzene		G	<0.009					mg/l
N-nitrosodimethylamine		G	<0.018					mg/l
N-nitrosodi-n-propylamine		G	<0.009					mg/l
N-nitrosodiphenylamine		G	<0.009					mg/l
Pentachlorophenol		G	<0.018					mg/l
Phenanthrene		G	<0.009					mg/l
Phenol		G	<0.004					mg/l
Pyrene		G	<0.009					mg/l
1,2-Diphenylhydrazine		G	<0.009					mg/l
Total Toxic Organics	5.52	--	0.857					mg/l
Lab Dilution Factor			1					

RECEIVED
JUL 24 2009
DIVISION OF
ENVIRONMENTAL COMPLIANCE

MSD 012211

Mallinckrodt pH Monitoring Data for SP008: Power Outage Overflow April 21, 2009

Date	Time	pH
21-Apr-09	8:16:00	9.3
21-Apr-09	8:45:00	9.3
21-Apr-09	9:14:00	9.2
21-Apr-09	9:45:00	9.4
21-Apr-09	10:14:00	9.3
21-Apr-09	10:43:00	9.3

Mallinckrodt pH Monitoring Data for SP010: Power Outage Overflow April 21, 2009

Date	Time	pH
21-Apr-09	7:56:00	8.6
21-Apr-09	8:26:00	8.8
21-Apr-09	8:55:00	8.7
21-Apr-09	9:24:00	8.4
21-Apr-09	9:54:00	8.6
21-Apr-09	10:23:00	8.8
21-Apr-09	10:50:00	9.4

RECEIVED

JUL 24 2009

DIVISION OF
ENVIRONMENTAL COMPLIANCE

METROPOLITAN ST. LOUIS SEWER DISTRICT
2009 INDUSTRIAL USER SELF MONITORING REPORT

PLEASE READ THE INSTRUCTIONS BEFORE COMPLETING THIS REPORT

PART I: IDENTIFYING INFORMATION

Company Name: Mallinckrodt Inc.

Permit No.: 2112059600 -2.1

Premise Address: 3600 North Second St., St. Louis, MO 63147

Monitoring Period: ____(JAN-MAR) __X__(APR-JUNE) ____(JULY-SEPT) ____(OCT-DEC)

Samples Collected By: Mallinckrodt

Analysis Performed By: TEKLAB

Part II: ANALYTICAL RESULTS OF SELF MONITORING

MSD SAMPLE POINT REFERENCE NUMBERS	----->		010					
DATES ON WHICH SAMPLES WERE COLLECTED	----->		4/17/2009					
TIMES AT WHICH SAMPLES WERE COLLECTED	----->		07:55, 08:55, 10:00, 11:00					
PARAMETER	LIMIT	RECORD SAMPLE TYPES (G,C,M OR E) & RESULTS BELOW G=grab,C=composite,M=measured flow,E=estimated flow						UNITS
FLOW		E	1,860,482					gal/day
Oil & Grease	200	G	11					mg/l
Biochemical Oxygen Demand	****	C	651					mg/l
Chemical Oxygen Demand	****	C	1060					mg/l
Total Suspended Solids	****	C	108					mg/l
Temperature	60	G	31					deg C
pH	5.5 - 11.5	G	see attached					S.U.
Chromium	5	C	0.006					mg/l
Copper	2.7	C	0.013					mg/l
Nickel	2.3	C	0.012					mg/l
Zinc	3	C	0.042					mg/l
Lab Dilution Factor			1					

RECEIVED

JUL 24 2009

DIVISION OF
ENVIRONMENTAL COMPLIANCE

Mallinckrodt pH Monitoring for SP010: April, 2009 ✓

Date / Time	pH	Total for Event in Minutes
08-Apr-09 13:25:00	5.0	5
13-Apr-09 09:55:00	11.5	5
	April Total	10

Mallinckrodt pH Monitoring for SP010: May, 2009 ✓

Date / Time	pH	Total for Event in Minutes
01-May-09 10:35:00	3.9	
01-May-09 10:40:00	4.1	
01-May-09 10:45:00	4.3	
01-May-09 10:50:00	4.5	
01-May-09 10:55:00	4.6	
01-May-09 11:00:00	4.7	
01-May-09 11:05:00	4.8	
01-May-09 11:10:00	4.9	
01-May-09 11:15:00	4.9	
01-May-09 11:20:00	5.0	
01-May-09 11:25:00	5.1	50
07-May-09 19:50:00	3.4	
07-May-09 19:55:00	3.3	10
08-May-09 10:50:00	5.1	
08-May-09 10:55:00	4.1	10
14-May-09 13:05:00	4.2	
14-May-09 13:10:00	4.5	
14-May-09 13:15:00	4.8	15
15-May-09 06:55:00	4.2	5
22-May-09 13:05:00	12.9	5
31-May-09 00:00:00	11.7	5
	May Total:	100

Mallinckrodt pH Monitoring for SP010: June, 2009 ✓

Date / Time	pH	Total for Event in Minutes
05-Jun-09 11:10:00	4.0	5
11-Jun-09 11:15:00	4.0	5
19-Jun-09 08:35:00	4.7	5
19-Jun-09 08:45:00	11.6	
19-Jun-09 08:50:00	11.8	
19-Jun-09 08:55:00	11.7	15
	June Total:	30

RECEIVED
JUL 24 2009
DIVISION OF
ENVIRONMENTAL COMPLIANCE

METROPOLITAN ST. LOUIS SEWER DISTRICT
2009 INDUSTRIAL USER SELF MONITORING REPORT

PLEASE READ THE INSTRUCTIONS BEFORE COMPLETING THIS REPORT

PART I: IDENTIFYING INFORMATION

Company Name: Mallinckrodt Inc.

Permit No.: 2112059600 - 2.1

Premise Address: 3600 North Second St., St. Louis, MO 63147

Monitoring Period: ____(JAN-MAR) __X__(APR-JUNE) ____(JULY-SEPT) ____(OCT-DEC)

Samples Collected By: Mallinckrodt

Analysis Performed By: TEKLAB

Part II: ANALYTICAL RESULTS OF SELF MONITORING

MSD SAMPLE POINT REFERENCE NUMBERS	----->		011					
DATES ON WHICH SAMPLES WERE COLLECTED	----->							
TIMES AT WHICH SAMPLES WERE COLLECTED	----->							
PARAMETER	LIMIT	RECORD SAMPLE TYPES (G,C,M OR E) & RESULTS BELOW G=grab,C=composite,M=measured flow,E=estimated flow						UNITS
FLOW		E	*					gal/day
Oil & Grease	200	G						mg/l
Biochemical Oxygen Demand	****	C						mg/l
Chemical Oxygen Demand	****	C						mg/l
Total Suspended Solids	****	C						mg/l
Temperature	60	G						deg C
pH	5.5 - 11.5	G						S.U.
* Flow from this outfall occurred on 4/21/09, however samples were not collected. See detailed of this event in report cover letter.								
Lab Dilution Factor								

RECEIVED

JUL 24 2009

DIVISION OF
ENVIRONMENTAL COMPLIANCE

METROPOLITAN ST. LOUIS SEWER DISTRICT
2009 INDUSTRIAL USER SELF MONITORING REPORT

PLEASE READ THE INSTRUCTIONS BEFORE COMPLETING THIS REPORT

PART I: IDENTIFYING INFORMATION

Company Name: Mallinckrodt Inc.

Permit No.: 2112059600 - 2.1

Premise Address: 3600 North Second St., St. Louis, MO 63147

Monitoring Period: ____(JAN-MAR) __X__(APR-JUNE) ____ (JULY-SEPT) ___(OCT-DEC)

Samples Collected By: Mallinckrodt

Analysis Performed By: TEKLAB

Part II: ANALYTICAL RESULTS OF SELF MONITORING

MSD SAMPLE POINT REFERENCE NUMBERS ----->			080					
DATES ON WHICH SAMPLES WERE COLLECTED ----->			6/15/2009					
TIMES AT WHICH SAMPLES WERE COLLECTED ----->			10:00, 11:00, 12:00, 13:00					
PARAMETER	LIMIT	RECORD SAMPLE TYPES (G,C,M OR E) & RESULTS BELOW G=grab,C=composite,M=measured flow,E=es						UNITS
FLOW		E	3,500					gal/day
1,1,1-Trichloroethane		G	<0.005					mg/l
1,1,2,2-Tetrachloroethane		G	<0.005					mg/l
1,1,2-Trichloroethane		G	<0.005					mg/l
1,1-Dichloroethane		G	<0.005					mg/l
1,1-Dichloroethene		G	<0.005					mg/l
1,2-Dichlorobenzene		G	<0.005					mg/l
1,2-Dichloroethane		G	<0.005					mg/l
1,2-Dichloropropane		G	<0.005					mg/l
1,3-Dichlorobenzene		G	<0.005					mg/l
1,4-Dichlorobenzene		G	<0.005					mg/l
2-Chloroethylvinylether		G	<0.020					mg/l
Acrolein		G	<0.100					mg/l
Acrylonitrile		G	<0.005					mg/l
Benzene		G	<0.002					mg/l
Bromodichloromethane		G	0.0021					mg/l
Bromoform		G	<0.005					mg/l
Bromomethane		G	<0.010					mg/l
Carbon Tetrachloride		G	<0.005					mg/l
Chlorobenzene		G	<0.005					mg/l
Chloroethane		G	<0.010					mg/l
Chloroform*		G	<0.005					mg/l
Chloromethane		G	<0.010					mg/l
cis-1,3-Dicholropropene		G	<0.005					mg/l
Dibromochloromethane		G	<0.005					mg/l
Ethylbenzene		G	<0.005					mg/l
Methylene Chloride		G	<0.005					mg/l
Tetrachloroethene		G	<0.005					mg/l
Toluene		G	<0.002					mg/l
trans-1,2-Dichloroethene		G	<0.005					mg/l
trans-1,3-Dichloropropene		G	<0.005					mg/l
Trichloroethene		G	<0.005					mg/l
Vinyl Chloride		G	<0.002					mg/l
1,2,4-Trichlorobenzene		G	<0.046					mg/l
2,4,6-Trichlorophenol		G	<0.046					mg/l
2,4-Dichlorophenol		G	<0.046					mg/l
2,4-Dimethylphenol		G	<0.046					mg/l
2,4-Dinitrophenol		G	<0.092					mg/l
2,4-Dinitrotoluene		G	<0.046					mg/l
2,6-Dinitrotoluene		G	<0.046					mg/l
2-Chloronapthalene		G	<0.046					mg/l
2-Chlorophenol		G	<0.046					mg/l
2-Nitrophenol		G	<0.092					mg/l
3,3-Dichlorobenzidine		G	<0.046					mg/l
2-Methyl-4,6-dinitrophenol		G	<0.092					mg/l
4-Bromophenyl-phenylether		G	<0.046					mg/l

RECEIVED
JUL 24 2009
DIVISION OF
ENVIRONMENTAL COMPLIANCE

METROPOLITAN ST. LOUIS SEWER DISTRICT
2009 INDUSTRIAL USER SELF MONITORING REPORT

PLEASE READ THE INSTRUCTIONS BEFORE COMPLETING THIS REPORT

PART I: IDENTIFYING INFORMATION

Company Name: Mallinckrodt Inc.

Permit No.: 2112059600 - 2.1

Premise Address: 3600 North Second St., St. Louis, MO 63147

Monitoring Period: ____(JAN-MAR) __X__(APR-JUNE) ____ (JULY-SEPT) ___(OCT-DEC)

Samples Collected By: Mallinckrodt

Analysis Performed By: TEKLAB

Part II: ANALYTICAL RESULTS OF SELF MONITORING

MSD SAMPLE POINT REFERENCE NUMBERS ----->			080					
DATES ON WHICH SAMPLES WERE COLLECTED ----->			6/15/2009					
TIMES AT WHICH SAMPLES WERE COLLECTED ----->			10:00, 11:00, 12:00, 13:00					
PARAMETER	LIMIT	RECORD SAMPLE TYPES (G,C,M OR E) & RESULTS BELOW G=grab,C=composite,M=measured flow,E=es						UNITS
FLOW		E	3,500					gal/day
4-Chloro-3-methylphenol		G	<0.092					mg/l
4-Chlorophenyl-phenylether		G	<0.046					mg/l
4-Nitrophenol		G	<0.092					mg/l
Acenapthene		G	<0.046					mg/l
Acenaphthylene		G	<0.046					mg/l
Anthracene		G	<0.046					mg/l
Benzidine		G	<0.183					mg/l
Benzo(a)anthracene		G	<0.046					mg/l
Benzo(a)pyrene		G	<0.046					mg/l
Benzo(b)fluoranthene		G	<0.046					mg/l
Benzo(g,h,i)perylene		G	<0.046					mg/l
Benzo(k)fluoranthene		G	<0.046					mg/l
Bis(2-chloroethoxy)methane		G	<0.046					mg/l
Bis(2-chloroethyl)ether		G	<0.046					mg/l
Bis(2-chloroisopropyl)ether		G	<0.046					mg/l
Bis(2-ethylhexyl)phthalate		G	<0.028					mg/l
Butyl benzyl phthalate		G	<0.046					mg/l
Chrysene		G	<0.046					mg/l
Dibenzo(a,h)anthracene		G	<0.046					mg/l
Diethyl phthalate		G	<0.046					mg/l
Dimethyl phthalate		G	<0.046					mg/l
Di-n-butyl phthalate		G	<0.046					mg/l
Di-n-octyl-phthalate		G	<0.046					mg/l
Fluoranthene		G	<0.046					mg/l
Fluorene		G	<0.046					mg/l
Hexachlorobenzene		G	<0.046					mg/l
Hexachlorobutadiene		G	<0.046					mg/l
Hexachlorocyclopentadiene		G	<0.092					mg/l
Hexachloroethane		G	<0.046					mg/l
Ideno(1,2,3-cd)pyrene		G	<0.046					mg/l
Isophorone		G	<0.046					mg/l
Naphthalene		G	<0.046					mg/l
Nitrobenzene		G	<0.046					mg/l
N-nitrosodimethylamine		G	<0.092					mg/l
N-nitrosodi-n-propylamine		G	<0.046					mg/l
N-nitrosodiphenylamine		G	<0.046					mg/l
Pentachlorophenol		G	<0.092					mg/l
Phenanthrene		G	<0.046					mg/l
Phenol		G	<0.023					mg/l
Pyrene		G	<0.046					mg/l
1,2-Diphenylhydrazine		G	<0.046					mg/l
Total Toxic Organics	5.52	--	3.221					mg/l
* Raw Water chloroform: 0.012 mg/l								
SP080 chloroform 0.011 mg/l therefore, reported								
chloroform as <0.005 mg/l.								
Lab Dilution Factor			1,5					

RECEIVED
JUL 24 2009
DIVISION OF
ENVIRONMENTAL COMPLIANCE

METROPOLITAN ST. LOUIS SEWER DISTRICT
2009 INDUSTRIAL USER SELF MONITORING REPORT

PLEASE READ THE INSTRUCTIONS BEFORE COMPLETING THIS REPORT

PART I: IDENTIFYING INFORMATION

Company Name: Mallinckrodt Inc.
Permit No.: 2112059600 - 2.1
Premise Address: 3600 North Second St., St. Louis, MO 63147
Monitoring Period: ____(JAN-MAR) __X__(APR-JUN) ____(JULY-SEP) ____(OCT-DEC)
Samples Collected By: Mallinckrodt Inc
Analysis Performed By: TEKLAB

Part II: ANALYTICAL RESULTS OF SELF MONITORING

MSD SAMPLE POINT REFERENCE NUMBERS					080						
DATES ON WHICH SAMPLES WERE COLLECTED					6/15/2009						
TIMES AT WHICH SAMPLES WERE COLLECTED					10:00, 11:00, 12:00, 13:00						
PARAMETER	EPA METHOD	DAILY MAX	AVG MONTHLY	RECORD SAMPLE TYPES (G, C, M OR E) & RESULTS BELOW G=Grab, C-composite, M=measured flow, E=estimated flow							UNITS
FLOW				E	3,500						gal/day
Acetone	524.2	20.70	8.20	G	<1.000						mg/L
n-Amyl Acetate	1666	20.70	8.20	G	<0.100						mg/L
Benzene	524.2	3.00	0.70	G	<0.100						mg/L
n-Butyl acetate	1666	20.70	8.20	G	<0.100						mg/L
Chlorobenzene	524.2	3.00	0.70	G	<0.100						mg/L
Chloroform	524.2	0.10	0.03	G	<0.005						mg/L
1,2-Dichlorobenzene	524.2	20.70	8.20	G	<0.100						mg/L
1,2-Dichloroethane	524.2	20.70	8.20	G	<0.100						mg/L
Diethyl amine	1671	255.00	100.00	G	<50						mg/L
Ethyl Acetate	1666	20.70	8.20	G	<0.200						mg/L
n-Heptane	1666	3.00	0.70	G	<0.200						mg/L
n-Hexane	1666	3.00	0.70	G	<0.200						mg/L
Isobutyraldehyde	1666	20.70	8.20	G	<0.200						mg/L
Isopropyl acetate	1666	20.70	8.20	G	<0.100						mg/L
Isopropyl ether	1666	20.70	8.20	G	<0.100						mg/L
Methylene chloride	524.2	3.00	0.70	G	<0.100						mg/L
Methyl formate	1666	20.70	8.20	G	<1.000						mg/L
4-Methyl-2-pentanone	1666	20.70	8.20	G	<0.200						mg/L
Tetrahydrofuran	1666	9.20	3.40	G	<0.400						mg/L
Toluene	524.2	0.30	0.20	G	<0.100						mg/L
Triethyl amine	1671	255.00	100.00	G	<20						mg/L
Xylenes	1666	3.00	0.70	G	<0.100						mg/L
Oil & Grease	1664	200		G	<7						mg/L
Biochemical Oxygen Demand		****		C	<5						mg/L
Chemical Oxygen Demand		****		C	<50						mg/L
Total Suspended Solids		****		C	6						mg/L
Temperature		60		G	24						deg C
pH		5.5 - 11.5		G	9.0						S.U.
Dilution by lab					1, 20						

RECEIVED

JUL 24 2009

DIVISION OF
ENVIRONMENTAL COMPLIANCE

Sample Point 080 Building 98

Process/ Product	Pharmaceutical OCPSF Non-Regulated	Date Start	Date End	Wastewater Disposition	Wastewater Sample Date	OCPSF-Cyanide, Zinc, Lead	Pharmaceutical-Cyanide
Peptides							
Boc-Leuprolide (8050)	Pharmaceutical	04-11-09	04-12-09	Drum		n/a	No
		04-14-09	04-17-09				
		04-20-09	04-30-09				
		04-08-09	04-09-09	MSD		n/a	No
		04-11-09	04-11-09				
		04-13-09	04-20-09				
		04-23-09	04-26-09				
		04-30-09	04-30-09				
		05-01-09	05-06-09				
		05-08-09	05-09-09				
		05-13-09	05-13-09				
		05-22-09	05-23-09				
		06-15-09	06-15-09		06-15-09		
Desmopressin (8061)	Pharmaceutical	05-27-09	05-27-09	Drum		n/a	No
		05-30-09	05-30-09				
		06-01-09	06-01-09				
		06-03-09	06-16-09				
		06-20-09	06-21-09				
		06-24-09	06-26-09				
		05-27-09	05-30-09	MSD			
		06-01-09	06-16-09				
		06-20-09	06-21-09				
		06-24-09	06-26-09				

RECEIVED
JUL 24 2009
DIVISION OF
ENVIRONMENTAL COMPLIANCE

METROPOLITAN ST. LOUIS SEWER DISTRICT
2009 INDUSTRIAL USER SELF MONITORING REPORT

PLEASE READ THE INSTRUCTIONS BEFORE COMPLETING THIS REPORT

PART I: IDENTIFYING INFORMATION

Company Name: Mallinckrodt Inc.

Permit No.: 2112059600 - 2.1

Premise Address: 3600 North Second St., St. Louis, MO 63147

Monitoring Period: ____(JAN-MAR) __X__ (APR-JUNE) _____(JULY-SEPT) _____(OCT-DEC)

Samples Collected By: Mallinckrodt

Analysis Performed By: TEKLAB

Part II: ANALYTICAL RESULTS OF SELF MONITORING

MSD SAMPLE POINT REFERENCE NUMBERS		---->		905				
DATES ON WHICH SAMPLES WERE COLLECTED		---->		6/5/2009				
TIMES AT WHICH SAMPLES WERE COLLECTED		---->		11:00				
	LIMIT (ave)	LIMIT	RECORD SAMPLE TYPES (G,C,M OR E) & RESULTS BELOW G=grab,C=composite,M=measured flow,E=estimated flow					
PARAMETER	(gm/day)	(gm/day)			Lab results mg/L			UNITS
FLOW			M	102.439				gal/day
1,2,4-Trichlorobenzene	137.24	555.98	G	34.90	0.090			gm/day
1,2-Dichlorobenzene	137.24	555.98	G	1.94	0.005			gm/day
1,3-Dichlorobenzene	99.43	266.09	G	1.94	0.005			gm/day
1,4-Dichlorobenzene	99.43	266.09	G	1.94	0.005			gm/day
2-Nitrophenol	45.51	161.75	G	6.98	0.018			gm/day
2-Methyl-4,6-dinitrophenol	54.62	193.96	G	6.98	0.018			gm/day
4-Nitrophenol	113.44	403.33	G	69.79	0.180			gm/day
Acenapthene	13.3	32.91	G	3.49	0.009			gm/day
Anthracene	13.3	32.91	G	3.49	0.009			gm/day
Bis(2-ethylhexyl)phthalate	66.52	180.66	G	41.88	0.108			gm/day
Diethyl phthalate	32.21	79.13	G	3.49	0.009			gm/day
Dimethyl phthalate	13.3	32.91	G	3.49	0.009			gm/day
Di-n-butyl phthalate	14	30.11	G	3.49	0.009			gm/day
Fluoranthene	15.4	37.81	G	3.49	0.009			gm/day
Fluorene	13.3	32.91	G	3.49	0.009			gm/day
Hexachlorobenzene	137.24	555.98	G	34.90	0.090			gm/day
Hexachlorobutadiene	99.43	266.09	G	34.90	0.090			gm/day
Hexachloroethane	137.24	555.98	G	34.90	0.090			gm/day
Naphthalene	13.3	32.91	G	3.49	0.009			gm/day
Phenanthrene	13.3	32.91	G	3.49	0.009			gm/day
Pyrene	14	33.61	G	3.49	0.009			gm/day
1,1,1-Trichloroethane	15.4	41.31	G	1.94	0.005			gm/day
1,1,2-Trichloroethane	22.4	88.93	G	1.94	0.005			gm/day
1,1-Dichloroethane	15.4	41.31	G	1.94	0.005			gm/day
1,1-Dichloroethene	15.4	41.31	G	1.94	0.005			gm/day
1,2-Dichloroethane	126.04	401.93	G	1.94	0.005			gm/day
1,2-Dichloropropane	137.24	555.98	G	1.94	0.005			gm/day
Benzene	39.91	93.83	G	0.78	0.002			gm/day
Carbon Tetrachloride	99.43	266.09	G	1.94	0.005			gm/day
Chlorobenzene	99.43	266.09	G	1.94	0.005			gm/day
Chloroethane	77.02	206.57	G	3.88	0.010			gm/day
Chloroform	77.72	277.57	G	1.94	0.005			gm/day
Chloromethane	77.02	277.57	G	3.88	0.010			gm/day
cis-1,3-Dichloropropene	137.24	555.98	G	1.94	0.005			gm/day
Ethylbenzene	99.43	266.09	G	1.94	0.005			gm/day
Methylene Chloride	77.02	119.04	G	1.94	0.005			gm/day
Nitrobenzene	1566.4	4482.84	G	34.90	0.090			gm/day
Tetrachloroethene	36.41	114.84	G	1.94	0.005			gm/day
Toluene	19.61	51.82	G	1.94	0.005			gm/day
trans-1,2-Dichloroethene	17.51	46.21	G	1.94	0.005			gm/day
trans-1,3-Dichloropropene	137.24	555.98	G	1.94	0.005			gm/day
Trichloroethene	18.21	48.32	G	1.94	0.005			gm/day
Vinyl Chloride	67.92	120.44	G	0.78	0.002			gm/day
Shaded values represent detection limits								
Lab Dilution Factor				1, 5, 10				

RECEIVED
JUL 24 2009
DIVISION OF
ENVIRONMENTAL COMPLIANCE

METROPOLITAN ST. LOUIS SEWER DISTRICT
2009 INDUSTRIAL USER SELF MONITORING REPORT

PLEASE READ THE INSTRUCTIONS BEFORE COMPLETING THIS REPORT

PART I: IDENTIFYING INFORMATION

Company Name: Mallinckrodt Inc.

Permit No.: 2112059600 - 2.1

Premise Address: 3600 North Second St., St. Louis, MO 63147

Monitoring Period: _____(JAN-MAR) __X__(APR-JUNE) ____(JULY-SEPT) ____(OCT-DEC)

Samples Collected By: Mallinckrodt Inc

Analysis Performed By: TEKLAB

Part II: ANALYTICAL RESULTS OF SELF MONITORING

MSD SAMPLE POINT REFERENCE NUMBERS	----->		912						
DATES ON WHICH SAMPLES WERE COLLECTED	----->		See attached						
TIMES AT WHICH SAMPLES WERE COLLECTED	----->								
PARAMETER	LIMIT	RECORD SAMPLE TYPES (G,C,M OR E) & RESULTS BELOW G=grab,C=composite,M=measured flow,E=estimated flow							UNITS
FLOW		M	See attached						gal/day
DMAC (daily max)	7091	C	See attached						lb/day
DMAC (monthly average)	5459	C	See attached						lb/day
	*								
* Monitoring requirement only.									
Lab Dilution Factor			1						

RECEIVED
JUL 24 2009
DIVISION OF
ENVIRONMENTAL COMPLIANCE

DMAC Analysis and Mass Loadings - SP912
2nd Quarter 2009

Analysis by TEKLAB unless otherwise noted.

Date	Flow GPD	DMAC mg/l	DMAC lb/day
April - 09			
4/6/2009	183,522	1600	2118
4/12/2009	160,078	1200	1806
4/19/2009	110,527	910	285
4/20/2009	61,107	970	531
4/27/2009	210,100	1400	2746
April Ave:			**1,497 lb/day**
Daily Max:			**2,746 lb/day**
May - 09			
5/4/2009	82,782	1000	697
5/11/2009	167,981	1300	2216
5/18/2009	111,059	1100	1037
5/25/2009	215,398	1200	2195
May Ave:			**1,536 lb/day**
Daily Max:			**2,216 lb/day**
June - 09			
6/1/2009	173,403	1800	2651
6/8/2009	173,745	1000	1475
6/15/2009	202,777	1300	2239
6/22/2009	37,498	25	8
6/29/2009	61,462	910	475
June Ave:			**1,369 lb/day**
Daily Max:			**2,651 lb/day**

RECEIVED
JUL 24 2009
DIVISION OF
ENVIRONMENTAL COMPLIANCE

METROPOLITAN ST. LOUIS SEWER DISTRICT
2009 INDUSTRIAL USER SELF MONITORING REPORT

PART I: IDENTIFYING INFORMATION

Company Name: **MALLINCKRODT INC.**
Permit No.: 2112059600 - 2.1 Effective Date: 07-01-2008 Expiration Date: 05-31-2010
Premise Address: 3600 North Second St., St. Louis, MO 63147
Monitoring Period: ____(JAN-MAR) __X__(APR-JUN) ____(JULY-SEP) ____(OCT-DEC)
Samples Collected By: Mallinckrodt Inc
Analysis Performed By: TEKLAB

Part II: ANALYTICAL RESULTS OF SELF MONITORING ✓

MSD SAMPLE POINT REFERENCE NUMBERS			---->		915							
DATES ON WHICH SAMPLES WERE COLLECTED			---->		6/22/2009							
TIMES AT WHICH SAMPLES WERE COLLECTED			---->		10:30							
PARAMETER	EPA METHOD	DAILY MAX	AVG MONTHLY	RECORD SAMPLE TYPES (G, C, M OR E) & RESULTS BELOW G=Grab, C-composite, M=measured flow, E=estimated flow								UNITS
FLOW				E	20,000							gal/day
Acetone	524.2	20.70	8.20	G	0.210							mg/L
n-Amyl acetate	1666	20.70	8.20	G	<0.100							mg/L
Benzene	524.2	3.00	0.70	G	<0.100							mg/L
n-Butyl acetate	1666	20.70	8.20	G	<0.100							mg/L
Chlorobenzene	524.2	3.00	0.70	G	<0.100							mg/L
Chloroform	524.2	0.10	0.03	G	<0.020							mg/L
1,2-Dichlorobenzene	524.2	20.70	8.20	G	<0.100							mg/L
1,2-Dichloroethane	524.2	20.70	8.20	G	<0.100							mg/L
Diethyl amine	1671	255.00	100.00	G	*							mg/L
Ethyl Acetate	1666	20.70	8.20	G	<0.200							mg/L
n-Heptane	1666	3.00	0.70	G	<0.200							mg/L
n-Hexane	1666	3.00	0.70	G	<0.200							mg/L
Isobutyraldehyde	1666	20.70	8.20	G	<0.200							mg/L
Isopropyl acetate	1666	20.70	8.20	G	<0.100							mg/L
Isopropyl ether	1666	20.70	8.20	G	<0.100							mg/L
Methylene chloride	524.2	3.00	0.70	G	<0.100							mg/L
Methyl formate	1666	20.70	8.20	G	<1							mg/L
4-Methyl-2-pentanone	1666	20.70	8.20	G	<0.200							mg/L
Tetrahydrofuran	1666	9.20	3.40	G	<0.400							mg/L
Toluene	524.2	0.30	0.20	G	0.044							mg/L
Triethyl amine	1671	255.00	100.00	G	*							mg/L
Xylenes	1666	3.00	0.70	G	<0.100							mg/L
** Annual sampling requirement for this parameter.*												
Dilution by lab					5, 20							

RECEIVED
JUL 24 2009
DIVISION OF
ENVIRONMENTAL COMPLIANCE

METROPOLITAN ST. LOUIS SEWER DISTRICT
2009 INDUSTRIAL USER SELF MONITORING REPORT

PART I: IDENTIFYING INFORMATION

Company Name: **MALLINCKRODT INC.**
Permit No.: 2112059600 - 2.1 Effective Date: 07-01-2008 Expiration Date: 05-31-2010
Premise Address: 3600 North Second St., St. Louis, MO 63147
Monitoring Period: ____(JAN-MAR) __X__(APR-JUN) ____(JULY-SEP) ____(OCT-DEC)
Samples Collected By: Mallinckrodt Inc
Analysis Performed By: TEKLAB

Part II: ANALYTICAL RESULTS OF SELF MONITORING

MSD SAMPLE POINT REFERENCE NUMBERS					**918**					
DATES ON WHICH SAMPLES WERE COLLECTED										
TIMES AT WHICH SAMPLES WERE COLLECTED										
PARAMETER	EPA METHOD	DAILY MAX	AVG MONTHLY	**RECORD SAMPLE TYPES (G, C, M OR E) & RESULTS BELOW** G=Grab, C-composite, M=measured flow, E=estimated flow						UNITS
FLOW				E	*					gal/day
Acetone	524.2	20.70	8.20	G						mg/L
Ethyl Acetate	1666	20.70	8.20	G						mg/L
Isopropyl acetate	1666	20.70	8.20	G						mg/L
Methylene chloride	524.2	3.00	0.70	G						mg/L
n-Amyl acetate	1666	20.70	8.20	G						mg/L
**** No flow this quarter***										
Dilution by lab										

RECEIVED
JUL 24 2009
DIVISION OF
ENVIRONMENTAL COMPLIANCE

METROPOLITAN ST. LOUIS SEWER DISTRICT
2009 INDUSTRIAL USER SELF MONITORING REPORT

PART I: IDENTIFYING INFORMATION

Company Name: **MALLINCKRODT INC.**
Permit No.: 2112059600 - 2.1 Effective Date: 07-01-2008 Expiration Date: 05-31-2010
Premise Address: 3600 North Second St., St. Louis, MO 63147
Monitoring Period: ____(JAN-MAR) __X__(APR-JUN) ____(JULY-SEP) _ ___(OCT-DEC)
Samples Collected By: Mallinckrodt Inc
Analysis Performed By: TEKLAB

Part II: ANALYTICAL RESULTS OF SELF MONITORING

MSD SAMPLE POINT REFERENCE NUMBERS					920							
DATES ON WHICH SAMPLES WERE COLLECTED					4/7/2009							
TIMES AT WHICH SAMPLES WERE COLLECTED					1200							
PARAMETER	EPA METHOD	DAILY MAX	AVG MONTHLY	RECORD SAMPLE TYPES (G, C, M OR E) & RESULTS BELOW G=Grab, C-composite, M=measured flow, E=estimated flow								UNITS
FLOW				E	22,000	E						gal/day
Tetrahydrofuran	1666	9.20	3.40	G	<0.400	G						mg/L
Toluene	524.2	0.30	0.20	G	<0.100	G						mg/L
Dilution by lab					20							

RECEIVED
JUL 24 2009
DIVISION OF
ENVIRONMENTAL COMPLIANCE

METROPOLITAN ST. LOUIS SEWER DISTRICT
2009 INDUSTRIAL USER SELF MONITORING REPORT

PART I: IDENTIFYING INFORMATION

Company Name: **MALLINCKRODT INC.**
Permit No.: 2112059600 - 2.1 Effective Date: 07-01-2008 Expiration Date: 05-31-2010
Premise Address: 3600 North Second St., St. Louis, MO 63147
Monitoring Period: ____(JAN-MAR) __X__(APR-JUN) ____(JULY-SEP) ____(OCT-DEC)
Samples Collected By: Mallinckrodt Inc
Analysis Performed By: TEKLAB

Part II: ANALYTICAL RESULTS OF SELF MONITORING

MSD SAMPLE POINT REFERENCE NUMBERS			---->		927						
DATES ON WHICH SAMPLES WERE COLLECTED			---->		6/28/2009						
TIMES AT WHICH SAMPLES WERE COLLECTED			---->		12:00						
PARAMETER	EPA METHOD	DAILY MAX	AVG MONTHLY	RECORD SAMPLE TYPES (G, C, M OR E) & RESULTS BELOW G=Grab, C-composite, M=measured flow, E=estimated flow							UNITS
FLOW				E	2,200						gal/day
Acetone	524.2	20.70	8.20	G	<1						mg/L
n-Amyl acetate	1666	20.70	8.20	G	<0.100						mg/L
Ethyl Acetate	1666	20.70	8.20	G	<0.200						mg/L
Isopropyl acetate	1666	20.70	8.20	G	<0.100						mg/L
Methylene chloride	524.2	3.00	0.70	G	<0.100						mg/L
Dilution by lab					20						

RECEIVED
JUL 24 2009
DIVISION OF
ENVIRONMENTAL COMPLIANCE

METROPOLITAN ST. LOUIS SEWER DISTRICT
2009 INDUSTRIAL USER SELF MONITORING REPORT

PLEASE READ THE INSTRUCTIONS BEFORE COMPLETING THIS REPORT

PART I: IDENTIFYING INFORMATION

Company Name: Mallinckrodt Inc.
Permit No.: 2112059600 - 2.1
Premise Address: 3600 North Second St., St. Louis, MO 63147
Monitoring Period: ____(JAN-MAR) __X__(APR-JUN) ____(JULY-SEP) _____(OCT-DEC)
Samples Collected By: Mallinckrodt Inc
Analysis Performed By: TekLab

Part II: ANALYTICAL RESULTS OF SELF MONITORING

MSD SAMPLE POINT REFERENCE NUMBERS					930						
DATES ON WHICH SAMPLES WERE COLLECTED					5/5/2009						
TIMES AT WHICH SAMPLES WERE COLLECTED					1400						
PARAMETER	EPA METHOD	DAILY MAX	AVG MONTHLY	RECORD SAMPLE TYPES (G, C, M OR E) & RESULTS BELOW G=Grab, C-composite, M=measured flow, E=estimated flow							UNITS
FLOW				E	2200						gal/day
Acetone	524.2	20.70	8.20	G	<1						mg/L
Ethyl Acetate	1666	20.70	8.20	G	<0.200						mg/L
Isopropyl acetate	1666	20.70	8.20	G	<0.100						mg/L
Methylene chloride	524.2	3.00	0.70	G	<0.100						mg/L
n-Amyl acetate	1666	20.70	8.20	G	<0.100						mg/L
Dilution by lab					20						

RECEIVED
JUL 24 2009
DIVISION OF
ENVIRONMENTAL COMPLIANCE

METROPOLITAN ST. LOUIS SEWER DISTRICT
2009 INDUSTRIAL USER SELF MONITORING REPORT

PLEASE READ THE INSTRUCTIONS BEFORE COMPLETING THIS REPORT

PART I: IDENTIFYING INFORMATION

Company Name: Mallinckrodt Inc.
Permit No.: 2112059600 - 2.1
Premise Address: 3600 North Second St., St. Louis, MO 63147
Monitoring Period: ____(JAN-MAR) __X__(APR-JUN) ____(JULY-SEP) ____(OCT-DEC)
Samples Collected By: Mallinckrodt Inc
Analysis Performed By: TekLab

Part II: ANALYTICAL RESULTS OF SELF MONITORING

MSD SAMPLE POINT REFERENCE NUMBERS ----->					932						
DATES ON WHICH SAMPLES WERE COLLECTED ----->											
TIMES AT WHICH SAMPLES WERE COLLECTED ----->											
PARAMETER	EPA METHOD	DAILY MAX	AVG MONTHLY	RECORD SAMPLE TYPES (G, C, M OR E) & RESULTS BELOW G=Grab, C=composite, M=measured flow, E=estimated flow							UNITS
FLOW				E	0						gal/day
Acetone	524.2	20.70	8.20	G	*						mg/L
Benzene	524.2	3.00	0.70	G	*						mg/L
Chlorobenzene	524.2	3.00	0.70	G	*						mg/L
Chloroform	524.2	0.10	0.03	G	*						mg/L
1,2-Dichlorobenzene	524.2	20.70	8.20	G	*						mg/L
1,2-Dichloroethane	524.2	20.70	8.20	G	*						mg/L
Ethyl Acetate	1666	20.70	8.20	G	*						mg/L
n-Hexane	1666	3.00	0.70	G	*						mg/L
Methylene chloride	524.2	3.00	0.70	G	*						mg/L
4-Methyl-2-pentanone	1666	20.70	8.20	G	*						mg/L
Tetrahydrofuran	1666	9.20	3.40	G	*						mg/L
Toluene	524.2	0.30	0.20	G	*						mg/L
Xylenes	1666	3.00	0.70	G	*						mg/L
Isobutyraldehyde	1666	20.70	8.20	G	*						mg/L
n-Amyl acetate	1666	20.70	8.20	G	*						mg/L
n-Butyl acetate	1666	20.70	8.20	G	*						mg/L
Isopropyl acetate	1666	20.70	8.20	G	*						mg/L
Isopropyl ether	1666	20.70	8.20	G	*						mg/L
n-Heptane	1666	3.00	0.70	G	*						mg/L
Methyl formate	1666	20.70	8.20	G	*						mg/L
Diethyl amine	1671	255.00	100.00	G	*						mg/L
Triethyl amine	1671	255.00	100.00	G	*						mg/L
** No flow this quarter*											
Dilution by lab											

RECEIVED
JUL 24 2009
DIVISION OF
ENVIRONMENTAL COMPLIANCE

METROPOLITAN ST. LOUIS SEWER DISTRICT
2009 INDUSTRIAL USER SELF MONITORING REPORT

PLEASE READ THE INSTRUCTIONS BEFORE COMPLETING THIS REPORT

PART I: IDENTIFYING INFORMATION

Company Name: Mallinckrodt Inc.
Permit No.: 2112059600 - 2.1
Premise Address: 3600 North Second St., St. Louis, MO 63147
Monitoring Period: ____(JAN-MAR) __X__(APR-JUN) ____(JULY-SEP) ____(OCT-DEC)
Samples Collected By: Mallinckrodt Inc
Analysis Performed By: TekLab

Part II: ANALYTICAL RESULTS OF SELF MONITORING

MSD SAMPLE POINT REFERENCE NUMBERS			---->		933						
DATES ON WHICH SAMPLES WERE COLLECTED			---->		6/2/2009						
TIMES AT WHICH SAMPLES WERE COLLECTED			---->		09:00						
PARAMETER	EPA METHOD	DAILY MAX	AVG MONTHLY	RECORD SAMPLE TYPES (G, C, M OR E) & RESULTS BELOW G=Grab, C-composite, M=measured flow, E=estimated flow							UNITS
FLOW				E	3,000						gal/day
Acetone	524.2	20.70	8.20	G	<1						mg/L
n-Amyl acetate	1666	20.70	8.20	G	<0.100						mg/L
Ethyl Acetate	1666	20.70	8.20	G	<0.200						mg/L
Isopropyl acetate	1666	20.70	8.20	G	<0.100						mg/L
Methylene chloride	524.2	3.00	0.70	G	<0.100						mg/L
Dilution by lab					20						

RECEIVED

JUL 24 2009

DIVISION OF
ENVIRONMENTAL COMPLIANCE

METROPOLITAN ST. LOUIS SEWER DISTRICT
2009 INDUSTRIAL USER SELF MONITORING REPORT

PLEASE READ THE INSTRUCTIONS BEFORE COMPLETING THIS REPORT

PART I: IDENTIFYING INFORMATION

Company Name: Mallinckrodt Inc.
Permit No.: 2112059600 - 2.1
Premise Address: 3600 North Second St., St. Louis, MO 63147
Monitoring Period: ____(JAN-MAR) __X__(APR-JUN) ____(JULY-SEP) ____(OCT-DEC)
Samples Collected By: Mallinckrodt Inc
Analysis Performed By:

Part II: ANALYTICAL RESULTS OF SELF MONITORING

MSD SAMPLE POINT REFERENCE NUMBERS					935							
DATES ON WHICH SAMPLES WERE COLLECTED												
TIMES AT WHICH SAMPLES WERE COLLECTED												
PARAMETER	EPA METHOD	DAILY MAX	AVG MONTHLY	RECORD SAMPLE TYPES (G, C, M OR E) & RESULTS BELOW G=Grab, C-composite, M=measured flow, E=estimated flow								UNITS
FLOW				E	0							gal/day
Acetone	524.2	20.70	8.20	G	*							mg/L
Benzene	524.2	3.00	0.70	G	*							mg/L
Chlorobenzene	524.2	3.00	0.70	G	*							mg/L
Chloroform	524.2	0.10	0.03	G	*							mg/L
1,2-Dichlorobenzene	524.2	20.70	8.20	G	*							mg/L
1,2-Dichloroethane	524.2	20.70	8.20	G	*							mg/L
Ethyl Acetate	1666	20.70	8.20	G	*							mg/L
n-Hexane	1666	3.00	0.70	G	*							mg/L
Methylene chloride	524.2	3.00	0.70	G	*							mg/L
4-Methyl-2-pentanone	1666	20.70	8.20	G	*							mg/L
Tetrahydrofuran	1666	9.20	3.40	G	*							mg/L
Toluene	524.2	0.30	0.20	G	*							mg/L
Xylenes	1666	3.00	0.70	G	*							mg/L
Isobutyraldehyde	1666	20.70	8.20	G	*							mg/L
n-Amyl acetate	1666	20.70	8.20	G	*							mg/L
n-Butyl acetate	1666	20.70	8.20	G	*							mg/L
Isopropyl acetate	1666	20.70	8.20	G	*							mg/L
Isopropyl ether	1666	20.70	8.20	G	*							mg/L
n-Heptane	1666	3.00	0.70	G	*							mg/L
Methyl formate	1666	20.70	8.20	G	*							mg/L
Diethyl amine	1671	255.00	100.00	G	*							mg/L
Triethyl amine	1671	255.00	100.00	G	*							mg/L
**** No PEG flow this quarter***												
Dilution by lab												

RECEIVED

JUL 24 2009

DIVISION OF
ENVIRONMENTAL COMPLIANCE

METROPOLITAN ST. LOUIS SEWER DISTRICT
2009 INDUSTRIAL USER SELF MONITORING REPORT

PLEASE READ THE INSTRUCTIONS BEFORE COMPLETING THIS REPORT

PART I: IDENTIFYING INFORMATION

Company Name: Mallinckrodt Inc.
Permit No.: 2112059600 - 2.1
Premise Address: 3600 North Second St., St. Louis, MO 63147
Monitoring Period: ____(JAN-MAR) _X___(APR-JUN) ____(JULY-SEP) ____(OCT-DEC)
Samples Collected By: Mallinckrodt Inc
Analysis Performed By: TEKLAB

Part II: ANALYTICAL RESULTS OF SELF MONITORING

MSD SAMPLE POINT REFERENCE NUMBERS ----->					936						
DATES ON WHICH SAMPLES WERE COLLECTED ----->					4/6/2009						
TIMES AT WHICH SAMPLES WERE COLLECTED ----->					11:00						
PARAMETER	EPA METHOD	DAILY MAX	AVG MONTHLY	**RECORD SAMPLE TYPES (G, C, M OR E) & RESULTS** G=Grab, C-composite, M=measured flow, E=estimated flow							UNITS
FLOW				E	14,400						gal/day
Acetone	524.2	20.70	8.20	G	<1						mg/L
n-Amyl acetate	1666	20.70	8.20	G	<0.100						mg/L
Benzene	524.2	3.00	0.70	G	<0.100						mg/L
n-Butyl acetate	1666	20.70	8.20	G	<0.100						mg/L
Chlorobenzene	524.2	3.00	0.70	G	<0.100						mg/L
Chloroform*	524.2	0.10	0.03	G	<0.020						mg/L
1,2-Dichlorobenzene	524.2	20.70	8.20	G	<0.100						mg/L
1,2-Dichloroethane	524.2	20.70	8.20	G	<0.100						mg/L
Diethyl amine	1671	255.00	100.00	G	**						mg/L
Ethyl Acetate	1666	20.70	8.20	G	<0.200						mg/L
n-Heptane	1666	3.00	0.70	G	<0.200						mg/L
n-Hexane	1666	3.00	0.70	G	<0.200						mg/L
Isobutyraldehyde	1666	20.70	8.20	G	<0.200						mg/L
Isopropyl acetate	1666	20.70	8.20	G	<0.100						mg/L
Isopropyl ether	1666	20.70	8.20	G	<0.100						mg/L
Methylene chloride	524.2	3.00	0.70	G	<0.100						mg/L
Methyl formate	1666	20.70	8.20	G	<1						mg/L
4-Methyl-2-pentanone	1666	20.70	8.20	G	<0.200						mg/L
Tetrahydrofuran	1666	9.20	3.40	G	<0.400						mg/L
Toluene	524.2	0.30	0.20	G	<0.100						mg/L
Triethyl amine	1671	255.00	100.00	G	**						mg/L
Xylenes	1666	3.00	0.70	G	<0.100						mg/L
* Chloroform Results	Raw Water	SP936									
4/6/2009	<0.020 mg/l	<0.020 mg/l									
Results above reported as the difference between SP936 and Raw Water.											
** Annual sampling requirement for these parameters.											
Dilution by lab					20						

RECEIVED

JUL 24 2009

DIVISION OF
ENVIRONMENTAL COMPLIANCE

METROPOLITAN ST. LOUIS SEWER DISTRICT
2009 INDUSTRIAL USER SELF MONITORING REPORT

PLEASE READ THE INSTRUCTIONS BEFORE COMPLETING THIS REPORT

PART I: IDENTIFYING INFORMATION

Company Name: Mallinckrodt Inc.
Permit No.: 2112059600 - 2.1
Premise Address: 3600 North Second St., St. Louis, MO 63147
Monitoring Period: ___(JAN-MAR) __X__(APR-JUN) ____(JULY-SEP) ____(OCT-DEC)
Samples Collected By: Mallinckrodt Inc
Analysis Performed By: TEKLAB

Part II: ANALYTICAL RESULTS OF SELF MONITORING

MSD SAMPLE POINT REFERENCE NUMBERS			---->		937						
DATES ON WHICH SAMPLES WERE COLLECTED			---->		4/7/2009						
TIMES AT WHICH SAMPLES WERE COLLECTED			---->		12:00						
PARAMETER	EPA METHOD	DAILY MAX	AVG MONTHLY	RECORD SAMPLE TYPES (G, C, M OR E) & RESULTS BELOW G=Grab, C-composite, M=measured flow, E=estimated flow							UNITS
FLOW				E	22,000						gal/day
Tetrahydrofuran	524.2	9.20	3.40	G	<0.400						mg/L
Toluene	524.2	0.30	0.20	G	<0.100						mg/L
Dilution by lab					20						

RECEIVED

JUL 24 2009

DIVISION OF
ENVIRONMENTAL COMPLIANCE

METROPOLITAN ST. LOUIS SEWER DISTRICT
2009 INDUSTRIAL USER SELF MONITORING REPORT

PLEASE READ THE INSTRUCTIONS BEFORE COMPLETING THIS REPORT

PART I: IDENTIFYING INFORMATION

Company Name: Mallinckrodt Inc.
Permit No.: 2112059600 - 2.1
Premise Address: 3600 North Second St., St. Louis, MO 63147
Monitoring Period: ____(JAN-MAR) __X__(APR-JUN) ____(JULY-SEP) ____(OCT-DEC)
Samples Collected By: Mallinckrodt Inc
Analysis Performed By: TekLab

Part II: ANALYTICAL RESULTS OF SELF MONITORING

MSD SAMPLE POINT REFERENCE NUMBERS			---->		938						
DATES ON WHICH SAMPLES WERE COLLECTED			---->		6/16/2009						
TIMES AT WHICH SAMPLES WERE COLLECTED			---->		11:00						
PARAMETER	EPA METHOD	DAILY MAX	AVG MONTHLY	RECORD SAMPLE TYPES (G, C, M OR E) & RESULTS BELOW G=Grab, C-composite, M=measured flow, E=estimated flow							UNITS
FLOW				E	3,000						gal/day
Acetone	524.2	20.70	8.20	G	<1						mg/L
n-Amyl acetate	1666	20.70	8.20	G	<0.100						mg/L
Ethyl Acetate	1666	20.70	8.20	G	<0.200						mg/L
Isopropyl acetate	1666	20.70	8.20	G	<0.100						mg/L
Methylene chloride	524.2	3.00	0.70	G	<0.100						mg/L
Dilution by lab					20						

RECEIVED
JUL 24 2009
DIVISION OF
ENVIRONMENTAL COMPLIANCE

Metropolitan St. Louis Sewer District

Division of Environmental Compliance
10 East Grand Avenue
St. Louis, MO 63147-2913
Phone: 314.768.6200 www.stlmsd.com

July 22, 2009

Lisa Meyer
MALLINCKRODT
3600 North Second St.
St. Louis, MO 63147

Dear Ms. Meyer:

We have reviewed your application dated July 7, 2009 requesting approval to discharge 880 gallons of wastewater to the Metropolitan St. Louis Sewer District for treatment. This wastewater is an unusable batch of Ioversol/water solution from Building 505 of the Mallinckrodt facility located at 3600 North Second Street, St. Louis, Missouri. Information provided on the application indicates the Ioversol is a contrast imaging media, and that this unusable batch will be discharged through sampling point 010.

Based on the information you provided, this wastewater meets MSD Ordinance 12559 standards and is approved for discharge into a sanitary sewer on site. This approval is valid for 30 days from the date of this letter.

You must be certain the waste is discharged into a sanitary or combined sewer inlet only. This letter does not authorize any discharge to a separate storm sewer, or to any watercourse, as any such discharge would be in violation of state and federal laws. **Please notify me at the number below when the discharge is to commence.**

This discharge has been approved based upon the information and sample analysis you provided, and is subject to the conditions stated above. This approval may be revoked by the District at any time if any of the information is found to be incorrect, or if the conditions of this approval are violated. Also, if the discharge causes any operational or maintenance problem within the District's collection or treatment system, or results in violations of any conditions of the District's NPDES permit, Mallinckrodt will be considered responsible for damages.

If you have any questions, please call me at (314) 436-8755.

Sincerely,
METROPOLITAN ST. LOUIS SEWER DISTRICT

Steven M. Grace

Steve Grace
Environmental Assistant Engineer

bv

pc: Roland Biehl

File: IU, MALLINCKRODT INC [2112059600], 3600 N. 2nd St., St. Louis, Missouri

C1A

SD EVALUATION CHECKLIST - ON SITE

APPLICATION INFORMATION

Source Name: Mallinckrodt Inc. Evaluated by: SMG

Premise Address: 3600 S. 2nd St. Date: 7/22/09

Send approval letter to applicant

Application Dated: 7/7/09 Received: 7/8/09 All Requested Info. Received: 7/22/09

SOURCE FILING/DESCRIPTION

1 - Source in PIMS? (Y) / N |
2 - If No, on IU Cross-Ref list? * Y / N |
3 - If No, MSD Account # from E-CIS? Y / N |
4 - If none, on "Source" list (pre-IMS)? ** Y / N |
5 - If No, assigned SOUR# from PIMS. |

SOURCE TYPE (circle): (IU) / Dead IU / SD

INDUSTRY ID: 21120596-00

* o:\costrecovery\cross reference xls file

** o:\costrecovery\sourlist xls file

Sample Point: No. Assigned: 845 Description: unusable batch of Iversol/water solution from Bldg. 505 (contrast imaging media)

Normal WW flow from premise? N/A _____ ccf/month, 2,992,101 GPD, _____ GPH. from SP010

REGULATORY STATUS

Is waste a Hazardous Waste? (N) / Y _____

Categorical standards apply? (N) / Y _____

Contain PCB/ asbestos/ radioactive/ dioxin/ used oil? (N) / Y _____

Regulatory Agency Oversight? (N) / Y _____

DISCHARGE CONSIDERATIONS At MSD's connection:

Ordinance Limits (12559, p32) exceeded? (N) / Y _____

Ordinance other limits exceeded (dye, flash pt <140F, temp >140F, obstruction, nuisance foaming/odor, corrosion causing): (N) / Y _____

Water Quality Standard exceeded? (N) / Y _____

Fumes in sewer exceed PEL/TLV limits? (N) / Y _____

Vapors in sewer exceed 10% of LEL? (N) / Y _____

RECOMMENDATION: (APPROVE) / DENY (cc WWTP Mgr for timed discharge)

APPROVAL CONDITIONS:

Timed Discharge (COD/BOD/WQ/foam): (N) / Y Limit = _____ gal/hour

Require Treatment before Discharge? (N) / Y _____

Laboratory analysis fee due? (N) / Y $_____

SMR required? (N) / Y Frequency/analysis: _____

SMR log: (N/A) / Remediation.xls / Nonremediation.xls

Volume Billing applies (water unmetered or credited)? (N) / Y

Bill High Strength? (N) / Y Yes, If use >60,000 gal/month water ___and, > norm WW strgth

Surcharge calculation attached: (N/A) / N / Y

Expiration log updated: (N/A) / N / Y

O:\CostRecovery\Special Discharge\C1a.Checklist.doc

COVIDIEN

Facsimile Communication

To: Mr. Steve Grace

Company: MSD Environmental Compliance

Fax Number: 314.436.8766

Date: July 7, 2009

Number of Pages *(including cover sheet)*: 9

Health, Safety, Environmental

Lisa Meyer
Senior HSE Engineer

Covidien/Mallinckrodt
3600 N. Second St.
St. Louis, Missouri 63147

Telephone 314-654-3374
Facsimile 314-654-1251

- ☐ For your information
- X Please respond
- ☐ Urgent
- ☐ Confidential

Comments:

Dear Mr. Grace,

Attached please find an application for Special Discharge for 880 gallons of an Ioversol and water solution from Building 505. If you have any questions or need additional information, please contact me.

Thank you,

Lisa Meyer

Metropolitan St. Louis Sewer District

Phone No. (314) 436-8710
Division of Environmental Compliance, 10 East Grand Avenue, St. Louis, Missouri 63147 Fax No. (314) 436-8766

APPLICATION FOR SPECIAL DISCHARGE APPROVAL

I. WASTEWATER SOURCE IDENTIFICATION:

Site Name: Mallinckrodt
Premise Address: 3600 North 2nd St.
City: St. Louis State: MO Zip: 63147
Owner: Mallinckrodt
Contact Person: Lisa Meyer
Title: Senior HSE Engineer
Phone: 314.654.3374 Fax: 314.654.1251

II. APPLICANT (mailing information):

Applicant Name: Lisa Meyer
Title: Senior HSE Engineer
Company Name: Mallinckrodt
Mailing Address: 3600 North 2nd St.
City: St. Louis State: MO Zip: 63147
Phone: 314.654.3374 Fax: 314.654.1251

III. A. MATERIAL TO BE DISCHARGED (check all applicable boxes):

1. Wastewater description/location: Iversol/Water solution from Bldg 505
2. Process/activity generating wastewater: One unusable batch of contrast imaging media (Iversol) and water processed in Building 505. Total quantity of 880 gallons.
3. Physical and chemical composition: List all constituents, and known or potentially present regulated contaminants below.
   ☐ See separate listing enclosed, and/or ☐ See analytical results enclosed, and/or ☑ Material Safety Data Sheet enclosed.

DESCRIPTION	RANGE	UNIT
25% Iversol (by weight)		
Water	880	gal

DESCRIPTION *(continued)*	RANGE	UNIT

4. Is this wastewater from a process subject to EPA's categorical standards in 40 CFR Subchapter N? ☐ Yes ☑ No
   a. If yes, the applicable standards are in: 40 CFR Part _____, Subpart _____ ☐ Existing source ☐ New source
5. Does this wastewater contain polychlorinated biphenyls, asbestos or radioactive material? ☐ Yes ☑ No
   a. If yes, describe: _____
6. Representative sample: ☐ Laboratory results attached, and/or ☐ Sample provided (1/2 gallon minimum, clear container)
   a. Sample collection point/location: _____ Collection method: _____
   b. Sampler's name/Co.: _____ Sample date/time: _____
   c. Attach chain of custody as available
7. Discharge will occur over the following time period: ☐ < 30 days ☐ ≥ Two years ☑ Other: one-time
   a. Expected total volume of wastewater to be discharged over the time period above: 880 Gallons
   b. Proposed discharge volume: 880 Gallons, at a frequency of: ☑ One time ☐ Daily ☐ Weekly ☐ Monthly ☐ Once/three months ☐ Once/six months ☐ Other: _____
8. Pretreatment of wastewater prior to discharge: ☐ None ☑ Yes, describe: pH neutralization system at main outfall SP010.
   a. If yes, attach site plan, pretreatment system schematic, and design specifications.
9. Wastewater from a remediation project under: ☐ Superfund/CERCLA ☐ RCRA ☐ Voluntary program ☐ UST ☑ Not applicable
   a. If from a remediation project, briefly describe the past and present utilization of the property: _____

III.B. MATERIAL FROM UNDERGROUND STORAGE TANK SOURCE

☑ **Not applicable (go to Section IV)**

Please answer the following questions if you are requesting to discharge wastewater associated with an underground storage tank system.

1. a. Wastewater from: ☐ Inside UST(s) ☐ UST system pit ☐ Excavation outside UST system pit ☐ Monitoring well ☐ Groundwater remediation system

   b. UST project involves wastewater from: ☐ UST(s) closed in place ☐ UST(s) removed ☐ Remediation ☐ Upgrade ☐ Maintenance activities ☐ Well monitoring ☐ Other, explain: _____

   c. If wastewater is from a closure project, how long has UST(s) been out of service: _____ years

2. a. State assigned UST site identification number: _____ ☐ Not applicable

   b. Number of USTs affected: _____ ☐ Unknown

   c. For the UST(s) involved, their state identification number(s): _____ ☐ Not applicable

   d. Service Station Identification Number, as applicable: _____

3. Tank contents/former contents: ☐ Gasoline ☐ #2 diesel ☐ Used oil ☐ Unknown ☐ Other: _____

IV. DISCHARGE LOCATION

1. ☑ On-site. Describe proposed point of entry to sewer and the discharge rate (must be a sanitary or combined sewer): _____

   plant sewer to main outfall SP010 Note: Range of discharge must not surcharge sewer line.

2. ☐ Haul to MSD Bissell Point Hauled Waste Receiving Station at 10 E. Grand, St. Louis, MO.

   a. Transporters Name: _____ and MSD Hauler ID Number: _____

   b. Hazardous Waste Certification:

   For wastewater which is hauled to MSD's Bissell Point Hauled Waste Receiving Station, I hereby certify that to the best of my knowledge and belief, the above hauled waste is not classified as a RCRA "hazardous waste" as defined by the MDNR in 10 CSR 25 or USEPA in 40 CFR Part 261.

   Applicant Name (print): _____

   Signature: _____ **Date:** _____

ADDITIONAL INFORMATION:

_____

V. APPLICANT SIGNATURE AND CERTIFICATION

This application must be signed by the applicant: either the source contact, or a contractor or agent directly responsible for site activities.

I hereby certify that I am directly responsible for activities at the site regarding the wastewater to be discharged, and to the best of my knowledge and belief, based on appropriate inquiry, the information in this application is true, complete, and accurate. The samples or analyses submitted are representative of the materials to be discharged. If granted approval to discharge, I agree to abide by the MSD Ordinances, and all applicable federal, state and local regulations. I agree to pay the costs of any pre-approval analyses performed by MSD and to pay any applicable disposal charges for the volume and strength of the wastes discharged.

Applicant Name (print): Lisa Meyer

Signature: Lisa Meyer **Date:** 7/7/09

FOR MSD USE ONLY:

File Name: Mallinckrodt Inc. ID No. 21120596-00 Sample Point No. 845

MSDS Number: **IOVRS** * * * * * *Effective Date: 06/17/03* * * * * *Supercedes: 10/01/01*

MSDS *Material Safety Data Sheet*

From: Mallinckrodt Inc.
675 McDonnnell Blvd.
St. Louis, MO 63042

MALLINCKRODT

24 Hour Emergency Telephone: 314-654-1600
CHEMTREC: 1-800-424-9300
National Response in Canada
CANUTEC: 613-996-6666
Outside U.S. And Canada
Chemtrec: 703-527-3887

NOTE: CHEMTREC, CANUTEC and National Response Center emergency numbers to be used only in the event of chemical emergencies involving a spill, leak, fire, exposure or accident involving chemicals.

IOVERSOL

1. Product Identification

Synonyms: OPTIRAY; N,N'-bis(2,3-dihydroxypropyl)-5-[N-(2-hydroxyethyl)-glycolamido]-2,4,6-triiodoisophthalamide
CAS No.: 87771-40-2
Molecular Weight: 807.13
Chemical Formula: C18H24I3N3O9
Product Codes: Product Codes: 0946, 7888, 7957, 8327, 8777

2. Composition/Information on Ingredients

Ingredient	CAS No	Percent	Hazardous
Ioversol	87771-40-2	100%	No

3. Hazards Identification

Emergency Overview

As part of good industrial and personal hygiene and safety procedure, avoid all unnecessary exposure to the chemical substance and ensure prompt removal from skin, eyes and clothing.

Potential Health Effects

Inhalation:
Not expected to be a health hazard.
Ingestion:
Extremely large oral dosages may produce gastrointestinal disturbances.
Skin Contact:
No adverse effects expected.
Eye Contact:
No adverse effects expected but splashes may cause mechanical irritation.
Chronic Exposure:
No adverse health effects expected.
Aggravation of Pre-existing Conditions:
May provoke an allergic reaction in people allergic to iodine or iodinated substances.

4. First Aid Measures

Inhalation:
Not expected to require first aid measures.
Ingestion:
If large amounts were swallowed, give water to drink and get medical advice.
Skin Contact:
Wash exposed area with soap and water. Get medical advice if irritation develops.
Eye Contact:
In case of contact, immediately flush eyes with plenty of water for at least 15 minutes, lifting upper and lower eyelids occasionally. Call a physician if irritation persists.

5. Fire Fighting Measures

Fire:
Not considered to be a fire hazard.
Explosion:
Not considered to be an explosion hazard.
Fire Extinguishing Media:
Use any means suitable for extinguishing surrounding fire.
Special Information:
In the event of a fire, wear full protective clothing and NIOSH-approved self-contained breathing apparatus with full facepiece operated in the pressure demand or other positive pressure mode.

6. Accidental Release Measures

Ventilate area of leak or spill. Wear appropriate personal protective equipment as specified in Section 8. Spills: Sweep up and containerize for reclamation or disposal. Vacuuming or wet sweeping may be used to avoid dust dispersal.

7. Handling and Storage

Keep in a tightly closed container, stored in a cool, dry, ventilated area. Protect against physical damage.

8. Exposure Controls/Personal Protection

Airborne Exposure Limits:
- OSHA Permissible Exposure Limit (PEL):
15 mg/m3 total dust, 5 mg/m3 respirable fraction for nuisance dusts.
- ACGIH Threshold Limit Value (TLV)
for Particulates (insoluble or poorly soluble) Not Otherwise Specified (PNOS):
3 mg/m3 respirable particles and 10 mg/m3 inhalable particles.

Ventilation System:
A system of local and/or general exhaust is recommended to keep employee exposures below the Airborne Exposure Limits. Local exhaust ventilation is generally preferred because it can control the emissions of the contaminant at its source, preventing dispersion of it into the general work area. Please refer to the ACGIH document, *Industrial Ventilation, A Manual of Recommended Practices*, most recent edition, for details.

Personal Respirators (NIOSH Approved):
If the exposure limit is exceeded, a half-face dust/mist respirator may be worn for up to ten times the exposure limit or the maximum use concentration specified by the appropriate regulatory agency or respirator supplier, whichever is lowest. A full-face piece dust/mist respirator may be worn up to 50 times the exposure limit, or the maximum use concentration specified by the appropriate regulatory agency, or respirator supplier, whichever is lowest. For emergencies or instances where the exposure levels are not known, use a full-facepiece positive-pressure, air-supplied respirator. WARNING: Air-purifying respirators do not protect workers in oxygen-deficient atmospheres.

Skin Protection:
Wear protective gloves and clean body-covering clothing.

Eye Protection:
Safety glasses. Maintain eye wash fountain and quick-drench facilities in work area.

9. Physical and Chemical Properties

Appearance:
White powder.

Odor:
Odorless.

Solubility:
Very soluble in water.

Specific Gravity:
1.188-1.371

pH:
No information found.

% Volatiles by volume @ 21C (70F):

No information found.
Boiling Point:
No information found.
Melting Point:
No information found.
Vapor Density (Air=1):
No information found.
Vapor Pressure (mm Hg):
No information found.
Evaporation Rate (BuAc=1):
No information found.

10. Stability and Reactivity

Stability:
Stable under ordinary conditions of use and storage. Light sensitive. Hygroscopic.
Hazardous Decomposition Products:
May emit toxic fumes of nitrogen oxides and iodine when heated to decomposition.
Hazardous Polymerization:
Will not occur.
Incompatibilities:
No information found.
Conditions to Avoid:
No information found.

11. Toxicological Information

Intravenous rat LD50: 15 gm/kg (68% injection)

--------\Cancer Lists\----------

Ingredient	---NTP Carcinogen--- Known	Anticipated	IARC Category
Ioversol (87771-40-2)	No	No	None

12. Ecological Information

Environmental Fate:
No information found.
Environmental Toxicity:
No information found.

13. Disposal Considerations

Whatever cannot be saved for recovery or recycling should be managed in an appropriate and approved waste disposal facility. Processing, use or contamination of this product may change the waste management options. State and local disposal regulations may differ from federal disposal regulations. Dispose of container and unused contents in accordance with federal, state and local requirements.

14. Transport Information

Not regulated.

15. Regulatory Information

--------\Chemical Inventory Status - Part 1\--------

Ingredient	TSCA	EC	Japan	Australia
Ioversol (87771-40-2)	Exempt	No	No	No

--------\Chemical Inventory Status - Part 2\--------

Ingredient	Korea	--Canada-- DSL	NDSL	Phil.
Ioversol (87771-40-2)	No	No	No	No

--------\Federal, State & International Regulations - Part 1\--------

Ingredient	-SARA 302- RQ	TPQ	------SARA 313------ List	Chemical Catg.
Ioversol (87771-40-2)	No	No	No	No

--------\Federal, State & International Regulations - Part 2\--------

Ingredient	CERCLA	-RCRA- 261.33	-TSCA- 8(d)
Ioversol (87771-40-2)	No	No	No

Chemical Weapons Convention: No TSCA 12(b): No CDTA: No
SARA 311/312: Acute: No Chronic: No Fire: No Pressure: No
Reactivity: No (Pure / Solid)

Australian Hazchem Code: None allocated.
Poison Schedule: None allocated.
WHMIS:
This MSDS has been prepared according to the hazard criteria of the Controlled Products Regulations (CPR) and the MSDS contains all of the information required by the CPR.

16. Other Information

NFPA Ratings: Health: **0** Flammability: **1** Reactivity: **0**
Label Hazard Warning:
As part of good industrial and personal hygiene and safety procedure, avoid all unnecessary exposure to the chemical substance and ensure prompt removal from skin, eyes and clothing.
Label Precautions:
None.
Label First Aid:
Not applicable.
Product Use:
Diagnostic imaging agent
Revision Information:
MSDS Section(s) changed since last revision of document include: 8.
Disclaimer:
****

Mallinckrodt provides the information contained herein in good faith but makes no representation as to its comprehensiveness or accuracy. This document is intended only as a guide to the appropriate precautionary handling of the material by a properly trained person using this product. Individuals receiving the information must exercise their independent judgment in determining its appropriateness for a particular purpose. MALLINCKRODT MAKES NO REPRESENTATIONS OR WARRANTIES, EITHER EXPRESS OR IMPLIED, INCLUDING WITHOUT LIMITATION ANY WARRANTIES OF MERCHANTABILITY, FITNESS FOR A PARTICULAR PURPOSE WITH RESPECT TO THE INFORMATION SET FORTH HEREIN OR THE PRODUCT TO WHICH THE INFORMATION REFERS. ACCORDINGLY, MALLINCKRODT WILL NOT BE RESPONSIBLE FOR DAMAGES RESULTING FROM USE OF OR RELIANCE UPON THIS INFORMATION.
****

Prepared by: Environmental Health & Safety
Phone Number: (314) 654-1600 (U.S.A.)

SR

COVIDIEN

MALLINCKRODT
2112-0596-00

JUNE 22, 2009

Mr. George Pappas
Metropolitan St. Louis Sewer District
Department of Environmental Compliance
2350 Market Street
St. Louis, MO 63103-2555

RE: Request for Sewer Tie for New Hazardous Waste Storage Pad Project
Industrial Wastewater Discharge Permit No. 2112059600-2.1

Dear Mr. Pappas:

Please find attached the Plan Review Information Sheet for a combined sewer tie in connection from our new hazardous waste storage pad project.

As I mentioned in our phone conversation, we currently have an Industrial Wastewater Discharge permit for this site as issued by Mr. Scott M. Rehmer and Mr. Douglas M. Mendoza, P.E in the Department of Environmental Compliance at MSD. The permit number is 2112059600-2.1 which has an effective date of July 1, 2008 and an expiration date of May 31, 2010. The facility also has an Industrial User Questionnaire submission on file with the Department of Environmental Compliance.

The new hazardous waste storage pad will be replacing our existing pad which is scheduled for demolition later this year. The sewer tie in requested in this application will connect to the same line as the existing hazardous waste pad connection. A 14% increase in runoff (or 0.56 cfs) will result in the new structure and concrete work from this project, but will be decreased by approximately the same amount when the demolition of the existing hazardous waste pad is complete.

RECEIVED
JUN 23 2009
DIVISION OF
ENVIRONMENTAL COMPLIANCE

COVIDIEN/MALLINCKRODT
3600 NORTH SECOND STREET
ST. LOUIS, MO 63147

TELEPHONE: 314-654-2000
FAX: 314-654-1251

Metropolitan St. Louis Sewer District

Division of Environmental Compliance
10 East Grand Avenue
St. Louis, MO 63147-2913
Phone: 314.768.6200 www.stlmsd.com

July 7, 2009

Lisa Meyer
MALLINCKRODT
3600 North Second St.
St. Louis, MO 63147

Dear Ms. Meyer:

We have reviewed your application dated July 6, 2009 requesting approval to discharge 635 gallons of wastewater to the Metropolitan St. Louis Sewer District for treatment. This wastewater is an unusable batch of buffer reduced Diamide solution from Building 507 of the Mallinckrodt facility located at 3600 North Second Street, St. Louis, Missouri. In a previous telephone conversation on January 8, 2009, you indicated that the reduced Diamide solution is a precursor to the production of imaging product MP104.

In a July 6, 2009 telephone conversation, you indicated this wastewater already contains the buffering agents (sodium hydroxide and phosphoric acid) to bring the pH to 6.5, and that this batch was rendered unusable during an extended power outage that occurred last week. You stated this waste stream will be discharged through sampling point 010.

Based on the information you provided, this wastewater meets MSD Ordinance 12559 standards and is approved for discharge into a sanitary sewer on site. This approval is valid for 30 days from the date of this letter.

You must be certain the waste is discharged into a sanitary or combined sewer inlet only. This letter does not authorize any discharge to a separate storm sewer, or to any watercourse, as any such discharge would be in violation of state and federal laws. **Please notify me at the number below when the discharge is to commence.**

This discharge has been approved based upon the information and sample analysis you provided, and is subject to the conditions stated above. This approval may be revoked by the District at any time if any of the information is found to be incorrect, or if the conditions of this approval are violated. Also, if the discharge causes any operational or maintenance problem within the District's collection or treatment system, or results in violations of any conditions of the District's NPDES permit, Mallinckrodt will be considered responsible for damages.

If you have any questions, please call me at (314) 436-8755.

Sincerely,
METROPOLITAN ST. LOUIS SEWER DISTRICT

Steven M. Grace

Steve Grace
Environmental Assistant Engineer

bv

pc: Roland Biehl

File: IU, MALLINCKRODT INC [2112059600], 3600 N. 2nd St., St. Louis, Missouri

Mallinckrodt

635 gals. total

50% NaOH - 50% NaOH x 101 gals. = 50.5 gals. => NaOH = 50.5 gals.
50% water x 101 gals. = 50.5 gals.

75% Phos. Acid - 75% Phos. x 95 gals. = 71.3 gals. => Phos. = 71.3 gals.
25% water x 95 gals = 23.8 gals.

Diamide & water = 439 gals => Diamide + water = 513.3 gals.

NaOH is 8% of wastewater
Phos. is 11% " "
Dia. & wtr. is 81% " "

per Lisa Meyer, the NaOH & Phosphoric acid are added as neutralizing agents; pH is 6.5 per SD Appl.; the only change between this wastewater & the diamide approved in 1/09 is the neutralizing agents already added in this one; this is an unusable batch resulting from a power outage last week

C1A

SD EVALUATION CHECKLIST - ON SITE

APPLICATION INFORMATION

Source Name: Mallinckrodt, Inc. Evaluated by: SMG

Premise Address: 3600 N. 2nd St. Date: 7/7/09

Send approval letter to applicant

Application Dated: 7/6/09 Received: 7/6/09 All Requested Info. Received: 7/6/09

SOURCE FILING/DESCRIPTION

1 - Source in PIMS? (Y) / N |
2 - If No, on IU Cross-Ref list? * Y / N |
3 - If No, MSD Account # from E-CIS? Y / N |
4 - If none, on "Source" list (pre-IMS)? ** Y / N |
5 - If No, assigned SOUR# from PIMS. |

SOURCE TYPE (circle): (IU) / Dead IU / SD

INDUSTRY ID: 21120596-00

* o:\costrecovery\cross reference xls file

** o:\costrecovery\sourlist xls file

Sample Point: No. Assigned: 843 Description: unusable batch of buffer reduced Diamide solution (pH of 6.5)

Normal WW flow from premise? N/A _____ ccf/month, 2,992,101 GPD, _____ GPH.
from SP010

REGULATORY STATUS

Is waste a Hazardous Waste? (N) / Y _____

Categorical standards apply? (N) / Y _____

Contain PCB/ asbestos/ radioactive/ dioxin/ used oil? (N) / Y _____

Regulatory Agency Oversight? (N) / Y _____

DISCHARGE CONSIDERATIONS At MSD's connection:

Ordinance Limits (12559, p32) exceeded? (N) / Y _____

Ordinance other limits exceeded (dye, flash pt <140F, temp >140F, obstruction, nuisance foaming/odor, corrosion causing): (N) / Y _____

Water Quality Standard exceeded? (N) / Y _____

Fumes in sewer exceed PEL/TLV limits? (N) / Y _____

Vapors in sewer exceed 10% of LEL? (N) / Y _____

RECOMMENDATION: (APPROVE) / DENY (cc WWTP Mgr for timed discharge)

APPROVAL CONDITIONS:

Timed Discharge (COD/BOD/WQ/foam): (N) / Y Limit = _____ gal/hour

Require Treatment before Discharge? (N) / Y _____

Laboratory analysis fee due? (N) / Y $_____

SMR required? (N) / Y Frequency/analysis: _____

SMR log: (N/A) / Remediation.xls / Nonremediation.xls

Volume Billing applies (water unmetered or credited)? (N) / Y

Bill High Strength? (N) / Y Yes, If use >60,000 gal/month water ___and, > norm WW strgth

Surcharge calculation attached: (N/A) / N / Y

Expiration log updated: (N/A) / N / Y

O:\CostRecovery\Special Discharge\C1a.Checklist.doc

COVIDIEN

Facsimile Communication

To: Mr. Steve Grace
Company: MSD Environmental Compliance
Fax Number: 314.436.8766
Date: July 6, 2009

Number of Pages *(including cover sheet)*: 25

Health, Safety, Environmental

Lisa Meyer
Senior HSE Engineer

Covidien/Mallinckrodt
3600 N. Second St.
St. Louis, Missouri 63147

Telephone 314-654-3374
Facsimile 314-654-1251

- ☐ For your information
- X Please respond
- X Urgent
- ☐ Confidential

Comments:

Dear Mr. Grace,

Attached please find an application for Special Discharge for 635 gallons of Buffer Reduced Diamide solution from Building 507. If you have any questions or need additional information, please contact me.

Thank you,

Lisa Meyer

Metropolitan St. Louis Sewer District

Phone No. (314) 436-8710
Division of Environmental Compliance, 10 East Grand Avenue, St. Louis, Missouri 63147 Fax No. (314) 436-8766

APPLICATION FOR SPECIAL DISCHARGE APPROVAL

I. WASTEWATER SOURCE IDENTIFICATION:

Site Name: Mallinckrodt
Premise Address: 3600 North 2nd St.
City: St. Louis State: MO Zip: 63147
Owner: Mallinckrodt
Contact Person: Lisa Meyer
Title: Senior HSE Engineer
Phone: 314.654.3374 Fax: 314.654.1251

II. APPLICANT (mailing information):

Applicant Name: Lisa Meyer
Title: Senior HSE Engineer
Company Name: Mallinckrodt
Mailing Address: 3600 North 2nd St.
City: St. Louis State: MO Zip: 63147
Phone: 314.654.3374 Fax: 314.654.1251

III. A. MATERIAL TO BE DISCHARGED (check all applicable boxes):

1. Wastewater description/location: Buffer Reduced Diamide solution from Bldg. 507
2. Process/activity generating wastewater: One unusable batch of buffer reduced diamide solution processed in Building 507. Total quantity of 635 gallons. pH of solution is 6.5.
3. Physical and chemical composition: List all constituents, and known or potentially present regulated contaminants below.
   ☐ See separate listing enclosed, and/or ☐ See analytical results enclosed, and/or ☑ Material Safety Data Sheet enclosed.

DESCRIPTION	RANGE	UNIT
50% Sodium hydroxide	101	gal
75% phosphoric acid	95	gal
Reduced diamide (5.72 kg)	4.37	gal
+ Water		

DESCRIPTION *(continued)*	RANGE	UNIT

4. Is this wastewater from a process subject to EPA's categorical standards in 40 CFR Subchapter N? ☐ Yes ☑ No
   a. If yes, the applicable standards are in: 40 CFR Part _____, Subpart _____ ☐ Existing source ☐ New source
5. Does this wastewater contain polychlorinated biphenyls, asbestos or radioactive material? ☐ Yes ☑ No
   a. If yes, describe: _____
6. Representative sample: ☐ Laboratory results attached, and/or ☐ Sample provided (1/2 gallon minimum, clear container)
   a. Sample collection point/location: _____ Collection method: _____
   b. Sampler's name/Co.: _____ Sample date/time: _____
   c. Attach chain of custody as available
7. Discharge will occur over the following time period: ☐ < 30 days ☐ ≥ Two years ☑ Other: July 6, 2009
   a. Expected total volume of wastewater to be discharged over the time period above: 635 Gallons
   b. Proposed discharge volume: 635 Gallons, at a frequency of: ☑ One time ☐ Daily ☐ Weekly ☐ Monthly ☐ Once/three months ☐ Once/six months ☐ Other: _____
8. Pretreatment of wastewater prior to discharge: ☐ None ☑ Yes, describe: pH neutralization system at main outfall SP018.
   a. If yes, attach site plan, pretreatment system schematic, and design specifications.
9. Wastewater from a remediation project under: ☐ Superfund/CERCLA ☐ RCRA ☐ Voluntary program ☐ UST ☑ Not applicable
   a. If from a remediation project, briefly describe the past and present utilization of the property: _____

III.B. MATERIAL FROM UNDERGROUND STORAGE TANK SOURCE

☑ **Not applicable (go to Section IV)**

Please answer the following questions if you are requesting to discharge wastewater associated with an underground storage tank system.

1. a. Wastewater from: ☐ Inside UST(s) ☐ UST system pit ☐ Excavation outside UST system pit ☐ Monitoring well ☐ Groundwater remediation system

   b. UST project involves wastewater from: ☐ UST(s) closed in place ☐ UST(s) removed ☐ Remediation ☐ Upgrade ☐ Maintenance activities ☐ Well monitoring ☐ Other, explain: _____

   c. If wastewater is from a closure project, how long has UST(s) been out of service: _____ years

2. a. State assigned UST site identification number: _____ ☐ Not applicable

   b. Number of USTs affected: _____ ☐ Unknown

   c. For the UST(s) involved, their state identification number(s): _____ ☐ Not applicable

   d. Service Station Identification Number, as applicable: _____

3. Tank contents/former contents: ☐ Gasoline ☐ #2 diesel ☐ Used oil ☐ Unknown ☐ Other: _____

IV. DISCHARGE LOCATION

1. ☑ On-site. Describe proposed point of entry to sewer and the discharge rate (must be a sanitary or combined sewer): _____

   plant sewer to main outfall SP010 Note: Range of discharge must not surcharge sewer line.

2. ☐ Haul to MSD Bissell Point Hauled Waste Receiving Station at 10 E. Grand, St. Louis, MO.

   a. Transporters Name: _____ and MSD Hauler ID Number: _____

   b. Hazardous Waste Certification:

   For wastewater which is hauled to MSD's Bissell Point Hauled Waste Receiving Station, I hereby certify that to the best of my knowledge and belief, the above hauled waste is not classified as a RCRA "hazardous waste" as defined by the MDNR in 10 CSR 25 or USEPA in 40 CFR Part 261.

   Applicant Name (print): _____

   Signature: _____ **Date:** _____

ADDITIONAL INFORMATION:

_____

V. APPLICANT SIGNATURE AND CERTIFICATION

This application must be signed by the applicant: either the source contact, or a contractor or agent directly responsible for site activities.

I hereby certify that I am directly responsible for activities at the site regarding the wastewater to be discharged, and to the best of my knowledge and belief, based on appropriate inquiry, the information in this application is true, complete, and accurate. The samples or analyses submitted are representative of the materials to be discharged. If granted approval to discharge, I agree to abide by the MSD Ordinances, and all applicable federal, state and local regulations. I agree to pay the costs of any pre-approval analyses performed by MSD and to pay any applicable disposal charges for the volume and strength of the wastes discharged.

Applicant Name (print): Lisa Meyer

Signature: Lisa Meyer **Date:** 7/6/09

FOR MSD USE ONLY:

File Name: Mallinckrodt ID No. 21120596-00 Sample Point No. 843

COVIDIEN

If you have any questions or need additional information, please call me at 314.654.3374.

Sincerely,

Lisa Meyer
Senior HSE Engineer

CC: MR. DOUG MENDOZA, MGR. OF INDUSTRIAL PRETREATMENT, MSD
(COVER LETTER/PLAN REVIEW INFORMATION SHEET ONLY)

ENCLOSURES

RECEIVED
JUN 23 2009
DIVISION OF
ENVIRONMENTAL COMPLIANCE

COVIDIEN/MALLINCKRODT
3600 NORTH SECOND STREET
ST. LOUIS, MO 63147

TELEPHONE: 314-654-2000
FAX: 314-654-1251

PLAN REVIEW INFORMATION SHEET
THE METROPOLITAN ST. LOUIS SEWER DISTRICT
2350 MARKET STREET, ST. LOUIS, MO 63103

(314) 768-6272 (314) 768-6302 FAX

Complete this information sheet in its entirety, submit with required number of plans (see page two), and **a submittal fee of $450.00.**

1. Engineers Name: Middaugh Inc
   Address: 100 S. 4th St. City: St Louis
   State: MO Zip Code 63102 Phone (314) 735.8080
   Contact: Michael T. Walsh, P.E. Fax (314) 735.8010
2. Owner's Name: Covidien / Mallinckrodt Inc.
   Address: 3600 North 2nd Street City: St. Louis
   State: MO Zip Code 63147 Phone (314) 654.3374
   Contact: Lisa Meyer Fax (314) 654.1251
3. Type of ownership (circle one): (corporate) Individual Partnership

If you want correspondence to be mailed to the Contractor/Drainlayer, please fill in the following information.

4. Contractor/ Drainlayer's Name: McGrath + Associates
   Address: 1920 S. Kingshighway City: St. Louis
   State: MO Zip Code 63110 Phone (314) 772.7600 ext. 144
   Contact: Nick Knobbe Fax (314) 772.4894
5. Location information:
   a. Accurate location of property relative to an intersection
      NW corner of North 2nd St. Alley & Destrehan St.
      (**If not** at an intersection, the distance from the property to the nearest intersection)
   b. Wunnenberg's page number 27 and grid number E-18
   c. St. Louis County Locator Number NA City of St. Louis Parcel Number(s) 12000000010
   d. City of St. Louis Block Number 1200.00
   e. Street Address of Project 101 - 129 Angelrodt
   f. Levee District St. Louis Metropolitan Sewer District
   g. MSD Base Map Number 17D3
6. Residential subdivisions, street improvements, sanitary and storm extensions need only to complete item 'a'.

   All other projects must complete items 'a' through 'd'.

   Total Acreage of Improvement (a) 0.98 acres **Total Acreage of Property** (c) 45 acres

   Total Impervious acreage of Improvement (b) 0.98 acres **% of Imperviousness** (d) 100
   (Total area to be paved plus buildings) **(b / a) x 100 = %**
   Existing Impervious Acreage 0.98 acres

See attached sheet

RECEIVED

JUN 23 2009

DIVISION OF ENVIRONMENTAL COMPLIANCE

PLAN REVIEW INFORMATION SHEET

ITEM 6: ATTACHMENT

RUNOFF CALCULATIONS:

Q=API

Q: RUNOFF IN CUBIC FEET PER SECOND

A: DRAINAGE AREA IN ACRES

PI: RUNOFF COEFFICIENT BASED ON SURFACE & RUNOFF FROM A 20-YEAR 20-MINUTE STORM EVENT

PI GRAVEL: 3.50

PI CONCRETE: 3.70

PI ROOF: 6.0

EXISTING AREA

0.98 ACRES IN PROJECT SCOPE

0.38 ACRES OF GRAVEL & 0.60 ACRES OF CONCRETE

Q = (0.38 ACRES)(3.50) + (0.60 ACRES)(3.70)

Q = 3.55 CFS

AFTER CONSTRUCTION OF BUILDING AND NEW CONCRETE (TO REPLACE SOME GRAVEL)

0.98 ACRES IN PROJECT SCOPE

0.21 ACRES OF ROOF, 0.38 ACRES NEW CONCRETE, 0.39 ACRES EXISTING CONCRETE

Q = (0.21 ACRES)(6.0) +(0.77 ACRES)(3.70)

Q = 4.11 CFS

INCREASE RUNOFF AS A RESULT OF THIS PROJECT: 14% OR 0.56 CFS

RECEIVED

JUN 23 2009

DIVISION OF
ENVIRONMENTAL COMPLIANCE

7. State usage of development (commercial, industrial, apartments, condominiums, subdivision, etc)
industrial

8. a. Size of water tap required for development: 4 inch
domestic size N/A fire / irrigation 4 inch
b. Number of Apartment Units, Condos, or Lots N/A

9. If this submittal is a **revision and/or addendum** to a previous project, please note P-_____, and describe below. **Changes should be circled in red on plans.**
New applicaton

10. St. Louis County PAC Number _____
(Commercial projects only)

Worksheet to determine number of required plans

PLEASE CHECK	NUMBER REQUIRED	USE
✓	3	Minimum Number Required
N/A	3	Project has Pump Station or Low Level Pressure System
N/A	1	Project has Detention Requirement
	3	Total Required for this Project *

* Failure to submit the correct number of plans may result in the reject of project for review.

Form E.2

RECEIVED
JUN 23 2009
DIVISION OF
ENVIRONMENTAL COMPLIANCE

Minimum Submittal Requirements
Checklist

- ☑ 1.Submital Sheet filled out
- ☑ 2.North arrow and Scale
- ☑ 3. Location Map
- ☑ 4. Legend
- ☑ 5. Sheet Index
- ☑ 6. Sheets numbered
- ☑ 7. Title Block with Project Name, Engineer info, Owner info
- ☑ 8. Engineers Seal signed and dated
- ☑ 9. Construction notes
- ☑ 10. Street Names
- ☑ 11. Lot/Property Limits and dimensions See attached survey
- ☑ 12. MSD Benchmark See attached survey for site BM. Nearest MSD BM is #5019 at Angelrodt & Blair.
- ☑ 13. Existing Manholes with MSD number and pipe sizes top and flowline elevations
- ☑ 14. Existing utilities or note there are none
- ☑ 15. Show proposed buildings and lots
- ☑ 16. Show Parking, streets drives
- ☑ 17. Show Storm and Sanitary sewers and structures; identify structures
- ☑ 18. Existing and proposed contours; don't stop at property line
- ☑ 19. Drainage Area Map; delineate tributary areas, PI factors and flows (Q).
- NA ☐ 20. Sewer profile sheet(s); top and flowline of structures, pipe sizes, existing and proposed ground profile, and hydraulic gradeline.
- NA ☐ 21. Hydraulic calculations for sewers storage and BMP's
- NA ☐ 22. Detention Calculations
- NA ☐ 23. BMP's
- NA ☐ 24. Flood Study

Provide an explanation for any of the above items not submitted. Please note that an incomplete submittal may lead to an incomplete review.

Per meeting with George Pappas and Michael T. Walsch P.E, Middough, Items 20-24 are not required for this submittal.

An Industrial User Questionnaire has been completed and is on-file with the Department of Environmental Compliance, Mr. Douglas Mendoza, P.E.

RECEIVED
JUN 23 2009
DIVISION OF
ENVIRONMENTAL COMPLIANCE

OFFICE OF ENVIRONMENTAL COMPLIANCE
MEMORANDUM

MEMO TO: MALLINCKRODT INC [2112059600]

FROM: Tom Boehm

DATE: June 17, 2009

SUBJECT: **Phenolics on Field Sampling Requirements**

There are multiple Phenols and other semi-volatiles on site in significant quantities according to IUQ, so they were left on Field Sampling Requirements for this company. No benefit to removing phenols because Method 625 still needs to be performed for this wastewater.

M:\phenol\ phenol cleanup w061709 - MALLINCKRODT INC [2112059600]

Mallinckrodt

COVIDIEN

JUNE 9, 2009

Mr. Doug Mendoza
Metropolitan St. Louis Sewer District
Department of Environmental Compliance
10 East Grand Avenue
St. Louis, MO 63147-2913

RE: Notification of Maintenance in Building 505 –
PERMIT NO. 2112059600-2.1

Dear Mr. Mendoza:

Per our phone conversation on June 8, 2009, this letter is a notification that the imaging drug production process in Building 505 is planning to perform a maintenance activity to investigate wastewater generation as a result of the production.

Currently, wastewater from Building 505 is collected in a tank which is then pumped via sump pumps to a tank in Building 504. The tank in Building 504 also collects wastewater from Building 504. The combined wastewater is then pH adjusted prior to the discharge to plant sewers. The plant sewers are discharged to MSD after pH neutralization through the plant's main outfall, SP010.

From June 10 through June 12, 2009, Building 505 will be shutting off the sump pumps. This will result in approximately 65 gallons per minute of wastewater to be discharged directly to plant sewers bypassing Building's 504 pH adjust system. The average pH of the sump water has been trended and is within our permit limit range. This wastewater will be discharged to MSD through the plant's main outfall, SP010 after pH neutralization. We do not expect any adverse wastewater conditions as a result of this activity.

RECEIVED
JUN 10 2009
DEPT. OF ENVIRONMENTAL COMPLIANCE

COVIDIEN/MALLINCKRODT
3600 NORTH SECOND STREET
ST. LOUIS, MO 63147

TELEPHONE: 314-654-2000
FAX: 314-654-1251

COVIDIEN

This notification is in accordance with Ordinance 12559 and Permit #2112059600-2.1.

If you have any questions or need additional information, please call me at 314.654.3374.

Sincerely,

Lisa Meyer
Senior HSE Engineer

RECEIVED
JUN 10 2009
DEPT. OF ENVIRONMENTAL COMPLIANCE

COVIDIEN/MALLINCKRODT
3600 NORTH SECOND STREET
ST. LOUIS, MO 63147

TELEPHONE: 314-654-2000
FAX: 314-654-1251

Metropolitan St. Louis Sewer District

Division of Environmental Compliance
10 East Grand Avenue
St. Louis, MO 63147-2913
Phone: 314.768.6200 www.stlmsd.com

May 22, 2008

Sharon R. Cotner
DEPARTMENT OF THE ARMY,
CORPS OF ENGINEERS
8945 Latty Avenue
Berkeley, MO 63134

Re: FUSRAP St. Louis Downtown Site

Dear Ms. Cotner:

We have reviewed your request dated May 16, 2008 for extension of a special discharge originally approved in our letters dated July 23, 2001 and October 13, 2004, and extended through July 23, 2008 in our letter dated June 19, 2006. This approval was for stormwater and groundwater that accumulates in excavations of radioactively contaminated soils at the St. Louis Downtown FUSRAP site located at the Mallinckrodt facility, 3600 N. 2nd Street, St. Louis, Missouri. You have requested a two-year extension of your current approval.

Your request for an extension is granted. This approval will expire on July 23, 2010.

As a condition of this approval, you must notify us of any changes that would affect the characteristics of this discharge. The self-monitoring reporting requirements and all other conditions of the above referenced approvals remain in effect.

Please contact me at (314) 436-8755 with questions or comments.

Sincerely,
METROPOLITAN ST. LOUIS SEWER DISTRICT

Steven M. Grace

Steve Grace
Environmental Assistant Engineer

bv

File: IU – MALLINCKRODT INC [2112059600], SP809

Metropolitan St. Louis Sewer District
Division of Environmental Compliance
10 East Grand Avenue
St. Louis, MO 63147-2913
Phone: 314.768.6200 www.stlmsd.com

211 2059600

May 28, 2009

Lisa Meyer
MALLINCKRODT INC
3600 North 2nd Street
St. Louis, MO 63147

RE: Account Number 0118821-8

Dear Ms. Meyer:

The Metropolitan St. Louis Sewer District (MSD) routinely reviews analytical data, which shows the strength of wastewaters discharged by industrial users. The purpose of this review is to determine which users should pay extra strength surcharges as authorized by Sewer Service Charge Ordinance 12561. The analytical results for BOD, COD, and TSS are used for this purpose. Surcharges become applicable for a user when their average concentrations of BOD, COD, and/or TSS exceed normal concentrations.

Our records show that your discharge has been sampled 15 times during the past 22 months, including seven certified MSD self-monitoring reports certified MSD contract monitoring report) as required by your discharge permit, and eight MSD routine monitoring samples. The average concentrations of BOD, COD, and TSS calculated from this sample data are higher than your current billing surcharge concentrations. Therefore, your surcharge concentrations will be increased, resulting in a higher surcharge fee per CcF of wastewater discharged. The average concentrations of BOD, COD and TSS calculated from these sample data indicate that your facility is subject to the surcharge provisions of the Ordinance. Shown below are the ordinance normal concentrations, current billing surcharge concentrations and the new average concentrations for the 15 samples referenced above. The data from the 15 samples used to calculate the new averages are enclosed as Attachment 1.

PARAMETER	MSD ORDINANCE NORMAL CONCENTRATIONS (mg/L)	CURRENT BILLING CONCENTRATIONS (mg/L)	NEW AVERAGE CONCENTRATIONS (mg/L)
BOD	300	368	431
COD	600	905	947
TSS	300	199	83

The new average concentrations shown above will be used to determine the amount of surcharge on future sewer service charges billed to Mallinckrodt Inc by MSD unless you are able to provide a detailed justification for using different values. As part of your justification for using different values, you may provide additional sampling data or explain why any of the results used in calculating the above averages may not be representative of your average wastewater strength.

Any additional analytical data you wish to provide must be submitted on the enclosed Extra Strength Surcharge Monitoring Report form. You will need to explain how this data is representative of your wastewater strength. If you elect to submit additional information or new data, please provide this information by **June 29, 2009**.

In the absence of a response, we will consider you have elected to accept the new average concentrations and we will use these values for future surcharge billing as provided by MSD Ordinance 12561, Section Three, (B)(2)(c). If you agree to accept the new average concentrations at this time, you may in the future request that MSD recertify Mallinckrodt Inc extra strength surcharge values with updated information. A recertification may be granted using updated sample data you provide and/or updated sample data in our records.

For your convenience we have enclosed "Industrial Waste Surcharge Information," "Basic Guidelines for Wastewater Sampling," and a "Extra Strength Surcharge Monitoring Report." These documents provide further information and instructions if you elect to conduct additional sampling. Should you have any questions, please call me at (314) 436-8716.

Sincerely,
METROPOLITAN ST. LOUIS SEWER DISTRICT

Darin Lewis
Environmental Engineering Associate

SP009

Sample Date	BOD (mg/L)	COD (mg/L)	TSS (mg/L)	Sample Taker
07/20/2007	18	57	15	IND
08/01/2007	82	248	87	MSD
10/31/2007	470	1,098	121	MSD
11/01/2007	96	216	58	IND
01/11/2008	122	252	177	IND
01/16/2008	88	237	53	MSD
04/17/2008	58	240	89	MSD
05/20/2008	29	108	6	IND
08/12/2008	246	496	41	IND
09/04/2008	98	316	34	MSD
11/19/2008	54	262	46	IND
12/03/2008	85	340	90	MSD
01/07/2009	95	226	61	IND
02/11/2009	134	433	48	MSD
04/28/2009	60	199	45	MSD

SP010

Sample Date	BOD (mg/L)	COD (mg/L)	TSS (mg/L)	Sample Taker
07/20/2007	260	593	19	IND
08/01/2007	334	930	126	MSD
10/31/2007	541	1,151	57	MSD
11/01/2007	782	1,410	76	IND
01/11/2008	506	849	50	IND
01/16/2008	642	1,300	49	MSD
04/17/2008	455	1,350	182	MSD
05/20/2008	456	788	30	IND
08/12/2008	394	1,070	154	IND
09/04/2008	92	314	38	MSD
11/19/2008	495	1,020	31	IND
12/03/2008	325	770	121	MSD
01/07/2009	417	1,030	43	IND
02/11/2009	546	1,165	230	MSD

bv
pc: Roland Biehl
FILE: IU, Mallinckrodt Inc, 2112059600

MEMO TO: Toni McGarry
Finance Department

FROM: Darin Lewis

DATE: July 6, 2009

SUBJECT: Surcharge Changes

We recommend that the new surcharge values below be applied to the following account effective July 2009.

Account No: **0118821-8**

Company: **MALLINCKRODT INC**

Premise: 3600 North 2nd Street
St. Louis, MO 63147

	TSS	BOD	COD
New Surcharge Values (mg/L):	83	431	947
Old Surcharge Values (mg/L):	199	368	905

This change was initiated by the District. These values were agreed to during a telephone conversation from Lisa Meyer of Mallinckrodt Inc on July 6, 2009. The surcharge values represent the average of 15 composite samples collected between July 20, 2007 and April 28, 2009.

Based on a wastewater discharge of 617,362 CCF, this equates to an estimated annual revenue increase to the District of $64,261.39.

If you have any questions, please call me at 436-8716.

pc: Roland Biehl
Doug Mendoza
Scott Rehmer

FILE: IU, Mallinckrodt Inc, 2112059600

EXTRA STRENGTH SURCHARGE REVIEW CHECKLIST

Reviewed by: D. Lewis Date: 5-28-09 Checked by: [illegible] Date: 3/24/09

Review PIMS, ECIS, industry file, and permit file.

1) Company name: Mallinckrodt Inc

2) Primary PIMS account number: 2112059600 and it's ECIS account number: 0118821-8

3) Premise address: 3600 N. 2nd Street St. Louis MO 63147

4) Is discharge greater than 60,000 gallon(80 CcF)/month, considering RF? ☑ Yes ☐ No
If no, take no further action.

5) Is company currently in surcharge? ☑ Yes ☐ No
If yes, last recertification date: 5-21-07 and do current surcharge values match ECIS, including related accounts? ☑ Yes ☐ No

If no, explain:

6) Reason for surcharge action: ☑ Bi-Annual Review ☐ Customer Requested ☐ Other

If other, comment:

7) Number of work shifts per day. Identify hours of work and brief process description:
1st: 7:00 AM 24 hours / 7 days FDA drugs
2nd: 3:20 PM Industrial Chemicals
3rd: 11:10 PM

8) Are sample collection times representative of facility work shifts? ☑ Yes ☐ No

If no, comment:

9) Update Surcharge status Log: ☑ Yes

10) New surcharge concentrations (mg/L): BOD 431 COD 947 TSS 83
Final surcharge concentrations (mg/L): BOD COD TSS
11) Old surcharge concentrations (mg/L): BOD 368 COD 905 TSS 199

12) Comment on changes in wastewater strength:

13) Send Notification letter to: Lisa Meyer

14) Other related sewer accounts to be billed surcharges: N/A

15) Waiting for IUQ? ☐ Yes ☐ No If surcharge is removed or decreased, check with DEC IU assigned inspector to review if we are waiting for an IUQ. We will refrain granting changes until IU provides the inspector with the required information.

16) Recertification Comments

17) Memo to Finance, date: 7-6-09

18) Enter final surcharge billing values into PIMS and Surcharge Log file, date: 7-6-09

19) Additional sample data forwarded to Pretreatment unit for PIMS entry: ☐ Yes ☑ N/A

Attachments
Surcharge calculation, first pass, all data dated: 5-26-09
Surcharge calculation, first pass, MSD data dated: ↓
Surcharge calculation, first pass, IND data dated: ↓
Surcharge calculation, final data dated:
MSD letters, dated:
Industry letters, dated:
Other:

FILE: IU

Rev 5/07 rab O:\CostRecovery\Surcharge\ES Checklist.DOC

SURCHARGE CALCULATOR

Date:5/26/2009

File:o:\envcom\surcharg\2112059600-2009.xls

Sum of Discharge Factors: 1.00

Sampling Point: 001 — Discharge factor: 0.00 — Flow: 1000 GPD

	Date	Start Time	Type	End Time	24 hr	BOD (mg/L)	COD (mg/L)	TSS (mg/L)	Day	Sampler
1	08/01/2007	N/A			yes	10	39	6	4	MSD
2	10/31/2007	N/A			yes	8	39	6	4	MSD
3	01/16/2008	N/A			yes	8	37	5	4	MSD
4	04/16/2008	N/A			yes	4	100	196	4	MSD
5	09/04/2008	9.35		9.35	N/A	10	37	108	5	MSD
6	12/03/2008	9.22		9.22	N/A	21	37	45	4	MSD
7	02/11/2009	9.06		9.06	N/A	4	27	9	4	MSD
8		N/A			N/A				N/A	
9		N/A			N/A				N/A	
10		N/A			N/A				N/A	
11		N/A			N/A				N/A	
12		N/A			N/A				N/A	
13		N/A			N/A				N/A	
14		N/A			N/A				N/A	
15		N/A			N/A				N/A	
16		N/A			N/A				N/A	
17		N/A			N/A				N/A	
18		N/A			N/A				N/A	
19		N/A			N/A				N/A	
20		N/A			N/A				N/A	
					Total:	65	316	375		
					Average:	9	45	54		
					Weighted Average:	0	0	0		

1=Sun, 2=Mon, 3=Tue, 4=Wed, 5=Thur, 6=Fri, 7=Sat

Sampling Point: 002 — Discharge factor: 0.00 — Flow: 2200 GPD

	Date	Start Time	Type	End Time	24 hr	BOD (mg/L)	COD (mg/L)	TSS (mg/L)	Day	Sampler
1	08/01/2007	N/A			yes	155	496	127	4	MSD
2	10/31/2007	N/A			yes	168	440	146	4	MSD
3	01/16/2008	N/A			yes	332	740	372	4	MSD
4	04/16/2008	N/A			yes	246	568	243	4	MSD
5	09/04/2008	N/A			yes	318	684	373	5	MSD
6	12/03/2008	N/A			yes	124	354	77	4	MSD
7	02/11/2009	N/A			yes	46	187	33	4	MSD
8	04/28/2009	N/A			yes	53	149	72	3	MSD
9		N/A			N/A				N/A	
10		N/A			N/A				N/A	
11		N/A			N/A				N/A	
12		N/A			N/A				N/A	
13		N/A			N/A				N/A	
14		N/A			N/A				N/A	
15		N/A			N/A				N/A	
16		N/A			N/A				N/A	
17		N/A			N/A				N/A	
18		N/A			N/A				N/A	
19		N/A			N/A				N/A	
20		N/A			N/A				N/A	
					Total:	1442	3618	1443		
					Average:	180	452	180		
					Weighted Average:	0	0	0		

Sampling Point: 003 — Discharge factor: 0.02 — Flow: #### GPD

	Date	Start Time	Type	End Time	24 hr	BOD (mg/L)	COD (mg/L)	TSS (mg/L)	Day	Sampler
1	07/20/2007	6.20	4.00	10.20	N/A	32	87	32	6	IND
2	08/01/2007	N/A			yes	24	77	29	4	MSD
3	10/31/2007	N/A			yes	221	538	46	4	MSD
4	11/01/2007	7.30	3.00	10.30	N/A	224	324	76	5	IND
5	01/11/2008	7.50	3.00	10.50	N/A	142	50	50	6	IND
6	01/16/2008	N/A			yes	75	231	66	4	MSD
7	04/16/2008	8.50		8.50	N/A	80	192	44	4	MSD
8	05/20/2008	6.30	4.00	10.30	N/A	56	160	36	3	IND
9	08/12/2008	5.48	4.00	9.48	N/A	154	362	189	3	IND
10	09/04/2008	N/A			yes	32	109	25	5	MSD
11	11/19/2008	7.20	4.00	11.20	N/A	125	440	50	4	IND
12	12/03/2008	N/A			yes	85	279	67	4	MSD
13	01/07/2009	6.30	4.00	10.30	N/A	138	290	63	4	IND
14	02/11/2009	N/A			yes	54	197	47	4	MSD
15	04/28/2009	N/A			yes	40	138	57	3	MSD
16		N/A			N/A				N/A	
17		N/A			N/A				N/A	
18		N/A			N/A				N/A	
19		N/A			N/A				N/A	
20		N/A			N/A				N/A	
					Total:	1482	3474	877		
					Average:	99	232	58		
					Weighted Average:	2	5	1		

General Information:

Calculated by:	Darin Lewis
Facility name:	Mallinckrodt Inc
Account No:	2112059600
Last recertification date:	5/21/2007

Volume:

First meter reading date:	3/14/2008
Last meter reading date:	3/9/2009
Total Volume:	634276.1 CcF
RF:	0.96
Annualized volume:	617362 CcF
Monthly volume:	51447 CcF

Surcharge Values:

	Previous	New
BOD:	368 mg/L	431 mg/L
COD:	905 mg/L	947 mg/L
TSS:	199 mg/L	83 mg/L

Surcharge Calculations:

BOD in normal wastewater:	300 mg/L		
COD in normal wastewater:	600 mg/L		
TSS in normal wastewater:	300 mg/L		
		Ordiannce:	12561
Current BOD rate:	$ 529.56 / ton	Effective:	1/1/2008
Current COD rate:	$ 264.78 / ton	Effective:	1/1/2008
Current TSS rate:	$ 218.90 / ton	Effective:	1/1/2008

Conversion factor (mg/L to tons/CcF): 1.926

	Previous	New
Estimated BOD surcharge:	$ 69,361.50	$ 133,622.89
Estimated COD surcharge:	$ 155,553.36	$ 176,973.83
Estimated TSS surcharge:	$ -	$ -
BOD/COD:	0.41	0.46

Use zero if BOD or COD = zero

	Previous	New	Change
Estimated annual surcharge:	**$ 69,361.50**	**$ 133,622.89**	**$ 64,261.39**

Comments: 7609

Lisa Meyer agreed to new surcharge averages.

Water Consumption Data:	Reading Date	Consumption
	3/9/2009	176416.1
First pass calculation, all data: ☑	12/17/2008	126337.7
First pass calculation, MSD data: ☐	9/15/2008	86843.3
First pass calculation, IND data: ☐	6/16/2008	244679
Calculation, final data: ☐	3/14/2008	

Total = 634276.1

INTERNAL DOCUMENT-DO NOT MAIL

SURCHARGE CALCULATOR

Date:5/26/2009
File:o:\envcom\surcharg\2112059600-2009.xls

Calculated by:	Darin Lewis
Facility name:	Mallinckrodt Inc
Account No:	2112059600
Last recertification date:	39223

Sampling Point:	005			Discharge factor:		0.01	Flow:	####	GPD
	Date	Start Time	Type	End Time	24 hr	BOD (mg/L)	COD (mg/L)	TSS (mg/L)	Day	Sampler
1	07/20/2007	6.35	4.00	10.35	N/A	38	92	6	6	IND
2	08/01/2007	N/A			yes	13	49	1	4	MSD
3	10/31/2007	N/A			yes	153	662	3	4	MSD
4	11/01/2007	7.45	3.00	10.45	N/A	50	135	17	5	IND
5	01/11/2008	8.05	3.00	11.05	N/A	28	27	5	6	IND
6	01/16/2008	N/A			yes	63	141	3	4	MSD
7	04/16/2008	N/A			yes	45	98	9	4	MSD
8	05/20/2008	6.40	4.00	10.40	N/A	39	42	37	3	IND
9	08/12/2008	6.00	4.00	10.00	N/A	625	358	24	3	IND
10	09/04/2008	N/A			yes	26	59	1	5	MSD
11	11/19/2008	7.35	4.00	11.35	N/A	658	1150	13	4	IND
12	12/03/2008	N/A			yes	70	168	8	4	MSD
13	01/07/2009	6.25	5.00	11.25	N/A	29	157	6	4	IND
14	02/11/2009	N/A			yes	55	123	1	4	MSD
15	04/28/2009	N/A			yes	51	105	2	3	MSD
16		N/A			N/A				N/A	
17		N/A			N/A				N/A	
18		N/A			N/A				N/A	
19		N/A			N/A				N/A	
20		N/A			N/A				N/A	
					Total:	1943	3366	136		
					Average:	130	224	9		
					Weighted Average:	1	2	0		

1=Sun, 2=Mon, 3=Tue, 4=Wed, 5=Thur, 6=Fri, 7=Sat

Sampling Point:	009			Discharge factor:		0.00	Flow:	####	GPD
	Date	Start Time	Type	End Time	24 hr	BOD (mg/L)	COD (mg/L)	TSS (mg/L)	Day	Sampler
1	07/20/2007	7.00	4.00	11.00	N/A	18	57	15	6	IND
2	08/01/2007	N/A			yes	82	248	87	4	MSD
3	10/31/2007	N/A			yes	470	1098	121	4	MSD
4	11/01/2007	8.00	3.00	11.00	N/A	96	216	58	5	IND
5	01/11/2008	8.20	3.00	11.20	N/A	122	252	177	6	IND
6	01/16/2008	N/A			yes	88	237	53	4	MSD
7	04/17/2008	N/A			yes	58	240	89	5	MSD
8	05/20/2008	7.00	4.00	11.00	N/A	29	108	6	3	IND
9	08/12/2008	6.15	4.00	10.15	N/A	246	496	41	3	IND
10	09/04/2008	N/A			yes	98	316	34	5	MSD
11	11/19/2008	7.50	4.00	11.50	N/A	54	262	46	4	IND
12	12/03/2008	N/A			yes	85	340	90	4	MSD
13	01/07/2009	7.50	4.00	11.50	N/A	95	226	61	4	IND
14	02/11/2009	N/A			yes	134	433	48	4	MSD
15	04/28/2009	N/A			yes	60	199	45	3	MSD
16		N/A			N/A				N/A	
17		N/A			N/A				N/A	
18		N/A			N/A				N/A	
19		N/A			N/A				N/A	
20		N/A			N/A				N/A	
					Total:	1735	4728	971		
					Average:	116	315	65		
					Weighted Average:	1	1	0		

Sampling Point:	010			Discharge factor:		0.96	Flow:	####	GPD
	Date	Start Time	Type	End Time	24 hr	BOD (mg/L)	COD (mg/L)	TSS (mg/L)	Day	Sampler
1	07/20/2007	7.20	4.00	11.20	N/A	260	593	19	6	IND
2	08/01/2007	N/A			yes	334	930	126	4	MSD
3	10/31/2007	N/A			yes	541	1151	57	4	MSD
4	11/01/2007	8.21	3.00	11.21	N/A	782	1410	76	5	IND
5	01/11/2008	8.40	3.00	11.40	N/A	506	849	50	6	IND
6	01/16/2008	N/A			yes	642	1300	49	4	MSD
7	04/17/2008	N/A			yes	455	1350	182	5	MSD
8	05/20/2008	7.15	4.00	11.15	N/A	456	788	30	3	IND
9	08/12/2008	6.30	4.00	10.30	N/A	394	1070	154	3	IND
10	09/04/2008	N/A			yes	92	314	38	5	MSD
11	11/19/2008	8.00	4.00	12.00	N/A	495	1020	31	4	IND
12	12/03/2008	N/A			yes	325	770	121	4	MSD
13	01/07/2009	7.05	4.00	11.05	N/A	417	1030	43	4	IND
14	02/11/2009	N/A			yes	546	1165	230	4	MSD
15										
16		N/A			N/A				N/A	
17		N/A			N/A				N/A	
18		N/A			N/A				N/A	
19		N/A			N/A				N/A	
20		N/A			N/A				N/A	
					Total:	6245	13740	1206		
					Average:	446	981	86		
					Weighted Average:	427	939	82		

SURCHARGE CALCULATOR

Date:5/26/2009

File:o:\envcom\surcharg\2112059600-2009.xls

Sum of Discharge Factors: 1.00

Sampling Point: 001				Discharge factor: 0.00			Flow: 1000 GPD	
	Date	Start Time	Type	End Time	24 hr	BOD (mg/L)	COD (mg/L)	TSS (mg/L)	Day	Sampler
1	08/01/2007	N/A			yes	10	39	6	4	MSD
2	10/31/2007	N/A			yes	8	39	6	4	MSD
3	01/16/2008	N/A			yes	8	37	5	4	MSD
4	04/16/2008	N/A			yes	4	100	196	4	MSD
5	09/04/2008	9.35		9.35	N/A	10	37	108	5	MSD
6	12/03/2008	9.22		9.22	N/A	21	37	45	4	MSD
7	02/11/2009	9.06		9.06	N/A	4	27	9	4	MSD
8		N/A			N/A				N/A	
9		N/A			N/A				N/A	
10		N/A			N/A				N/A	
11		N/A			N/A				N/A	
12		N/A			N/A				N/A	
13		N/A			N/A				N/A	
14		N/A			N/A				N/A	
15		N/A			N/A				N/A	
16		N/A			N/A				N/A	
17		N/A			N/A				N/A	
18		N/A			N/A				N/A	
19		N/A			N/A				N/A	
20		N/A			N/A				N/A	
					Total:	65	316	375		
					Average:	9	45	54		
					Weighted Average:	0	0	0		

1=Sun, 2=Mon, 3=Tue, 4=Wed, 5=Thur, 6=Fri, 7=Sat

Sampling Point: 002				Discharge factor: 0.00			Flow: 2200 GPD	
	Date	Start Time	Type	End Time	24 hr	BOD (mg/L)	COD (mg/L)	TSS (mg/L)	Day	Sampler
1	08/01/2007	N/A			yes	155	496	127	4	MSD
2	10/31/2007	N/A			yes	168	440	146	4	MSD
3	01/16/2008	N/A			yes	332	740	372	4	MSD
4	04/16/2008	N/A			yes	246	568	243	4	MSD
5	09/04/2008	N/A			yes	318	684	373	5	MSD
6	12/03/2008	N/A			yes	124	354	77	4	MSD
7	02/11/2009	N/A			yes	46	187	33	4	MSD
8	04/28/2009	N/A			yes	53	149	72	3	MSD
9		N/A			N/A				N/A	
10		N/A			N/A				N/A	
11		N/A			N/A				N/A	
12		N/A			N/A				N/A	
13		N/A			N/A				N/A	
14		N/A			N/A				N/A	
15		N/A			N/A				N/A	
16		N/A			N/A				N/A	
17		N/A			N/A				N/A	
18		N/A			N/A				N/A	
19		N/A			N/A				N/A	
20		N/A			N/A				N/A	
					Total:	1442	3618	1443		
					Average:	180	452	180		
					Weighted Average:	0	0	0		

Sampling Point: 003				Discharge factor: 0.02			Flow: #### GPD	
	Date	Start Time	Type	End Time	24 hr	BOD (mg/L)	COD (mg/L)	TSS (mg/L)	Day	Sampler
1										
2	08/01/2007	N/A			yes	24	77	29	4	MSD
3	10/31/2007	N/A			yes	221	538	46	4	MSD
4										
5										
6	01/16/2008	N/A			yes	75	231	66	4	MSD
7	04/16/2008	8.50		8.50	N/A	80	192	44	4	MSD
8										
9										
10	09/04/2008	N/A			yes	32	109	25	5	MSD
11										
12	12/03/2008	N/A			yes	85	279	67	4	MSD
13										
14	02/11/2009	N/A			yes	54	197	47	4	MSD
15	04/28/2009	N/A			yes	40	138	57	3	MSD
16		N/A			N/A				N/A	
17		N/A			N/A				N/A	
18		N/A			N/A				N/A	
19		N/A			N/A				N/A	
20		N/A			N/A				N/A	
					Total:	611	1761	381		
					Average:	76	220	48		
					Weighted Average:	2	5	1		

General Information:

Calculated by:	Darin Lewis
Facility name:	Mallinckldt Inc
Account No:	2112059600
Last recertification date:	5/21/2007

Volume:

First meter reading date:	3/14/2008
Last meter reading date:	3/9/2009
Total Volume:	634276.1 CcF
RF:	0.96
Annualized volume:	617362 CcF
Monthly volume:	51447 CcF

Surcharge Values:

	Previous	New
BOD:	368 mg/L	405 mg/L
COD:	905 mg/L	963 mg/L
TSS:	199 mg/L	111 mg/L

Surcharge Calculations:

BOD in normal wastewater:	300 mg/L			
COD in normal wastewater:	600 mg/L			
TSS in normal wastewater:	300 mg/L			
			Ordiannce:	12561
Current BOD rate:	$ 529.56 / ton		Effective:	1/1/2008
Current COD rate:	$ 264.78 / ton		Effective:	1/1/2008
Current TSS rate:	$ 218.90 / ton		Effective:	1/1/2008

Conversion factor (mg/L to tons/CcF): 1.926

	Previous	New
Estimated BOD surcharge:	$ 69,361.50	$ 107,102.32
Estimated COD surcharge:	$ 155,553.36	$ 185,134.00
Estimated TSS surcharge:	$ -	$ -
BOD/COD:	0.41	0.42

Use zero if BOD or COD = zero

	Previous	New	Change
Estimated annual surcharge:	$ 69,361.50	$ 107,102.32	$ 37,740.82

Comments:

Water Consumption Data:

Reading Date	Consumption
3/9/2009	176416.1
12/17/2008	126337.7
9/15/2008	86843.3
6/16/2008	244679
3/14/2008	

First pass calculation, all data: ☐
First pass calculation, MSD data: ☑
First pass calculation, IND data: ☐
Calculation, final data: ☐

Total = 634276.1

INTERNAL DOCUMENT-DO NOT MAIL

MSD 012267

SURCHARGE CALCULATOR

Date:5/26/2009
File:o:\envcom\surcharg\2112059600-2009.xls

Calculated by:	Darin Lewis
Facility name:	Mallinckrodt Inc
Account No:	2112059600
Last recertification date:	39223

Sampling Point: 005 Discharge factor: 0.01 Flow: #### GPD

	Date	Start Time	Type	End Time	24 hr	BOD (mg/L)	COD (mg/L)	TSS (mg/L)	Day	Sampler
1										
2	08/01/2007	N/A			yes	13	49	1	4	MSD
3	10/31/2007	N/A			yes	153	662	3	4	MSD
4										
5										
6	01/16/2008	N/A			yes	63	141	3	4	MSD
7	04/16/2008	N/A			yes	45	98	9	4	MSD
8										
9										
10	09/04/2008	N/A			yes	26	59	1	5	MSD
11										
12	12/03/2008	N/A			yes	70	168	8	4	MSD
13										
14	02/11/2009	N/A			yes	55	123	1	4	MSD
15	04/28/2009	N/A			yes	51	105	2	3	MSD
16		N/A			N/A				N/A	
17		N/A			N/A				N/A	
18		N/A			N/A				N/A	
19		N/A			N/A				N/A	
20		N/A			N/A				N/A	
					Total:	476	1405	28		
					Average:	60	176	4		
					Weighted Average:	1	2	0		

1=Sun, 2=Mon, 3=Tue, 4=Wed, 5=Thur, 6=Fri, 7=Sat

Sampling Point: 009 Discharge factor: 0.00 Flow: #### GPD

	Date	Start Time	Type	End Time	24 hr	BOD (mg/L)	COD (mg/L)	TSS (mg/L)	Day	Sampler
1										
2	08/01/2007	N/A			yes	82	248	87	4	MSD
3	10/31/2007	N/A			yes	470	1098	121	4	MSD
4										
5										
6	01/16/2008	N/A			yes	88	237	53	4	MSD
7	04/17/2008	N/A			yes	58	240	89	5	MSD
8										
9										
10	09/04/2008	N/A			yes	98	316	34	5	MSD
11										
12	12/03/2008	N/A			yes	85	340	90	4	MSD
13										
14	02/11/2009	N/A			yes	134	433	48	4	MSD
15	04/28/2009	N/A			yes	60	199	45	3	MSD
16		N/A			N/A				N/A	
17		N/A			N/A				N/A	
18		N/A			N/A				N/A	
19		N/A			N/A				N/A	
20		N/A			N/A				N/A	
					Total:	1075	3111	567		
					Average:	134	389	71		
					Weighted Average:	1	2	0		

Sampling Point: 010 Discharge factor: 0.96 Flow: #### GPD

	Date	Start Time	Type	End Time	24 hr	BOD (mg/L)	COD (mg/L)	TSS (mg/L)	Day	Sampler
1										
2	08/01/2007	N/A			yes	334	930	126	4	MSD
3	10/31/2007	N/A			yes	541	1151	57	4	MSD
4										
5										
6	01/16/2008	N/A			yes	642	1300	49	4	MSD
7	04/17/2008	N/A			yes	455	1350	182	5	MSD
8										
9										
10	09/04/2008	N/A			yes	92	314	38	5	MSD
11										
12	12/03/2008	N/A			yes	325	770	121	4	MSD
13										
14	02/11/2009	N/A			yes	546	1165	230	4	MSD
15										
16		N/A			N/A				N/A	
17		N/A			N/A				N/A	
18		N/A			N/A				N/A	
19		N/A			N/A				N/A	
20		N/A			N/A				N/A	
					Total:	2935	6980	803		
					Average:	419	997	115		
					Weighted Average:	401	954	110		

SURCHARGE CALCULATOR

Date:5/26/2009
File:o:\envcom\surcharg\2112059600-2009.xls

Sum of Discharge Factors: 1.00

Sampling Point: 001 Discharge factor: 0.00 Flow: 1000 GPD

	Date	Start Time	Type	End Time	24 hr	BOD (mg/L)	COD (mg/L)	TSS (mg/L)	Day	Sampler
1										
2										
3										
4										
5										
6										
7										
8		N/A			N/A				N/A	
9		N/A			N/A				N/A	
10		N/A			N/A				N/A	
11		N/A			N/A				N/A	
12		N/A			N/A				N/A	
13		N/A			N/A				N/A	
14		N/A			N/A				N/A	
15		N/A			N/A				N/A	
16		N/A			N/A				N/A	
17		N/A			N/A				N/A	
18		N/A			N/A				N/A	
19		N/A			N/A				N/A	
20		N/A			N/A				N/A	
					Total:	0	0	0		
					Average:	0	0	0		
					Weighted Average:	0	0	0		

1=Sun, 2=Mon, 3=Tue, 4=Wed, 5=Thur, 6=Fri, 7=Sat

Sampling Point: 002 Discharge factor: 0.00 Flow: 2200 GPD

	Date	Start Time	Type	End Time	24 hr	BOD (mg/L)	COD (mg/L)	TSS (mg/L)	Day	Sampler
1										
2										
3										
4										
5										
6										
7										
8										
9		N/A			N/A				N/A	
10		N/A			N/A				N/A	
11		N/A			N/A				N/A	
12		N/A			N/A				N/A	
13		N/A			N/A				N/A	
14		N/A			N/A				N/A	
15		N/A			N/A				N/A	
16		N/A			N/A				N/A	
17		N/A			N/A				N/A	
18		N/A			N/A				N/A	
19		N/A			N/A				N/A	
20		N/A			N/A				N/A	
					Total:	0	0	0		
					Average:	0	0	0		
					Weighted Average:	0	0	0		

Sampling Point: 003 Discharge factor: 0.02 Flow: #### GPD

	Date	Start Time	Type	End Time	24 hr	BOD (mg/L)	COD (mg/L)	TSS (mg/L)	Day	Sampler
1	07/20/2007	6.20	4.00	10.20	N/A	32	87	32	6	IND
2										
3										
4	11/01/2007	7.30	3.00	10.30	N/A	224	324	76	5	IND
5	01/11/2008	7.50	3.00	10.50	N/A	142	50	50	6	IND
6										
7										
8	05/20/2008	6.30	4.00	10.30	N/A	56	160	36	3	IND
9	08/12/2008	5.48	4.00	9.48	N/A	154	362	189	3	IND
10										
11	11/19/2008	7.20	4.00	11.20	N/A	125	440	50	4	IND
12										
13	01/07/2009	6.30	4.00	10.30	N/A	138	290	63	4	IND
14										
15										
16		N/A			N/A				N/A	
17		N/A			N/A				N/A	
18		N/A			N/A				N/A	
19		N/A			N/A				N/A	
20		N/A			N/A				N/A	
					Total:	871	1713	496		
					Average:	124	245	71		
					Weighted Average:	3	6	2		

General Information:

Calculated by:	Darin Lewis
Facility name:	Mallinckrodt Inc
Account No:	2112059600 /
Last recertification date:	5/21/2007

Volume:

First meter reading date:	3/14/2008
Last meter reading date:	3/9/2009
Total Volume:	634276.1 CcF
RF:	0.96
Annualized volume:	617362 CcF
Monthly volume:	51447 CcF

Surcharge Values:

	Previous	New
BOD:	368 mg/L	458 mg/L
COD:	905 mg/L	935 mg/L
TSS:	199 mg/L	58 mg/L

Surcharge Calculations:

BOD in normal wastewater:	300 mg/L		
COD in normal wastewater:	600 mg/L		
TSS in normal wastewater:	300 mg/L		
		Ordiannce:	12561
Current BOD rate:	$ 529.56 / ton	Effective:	1/1/2008
Current COD rate:	$ 264.78 / ton	Effective:	1/1/2008
Current TSS rate:	$ 218.90 / ton	Effective:	1/1/2008

Conversion factor (mg/L to tons/CcF): 1.926

	Previous	New
Estimated BOD surcharge:	$ 69,361.50	$ 161,163.48
Estimated COD surcharge:	$ 155,553.36	$ 170,853.69
Estimated TSS surcharge:	$ -	$ -
BOD/COD:	0.41	0.49

Use zero if BOD or COD = zero

	Previous	New	Change
Estimated annual surcharge:	$ 69,361.50	$ 161,163.48	$ 91,801.98

Comments:

Water Consumption Data:	Reading Date	Consumption
	3/9/2009	176416.1
First pass calculation, all data: ☐	12/17/2008	126337.7
First pass calculation, MSD data: ☐	9/15/2008	86843.3
First pass calculation, IND data: ☑	6/16/2008	244679
Calculation, final data: ☐	3/14/2008	

Total = 634276.1

SURCHARGE CALCULATOR

Date:5/26/2009
File:o:\envcom\surcharg\2112059600-2009.xls

Calculated by:	Darin Lewis
Facility name:	Mallinckrodt Inc
Account No:	2112059600
Last recertification date:	39223

Sampling Point: 005 Discharge factor: 0.01 Flow: #### GPD

	Date	Start Time	Type	End Time	24 hr	BOD (mg/L)	COD (mg/L)	TSS (mg/L)	Day	Sampler
1	07/20/2007	6.35	4.00	10.35	N/A	38	92	6	6	IND
2										
3										
4	11/01/2007	7.45	3.00	10.45	N/A	50	135	17	5	IND
5	01/11/2008	8.05	3.00	11.05	N/A	28	27	5	6	IND
6										
7										
8	05/20/2008	6.40	4.00	10.40	N/A	39	42	37	3	IND
9	08/12/2008	6.00	4.00	10.00	N/A	625	358	24	3	IND
10										
11	11/19/2008	7.35	4.00	11.35	N/A	658	1150	13	4	IND
12										
13	01/07/2009	6.25	5.00	11.25	N/A	29	157	6	4	IND
14										
15										
16		N/A			N/A				N/A	
17		N/A			N/A				N/A	
18		N/A			N/A				N/A	
19		N/A			N/A				N/A	
20		N/A			N/A				N/A	
					Total:	1467	1961	108		
					Average:	210	280	15		
					Weighted Average:	2	3	0		

1=Sun, 2=Mon, 3=Tue, 4=Wed, 5=Thur, 6=Fri, 7=Sat

Sampling Point: 009 Discharge factor: 0.00 Flow: #### GPD

	Date	Start Time	Type	End Time	24 hr	BOD (mg/L)	COD (mg/L)	TSS (mg/L)	Day	Sampler
1	07/20/2007	7.00	4.00	11.00	N/A	18	57	15	6	IND
2										
3										
4	11/01/2007	8.00	3.00	11.00	N/A	96	216	58	5	IND
5	01/11/2008	8.20	3.00	11.20	N/A	122	252	177	6	IND
6										
7										
8	05/20/2008	7.00	4.00	11.00	N/A	29	108	6	3	IND
9	08/12/2008	6.15	4.00	10.15	N/A	246	496	41	3	IND
10										
11	11/19/2008	7.50	4.00	11.50	N/A	54	262	46	4	IND
12										
13	01/07/2009	7.50	4.00	11.50	N/A	95	226	61	4	IND
14										
15										
16		N/A			N/A				N/A	
17		N/A			N/A				N/A	
18		N/A			N/A				N/A	
19		N/A			N/A				N/A	
20		N/A			N/A				N/A	
					Total:	660	1617	404		
					Average:	94	231	58		
					Weighted Average:	0	1	0		

Sampling Point: 010 Discharge factor: 0.96 Flow: #### GPD

	Date	Start Time	Type	End Time	24 hr	BOD (mg/L)	COD (mg/L)	TSS (mg/L)	Day	Sampler
1	07/20/2007	7.20	4.00	11.20	N/A	260	593	19	6	IND
2										
3										
4	11/01/2007	8.21	3.00	11.21	N/A	782	1410	76	5	IND
5	01/11/2008	8.40	3.00	11.40	N/A	506	849	50	6	IND
6										
7										
8	05/20/2008	7.15	4.00	11.15	N/A	456	788	30	3	IND
9	08/12/2008	6.30	4.00	10.30	N/A	394	1070	154	3	IND
10										
11	11/19/2008	8.00	4.00	12.00	N/A	495	1020	31	4	IND
12										
13	01/07/2009	7.05	4.00	11.05	N/A	417	1030	43	4	IND
14										
15										
16		N/A			N/A				N/A	
17		N/A			N/A				N/A	
18		N/A			N/A				N/A	
19		N/A			N/A				N/A	
20		N/A			N/A				N/A	
					Total:	3310	6760	403		
					Average:	473	966	58		
					Weighted Average:	453	925	56		

Darin Lewis

From: Toni McGarry
To: Darin Lewis
Sent: Monday, July 06, 2009 1:15 PM
Subject: Read: Mallinckrodt surcharge finance memo

Your message

To: Doug Mendoza; Roland Biehl; Scott Rehmer; Toni McGarry
Subject: Mallinckrodt surcharge finance memo
Sent: 7/6/2009 1:13 PM

was read on 7/6/2009 1:15 PM.