Interpoll Laboratories, Inc.
4500 Ball Road N.E.
Circle Pines, Minnesota 55014-1819

TEL: (763) 786-6020
FAX: (763) 786-7854

RESULTS OF THE JULY 23-24, 2013 RELATIVE ACCURACY TEST AUDIT OF THE $CO/SO_2/NO_x/CO_2$/FLOW CEM SYSTEM INSTALLED ON THE NO. 9 BOILER OUTLET DUCT AT THE MANITOWOC PUBLIC UTILITIES FACILITY IN MANITOWOC, WISCONSIN

Submitted to:

Mechanical Systems Inc.
480 Progress Way
Sun Prairie, WI 53590

Attention:

Rocky Orzechowski

Reviewed by:

Kathleen Eickstadt

Kathleen Eickstadt
Coordinator
Source Testing

Report Number 13-32333(No. 9)
August 19, 2013
DVH

TABLE OF CONTENTS

ABBREVIATIONS iii

1 INTRODUCTION 1

2 SUMMARY AND DISCUSSION 2

APPENDICES:

A - Sampling Train Calibration Data
B - Field Data Sheets
C - Reference Method Computer Printouts
D - Measurement Systems Performance Specifications
E - Calibration Gas Certification Sheets
F - Gas Analyzer Specifications
G - CEM Instrument Information Sheets
H - CEM Computer Printouts
I - Procedures
J - Calculation Equations
K - AETB Requirements

MPU03443

ABBREVIATIONS

ACFM	actual cubic feet per minute
cc (ml)	cubic centimeter (milliliter)
DSCFM	dry standard cubic foot of dry gas per minute
DSML	dry standard milliliter
DEG-F (°F)	degrees Fahrenheit
DIA.	Diameter
FT/SEC	feet per second
g	gram
GPM	gallons per minute
GR/ACF	grains per actual cubic foot
GR/DSCF	grains per dry standard cubic foot
g/dscm	grams per dry standard meter
HP	horsepower
HRS	hours
IN.	inches
IN.HG.	inches of mercury
IN.WC.	inches of water
LB	pound
LB/DSCF	pounds per dry standard cubic foot
LB/HR	pounds per hour
LB/10^6BTU	pounds per million British Thermal Units heat input
LB/MMBTU	pounds per million British Thermal Units heat input
MW	megawatt
mg/dscm	milligrams per dry standard cubic meter
ug/dscm	micrograms per dry standard cubic meter
microns (um)	micrometer
MIN.	minutes
ng	nanograms
PM	particulate matter
PPH	pounds per hour
PPM	parts per million
ppmC	parts per million carbon
ppm,d	parts per million, dry
ppm,w	parts per million, wet
ppt	parts per trillion
PSI	pounds per square inch
SQ.FT.	square feet
TPD	tons per day
ug	micrograms
v/v	percent by volume
w/w	percent by weight

Standard conditions are defined as 68 °F (20 °C) and 29.92 IN. of mercury pressure

1 INTRODUCTION

On July 23-24, 2013, Interpoll Laboratories personnel conducted a Relative Accuracy Test Audit (RATA) on the following Continuous Emission Monitoring (CEM) System installed on the Boiler 9 Outlet Duct at the Manitowoc Public Utilities Facility in Manitowoc, Wisconsin:

Monitor Type	Manufacturer	Model	Serial No.	Location
SO2	Thermo Electron	43i	43i0510511567	No. 9 Boiler
NOx	Thermo Electron	42i	42i0510511561	No. 9 Boiler
CO2	Thermo Electron	41i	410i0510511584	No. 9 Boiler
CO	Thermo Electron	48i	48i0510511587	No. 9 Boiler
Flow	United Sciences	150	1500188	No. 9 Boiler

On-site testing was performed by Aaron Wilson and Nate Beinemann. Coordination between testing activities and plant operation was provided by Jim Fanning of Mechanical Systems, Inc and Tim Harding of Manitowoc Public Utilities. The test was not witnessed by a representative of the Wisconsin Department of Natural Resources.

The RATA was performed in accordance with EPA Methods 3A, 6C, 7E and 10, CFR Title 40, Part 60, Appendix A (revised July 1, 2013) and per Part 75. For oxygen analysis, a slip stream of sample gas was withdrawn from the exhaust gas stream using test ports on the stack adjacent to the CEMS using a heat-traced probe and filter assembly. After passing through the filter, the gas passed through two condenser-type moisture removal systems operating in series. The particulate-free dry gas was then transported to the oxygen analyzer with the excess exhausted to the atmosphere through a calibrated orifice, which was used to ensure that the flow from the stack exceeds the requirements of the analyzer. For CO, SO_2, NO_x, and CO_2 analysis, a dilution probe based system was used. In this system a slipstream of exhaust gas is drawn from the exhaust gas stream using an M&C dilution probe. The sample stream is filtered and diluted (approximate dilution during these tests was 100:1) before delivery to the analyzers. The analog response of the analyzers in both systems was recorded using a computer data logger. The analyzers were calibrated with EPA Protocol gases.

MPU03445

The important results of the test are summarized in the following tables. Field data and all other supporting information are presented in the appendices.

MPU03446

2 SUMMARY AND DISCUSSION

The results of the Relative Accuracy Test Audit are summarized in the following tables. An overview of the results is presented below:

NO. 9 BOILER RELATIVE ACCURACY RESULTS

Parameter	Units	Measured
NO_x	LB/10^6BTU	6.77
NO_x	ppm,w	3.69
SO_2	ppm,w	6.03
SO_2	LB/10^6BTU	8.63
CO_2	% v/v,w	1.43
Flow (low)	SCFH	1.35
Flow (mid)	SCFH	2.98
CO	ppm,w	1.11
CO	LB/10^6BTU	1.03

No difficulties were encountered in the field or in the evaluation of the data. On the basis of these facts and a complete review of the data and results, it is our opinion that the CO_2, SO_2 and NO_x concentrations reported herein are accurate and closely reflect the actual values, which existed at the time the test was performed.

MPU03447

Summary of the Results of the July 23-24, 2013, Relative Accuracy Test Audit of the NOx Analyzer Installed on the No. 9 Boiler Breeching at the Manitowoc Public Utilities Plant located in Manitowoc, Wisconsin.

177 Klbs/Hr

						Nox Lbs/mmBTU		
Run		**Date**	**Time**			**RM**	**CEM**	**DIFF.**
1	*	7/23-24/2013	21:15	-	21:35	0.128	0.118	0.010
2		7/23-24/2013	21:45	-	22:05	0.133	0.124	0.009
3		7/23-24/2013	22:15	-	22:35	0.114	0.108	0.006
4		7/23-24/2013	22:45	-	23:05	0.129	0.124	0.005
5		7/23-24/2013	23:15	-	23:35	0.122	0.114	0.008
6		7/23-24/2013	23:45	-	0:05	0.125	0.117	0.008
7		7/23-24/2013	0:20	-	0:40	0.108	0.102	0.006
8		7/23-24/2013	12:50	-	1:10	0.127	0.120	0.007
9		7/23-24/2013	1:20	-	1:40	0.148	0.140	0.008
10		7/23-24/2013	1:50	-	2:10	0.152	0.144	0.008
Average Diff.						0.129	0.122	0.007470
Standard Deviation								0.002
Confidence Coefficient								0.001271
Relative Accuracy								6.77
Bias Test								Fail
Bias Adjustment Factor								1.061

* Run was not used in Relative Accuracy calculation

RM = Reference Method

CEM = Continuous Emission Monitor

Summary of the Results of the July 23-24, 2013, Relative Accuracy Test Audit of the NOx Analyzer Installed on the No. 9 Boiler Breeching at the Manitowoc Public Utilities Plant located in Manitowoc, Wisconsin.

177 Klbs/Hr

				Nox ppm, wet		
Run		**Date**	**Time**	**RM**	**CEM**	**DIFF.**
1	*	7/23-24/2013	21:15 - 21:35	57.40	54.70	2.70
2		7/23-24/2013	21:45 - 22:05	58.70	57.50	1.20
3		7/23-24/2013	22:15 - 22:35	50.10	49.90	0.20
4		7/23-24/2013	22:45 - 23:05	56.60	56.90	-0.30
5		7/23-24/2013	23:15 - 23:35	53.80	52.40	1.40
6		7/23-24/2013	23:45 - 0:05	55.40	53.70	1.70
7		7/23-24/2013	0:20 - 0:40	48.70	47.00	1.70
8		7/23-24/2013	12:50 - 1:10	57.80	55.70	2.10
9		7/23-24/2013	1:20 - 1:40	67.20	64.80	2.40
10		7/23-24/2013	1:50 - 2:10	68.70	66.40	2.30
Average Diff.				57.444	56.033	1.411
Standard Deviation						0.925
Confidence Coefficient						0.711219
Relative Accuracy						3.69
Bias Test						Fail
Bias Adjustment Factor						1.025

* Run was not used in Relative Accuracy calculation

RM = Reference Method

CEM = Continuous Emission Monitor

Summary of the Results of the July 23-24, 2013, Relative Accuracy Test Audit of the SO2 Analyzer Installed on the No. 9 Boiler Breeching at the Manitowoc Public Utilities Plant located in Manitowoc, Wisconsin.

						177 Klbs/Hr		
						SO_2 ppm, wet		
Run		Date	Time			RM	CEM	DIFF.
1		7/23-24/2013	21:15	-	21:35	55.40	59.20	-3.80
2		7/23-24/2013	21:45	-	22:05	74.20	71.70	2.50
3		7/23-24/2013	22:15	-	22:35	82.00	82.60	-0.60
4		7/23-24/2013	22:45	-	23:05	61.00	57.90	3.10
5		7/23-24/2013	23:15	-	23:35	98.20	91.10	7.10
6		7/23-24/2013	23:45	-	0:05	84.10	79.70	4.40
7		7/23-24/2013	0:20	-	0:40	98.60	95.50	3.10
8		7/23-24/2013	12:50	-	1:10	77.80	77.20	0.60
9		7/23-24/2013	1:20	-	1:40	75.40	71.20	4.20
10	*	7/23-24/2013	1:50	-	2:10	75.80	71.30	4.50
Average Diff.						78.522	76.233	2.288889
Standard Deviation								3.180
Confidence Coefficient								2.444204
Relative Accuracy								6.03
Bias Test								Pass
Bias Adjustment Factor								1.030

* Run was not used in Relative Accuracy calculation

RM = Reference Method

CEM = Continuous Emission Monitor

Summary of the Results of the July 23-24, 2013, Relative Accuracy Test Audit of the SO2 Analyzer Installed on the No. 9 Boiler Breeching at the Manitowoc Public Utilities Plant located in Manitowoc, Wisconsin.

						177 Klbs/Hr		
						SO_2 Lbs/mmBTU		
Run		Date	Time			RM	CEM	DIFF.
1		7/23-24/2013	21:15	-	21:35	0.172	0.177	-0.005
2		7/23-24/2013	21:45	-	22:05	0.234	0.216	0.018
3		7/23-24/2013	22:15	-	22:35	0.259	0.249	0.010
4		7/23-24/2013	22:45	-	23:05	0.193	0.176	0.017
5	*	7/23-24/2013	23:15	-	23:35	0.310	0.277	0.033
6		7/23-24/2013	23:45	-	0:05	0.265	0.242	0.023
7		7/23-24/2013	0:20	-	0:40	0.305	0.287	0.018
8		7/23-24/2013	12:50	-	1:10	0.238	0.232	0.006
9		7/23-24/2013	1:20	-	1:40	0.231	0.213	0.018
10		7/23-24/2013	1:50	-	2:10	0.234	0.215	0.019
Average Diff.						0.237	0.223	0.013813
Standard Deviation								0.009
Confidence Coefficient								0.006625
Relative Accuracy								8.63
Bias Test								Fail
Bias Adjustment Factor								1.062

* Run was not used in Relative Accuracy calculation

RM = Reference Method

CEM = Continuous Emission Monitor

Summary of the Results of the July 23-24, 2013, Relative Accuracy Test Audit on the CO2 Analyzer Installed on the No. 9 Boiler Breeching at the Manitowoc Public Utilities Plant located in Manitowoc, Wisconsin.

177 Klbs/Hr

						CO_2, wet Summary		
Run		**Date**	**Time**			**RM**	**CEM**	**DIFF.**
1	*	7/23-24/2013	21:15	-	21:35	10.00	10.20	-0.20
2		7/23-24/2013	21:45	-	22:05	9.90	10.10	-0.20
3		7/23-24/2013	22:15	-	22:35	9.90	10.10	-0.20
4		7/23-24/2013	22:45	-	23:05	9.90	10.00	-0.10
5		7/23-24/2013	23:15	-	23:35	9.90	10.00	-0.10
6		7/23-24/2013	23:45	-	0:05	9.90	10.00	-0.10
7		7/23-24/2013	0:20	-	0:40	10.10	10.10	0.00
8		7/23-24/2013	12:50	-	1:10	10.20	10.10	0.10
9		7/23-24/2013	1:20	-	1:40	10.20	10.20	0.00
10		7/23-24/2013	1:50	-	2:10	10.10	10.10	0.00
Average Difference						10.011	10.078	-0.06667
Standard Deviation								0.100
Confidence Coefficient								0.076867
Relative Accuracy								1.43
Bias Test								Pass
Bias Adjustment Factor								0.993

* Run was not used in Relative Accuracy calculation

RM = Reference Method

CEM = Continuous Emission Monitor

Summary of the Results of the July 23-24, 2013, Relative Accuracy Test Audit on the Flow Analyzer Installed on the No. 9 Boiler Breeching at the Manitowoc Public Utilities Plant located in Manitowoc, Wisconsin.

177 Klbs/Hr

Run		Date	Time			Flow (SCFH) Summary RM	CEM	DIFF.
1	*	7/23-24/2013	21:15	-	21:25	4,907,000	4,824,000	83,000
2		7/23-24/2013	21:45	-	21:55	4,861,000	4,811,000	50,000
3		7/23-24/2013	22:15	-	22:25	4,894,000	4,822,000	72,000
4		7/23-24/2013	22:45	-	22:55	4,857,000	4,811,000	46,000
5		7/23-24/2013	23:15	-	23:25	4,867,000	4,789,000	78,000
6		7/23-24/2013	23:45	-	23:55	4,847,000	4,807,000	40,000
7		7/23-24/2013	0:20	-	0:30	4,808,000	4,818,000	-10,000
8		7/23-24/2013	12:50	-	1:00	4,746,000	4,805,000	-59,000
9		7/23-24/2013	1:20	-	1:30	4,857,000	4,794,000	63,000
10		7/23-24/2013	1:50	-	2:00	4,791,000	4,811,000	-20,000
Average Difference						4836444.444	4807555.556	28888.88889
Standard Deviation								47332.453
Confidence Coefficient								36382.878906
Relative Accuracy								1.35
Bias Test								Pass
Bias Adjustment Factor								1.006

* Run was not used in Relative Accuracy calculation

RM = Reference Method

CEM = Continuous Emission Monitor

Results of the July 24, 2013 Relative Accuracy Test Audit
of the Flow Analyzer Installed on the No. 9 Boiler Breeching at the
Manitowoc Public Utilities Plant located in Manitowoc, Wisconsin.

			Flow (SCFH)		
Run	Date	Time	RM	CEM	DIFF.
1	07/24/13	11:10 - 11:16	6,294,000	6,233,000	61,000
2 *	07/24/13	11:17 - 11:23	5,762,000	6,270,000	-508,000
3	07/24/13	11:24 - 11:30	5,890,000	6,275,000	-385,000
4	07/24/13	11:40 - 11:46	6,359,000	6,238,000	121,000
5	07/24/13	11:47 - 11:53	6,438,000	6,238,000	200,000
6	07/24/13	11:54 - 12:00	6,360,000	6,247,000	113,000
7	07/24/13	12:08 - 12:14	6,319,000	6,224,000	95,000
8	07/24/13	12:15 - 12:21	6,347,000	6,204,000	143,000
9	07/24/13	12:22 - 12:28	6,291,000	6,211,000	80,000
10	07/24/13	12:29 - 12:35	6,295,000	6,215,000	80,000
Average Diff.			6288111.111	6231666.667	56444.444
Confidence Coefficient					131168.699355
Standard Deviation					170644.448
Relative Accuracy					2.98
Bias Test					Pass
Bias Adjustment Factor					1.00905768

* Run was not used in Relative Accuracy calculation

RM = Reference Method

CEM = Continuous Emission Monitor

Summary of the Results of the July 23-24, 2013, Relative Accuracy Test Audit of the CO Analyzer Installed on the No. 9 Boiler Breeching at the Manitowoc Public Utilities Plant located in Manitowoc, Wisconsin.

					177 Klbs/Hr		
					CO ppm, wet		
Run		Date	Time		RM	CEM	DIFF.
1		7/23-24/2013	21:15 -	21:35	13.30	15.30	-2.00
2		7/23-24/2013	21:45 -	22:05	17.50	15.00	2.50
3		7/23-24/2013	22:15 -	22:35	17.70	14.90	2.80
4		7/23-24/2013	22:45 -	23:05	17.10	13.60	3.50
5		7/23-24/2013	23:15 -	23:35	15.30	12.80	2.50
6		7/23-24/2013	23:45 -	0:05	15.10	17.40	-2.30
7	*	7/23-24/2013	0:20 -	0:40	15.90	20.40	-4.50
8		7/23-24/2013	12:50 -	1:10	14.80	18.80	-4.00
9		7/23-24/2013	1:20 -	1:40	17.00	17.80	-0.80
10		7/23-24/2013	1:50 -	2:10	17.20	18.20	-1.00
Average Diff.					16.111	15.978	0.133333
Standard Deviation							2.724
Confidence Coefficient							2.093823
Relative Accuracy calculated using applicable standard of 200 ppm							1.11
Bias Test							Pass
Bias Adjustment Factor							1.008

* Run was not used in Relative Accuracy calculation

RM = Reference Method

CEM = Continuous Emission Monitor

** Calculated in accordance with CFR, Part 60, App. B, PS 4A, 13.2. Using the applicable standard. Applicable standard for the source is 200 ppm. An alternative method of calculation is also allowed in which the average difference, plus the confidence coefficient, must be less than 5 ppmv.

Summary of the Results of the July 23-24, 2013, Relative Accuracy Test Audit of the CO Analyzer Installed on the No. 9 Boiler Breeching at the Manitowoc Public Utilities Plant located in Manitowoc, Wisconsin.

				CO Lbs/mmBTU		
Run		Date	Time	RM	CEM	DIFF.
1		7/23-24/2013	21:15 - 21:35	0.018	0.020	-0.002
2		7/23-24/2013	21:45 - 22:05	0.024	0.020	0.004
3		7/23-24/2013	22:15 - 22:35	0.024	0.020	0.004
4	*	7/23-24/2013	22:45 - 23:05	0.024	0.018	0.006
5		7/23-24/2013	23:15 - 23:35	0.021	0.017	0.004
6		7/23-24/2013	23:45 - 0:05	0.021	0.023	-0.002
7		7/23-24/2013	0:20 - 0:40	0.022	0.027	-0.005
8		7/23-24/2013	12:50 - 1:10	0.020	0.025	-0.005
9		7/23-24/2013	1:20 - 1:40	0.023	0.023	0.000
10		7/23-24/2013	1:50 - 2:10	0.023	0.024	-0.001
Average Diff.				0.022	0.022	0.000274
Standard Deviation						0.004
Confidence Coefficient						0.002801
Relative Accuracy (using applicable standard 0.3)						1.03
Bias Test						Pass
Bias Adjustment Factor						1.013

* Run was not used in Relative Accuracy calculation

RM = Reference Method

CEM = Continuous Emission Monitor

APPENDIX A

SAMPLING EQUIPMENT CALIBRATION DATA

INTERPOLL LABORATORIES, INC.
(763) 786-6020

Temperature Measurement Device Calibration Sheet

Unit under Test:

Vendor	Cen Tech	Serial Number	6048682
Model	92242	Thermocouple Type	Type K
Range	0-2000	Technician	Mike Bonham
Date of Calibration	8/2/2012	PDT Number	138

Method of Calibration:

Omega Model CL-300 Type K Thermocouple Simulator which provides 22 precise temperature equivalent millivolt signals. The CL-300 is cold junction compensated. Calibration accuracy is +/- 0.1 % of span(2100 oF) +/- 1 degree (for negative temperatures add +/- 2 degrees). The CL-300 simulated exactly the millivoltage of a Type K thermocouple at the indicated temperature.

Desired Temp. (°F) Nominal	Response of Unit Under Test (°F)	Deviation	
		Δ t (°F)	%
0	9	9	1.919
100	103	3	0.533
200	210	10	1.493
300	304	4	0.524
400	405	5	0.578
500	501	1	0.104
600	605	5	0.469
700	700	0	0.000
800	804	4	0.316
900	901	1	0.073
1000	1006	6	0.409
1100	1103	3	0.192
1200	1204	4	0.240
1300	1301	1	0.057
1400	1404	4	0.215
1500	1503	3	0.153
1600	1604	4	0.194
1700	1700	0	0.000
1800	1800	0	0.000
1900	1901	1	0.042
2000	2000	0	0.000
2100			
	Average:	**3.24**	**0.3577**

OF = off scale response by unit under test (oF)

% dev = 100Δt/(460+t)

☐ **Unit was in tolerance**
(Must be within +/- 1.5% absolute reference temperature)

☐ **Unit was not in tolerance : Recalibrated see new calibration sheet or unit put out of service.**

MPU03458

INTERPOLL LABORATORIES, INC.
(763) 786-6020

Temperature Measurement Device Calibration Sheet

Unit under Test:

Vendor	Omega	Serial Number	201108
Model	hh-81	Thermocouple Type	Type K
Range	0-2100 °F	Technician	D Van Hoever
Date of Calibration	4/5/2013	PDT Number	85

Method of Calibration:

Omega Model CL-300 Type K Thermocouple Simulator which provides 22 precise temperature equivalent millivolt signals. The CL-300 is cold junction compensated. Calibration accuracy is +/- 0.1 % of span(2100 oF) +/- 1 degree (for negative temperatures add +/- 2 degrees). The CL-300 simulated exactly the millivoltage of a Type K thermocouple at the indicated temperature.

Desired Temp. (°F) Nominal	Response of Unit Under Test (°F)	Deviation	
		Δt (°F)	%
0	1	1	0.217
100	101	1	0.179
200	204	4	0.606
300	303	3	0.395
400	401	1	0.116
500	500	0	0.000
600	603	3	0.283
700	700	0	0.000
800	803	3	0.238
900	902	2	0.147
1000	1004	4	0.274
1100	1104	4	0.256
1200	1204	4	0.241
1300	1305	5	0.284
1400	1404	4	0.215
1500	1505	5	0.255
1600	1605	5	0.243
1700	1703	3	0.139
1800	1802	2	0.088
1900	1903	3	0.127
2000			
2100	OF		
	Average:	**3**	**0.215**

OF = off scale response by unit under test (oF)

% dev = 100Δt/(460+t)

☐ **Unit was in tolerance**
(Must be within +/- 1.5% absolute reference temperature)

☐ **Unit was not in tolerance : Recalibrated see new calibration sheet or unit put out of service.**

INTERPOLL LABORATORIES, INC.
(763) 786-6020

Stack Sampling Department - QA
Field Barometer Calibration Sheet

Date:	4/5/2013
Technician:	Aaron Wilson
Mercury Column Barometer Number:	Weighing Room Barometer
Aneroid Barometer Number:	NO.1 (2109004)

Reference Mercury Barometer Reading	Ambient Temperature	Temperature Correction Factor	Adjusted Mercury Barometer Reading	Initial Field Barometer Reading	Difference (P_{ba} - P_{bm})
29.27	76	0.124	29.15	29.13	-0.016

Weighing room barometer setup:

1) Using the set screw on the bottom of the barometer, adjust the level of the mercury reservoir to the point that the level indicator makes slight contact with the mercury. A flashlight can aid in seeing the dimple formed when the level indicator makes contact with the mercury.

2) Slide the measurement ruler on the barometer to the point where the bottom of the ruler is in line with the top of the mercury column's reverse meniscus. Record the reading (in. Hg)

3) Take a temperature reading and record the temperature correction factor from the lookup table near the barometer.

4) Apply the temperature correction factor to the mercury barometer.

5) Adjust the field barometer reading to within +/- 0.1 in. Hg of the reference barometer reading.

Has this barometer shown any consistent problems with calibration? Has the problem been alleviated?_____

Note: Aneroid barometers will be calibrated periodically against a mercury column barometer. The aneroid barometer to be calibrated should be placed in close proximity to the mercury barometer and left to equilibrate for 20 - 30 minutes before calibrating. Aneroid barometer will be calibrated to the adjusted mercury barometer readings.

Alternative Calibration Procedure:

1) Obtain the station value or absolute barometric pressure Pr from a nearby National Weather Service station and its elevation (A) in feet above sea level.
2) Determine the elevation (B) in feet above sea level of the site of the field barometer.(local airport)
3) Calculate the site barometric pressure (Pb) as follows:

$$Pb = Pr + 0.001\ (A-B)$$

4) Compare the field barometer reading against Pb obtained in step 3.
5) Adjust the field barometer reading to within +/- 0.1 in. Hg.

MPU03460

Environmental Supply Company, Inc.

Quality Source Sampling Systems & Accessories

Wind Tunnel Pitot Calibration

Customer:	Interpoll Laboratories		
S-type Pitot ID:	04-S+P1	Date:	1-Apr-13
Standard Pitot ID:	001	Personnel:	DH
Cp(std):	0.99	Cp(actual):	0.831
Part Number:		P(bar):	29.35
Test Velocity (fps):	30 - 60 - 90	T(°F):	56

Calibration Results

Velocity (fps)	Nominal ΔPs [inches H_2O]	$Cp_{(s)}$ A-Side	$Cp_{(s)}$ B-Side	$Cp_{(s)}$ Average
30	0.284	0.834	0.836	0.835
60	1.142	0.825	0.833	0.829
90	2.623	0.824	0.833	0.828
		Overall Average		0.831

Pitot tube S/N 04-S+P1 was calibrated in accordance with the Code of Federal Regulations, Title 40, Part 60 Appendix A, Method 2, Section 10.

Signature

4/1/13
Date

708 E. Club Blvd., Durham, North Carolina 27704 www.environsupply.com 919-956-9688 FAX: 919-682-0333

S-Type Pitot (S/N 04-5+P1) - Pitot Coefficient (Cp) vs Velocity (fps)

Environmental Supply Company Wind Tunnel - 04/01/2013

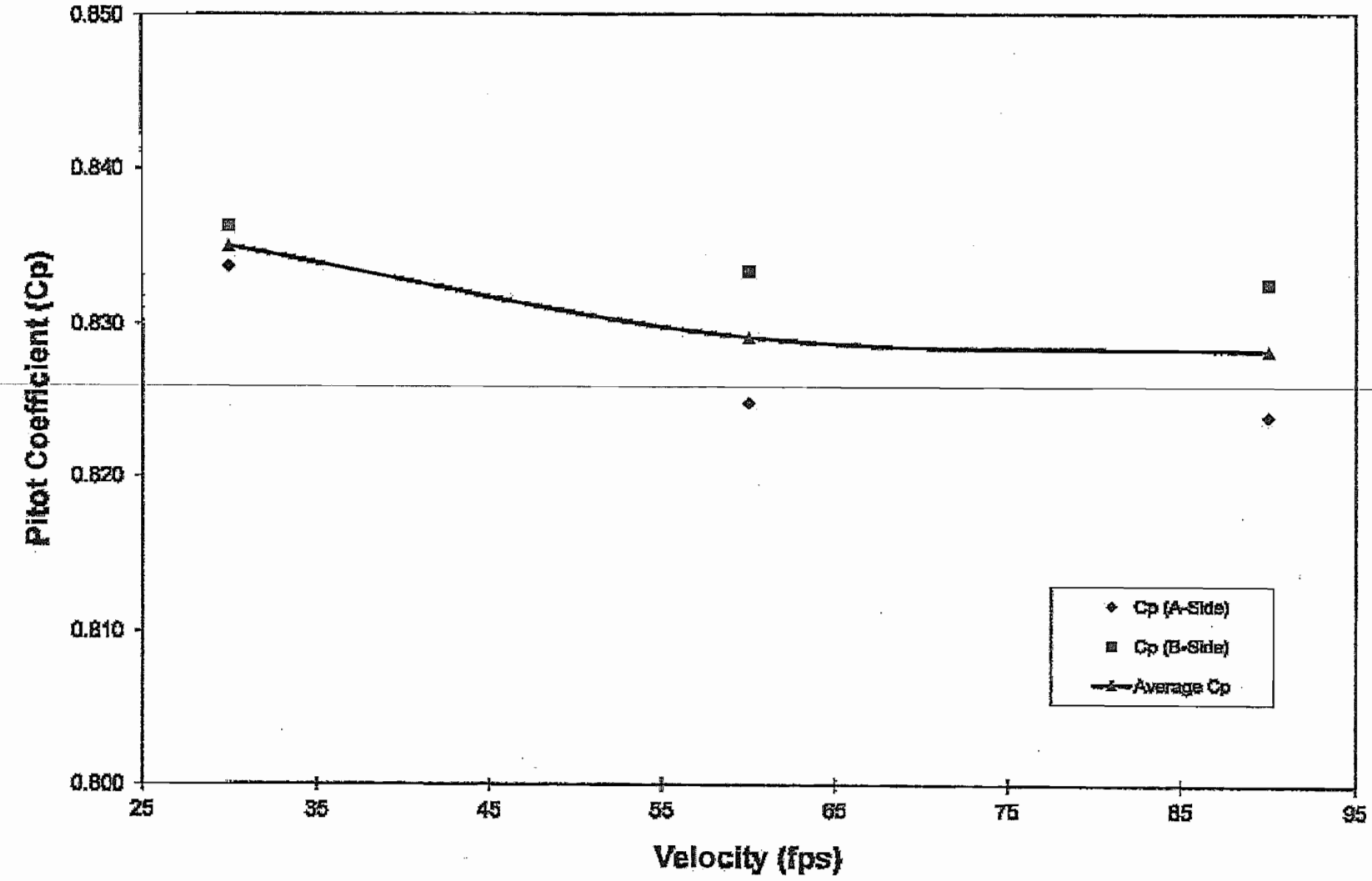

MPU03462

Wind Tunnel Pitot Calibration

S-type Pitot ID:	04-5+P1	Date:	1-Apr-13
Standard Pitot ID:	001	Personnel:	DH
Cp(std):	0.99	Cp(actual):	0.835
Part Number:		P(bar):	29.35
Test Velocity (fps):	30	T(°F):	56

A-SIDE

ΔP_{std} (in. H_2O)	ΔP_s (in. H_2O)	Cp(s)	Deviation*
0.202	0.283	0.837	0.003
0.202	0.285	0.834	0.000
0.202	0.286	0.831	-0.003
0.201	0.285	0.833	-0.001
	AVERAGE	0.834	0.002
		Std deviation	0.003

B-SIDE

ΔP_{std} (in. H_2O)	ΔP_s (in. H_2O)	Cp(s)	Deviation*
0.202	0.282	0.839	0.003
0.202	0.283	0.836	0.000
0.202	0.284	0.835	-0.002
0.201	0.283	0.835	-0.001
	AVERAGE	0.836	0.001
		Std deviation	0.002

$$Cp(s) = Cp(std)\sqrt{\frac{\Delta P(std)}{\Delta P(s)}}$$

Cp(A) - Cp(B) = 0.003 (must be <0.010)

*Deviation = {Cp(s) - *AVG* Cp(s)} (must be <0.010)

Standard deviation of the deviations must be less than 0.02 for both

Pitot tube S/N 04-5+P1 was calibrated in accordance with the CFR 40, Part 60 Appendix A, Method 2, Section 10.

Environmental Supply Company, Inc.

Quality Source Sampling Systems & Accessories

Wind Tunnel Pitot Calibration

S-type Pitot ID:	04-5+P1	Date:	1-Apr-13
Standard Pitot ID:	001	Personnel:	DH
Cp(std):	0.99	Cp(actual):	0.829
Part Number:		P(bar):	29.35
Test Velocity (fps):	60	T(°F):	56

A-SIDE

ΔP_{std} (in. H_2O)	ΔP_s (in. H_2O)	Cp(s)	Deviation*
0.799	1.154	0.824	-0.001
0.803	1.153	0.827	0.002
0.800	1.152	0.825	0.000
0.802	1.159	0.824	-0.001
	AVERAGE	0.825	0.001
		Std deviation	0.001

B-SIDE

ΔP_{std} (in. H_2O)	ΔP_s (in. H_2O)	Cp(s)	Deviation*
0.799	1.132	0.832	-0.002
0.803	1.129	0.835	0.002
0.800	1.130	0.833	0.000
0.802	1.131	0.834	0.000
	AVERAGE	0.833	0.001
		Std deviation	0.001

$$Cp(s) = Cp(std)\sqrt{\frac{\Delta P(std)}{\Delta P(s)}}$$

Cp(A) - Cp(B) = 0.009 (must be <0.010)

*Deviation = {Cp(s) - *AVG* Cp(s)} (must be <0.010)

Standard deviation of the deviations must be less than 0.02 for both

Pitot tube S/N 04-5+P1 was calibrated in accordance with the CFR 40, Part 60 Appendix A, Method 2, Section 10.

708 E. Club Blvd., Durham, North Carolina 27704 www.environsupply.com 919-956-9688 FAX: 919-682-0333

Wind Tunnel Pitot Calibration

S-type Pitot ID:	04-5+P1	Date:	1-Apr-13
Standard Pitot ID:	001	Personnel:	DH
Cp(std):	0.99	Cp(actual):	0.828
Part Number:		P(bar):	29.35
Test Velocity (fps):	90	T(°F):	56

A-SIDE

ΔP_{std} (in. H_2O)	ΔP_s (in. H_2O)	Cp(s)	Deviation*
1.837	2.657	0.823	-0.001
1.836	2.652	0.824	0.000
1.832	2.642	0.824	0.001
1.837	2.651	0.824	0.000
	AVERAGE	0.824	0.000
		Std deviation	0.001

B-SIDE

ΔP_{std} (in. H_2O)	ΔP_s (in. H_2O)	Cp(s)	Deviation*
1.837	2.603	0.832	-0.001
1.836	2.594	0.833	0.000
1.832	2.588	0.833	0.000
1.837	2.597	0.833	0.000
	AVERAGE	0.833	0.000
		Std deviation	0.001

$$Cp(s) = Cp(std)\sqrt{\frac{\Delta P(std)}{\Delta P(s)}}$$

Cp(A) - Cp(B) = 0.009 (must be <0.010)

*Deviation = {Cp(s) - *AVG* Cp(s)} (must be <0.010)

Standard deviation of the deviations must be less than 0.02 for both

Pitot tube S/N 04-5+P1 was calibrated in accordance with the CFR 40, Part 60 Appendix A, Method 2, Section 10.

APPENDIX B

FIELD DATA SHEETS

Interpoll Laboratories
(763) 786-6020
EPA Method 2 Field Data Sheet

Job	MSI / Manitowoc PU				
Source	No. 9 Boiler				
Test	2N	Run 1	Date	7/23-24/2013	
Stack Diameter (in.)	108				
Dry Bulb (°F)	310		Wet Bulb (°F)	137	
Moisture Content (%)	12.36				
Monometer	Normal				
Barometric Pressure	29.29				
Static Pressure +/-	-0.69				
Operators	AW / NB				
Pitot No.	04-5+-P1		Pitot Coeff.	0.831	

Cross-section View	Elevation View

177 Klbs/Hr

Traverse Point Number	Fraction of Diameter	Distance From Stack Wall (in.)	Distance From End of Port (in.)	Velocity	Temperature of Gas (°F)
		Port Length (in.):	11.50	Start Time:	9:15 PM
A-1	0.032	3.46	14.96	0.210	310
A-2	0.105	11.34	22.84	0.230	310
A-3	0.194	20.95	32.45	0.220	310
A-4	0.323	34.88	46.38	0.220	310
A-5	0.677	73.12	84.62	0.210	310
A-6	0.806	87.05	98.55	0.210	310
A-7	0.895	96.66	108.16	0.220	310
A-8	0.968	104.54	116.04	0.220	310
B-1				0.220	308
B-2				0.220	308
B-3				0.210	308
B-4				0.180	308
B-5				0.220	308
B-6				0.250	308
B-7				0.240	308
B-8				0.290	308
Digital Numbers Used:		85 / 138		End Time:	9:25 PM

Interpoll Laboratories
(763) 786-6020
EPA Method 2 Field Data Sheet

Job	MSI / Manitowoc PU				
Source	No. 9 Boiler				
Test	2N	Run 2	Date	7/23-24/2013	
Stack Diameter (in.)	108				
Dry Bulb (°F)	313	Wet Bulb (°F)	136		
Moisture Content (%)	11.75				
Monometer	Normal				
Barometric Pressure	29.29				
Static Pressure +/-	-0.69				
Operators	AW / NB				
Pitot No.	04-5+-P1	Pitot Coeff.	0.831		

Cross-section View	Elevation View

177 Klbs/Hr

Traverse Point Number	Fraction of Diameter	Distance From Stack Wall (in.)	Distance From End of Port (in.)	Velocity	Temperature of Gas (°F)
		Port Length (in.):	11.50	Start Time:	9:45 PM
A-1	0.032	3.46	14.96	0.190	313
A-2	0.105	11.34	22.84	0.180	313
A-3	0.194	20.95	32.45	0.170	313
A-4	0.323	34.88	46.38	0.170	313
A-5	0.677	73.12	84.62	0.210	313
A-6	0.806	87.05	98.55	0.200	313
A-7	0.895	96.66	108.16	0.190	313
A-8	0.968	104.54	116.04	0.190	313
B-1				0.210	310
B-2				0.190	310
B-3				0.220	310
B-4				0.200	310
B-5				0.260	310
B-6				0.310	310
B-7				0.330	310
B-8				0.340	310
Digital Numbers Used:		85 / 138		End Time:	9:55 PM

Interpoll Laboratories
(763) 786-6020

EPA Method 2 Field Data Sheet

Job	MSI / Manitowoc PU			
Source	No. 9 Boiler			
Test	2N	Run 3	Date	7/23-24/2013
Stack Diameter (in.)	108			
Dry Bulb (°F)	313	Wet Bulb (°F)	135	
Moisture Content (%)	11.23			
Monometer	Normal			
Barometric Pressure	29.29			
Static Pressure +/-	-0.69			
Operators	AW / NB			
Pitot No.	04-5+-P1	Pitot Coeff.	0.831	

Cross-section View	Elevation View

177 Klbs/Hr

Traverse Point Number	Fraction of Diameter	Distance From Stack Wall (in.)	Distance From End of Port (in.)	Velocity	Temperature of Gas (°F)
		Port Length (in.):	11.50	Start Time:	10:15 PM
A-1	0.032	3.46	14.96	0.190	313
A-2	0.105	11.34	22.84	0.190	313
A-3	0.194	20.95	32.45	0.200	313
A-4	0.323	34.88	46.38	0.210	313
A-5	0.677	73.12	84.62	0.230	313
A-6	0.806	87.05	98.55	0.220	313
A-7	0.895	96.66	108.16	0.210	313
A-8	0.968	104.54	116.04	0.220	313
B-1				0.210	311
B-2				0.210	311
B-3				0.220	311
B-4				0.240	311
B-5				0.230	311
B-6				0.250	311
B-7				0.280	311
B-8				0.270	311
Digital Numbers Used:		85 / 138		End Time:	10:25 PM

MPU03469

Interpoll Laboratories
(763) 786-6020

EPA Method 2 Field Data Sheet

Job	MSI / Manitowoc PU			
Source	No. 9 Boiler			
Test	2N	Run 4	Date	7/23-24/2013
Stack Diameter (in.)	108			
Dry Bulb (°F)	310	Wet Bulb (°F)	136	
Moisture Content (%)	11.71			
Monometer	Normal			
Barometric Pressure	29.29			
Static Pressure +/-	0.70			
Operators	AW / NB			
Pitot No.	04-5+-P1	Pitot Coeff.	0.831	

Cross-section View	Elevation View

177 Klbs/Hr

Traverse Point Number	Fraction of Diameter	Distance From Stack Wall (in.)	Distance From End of Port (in.)	Velocity	Temperature of Gas (°F)
		Port Length (in.):	11.50	Start Time:	10:45 PM
A-1	0.032	3.46	14.96	0.230	310
A-2	0.105	11.34	22.84	0.210	310
A-3	0.194	20.95	32.45	0.200	310
A-4	0.323	34.88	46.38	0.210	310
A-5	0.677	73.12	84.62	0.230	310
A-6	0.806	87.05	98.55	0.230	310
A-7	0.895	96.66	108.16	0.220	310
A-8	0.968	104.54	116.04	0.210	310
B-1				0.200	312
B-2				0.200	312
B-3				0.190	312
B-4				0.210	312
B-5				0.210	312
B-6				0.220	312
B-7				0.250	312
B-8				0.280	312
Digital Numbers Used:		85 / 138		End Time:	10:55 PM

Interpoll Laboratories
(763) 786-6020

EPA Method 2 Field Data Sheet

Job	MSI / Manitowoc PU				
Source	No. 9 Boiler				
Test	2N	Run 5	Date	7/23-24/2013	
Stack Diameter (in.)	108				
Dry Bulb (°F)	310	Wet Bulb (°F)	136		
Moisture Content (%)	11.83				
Monometer	Normal				
Barometric Pressure	29.29				
Static Pressure +/-	-0.70				
Operators	AW / NB				
Pitot No.	04-5+-P1	Pitot Coeff.	0.831		

Cross-section View	Elevation View

177 Klbs/Hr

Traverse Point Number	Fraction of Diameter	Distance From Stack Wall (in.)	Distance From End of Port (in.)	Velocity	Temperature of Gas (°F)
		Port Length (in.):	11.50	Start Time:	11:15 PM
A-1	0.032	3.46	14.96	0.240	310
A-2	0.105	11.34	22.84	0.230	310
A-3	0.194	20.95	32.45	0.210	310
A-4	0.323	34.88	46.38	0.220	310
A-5	0.677	73.12	84.62	0.230	310
A-6	0.806	87.05	98.55	0.210	310
A-7	0.895	96.66	108.16	0.220	310
A-8	0.968	104.54	116.04	0.220	310
B-1				0.180	309
B-2				0.170	309
B-3				0.180	309
B-4				0.200	309
B-5				0.250	309
B-6				0.240	309
B-7				0.260	309
B-8				0.270	309
Digital Numbers Used:		85 / 138		End Time:	11:25 PM

Interpoll Laboratories
(763) 786-6020

EPA Method 2 Field Data Sheet

Job	MSI / Manitowoc PU				
Source	No. 9 Boiler				
Test	2N	Run 6	Date	7/23-24/2013	Cross-section View / Elevation View
Stack Diameter (in.)	108				
Dry Bulb (°F)	311	Wet Bulb (°F)	136		
Moisture Content (%)	11.81				
Monometer	Normal				
Barometric Pressure	29.29				
Static Pressure +/-	-0.69				
Operators	AW / NB				
Pitot No.	04-5+-P1	Pitot Coeff.	0.831		

177 Kibs/Hr

Traverse Point Number	Fraction of Diameter	Distance From Stack Wall (in.)	Distance From End of Port (in.)	Velocity	Temperature of Gas (°F)
		Port Length (in.):	11.50	Start Time:	11:45 PM
A-1	0.032	3.46	14.96	0.220	311
A-2	0.105	11.34	22.84	0.230	311
A-3	0.194	20.95	32.45	0.210	311
A-4	0.323	34.88	46.38	0.220	311
A-5	0.677	73.12	84.62	0.230	311
A-6	0.806	87.05	98.55	0.200	311
A-7	0.895	96.66	108.16	0.210	311
A-8	0.968	104.54	116.04	0.200	311
B-1				0.200	309
B-2				0.190	309
B-3				0.200	309
B-4				0.230	309
B-5				0.240	309
B-6				0.220	309
B-7				0.250	309
B-8				0.240	309
Digital Numbers Used:		85 / 138		End Time:	11:55 PM

Interpoll Laboratories
(763) 786-6020

EPA Method 2 Field Data Sheet

Job	MSI / Manitowoc PU			
Source	No. 9 Boiler			
Test	2N	Run 7	Date	7/23-24/2013
Stack Diameter (in.)	108			
Dry Bulb (°F)	312	Wet Bulb (°F)	137	
Moisture Content (%)	12.27			
Monometer	Normal			
Barometric Pressure	29.29			
Static Pressure +/-	-0.71			
Operators	AW / NB			
Pitot No.	04-5+-P1	Pitot Coeff.	0.831	

Cross-section View	Elevation View

177 Klbs/Hr

Traverse Point Number	Fraction of Diameter	Distance From Stack Wall (in.)	Distance From End of Port (in.)	Velocity	Temperature of Gas (°F)
		Port Length (in.):	11.50	Start Time:	12:20 AM
A-1	0.032	3.46	14.96	0.210	312
A-2	0.105	11.34	22.84	0.200	312
A-3	0.194	20.95	32.45	0.220	312
A-4	0.323	34.88	46.38	0.210	312
A-5	0.677	73.12	84.62	0.190	312
A-6	0.806	87.05	98.55	0.210	312
A-7	0.895	96.66	108.16	0.210	312
A-8	0.968	104.54	116.04	0.200	312
B-1				0.180	311
B-2				0.190	311
B-3				0.220	311
B-4				0.230	311
B-5				0.230	311
B-6				0.250	311
B-7				0.250	311
B-8				0.240	311
Digital Numbers Used:		85 / 138		End Time:	12:30 AM

Interpoll Laboratories
(763) 786-6020

EPA Method 2 Field Data Sheet

Job	MSI / Manitowoc PU			
Source	No. 9 Boiler			
Test	2N	Run 8	Date	7/23-24/2013
Stack Diameter (in.)	108			
Dry Bulb (°F)	311	Wet Bulb (°F)	137	
Moisture Content (%)	12.28			
Monometer	Normal			
Barometric Pressure	29.29			
Static Pressure +/-	-0.07			
Operators	AW / NB			
Pitot No.	04-5+-P1	Pitot Coeff.	0.831	

Cross-section View	Elevation View

177 Klbs/Hr

Traverse Point Number	Fraction of Diameter	Distance From Stack Wall (in.)	Distance From End of Port (in.)	Velocity	Temperature of Gas (°F)
		Port Length (in.):	11.50	Start Time:	12:50 PM
A-1	0.032	3.46	14.96	0.190	311
A-2	0.105	11.34	22.84	0.200	311
A-3	0.194	20.95	32.45	0.180	311
A-4	0.323	34.88	46.38	0.190	311
A-5	0.677	73.12	84.62	0.200	311
A-6	0.806	87.05	98.55	0.220	311
A-7	0.895	96.66	108.16	0.210	311
A-8	0.968	104.54	116.04	0.200	311
B-1				0.180	310
B-2				0.190	310
B-3				0.200	310
B-4				0.210	310
B-5				0.200	310
B-6				0.250	310
B-7				0.260	310
B-8				0.270	310
Digital Numbers Used:		85 / 138		End Time:	1:00 AM

Interpoll Laboratories
(763) 786-6020

EPA Method 2 Field Data Sheet

Job	MSI / Manitowoc PU				
Source	No. 9 Boiler				
Test	2N	Run 9	Date	7/23-24/2013	Cross-section View / Elevation View
Stack Diameter (in.)	108				
Dry Bulb (°F)	312	Wet Bulb (°F)	137		
Moisture Content (%)	12.29				
Monometer	Normal				
Barometric Pressure	29.29				
Static Pressure +/-	-0.72				
Operators	AW / NB				
Pitot No.	04-5+-P1	Pitot Coeff.	0.831		

177 Klbs/Hr

Traverse Point Number	Fraction of Diameter	Distance From Stack Wall (in.)	Distance From End of Port (in.)	Velocity	Temperature of Gas (°F)
		Port Length (in.):	11.50	Start Time:	1:20 AM
A-1	0.032	3.46	14.96	0.220	312
A-2	0.105	11.34	22.84	0.230	312
A-3	0.194	20.95	32.45	0.210	312
A-4	0.323	34.88	46.38	0.200	312
A-5	0.677	73.12	84.62	0.190	312
A-6	0.806	87.05	98.55	0.210	312
A-7	0.895	96.66	108.16	0.200	312
A-8	0.968	104.54	116.04	0.210	312
B-1				0.230	310
B-2				0.210	310
B-3				0.200	310
B-4				0.200	310
B-5				0.240	310
B-6				0.250	310
B-7				0.260	310
B-8				0.250	310
Digital Numbers Used:		85 / 138		End Time:	1:30 AM

Interpoll Laboratories
(763) 786-6020

EPA Method 2 Field Data Sheet

Job	MSI / Manitowoc PU				
Source	No. 9 Boiler				
Test	2N	Run 10	Date	7/23-24/2013	Cross-section View / Elevation View
Stack Diameter (in.)	108				
Dry Bulb (°F)	312	Wet Bulb (°F)	136		
Moisture Content (%)	11.74				
Monometer	Normal				
Barometric Pressure	29.29				
Static Pressure +/-	-0.07				
Operators	AW / NB				
Pitot No.	04-5+-P1	Pitot Coeff.	0.831		

177 Klbs/Hr

Traverse Point Number	Fraction of Diameter	Distance From Stack Wall (in.)	Distance From End of Port (in.)	Velocity	Temperature of Gas (°F)
		Port Length (in.):	11.50	Start Time:	1:50 AM
A-1	0.032	3.46	14.96	0.200	312
A-2	0.105	11.34	22.84	0.200	312
A-3	0.194	20.95	32.45	0.220	312
A-4	0.323	34.88	46.38	0.230	312
A-5	0.677	73.12	84.62	0.210	312
A-6	0.806	87.05	98.55	0.190	312
A-7	0.895	96.66	108.16	0.180	312
A-8	0.968	104.54	116.04	0.190	312
B-1				0.190	310
B-2				0.200	310
B-3				0.220	310
B-4				0.210	310
B-5				0.200	310
B-6				0.250	310
B-7				0.270	310
B-8				0.260	310
Digital Numbers Used:		85 / 138		End Time:	2:00 AM

Interpoll Laboratories
(763) 786-6020
EPA Method 2 Field Data Sheet

Job	MSI / Manitowoc PU				
Source	No. 9 Boiler				
Test	2M	Run 1	Date	7/24/2013	
Stack Diameter (in.)	108				
Dry Bulb (°F)	330		Wet Bulb (°F)	138	
Moisture Content (%)	12.01				
Monometer	Fluid				
Barometric Pressure	29.44				
Static Pressure +/-	-0.39				
Operators	AW / NB				
Pitot No.	04-5+-P1		Pitot Coeff.	0.8310	

Cross-section View	Elevation View

300 Klbs/Hr

Traverse Point Number	Fraction of Diameter	Distance From Stack Wall (in.)	Distance From End of Port (in.)	Velocity	Temperature of Gas (°F)
		Port Length (in.):	11.50	Start Time:	11:10 AM
A-1	0.032	3.46	14.96	0.430	330
A-2	0.105	11.34	22.84	0.410	330
A-3	0.194	20.95	32.45	0.390	330
A-4	0.323	34.88	46.38	0.380	330
A-5	0.677	73.12	84.62	0.360	330
A-6	0.806	87.05	98.55	0.380	330
A-7	0.895	96.66	108.16	0.370	330
A-8	0.968	104.54	116.04	0.380	330
B-1				0.350	331
B-2				0.340	331
B-3				0.340	331
B-4				0.330	331
B-5				0.370	331
B-6				0.410	331
B-7				0.420	331
B-8				0.430	331
Digital Numbers Used:		85 / 138		End Time:	11:16 AM

Interpoll Laboratories
(763) 786-6020
EPA Method 2 Field Data Sheet

Job	MSI / Manitowoc PU				
Source	No. 9 Boiler				
Test	2M	Run 2	Date	7/24/2013	Cross-section View / Elevation View
Stack Diameter (in.)	108				
Dry Bulb (°F)	330		Wet Bulb (°F)	139	
Moisture Content (%)	12.54				
Monometer	Fluid				
Barometric Pressure	29.44				
Static Pressure +/-	-0.34				
Operators	AW / NB				
Pitot No.	04-5+-P1		Pitot Coeff.	0.8310	

300 Klbs/Hr

Traverse Point Number	Fraction of Diameter	Distance From Stack Wall (in.)	Distance From End of Port (in.)	Velocity	Temperature of Gas (°F)
		Port Length (in.):	11.50	Start Time:	11:17 AM
A-1	0.032	3.46	14.96	0.350	330
A-2	0.105	11.34	22.84	0.320	330
A-3	0.194	20.95	32.45	0.310	330
A-4	0.323	34.88	46.38	0.270	330
A-5	0.677	73.12	84.62	0.270	330
A-6	0.806	87.05	98.55	0.270	330
A-7	0.895	96.66	108.16	0.280	330
A-8	0.968	104.54	116.04	0.270	330
B-1				0.320	331
B-2				0.330	331
B-3				0.360	331
B-4				0.330	331
B-5				0.340	331
B-6				0.340	331
B-7				0.360	331
B-8				0.380	331
Digital Numbers Used:		85 / 138		End Time:	11:23 AM

Interpoll Laboratories
(763) 786-6020

EPA Method 2 Field Data Sheet

Job	MSI / Manitowoc PU				
Source	No. 9 Boiler				
Test	2M	Run	3	Date	7/24/2013
Stack Diameter (in.)	108				
Dry Bulb (°F)	328			Wet Bulb (°F)	140
Moisture Content (%)	13.16				
Monometer	Fluid				
Barometric Pressure	29.44				
Static Pressure +/-	-0.37				
Operators	AW / NB				
Pitot No.	04-5+-P1			Pitot Coeff.	0.8310

Cross-section View	Elevation View

300 Klbs/Hr

Traverse Point Number	Fraction of Diameter	Distance From Stack Wall (in.)	Distance From End of Port (in.)	Velocity	Temperature of Gas (°F)
		Port Length (in.):	11.50	Start Time:	11:24 AM
A-1	0.032	3.46	14.96	0.350	328
A-2	0.105	11.34	22.84	0.350	328
A-3	0.194	20.95	32.45	0.340	328
A-4	0.323	34.88	46.38	0.340	328
A-5	0.677	73.12	84.62	0.360	328
A-6	0.806	87.05	98.55	0.390	328
A-7	0.895	96.66	108.16	0.400	328
A-8	0.968	104.54	116.04	0.380	328
B-1				0.310	329
B-2				0.280	329
B-3				0.260	329
B-4				0.250	329
B-5				0.310	329
B-6				0.310	329
B-7				0.320	329
B-8				0.360	329
Digital Numbers Used:		85 / 138		End Time:	11:30 AM

Interpoll Laboratories
(763) 786-6020

EPA Method 2 Field Data Sheet

Job	MSI / Manitowoc PU				
Source	No. 9 Boiler				
Test	2M	Run 4	Date	7/24/2013	
Stack Diameter (in.)	108				
Dry Bulb (°F)	328	Wet Bulb (°F)	141		
Moisture Content (%)	13.72				
Monometer	Fluid				
Barometric Pressure	29.44				
Static Pressure +/-	-0.35				
Operators	AW / NB				
Pitot No.	04-5+-P1	Pitot Coeff.	0.8310		

Cross-section View	Elevation View

300 Klbs/Hr

Traverse Point Number	Fraction of Diameter	Distance From Stack Wall (in.)	Distance From End of Port (in.)	Velocity	Temperature of Gas (°F)
		Port Length (in.):	11.50	Start Time:	11:40 AM
A-1	0.032	3.46	14.96	0.320	328
A-2	0.105	11.34	22.84	0.340	328
A-3	0.194	20.95	32.45	0.360	328
A-4	0.323	34.88	46.38	0.390	328
A-5	0.677	73.12	84.62	0.430	328
A-6	0.806	87.05	98.55	0.440	328
A-7	0.895	96.66	108.16	0.440	328
A-8	0.968	104.54	116.04	0.420	328
B-1				0.350	329
B-2				0.360	329
B-3				0.370	329
B-4				0.380	329
B-5				0.410	329
B-6				0.380	329
B-7				0.390	329
B-8				0.380	329
Digital Numbers Used:		85 / 138		End Time:	11:46 AM

Interpoll Laboratories
(763) 786-6020

EPA Method 2 Field Data Sheet

Job	MSI / Manitowoc PU				
Source	No. 9 Boiler				
Test	2M	Run 5	Date	7/24/2013	
Stack Diameter (in.)	108				
Dry Bulb (°F)	332	Wet Bulb (°F)	141		
Moisture Content (%)	13.57				
Monometer	Fluid				
Barometric Pressure	29.44				
Static Pressure +/-	-0.34				
Operators	AW / NB				
Pitot No.	04-5+-P1	Pitot Coeff.	0.8310		

Cross-section View	Elevation View

300 Klbs/Hr

Traverse Point Number	Fraction of Diameter	Distance From Stack Wall (in.)	Distance From End of Port (in.)	Velocity	Temperature of Gas (°F)
		Port Length (in.):	11.50	Start Time:	11:47 AM
A-1	0.032	3.46	14.96	0.390	332
A-2	0.105	11.34	22.84	0.380	332
A-3	0.194	20.95	32.45	0.430	332
A-4	0.323	34.88	46.38	0.430	332
A-5	0.677	73.12	84.62	0.440	332
A-6	0.806	87.05	98.55	0.460	332
A-7	0.895	96.66	108.16	0.470	332
A-8	0.968	104.54	116.04	0.450	332
B-1				0.380	331
B-2				0.370	331
B-3				0.380	331
B-4				0.360	331
B-5				0.360	331
B-6				0.350	331
B-7				0.380	331
B-8				0.320	331
Digital Numbers Used:		85 / 138		End Time:	11:53 AM

Interpoll Laboratories
(763) 786-6020

EPA Method 2 Field Data Sheet

Job	MSI / Manitowoc PU				
Source	No. 9 Boiler				
Test	2M	Run	6	Date	7/24/2013
Stack Diameter (in.)	108				
Dry Bulb (°F)	333	Wet Bulb (°F)	141		
Moisture Content (%)	13.53				
Monometer	Fluid				
Barometric Pressure	29.44				
Static Pressure +/-	-0.34				
Operators	AW / NB				
Pitot No.	04-5+-P1	Pitot Coeff.	0.8310		

Cross-section View	Elevation View

300 Klbs/Hr

Traverse Point Number	Fraction of Diameter	Distance From Stack Wall (in.)	Distance From End of Port (in.)	Velocity	Temperature of Gas (°F)
		Port Length (in.):	11.50	Start Time:	11:54 AM
A-1	0.032	3.46	14.96	0.410	333
A-2	0.105	11.34	22.84	0.380	333
A-3	0.194	20.95	32.45	0.330	333
A-4	0.323	34.88	46.38	0.320	333
A-5	0.677	73.12	84.62	0.320	333
A-6	0.806	87.05	98.55	0.340	333
A-7	0.895	96.66	108.16	0.330	333
A-8	0.968	104.54	116.04	0.340	333
B-1				0.380	332
B-2				0.380	332
B-3				0.400	332
B-4				0.420	332
B-5				0.420	332
B-6				0.470	332
B-7				0.480	332
B-8				0.500	332
Digital Numbers Used:		85 / 138		End Time:	12:00 PM

Interpoll Laboratories
(763) 786-6020

EPA Method 2 Field Data Sheet

Job	MSI / Manitowoc PU				
Source	No. 9 Boiler				
Test	2M	Run 7	Date	7/24/2013	
Stack Diameter (in.)	108				
Dry Bulb (°F)	334		Wet Bulb (°F)	140	
Moisture Content (%)	12.94				
Monometer	Fluid				
Barometric Pressure	29.44				
Static Pressure +/-	-0.35				
Operators	AW / NB				
Pitot No.	04-5+-P1		Pitot Coeff.	0.8310	

Cross-section View	Elevation View

300 Klbs/Hr

Traverse Point Number	Fraction of Diameter	Distance From Stack Wall (in.)	Distance From End of Port (in.)	Velocity	Temperature of Gas (°F)
		Port Length (in.):	11.50	Start Time:	12:08 PM
A-1	0.032	3.46	14.96	0.420	334
A-2	0.105	11.34	22.84	0.390	334
A-3	0.194	20.95	32.45	0.380	334
A-4	0.323	34.88	46.38	0.350	334
A-5	0.677	73.12	84.62	0.340	334
A-6	0.806	87.05	98.55	0.340	334
A-7	0.895	96.66	108.16	0.330	334
A-8	0.968	104.54	116.04	0.340	334
B-1				0.390	335
B-2				0.340	335
B-3				0.350	335
B-4				0.350	335
B-5				0.410	335
B-6				0.440	335
B-7				0.490	335
B-8				0.500	335
Digital Numbers Used:		85 / 138		End Time:	12:14 PM

Interpoll Laboratories
(763) 786-6020

EPA Method 2 Field Data Sheet

Job	MSI / Manitowoc PU				
Source	No. 9 Boiler				
Test	2M	Run 8	Date	7/24/2013	
Stack Diameter (in.)	108				
Dry Bulb (°F)	335	Wet Bulb (°F)	140		
Moisture Content (%)	12.90				
Monometer	Fluid				
Barometric Pressure	29.44				
Static Pressure +/-	-0.33				
Operators	AW / NB				
Pitot No.	04-5+-P1	Pitot Coeff.	0.8310		

Cross-section View	Elevation View

300 Klbs/Hr

Traverse Point Number	Fraction of Diameter	Distance From Stack Wall (in.)	Distance From End of Port (in.)	Velocity	Temperature of Gas (°F)
		Port Length (in.):	11.50	Start Time:	12:15 PM
A-1	0.032	3.46	14.96	0.440	335
A-2	0.105	11.34	22.84	0.420	335
A-3	0.194	20.95	32.45	0.370	335
A-4	0.323	34.88	46.38	0.350	335
A-5	0.677	73.12	84.62	0.340	335
A-6	0.806	87.05	98.55	0.380	335
A-7	0.895	96.66	108.16	0.370	335
A-8	0.968	104.54	116.04	0.390	335
B-1				0.360	336
B-2				0.330	336
B-3				0.340	336
B-4				0.340	336
B-5				0.390	336
B-6				0.420	336
B-7				0.490	336
B-8				0.490	336
Digital Numbers Used:		85 / 138		End Time:	12:21 PM

Interpoll Laboratories
(763) 786-6020

EPA Method 2 Field Data Sheet

Job	MSI / Manitowoc PU				
Source	No. 9 Boiler				
Test	2M	Run 9	Date	7/24/2013	
Stack Diameter (in.)	108				
Dry Bulb (°F)	336	Wet Bulb (°F)	140		
Moisture Content (%)	12.87				
Monometer	Fluid				
Barometric Pressure	29.44				
Static Pressure +/-	-0.35				
Operators	AW / NB				
Pitot No.	04-5+-P1	Pitot Coeff.	0.8310		

Cross-section View	Elevation View

300 Klbs/Hr

Traverse Point Number	Fraction of Diameter	Distance From Stack Wall (in.)	Distance From End of Port (in.)	Velocity	Temperature of Gas (°F)
		Port Length (in.):	11.50	Start Time:	12:22 PM
A-1	0.032	3.46	14.96	0.430	336
A-2	0.105	11.34	22.84	0.390	336
A-3	0.194	20.95	32.45	0.340	336
A-4	0.323	34.88	46.38	0.330	336
A-5	0.677	73.12	84.62	0.370	336
A-6	0.806	87.05	98.55	0.360	336
A-7	0.895	96.66	108.16	0.380	336
A-8	0.968	104.54	116.04	0.380	336
B-1				0.350	336
B-2				0.350	336
B-3				0.360	336
B-4				0.340	336
B-5				0.390	336
B-6				0.410	336
B-7				0.440	336
B-8				0.490	336
Digital Numbers Used:		85 / 138		End Time:	12:28 PM

Interpoll Laboratories
(763) 786-6020

EPA Method 2 Field Data Sheet

Job	MSI / Manitowoc PU				
Source	No. 9 Boiler				
Test	2M	Run	10	Date	7/24/2013
Stack Diameter (in.)	108				
Dry Bulb (°F)	338	Wet Bulb (°F)	140		
Moisture Content (%)	12.80				
Monometer	Fluid				
Barometric Pressure	29.44				
Static Pressure +/-	-0.37				
Operators	AW / NB				
Pitot No.	04-5+-P1	Pitot Coeff.	0.8310		

Cross-section View	Elevation View

300 Klbs/Hr

Traverse Point Number	Fraction of Diameter	Distance From Stack Wall (in.)	Distance From End of Port (in.)	Velocity	Temperature of Gas (°F)
		Port Length (in.):	11.50	Start Time:	12:29 PM
A-1	0.032	3.46	14.96	0.430	338
A-2	0.105	11.34	22.84	0.390	338
A-3	0.194	20.95	32.45	0.330	338
A-4	0.323	34.88	46.38	0.340	338
A-5	0.677	73.12	84.62	0.350	338
A-6	0.806	87.05	98.55	0.360	338
A-7	0.895	96.66	108.16	0.380	338
A-8	0.968	104.54	116.04	0.380	338
B-1				0.370	337
B-2				0.340	337
B-3				0.330	337
B-4				0.340	337
B-5				0.380	337
B-6				0.430	337
B-7				0.490	337
B-8				0.500	337
Digital Numbers Used:		85 / 138		End Time:	12:35 PM

APPENDIX C

REFERENCE METHOD COMPUTER PRINTOUTS

MSI / Manitowoc PU
Manitowoc, WI
No. 9 Boiler

7/23-24/2013
Test 2N Run 1
177 Klbs/Hr

Volumetric Flow Rate Data

Number of Sample Points 16

Point Number		Delta p	Sq. root delta p	Temperature	Time
1	A-1	0.210	0.458	310	9:15 PM
2	A-2	0.230	0.480	310	
3	A-3	0.220	0.469	310	
4	A-4	0.220	0.469	310	
5	A-5	0.210	0.458	310	
6	A-6	0.210	0.458	310	
7	A-7	0.220	0.469	310	
8	A-8	0.220	0.469	310	
9	B-1	0.220	0.469	308	
10	B-2	0.220	0.469	308	
11	B-3	0.210	0.458	308	
12	B-4	0.180	0.424	308	
13	B-5	0.220	0.469	308	
14	B-6	0.250	0.500	308	
15	B-7	0.240	0.490	308	
16	B-8	0.290	0.539	308	9:25 PM
Average		0.223	0.472	309	

Moisture Content Data	
Dry Bulb (°F)	309
Wet Bulb (°F)	137.0
TRA	1.13
Vapor Pressure of Water	5.45
ZT	172.00
PM	361.39
Barometric Pressure	29.29
Moisture Content	12.36
O_2 %	9.125
CO_2 %	11.456
Standard CFH	4,906,673
K Standard CFH	81.778

Flow Rate Data	
Static Pressure	-0.69
Pitot Coefficient	0.831
Duct Width (in.)	0.0
Duct Length (in.)	0.0
Duct Area (ft^2)	0.0
Stack Diameter (in.)	108.0
Stack Area (ft^2)	63.6173
Molecular Weight (dry)	30.198
Molecular Weight (wet)	28.69
Stack Pressure	29.239
Feet per Second	31.93
Actual CFM	121877.47
DSCFM	71670.32

Field Calculations

Raw Data Table

Instrument	ppm or %	Zero	Span	Cylinder Value	Gas Corrected for Calibration
O_2 (dry)	9.26	0.13	10.84	10.70	**9.13**
CO_2 (wet)	9.99	0.03	8.26	8.30	**10.04**
NOx (wet)	56.77	0.08	49.83	50.40	**57.43**
SO_2 (wet)	55.64	0.19	49.80	49.60	**55.44**
CO (wet)	13.26	0.06	50.45	50.80	**13.30**

Moisture	12.36	**Standard CFH**	**4,906,673**
Fuel Factor	1877	K Standard CFM	81.778
DSCFM	71670		

Results

Start	**9:15 PM**	**Gases Start**	**9:15 PM**
Stop	**9:25 PM**	**Gases Stop**	**9:35 PM**

CO_2 %, wet	**10.0**
NOX ppm, wet	**57.4**
NOx LB/mmBTU	**0.128**
SO_2 ppm, wet	**55.4**
SO_2 LB/mmBTU	**0.172**
CO ppm, wet	**13.30**
CO LB/mmBTU	**0.018**
SCFH	**4,907,000**
WAF applied	**0.9950**

MPU03488

MSI / Manitowoc PU
Manitowoc, WI
No. 9 Boiler
7/23-24/2013
Run 1

Time	SO_2 ppm, w	Nox ppm, w	$\%O_2$, d	$\%\ CO_2$, w	CO ppm, w
21:10	44.7	61.82	9.129	10.16	12.83
21:11	46.25	61.88	9.184	10.09	13.25
21:12	50.44	60.4	9.114	10.16	13.31
21:13	54.31	59.33	9.113	10.08	12.05
21:14	55.6	56.86	9.129	10.14	13.1
21:15	58.62	57.58	9.157	10.12	13.32
21:16	58.97	56.03	9.205	10.02	12.38
21:17	58.58	57.94	9.332	9.942	11.82
21:18	58.37	56.16	9.436	9.921	11.39
21:19	58.12	55.16	9.381	9.916	14.42
21:20	59.87	54.84	9.335	9.959	14.16
21:21	62.02	54.51	9.29	9.923	12.65
21:22	60.22	55.08	9.27	9.945	13.26
21:23	54.77	57.03	9.381	9.806	12.18
21:24	46.9	54.65	9.446	9.825	14.51
21:25	46.24	55.86	9.371	9.881	14.57
21:26	37.62	60.44	9.245	10.01	12.97
21:27	45.95	56.41	9.192	9.984	13.45
21:28	63.28	53.59	9.241	9.947	14.42
21:29	69.54	53.43	9.264	9.905	14.14
21:30	78.09	53.16	9.232	9.956	14.18
Average	**55.641**	**56.770**	**9.259**	**9.985**	**13.255**

MPU03489

MSI / Manitowoc PU
Manitowoc, WI
No. 9 Boiler

7/23-24/2013
Test 2N Run 2
177 Klbs/Hr

Volumetric Flow Rate Data

Number of Sample Points 16

Point Number		Delta p	Sq. root delta p	Temperature	Time
1	A-1	0.190	0.436	313	9:45 PM
2	A-2	0.180	0.424	313	
3	A-3	0.170	0.412	313	
4	A-4	0.170	0.412	313	
5	A-5	0.210	0.458	313	
6	A-6	0.200	0.447	313	
7	A-7	0.190	0.436	313	
8	A-8	0.190	0.436	313	
9	B-1	0.210	0.458	310	
10	B-2	0.190	0.436	310	
11	B-3	0.220	0.469	310	
12	B-4	0.200	0.447	310	
13	B-5	0.260	0.510	310	
14	B-6	0.310	0.557	310	
15	B-7	0.330	0.574	310	
16	B-8	0.340	0.583	310	9:55 PM
Average		0.223	0.469	312	

Moisture Content Data		Flow Rate Data	
Dry Bulb (°F)	312		
Wet Bulb (°F)	136.0	Static Pressure	-0.69
TRA	1.13	Pitot Coefficient	0.831
Vapor Pressure of Water	5.30		
ZT	175.50	Duct Width (in.)	0.00
PM	343.66	Duct Length (in.)	0.00
Barometric Pressure	29.29	Duct Area (ft^2)	0.00
		Stack Diameter (in.)	108.00
		Stack Area (ft^2)	63.62
Moisture Content	11.75		
		Molecular Weight (dry)	30.164
O_2 %	9.224	Molecular Weight (wet)	28.734
CO_2 %	11.216	Stack Pressure	29.239
		Feet per Second	31.738
Standard CFH	4,861,324	Actual CFM	121143.6
K Standard CFH	81.022	DSCFM	71499.25

Field Calculations

Raw Data Table

Instrument	ppm or %	Zero	Span	Cylinder Value	Gas Corrected for Calibration
O_2 (dry)	9.38	0.14	10.86	10.70	**9.22**
CO_2 (wet)	9.86	0.02	8.27	8.30	**9.90**
NOx (wet)	57.73	0.13	49.59	50.40	**58.70**
SO_2 (wet)	74.92	0.08	50.13	49.60	**74.18**
CO (wet)	17.49	0.08	50.65	50.80	**17.49**

Moisture	11.75	**Standard CFH**	4,861,324
Fuel Factor	1877	K Standard CFM	81.022
DSCFM	71499		

Results

Start	**9:45 PM**	**Gases Start**	**9:45 PM**
Stop	**9:55 PM**	**Gases Stop**	**10:05 PM**

CO_2 %, wet	**9.9**
NOX ppm, wet	**58.7**
NOx LB/mmBTU	**0.133**
SO_2 ppm, wet	**74.2**
SO_2 LB/mmBTU	**0.234**
CO ppm, wet	**17.49**
CO LB/mmBTU	**0.024**
SCFH	**4,861,000**
WAF applied	**0.9950**

MPU03490

MSI / Manitowoc PU
Manitowoc, WI
No. 9 Boiler
7/23-24/2013
Run 2

Time	SO_2 ppm, w	Nox ppm, w	$\%O_2$, d	% CO_2, w	CO ppm, w
21:45	63.9	57.12	9.189	9.975	16.15
21:46	59.48	60.34	9.272	9.867	16.91
21:47	60.7	59.93	9.414	9.666	18.4
21:48	65.01	60.19	9.483	9.664	14.89
21:49	69.46	59.43	9.491	9.722	17.59
21:50	71.04	58.7	9.504	9.721	17.13
21:51	76.9	57.1	9.457	9.794	14.73
21:52	77.32	56.89	9.46	9.852	16.26
21:53	71.74	57.99	9.446	9.856	17.71
21:54	74.49	56.46	9.426	9.821	17.36
21:55	80.31	57.19	9.423	9.84	18.11
21:56	76.01	58.44	9.458	9.759	17.3
21:57	79.22	54.97	9.538	9.778	18.11
21:58	86.95	54.84	9.468	9.838	20.14
21:59	86.43	55.35	9.387	9.887	19.48
22:00	86.56	54.21	9.365	9.922	17.69
22:01	86.79	55.64	9.281	10.05	18.53
22:02	82.73	55.67	9.192	10.1	18.87
22:03	75.95	58.48	9.194	10.04	16.91
22:04	69.85	60.91	9.236	9.976	17.85
22:05	72.54	62.44	9.211	9.899	17.212
Average	**74.923**	**57.728**	**9.376**	**9.858**	**17.492**

MSI / Manitowoc PU
Manitowoc, WI
No. 9 Boiler

7/23-24/2013
Test 2N Run 3
177 Klbs/Hr

Volumetric Flow Rate Data

Number of Sample Points 16

Point Number		Delta p	Sq. root delta p	Temperature	Time
1	A-1	0.190	0.436	313	10:15 PM
2	A-2	0.190	0.436	313	
3	A-3	0.200	0.447	313	
4	A-4	0.210	0.458	313	
5	A-5	0.230	0.480	313	
6	A-6	0.220	0.469	313	
7	A-7	0.210	0.458	313	
8	A-8	0.220	0.469	313	
9	B-1	0.210	0.458	311	
10	B-2	0.210	0.458	311	
11	B-3	0.220	0.469	311	
12	B-4	0.240	0.490	311	
13	B-5	0.230	0.480	311	
14	B-6	0.250	0.500	311	
15	B-7	0.280	0.529	311	
16	B-8	0.270	0.520	311	10:25 PM
Average		0.224	0.472	312	

Moisture Content Data		Flow Rate Data	
Dry Bulb (°F)	312		
Wet Bulb (°F)	135.0	Static Pressure	-0.69
TRA	1.13	Pitot Coefficient	0.831
Vapor Pressure of Water	5.17		
ZT	177.00	Duct Width (in.)	0.00
PM	328.37	Duct Length (in.)	0.00
Barometric Pressure	29.29	Duct Area (ft^2)	0.00
		Stack Diameter (in.)	108.00
		Stack Area (ft^2)	63.62
Moisture Content	11.23		
		Molecular Weight (dry)	30.151
O_2 %	9.377	Molecular Weight (wet)	28.786
CO_2 %	11.098	Stack Pressure	29.239
		Feet per Second	31.974
Standard CFH	4,894,397	Actual CFM	122046.82
K Standard CFH	81.573	DSCFM	72412.35

Field Calculations

Raw Data Table

Instrument	ppm or %	Zero	Span	Cylinder Value	Gas Corrected for Calibration
O_2 (dry)	9.49	0.14	10.81	10.7	**9.38**
CO_2 (wet)	9.83	0.02	8.29	8.3	**9.85**
NOx (wet)	49.30	0.08	49.57	50.4	**50.12**
SO_2 (wet)	83.10	0.06	50.29	49.6	**82.01**
CO (wet)	17.65	0.12	50.48	50.80	**17.69**

Moisture	11.23	**Standard CFH**	**4,894,397**
Fuel Factor	1877	K Standard CFM	81.573
DSCFM	72412		

Results

Start	**10:15 PM**	**Gases Start**	**10:15 PM**
Stop	**10:25 PM**	**Gases Stop**	**10:35 PM**

CO_2 %, wet	**9.9**
NOX ppm, wet	**50.1**
NOx LB/mmBTU	**0.114**
SO_2 ppm, wet	**82.0**
SO_2 LB/mmBTU	**0.259**
CO ppm, wet	**17.69**
CO LB/mmBTU	**0.024**
SCFH	**4,894,000**
WAF applied	**0.9950**

MPU03492

MSI / Manitowoc PU
Manitowoc, WI
No. 9 Boiler
7/23-24/2013
Run 3

Time	SO_2 ppm, w	Nox ppm, w	$\%O_2$, d	$\% CO_2$, w	CO ppm, w
22:15	83.89	50.85	9.288	9.697	18.77
22:16	86.52	48.21	9.336	9.67	17.46
22:17	94.8	46.83	9.354	9.685	19.65
22:18	93.91	45.52	9.343	9.757	19.67
22:19	88.78	45.85	9.248	9.795	16.04
22:20	82.72	47.87	9.256	9.782	16.89
22:21	80.52	48.88	9.275	9.774	18.29
22:22	80.1	48.71	9.275	9.821	19.74
22:23	83.4	48.03	9.258	9.855	18.81
22:24	86	47.84	9.189	9.801	16.75
22:25	82.78	48.42	9.228	9.846	16.75
22:26	85.29	47.22	9.248	9.893	18.45
22:27	92.33	47.06	9.179	9.89	17.94
22:28	91.4	48.43	9.131	9.923	18.22
22:29	88.87	50.45	9.359	9.943	17.29
22:30	86.98	50.09	10.24	9.952	18.03
22:31	77.64	51.73	10.32	9.971	18.25
22:32	74.04	51.22	10.08	9.916	17.06
22:33	72.21	52.45	10.04	9.961	17.36
22:34	68.11	54.88	9.817	9.919	14.26
22:35	64.87	54.73	9.849	9.59	15.01
Average	**83.103**	**49.299**	**9.491**	**9.831**	**17.652**

MSI / Manitowoc PU
Manitowoc, WI
No. 9 Boiler

7/23-24/2013
Test 2N Run 4
177 Klbs/Hr

Volumetric Flow Rate Data

Number of Sample Points 16

Point Number		Delta p	Sq. root delta p	Temperature	Time
1	A-1	0.230	0.480	310	10:45 PM
2	A-2	0.210	0.458	310	
3	A-3	0.200	0.447	310	
4	A-4	0.210	0.458	310	
5	A-5	0.230	0.480	310	
6	A-6	0.230	0.480	310	
7	A-7	0.220	0.469	310	
8	A-8	0.210	0.458	310	
9	B-1	0.200	0.447	312	
10	B-2	0.200	0.447	312	
11	B-3	0.190	0.436	312	
12	B-4	0.210	0.458	312	
13	B-5	0.210	0.458	312	
14	B-6	0.220	0.469	312	
15	B-7	0.250	0.500	312	
16	B-8	0.280	0.529	312	10:55 PM
Average		0.219	0.467	311	

Moisture Content Data	
Dry Bulb (°F)	311
Wet Bulb (°F)	136.0
TRA	1.13
Vapor Pressure of Water	5.30
ZT	175.00
PM	343.54
Barometric Pressure	29.29
Moisture Content	11.71
O_2 %	9.245
CO_2 %	11.158
Standard CFH	4,857,361
K Standard CFH	80.956

Flow Rate Data	
Static Pressure	0.70
Pitot Coefficient	0.831
Duct Width (in.)	0
Duct Length (in.)	0
Duct Area (ft^2)	0
Stack Diameter (in.)	108
Stack Area (ft^2)	63.6172512
Molecular Weight (dry)	30.155
Molecular Weight (wet)	28.732
Stack Pressure	29.341
Feet per Second	31.581
Actual CFM	120545.02
DSCFM	71477.39

Field Calculations

Raw Data Table

Instrument	ppm or %	Zero	Span	Cylinder Value	Gas Corrected for Calibration
O_2 (dry)	9.32	0.16	10.77	10.7	**9.24**
CO_2 (wet)	9.76	0.04	8.23	8.3	**9.85**
NOx (wet)	56.06	0.06	49.96	50.4	**56.57**
SO_2 (wet)	61.76	0.10	50.27	49.6	**60.96**
CO (wet)	17.05	0.10	50.42	50.80	**17.11**

Moisture	11.71	**Standard CFH**	**4,857,361**
Fuel Factor	1877	K Standard CFM	80.956
DSCFM	71477		

Results

Start	**10:45 PM**	**Gases Start**	**10:45 PM**
Stop	**10:55 PM**	**Gases Stop**	**11:05 PM**

CO_2 %, wet	**9.9**
NOX ppm, wet	**56.6**
NOx LB/mmBTU	**0.129**
SO_2 ppm, wet	**61.0**
SO_2 LB/mmBTU	**0.193**
CO ppm, wet	**17.11**
CO LB/mmBTU	**0.024**
SCFH	**4,857,000**
WAF applied	**0.9950**

MPU03494

MSI / Manitowoc PU
Manitowoc, WI
No. 9 Boiler
7/23-24/2013
Run 4

Time	SO_2 ppm, w	Nox ppm, w	$\%O_2$, d	% CO_2, w	CO ppm, w
22:45	73.92	55.46	9.252	9.718	17.11
22:46	73.68	55.06	9.296	9.666	17.19
22:47	74.27	54.03	9.364	9.613	16.79
22:48	72.9	53.49	9.387	9.573	18.56
22:49	69.32	53.27	9.461	9.535	16.5
22:50	67.31	52.93	9.419	9.594	16.16
22:51	68.35	52.18	9.417	9.638	18.27
22:52	43.86	61.23	9.494	9.756	18.01
22:53	16.83	67.08	9.407	9.83	18.78
22:54	12.97	67.1	9.367	9.843	17.71
22:55	13.09	66.04	9.37	9.863	17.29
22:56	17.28	61.02	9.312	9.861	19.37
22:57	42.34	55.65	9.33	9.729	17.62
22:58	59.01	54.32	9.323	9.784	18.02
22:59	68.81	54.42	9.261	9.772	16.62
23:00	77.75	53.72	9.291	9.781	15.14
23:01	85.62	53.12	9.257	9.808	16.1
23:02	89.81	53.19	9.222	9.821	16.93
23:03	90.55	52.85	9.246	9.839	14.82
23:04	92.65	51.54	9.183	9.884	14.84
23:05	86.62	49.55	9.102	9.968	16.21
Average	**61.759**	**56.060**	**9.322**	**9.756**	**17.050**

MSI / Manitowoc PU
Manitowoc, WI
No. 9 Boiler

7/23-24/2013
Test 2N Run 5
177 Klbs/Hr

Volumetric Flow Rate Data

Number of Sample Points 16

Point Number		Delta p	Sq. root delta p	Temperature	Time
1	A-1	0.240	0.490	310	11:15 PM
2	A-2	0.230	0.480	310	
3	A-3	0.210	0.458	310	
4	A-4	0.220	0.469	310	
5	A-5	0.230	0.480	310	
6	A-6	0.210	0.458	310	
7	A-7	0.220	0.469	310	
8	A-8	0.220	0.469	310	
9	B-1	0.180	0.424	309	
10	B-2	0.170	0.412	309	
11	B-3	0.180	0.424	309	
12	B-4	0.200	0.447	309	
13	B-5	0.250	0.500	309	
14	B-6	0.240	0.490	309	
15	B-7	0.260	0.510	309	
16	B-8	0.270	0.520	309	11:25 PM
Average		0.221	0.469	310	

Moisture Content Data	
Dry Bulb (°F)	310
Wet Bulb (°F)	136.0
TRA	1.13
Vapor Pressure of Water	5.30
ZT	173.50
PM	345.79
Barometric Pressure	29.29
Moisture Content	11.83
O_2 %	10.425
CO_2 %	11.203
Standard CFH	4,867,181
K Standard CFH	81.12

Flow Rate Data	
Static Pressure	-0.70
Pitot Coefficient	0.831
Duct Width (in.)	0
Duct Length (in.)	0
Duct Area (ft^2)	0
Stack Diameter (in.)	108
Stack Area (ft^2)	63.6172512
Molecular Weight (dry)	30.21
Molecular Weight (wet)	28.766
Stack Pressure	29.239
Feet per Second	31.694
Actual CFM	120978.17
DSCFM	71525.95

Field Calculations

Raw Data Table

Instrument	ppm or %	Zero	Span	Cylinder Value	Gas Corrected for Calibration
O_2 (dry)	10.54	0.12	10.82	10.7	**10.43**
CO_2 (wet)	9.78	0.03	8.23	8.3	**9.88**
NOx (wet)	53.55	0.08	50.18	50.4	**53.79**
SO_2 (wet)	99.10	0.11	50.12	49.6	**98.18**
CO (wet)	15.33	0.10	50.54	50.80	**15.34**

Moisture	11.83	**Standard CFH**	**4,867,181**
Fuel Factor	**1877**	K Standard CFM	81.12
DSCFM	71526		

Results

Start	**11:15 PM**	**Gases Start**	**11:15 PM**
Stop	**11:25 PM**	**Gases Stop**	**11:35 PM**

CO_2 %, wet	**9.9**
NOX ppm, wet	**53.8**
NOx LB/mmBTU	**0.122**
SO_2 ppm, wet	**98.2**
SO_2 LB/mmBTU	**0.310**
CO ppm, wet	**15.34**
CO LB/mmBTU	**0.021**
SCFH	**4,867,000**
WAF applied	**0.9950**

MPU03496

MSI / Manitowoc PU
Manitowoc, WI
No. 9 Boiler
7/23-24/2013
Run 5

Time	SO_2 ppm, w	Nox ppm, w	$\%O_2$, d	$\% CO_2$, w	CO ppm, w
23:15	87.6	53.26	9.2	9.817	14.48
23:16	99.21	53.55	9.176	9.753	14.16
23:17	100.6	53.09	9.178	9.709	15.14
23:18	103.3	52.47	9.452	9.79	13.86
23:19	106.9	53.89	10.79	9.888	16.03
23:20	103.5	54.41	10.84	9.81	15.54
23:21	98.68	55.43	10.89	9.786	13.31
23:22	93.43	56.02	10.93	9.768	15.92
23:23	96.52	56.09	11	9.671	15.87
23:24	90.69	55.68	11.08	9.607	15.77
23:25	98.74	52.82	11.02	9.643	15.89
23:26	102.7	52.42	10.94	9.762	15.34
23:27	101.3	51.39	10.93	9.759	16.8
23:28	102.1	51.35	10.86	9.817	17.17
23:29	98.41	52.55	10.88	9.823	15.04
23:30	100.2	53.65	10.87	9.819	14.45
23:31	102.1	53.25	10.82	9.865	13.42
23:32	102.5	52.65	10.81	9.898	15.57
23:33	101	53.03	10.8	9.884	16.25
23:34	96.92	54.55	10.89	9.801	15.73
23:35	94.68	52.9	9.984	9.8	16.18
Average	**99.099**	**53.545**	**10.540**	**9.784**	**15.330**

MSI / Manitowoc PU
Manitowoc, WI
No. 9 Boiler

7/23-24/2013
Test 2N Run 6
177 Klbs/Hr

Volumetric Flow Rate Data

Number of Sample Points 16

Point Number		Delta p	Sq. root delta p	Temperature	Time
1	A-1	0.220	0.469	311	11:45 PM
2	A-2	0.230	0.480	311	
3	A-3	0.210	0.458	311	
4	A-4	0.220	0.469	311	
5	A-5	0.230	0.480	311	
6	A-6	0.200	0.447	311	
7	A-7	0.210	0.458	311	
8	A-8	0.200	0.447	311	
9	B-1	0.200	0.447	309	
10	B-2	0.190	0.436	309	
11	B-3	0.200	0.447	309	
12	B-4	0.230	0.480	309	
13	B-5	0.240	0.490	309	
14	B-6	0.220	0.469	309	
15	B-7	0.250	0.500	309	
16	B-8	0.240	0.490	309	11:55 PM
Average		0.218	0.467	310	

Moisture Content Data		Flow Rate Data	
Dry Bulb (°F)	310		
Wet Bulb (°F)	136.0	Static Pressure	-0.69
TRA	1.13	Pitot Coefficient	0.831
Vapor Pressure of Water	5.30		
ZT	174.00	Duct Width (in.)	0.00
PM	345.26	Duct Length (in.)	0.00
Barometric Pressure	29.29	Duct Area (ft^2)	0.00
		Stack Diameter (in.)	108.00
		Stack Area (ft^2)	63.62
Moisture Content	11.81		
		Molecular Weight (dry)	30.165
O_2 %	9.226	Molecular Weight (wet)	28.728
CO_2 %	11.224	Stack Pressure	29.239
		Feet per Second	31.584
Standard CFH	4,847,223	Actual CFM	120557.34
K Standard CFH	80.787	DSCFM	71247.73

Field Calculations

Raw Data Table

Instrument	ppm or %	Zero	Span	Cylinder Value	Gas Corrected for Calibration
O_2 (dry)	9.37	0.07	10.85	10.7	**9.23**
CO_2 (wet)	9.81	0.03	8.23	8.3	**9.90**
NOx (wet)	55.00	0.07	50.02	50.4	**55.43**
SO_2 (wet)	85.65	0.10	50.55	49.6	**84.12**
CO (wet)	15.14	0.14	50.53	50.80	**15.12**
Moisture	11.81		**Standard CFH**		**4,847,223**
Fuel Factor	1877		K Standard CFM		80.787
DSCFM	71248				

Results

Start	**11:45 PM**	**Gases Start**	**11:45 PM**
Stop	**11:55 PM**	**Gases Stop**	**12:05 AM**

CO_2 %, wet	**9.9**
NOX ppm, wet	**55.4**
NOx LB/mmBTU	**0.125**
SO_2 ppm, wet	**84.1**
SO_2 LB/mmBTU	**0.265**
CO ppm, wet	**15.12**
CO LB/mmBTU	**0.021**
SCFH	**4,847,000**
WAF applied	**0.9950**

MPU03498

MSI / Manitowoc PU
Manitowoc, WI
No. 9 Boiler
7/23-24/2013
Run 6

Time	SO_2 ppm, w	Nox ppm, w	$\%O_2$, d	% CO_2, w	CO ppm, w
23:45	90.09	53.33	9.401	9.862	12.13
23:46	89.91	52.71	9.381	9.858	12.28
23:47	96.1	52.03	9.342	9.908	14.29
23:48	95.52	53.53	9.3	9.911	13.86
23:49	91.56	54.56	9.232	9.942	12.45
23:50	87.51	55.48	9.27	9.926	14.03
23:51	84.12	56.48	9.282	9.949	14.68
23:52	80.83	58.4	9.262	9.947	15.83
23:53	78.94	58.03	9.333	9.861	15.53
23:54	81.28	57.86	9.359	9.842	14.11
23:55	85.29	57.52	9.416	9.795	14.87
23:56	88.91	55.71	9.482	9.776	13.55
23:57	93.68	54.4	9.414	9.788	15.03
23:58	88.91	55.22	9.455	9.778	15.3
23:59	89.4	53.5	9.432	9.791	16.15
0:00	85.47	52.25	9.374	9.878	17.67
0:01	80.62	54.72	9.3	9.891	17.67
0:02	74.46	54.65	9.396	9.827	18.2
0:03	77.74	55.05	9.413	9.806	17.07
0:04	75.81	54.55	9.416	9.797	16.64
0:05	82.57	55.07	9.411	8.863	16.5
Average	**85.653**	**55.002**	**9.365**	**9.809**	**15.135**

MSI / Manitowoc PU
Manitowoc, WI
No. 9 Boiler

7/23-24/2013
Test 2N Run 7
177 Klbs/Hr

Volumetric Flow Rate Data

Number of Sample Points 16

Point Number		Delta p	Sq. root delta p	Temperature	Time
1	A-1	0.210	0.458	312	12:20 AM
2	A-2	0.200	0.447	312	
3	A-3	0.220	0.469	312	
4	A-4	0.210	0.458	312	
5	A-5	0.190	0.436	312	
6	A-6	0.210	0.458	312	
7	A-7	0.210	0.458	312	
8	A-8	0.200	0.447	312	
9	B-1	0.180	0.424	311	
10	B-2	0.190	0.436	311	
11	B-3	0.220	0.469	311	
12	B-4	0.230	0.480	311	
13	B-5	0.230	0.480	311	
14	B-6	0.250	0.500	311	
15	B-7	0.250	0.500	311	
16	B-8	0.240	0.490	311	12:30 AM
Average		0.215	0.463	312	

Moisture Content Data		Flow Rate Data	
Dry Bulb (°F)	312		
Wet Bulb (°F)	137.0	Static Pressure	-0.71
TRA	1.13	Pitot Coefficient	0.831
Vapor Pressure of Water	5.45		
ZT	174.50	Duct Width (in.)	0.00
PM	358.74	Duct Length (in.)	0.00
Barometric Pressure	29.29	Duct Area (ft^2)	0.00
		Stack Diameter (in.)	108.00
		Stack Area (ft^2)	63.62
Moisture Content	12.27		
		Molecular Weight (dry)	30.2
O_2 %	9.084	Molecular Weight (wet)	28.703
CO_2 %	11.479	Stack Pressure	29.238
		Feet per Second	31.391
Standard CFH	4,808,003	Actual CFM	119820.87
K Standard CFH	80.133	DSCFM	70301.26

Field Calculations

Raw Data Table

Instrument	ppm or %	Zero	Span	Cylinder Value	Gas Corrected for Calibration
O_2 (dry)	9.21	0.05	10.84	10.7	**9.08**
CO_2 (wet)	9.98	0.04	8.23	8.3	**10.07**
NOx (wet)	48.43	0.09	50.09	50.4	**48.73**
SO_2 (wet)	100.13	0.12	50.41	49.6	**98.65**
CO (wet)	15.86	0.10	50.49	50.80	**15.89**

Moisture	12.27	**Standard CFH**	**4,808,003**
Fuel Factor	1877	K Standard CFM	80.133
DSCFM	70301		

Results

Start	**12:20 AM**	**Gases Start**	**12:20 AM**
Stop	**12:30 AM**	**Gases Stop**	**12:40 AM**

CO_2 %, wet	**10.1**
NOX ppm, wet	**48.7**
NOx LB/mmBTU	**0.108**
SO_2 ppm, wet	**98.6**
SO_2 LB/mmBTU	**0.305**
CO ppm, wet	**15.89**
CO LB/mmBTU	**0.022**
SCFH	**4,808,000**
WAF applied	**0.9950**

MSI / Manitowoc PU
Manitowoc, WI
No. 9 Boiler
7/23-24/2013
Run 7

Time	SO_2 ppm, w	Nox ppm, w	$\%O_2$, d	% CO_2, w	CO ppm, w
0:20	107.4	45.42	9.113	10.01	15.45
0:21	100.3	46.53	9.169	10.01	15.83
0:22	95.09	46.58	9.224	9.983	17.62
0:23	104.7	45.04	9.168	10.02	17.64
0:24	107.4	44.79	9.158	10.03	16.64
0:25	102.3	47.11	9.096	10.1	15.6
0:26	98.6	48.38	9.05	10.11	16.2
0:27	93.74	51.26	9.095	10.02	16.32
0:28	88.55	52.01	9.309	9.861	14.84
0:29	90.68	51.18	9.354	9.875	17.04
0:30	95.42	48.39	9.361	9.878	17.43
0:31	102.5	47.64	9.312	9.917	15.56
0:32	104.7	46.67	9.31	9.881	16.61
0:33	108.9	45.47	9.255	9.993	16.89
0:34	99.5	48.59	9.25	9.98	15.86
0:35	107.1	46.2	9.158	10.16	17.35
0:36	107.3	49.66	9.087	10.02	13.6
0:37	100.2	52.41	9.131	9.948	14.15
0:38	97.2	51	9.231	9.951	13.94
0:39	95.29	51.96	9.287	9.912	14.7
0:40	95.89	50.65	9.294	9.869	13.83
Average	**100.131**	**48.426**	**9.210**	**9.978**	**15.862**

MSI / Manitowoc PU
Manitowoc, WI
No. 9 Boiler

7/23-24/2013
Test 2N Run 8
177 Klbs/Hr

Volumetric Flow Rate Data

Number of Sample Points 16

Point Number		Delta p	Sq. root delta p	Temperature	Time
1	A-1	0.190	0.436	311	12:50 PM
2	A-2	0.200	0.447	311	
3	A-3	0.180	0.424	311	
4	A-4	0.190	0.436	311	
5	A-5	0.200	0.447	311	
6	A-6	0.220	0.469	311	
7	A-7	0.210	0.458	311	
8	A-8	0.200	0.447	311	
9	B-1	0.180	0.424	310	
10	B-2	0.190	0.436	310	
11	B-3	0.200	0.447	310	
12	B-4	0.210	0.458	310	
13	B-5	0.200	0.447	310	
14	B-6	0.250	0.500	310	
15	B-7	0.260	0.510	310	
16	B-8	0.270	0.520	310	1:00 AM
Average		0.209	0.457	311	

Moisture Content Data		Flow Rate Data	
Dry Bulb (°F)	311		
Wet Bulb (°F)	137.0	Static Pressure	-0.07
TRA	1.13	Pitot Coefficient	0.831
Vapor Pressure of Water	5.45		
ZT	173.50	Duct Width (in.)	0.00
PM	359.51	Duct Length (in.)	0.00
Barometric Pressure	29.29	Duct Area (ft^2)	0.00
		Stack Diameter (in.)	108.00
		Stack Area (ft^2)	63.62
Moisture Content	12.28		
		Molecular Weight (dry)	30.224
O_2 %	9.081	Molecular Weight (wet)	28.723
CO_2 %	11.627	Stack Pressure	29.285
		Feet per Second	30.898
Standard CFH	4,746,221	Actual CFM	117938.35
K Standard CFH	79.104	DSCFM	69392.74

Field Calculations

Raw Data Table

Instrument	ppm or %	Zero	Span	Cylinder Value	Gas Corrected for Calibration
O_2 (dry)	9.23	0.08	10.86	10.7	**9.08**
CO_2 (wet)	10.18	0.05	8.30	8.3	**10.20**
NOx (wet)	57.43	0.08	50.10	50.4	**57.78**
SO_2 (wet)	78.33	0.11	49.95	49.6	**77.84**
CO (wet)	14.75	0.06	50.41	50.80	**14.82**

Moisture	12.28	**Standard CFH**	**4,746,221**
Fuel Factor	1877	K Standard CFM	79.104
DSCFM	69393		

Results

Start	**12:50 PM**	**Gases Start**	**12:50 PM**
Stop	**1:00 AM**	**Gases Stop**	**1:10 AM**

CO_2 %, wet	**10.2**
NOX ppm, wet	**57.8**
NOx LB/mmBTU	**0.127**
SO_2 ppm, wet	**77.8**
SO_2 LB/mmBTU	**0.238**
CO ppm, wet	**14.82**
CO LB/mmBTU	**0.020**
SCFH	**4,746,000**
WAF applied	**0.9950**

MSI / Manitowoc PU
Manitowoc, WI
No. 9 Boiler
7/23-24/2013
Run 8

Time	SO_2 ppm, w	Nox ppm, w	$\%O_2$, d	% CO_2, w	CO ppm, w
0:50	92.77	53.04	9.262	10.13	14.01
0:51	86.97	53.86	9.289	10.13	12.88
0:52	85.25	53.62	9.234	10.19	12.41
0:53	77.93	55.31	9.233	10.21	14.12
0:54	72.25	56.03	9.287	10.12	14.81
0:55	78.74	54.95	9.253	10.18	13.65
0:56	88.34	52.63	9.14	10.26	13.36
0:57	92.62	56.01	9.152	10.27	16
0:58	86.36	56.27	9.197	10.17	14.34
0:59	79.74	58.14	9.252	10.14	15.45
1:00	78.01	57.01	9.222	10.18	14.2
1:01	75.62	59.48	9.241	10.18	15.35
1:02	74.89	58.98	9.231	10.22	16.27
1:03	72.96	58.52	9.214	10.2	15.21
1:04	72.84	57.69	9.213	10.14	13.57
1:05	76.03	58.31	9.22	10.23	15.39
1:06	78.75	59.63	9.182	10.21	16.8
1:07	76.67	60.16	9.168	10.18	16.51
1:08	67.22	63.27	9.231	10.16	15.51
1:09	65.15	62.19	9.266	10.16	14.49
1:10	65.78	60.91	9.24	10.17	15.44
Average	**78.328**	**57.429**	**9.225**	**10.182**	**14.751**

MSI / Manitowoc PU
Manitowoc, WI
No. 9 Boiler

7/23-24/2013
Test 2N Run 9
177 Klbs/Hr

Volumetric Flow Rate Data

Number of Sample Points 16

Point Number		Delta p	Sq. root delta p	Temperature	Time
1	A-1	0.220	0.469	312	1:20 AM
2	A-2	0.230	0.480	312	
3	A-3	0.210	0.458	312	
4	A-4	0.200	0.447	312	
5	A-5	0.190	0.436	312	
6	A-6	0.210	0.458	312	
7	A-7	0.200	0.447	312	
8	A-8	0.210	0.458	312	
9	B-1	0.230	0.480	310	
10	B-2	0.210	0.458	310	
11	B-3	0.200	0.447	310	
12	B-4	0.200	0.447	310	
13	B-5	0.240	0.490	310	
14	B-6	0.250	0.500	310	
15	B-7	0.260	0.510	310	
16	B-8	0.250	0.500	310	1:30 AM
Average		0.219	0.468	311	

Moisture Content Data		Flow Rate Data	
Dry Bulb (°F)	311		
Wet Bulb (°F)	137.0	Static Pressure	-0.72
TRA	1.13	Pitot Coefficient	0.831
Vapor Pressure of Water	5.45		
ZT	174.00	Duct Width (in.)	0.00
PM	359.28	Duct Length (in.)	0.00
Barometric Pressure	29.29	Duct Area (ft^2)	0.00
		Stack Diameter (in.)	108.00
		Stack Area (ft^2)	63.62
Moisture Content	12.29		
		Molecular Weight (dry)	30.215
O_2 %	9.012	Molecular Weight (wet)	28.714
CO_2 %	11.588	Stack Pressure	29.237
		Feet per Second	31.694
Standard CFH	4,857,378	Actual CFM	120975.95
K Standard CFH	80.956	DSCFM	71008.1

Field Calculations

Raw Data Table

Instrument	ppm or %	Zero	Span	Cylinder Value	Gas Corrected for Calibration
O_2 (dry)	9.15	0.10	10.85	10.7	**9.01**
CO_2 (wet)	10.20	0.04	8.34	8.3	**10.16**
NOx (wet)	66.79	0.09	50.14	50.4	**67.17**
SO_2 (wet)	76.15	0.09	50.09	49.6	**75.45**
CO (wet)	16.89	0.10	50.29	50.80	**16.99**
Moisture	12.29		**Standard CFH**		**4,857,378**
Fuel Factor	1877		K Standard CFM		80.956
DSCFM	71008				

Results

Start	**1:20 AM**	**Gases Start**	**1:20 AM**
Stop	**1:30 AM**	**Gases Stop**	**1:40 AM**

CO_2 %, wet	**10.2**
NOX ppm, wet	**67.2**
NOx LB/mmBTU	**0.148**
SO_2 ppm, wet	**75.4**
SO_2 LB/mmBTU	**0.231**
CO ppm, wet	**16.99**
CO LB/mmBTU	**0.023**
SCFH	**4,857,000**
WAF applied	**0.9950**

MSI / Manitowoc PU
Manitowoc, WI
No. 9 Boiler
7/23-24/2013
Run 9

Time	SO_2 ppm, w	Nox ppm, w	$\%O_2$, d	% CO_2, w	CO ppm, w
1:20	76.44	66.7	9.072	10.25	16.52
1:21	74.41	64.62	9.11	10.26	15.29
1:22	75.6	65.09	9.124	10.22	16.7
1:23	73.17	67.14	9.188	10.23	17.84
1:24	73.22	66.66	9.16	10.23	14.83
1:25	72.59	67.28	9.161	10.2	15.85
1:26	66.5	69.06	9.237	10.11	16.32
1:27	60.14	67.67	9.24	10.12	16.75
1:28	69.76	67.7	9.216	10.1	18.4
1:29	76.6	65.74	9.181	10.18	17.24
1:30	79.62	64.65	9.168	10.18	18.02
1:31	78.04	65.03	9.14	10.14	17.8
1:32	81.22	64.07	9.143	10.2	17.46
1:33	83.16	64.2	9.1	10.25	18.56
1:34	81.92	64.96	9.13	10.2	17.1
1:35	80.32	64.75	9.161	10.2	16.3
1:36	85.68	64.21	9.023	10.35	16.43
1:37	81.42	69.2	9.031	10.28	16.06
1:38	80.88	69.85	9.084	10.25	17.23
1:39	73.54	73.18	9.197	10.13	16.42
1:40	74.9	70.81	9.274	10.08	17.47
Average	**76.149**	**66.789**	**9.150**	**10.198**	**16.885**

MSI / Manitowoc PU
Manitowoc, WI
No. 9 Boiler

7/23-24/2013
Test 2N Run 10
177 Klbs/Hr

Volumetric Flow Rate Data

Number of Sample Points 16

Point Number		Delta p	Sq. root delta p	Temperature	Time
1	A-1	0.200	0.447	312	1:50 AM
2	A-2	0.200	0.447	312	
3	A-3	0.220	0.469	312	
4	A-4	0.230	0.480	312	
5	A-5	0.210	0.458	312	
6	A-6	0.190	0.436	312	
7	A-7	0.180	0.424	312	
8	A-8	0.190	0.436	312	
9	B-1	0.190	0.436	310	
10	B-2	0.200	0.447	310	
11	B-3	0.220	0.469	310	
12	B-4	0.210	0.458	310	
13	B-5	0.200	0.447	310	
14	B-6	0.250	0.500	310	
15	B-7	0.270	0.520	310	
16	B-8	0.260	0.510	310	2:00 AM
Average		0.214	0.462	311	

Moisture Content Data		Flow Rate Data	
Dry Bulb (°F)	311		
Wet Bulb (°F)	136.0	Static Pressure	-0.07
TRA	1.13	Pitot Coefficient	0.831
Vapor Pressure of Water	5.30		
ZT	175.00	Duct Width (in.)	0.00
PM	343.90	Duct Length (in.)	0.00
Barometric Pressure	29.29	Duct Area (ft^2)	0.00
		Stack Diameter (in.)	108.00
		Stack Area (ft^2)	63.62
Moisture Content	11.74		
		Molecular Weight (dry)	30.195
O_2 %	9.056	Molecular Weight (wet)	28.763
CO_2 %	11.457	Stack Pressure	29.285
		Feet per Second	31.212
Standard CFH	4,791,412	Actual CFM	119139.15
K Standard CFH	79.857	DSCFM	70478.9

Field Calculations

Raw Data Table

Instrument	ppm or %	Zero	Span	Cylinder Value	Gas Corrected for Calibration
O_2 (dry)	9.19	0.07	10.85	10.7	**9.06**
CO_2 (wet)	10.13	0.03	8.32	8.3	**10.11**
NOx (wet)	68.24	0.14	50.13	50.4	**68.66**
SO_2 (wet)	76.57	0.10	50.15	49.6	**75.78**
CO (wet)	17.08	0.13	50.19	50.80	**17.20**
Moisture	11.74		**Standard CFH**		**4,791,412**
Fuel Factor	1877		K Standard CFM		79.857
DSCFM	70479				

Results

Start	**1:50 AM**	**Gases Start**	**1:50 AM**
Stop	**2:00 AM**	**Gases Stop**	**2:10 AM**

CO_2 %, wet	**10.1**
NOX ppm, wet	**68.7**
NOx LB/mmBTU	**0.152**
SO_2 ppm, wet	**75.8**
SO_2 LB/mmBTU	**0.234**
CO ppm, wet	**17.20**
CO LB/mmBTU	**0.023**
SCFH	**4,791,000**
WAF applied	**0.9950**

MSI / Manitowoc PU
Manitowoc, WI
No. 9 Boiler
7/23-24/2013
Run 10

Time	SO_2 ppm, w	Nox ppm, w	$\%O_2$, d	% CO_2, w	CO ppm, w
1:50	85.02	67.73	9.346	9.97	19.86
1:51	82.85	66.99	9.262	10.09	18.86
1:52	78.52	67.47	9.21	10.09	17.79
1:53	79.72	67.64	9.311	10.03	17.1
1:54	80.91	67.2	9.35	10.03	17.01
1:55	73.27	67.76	9.319	10.06	19.94
1:56	70.65	67.68	9.231	10.06	18.35
1:57	67.62	68.52	9.242	10.06	16.87
1:58	70.99	69.25	9.19	10.19	16.52
1:59	71.98	68.08	9.158	10.17	16.89
2:00	70.14	67.96	9.178	10.14	16.48
2:01	73.31	67.93	9.15	10.17	15.09
2:02	72.28	69.45	9.116	10.22	17.47
2:03	75.07	70.23	9.112	10.17	16.52
2:04	77.03	69.99	9.146	10.12	16.63
2:05	81.31	69.93	9.156	10.17	16.5
2:06	80.49	68.6	9.202	10.14	16.33
2:07	81.39	68.35	9.164	10.17	15.44
2:08	78.72	65.71	9.168	10.16	15.54
2:09	81.22	67.11	9.046	10.28	16.46
2:10	75.58	69.48	9	10.25	17.08
Average	**76.575**	**68.241**	**9.193**	**10.130**	**17.082**

MSI / Manitowoc PU
Manitowoc, WI
No. 9 Boiler

7/24/2013
Test 2M Run 1
300 Klbs/Hr

Volumetric Flow Rate Data

Number of Sample Points 16

Point Number		Delta p	Sq. root delta p	Temperature	Time
1	A-1	0.430	0.656	330	11:10 AM
2	A-2	0.410	0.640	330	
3	A-3	0.390	0.624	330	
4	A-4	0.380	0.616	330	
5	A-5	0.360	0.600	330	
6	A-6	0.380	0.616	330	
7	A-7	0.370	0.608	330	
8	A-8	0.380	0.616	330	
9	B-1	0.350	0.592	331	
10	B-2	0.340	0.583	331	
11	B-3	0.340	0.583	331	
12	B-4	0.330	0.574	331	
13	B-5	0.370	0.608	331	
14	B-6	0.410	0.640	331	
15	B-7	0.420	0.648	331	
16	B-8	0.430	0.656	331	11:16 AM
Average		0.381	0.616	331	

Moisture Content Data	
Dry Bulb (°F)	330
Wet Bulb (°F)	138.0
TRA	1.12
Vapor Pressure of Water	5.59
ZT	192.00
PM	353.21
Barometric Pressure	29.44
Standard Meter Volume	
Moisture Content	12.01
O_2 %	5.116
CO_2 %	15.269
Standard CFH	6,293,844
K Standard CFH	104.897

Flow Rate Data	
Static Pressure	-0.39
Pitot Coefficient	0.831
Duct Width (in.)	0.0
Duct Length (in.)	0.0
Duct Area (ft^2)	0.0
Stack Diameter (in.)	108.0
Stack Area (ft^2)	63.6173
Molecular Weight (dry)	30.648
Molecular Weight (wet)	29.129
Stack Pressure	29.411
Feet per Second	41.856
Actual CFM	159764.28
DSCFM	92299.76

Field Calculations

Raw Data Table

Instrument	ppm or %	Zero	Span	Cylinder Value	Gas Corrected for Calibration	
O_2 (dry)	5.20	0.06	10.82	10.70	**5.12**	dry
CO_2 (wet)	13.56	0.10	8.42	8.30	**13.44**	wet

Moisture	12.01	**Standard CFH**	**6,293,844**
Fuel Factor C	1840	K Standard CFM	104.897
DSCFM	92300		

Results

Start Time	**11:10 AM**
Stop Time	**11:16 AM**
Standard CFH	**6,294,000**
CO_2 %, wet	**13.44**
WAF applied	**0.9950**

MSI / Manitowoc PU
Manitowoc, WI
No. 9 Boiler

7/24/2013
Test 2M Run 2
300 Klbs/Hr

Volumetric Flow Rate Data

Number of Sample Points 16

Point Number		Delta p	Sq. root delta p	Temperature	Time
1	A-1	0.350	0.592	330	11:17 AM
2	A-2	0.320	0.566	330	
3	A-3	0.310	0.557	330	
4	A-4	0.270	0.520	330	
5	A-5	0.270	0.520	330	
6	A-6	0.270	0.520	330	
7	A-7	0.280	0.529	330	
8	A-8	0.270	0.520	330	
9	B-1	0.320	0.566	331	
10	B-2	0.330	0.574	331	
11	B-3	0.360	0.600	331	
12	B-4	0.330	0.574	331	
13	B-5	0.340	0.583	331	
14	B-6	0.340	0.583	331	
15	B-7	0.360	0.600	331	
16	B-8	0.380	0.616	331	11:23 AM
Average		0.319	0.564	331	

Moisture Content Data	
Dry Bulb (°F)	330
Wet Bulb (°F)	139.0
TRA	1.12
Vapor Pressure of Water	5.73
ZT	191.00
PM	368.90
Barometric Pressure	29.44
Standard Meter Volume	
Moisture Content	12.54
O_2 %	5.123
CO_2 %	15.305
Standard CFH	5,761,798
K Standard CFH	96.03

Flow Rate Data	
Static Pressure	-0.34
Pitot Coefficient	0.83
Duct Width (in.)	0.00
Duct Length (in.)	0.00
Duct Area (ft^2)	0.00
Stack Diameter (in.)	108.00
Stack Area (ft^2)	63.62
Molecular Weight (dry)	30.654
Molecular Weight (wet)	29.067
Stack Pressure	29.415
Feet per Second	38.313
Actual CFM	146240.44
DSCFM	83986.68

Field Calculations

Raw Data Table

Instrument	ppm or %	Zero	Span	Cylinder Value	Gas Corrected for Calibration	
O_2 (dry)	5.20	0.04	10.82	10.70	**5.12**	dry
CO_2 (wet)	13.56	0.08	8.44	8.30	**13.39**	wet

Moisture	12.54	**Standard CFH**	**5,761,798**
Fuel Factor C	1840	K Standard CFM	96.03
DSCFM	83987		

Results

Start Time	**11:17 AM**
Stop Time	**11:23 AM**
Standard CFH	**5,762,000**
CO_2 %, wet	**13.39**
WAF applied	**0.9950**

MSI / Manitowoc PU
Manitowoc, WI
No. 9 Boiler

7/24/2013
Test 2M Run 3
300 Klbs/Hr

Volumetric Flow Rate Data

Number of Sample Points 16

Point Number		Delta p	Sq. root delta p	Temperature	Time
1	A-1	0.350	0.592	328	11:24 AM
2	A-2	0.350	0.592	328	
3	A-3	0.340	0.583	328	
4	A-4	0.340	0.583	328	
5	A-5	0.360	0.600	328	
6	A-6	0.390	0.624	328	
7	A-7	0.400	0.632	328	
8	A-8	0.380	0.616	328	
9	B-1	0.310	0.557	329	
10	B-2	0.280	0.529	329	
11	B-3	0.260	0.510	329	
12	B-4	0.250	0.500	329	
13	B-5	0.310	0.557	329	
14	B-6	0.310	0.557	329	
15	B-7	0.320	0.566	329	
16	B-8	0.360	0.600	329	11:30 AM
Average		0.332	0.575	329	

Moisture Content Data		Flow Rate Data	
Dry Bulb (°F)	328		
Wet Bulb (°F)	140.0	Static Pressure	-0.37
TRA	1.12	Pitot Coefficient	0.831
Vapor Pressure of Water	5.88		
ZT	188.00	Duct Width (in.)	0.00
PM	387.09	Duct Length (in.)	0.00
Barometric Pressure	29.44	Duct Area (ft^2)	0.00
		Stack Diameter (in.)	108.00
Standard Meter Volume		Stack Area (ft^2)	63.62
Moisture Content	13.16		
		Molecular Weight (dry)	30.671
O_2 %	5.123	Molecular Weight (wet)	29.004
CO_2 %	15.414	Stack Pressure	29.413
		Feet per Second	39.067
Standard CFH	5,889,763	Actual CFM	149121.28
K Standard CFH	98.163	DSCFM	85243.87

Field Calculations

Raw Data Table

Instrument	ppm or %	Zero	Span	Cylinder Value	Gas Corrected for Calibration	
O_2 (dry)	5.20	0.04	10.82	10.70	**5.12**	dry
CO_2 (wet)	13.56	0.08	8.44	8.30	**13.39**	wet

Moisture	13.16	**Standard CFH**	**5,889,763**
Fuel Factor C	1840	K Standard CFM	98.163
DSCFM	85244		

Results

Start Time	**11:24 AM**
Stop Time	**11:30 AM**
Standard CFH	**5,890,000**
CO_2 %, wet	**13.39**
WAF applied	**0.9950**

MSI / Manitowoc PU
Manitowoc, WI
No. 9 Boiler
7/24/2013
Run 1-3

Time	$\%O_2$, d	$\%\ CO_2$, w
11:10	5.322	13.38
11:11	5.342	13.38
11:12	5.347	13.41
11:13	5.288	13.52
11:14	5.175	13.58
11:15	5.137	13.62
11:16	5.104	13.65
11:17	5.136	13.64
11:18	5.139	13.62
11:19	5.16	13.59
11:20	5.149	13.54
11:21	5.163	13.6
11:22	5.135	13.64
11:23	5.158	13.66
11:24	5.243	13.55
11:25	5.198	13.6
11:26	5.192	13.53
11:27	5.245	13.56
11:28	5.173	13.57
11:29	5.165	13.59
11:30	5.263	13.58
Average	**5.202**	**13.562**

MSI / Manitowoc PU
Manitowoc, WI
No. 9 Boiler

7/24/2013
Test 2M Run 4
300 Klbs/Hr

Volumetric Flow Rate Data

Number of Sample Points 16

Point Number		Delta p	Sq. root delta p	Temperature	Time
1	A-1	0.320	0.566	328	11:40 AM
2	A-2	0.340	0.583	328	
3	A-3	0.360	0.600	328	
4	A-4	0.390	0.624	328	
5	A-5	0.430	0.656	328	
6	A-6	0.440	0.663	328	
7	A-7	0.440	0.663	328	
8	A-8	0.420	0.648	328	
9	B-1	0.350	0.592	329	
10	B-2	0.360	0.600	329	
11	B-3	0.370	0.608	329	
12	B-4	0.380	0.616	329	
13	B-5	0.410	0.640	329	
14	B-6	0.380	0.616	329	
15	B-7	0.390	0.624	329	
16	B-8	0.380	0.616	329	11:46 AM
Average		0.385	0.620	329	

Moisture Content Data	
Dry Bulb (°F)	328
Wet Bulb (°F)	141.0
TRA	1.12
Vapor Pressure of Wate	6.04
ZT	187.00
PM	403.45
Barometric Pressure	29.44
Standard Meter Volume	
Moisture Content	13.72
O_2 %	5.13
CO_2 %	15.394
Standard CFH	6,358,898
K Standard CFH	105.982

Flow Rate Data	
Static Pressure	-0.35
Pitot Coefficient	0.831
Duct Width (in.)	0
Duct Length (in.)	0
Duct Area (ft^2)	0
Stack Diameter (in.)	108
Stack Area (ft^2)	63.6172512
Molecular Weight (dry)	30.668
Molecular Weight (wet)	28.931
Stack Pressure	29.414
Feet per Second	42.177
Actual CFM	160991.13
DSCFM	91445.14

Field Calculations

Raw Data Table

Instrument	ppm or %	Zero	Span	Cylinder Value	Gas Corrected for Calibration	
O_2 (dry)	5.20	0.04	10.81	10.70	**5.13**	dry
CO_2 (wet)	13.39	0.06	8.39	8.30	**13.28**	wet

Moisture	13.72	**Standard CFH**	**6,358,898**
Fuel Factor C	1840	K Standard CFM	105.982
DSCFM	91445		

Results

Start Time	**11:40 AM**
Stop Time	**11:46 AM**
Standard CFH	**6,359,000**
CO_2 %, wet	**13.28**
WAF applied	**0.9950**

MSI / Manitowoc PU
Manitowoc, WI
No. 9 Boiler

7/24/2013
Test 2M Run 5
300 Klbs/Hr

Volumetric Flow Rate Data

Number of Sample Points 16

Point Number		Delta p	Sq. root delta p	Temperature	Time
1	A-1	0.390	0.624	332	11:47 AM
2	A-2	0.380	0.616	332	
3	A-3	0.430	0.656	332	
4	A-4	0.430	0.656	332	
5	A-5	0.440	0.663	332	
6	A-6	0.460	0.678	332	
7	A-7	0.470	0.686	332	
8	A-8	0.450	0.671	332	
9	B-1	0.380	0.616	331	
10	B-2	0.370	0.608	331	
11	B-3	0.380	0.616	331	
12	B-4	0.360	0.600	331	
13	B-5	0.360	0.600	331	
14	B-6	0.350	0.592	331	
15	B-7	0.380	0.616	331	
16	B-8	0.320	0.566	331	11:53 AM
Average		0.397	0.629	332	

Moisture Content Data	
Dry Bulb (°F)	332
Wet Bulb (°F)	141.0
TRA	1.12
Vapor Pressure of Water	6.04
ZT	191.00
PM	399.16
Barometric Pressure	29.44
Standard Meter Volume	
Moisture Content	13.57
O_2 %	5.135
CO_2 %	15.453
Standard CFH	6,438,329
K Standard CFH	107.305

Flow Rate Data	
Static Pressure	-0.34
Pitot Coefficient	0.831
Duct Width (in.)	0
Duct Length (in.)	0
Duct Area (ft^2)	0
Stack Diameter (in.)	108
Stack Area (ft^2)	63.6172512
Molecular Weight (dry)	30.678
Molecular Weight (wet)	28.957
Stack Pressure	29.415
Feet per Second	42.865
Actual CFM	163618.22
DSCFM	92744.25

Field Calculations

Raw Data Table

Instrument	ppm or %	Zero	Span	Cylinder Value	Gas Corrected for Calibration	
O_2 (dry)	5.20	0.04	10.80	10.70	**5.14**	dry
CO_2 (wet)	13.39	0.03	8.33	8.30	**13.36**	wet

Moisture	13.57	**Standard CFH**	**6,438,329**
Fuel Factor C	1840	K Standard CFM	107.305
DSCFM	92744		

Results

Start Time	**11:47 AM**
Stop Time	**11:53 AM**
Standard CFH	**6,438,000**
CO_2 %, wet	**13.36**
WAF applied	**0.9950**

MSI / Manitowoc PU
Manitowoc, WI
No. 9 Boiler

7/24/2013
Test 2M Run 6
300 Klbs/Hr

Volumetric Flow Rate Data

Number of Sample Points 16

Point Number		Delta p	Sq. root delta p	Temperature	Time
1	A-1	0.410	0.640	333	11:54 AM
2	A-2	0.380	0.616	333	
3	A-3	0.330	0.574	333	
4	A-4	0.320	0.566	333	
5	A-5	0.320	0.566	333	
6	A-6	0.340	0.583	333	
7	A-7	0.330	0.574	333	
8	A-8	0.340	0.583	333	
9	B-1	0.380	0.616	332	
10	B-2	0.380	0.616	332	
11	B-3	0.400	0.632	332	
12	B-4	0.420	0.648	332	
13	B-5	0.420	0.648	332	
14	B-6	0.470	0.686	332	
15	B-7	0.480	0.693	332	
16	B-8	0.500	0.707	332	12:00 PM
Average		0.389	0.622	333	

Moisture Content Data	
Dry Bulb (°F)	333
Wet Bulb (°F)	141.0
TRA	1.12
Vapor Pressure of Water	6.04
ZT	192.00
PM	398.09
Barometric Pressure	29.44
Standard Meter Volume	
Moisture Content	13.53
O_2 %	5.135
CO_2 %	15.446
Standard CFH	6,360,305
K Standard CFH	106.005

Flow Rate Data	
Static Pressure	-0.34
Pitot Coefficient	0.831
Duct Width (in.)	0.00
Duct Length (in.)	0.00
Duct Area (ft^2)	0.00
Stack Diameter (in.)	108.00
Stack Area (ft^2)	63.62
Molecular Weight (dry)	30.677
Molecular Weight (wet)	28.961
Stack Pressure	29.415
Feet per Second	42.399
Actual CFM	161839.6
DSCFM	91658.91

Field Calculations

Raw Data Table

Instrument	ppm or %	Zero	Span	Cylinder Value	Gas Corrected for Calibration	
O_2 (dry)	5.20	0.04	10.80	10.70	**5.14**	dry
CO_2 (wet)	13.39	0.03	8.33	8.30	**13.36**	wet

Moisture	13.53	**Standard CFH**	**6,360,305**
Fuel Factor C	1840	K Standard CFM	106.005
DSCFM	91659		

Results

Start Time	**11:54 AM**
Stop Time	**12:00 PM**
Standard CFH	**6,360,000**
CO_2 %, wet	**13.36**
WAF applied	**0.9950**

MSI / Manitowoc PU
Manitowoc, WI
No. 9 Boiler
7/24/2013
Run 4-6

Time	$\%O_2$, d	$\% CO_2$, w
11:40	5.259	13.43
11:41	5.279	13.38
11:42	5.202	13.47
11:43	5.194	13.45
11:44	5.188	13.44
11:45	5.145	13.42
11:46	5.204	13.32
11:47	5.206	13.33
11:48	5.255	13.3
11:49	5.199	13.36
11:50	5.191	13.39
11:51	5.223	13.45
11:52	5.188	13.45
11:53	5.136	13.47
11:54	5.146	13.45
11:55	5.203	13.37
11:56	5.213	13.36
11:57	5.187	13.32
11:58	5.176	13.36
11:59	5.256	13.3
12:00	5.235	13.28
Average	**5.204**	**13.386**

MSI / Manitowoc PU
Manitowoc, WI
No. 9 Boiler

7/24/2013
Test 2M Run 7
300 Klbs/Hr

Volumetric Flow Rate Data

Number of Sample Points 16

Point Number		Delta p	Sq. root delta p	Temperature	Time
1	A-1	0.420	0.648	334	12:08 PM
2	A-2	0.390	0.624	334	
3	A-3	0.380	0.616	334	
4	A-4	0.350	0.592	334	
5	A-5	0.340	0.583	334	
6	A-6	0.340	0.583	334	
7	A-7	0.330	0.574	334	
8	A-8	0.340	0.583	334	
9	B-1	0.390	0.624	335	
10	B-2	0.340	0.583	335	
11	B-3	0.350	0.592	335	
12	B-4	0.350	0.592	335	
13	B-5	0.410	0.640	335	
14	B-6	0.440	0.663	335	
15	B-7	0.490	0.700	335	
16	B-8	0.500	0.707	335	12:14 PM
Average		0.385	0.619	335	

Moisture Content Data	
Dry Bulb (°F)	334
Wet Bulb (°F)	140.0
TRA	1.12
Vapor Pressure of Water	5.88
ZT	194.00
PM	380.66
Barometric Pressure	29.44
Standard Meter Volume	
Moisture Content	12.94
O_2 %	5.085
CO_2 %	15.276
Standard CFH	6,318,523
K Standard CFH	105.309

Flow Rate Data	
Static Pressure	-0.35
Pitot Coefficient	0.831
Duct Width (in.)	0.00
Duct Length (in.)	0.00
Duct Area (ft^2)	0.00
Stack Diameter (in.)	108.00
Stack Area (ft^2)	63.62
Molecular Weight (dry)	30.648
Molecular Weight (wet)	29.011
Stack Pressure	29.414
Feet per Second	42.228
Actual CFM	161186.2
DSCFM	91680.53

Field Calculations

Raw Data Table

Instrument	ppm or %	Zero	Span	Cylinder Value	Gas Corrected for Calibration	
O_2 (dry)	5.15	0.04	10.80	10.7	**5.09**	dry
CO_2 (wet)	13.33	0.02	8.33	8.3	**13.30**	wet

Moisture	12.94	**Standard CFH**	**6,318,523**
Fuel Factor C	1840	K Standard CFM	105.309
DSCFM	91681		

Results

Start Time	**12:08 PM**
Stop Time	**12:14 PM**
Standard CFH	**6,319,000**
CO_2 %, wet	**13.30**
WAF applied	**0.9950**

MSI / Manitowoc PU
Manitowoc, WI
No. 9 Boiler

7/24/2013
Test 2M Run 8
300 Klbs/Hr

Volumetric Flow Rate Data

Number of Sample Points 16

Point Number		Delta p	Sq. root delta p	Temperature	Time
1	A-1	0.440	0.663	335	12:15 PM
2	A-2	0.420	0.648	335	
3	A-3	0.370	0.608	335	
4	A-4	0.350	0.592	335	
5	A-5	0.340	0.583	335	
6	A-6	0.380	0.616	335	
7	A-7	0.370	0.608	335	
8	A-8	0.390	0.624	335	
9	B-1	0.360	0.600	336	
10	B-2	0.330	0.574	336	
11	B-3	0.340	0.583	336	
12	B-4	0.340	0.583	336	
13	B-5	0.390	0.624	336	
14	B-6	0.420	0.648	336	
15	B-7	0.490	0.700	336	
16	B-8	0.490	0.700	336	12:21 PM
Average		0.389	0.622	336	

Moisture Content Data		Flow Rate Data	
Dry Bulb (°F)	335		
Wet Bulb (°F)	140.0	Static Pressure	-0.33
TRA	1.12	Pitot Coefficient	0.831
Vapor Pressure of Water	5.88		
ZT	195.00	Duct Width (in.)	0.00
PM	379.57	Duct Length (in.)	0.00
Barometric Pressure	29.44	Duct Area (ft^2)	0.00
		Stack Diameter (in.)	108.00
Standard Meter Volume		Stack Area (ft^2)	63.62
Moisture Content	12.90		
		Molecular Weight (dry)	30.647
O_2 %	5.09	Molecular Weight (wet)	29.015
CO_2 %	15.272	Stack Pressure	29.416
		Feet per Second	42.468
Standard CFH	6,346,681	Actual CFM	162100.21
K Standard CFH	105.778	DSCFM	92128.67

Field Calculations

Raw Data Table

Instrument	ppm or %	Zero	Span	Cylinder Value	Gas Corrected for Calibration	
O_2 (dry)	5.15	0.03	10.79	10.7	**5.09**	dry
CO_2 (wet)	13.33	0.01	8.32	8.3	**13.30**	wet

Moisture	12.90	**Standard CFH**	**6,346,681**
Fuel Factor C	1840	K Standard CFM	105.778
DSCFM	92129		

Results

Start Time	**12:15 PM**
Stop Time	**12:21 PM**
Standard CFH	**6,347,000**
CO_2 %, wet	**13.30**
WAF applied	**0.9950**

MSI / Manitowoc PU
Manitowoc, WI
No. 9 Boiler

7/24/2013
Test 2M Run 9
300 Klbs/Hr

Volumetric Flow Rate Data

Number of Sample Points 16

Point Number		Delta p	Sq. root delta p	Temperature	Time
1	A-1	0.430	0.656	336	12:22 PM
2	A-2	0.390	0.624	336	
3	A-3	0.340	0.583	336	
4	A-4	0.330	0.574	336	
5	A-5	0.370	0.608	336	
6	A-6	0.360	0.600	336	
7	A-7	0.380	0.616	336	
8	A-8	0.380	0.616	336	
9	B-1	0.350	0.592	336	
10	B-2	0.350	0.592	336	
11	B-3	0.360	0.600	336	
12	B-4	0.340	0.583	336	
13	B-5	0.390	0.624	336	
14	B-6	0.410	0.640	336	
15	B-7	0.440	0.663	336	
16	B-8	0.490	0.700	336	12:28 PM
Average		0.382	0.617	336	

Moisture Content Data		Flow Rate Data	
Dry Bulb (°F)	336		
Wet Bulb (°F)	140.0	Static Pressure	-0.35
TRA	1.12	Pitot Coefficient	0.831
Vapor Pressure of Water	5.88		
ZT	196.00	Duct Width (in.)	0.00
PM	378.51	Duct Length (in.)	0.00
Barometric Pressure	29.44	Duct Area (ft^2)	0.00
		Stack Diameter (in.)	108.00
Standard Meter Volume		Stack Area (ft^2)	63.62
Moisture Content	12.87		
		Molecular Weight (dry)	30.646
O_2 %	5.09	Molecular Weight (wet)	29.019
CO_2 %	15.266	Stack Pressure	29.414
		Feet per Second	42.123
Standard CFH	6,290,986	Actual CFM	160786.72
K Standard CFH	104.85	DSCFM	91357.32

Field Calculations

Raw Data Table

Instrument	ppm or %	Zero	Span	Cylinder Value	Gas Corrected for Calibration	
O_2 (dry)	5.15	0.03	10.79	10.7	**5.09**	dry
CO_2 (wet)	13.33	0.01	8.32	8.3	**13.30**	wet

Moisture	12.87	**Standard CFH**	**6,290,986**
Fuel Factor C	1840	K Standard CFM	104.85
DSCFM	91357		

Results

Start Time	**12:22 PM**
Stop Time	**12:28 PM**
Standard CFH	**6,291,000**
CO_2 %, wet	**13.30**
WAF applied	**0.9950**

MSI / Manitowoc PU
Manitowoc, WI
No. 9 Boiler
7/24/2013
Run 7-9

Time	$\%O_2$, d	$\%\ CO_2$, w
12:08	5.131	13.27
12:09	5.126	13.28
12:10	5.195	13.27
12:11	5.237	13.28
12:12	5.204	13.25
12:13	5.136	13.31
12:14	5.153	13.26
12:15	5.202	13.21
12:16	5.22	13.22
12:17	5.164	13.28
12:18	5.128	13.27
12:19	5.106	13.34
12:20	5.095	13.32
12:21	5.118	13.31
12:22	5.152	13.35
12:23	5.108	13.48
12:24	5.084	13.46
12:25	5.147	13.45
12:26	5.055	13.5
12:27	5.047	13.48
12:28	5.093	13.46
12:29	5.146	13.48
12:30	5.188	13.36
12:31	5.147	13.32
12:32	5.179	13.23
12:33	5.183	13.22
12:34	5.205	13.27
12:35	5.216	13.24
Average	**5.149**	**13.328**

MSI / Manitowoc PU
Manitowoc, WI
No. 9 Boiler

7/24/2013
Test 2M Run 10
300 Klbs/Hr

Volumetric Flow Rate Data

Number of Sample Points 16

Point Number		Delta p	Sq. root delta p	Temperature	Time
1	A-1	0.430	0.656	338	12:29 PM
2	A-2	0.390	0.624	338	
3	A-3	0.330	0.574	338	
4	A-4	0.340	0.583	338	
5	A-5	0.350	0.592	338	
6	A-6	0.360	0.600	338	
7	A-7	0.380	0.616	338	
8	A-8	0.380	0.616	338	
9	B-1	0.370	0.608	337	
10	B-2	0.340	0.583	337	
11	B-3	0.330	0.574	337	
12	B-4	0.340	0.583	337	
13	B-5	0.380	0.616	337	
14	B-6	0.430	0.656	337	
15	B-7	0.490	0.700	337	
16	B-8	0.500	0.707	337	12:35 PM
Average		0.384	0.618	338	

Moisture Content Data	
Dry Bulb (°F)	338
Wet Bulb (°F)	140.0
TRA	1.12
Vapor Pressure of Water	5.88
ZT	198.00
PM	376.38
Barometric Pressure	29.44
Standard Meter Volume	
Moisture Content	12.80
O_2 %	5.09
CO_2 %	15.253
Standard CFH	6,294,999
K Standard CFH	104.917

Flow Rate Data	
Static Pressure	-0.37
Pitot Coefficient	0.831
Duct Width (in.)	0.00
Duct Length (in.)	0.00
Duct Area (ft^2)	0.00
Stack Diameter (in.)	108.00
Stack Area (ft^2)	63.62
Molecular Weight (dry)	30.644
Molecular Weight (wet)	29.026
Stack Pressure	29.413
Feet per Second	42.232
Actual CFM	161200.53
DSCFM	91490.95

Field Calculations

Raw Data Table

Instrument	ppm or %	Zero	Span	Cylinder Value	Gas Corrected for Calibration	
O_2 (dry)	5.15	0.03	10.79	10.7	**5.09**	dry
CO_2 (wet)	13.33	0.01	8.32	8.3	**13.30**	wet

Moisture	12.80	**Standard CFH**	6,294,999
Fuel Factor C	1840	K Standard CFM	104.917
DSCFM	91491		

Results

Start Time	**12:29 PM**
Stop Time	**12:35 PM**
Standard CFH	**6,295,000**
CO_2 %, wet	**13.30**
WAF applied	**0.9950**

MSI / Manitowoc PU
Manitowoc, WI
No. 9 Boiler
7/24/2013
Run 10

Time	$\%O_2$, d	$\%\ CO_2$, w
12:08	5.131	13.27
12:09	5.126	13.28
12:10	5.195	13.27
12:11	5.237	13.28
12:12	5.204	13.25
12:13	5.136	13.31
12:14	5.153	13.26
12:15	5.202	13.21
12:16	5.22	13.22
12:17	5.164	13.28
12:18	5.128	13.27
12:19	5.106	13.34
12:20	5.095	13.32
12:21	5.118	13.31
12:22	5.152	13.35
12:23	5.108	13.48
12:24	5.084	13.46
12:25	5.147	13.45
12:26	5.055	13.5
12:27	5.047	13.48
12:28	5.093	13.46
12:29	5.146	13.48
12:30	5.188	13.36
12:31	5.147	13.32
12:32	5.179	13.23
12:33	5.183	13.22
12:34	5.205	13.27
12:35	5.216	13.24
Average	**5.149**	**13.328**

APPENDIX D

MEASUREMENT SYSTEMS PERFORMANCE SPECIFICATIONS

MSI / Manitowoc PU
Manitowoc, WI
No. 9 Boiler
7/23-24/2013
Test 2N

SO_2(TEI Model 43i)

	Cylinder Value (ppm)	Analyzer Response (ppm)	Difference (ppm)	Span Value (ppm)	% of Span
Zero	0.00	0.27	0.27	112.00	0.24
Low Level	49.60	49.37	0.23	112.00	0.21
Mid Level	112.00	114.10	2.10	112.00	1.88
High Level	255.00	259.54	4.54	255.00	1.78

NOx (TEI Model 42i)

	Cylinder Value (ppm)	Analyzer Response (ppm)	Difference (ppm)	Span Value (ppm)	% of Span
Zero	0.00	0.03	0.03	113.00	0.03
Mid Level	50.40	50.06	0.34	113.00	0.30
High Level	113.00	114.00	1.00	113.00	0.88

CO_2 (TEI Model 410i)

	Cylinder Value (ppm)	Analyzer Response (ppm)	Difference (ppm)	Span Value (%)	% of Span
Zero	0.00	0.03	0.03	16.73	0.18
Mid Level	8.30	8.31	0.01	16.73	0.06
High Level	16.73	16.78	0.05	16.73	0.30

O_2 (Servomex Series 1400)

	Cylinder Value (ppm)	Analyzer Response (ppm)	Difference (ppm)	Span Value (%)	% of Span
Zero	0.00	0.11	0.11	21.40	0.51
Mid Level	10.70	10.83	0.13	21.40	0.61
High Level	21.40	21.14	0.26	21.40	1.21

CO (TECO 48i)

	Cylinder Value (ppm)	Analyzer Response (ppm)	Difference (ppm)	Span Value (%)	% of Span
Zero	0.00	0.06	0.06	114.00	0.05
Mid Level	50.80	50.31	0.49	114.00	0.43
High Level	114.00	114.80	0.80	114.00	0.70

**** All Calibrations must be within 2% of the span value...

Calibration Drift

MSI / Manitowoc PU
Manitowoc, WI
No. 9 Boiler
7/23-24/2013
Test 2N

O_2

		Initial	Pre-Cal Bias	Final	Post-cal Bias	Avg.	% Drift of Span
1	Zero	0.11	0.00%	0.15	0.19%	**0.13**	**0.19%**
	Upscale	10.83	0.00%	10.84	0.05%	**10.84**	**0.05%**
2	Zero	0.15	0.19%	0.12	0.05%	**0.14**	**-0.14%**
	Upscale	10.84	0.05%	10.87	0.19%	**10.86**	**0.14%**
3	Zero	0.12	0.05%	0.16	0.23%	**0.14**	**0.19%**
	Upscale	10.87	0.19%	10.75	-0.37%	**10.81**	**-0.56%**
4	Zero	0.16	0.23%	0.15	0.19%	**0.16**	**-0.05%**
	Upscale	10.75	-0.37%	10.78	-0.23%	**10.77**	**0.14%**
5	Zero	0.15	0.19%	0.08	-0.14%	**0.12**	**-0.33%**
	Upscale	10.78	-0.23%	10.85	0.09%	**10.82**	**0.33%**
6	Zero	0.08	-0.14%	0.06	-0.23%	**0.07**	**-0.09%**
	Upscale	10.85	0.09%	10.85	0.09%	**10.85**	**0.00%**
7	Zero	0.06	-0.23%	0.03	-0.37%	**0.05**	**-0.14%**
	Upscale	10.85	0.09%	10.83	0.00%	**10.84**	**-0.09%**
8	Zero	0.03	-0.37%	0.13	0.09%	**0.08**	**0.47%**
	Upscale	10.83	0.00%	10.88	0.23%	**10.86**	**0.23%**
9	Zero	0.13	0.09%	0.06	-0.23%	**0.10**	**-0.33%**
	Upscale	10.88	0.23%	10.81	-0.09%	**10.85**	**-0.33%**
10	Zero	0.06	-0.23%	0.07	-0.19%	**0.07**	**0.05%**
	Upscale	10.81	-0.09%	10.89	0.28%	**10.85**	**0.37%**

	Cylinder Value	Analyzer Value
Zero	0.00 %	0.11 %
Upscale	10.70 %	10.83 %
Span	21.40 %	21.40 %

** All Drift Calibrations must be within 3% of the span value...
** All Bias Calibrations must be within 5% of the span value...

Calibration Drift

MSI / Manitowoc PU
Manitowoc, WI
No. 9 Boiler
7/23-24/2013
Test 2N

CO_2

		Initial	Pre-Cal Bias	Final	Post-Cal Bias	Avg.	% Drift of Span
1	Zero	0.03	0.00%	0.03	0.00%	**0.03**	**0.00%**
	Upscale	8.31	0.00%	8.21	-0.60%	**8.26**	**-0.60%**
2	Zero	0.03	0.00%	0.01	-0.12%	**0.02**	**-0.12%**
	Upscale	8.21	-0.60%	8.33	0.12%	**8.27**	**0.72%**
3	Zero	0.01	-0.12%	0.03	0.00%	**0.02**	**0.12%**
	Upscale	8.33	0.12%	8.24	-0.42%	**8.29**	**-0.54%**
4	Zero	0.03	0.00%	0.04	0.06%	**0.04**	**0.06%**
	Upscale	8.24	-0.42%	8.21	-0.60%	**8.23**	**-0.18%**
5	Zero	0.04	0.06%	0.01	-0.12%	**0.03**	**-0.18%**
	Upscale	8.21	-0.60%	8.24	-0.42%	**8.23**	**0.18%**
6	Zero	0.01	-0.12%	0.05	0.12%	**0.03**	**0.24%**
	Upscale	8.24	-0.42%	8.22	-0.54%	**8.23**	**-0.12%**
7	Zero	0.05	0.12%	0.03	0.00%	**0.04**	**-0.12%**
	Upscale	8.22	-0.54%	8.24	-0.42%	**8.23**	**0.12%**
8	Zero	0.03	0.00%	0.07	0.24%	**0.05**	**0.24%**
	Upscale	8.24	-0.42%	8.35	0.24%	**8.30**	**0.66%**
9	Zero	0.07	0.24%	0.01	-0.12%	**0.04**	**-0.36%**
	Upscale	8.35	0.24%	8.32	0.06%	**8.34**	**-0.18%**
10	Zero	0.01	-0.12%	0.04	0.06%	**0.03**	**0.18%**
	Upscale	8.32	0.06%	8.32	0.06%	**8.32**	**0.00%**

	Cylinder Value	Analyzer Response
Zero	0.00 ppm	0.03 ppm
Upscale	8.30 ppm	8.31 ppm
Span	16.73 ppm	16.73 ppm

** All Drift Calibrations must be within 3% of the span value...
** All Bias Calibrations must be within 5% of the span value...

Calibration Drift

MSI / Manitowoc PU
Manitowoc, WI
No. 9 Boiler
7/23-24/2013
Test 2N

Nox

		Initial	Pre-Cal Bias	Final	Post-Cal Bias	Avg.	% Drift of Span
1	Zero	0.03	0.00%	0.13	0.09%	**0.08**	**0.09%**
	Upscale	50.06	0.00%	49.60	-0.41%	**49.83**	**-0.41%**
2	Zero	0.13	0.09%	0.12	0.08%	**0.13**	**-0.01%**
	Upscale	49.60	-0.41%	49.57	-0.43%	**49.59**	**-0.03%**
3	Zero	0.12	0.08%	0.03	0.00%	**0.08**	**-0.08%**
	Upscale	49.57	-0.43%	49.57	-0.43%	**49.57**	**0.00%**
4	Zero	0.03	0.00%	0.09	0.05%	**0.06**	**0.05%**
	Upscale	49.57	-0.43%	50.34	0.25%	**49.96**	**0.68%**
5	Zero	0.09	0.05%	0.06	0.03%	**0.08**	**-0.03%**
	Upscale	50.34	0.25%	50.01	-0.04%	**50.18**	**-0.29%**
6	Zero	0.06	0.03%	0.07	0.04%	**0.07**	**0.01%**
	Upscale	50.01	-0.04%	50.03	-0.03%	**50.02**	**0.02%**
7	Zero	0.07	0.04%	0.11	0.07%	**0.09**	**0.04%**
	Upscale	50.03	-0.03%	50.14	0.07%	**50.09**	**0.10%**
8	Zero	0.11	0.07%	0.04	0.01%	**0.08**	**-0.06%**
	Upscale	50.14	0.07%	50.06	0.00%	**50.10**	**-0.07%**
9	Zero	0.04	0.01%	0.14	0.10%	**0.09**	**0.09%**
	Upscale	50.06	0.00%	50.21	0.13%	**50.14**	**0.13%**
10	Zero	0.14	0.10%	0.13	0.09%	**0.14**	**-0.01%**
	Upscale	50.21	0.13%	50.05	-0.01%	**50.13**	**-0.14%**

	Cylinder Value	Analyzer Response
Zero	0.00 ppm	0.03 ppm
Upscale	50.40 ppm	50.06 ppm
Span	113.00 ppm	113.00 ppm

** All Drift Calibrations must be within 3% of the span value...
** All Bias Calibrations must be within 5% of the span value...

Calibration Drift

MSI / Manitowoc PU
Manitowoc, WI
No. 9 Boiler
7/23-24/2013
Test 2N

SO_2

		Initial	Pre-Cal Bias	Final	Post-Cal Bias	Avg.	% Drift of Span
1	Zero	0.27	0.00%	0.11	-0.14%	**0.19**	**-0.14%**
	Upscale	49.37	0.00%	50.23	0.77%	**49.80**	**0.77%**
2	Zero	0.11	-0.14%	0.05	-0.20%	**0.08**	**-0.05%**
	Upscale	50.23	0.77%	50.02	0.58%	**50.13**	**-0.19%**
3	Zero	0.05	-0.20%	0.06	-0.19%	**0.06**	**0.01%**
	Upscale	50.02	0.58%	50.55	1.05%	**50.29**	**0.47%**
4	Zero	0.06	-0.19%	0.13	-0.13%	**0.10**	**0.06%**
	Upscale	50.55	1.05%	49.99	0.55%	**50.27**	**-0.50%**
5	Zero	0.13	-0.13%	0.09	-0.16%	**0.11**	**-0.04%**
	Upscale	49.99	0.55%	50.25	0.79%	**50.12**	**0.23%**
6	Zero	0.09	-0.16%	0.11	-0.14%	**0.10**	**0.02%**
	Upscale	50.25	0.79%	50.84	1.31%	**50.55**	**0.53%**
7	Zero	0.11	-0.14%	0.13	-0.13%	**0.12**	**0.02%**
	Upscale	50.84	1.31%	49.97	0.54%	**50.41**	**-0.78%**
8	Zero	0.13	-0.13%	0.09	-0.16%	**0.11**	**-0.04%**
	Upscale	49.97	0.54%	49.93	0.50%	**49.95**	**-0.04%**
9	Zero	0.09	-0.16%	0.08	-0.17%	**0.09**	**-0.01%**
	Upscale	49.93	0.50%	50.25	0.79%	**50.09**	**0.29%**
10	Zero	0.08	-0.17%	0.11	-0.14%	**0.10**	**0.03%**
	Upscale	50.25	0.79%	50.05	0.61%	**50.15**	**-0.18%**

	Cylinder Value	Analyzer Response
Zero	0.00 ppm	0.27 ppm
Upscale	49.60 ppm	49.37 ppm
Span	112.00 ppm	112.00 ppm

** All Drift Calibrations must be within 3% of the span value...
** All Bias Calibrations must be within 5% of the span value...

Calibration Drift

MSI / Manitowoc PU
Manitowoc, WI
No. 9 Boiler
7/23-24/2013
Test 2N

CO

		Initial	Pre-Cal Bias	Final	Post-Cal Bias	Avg.	% Drift of Span
1	Zero	0.06	0.00%	0.06	0.00%	**0.06**	**0.00%**
	Upscale	50.31	0.00%	50.59	0.25%	**50.45**	**0.25%**
2	Zero	0.06	0.00%	0.09	0.03%	**0.08**	**0.03%**
	Upscale	50.59	0.25%	50.71	0.35%	**50.65**	**0.11%**
3	Zero	0.09	0.03%	0.15	0.08%	**0.12**	**0.05%**
	Upscale	50.71	0.35%	50.25	-0.05%	**50.48**	**-0.40%**
4	Zero	0.15	0.08%	0.05	-0.01%	**0.10**	**-0.09%**
	Upscale	50.25	-0.05%	50.59	0.25%	**50.42**	**0.30%**
5	Zero	0.05	-0.01%	0.14	0.07%	**0.10**	**0.08%**
	Upscale	50.59	0.25%	50.49	0.16%	**50.54**	**-0.09%**
6	Zero	0.14	0.07%	0.14	0.07%	**0.14**	**0.00%**
	Upscale	50.49	0.16%	50.56	0.22%	**50.53**	**0.06%**
7	Zero	0.14	0.07%	0.06	0.00%	**0.10**	**-0.07%**
	Upscale	50.56	0.22%	50.42	0.10%	**50.49**	**-0.12%**
8	Zero	0.06	0.00%	0.06	0.00%	**0.06**	**0.00%**
	Upscale	50.42	0.10%	50.39	0.07%	**50.41**	**-0.03%**
9	Zero	0.06	0.00%	0.14	0.07%	**0.10**	**0.07%**
	Upscale	50.39	0.07%	50.18	-0.11%	**50.29**	**-0.18%**
10	Zero	0.14	0.07%	0.12	0.05%	**0.13**	**-0.02%**
	Upscale	50.18	-0.11%	50.19	-0.11%	**50.19**	**0.01%**

	Cylinder Value	Analyzer Response
Zero	0.00 ppm	0.06 ppm
Upscale	50.80 ppm	50.31 ppm
Span	114.00 ppm	114.00 ppm

** All Drift Calibrations must be within 3% of the span value...
** All Bias Calibrations must be within 5% of the span value...

Interpoll Laboratories
(763) 786-6020

Stationary Gas Turbine Nox Determination
Method 20 NO_2 to NO Converter Efficiency Datasheet

Job	MSI / Manitowoc PU
Source	No. 9 Boiler
Date	7/23-24/2013
Operator	AW / NB
Analyzer	TECO Model 42i (NOx)
Analyzer S/N	510511561

Time (min)	NOx Response
8:45 PM	65.88
8:46 PM	65.94
8:47 PM	65.62
8:48 PM	65.83
8:49 PM	65.61
8:50 PM	65.61
8:51 PM	65.10
8:52 PM	65.60
8:53 PM	65.55
8:54 PM	65.12
8:55 PM	65.03
8:56 PM	65.69
8:57 PM	65.52
8:58 PM	65.48
8:59 PM	65.50
9:00 PM	65.73
9:01 PM	65.07
9:02 PM	65.94
9:03 PM	65.14
9:04 PM	65.23
9:05 PM	65.05
9:06 PM	65.68
9:07 PM	65.45
9:08 PM	65.20
9:09 PM	65.57
9:10 PM	65.82
9:11 PM	65.50
9:12 PM	65.30
9:13 PM	65.61
9:14 PM	65.50
Highest Peak Value	65.94
Percent Drift	0.7%
System Pass of Fail	**PASS**

Instructions: Add mid-level gas to a leak-free Tedlar bag. Dilute the gas with 20.9% Oxygen to approximately 1:1. Then immediately attach the bag to the instrument and record the Nox Reponses for 30 minutes. The system is OK if the response at the end is less than 2.0 % of the highest response.

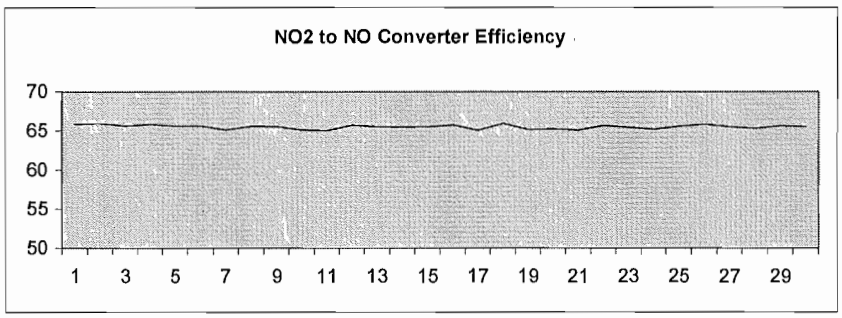

INTERPOLL LABORATORIES, INC.
(763) 786-6020

EPA Appendix A Stratification Test

Job:	MSI / Manitowoc PU	**Date:**	7/23-24/2013
Source:	No. 9 Boiler	**Personnel:**	AW / NB
Test	2N	**Bar. Press. (in. Hg)**	29.29
PDT Number	85 / 138		
Measurement Response Time:		98	seconds

Stack Diameter 108.00 **in.** **Port Length in.** 11.50

Traverse Point	Fraction of Diameter	Distance From Stack Wall (in.)	Distance From End of Port (in.)	Time (min)	SO2 ppm (wet)	Nox ppm (wet)	O2 % (dry)	CO_2 % (wet)
1	0.17	18.00	**29.50**	21:10	52.70	59.13	9.15	10.11
2	0.50	54.00	**65.50**	21:17	58.85	55.82	9.35	9.92
3	0.83	90.00	**101.50**	21:24	55.37	55.36	9.28	9.93
Average					**55.64**	**56.77**	**9.26**	**9.99**
			Largest Value		58.85	59.13	9.35	10.11
			Smallest Value		52.70	55.36	9.15	9.92
			%Deviation		**11.67%**	**6.80%**	**2.18%**	**1.96%**

* A three point traverse was used for each test run.

MSI / Manitowoc PU
Manitowoc, WI
No. 9 Boiler
7/23-24/2013
Stratification Test Data

Time	SO_2 ppm, w	Nox ppm, w	$\%O_2$, d	% CO_2, w
21:10:00	44.70	61.82	9.13	10.16
21:11:00	46.25	61.88	9.18	10.09
21:12:00	50.44	60.40	9.11	10.16
21:13:00	54.31	59.33	9.11	10.08
21:14:00	55.60	56.86	9.13	10.14
21:15:00	58.62	57.58	9.16	10.12
21:16:00	58.97	56.03	9.21	10.02
Average	**52.70**	**59.13**	**9.15**	**10.11**

Time	SO_2 ppm, w	Nox ppm, w	$\%O_2$, d	% CO_2, w
21:17:00	58.58	57.94	9.33	9.94
21:18:00	58.37	56.16	9.44	9.92
21:19:00	58.12	55.16	9.38	9.92
21:20:00	59.87	54.84	9.34	9.96
21:21:00	62.02	54.51	9.29	9.92
21:22:00	60.22	55.08	9.27	9.95
21:23:00	54.77	57.03	9.38	9.81
Average	**58.85**	**55.82**	**9.35**	**9.92**

Time	SO_2 ppm, w	Nox ppm, w	$\%O_2$, d	% CO_2, w
21:24:00	46.90	54.65	9.45	9.83
21:25:00	46.24	55.86	9.37	9.88
21:26:00	37.62	60.44	9.25	10.01
21:27:00	45.95	56.41	9.19	9.98
21:28:00	63.28	53.59	9.24	9.95
21:29:00	69.54	53.43	9.26	9.91
21:30:00	78.09	53.16	9.23	9.96
Average	**55.37**	**55.36**	**9.28**	**9.93**

MPU03531

MSI / Manitowoc PU
Manitowoc, WI
No. 9 Boiler
7/24/2013
Test 2M

CO_2 (TEI Model 410i)

	Cylinder Value (ppm)	Analyzer Response (ppm)	Difference (ppm)	Span Value (ppm)	% of Span
Zero	0.00	0.11	0.11	16.73	0.66
Mid Level	8.30	8.39	0.09	16.73	0.54
High Level	16.73	16.45	0.28	16.73	1.67

O_2 (Servomex Series 1400)

	Cylinder Value (ppm)	Analyzer Response (ppm)	Difference (ppm)	Span Value (ppm)	% of Span
Zero	0.00	0.07	0.07	21.40	0.33
Mid Level	10.70	10.82	0.12	21.40	0.56
High Level	21.40	21.24	0.16	21.40	0.75

**** All Calibrations must be within 2% of the span value...

Calibration Drift

MSI / Manitowoc PU
Manitowoc, WI
No. 9 Boiler
7/24/2013
Test 2M

O_2

		Initial	Pre-Cal Bias	Final	Post-cal Bias	Avg.	% Drift of Span
1	Zero	0.07	0.00%	0.04	-0.14%	**0.06**	**-0.14%**
	Upscale	10.82	0.00%	10.82	0.00%	**10.82**	**0.00%**
2	Zero	0.04	-0.14%	0.04	-0.14%	**0.04**	**0.00%**
	Upscale	10.82	0.00%	10.82	0.00%	**10.82**	**0.00%**
3	Zero	0.04	-0.14%	0.04	-0.14%	**0.04**	**0.00%**
	Upscale	10.82	0.00%	10.82	0.00%	**10.82**	**0.00%**
4	Zero	0.04	-0.14%	0.04	-0.14%	**0.04**	**0.00%**
	Upscale	10.82	0.00%	10.80	-0.09%	**10.81**	**-0.09%**
5	Zero	0.04	-0.14%	0.04	-0.14%	**0.04**	**0.00%**
	Upscale	10.80	-0.09%	10.80	-0.09%	**10.80**	**0.00%**
6	Zero	0.04	-0.14%	0.04	-0.14%	**0.04**	**0.00%**
	Upscale	10.80	-0.09%	10.80	-0.09%	**10.80**	**0.00%**
7	Zero	0.04	-0.14%	0.03	-0.19%	**0.04**	**-0.05%**
	Upscale	10.80	-0.09%	10.79	-0.14%	**10.80**	**-0.05%**
8	Zero	0.03	-0.19%	0.03	-0.19%	**0.03**	**0.00%**
	Upscale	10.79	-0.14%	10.79	-0.14%	**10.79**	**0.00%**
9	Zero	0.03	-0.19%	0.03	-0.19%	**0.03**	**0.00%**
	Upscale	10.79	-0.14%	10.79	-0.14%	**10.79**	**0.00%**
10	Zero	0.03	-0.19%	0.03	-0.19%	**0.03**	**0.00%**
	Upscale	10.79	-0.14%	10.79	-0.14%	**10.79**	**0.00%**

	Cylinder Value	Analyzer Value
Zero	0.00 %	0.07 %
Upscale	10.70 %	10.82 %
Span	21.40 %	21.4 %

** All Drift Calibrations must be within 3% of the span value...
** All Bias Calibrations must be within 5% of the span value...

Calibration Drift

MSI / Manitowoc PU
Manitowoc, WI
No. 9 Boiler
7/24/2013
Test 2M

CO_2

		Initial	Pre-Cal Bias	Final	Post-Cal Bias	Avg.	% Drift of Span
1	Zero	0.11	0.00%	0.08	-0.18%	**0.10**	**-0.18%**
	Upscale	8.39	0.00%	8.44	0.30%	**8.42**	**0.30%**
2	Zero	0.08	-0.18%	0.08	-0.18%	**0.08**	**0.00%**
	Upscale	8.44	0.30%	8.44	0.30%	**8.44**	**0.00%**
3	Zero	0.08	-0.18%	0.08	-0.18%	**0.08**	**0.00%**
	Upscale	8.44	0.30%	8.44	0.30%	**8.44**	**0.00%**
4	Zero	0.08	-0.18%	0.03	-0.48%	**0.06**	**-0.30%**
	Upscale	8.44	0.30%	8.33	-0.36%	**8.39**	**-0.66%**
5	Zero	0.03	-0.48%	0.03	-0.48%	**0.03**	**0.00%**
	Upscale	8.33	-0.36%	8.33	-0.36%	**8.33**	**0.00%**
6	Zero	0.03	-0.48%	0.03	-0.48%	**0.03**	**0.00%**
	Upscale	8.33	-0.36%	8.33	-0.36%	**8.33**	**0.00%**
7	Zero	0.03	-0.48%	0.01	-0.60%	**0.02**	**-0.12%**
	Upscale	8.33	-0.36%	8.32	-0.42%	**8.33**	**-0.06%**
8	Zero	0.01	-0.60%	0.01	-0.60%	**0.01**	**0.00%**
	Upscale	8.32	-0.42%	8.32	-0.42%	**8.32**	**0.00%**
9	Zero	0.01	-0.60%	0.01	-0.60%	**0.01**	**0.00%**
	Upscale	8.32	-0.42%	8.32	-0.42%	**8.32**	**0.00%**
10	Zero	0.01	-0.60%	0.01	-0.60%	**0.01**	**0.00%**
	Upscale	8.32	-0.42%	8.32	-0.42%	**8.32**	**0.00%**

	Cylinder Value	Analyzer Response
Zero	0.00 ppm	0.11 ppm
Upscale	8.30 ppm	8.39 ppm
Span	16.73 ppm	16.73 ppm

** All Drift Calibrations must be within 3% of the span value...
** All Bias Calibrations must be within 5% of the span value...

APPENDIX E

CALIBRATION GAS CERTIFICATION SHEETS

THE LINDE GROUP

CERTIFICATE OF ANALYSIS

EPA PROTOCOL MIXTURE

PROCEDURE # : G1

PGVP ID#:	I12012	**GAS CODE:**	OC2
CUSTOMER:	HAMMOND	**CYLINDER # :**	CC-131002
SALES#:	501172279	**CYLINDER PRES:**	2000 PSIG
PROD#:	1240925	**CYLINDER VALVE:**	CGA 590
P.O.# :	4501172279	**CYLINDER SIZE:**	2A
MATERIAL#:	24090596	**CYLINDER MATERIAL:**	Aluminum
CERTIFICATION DATE:	18-Dec-2012	**GAS VOLUME:**	4000 Liter
EXPIRATION DATE:	19-Dec-2020	**BLEND TOLERANCE:**	5% Relative
(Using the May 2012 Revision of the EPA Protocol)		**PAGE:**	1 of 1

CERTIFICATION HISTORY

COMPONENT	DATE OF ASSAY	MEAN CONCENTRATION	CERTIFIED CONCENTRATION	ANALYTICAL ACCURACY
Carbon Dioxide	18-Dec-2012	16.73 %	16.73 %	+/- 1%
Oxygen	18-Dec-2012	21.4 %	21.4 %	+/- 1%

BALANCE Nitrogen

PREVIOUS CERTIFICATION DATES: None

REFERENCE STANDARDS

COMPONENT	SRM/NTRM#	CYLINDER#	CONCENTRATION
Carbon Dioxide	NTRM-82745x	SG-9609736	19.98 %
Oxygen	NTRM-82659Y	cc-237244	24.52 %

INSTRUMENTATION

COMPONENT	MAKE/MODEL	SERIAL #	DETECTOR	CALIBRATION DATE(S)
Carbon Dioxide	CAI-300	S03001	NDIR	14-Dec-2012
Oxygen	CAI-300	S03001	PM	21-Nov-2012

THIS STANDARD IS NIST TRACEABLE. IT WAS CERTIFIED ACCORDING TO THE 1997 EPA PROTOCOL PROCEDURES. DO NOT USE THIS STANDARD IF THE CYLINDER PRESSURE IS LESS THAN 100 PSIG.

ANALYST: _____ Linde Gas North America LLC **DATE:** 18-Dec-2012

MATTHEW JACKSON

(908) 329-9700 Main (908) 329-9740 Fax
www.Lindeus.com

MPU03536

LIQUID TECHNOLOGY CORPORATION

"INDUSTRY LEADER IN SPECIALTY GASES"

Certificate of Analysis

- EPA PROTOCOL GAS -

Customer	Minneapolis Oxygen (Minneapolis, MN)
Date	June 18, 2013
Delivery Receipt	DR-47332
Gas Standard	8.50% CO2, 11.0% Oxygen/Nitrogen - EPA PROTOCOL
Part Number:	SPC NAE 03075
Final Analysis Date	June 17, 2013
Expiration Date	June 17, 2021

DO NOT USE BELOW 100 psig

Cylinder Data

Cylinder Serial Number:	EB-0019925	Cylinder Outlet:	CGA 590
Cylinder Volume:	136 Cubic Feet	Cylinder Pressure:	1950 psig, 70°F
Expiration Date:	June 17, 2021		

Analytical Data

EPA Protocol, Section No. 2.2, Procedure G-1

Replicate Concentrations

Carbon Dioxide: 8.30% +/- 0.07%

Oxygen: 10.7% +/- 0.08%

Nitrogen: Balance

Reference Standard(s):

GMIS/SRM:	GMIS/GMIS	GMIS
Cylinder Number:	EB-0026839/CC-185129	CC-231332
Concentration:	6.847% CO2/13.92% CO2	9.97% Oxygen
Expiration Date:	10/13/20 - 06/24/14	04/06/14

Certification Instrumentation

Component:	Carbon Dioxide	Oxygen
Make/Model:	Nicolet 6700	Servomex 244a
Serial Number:	APW1200289	1847
Principal of Measurement:	FTIR	Paramagnetic
Last Calibration:	May 23, 2013	May 31, 2013

Analytical uncertainty and NIST Traceability are in compliance with EPA-600/R-12/531.

Certified by: *David Scott*

PGVP Vendor ID: E12013

"UNMATCHED EXCELLENCE"
2048 APEX COURT APOPKA, FLORIDA 32703 ~ PHONE (407)-292-2990 FAX (407)-292-3313
WWW.LIQUIDTECHCORP.COM
APOPKA, FL • HOUSTON, TX

MPU03537

LIQUID TECHNOLOGY CORPORATION

"INDUSTRY LEADER IN SPECIALTY GASES"

Certificate of Analysis

- EPA PROTOCOL GAS -

Customer	Minneapolis Oxygen (Minneapolis, MN)
Date	May 13, 2013
Delivery Receipt	DR-46947
Gas Standard	112.5 ppm CO, 112.5 ppm NO, 112.5 ppm SO2/Nitrogen - EPA PROTOCOL
Final Analysis Date	May 13, 2013
Expiration Date	May 13, 2021
Part Number	SPC NAE04050

DO NOT USE BELOW 100 psig

Analytical Data:
EPA Protocol, Section No. 2.2, Procedure G-1.

Reported Concentrations
Carbon Monoxide: 114 ppm +/- 0.64 ppm
Nitric Oxide: 113 ppm +/- 0.40 ppm
Sulfur Dioxide: 112 ppm +/- 0.86 ppm
Nitrogen: Balance
Total NOx: 113 ppm
**** NOx for Reference Use Only ****

Reference Standards

SRM/GMIS:	GMIS	GMIS/GMIS	GMIS/GMIS
Cylinder Number:	EB-0015851	ND-45693/ND-45515	EB-0014653/CC-251490
Concentration:	104.90 ppm CO	97.434 ppm/245.26 ppm NO	103.89 ppm SO2/507.877 ppm SO2
Expiration Date:	10/21/13	08/23/15 - 10/22/14	12/01/14 - 04/12/15

Certification Instrumentation

Component:	Carbon Monoxide	Nitric Oxide	Sulfur Dioxide
Make/Model:	NEXUS 6700	NEXUS 6700	NEXUS 6700
Serial Number:	APW1200289	APW1200289	APW1200289
Principal of Measurement:	FTIR	FTIR	FTIR
Last Calibration:	April 24, 2013	April 24, 2013	April 24, 2013

Cylinder Data

Cylinder Number:	EB-0040597	Cylinder Volume:	136 Cubic Feet
Cylinder Outlet:	CGA 660	Cylinder Pressure:	1950 psig, 70°F
Expiration Date:	May 13, 2021		

Analytical Uncertainty and NIST Traceability are in compliance with EPA-600/R-12/531.

Certified by: David Scott

PGVP Vendor ID: E12013

"UNMATCHED EXCELLENCE"
2048 APEX COURT APOPKA, FLORIDA 32703 ~ PHONE (407)-292-2990 FAX (407)-292-3313
WWW.LIQUIDTECHCORP.COM
APOPKA, FL • HOUSTON, TX

MPU03538

LIQUID TECHNOLOGY CORPORATION

"INDUSTRY LEADER IN SPECIALTY GASES"

Certificate of Analysis

- EPA PROTOCOL GAS -

Customer	Minneapolis Oxygen (Minneapolis, MN)
Date	February 19, 2013
Delivery Receipt	DR-45794
Gas Standard	50.0 ppm CO, 50.0 ppm NO, 50.0 ppm SO2/Nitrogen - EPA PROTOCOL
Final Analysis Date	February 11, 2013
Expiration Date	February 11, 2021

DO NOT USE BELOW 150 psig

Analytical Data:
EPA Protocol, Section No. 2.2, Procedure G-1.

Reported Concentrations

Carbon Monoxide: 50.8 ppm +/- 0.29 ppm
Nitric Oxide: 50.4 ppm +/- 0.27 ppm
Sulfur Dioxide: 49.6 ppm +/- 0.49 ppm
Nitrogen: Balance
Total NOx: 50.5 ppm
**** NOx for Reference Use Only ****

Reference Standards

SRM/GMIS:	GMIS	GMIS	GMIS
Cylinder Number:	CC-128982	CC-88803	EB-0014698
Concentration:	50.89 ppm CO	49.52 ppm NO	50.67 ppm SO2
Expiration Date:	10/20/14	07/18/13	09/20/14

Certification Instrumentation

Component:	Carbon Monoxide	Nitric Oxide	Sulfur Dioxide
Make/Model:	NEXUS 6700	NEXUS 6700	NEXUS 6700
Serial Number:	AEP99000154	AEP99000154	AEP99000154
Principal of Measurement:	FTIR	FTIR	FTIR
Last Calibration:	January 30, 2013	January 30, 2013	January 30, 2013

Cylinder Data

Cylinder Number:	CC-115901	Cylinder Volume:	133 Cubic Feet
Cylinder Outlet:	CGA 660	Cylinder Pressure:	1900 psig, 70°F
Expiration Date:	February 11, 2021		

Analytical Uncertainty and NIST Traceability are in compliance with EPA-600/R-12/531.

Certified by: David Scott

PGVP Vendor ID: E12013

"UNMATCHED EXCELLENCE"

2048 APEX COURT APOPKA, FLORIDA 32703 ~ PHONE (407)-292-2990 FAX (407)-292-3313
WWW.LIQUIDTECHCORP.COM

MPU03539

LIQUID TECHNOLOGY CORPORATION

"INDUSTRY LEADER IN SPECIALTY GASES"

Certificate of Analysis

- EPA PROTOCOL GAS -

Customer	Minneapolis Oxygen (Minneapolis, MN)
Date	April 29, 2013
Delivery Receipt	DR-46677
Gas Standard	250 ppm CO, 250 ppm NO, 250 ppm SO2/Nitrogen - EPA PROTOCOL
Final Analysis Date	April 01, 2013
Expiration Date	April 01, 2021

DO NOT USE BELOW 100 psig

Analytical Data:
EPA Protocol, Section No. 2.2, Procedure G-1.

Reported Concentrations
Carbon Monoxide: 254 ppm +/- 1.0 ppm
Nitric Oxide: 249 ppm +/- 0.41 ppm
Sulfur Dioxide: 255 ppm +/- 1.0 ppm
Nitrogen: Balance
Total NOx: 249 ppm
**** NOx for Reference Use Only ****

Reference Standards

SRM/GMIS:	GMIS	GMIS/GMIS	GMIS/GMIS
Cylinder Number:	CC-185111	ND-45693/ND-45515	EB-0014653/CC-251490
Concentration:	257.469 ppm CO	97.434 ppm/245.26 ppm NO	103.89 ppm SO2/507.877 ppm SO2
Expiration Date:	10/22/14	08/23/15 - 10/22/14	12/01/14 - 04/12/15

Certification Instrumentation

Component:	Carbon Monoxide	Nitric Oxide	Sulfur Dioxide
Make/Model:	NEXUS 6700	NEXUS 6700	NEXUS 6700
Serial Number:	APW1200289	APW1200289	APW1200289
Principal of Measurement:	FTIR	FTIR	FTIR
Last Calibration:	March 28, 2013	March 28, 2013	March 28, 2013

Cylinder Data

Cylinder Number:	EB-0033979	Cylinder Volume:	135 Cubic Feet
Cylinder Outlet:	CGA 660	Cylinder Pressure:	1925 psig, 70°F
Expiration Date:	April 01, 2021		

Analytical Uncertainty and NIST Traceability are in compliance with EPA-600/R-12/531.

Certified by: David Scott

PGVP Vendor ID: E1

"UNMATCHED EXCELLENCE"
2048 APEX COURT APOPKA, FLORIDA 32703 ~ PHONE (407)-292-2990 FAX (407)-292-3313
WWW.LIQUIDTECHCORP.COM
APOPKA, FL • HOUSTON, TX

MPU03540

APPENDIX F

GAS ANALYZER SPECIFICATIONS

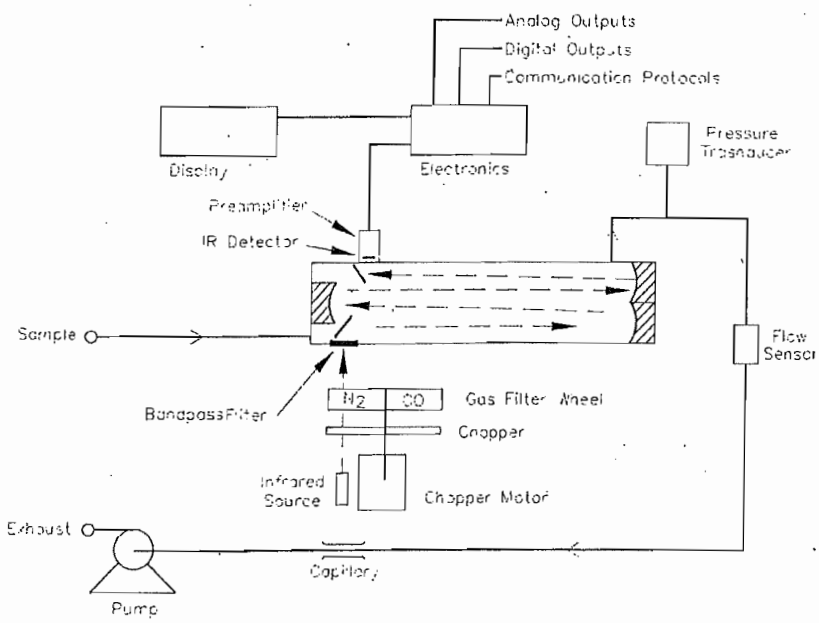

Figure 1-1. Model 48*i* Flow Schematic

Specifications

Table 1-1. Model 48*i* Specifications

Preset ranges	0-1, 2, 5, 10, 20, 50, 100, 200, 500, 1000, 2000, 5000, 10000 (ppm or mg/m^3)
Custom ranges	0-1 to 10000 (ppm or mg/m^3)
Zero roise	0.02 ppm RMS (30 second averaging time)
Lower detectable limit	0.04 ppm
Zero drift (24 hour)	< 0.1 ppm
Span drift	± 1% full-scale
Response time	60 seconds (30 second averaging time)
Linearity	± 1% of full-scale ≤ 1000 ppm ± 2.5% of full-scale > 1000 ppm
Sample flow rate	1.0 LPM
Operating temperature	20–30 °C (may be safely operated over the range of 0–45 °C)*

MPU03542

Power requirements	100 VAC @ 50/60 Hz 115 VAC @ 50/60 Hz* 220–240 VAC @ 50/60 Hz 275 watts
Physical dimensions	16.75" (W) X 8.62" (H) X 23" (D)
Weight	Approximately 49 lbs.
Analog outputs	6 voltage outputs; 0–100 mV, 1, 5, 10 V (User selectable), 5% of full-scale over/under range, 12 bit resolution, user selectable for measurement input
Digital outputs	1 power fail relay Form C, 10 digital relays Form A, user selectable alarm output, relay logic, 100 mA @ 200 VDC
Digital inputs	16 digital inputs, user select programmable, TTL level, pulled high
Serial Ports	1 RS-232 or RS-485 with two connectors, baud rate 1200–115200, data bits, parity, and stop bits, protocols: C-Link, MODBUS, and streaming data (all user selectable)
Ethernet connection	RJ45 connector for 10Mbs Ethernet connection, static or dynamic TCP/IP addressing

*In non condensing environments. Performance specifications based on operation with 20–30 °C range.

MPU03543

MODEL 1420 SERVOMEX PARAMAGNETIC O_2 ANALYZER SPECIFICATIONS

Repeatability:	Better than ± 0.2% O2 under constant conditions
Drift	Less than 0.2% O2 per week under constant conditions. (Excluding variation due to barometric pressure changes; reading is proportional to barometric pressure
Outputs	
Display	3 ½ digit LCD reading 0.0 to 100.0% oxygen with over range capability
Output	0 to 1V (non-isolated) for 0 to 100% oxygen available on 'D' type connector located on the back panel of the instrument. Output impedance is less than 10 ohms.
Option	4 – 20mA isolated, Max impedance 500 ohms
Flow alarm output	Change over relay contact rated at 3A/115V ac, 1A/240V ac or 1A/28V dc. 4 sets of single pole changeover contacts. Alarm becomes active when sample gas flow through the analyzer fails
Sample Requirements	
Condition	Clean, dry gas with dew point 5 deg C below ambient temperature
Inlet pressure	0.5 to 3 psig (3.5 to 21kPa). Inlet pressure changes within this range will change the reading by less than 0.1% O2. May be operated up to 10 psig (70kPa) with degraded stability
Flow rate	1.5 to 6 litres/minute approximately depending on sample pressure
Filtering	0.6 micron replaceable filter integral to the automatic flow control device.
Response time	Less than 15 secs. To 90% at an inlet pressure of 3 psig (21kPa)
Inlet/vent connections	¼ inch OD tube (stainless steel) suitable for 6mm ID flexible tubing or ¼ inch OD compression fittings.

Materials exposed to the sample	Stainless steel, Pyrex glass, brass, platinum, epoxy resin, viton, polypropylene and glass fibre filter
Physical Characteristics	
Case	Steel and aluminum finished in epoxy powder paint
Case Classification	IP 20 (IEC 529) when fitted into the Servomex 1400 series 19 inch case
Weight	10Kg (22 lb) approximately
Electrical	
AC Supply	110 to 120V AC or 220 to 240V AC, ±10%, 48 to 62Hz. Voltage selected by a voltage selector integral to the IEC supply plug
Power required	15VA maximum

NO_2, and NO_x concentrations to the front panel display, the analog outputs, and also makes the data available over the serial or ethernet connection.

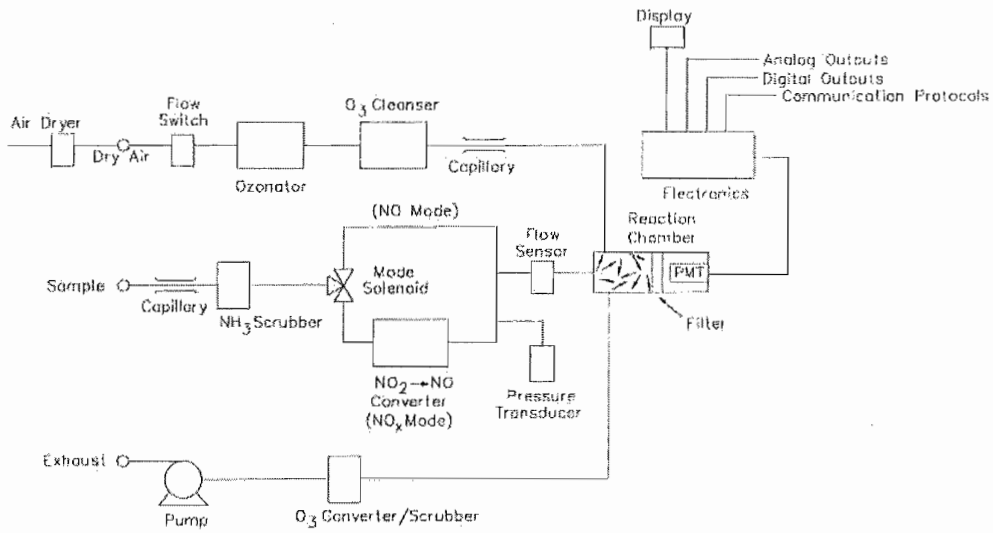

Figure 1-1. Model 42*i* Low Source Flow Schematic

Specifications

Table 1-1. Model 42*i* Low Source Specifications

Preset ranges	0-0.2, 0.5, 1, 2, 5, 10, 20, 50, 100 ppm 0-0.5, 1, 2, 5, 10, 20, 50, 100, 150 mg/m^3
Extended ranges	0-1, 2, 5, 10, 20, 50, 100, 200, 500 ppm 0-2, 5, 10, 20, 50, 100, 200, 500, 750 mg/m^3
Custom ranges	0-0.2 to 100 ppm (0-1 to 500 ppm in extended ranges) 0-0.5 to 150 mg/m^3 (0-2 to 750 mg/m^3 in extended ranges)
Zero noise	0.005 ppm RMS (60 second averaging time)
Lower detectable limit	0.01 ppm (60 second averaging time)
Zero drift (24 hour)	≈ 0.005 ppm
Span drift (24 hour)	± 1% full-scale
Response time (NO/NO_x mode)	15 sec (10 second averaging time) 85 sec (60 second averaging time) 305 sec (300 second averaging time)

MPU03546

Response time (NO mode)	15 sec (10 second averaging time) 65 sec (60 second averaging time) 305 sec (300 second averaging time)
Linearity	± 1% full-scale
Sample flow rate	≈ 25 cc/min. measured at atmospheric pressure
Operating temperature	15–35 °C (may be safely operated over the range of 0–45 °C)*
Power requirements	100 VAC @ 50/60 Hz 115 VAC @ 50/60 Hz 220–240 VAC @ 50/60 Hz 300 watts
Physical dimensions	16.75" (W) X 8.62" (H) X 23" (D)
Weight	Approximately 55 lbs.
Analog outputs	6 voltage outputs; 0–100 mV, 1 V, 5 V, 10 V (User selectable), 5% of full-scale over/under range, 12 bit resolution, user selectable for measurement input
Digital outputs	1 power fail relay Form C, 10 digital relays Form A, user selectable alarm output, relay logic, 100 mA @ 200 VDC
Digital inputs	16 digital inputs, user select programmable, TTL level, pulled high
Serial Ports	1 RS-232 or RS-485 with two connectors, baud rate 1200–115200, data bits, parity, and stop bits, protocols: C-Link, MODBUS, and streaming data (all user selectable)
Ethernet connection	RJ45 connector for 10Mbs Ethernet connection, static or dynamic TCP/IP addressing

*In non condensing environments. Performance specifications based on operation in 15–35 °C range.

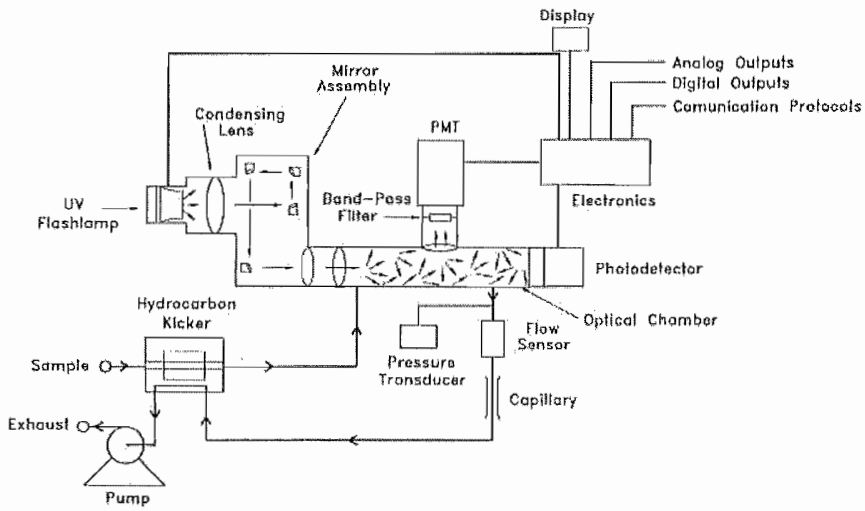

Figure 1-1. Model 43*i* Flow Schematic

Specifications

Table 1-1. Model 43*i* Specifications

Preset ranges	0-0.05, 0.1, 0.2, 0.5, 1, 2, 5, 10 ppm 0-0.2, 0.5, 1, 2, 5, 10, 20, 25 mg/m^3
Extended ranges	0-0.5, 1, 2, 5, 10, 20, 50, 100 ppm 0-2, 5, 10, 20, 50, 100, 200, 250 mg/m^3
Custom ranges	0-0.05 to 10 ppm (0-0.5 to 100 ppm in extended range) 0-0.2 to 25 mg/m^3 (0-2 to 250 mg/m^3 in extended range)
Zero noise	1.0 ppb RMS (10 second averaging time) 0.5 ppb RMS (60 second averaging time) 0.25 ppb RMS (300 second averaging time)
Lower detectable limit	2.0 ppb (10 second averaging time) 1.0 ppb (60 second averaging time) 0.5 ppb (300 second averaging time)
Zero drift (24 hour)	< 1 ppb
Span drift	± 1% full-scale
Response time (in automatic mode)	80 sec (10 second averaging time) 110 sec (60 second averaging time) 320 sec (300 second averaging time)
Linearity	± 1% of full-scale

MPU03548

Sample flow rate	0.5 LPM (standard) 1 LPM (optional)
Interferences (tested at levels specified by EPA)	less than lower detectable limit except for the following: NO: < 3 ppb, tested at 500 ppb M-Xylene: tested at 200 ppb H_2O: tested at 2% of reading
Operating temperature	20–30 °C (may be safely operated over the range of 0–45 °C)*
Power requirements	100 VAC @ 50/60 Hz 115 VAC @ 50/60 Hz 220-240 VAC @ 50/60 Hz 165 watts
Physical dimensions	16.75" (W) X 8.62" (H) X 23" (D)
Weight	Approximately 48 lbs.
Analog outputs	6 voltage outputs; 0–100 mV, 1, 5, 10 V (user selectable), 5% of full-scale over/under range, 12 bit resolution, user selectable for measurement input
Digital outputs	1 power fail relay Form C, 10 digital relays Form A, user selectable alarm output, relay logic, 100 mA @ 200 VDC
Digital inputs	16 digital inputs, user select programmable, TTL level, pulled high
Serial Ports	1 RS-232 or RS-485 with two connectors, baud rate 1200–115200, data bits, parity, and stop bits, protocols: C-Link, MODBUS, and streaming data (all user selectable)
Ethernet connection	RJ45 connector for 10Mbs Ethernet connection, static or dynamic TCP/IP addressing

*In non condensing environments. Performance specifications based on operation within 20–30 °C range.

Table 1-2. Model 43*i* Optional Permeation Oven Specifications

Temperature control	Single Point 45 °C
Temperature stability	± 0.1 °C
Warm-up time	1 hour (permeation device can take 24 to 48 hours to stabilize)
Carrier gas flow	≈ 70 scc/min
Chamber size	Accepts permeation tubes up to 9 cm in total length; 1 cm in diameter
Temperature range	20–30 °C
Physical dimensions	Contained inside the Model 43*i*
Power requirements	120 VAC @ 50/60 Hz, 50 watts (in addition to the standard Model 43*i*)
Weight	Approximatedly 5 lbs. (in addition to the standard Model 43*i*)

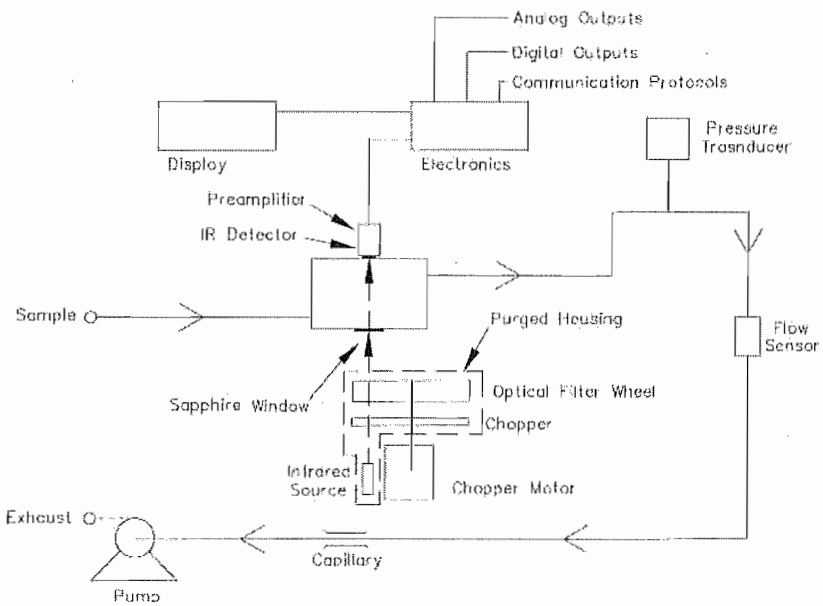

Figure 1-1. Model 410*i* Flow Schematic

Specifications

Table 1-1. Model 410*i* Specifications CO_2

Preset ranges	Standard: 0-200, 500, 1000, 2000, 5000, 10000 ppm High Level: 0-0.5, 1, 2, 5, 10, 20, 25%
Custom ranges	Standard: 0-200 to 10000 ppm High Level: 0-0.5 to 25%
Zero noise	Standard: 0.5 ppm RMS (60 second averaging time) High Level: 20 ppm RMS (60 second averaging time)
Minimum detectable limit	Standard: 1 ppm High Level: 40 ppm
Zero drift (24 hour)	± 1.0 ppm
Span drift (24 hour)	± 2% span concentration
Response time	90 seconds (30 second averaging time)
Linearity	± 1.5% of span (at concentrations of 10 to 100% of span)
Sample flow rate	1.0 LPM
Operating temperature	5–45 °C

MPU03550

Power requirements	100 VAC @ 50/60 Hz 115 VAC @ 50/60 Hz 220–240 VAC @ 50/60 Hz 275 watts
Physical dimensions	16.75" (W) X 8.62" (H) X 23" (D)
Weight	Approximately 39 lbs.
Analog outputs	6 voltage outputs; 0–100 mV, 1, 5, 10 V (User selectable), 5% of full-scale over/under range, 12 bit resolution, user selectable for measurement input
Digital outputs	1 power fail relay Form C, 10 digital relays Form A, user selectable alarm output, relay logic, 100 mA @ 200 VDC
Digital inputs	16 digital inputs, user select programmable, TTL level, pulled high
Serial Ports	1 RS-232 or RS-485 with two connectors, baud rate 1200–115200, Protocols: C-Link, MODBUS, and streaming data (all user selectable)
Ethernet connection	RJ45 connector for 10Mbs Ethernet connection, static or dynamic TCP/IP addressing

MPU03551

APPENDIX G

CEM INSTRUMENT INFORMATION SHEET

INTERPOLL LABORATORIES, INC.
(763) 786-6020

CEM Relative Accuracy Certification Instrument Information Sheet

Plant Name: MPU

Pollutant Gas Monitor Data:

Vendor: THERMO ENVIRONMENTAL

Model: 42 I NOx S/N 42I 0510511561

CEM Location: B9 SHELTER

Gas (es): ☐ SO2 ☒ NOx ☐ CO

Type of System: ☐ In-Situ ☐ Dry-Extractive ☒ Dilution

Installation Date: 8-15-2005

Start-Up Date: 1-1-2006

INITIAL CERT: 03-07-2006

Data Recording System:

☐ Strip Chart Recorder ☒ Data Logger System

☒ Computer

Relative Accuracy Certification Units:

☐ ppm, dry ☐ LB/106BTU by O2 F-Factor

☒ ppm, wet ☒ LB/106BTU by CO2 F-Factor

Span Value (ppm): (DUAL RANGE)

SO2

NOx LOW: 200 HIGH: 500

CO

Tom Ned

Signature of Person Responsible for Data

Plant Location: UNIT 9

Diluent Monitor Data: SEE SO2 FORM

Vendor:

Model: S/N

CEM Location:

Gas: ☐ O2 ☐ CO2

Type of System: ☐ In-Situ ☐ Dry-Extractive ☐ Dilution

Instillation Date:

Start-Up Date:

Data Recording System:

☐ Strip Chart Recorder ☐ Data Logger System

☐ Computer

Output Units:

☐ %O2, dry ☐ % CO2, dry

☐ %O2, wet ☐ % CO2, wet

Span Gas Values (% v/v):

********Oxygen******** ***Carbon Dioxide***

Low

High

10-17-07

Date

MPU03553

INTERPOLL LABORATORIES, INC.
(763) 786-6020

CEM Relative Accuracy Certification Instrument Information Sheet

Plant Name: MANITOWOC PUBLIC UTILITIES-MPU

Plant Location: UNIT 9

Pollutant Gas Monitor Data:

Vendor: THERMO ENVIRONMENTAL

Model: 43I SO_2 S/N 43I0510511567

CEM Location: B9 SHELTER

Gas (es): ☒ SO2 ☐ NOx ☐ CO

Type of System: ☐ In-Situ ☐ Dry-Extractive ☒ Dilution

Installation Date: 8-15-2005

Start-Up Date: 1-1-2006

INITIAL CERT. 03-07-2006

Data Recording System:

☐ Strip Chart Recorder ☒ Data Logger System

☒ Computer

Relative Accuracy Certification Units:

☐ ppm, dry ☐ LB/106BTU by O2 F-Factor

☒ ppm, wet ☒ LB/106BTU by CO2 F-Factor

Span Value (ppm): (DUAL RANGE)

SO2 LOW: 400 HIGH: 4000

NOx

CO

Diluent Monitor Data:

Vendor: THERMO ENVIRONMENTAL

Model: 410I CO_2 S/N 410I0510511584

CEM Location: B9 SHELTER

Gas: ☐ O2 ☒ CO2

Type of System: ☐ In-Situ ☐ Dry-Extractive ☒ Dilution

Instillation Date: 8-15-2005

Start-Up Date: 1-1-2006

INITIAL CERT. 03-07-2006

Data Recording System:

☐ Strip Chart Recorder ☒ Data Logger System

☒ Computer

Output Units:

☐ %O2, dry ☐ % CO2, dry

☐ %O2, wet ☒ % CO2, wet

Span Gas Values (% v/v):

	*********Oxygen********	***Carbon Dioxide***
Low		0
High		20.00

Ron Reed

Signature of Person Responsible for Data

10-17-07

Date

2

MPU03554

INTERPOLL LABORATORIES, INC.
(763) 786-6020

Flow Monitor Relative Field Accuracy Instrument Information Sheet

Plant Name: MPU

Flow Monitor Data:

Vendor: UNITED SCIENCES, INC

Model: ULTRAFLOW 150 S/N 1500188

Location: B9 SHELTER & BREACHING

Type of System: ☐ Differential Pressure ☒ Ultrasonic

Installation Date: 8-15-2005

Start-Up Date: 1-1-2006

INITIAL CERT: 02-23-2006

Data Recording System:

☐ Strip Chart Recorder ☒ Data Logger System

☒ Computer

Plant Location: UNIT 9

Diluent Monitor Data:

Vendor:

Model: S/N

Location:

Gas: ☐ O2 ☐ CO2

Type of System: ☐ In-Situ ☐ Dry-Extractive

☐ Extractive - Dilution

Instillation Date:

Start-Up Date:

Data Recording System:

☐ Strip Chart Recorder ☐ Data Logger System

☐ Computer

Output Units:

☐ %O2, dry ☐ % CO2, dry

☐ %O2, wet ☐ % CO2, wet

Span Gas Values (% v/v):

*********Oxygen******** ***Carbon Dioxide***

Low

High

Tom Reed

Signature of Person Responsible for Data

10-17-07

Date

3

MPU03555

INTERPOLL LABORATORIES, INC.
(763) 786-6020

CEM Relative Accuracy Certification Instrument Information Sheet

Plant Name: MANITOWOC Public UTILITIES

Pollutant Gas Monitor Data:

Vendor: THERMO ENVIRONMENTAL

Model: 48i S/N 48I6510511587

Location: B9

Gas (es): ☐ SO2 ☐ NOx ☒ CO

Type of System: ☐ In-Situ ☐ Extractive ☒ Dilution

Probe Manufacturer: EPM

Installation Date: 4 AUG 05

Start-Up Date: 4 AUG 05

Data Recording System:

☐ Strip Chart Recorder ☒ Data Logger System

☐ Computer

Relative Accuracy Certification Units:

☐ ppm, dry ☐ LB/106BTU by O2 F-Factor

☒ ppm, wet ☐ LB/106BTU by CO2 F-Factor

Span Value (ppm):

SO2

NOx

CO 100/5000

Roland E Derbach

Signature of Person Responsible for Data

Plant Location:

Diluent Monitor Data:

Vendor:

Model: S/N

Location:

Gas: ☐ O2 ☐ CO2

Type of System: ☐ In-Situ ☐ Extractive ☐ Dilution

Installation Date:

Start-Up Date:

Data Recording System:

☐ Strip Chart Recorder ☐ Data Logger System

☐ Computer

Output Units:

☐ %O2, dry ☐ % CO2, dry

☐ %O2, wet ☐ % CO2, wet

Span Gas Values (% v/v):

	*********Oxygen********	***Carbon Dioxide***
Low		
High		

Date

MPU03556

APPENDIX H

CEM COMPUTER PRINTOUTS

RATA Test - Part 75

Plant: MPU Source: B9

Parameter: B9CPCO2
Effective Date/Time: 07/24/2013 03:10
Monitoring System ID: X09
Test Reason: QA-Periodic Quality Assurance
Overall RA: 1.67
CEMS Time Offset :
Test Comment:

Unit of Measure: PERCENT
Test Number: XML (X09-Q3-2013-002) / EDR (1)
Frequency: 4QTRS
Test Result: **Passed**
Overall BAF: 1.000

Operating Level: Low
Mean CEMS: 10.089
Mean Reference: 9.989
Mean Difference: -0.100

Level BAF: 1.000
Relative Accuracy: 1.67
Standard Deviation: 0.087
Confidence Coefficient: 0.067

APS Indicator: False
tValue: 2.306
Avg Load: 180

Report in EDR: Y
Use BAF: Y
Reference Method: 3A

Run	Started	Ended	Reference Value	CEMS Value	Difference	Load	Use
1	07/23/2013 21:15	07/23/2013 21:35	10.0	10.2	-0.2	180	Y
2	07/23/2013 21:45	07/23/2013 22:05	9.9	10.1	-0.2	179	Y
3	07/23/2013 22:15	07/23/2013 22:35	9.9	10.1	-0.2	181	Y
4	07/23/2013 22:45	07/23/2013 23:05	9.9	10.0	-0.1	179	Y
5	07/23/2013 23:15	07/23/2013 23:35	9.9	10.0	-0.1	180	Y
6	07/23/2013 23:45	07/24/2013 00:05	9.9	10.0	-0.1	180	Y
7	07/24/2013 00:20	07/24/2013 00:40	10.1	10.1	0.0	182	Y
8	07/24/2013 00:50	07/24/2013 01:10	10.2	10.1	0.1	180	
9	07/24/2013 01:20	07/24/2013 01:40	10.2	10.2	0.0	181	Y
10	07/24/2013 01:50	07/24/2013 02:10	10.1	10.1	0.0	181	Y

MPU03558

RATA Test - Part 75

Plant: MPU Source: B9

Parameter:	B9CPFLOW	Unit of Measure:	SCFH
Effective Date/Time:	07/24/2013 02:59	Test Number:	XML (X03-Q3-2013-002) / EDR (1)
Monitoring System ID:	X03	Frequency:	4QTRS
Test Reason:	QA-Periodic Quality Assurance	Test Result:	**Passed**
Overall RA:	1.35	Overall BAF:	1.000
CEMS Time Offset :			
Test Comment:			

Operating Level:	Low	Level BAF:	1.000	APS Indicator:	False	Report in EDR:	Y
Mean CEMS:	4,807,555.556	Relative Accuracy:	1.35	tValue:	2.306	Use BAF:	Y
Mean Reference:	4,836,444.444	Standard Deviation:	47,332.453	Avg Load:	180	Reference Method:	2
Mean Difference:	28,888.889	Confidence Coefficient:	36,382.879				
Flow/Load Ratio:	0.27	CO/O2 RM Used:		Stack Dia:		Default WAF:	
Heat/Load Ratio:	1478	Reference Heat:		Stack Area:		Calculated WAF:	

2

Run	Started	Ended	Reference Value	CEMS Value	Difference	Load	Use
1	07/23/2013 21:15	07/23/2013 21:24	4,907,000.0	4,824,000.0	83,000.0	180	
2	07/23/2013 21:45	07/23/2013 21:54	4,861,000.0	4,811,000.0	50,000.0	178	Y
3	07/23/2013 22:15	07/23/2013 22:24	4,894,000.0	4,822,000.0	72,000.0	181	Y
4	07/23/2013 22:45	07/23/2013 22:54	4,857,000.0	4,811,000.0	46,000.0	178	Y
5	07/23/2013 23:15	07/23/2013 23:24	4,867,000.0	4,789,000.0	78,000.0	180	Y
6	07/23/2013 23:45	07/23/2013 23:54	4,847,000.0	4,807,000.0	40,000.0	181	Y
7	07/24/2013 00:20	07/24/2013 00:29	4,808,000.0	4,818,000.0	-10,000.0	182	Y
8	07/24/2013 00:50	07/24/2013 00:59	4,746,000.0	4,805,000.0	-59,000.0	180	Y
9	07/24/2013 01:20	07/24/2013 01:29	4,857,000.0	4,794,000.0	63,000.0	181	Y
10	07/24/2013 01:50	07/24/2013 01:59	4,791,000.0	4,811,000.0	-20,000.0	180	Y

MPU03559

RATA Test - Part 75

Plant: MPU Source: B9

Parameter:	B9CPNOX	Unit of Measure:	PPM
Effective Date/Time:	07/24/2013 03:10	Test Number:	XML (X06-Q3-2013-002) / EDR (1)
Monitoring System ID:	X06	Frequency:	4QTRS
Test Reason:	QA-Periodic Quality Assurance	Test Result:	**Passed**
Overall RA:	3.69	Overall BAF:	1.025
CEMS Time Offset :			
Test Comment:			

Operating Level:	Low	Level BAF:	1.025	APS Indicator:	False	Report in EDR:	Y
Mean CEMS:	56.033	Relative Accuracy:	3.69	tValue:	2.306	Use BAF:	Y
Mean Reference:	57.444	Standard Deviation:	0.925	Avg Load:	180	Reference Method:	7E
Mean Difference:	1.411	Confidence Coefficient:	0.711				

Run	Started	Ended	Reference Value	CEMS Value	Difference	Load	Use
1	07/23/2013 21:15	07/23/2013 21:35	57.4	54.7	2.7	180	
2	07/23/2013 21:45	07/23/2013 22:05	58.7	57.5	1.2	179	Y
3	07/23/2013 22:15	07/23/2013 22:35	50.1	49.9	0.2	181	Y
4	07/23/2013 22:45	07/23/2013 23:05	56.6	56.9	-0.3	179	Y
5	07/23/2013 23:15	07/23/2013 23:35	53.8	52.4	1.4	180	Y
6	07/23/2013 23:45	07/24/2013 00:05	55.4	53.7	1.7	180	Y
7	07/24/2013 00:20	07/24/2013 00:40	48.7	47.0	1.7	182	Y
8	07/24/2013 00:50	07/24/2013 01:10	57.8	55.7	2.1	180	Y
9	07/24/2013 01:20	07/24/2013 01:40	67.2	64.8	2.4	181	Y
10	07/24/2013 01:50	07/24/2013 02:10	68.7	66.4	2.3	181	Y

RATA Test - Part 75

Plant: MPU Source: B9

Parameter:	B9CPSO2	Unit of Measure:	PPM
Effective Date/Time:	07/24/2013 03:10	Test Number:	XML (X01-Q3-2013-002) / EDR (1)
Monitoring System ID:	X01	Frequency:	4QTRS
Test Reason:	QA-Periodic Quality Assurance	Test Result:	**Passed**
Overall RA:	6.13	Overall BAF:	1.041
CEMS Time Offset :			
Test Comment:			

Operating Level:	Low	Level BAF:	1.041	APS Indicator:	False	Report in EDR:	Y
Mean CEMS:	77.578	Relative Accuracy:	6.13	tValue:	2.306	Use BAF:	Y
Mean Reference:	80.789	Standard Deviation:	2.265	Avg Load:	180	Reference Method:	6C
Mean Difference:	3.211	Confidence Coefficient:	1.741				

Run	Started	Ended	Reference Value	CEMS Value	Difference	Load	Use
1	07/23/2013 21:15	07/23/2013 21:35	54.4	59.2	-4.8	180	
2	07/23/2013 21:45	07/23/2013 22:05	74.2	71.7	2.5	179	Y
3	07/23/2013 22:15	07/23/2013 22:35	82.0	82.6	-0.6	181	Y
4	07/23/2013 22:45	07/23/2013 23:05	61.0	57.9	3.1	179	Y
5	07/23/2013 23:15	07/23/2013 23:35	98.2	91.1	7.1	180	Y
6	07/23/2013 23:45	07/24/2013 00:05	84.1	79.7	4.4	180	Y
7	07/24/2013 00:20	07/24/2013 00:40	98.6	95.5	3.1	182	Y
8	07/24/2013 00:50	07/24/2013 01:10	77.8	77.2	0.6	180	Y
9	07/24/2013 01:20	07/24/2013 01:40	75.4	71.2	4.2	181	Y
10	07/24/2013 01:50	07/24/2013 02:10	75.8	71.3	4.5	181	Y

RATA Test - Part 75

Plant: MPU Source: B9

Parameter:	B9NOX#M	Unit of Measure:	#/MMBTU
Effective Date/Time:	07/24/2013 03:10	Test Number:	XML (X05-Q3-2013-002) / EDR (1)
Monitoring System ID:	X05	Frequency:	4QTRS
Test Reason:	QA-Periodic Quality Assurance	Test Result:	**Passed**
Overall RA:	5.70	Overall BAF:	1.048
CEMS Time Offset :			
Test Comment:			

Operating Level:	Low	Level BAF:	1.048	APS Indicator:	False	Report in EDR:	Y
Mean CEMS:	0.122	Relative Accuracy:	5.70	tValue:	2.306	Use BAF:	Y
Mean Reference:	0.127	Standard Deviation:	0.002	Avg Load:	180	Reference Method:	
Mean Difference:	0.006	Confidence Coefficient:	0.001				

Run	Started	Ended	Reference Value	CEMS Value	Difference	Load	Use
1	07/23/2013 21:15	07/23/2013 21:35	0.126	0.118	0.008	180	Y
2	07/23/2013 21:45	07/23/2013 22:05	0.130	0.124	0.006	179	Y
3	07/23/2013 22:15	07/23/2013 22:35	0.112	0.108	0.004	181	Y
4	07/23/2013 22:45	07/23/2013 23:05	0.126	0.124	0.002	179	Y
5	07/23/2013 23:15	07/23/2013 23:35	0.120	0.114	0.006	180	Y
6	07/23/2013 23:45	07/24/2013 00:05	0.125	0.117	0.008	180	
7	07/24/2013 00:20	07/24/2013 00:40	0.108	0.102	0.006	182	Y
8	07/24/2013 00:50	07/24/2013 01:10	0.127	0.120	0.007	180	Y
9	07/24/2013 01:20	07/24/2013 01:40	0.148	0.140	0.008	181	Y
10	07/24/2013 01:50	07/24/2013 02:10	0.149	0.144	0.005	181	Y

RATA Test - Permit

Plant: MPU Source: B9

Parameter: B9CO#M
Effective Date/Time: 07/24/2013 03:10
Test Result: **Passed**
Overall RA: 15.38
CEMS Time Offset :
Test Comment:

RA Calc Method: Standard Equation

Operating Level: Low
Mean CEMS: 0.021
Mean Reference: 0.022
Mean Difference: 0.000

Relative Accuracy: 15.38
Standard Deviation: 0.004
Confidence Coefficient: 0.003

APS Indicator: False
tValue: 2.306
Avg Load: 180

Run	Started	Ended	Reference Value	CEMS Value	Difference	Load	Use
1	07/23/2013 21:15	07/23/2013 21:35	0.018	0.020	-0.002	180	Y
2	07/23/2013 21:45	07/23/2013 22:05	0.024	0.020	0.004	179	Y
3	07/23/2013 22:15	07/23/2013 22:35	0.024	0.020	0.004	181	Y
4	07/23/2013 22:45	07/23/2013 23:05	0.023	0.018	0.005	179	Y
5	07/23/2013 23:15	07/23/2013 23:35	0.021	0.017	0.004	180	Y
6	07/23/2013 23:45	07/24/2013 00:05	0.021	0.023	-0.002	180	Y
7	07/24/2013 00:20	07/24/2013 00:40	0.022	0.027	-0.005	182	Y
8	07/24/2013 00:50	07/24/2013 01:10	0.020	0.025	-0.005	180	
9	07/24/2013 01:20	07/24/2013 01:40	0.020	0.023	-0.003	181	Y
10	07/24/2013 01:50	07/24/2013 02:10	0.023	0.024	-0.001	181	Y

6

MPU03563

RATA Test - Permit

Plant: MPU Source: B9

Parameter: B9PCO
Effective Date/Time: 07/24/2013 03:10
Test Result: **Passed**
Overall RA: 14.80
CEMS Time Offset :
Test Comment:

RA Calc Method: Standard Equation

Operating Level: Low
Mean CEMS: 15.978
Mean Reference: 15.867
Mean Difference: -0.111

Relative Accuracy: 14.80
Standard Deviation: 2.911
Confidence Coefficient: 2.237

APS Indicator: False
tValue: 2.306
Avg Load: 180

Run	Started	Ended	Reference Value	CEMS Value	Difference	Load	Use
1	07/23/2013 21:15	07/23/2013 21:35	13.3	15.3	-2.0	180	Y
2	07/23/2013 21:45	07/23/2013 22:05	17.5	15.0	2.5	179	Y
3	07/23/2013 22:15	07/23/2013 22:35	17.7	14.9	2.8	181	Y
4	07/23/2013 22:45	07/23/2013 23:05	17.1	13.6	3.5	179	Y
5	07/23/2013 23:15	07/23/2013 23:35	15.3	12.8	2.5	180	Y
6	07/23/2013 23:45	07/24/2013 00:05	15.1	17.4	-2.3	180	Y
7	07/24/2013 00:20	07/24/2013 00:40	15.9	20.4	-4.5	182	
8	07/24/2013 00:50	07/24/2013 01:10	14.8	18.8	-4.0	180	Y
9	07/24/2013 01:20	07/24/2013 01:40	14.8	17.8	-3.0	181	Y
10	07/24/2013 01:50	07/24/2013 02:10	17.2	18.2	-1.0	181	Y

7

MPU03564

RATA Test - Permit

Plant: MPU Source: B9

Parameter: B9SO2#M
Effective Date/Time: 07/24/2013 03:10
Test Result: **Passed**
Overall RA: 7.81
CEMS Time Offset :
Test Comment:

Operating Level: Low
Mean CEMS: 0.223
Mean Reference: 0.234
Mean Difference: 0.011
Relative Accuracy: 7.81
Standard Deviation: 0.009
Confidence Coefficient: 0.007
APS Indicator: False
tValue: 2.306
Avg Load: 180

Run	Started	Ended	Reference Value	CEMS Value	Difference	Load	Use
1	07/23/2013 21:15	07/23/2013 21:35	0.169	0.177	-0.008	180	Y
2	07/23/2013 21:45	07/23/2013 22:05	0.229	0.216	0.013	179	Y
3	07/23/2013 22:15	07/23/2013 22:35	0.254	0.249	0.005	181	Y
4	07/23/2013 22:45	07/23/2013 23:05	0.189	0.176	0.013	179	Y
5	07/23/2013 23:15	07/23/2013 23:35	0.304	0.277	0.027	180	
6	07/23/2013 23:45	07/24/2013 00:05	0.265	0.242	0.023	180	Y
7	07/24/2013 00:20	07/24/2013 00:40	0.305	0.287	0.018	182	Y
8	07/24/2013 00:50	07/24/2013 01:10	0.238	0.232	0.006	180	Y
9	07/24/2013 01:20	07/24/2013 01:40	0.231	0.213	0.018	181	Y
10	07/24/2013 01:50	07/24/2013 02:10	0.228	0.215	0.013	181	Y

MPU03565

RATA Test - Part 75

Plant: MPU Source: B9

Parameter: B9CPFLOW
Effective Date/Time: 07/24/2013 13:35
Monitoring System ID: X03
Test Reason: QA-Periodic Quality Assurance
Overall RA: 2.98
CEMS Time Offset :
Test Comment:

Unit of Measure: SCFH
Test Number: XML (X03-Q3-2013-003) / EDR (2)
Frequency: 4QTRS
Test Result: **Passed**
Overall BAF:

Operating Level: Mid
Mean CEMS: 6,231,666.667
Mean Reference: 6,288,111.111
Mean Difference: 56,444.444

Level BAF: 1.000
Relative Accuracy: 2.98
Standard Deviation: 170,644.448
Confidence Coefficient: 131,168.699

APS Indicator: False
tValue: 2.306
Avg Load: 299

Report in EDR: Y
Use BAF: Y
Reference Method: 2

Flow/Load Ratio: 0.21
Heat/Load Ratio: 1526

CO/O2 RM Used:
Reference Heat:

Stack Dia:
Stack Area:

Default WAF:
Calculated WAF:

Run	Started	Ended	Reference Value	CEMS Value	Difference	Load	Use
1	07/24/2013 11:10	07/24/2013 11:16	6,294,000.0	6,233,000.0	61,000.0	296	Y
2	07/24/2013 11:17	07/24/2013 11:23	5,762,000.0	6,270,000.0	-508,000.0	299	
3	07/24/2013 11:24	07/24/2013 11:30	5,890,000.0	6,275,000.0	-385,000.0	299	Y
4	07/24/2013 11:40	07/24/2013 11:46	6,359,000.0	6,238,000.0	121,000.0	299	Y
5	07/24/2013 11:47	07/24/2013 11:53	6,438,000.0	6,238,000.0	200,000.0	300	Y
6	07/24/2013 11:54	07/24/2013 12:00	6,360,000.0	6,247,000.0	113,000.0	300	Y
7	07/24/2013 12:08	07/24/2013 12:14	6,319,000.0	6,224,000.0	95,000.0	299	Y
8	07/24/2013 12:15	07/24/2013 12:21	6,347,000.0	6,204,000.0	143,000.0	299	Y
9	07/24/2013 12:22	07/24/2013 12:28	6,291,000.0	6,211,000.0	80,000.0	300	Y
10	07/24/2013 12:29	07/24/2013 12:35	6,295,000.0	6,215,000.0	80,000.0	300	Y

MPU03566

B9 LOW FLOW
RATA
RUN #1

Average Data

Plant: Manitowoc Public Utilities
Interval: 1 Minute
Type: Roll
Report Period: 07/23/2013 21:15 Through 07/23/2013 21:25
Time Online Criteria: 1 minute(s)

Source	B9					
Parameter)Unit(	B9CPFLOW (SCFH)	B9FFACT (MMBTU/CF)	B9PFLOW (KSCFM)	B9PVAC (INCHESHG)	B9STEAM (KLBS/HR)	B9STEMP (DEGFAHR)
07/23/13 21:15	4,802,301.0	1,833.0	80.0	29.32	182	328.1
07/23/13 21:16	4,836,071.0	1,833.0	80.6	29.34	179	328.2
07/23/13 21:17	4,843,251.0	1,833.0	80.7	29.31	178	328.1
07/23/13 21:18	4,836,154.0	1,833.0	80.6	29.33	180	328.1
07/23/13 21:19	4,802,076.0	1,833.0	80.0	29.33	180	328.5
07/23/13 21:20	4,806,590.0	1,833.0	80.1	29.34	182	328.6
07/23/13 21:21	4,842,439.0	1,833.0	80.7	29.34	178	328.5
07/23/13 21:22	4,839,206.0	1,833.0	80.7	29.32	175	328.6
07/23/13 21:23	4,820,048.0	1,833.0	80.3	29.32	181	328.8
07/23/13 21:24	4,812,804.0	1,833.0	80.2	29.32	181	329.0
07/23/13 21:25	4,807,559.0	1,833.0	80.1	29.32	180	329.1
Average	4,822,590.8	1,833.0	80.4	29.33	180	328.5
Minimum	4,802,076.0	1,833.0	80.0	29.31	175	328.1
Maximum	4,843,251.0	1,833.0	80.7	29.34	182	329.1
Summation	53,048,499.0	20,163.0	884.0	322.59	1,976	3,613.6
Included Data Points	11	11	11	11	11	11
Total number of Data Points	11	11	11	11	11	11

10

F = Unit Offline E = Exceedance C = Calibration S = Substituted I = Invalid
M = Maintenance T = Out Of Control * = Suspect U = Startup D = Shutdown

MPU03567

B9 Low Flow
RSCA
Run #2

Average Data

Plant: Manitowoc Public Utilities
Interval: 1 Minute
Type: Roll with BAF Applied
Report Period: 07/23/2013 21:45 Through 07/23/2013 21:55
Time Online Criteria: 1 minute(s)

Source	B9					
Parameter)Unit(	B9CPFLOW (SCFH)	B9FFACT (MMBTU/CF)	B9PFLOW (KSCFM)	B9PVAC (INCHESHG)	B9STEAM (KLBS/HR)	B9STEMP (DEGFAHR)
07/23/13 21:45	4,831,188.0	1,833.0	80.5	29.34	178	329.2
07/23/13 21:46	4,820,829.0	1,833.0	80.3	29.34	178	329.2
07/23/13 21:47	4,847,598.0	1,833.0	80.8	29.34	177	329.4
07/23/13 21:48	4,883,533.0	1,833.0	81.4	29.34	178	329.7
07/23/13 21:49	4,854,857.0	1,833.0	80.9	29.33	179	329.8
07/23/13 21:50	4,810,045.0	1,833.0	80.2	29.34	177	329.8
07/23/13 21:51	4,776,133.0	1,833.0	79.6	29.34	179	329.5
07/23/13 21:52	4,749,739.0	1,833.0	79.2	29.33	177	328.9
07/23/13 21:53	4,755,030.0	1,833.0	79.3	29.33	181	328.5
07/23/13 21:54	4,778,121.0	1,833.0	79.6	29.34	181	328.9
07/23/13 21:55	4,783,685.0	1,833.0	79.7	29.33	179	329.2
Average	4,808,250.7	1,833.0	80.1	29.34	179	329.3
Minimum	4,749,739.0	1,833.0	79.2	29.33	177	328.5
Maximum	4,883,533.0	1,833.0	81.4	29.34	181	329.8
Summation	52,890,758.0	20,163.0	881.5	322.70	1,964	3,622.1
Included Data Points	11	11	11	11	11	11
Total number of Data Points	11	11	11	11	11	11

11

F = Unit Offline E = Exceedance C = Calibration S = Substituted I = Invalid
M = Maintenance T = Out Of Control * = Suspect U = Startup D = Shutdown

MPU03568

B9 Low Flow
Run #3

Average Data

Plant: Manitowoc Public Utilities
Interval: 1 Minute
Type: Roll with BAF Applied
Report Period: 07/23/2013 22:15 Through 07/23/2013 22:25
Time Online Criteria: 1 minute(s)

Source	B9					
Parameter)Unit(	B9CPFLOW (SCFH)	B9FFACT (MMBTU/CF)	B9PFLOW (KSCFM)	B9PVAC (INCHESHG)	B9STEAM (KLBS/HR)	B9STEMP (DEGFAHR)
07/23/13 22:15	4,815,750.0	1,833.0	80.3	29.35	186	329.2
07/23/13 22:16	4,790,635.0	1,833.0	79.8	29.34	186	329.0
07/23/13 22:17	4,775,681.0	1,833.0	79.6	29.33	183	328.8
07/23/13 22:18	4,822,265.0	1,833.0	80.4	29.34	180	329.2
07/23/13 22:19	4,870,737.0	1,833.0	81.2	29.35	180	329.3
07/23/13 22:20	4,858,150.0	1,833.0	81.0	29.34	179	329.2
07/23/13 22:21	4,828,115.0	1,833.0	80.5	29.36	182	329.3
07/23/13 22:22	4,823,379.0	1,833.0	80.4	29.34	181	329.3
07/23/13 22:23	4,832,916.0	1,833.0	80.5	29.35	180	329.2
07/23/13 22:24	4,803,899.0	1,833.0	80.1	29.36	178	329.1
07/23/13 22:25	4,813,124.0	1,833.0	80.2	29.33	178	328.9
Average	4,821,331.9	1,833.0	80.4	29.34	181	329.1
Minimum	4,775,681.0	1,833.0	79.6	29.33	178	328.8
Maximum	4,870,737.0	1,833.0	81.2	29.36	186	329.3
Summation	53,034,651.0	20,163.0	884.0	322.79	1,993	3,620.5
Included Data Points	11	11	11	11	11	11
Total number of Data Points	11	11	11	11	11	11

12

MPU03569

F = Unit Offline E = Exceedance C = Calibration S = Substituted I = Invalid
M = Maintenance T = Out Of Control * = Suspect U = Startup D = Shutdown

B9 Low Flow
Run #4

Average Data

Plant: Manitowoc Public Utilities
Interval: 1 Minute
Type: Roll with BAF Applied
Report Period: 07/23/2013 22:45 Through 07/23/2013 22:55
Time Online Criteria: 1 minute(s)

Source	B9					
Parameter)Unit(	B9CPFLOW (SCFH)	B9FFACT (MMBTU/CF)	B9PFLOW (KSCFM)	B9PVAC (INCHESHG)	B9STEAM (KLBS/HR)	B9STEMP (DEGFAHR)
07/23/13 22:45	4,828,229.0	1,833.0	80.5	29.35	179	329.4
07/23/13 22:46	4,801,834.0	1,833.0	80.0	29.34	178	329.4
07/23/13 22:47	4,826,138.0	1,833.0	80.4	29.35	175	329.6
07/23/13 22:48	4,838,069.0	1,833.0	80.6	29.37	179	329.7
07/23/13 22:49	4,823,869.0	1,833.0	80.4	29.35	180	329.6
07/23/13 22:50	4,806,198.0	1,833.0	80.1	29.35	177	329.3
07/23/13 22:51	4,795,411.0	1,833.0	79.9	29.34	176	329.0
07/23/13 22:52	4,797,999.0	1,833.0	80.0	29.34	178	328.9
07/23/13 22:53	4,794,255.0	1,833.0	79.9	29.35	178	329.0
07/23/13 22:54	4,799,895.0	1,833.0	80.0	29.35	181	329.1
07/23/13 22:55	4,803,552.0	1,833.0	80.1	29.35	178	329.1
Average	4,810,495.4	1,833.0	80.2	29.35	178	329.3
Minimum	4,794,255.0	1,833.0	79.9	29.34	175	328.9
Maximum	4,838,069.0	1,833.0	80.6	29.37	181	329.7
Summation	52,915,449.0	20,163.0	881.9	322.84	1,959	3,622.1
Included Data Points	11	11	11	11	11	11
Total number of Data Points	11	11	11	11	11	11

13

MPU03570

F = Unit Offline E = Exceedance C = Calibration S = Substituted I = Invalid
M = Maintenance T = Out Of Control * = Suspect U = Startup D = Shutdown

B9 low flow RATA
Run # 5

Average Data

Plant: Manitowoc Public Utilities
Interval: 1 Minute
Type: Roll with BAF Applied
Report Period: 07/23/2013 23:15 Through 07/23/2013 23:25
Time Online Criteria: 1 minute(s)

Source	B9					
Parameter)Unit(	B9CPFLOW (SCFH)	B9FFACT (MMBTU/CF)	B9PFLOW (KSCFM)	B9PVAC (INCHESHG)	B9STEAM (KLBS/HR)	B9STEMP (DEGFAHR)
07/23/13 23:15	4,774,108.0	1,833.0	79.6	29.35	181	329.6
07/23/13 23:16	4,788,022.0	1,833.0	79.8	29.33	178	329.3
07/23/13 23:17	4,771,045.0	1,833.0	79.5	29.33	178	328.7
07/23/13 23:18	4,722,752.0	1,833.0	78.7	29.34	179	328.6
07/23/13 23:19	4,733,419.0	1,833.0	78.9	29.34	182	328.7
07/23/13 23:20	4,807,739.0	1,833.0	80.1	29.36	184	329.0
07/23/13 23:21	4,842,640.0	1,833.0	80.7	29.34	183	329.5
07/23/13 23:22	4,812,435.0	1,833.0	80.2	29.34	180	329.7
07/23/13 23:23	4,812,022.0	1,833.0	80.2	29.35	178	329.7
07/23/13 23:24	4,830,221.0	1,833.0	80.5	29.35	177	329.7
07/23/13 23:25	4,830,465.0	1,833.0	80.5	29.34	181	329.8
Average	4,793,169.8	1,833.0	79.9	29.34	180	329.3
Minimum	4,722,752.0	1,833.0	78.7	29.33	177	328.6
Maximum	4,842,640.0	1,833.0	80.7	29.36	184	329.8
Summation	52,724,868.0	20,163.0	878.7	322.77	1,981	3,622.3
Included Data Points	11	11	11	11	11	11
Total number of Data Points	11	11	11	11	11	11

14

MPU03571

F = Unit Offline E = Exceedance C = Calibration S = Substituted I = Invalid
M = Maintenance T = Out Of Control * = Suspect U = Startup D = Shutdown

B9 low Flow RATA
Run 6

Average Data

Plant: Manitowoc Public Utilities
Interval: 1 Minute
Type: Roll with BAF Applied
Report Period: 07/23/2013 23:45 Through 07/23/2013 23:55
Time Online Criteria: 1 minute(s)

Source	B9					
Parameter)Unit(	B9CPFLOW (SCFH)	B9FFACT (MMBTU/CF)	B9PFLOW (KSCFM)	B9PVAC (INCHESHG)	B9STEAM (KLBS/HR)	B9STEMP (DEGFAHR)
07/23/13 23:45	4,800,818.0	1,833.0	80.0	29.34	179	329.6
07/23/13 23:46	4,811,699.0	1,833.0	80.2	29.34	179	329.5
07/23/13 23:47	4,825,952.0	1,833.0	80.4	29.36	183	329.2
07/23/13 23:48	4,820,669.0	1,833.0	80.3	29.33	180	329.3
07/23/13 23:49	4,805,287.0	1,833.0	80.1	29.33	179	329.1
07/23/13 23:50	4,798,297.0	1,833.0	80.0	29.33	180	328.6
07/23/13 23:51	4,772,070.0	1,833.0	79.5	29.33	180	328.3
07/23/13 23:52	4,775,823.0	1,833.0	79.6	29.34	181	328.3
07/23/13 23:53	4,821,805.0	1,833.0	80.4	29.33	183	328.9
07/23/13 23:54	4,839,816.0	1,833.0	80.7	29.34	183	329.5
07/23/13 23:55	4,834,474.0	1,833.0	80.6	29.33	179	329.7
Average	4,809,700.9	1,833.0	80.2	29.34	181	329.1
Minimum	4,772,070.0	1,833.0	79.5	29.33	179	328.3
Maximum	4,839,816.0	1,833.0	80.7	29.36	183	329.7
Summation	52,906,710.0	20,163.0	881.8	322.70	1,986	3,620.0
Included Data Points	11	11	11	11	11	11
Total number of Data Points	11	11	11	11	11	11

15

MPU03572

F = Unit Offline E = Exceedance C = Calibration S = Substituted I = Invalid
M = Maintenance T = Out Of Control * = Suspect U = Startup D = Shutdown

B9 low flow RATA
Run 7

Average Data

Plant: Manitowoc Public Utilities
Interval: 1 Minute
Type: Roll with BAF Applied
Report Period: 07/24/2013 00:20 Through 07/24/2013 00:30
Time Online Criteria: 1 minute(s)

Source	B9					
Parameter)Unit(	B9CPFLOW (SCFH)	B9FFACT (MMBTU/CF)	B9PFLOW (KSCFM)	B9PVAC (INCHESHG)	B9STEAM (KLBS/HR)	B9STEMP (DEGFAHR)
07/24/13 00:20	4,792,515.0	1,833.0	79.9	29.34	185	329.3
07/24/13 00:21	4,778,311.0	1,833.0	79.6	29.35	184	328.6
07/24/13 00:22	4,765,817.0	1,833.0	79.4	29.33	179	328.2
07/24/13 00:23	4,803,394.0	1,833.0	80.1	29.33	181	328.3
07/24/13 00:24	4,818,248.0	1,833.0	80.3	29.32	180	328.7
07/24/13 00:25	4,836,513.0	1,833.0	80.6	29.31	185	328.9
07/24/13 00:26	4,872,804.0	1,833.0	81.2	29.32	184	328.8
07/24/13 00:27	4,877,105.0	1,833.0	81.3	29.33	180	328.7
07/24/13 00:28	4,833,371.0	1,833.0	80.6	29.33	183	328.8
07/24/13 00:29	4,803,172.0	1,833.0	80.1	29.34	183	329.2
07/24/13 00:30	4,803,456.0	1,833.0	80.1	29.34	180	329.4
Average	4,816,791.5	1,833.0	80.3	29.33	182	328.8
Minimum	4,765,817.0	1,833.0	79.4	29.31	179	328.2
Maximum	4,877,105.0	1,833.0	81.3	29.35	185	329.4
Summation	52,984,706.0	20,163.0	883.2	322.64	2,004	3,616.9
Included Data Points	11	11	11	11	11	11
Total number of Data Points	11	11	11	11	11	11

F = Unit Offline E = Exceedance C = Calibration S = Substituted I = Invalid
M = Maintenance T = Out Of Control * = Suspect U = Startup D = Shutdown

B9 low flow RATA
Run 8

Average Data

Plant: Manitowoc Public Utilities
Interval: 1 Minute
Type: Roll with BAF Applied
Report Period: 07/24/2013 00:50 Through 07/24/2013 01:00
Time Online Criteria: 1 minute(s)

Source	B9					
Parameter)Unit(	B9CPFLOW (SCFH)	B9FFACT (MMBTU/CF)	B9PFLOW (KSCFM)	B9PVAC (INCHESHG)	B9STEAM (KLBS/HR)	B9STEMP (DEGFAHR)
07/24/13 00:50	4,829,223.0	1,833.0	80.5	29.34	177	329.2
07/24/13 00:51	4,827,158.0	1,833.0	80.5	29.34	177	329.3
07/24/13 00:52	4,790,571.0	1,833.0	79.8	29.31	182	329.4
07/24/13 00:53	4,796,964.0	1,833.0	79.9	29.32	181	329.3
07/24/13 00:54	4,813,629.0	1,833.0	80.2	29.31	183	329.1
07/24/13 00:55	4,851,113.0	1,833.0	80.9	29.32	179	329.4
07/24/13 00:56	4,864,151.0	1,833.0	81.1	29.33	177	329.2
07/24/13 00:57	4,800,249.0	1,833.0	80.0	29.32	179	328.5
07/24/13 00:58	4,734,785.0	1,833.0	78.9	29.32	181	328.0
07/24/13 00:59	4,746,641.0	1,833.0	79.1	29.31	182	328.3
07/24/13 01:00	4,791,353.0	1,833.0	79.9	29.32	181	328.7
Average	4,804,167.0	1,833.0	80.1	29.32	180	328.9
Minimum	4,734,785.0	1,833.0	78.9	29.31	177	328.0
Maximum	4,864,151.0	1,833.0	81.1	29.34	183	329.4
Summation	52,845,837.0	20,163.0	880.8	322.54	1,979	3,618.4
Included Data Points	11	11	11	11	11	11
Total number of Data Points	11	11	11	11	11	11

17

F = Unit Offline E = Exceedance C = Calibration S = Substituted I = Invalid
M = Maintenance T = Out Of Control * = Suspect U = Startup D = Shutdown

MPU03574

B9 low flow RATA
Run 9

Average Data

Plant: Manitowoc Public Utilities
Interval: 1 Minute
Type: Roll with BAF Applied
Report Period: 07/24/2013 01:20 Through 07/24/2013 01:40
Time Online Criteria: 1 minute(s)

Source	B9					
Parameter)Unit(	B9CPFLOW (SCFH)	B9FFACT (MMBTU/CF)	B9PFLOW (KSCFM)	B9PVAC (INCHESHG)	B9STEAM (KLBS/HR)	B9STEMP (DEGFAHR)
07/24/13 01:20	4,849,288.0	1,833.0	80.8	29.34	183	329.3
07/24/13 01:21	4,828,899.0	1,833.0	80.5	29.34	179	329.3
07/24/13 01:22	4,762,787.0	1,833.0	79.4	29.32	180	328.8
07/24/13 01:23	4,736,472.0	1,833.0	78.9	29.33	180	328.7
07/24/13 01:24	4,757,285.0	1,833.0	79.3	29.33	178	328.7
07/24/13 01:25	4,808,152.0	1,833.0	80.1	29.32	184	329.2
07/24/13 01:26	4,816,286.0	1,833.0	80.3	29.34	183	329.8
07/24/13 01:27	4,797,978.0	1,833.0	80.0	29.34	180	330.0
07/24/13 01:28	4,784,391.0	1,833.0	79.7	29.34	180	330.0
07/24/13 01:29	4,798,665.0	1,833.0	80.0	29.35	178	329.9
07/24/13 01:30	4,844,030.0	1,833.0	80.7	29.36	180	330.0
07/24/13 01:31	4,851,340.0	1,833.0	80.9	29.33	184	330.1
07/24/13 01:32	4,842,968.0	1,833.0	80.7	29.32	184	330.0
07/24/13 01:33	4,847,468.0	1,833.0	80.8	29.31	183	330.0
07/24/13 01:34	4,843,895.0	1,833.0	80.7	29.32	183	329.9
07/24/13 01:35	4,835,971.0	1,833.0	80.6	29.34	181	330.0
07/24/13 01:36	4,823,542.0	1,833.0	80.4	29.34	180	330.0
07/24/13 01:37	4,816,008.0	1,833.0	80.3	29.33	183	330.0
07/24/13 01:38	4,824,421.0	1,833.0	80.4	29.31	180	330.0
07/24/13 01:39	4,830,107.0	1,833.0	80.5	29.33	181	330.1
07/24/13 01:40	4,817,491.0	1,833.0	80.3	29.33	184	330.4
Average	4,815,116.4	1,833.0	80.3	29.33	181	329.7
Minimum	4,736,472.0	1,833.0	78.9	29.31	178	328.7
Maximum	4,851,340.0	1,833.0	80.9	29.36	184	330.4
Summation	101,117,444.0	38,493.0	1,685.3	615.97	3,808	6,924.2
Included Data Points	21	21	21	21	21	21
Total number of Data Points	21	21	21	21	21	21

F = Unit Offline E = Exceedance C = Calibration S = Substituted I = Invalid
M = Maintenance T = Out Of Control * = Suspect U = Startup D = Shutdown

B9 low flow RATA
Run 10

Average Data

Plant: Manitowoc Public Utilities
Interval: 1 Minute
Type: Roll with BAF Applied
Report Period: 07/24/2013 01:50 Through 07/24/2013 02:00
Time Online Criteria: 1 minute(s)

Source	B9					
Parameter)Unit(	B9CPFLOW (SCFH)	B9FFACT (MMBTU/CF)	B9PFLOW (KSCFM)	B9PVAC (INCHESHG)	B9STEAM (KLBS/HR)	B9STEMP (DEGFAHR)
07/24/13 01:50	4,760,014.0	1,833.0	79.3	29.33	180	331.0
07/24/13 01:51	4,763,648.0	1,833.0	79.4	29.32	178	331.1
07/24/13 01:52	4,818,181.0	1,833.0	80.3	29.32	179	330.9
07/24/13 01:53	4,814,613.0	1,833.0	80.2	29.32	179	330.8
07/24/13 01:54	4,825,023.0	1,833.0	80.4	29.35	179	330.8
07/24/13 01:55	4,847,882.0	1,833.0	80.8	29.33	182	330.6
07/24/13 01:56	4,843,269.0	1,833.0	80.7	29.34	179	330.7
07/24/13 01:57	4,841,036.0	1,833.0	80.7	29.31	180	330.6
07/24/13 01:58	4,817,276.0	1,833.0	80.3	29.32	180	329.9
07/24/13 01:59	4,777,782.0	1,833.0	79.6	29.31	181	329.3
07/24/13 02:00	4,760,448.0	1,833.0	79.3	29.33	183	329.6
Average	4,806,288.4	1,833.0	80.1	29.33	180	330.5
Minimum	4,760,014.0	1,833.0	79.3	29.31	178	329.3
Maximum	4,847,882.0	1,833.0	80.8	29.35	183	331.1
Summation	52,869,172.0	20,163.0	881.0	322.58	1,980	3,635.3
Included Data Points	11	11	11	11	11	11
Total number of Data Points	11	11	11	11	11	11

19

F = Unit Offline E = Exceedance C = Calibration S = Substituted I = Invalid
M = Maintenance T = Out Of Control * = Suspect U = Startup D = Shutdown

MPU03576

B9 MID FLOW
RATA
RUN #7

Average Data

Plant: Manitowoc Public Utilities
Interval: 1 Minute
Type: Roll with BAF Applied
Report Period: 07/24/2013 11:10 Through 07/24/2013 11:16
Time Online Criteria: 1 minute(s)

Source	B9					
Parameter)Unit(	B9CPFLOW (SCFH)	B9FFACT (MMBTU/CF)	B9PFLOW (KSCFM)	B9PVAC (INCHESHG)	B9STEAM (KLBS/HR)	B9STEMP (DEGFAHR)
07/24/13 11:10	6,224,078.0	1,833.0	103.7	29.50	295	336.5
07/24/13 11:11	6,217,961.0	1,833.0	103.6	29.50	296	336.3
07/24/13 11:12	6,211,544.0	1,833.0	103.5	29.49	294	336.2
07/24/13 11:13	6,213,880.0	1,833.0	103.6	29.50	297	336.1
07/24/13 11:14	6,244,841.0	1,833.0	104.1	29.50	296	335.9
07/24/13 11:15	6,271,425.0	1,833.0	104.5	29.49	297	335.9
07/24/13 11:16	6,245,196.0	1,833.0	104.1	29.49	298	335.8
Average	6,232,703.6	1,833.0	103.9	29.50	296	336.1
Minimum	6,211,544.0	1,833.0	103.5	29.49	294	335.8
Maximum	6,271,425.0	1,833.0	104.5	29.50	298	336.5
Summation	43,628,925.0	12,831.0	727.1	206.47	2,073	2,352.7
Included Data Points	7	7	7	7	7	7
Total number of Data Points	7	7	7	7	7	7

20

MPU03577

F = Unit Offline E = Exceedance C = Calibration S = Substituted I = Invalid
M = Maintenance T = Out Of Control * = Suspect U = Startup D = Shutdown

B9 MID FLOW
RATA
RUN # 2

Average Data

Plant: Manitowoc Public Utilities
Interval: 1 Minute
Type: Roll with BAF Applied
Report Period: 07/24/2013 11:17 Through 07/24/2013 11:23
Time Online Criteria: 1 minute(s)

Source	B9					
Parameter)Unit(	B9CPFLOW (SCFH)	B9FFACT (MMBTU/CF)	B9PFLOW (KSCFM)	B9PVAC (INCHESHG)	B9STEAM (KLBS/HR)	B9STEMP (DEGFAHR)
07/24/13 11:17	6,250,898.0	1,833.0	104.2	29.51	298	335.7
07/24/13 11:18	6,293,915.0	1,833.0	104.9	29.53	297	335.6
07/24/13 11:19	6,287,569.0	1,833.0	104.8	29.50	299	335.4
07/24/13 11:20	6,274,923.0	1,833.0	104.6	29.51	299	335.4
07/24/13 11:21	6,258,150.0	1,833.0	104.3	29.51	299	335.3
07/24/13 11:22	6,259,457.0	1,833.0	104.3	29.51	300	335.1
07/24/13 11:23	6,265,698.0	1,833.0	104.4	29.49	299	334.9
Average	6,270,087.1	1,833.0	104.5	29.51	299	335.3
Minimum	6,250,898.0	1,833.0	104.2	29.49	297	334.9
Maximum	6,293,915.0	1,833.0	104.9	29.53	300	335.7
Summation	43,890,610.0	12,831.0	731.5	206.56	2,091	2,347.4
Included Data Points	7	7	7	7	7	7
Total number of Data Points	7	7	7	7	7	7

21

MPU03578

F = Unit Offline E = Exceedance C = Calibration S = Substituted I = Invalid
M = Maintenance T = Out Of Control * = Suspect U = Startup D = Shutdown

B9 mid flow RATA
Run 3

Average Data

Plant: Manitowoc Public Utilities
Interval: 1 Minute
Type: Roll with BAF Applied
Report Period: 07/24/2013 11:24 Through 07/24/2013 11:30
Time Online Criteria: 1 minute(s)

Source	B9					
Parameter)Unit(	B9CPFLOW (SCFH)	B9FFACT (MMBTU/CF)	B9PFLOW (KSCFM)	B9PVAC (INCHESHG)	B9STEAM (KLBS/HR)	B9STEMP (DEGFAHR)
07/24/13 11:24	6,262,466.0	1,833.0	104.4	29.50	299	334.9
07/24/13 11:25	6,268,931.0	1,833.0	104.5	29.48	300	335.0
07/24/13 11:26	6,268,221.0	1,833.0	104.5	29.49	298	335.2
07/24/13 11:27	6,288,248.0	1,833.0	104.8	29.50	298	335.5
07/24/13 11:28	6,299,491.0	1,833.0	105.0	29.48	299	335.8
07/24/13 11:29	6,281,524.0	1,833.0	104.7	29.51	299	335.8
07/24/13 11:30	6,257,756.0	1,833.0	104.3	29.50	300	335.9
Average	6,275,233.9	1,833.0	104.6	29.49	299	335.4
Minimum	6,257,756.0	1,833.0	104.3	29.48	298	334.9
Maximum	6,299,491.0	1,833.0	105.0	29.51	300	335.9
Summation	43,926,637.0	12,831.0	732.2	206.46	2,093	2,348.1
Included Data Points	7	7	7	7	7	7
Total number of Data Points	7	7	7	7	7	7

22

MPU03579

F = Unit Offline E = Exceedance C = Calibration S = Substituted I = Invalid
M = Maintenance T = Out Of Control * = Suspect U = Startup D = Shutdown

B9 mid flow RATA
Run 4

Average Data

Plant: Manitowoc Public Utilities
Interval: 1 Minute
Type: Roll with BAF Applied
Report Period: 07/24/2013 11:40 Through 07/24/2013 11:46
Time Online Criteria: 1 minute(s)

Source	B9					
Parameter)Unit(	B9CPFLOW (SCFH)	B9FFACT (MMBTU/CF)	B9PFLOW (KSCFM)	B9PVAC (INCHESHG)	B9STEAM (KLBS/HR)	B9STEMP (DEGFAHR)
07/24/13 11:40	6,242,511.0	1,833.0	104.0	29.49	299	337.2
07/24/13 11:41	6,232,460.0	1,833.0	103.9	29.51	299	337.5
07/24/13 11:42	6,247,851.0	1,833.0	104.1	29.49	300	337.6
07/24/13 11:43	6,252,440.0	1,833.0	104.2	29.49	301	337.4
07/24/13 11:44	6,248,472.0	1,833.0	104.1	29.49	300	337.4
07/24/13 11:45	6,221,777.0	1,833.0	103.7	29.48	299	337.3
07/24/13 11:46	6,222,961.0	1,833.0	103.7	29.48	298	337.1
Average	6,238,353.1	1,833.0	104.0	29.49	299	337.4
Minimum	6,221,777.0	1,833.0	103.7	29.48	298	337.1
Maximum	6,252,440.0	1,833.0	104.2	29.51	301	337.6
Summation	43,668,472.0	12,831.0	727.7	206.43	2,096	2,361.5
Included Data Points	7	7	7	7	7	7
Total number of Data Points	7	7	7	7	7	7

23

MPU03580

F = Unit Offline E = Exceedance C = Calibration S = Substituted I = Invalid
M = Maintenance T = Out Of Control * = Suspect U = Startup D = Shutdown

B9 mid flow RATA
Run 5

Average Data

Plant: Manitowoc Public Utilities
Interval: 1 Minute
Type: Roll with BAF Applied
Report Period: 07/24/2013 11:47 Through 07/24/2013 11:53
Time Online Criteria: 1 minute(s)

Source	B9					
Parameter)Unit(	B9CPFLOW (SCFH)	B9FFACT (MMBTU/CF)	B9PFLOW (KSCFM)	B9PVAC (INCHESHG)	B9STEAM (KLBS/HR)	B9STEMP (DEGFAHR)
07/24/13 11:47	6,236,663.0	1,833.0	103.9	29.48	298	337.2
07/24/13 11:48	6,224,926.0	1,833.0	103.7	29.49	300	337.1
07/24/13 11:49	6,216,132.0	1,833.0	103.6	29.51	300	337.1
07/24/13 11:50	6,228,640.0	1,833.0	103.8	29.48	299	337.0
07/24/13 11:51	6,242,674.0	1,833.0	104.0	29.50	300	337.2
07/24/13 11:52	6,253,107.0	1,833.0	104.2	29.53	300	337.6
07/24/13 11:53	6,265,495.0	1,833.0	104.4	29.48	301	337.7
Average	6,238,233.9	1,833.0	103.9	29.50	300	337.3
Minimum	6,216,132.0	1,833.0	103.6	29.48	298	337.0
Maximum	6,265,495.0	1,833.0	104.4	29.53	301	337.7
Summation	43,667,637.0	12,831.0	727.6	206.47	2,098	2,360.9
Included Data Points	7	7	7	7	7	7
Total number of Data Points	7	7	7	7	7	7

24

F = Unit Offline E = Exceedance C = Calibration S = Substituted I = Invalid
M = Maintenance T = Out Of Control * = Suspect U = Startup D = Shutdown

MPU03581

B9 mid Flow BAT#
Run 6

Average Data

Plant: Manitowoc Public Utilities
Interval: 1 Minute
Type: Roll with BAF Applied
Report Period: 07/24/2013 11:54 Through 07/24/2013 12:00
Time Online Criteria: 1 minute(s)

Source	B9					
Parameter)Unit(	B9CPFLOW (SCFH)	B9FFACT (MMBTU/CF)	B9PFLOW (KSCFM)	B9PVAC (INCHESHG)	B9STEAM (KLBS/HR)	B9STEMP (DEGFAHR)
07/24/13 11:54	6,262,834.0	1,833.0	104.4	29.49	301	337.7
07/24/13 11:55	6,256,809.0	1,833.0	104.3	29.49	299	337.8
07/24/13 11:56	6,265,859.0	1,833.0	104.4	29.48	298	337.8
07/24/13 11:57	6,263,367.0	1,833.0	104.4	29.50	299	337.5
07/24/13 11:58	6,235,334.0	1,833.0	103.9	29.50	300	337.4
07/24/13 11:59	6,226,098.0	1,833.0	103.8	29.49	299	337.7
07/24/13 12:00	6,222,197.0	1,833.0	103.7	29.50	301	337.6
Average	6,247,499.7	1,833.0	104.1	29.49	300	337.6
Minimum	6,222,197.0	1,833.0	103.7	29.48	298	337.4
Maximum	6,265,859.0	1,833.0	104.4	29.50	301	337.8
Summation	43,732,498.0	12,831.0	728.9	206.45	2,097	2,363.5
Included Data Points	7	7	7	7	7	7
Total number of Data Points	7	7	7	7	7	7

25

MPU03582

F = Unit Offline E = Exceedance C = Calibration S = Substituted I = Invalid
M = Maintenance T = Out Of Control * = Suspect U = Startup D = Shutdown

B9 mid Flow RATA
Run 7

Average Data

Plant: Manitowoc Public Utilities
Interval: 1 Minute
Type: Roll with BAF Applied
Report Period: 07/24/2013 12:08 Through 07/24/2013 12:14
Time Online Criteria: 1 minute(s)

Source	B9					
Parameter)Unit(	B9CPFLOW (SCFH)	B9FFACT (MMBTU/CF)	B9PFLOW (KSCFM)	B9PVAC (INCHESHG)	B9STEAM (KLBS/HR)	B9STEMP (DEGFAHR)
07/24/13 12:08	6,245,984.0	1,833.0	104.1	29.48	299	338.1
07/24/13 12:09	6,244,781.0	1,833.0	104.1	29.49	299	338.1
07/24/13 12:10	6,212,159.0	1,833.0	103.5	29.48	299	338.3
07/24/13 12:11	6,212,341.0	1,833.0	103.5	29.50	299	338.6
07/24/13 12:12	6,226,779.0	1,833.0	103.8	29.47	300	338.9
07/24/13 12:13	6,230,092.0	1,833.0	103.8	29.48	300	339.0
07/24/13 12:14	6,196,893.0	1,833.0	103.3	29.49	300	339.2
Average	6,224,147.0	1,833.0	103.7	29.48	299	338.6
Minimum	6,196,893.0	1,833.0	103.3	29.47	299	338.1
Maximum	6,245,984.0	1,833.0	104.1	29.50	300	339.2
Summation	43,569,029.0	12,831.0	726.1	206.39	2,096	2,370.2
Included Data Points	7	7	7	7	7	7
Total number of Data Points	7	7	7	7	7	7

26

MPU03583

F = Unit Offline E = Exceedance C = Calibration S = Substituted I = Invalid
M = Maintenance T = Out Of Control * = Suspect U = Startup D = Shutdown

B9 mid flow RATA
Run 8

Average Data

Plant: Manitowoc Public Utilities
Interval: 1 Minute
Type: Roll with BAF Applied
Report Period: 07/24/2013 12:15 Through 07/24/2013 12:21
Time Online Criteria: 1 minute(s)

Source	B9					
Parameter)Unit(	B9CPFLOW (SCFH)	B9FFACT (MMBTU/CF)	B9PFLOW (KSCFM)	B9PVAC (INCHESHG)	B9STEAM (KLBS/HR)	B9STEMP (DEGFAHR)
07/24/13 12:15	6,185,840.0	1,833.0	103.1	29.49	300	339.4
07/24/13 12:16	6,221,782.0	1,833.0	103.7	29.48	300	339.6
07/24/13 12:17	6,232,994.0	1,833.0	103.9	29.47	299	339.7
07/24/13 12:18	6,206,990.0	1,833.0	103.4	29.49	300	339.4
07/24/13 12:19	6,189,679.0	1,833.0	103.2	29.48	299	339.2
07/24/13 12:20	6,186,154.0	1,833.0	103.1	29.47	298	339.3
07/24/13 12:21	6,206,683.0	1,833.0	103.4	29.47	298	339.3
Average	6,204,303.1	1,833.0	103.4	29.48	299	339.4
Minimum	6,185,840.0	1,833.0	103.1	29.47	298	339.2
Maximum	6,232,994.0	1,833.0	103.9	29.49	300	339.7
Summation	43,430,122.0	12,831.0	723.8	206.35	2,094	2,375.9
Included Data Points	7	7	7	7	7	7
Total number of Data Points	7	7	7	7	7	7

27

MPU03584

F = Unit Offline E = Exceedance C = Calibration S = Substituted I = Invalid
M = Maintenance T = Out Of Control * = Suspect U = Startup D = Shutdown

B9 mid flow RATA
Run 9

Average Data

Plant: Manitowoc Public Utilities
Interval: 1 Minute
Type: Roll with BAF Applied
Report Period: 07/24/2013 12:22 Through 07/24/2013 12:28
Time Online Criteria: 1 minute(s)

Source	B9					
Parameter)Unit(	B9CPFLOW (SCFH)	B9FFACT (MMBTU/CF)	B9PFLOW (KSCFM)	B9PVAC (INCHESHG)	B9STEAM (KLBS/HR)	B9STEMP (DEGFAHR)
07/24/13 12:22	6,202,504.0	1,833.0	103.4	29.47	301	339.3
07/24/13 12:23	6,159,825.0	1,833.0	102.7	29.48	302	339.1
07/24/13 12:24	6,168,480.0	1,833.0	102.8	29.49	301	338.9
07/24/13 12:25	6,211,924.0	1,833.0	103.5	29.50	300	338.9
07/24/13 12:26	6,233,211.0	1,833.0	103.9	29.51	299	339.1
07/24/13 12:27	6,233,700.0	1,833.0	103.9	29.49	300	339.0
07/24/13 12:28	6,264,939.0	1,833.0	104.4	29.46	300	339.1
Average	6,210,654.7	1,833.0	103.5	29.49	300	339.1
Minimum	6,159,825.0	1,833.0	102.7	29.46	299	338.9
Maximum	6,264,939.0	1,833.0	104.4	29.51	302	339.3
Summation	43,474,583.0	12,831.0	724.6	206.40	2,103	2,373.4
Included Data Points	7	7	7	7	7	7
Total number of Data Points	7	7	7	7	7	7

28

MPU03585

F = Unit Offline E = Exceedance C = Calibration S = Substituted I = Invalid
M = Maintenance T = Out Of Control * = Suspect U = Startup D = Shutdown

B9 mid flow RATA
Run 10

Average Data

Plant: Manitowoc Public Utilities
Interval: 1 Minute
Type: Roll with BAF Applied
Report Period: 07/24/2013 12:29 Through 07/24/2013 12:35
Time Online Criteria: 1 minute(s)

Source	B9					
Parameter)Unit(	B9CPFLOW (SCFH)	B9FFACT (MMBTU/CF)	B9PFLOW (KSCFM)	B9PVAC (INCHESHG)	B9STEAM (KLBS/HR)	B9STEMP (DEGFAHR)
07/24/13 12:29	6,272,246.0	1,833.0	104.5	29.47	301	339.4
07/24/13 12:30	6,241,045.0	1,833.0	104.0	29.45	302	339.5
07/24/13 12:31	6,202,275.0	1,833.0	103.4	29.47	301	339.3
07/24/13 12:32	6,175,868.0	1,833.0	102.9	29.48	299	339.3
07/24/13 12:33	6,189,547.0	1,833.0	103.2	29.47	300	339.4
07/24/13 12:34	6,213,531.0	1,833.0	103.6	29.49	301	339.2
07/24/13 12:35	6,207,549.2	1,833.0	103.5	29.48	299	338.9
Average	6,214,580.2	1,833.0	103.6	29.47	300	339.3
Minimum	6,175,868.0	1,833.0	102.9	29.45	299	338.9
Maximum	6,272,246.0	1,833.0	104.5	29.49	302	339.5
Summation	43,502,061.2	12,831.0	725.1	206.31	2,103	2,375.0
Included Data Points	7	7	7	7	7	7
Total number of Data Points	7	7	7	7	7	7

F = Unit Offline E = Exceedance C = Calibration S = Substituted I = Invalid
M = Maintenance T = Out Of Control * = Suspect U = Startup D = Shutdown

Report Generated: 07/24/13 12:36 Report Version 3.1.1130 STACKVISION2\reportuser 1 of 1

B9 GAS RATA
RUN #1

Average Data

Plant: Manitowoc Public Utilities
Interval: 1 Minute
Type: Roll with BAF Applied
Report Period: 07/23/2013 21:15 Through 07/23/2013 21:35
Time Online Criteria: 1 minute(s)

Source	B9								
Parameter)Unit(	B9CO#M (#/MMBTU)	B9CPCO2 (PERCENT)	B9CPNOX (PPM)	B9CPSO2 (PPM)	B9FFACT (MMBTU/CF)	B9NOX#M (#/MMBTU)	B9PCO (PPM)	B9SO2#M (#/MMBTU)	B9STEAM (KLBS/HR)
07/23/13 21:15	0.018	10.2	57.0	55.3	1,833.0	0.122	14.0	0.165	182
07/23/13 21:16	0.017	10.3	55.7	55.1	1,833.0	0.118	12.8	0.163	179
07/23/13 21:17	0.017	10.1	55.7	57.2	1,833.0	0.121	13.2	0.172	178
07/23/13 21:18	0.019	10.0	56.2	55.6	1,833.0	0.123	14.1	0.169	180
07/23/13 21:19	0.017	10.1	54.5	55.3	1,833.0	0.118	13.1	0.167	180
07/23/13 21:20	0.020	10.1	54.5	55.4	1,833.0	0.118	15.2	0.167	182
07/23/13 21:21	0.017	10.1	53.4	59.3	1,833.0	0.116	12.8	0.179	178
07/23/13 21:22	0.018	10.2	54.1	57.9	1,833.0	0.116	13.7	0.173	175
07/23/13 21:23	0.018	10.1	54.8	55.5	1,833.0	0.119	13.9	0.167	181
07/23/13 21:24	0.017	10.0	55.4	46.6	1,833.0	0.121	12.7	0.142	181
07/23/13 21:25	0.020	10.0	54.2	44.1	1,833.0	0.119	14.9	0.134	180
07/23/13 21:26	0.022	10.2	56.7	40.8	1,833.0	0.122	16.8	0.122	180
07/23/13 21:27	0.022	10.3	58.3	36.2	1,833.0	0.124	16.7	0.107	177
07/23/13 21:28	0.019	10.2	54.3	55.2	1,833.0	0.117	14.8	0.165	181
07/23/13 21:29	0.022	10.2	52.3	65.6	1,833.0	0.112	16.8	0.196	182
07/23/13 21:30	0.024	10.2	52.6	71.0	1,833.0	0.113	18.5	0.212	179
07/23/13 21:31	0.023	10.1	52.9	78.2	1,833.0	0.115	17.7	0.236	180
07/23/13 21:32	0.025	10.2	53.7	82.2	1,833.0	0.115	19.1	0.245	180
07/23/13 21:33	0.020	10.2	54.5	75.5	1,833.0	0.117	15.6	0.225	179
07/23/13 21:34	0.023	10.2	53.8	72.9	1,833.0	0.115	17.7	0.217	181
07/23/13 21:35	0.024	10.2	53.7	67.4	1,833.0	0.115	18.1	0.201	180
Average	0.020	10.2	54.7	59.2	1,833.0	0.118	15.3	0.177	180
Minimum	0.017	10.0	52.3	36.2	1,833.0	0.112	12.7	0.107	175
Maximum	0.025	10.3	58.3	82.2	1,833.0	0.124	19.1	0.245	182
Summation	0.422	213.2	1,148.3	1,242.3	38,493.0	2.476	322.2	3.724	3,775
Included Data Points	21	21	21	21	21	21	21	21	21
Total number of Data Points	21	21	21	21	21	21	21	21	21

F = Unit Offline E = Exceedance C = Calibration S = Substituted I = Invalid
M = Maintenance T = Out Of Control * = Suspect U = Startup D = Shutdown

MPU03587

B9 GAS RATA
RUN #2

Average Data

Plant: Manitowoc Public Utilities
Interval: 1 Minute
Type: Roll with BAF Applied
Report Period: 07/23/2013 21:45 Through 07/23/2013 22:05
Time Online Criteria: 1 minute(s)

Source	B9								
Parameter)Unit(	B9CO#M (#/MMBTU)	B9CPCO2 (PERCENT)	B9CPNOX (PPM)	B9CPSO2 (PPM)	B9FFACT (MMBTU/CF)	B9NOX#M (#/MMBTU)	B9PCO (PPM)	B9SO2#M (#/MMBTU)	B9STEAM (KLBS/HR)
07/23/13 21:45	0.022	10.2	55.8	64.8	1,833.0	0.120	16.4	0.193	178
07/23/13 21:46	0.020	10.2	58.1	60.2	1,833.0	0.125	15.4	0.180	178
07/23/13 21:47	0.021	10.0	59.0	59.5	1,833.0	0.129	15.4	0.181	177
07/23/13 21:48	0.022	10.0	58.7	62.2	1,833.0	0.128	16.7	0.189	178
07/23/13 21:49	0.023	10.0	59.6	67.0	1,833.0	0.130	16.9	0.204	179
07/23/13 21:50	0.024	10.0	58.3	69.3	1,833.0	0.128	17.6	0.211	177
07/23/13 21:51	0.020	10.0	57.2	73.1	1,833.0	0.125	15.3	0.222	179
07/23/13 21:52	0.022	10.0	55.9	76.2	1,833.0	0.122	16.3	0.232	177
07/23/13 21:53	0.021	10.0	56.5	72.7	1,833.0	0.124	16.1	0.221	181
07/23/13 21:54	0.022	10.1	56.7	69.8	1,833.0	0.123	16.7	0.210	181
07/23/13 21:55	0.021	10.1	56.5	77.6	1,833.0	0.122	15.7	0.234	179
07/23/13 21:56	0.021	10.1	57.2	77.0	1,833.0	0.124	16.1	0.232	178
07/23/13 21:57	0.022	9.9	57.7	71.5	1,833.0	0.128	16.3	0.220	178
07/23/13 21:58	0.018	10.1	55.1	80.2	1,833.0	0.119	13.3	0.242	178
07/23/13 21:59	0.018	10.1	55.8	81.9	1,833.0	0.121	14.0	0.247	176
07/23/13 22:00	0.019	10.2	55.7	81.8	1,833.0	0.120	14.8	0.244	181
07/23/13 22:01	0.019	10.3	55.5	83.2	1,833.0	0.118	14.4	0.246	181
07/23/13 22:02	0.017	10.2	56.3	79.0	1,833.0	0.121	13.2	0.236	178
07/23/13 22:03	0.015	10.3	57.5	75.3	1,833.0	0.122	11.8	0.222	180
07/23/13 22:04	0.015	10.3	59.3	69.7	1,833.0	0.126	11.7	0.206	184
07/23/13 22:05	0.014	10.3	64.2	53.3	1,833.0	0.136	11.1	0.157	182
Average	0.020	10.1	57.5	71.7	1,833.0	0.124	15.0	0.216	179
Minimum	0.014	9.9	55.1	53.3	1,833.0	0.118	11.1	0.157	176
Maximum	0.024	10.3	64.2	83.2	1,833.0	0.136	17.6	0.247	184
Summation	0.416	212.4	1,206.6	1,505.3	38,493.0	2.611	315.2	4.529	3,760
Included Data Points	21	21	21	21	21	21	21	21	21
Total number of Data Points	21	21	21	21	21	21	21	21	21

31

MPU03588

F = Unit Offline **E = Exceedance** **C = Calibration** **S = Substituted** **I = Invalid**
M = Maintenance **T = Out Of Control** *** = Suspect** **U = Startup** **D = Shutdown**

B9 GAS RATA
RUN #3

Average Data

Plant: Manitowoc Public Utilities
Interval: 1 Minute
Type: Roll with BAF Applied
Report Period: 07/23/2013 22:15 Through 07/23/2013 22:35
Time Online Criteria: 1 minute(s)

Source	B9								
Parameter)Unit(	B9CO#M (#/MMBTU)	B9CPCO2 (PERCENT)	B9CPNOX (PPM)	B9CPSO2 (PPM)	B9FFACT (MMBTU/CF)	B9NOX#M (#/MMBTU)	B9PCO (PPM)	B9SO2#M (#/MMBTU)	B9STEAM (KLBS/HR)
07/23/13 22:15	0.016	10.0	52.0	82.3	1,833.0	0.114	12.1	0.250	186
07/23/13 22:16	0.016	10.0	50.5	83.6	1,833.0	0.111	11.9	0.254	186
07/23/13 22:17	0.016	9.8	47.9	89.6	1,833.0	0.107	11.9	0.278	183
07/23/13 22:18	0.017	10.0	47.1	91.1	1,833.0	0.103	12.4	0.277	180
07/23/13 22:19	0.020	10.1	45.8	90.5	1,833.0	0.099	15.1	0.273	180
07/23/13 22:20	0.018	10.1	47.8	83.9	1,833.0	0.104	14.0	0.253	179
07/23/13 22:21	0.019	10.1	49.5	79.6	1,833.0	0.107	14.2	0.240	182
07/23/13 22:22	0.023	10.0	48.9	80.4	1,833.0	0.107	17.1	0.245	181
07/23/13 22:23	0.024	10.1	49.7	80.3	1,833.0	0.108	18.0	0.242	180
07/23/13 22:24	0.024	10.1	48.3	85.6	1,833.0	0.105	18.5	0.258	178
07/23/13 22:25	0.021	10.1	49.2	81.9	1,833.0	0.107	16.2	0.247	178
07/23/13 22:26	0.021	10.1	48.6	83.8	1,833.0	0.105	15.7	0.252	181
07/23/13 22:27	0.021	10.3	47.5	89.3	1,833.0	0.101	15.9	0.264	185
07/23/13 22:28	0.020	10.2	47.6	90.0	1,833.0	0.102	15.2	0.268	178
07/23/13 22:29	0.017	10.2	50.5	89.0	1,833.0	0.108	13.4	0.265	179
07/23/13 22:30	0.019	10.2	50.8	86.0	1,833.0	0.109	14.6	0.257	182
07/23/13 22:31	0.023	10.2	51.9	81.0	1,833.0	0.111	18.0	0.242	182
07/23/13 22:32	0.021	10.2	51.9	75.5	1,833.0	0.111	16.4	0.225	179
07/23/13 22:33	0.020	10.1	51.9	73.6	1,833.0	0.112	15.3	0.222	179
07/23/13 22:34	0.018	10.2	54.5	70.4	1,833.0	0.117	13.8	0.210	180
07/23/13 22:35	0.018	10.1	55.0	67.1	1,833.0	0.119	13.5	0.202	184
Average	0.020	10.1	49.9	82.6	1,833.0	0.108	14.9	0.249	181
Minimum	0.016	9.8	45.8	67.1	1,833.0	0.099	11.9	0.202	178
Maximum	0.024	10.3	55.0	91.1	1,833.0	0.119	18.5	0.278	186
Summation	0.412	212.2	1,046.9	1,734.5	38,493.0	2.267	313.2	5.224	3,802
Included Data Points	21	21	21	21	21	21	21	21	21
Total number of Data Points	21	21	21	21	21	21	21	21	21

32

MPU03589

F = Unit Offline E = Exceedance C = Calibration S = Substituted I = Invalid
M = Maintenance T = Out Of Control * = Suspect U = Startup D = Shutdown

B9 Gas RATA
Run 4

Average Data

Plant: Manitowoc Public Utilities
Interval: 1 Minute
Type: Roll with BAF Applied
Report Period: 07/23/2013 22:45 Through 07/23/2013 23:05
Time Online Criteria: 1 minute(s)

Source	B9								
Parameter)Unit(	B9CO#M (#/MMBTU)	B9CPCO2 (PERCENT)	B9CPNOX (PPM)	B9CPSO2 (PPM)	B9FFACT (MMBTU/CF)	B9NOX#M (#/MMBTU)	B9PCO (PPM)	B9SO2#M (#/MMBTU)	B9STEAM (KLBS/HR)
07/23/13 22:45	0.017	10.0	54.7	70.6	1,833.0	0.120	12.4	0.215	179
07/23/13 22:46	0.018	10.0	56.2	69.2	1,833.0	0.123	13.6	0.211	178
07/23/13 22:47	0.016	10.0	55.3	68.2	1,833.0	0.121	12.2	0.208	175
07/23/13 22:48	0.018	10.0	54.7	69.8	1,833.0	0.120	13.2	0.212	179
07/23/13 22:49	0.019	9.8	54.1	65.5	1,833.0	0.121	14.2	0.203	180
07/23/13 22:50	0.018	9.8	53.5	63.3	1,833.0	0.119	13.3	0.197	177
07/23/13 22:51	0.021	9.8	52.8	62.7	1,833.0	0.118	15.6	0.195	176
07/23/13 22:52	0.020	9.9	55.9	54.5	1,833.0	0.124	15.2	0.168	178
07/23/13 22:53	0.018	10.1	65.5	25.1	1,833.0	0.142	13.6	0.076	178
07/23/13 22:54	0.020	10.0	66.6	14.9	1,833.0	0.146	14.9	0.045	181
07/23/13 22:55	0.020	10.1	67.6	14.0	1,833.0	0.146	15.4	0.042	178
07/23/13 22:56	0.021	10.2	64.8	15.3	1,833.0	0.139	15.6	0.046	176
07/23/13 22:57	0.019	10.1	58.5	29.8	1,833.0	0.127	14.5	0.090	173
07/23/13 22:58	0.019	10.1	56.2	51.6	1,833.0	0.122	14.7	0.155	177
07/23/13 22:59	0.015	9.9	55.0	60.9	1,833.0	0.122	11.5	0.187	181
07/23/13 23:00	0.016	10.0	55.0	69.4	1,833.0	0.120	11.9	0.211	181
07/23/13 23:01	0.018	10.0	54.4	76.1	1,833.0	0.119	13.8	0.232	179
07/23/13 23:02	0.019	10.1	54.2	83.6	1,833.0	0.117	14.2	0.252	176
07/23/13 23:03	0.017	10.1	54.2	83.3	1,833.0	0.117	13.1	0.251	180
07/23/13 23:04	0.016	10.0	52.5	83.0	1,833.0	0.115	12.0	0.253	183
07/23/13 23:05	0.015	10.2	52.9	84.3	1,833.0	0.114	11.3	0.251	185
Average	0.018	10.0	56.9	57.9	1,833.0	0.124	13.6	0.176	179
Minimum	0.015	9.8	52.5	14.0	1,833.0	0.114	11.3	0.042	173
Maximum	0.021	10.2	67.6	84.3	1,833.0	0.146	15.6	0.253	185
Summation	0.380	210.2	1,194.6	1,215.1	38,493.0	2.612	286.2	3.700	3,750
Included Data Points	21	21	21	21	21	21	21	21	21
Total number of Data Points	21	21	21	21	21	21	21	21	21

33

MPU03590

F = Unit Offline E = Exceedance C = Calibration S = Substituted I = Invalid
M = Maintenance T = Out Of Control * = Suspect U = Startup D = Shutdown

B9 Gas RATA
Run 5

Average Data

Plant: Manitowoc Public Utilities
Interval: 1 Minute
Type: Roll with BAF Applied
Report Period: 07/23/2013 23:15 Through 07/23/2013 23:35
Time Online Criteria: 1 minute(s)

Source	B9								
Parameter)Unit(	B9CO#M (#/MMBTU)	B9CPCO2 (PERCENT)	B9CPNOX (PPM)	B9CPSO2 (PPM)	B9FFACT (MMBTU/CF)	B9NOX#M (#/MMBTU)	B9PCO (PPM)	B9SO2#M (#/MMBTU)	B9STEAM (KLBS/HR)
07/23/13 23:15	0.017	10.0	53.2	76.4	1,833.0	0.116	12.8	0.232	181
07/23/13 23:16	0.017	10.0	52.2	87.5	1,833.0	0.114	12.6	0.266	178
07/23/13 23:17	0.015	10.0	51.6	93.6	1,833.0	0.113	11.3	0.285	178
07/23/13 23:18	0.013	10.0	52.5	92.8	1,833.0	0.115	10.0	0.282	179
07/23/13 23:19	0.015	10.0	50.9	96.8	1,833.0	0.111	11.1	0.295	182
07/23/13 23:20	0.014	10.1	53.0	96.1	1,833.0	0.115	10.9	0.290	184
07/23/13 23:21	0.012	10.1	53.2	94.2	1,833.0	0.115	8.9	0.284	183
07/23/13 23:22	0.015	10.0	54.5	87.6	1,833.0	0.119	11.6	0.267	180
07/23/13 23:23	0.015	10.1	55.2	87.0	1,833.0	0.120	11.2	0.262	178
07/23/13 23:24	0.014	9.9	54.7	85.4	1,833.0	0.121	10.5	0.262	177
07/23/13 23:25	0.014	9.9	52.5	88.1	1,833.0	0.116	10.1	0.271	181
07/23/13 23:26	0.015	10.0	51.4	95.1	1,833.0	0.112	11.5	0.289	184
07/23/13 23:27	0.016	10.0	50.8	92.2	1,833.0	0.111	12.1	0.281	176
07/23/13 23:28	0.018	10.1	50.3	95.1	1,833.0	0.109	13.6	0.287	175
07/23/13 23:29	0.019	10.1	50.5	91.6	1,833.0	0.109	14.0	0.276	178
07/23/13 23:30	0.023	10.0	51.8	91.2	1,833.0	0.113	17.0	0.278	181
07/23/13 23:31	0.021	10.0	52.5	94.2	1,833.0	0.115	15.5	0.287	183
07/23/13 23:32	0.022	10.0	52.1	94.7	1,833.0	0.114	16.9	0.288	183
07/23/13 23:33	0.021	10.1	51.1	94.5	1,833.0	0.111	16.0	0.285	177
07/23/13 23:34	0.022	10.0	52.4	91.0	1,833.0	0.115	16.1	0.277	178
07/23/13 23:35	0.020	9.9	53.1	87.1	1,833.0	0.117	14.7	0.268	180
Average	0.017	10.0	52.4	91.1	1,833.0	0.114	12.8	0.277	180
Minimum	0.012	9.9	50.3	76.4	1,833.0	0.109	8.9	0.232	175
Maximum	0.023	10.1	55.2	96.8	1,833.0	0.121	17.0	0.295	184
Summation	0.358	210.3	1,099.5	1,912.2	38,493.0	2.401	268.4	5.812	3,776
Included Data Points	21	21	21	21	21	21	21	21	21
Total number of Data Points	21	21	21	21	21	21	21	21	21

34

MPU03591

F = Unit Offline **E = Exceedance** C = Calibration **S = Substituted** I = Invalid
M = Maintenance **T = Out Of Control** * = Suspect **U = Startup** **D = Shutdown**

B9 GAS DATA
Run 6

Average Data

Plant: Manitowoc Public Utilities
Interval: 1 Minute
Type: Roll with BAF Applied
Report Period: 07/23/2013 23:45 Through 07/24/2013 00:05
Time Online Criteria: 1 minute(s)

Source	B9								
Parameter)Unit(	B9CO#M (#/MMBTU)	B9CPCO2 (PERCENT)	B9CPNOX (PPM)	B9CPSO2 (PPM)	B9FFACT (MMBTU/CF)	B9NOX#M (#/MMBTU)	B9PCO (PPM)	B9SO2#M (#/MMBTU)	B9STEAM (KLBS/HR)
07/23/13 23:45	0.022	10.0	51.8	83.1	1,833.0	0.113	16.2	0.253	179
07/23/13 23:46	0.023	10.0	52.1	82.5	1,833.0	0.114	17.4	0.251	179
07/23/13 23:47	0.020	10.0	51.3	86.8	1,833.0	0.112	14.8	0.264	183
07/23/13 23:48	0.019	10.0	51.8	89.0	1,833.0	0.113	14.5	0.271	180
07/23/13 23:49	0.022	10.1	52.2	87.2	1,833.0	0.113	16.6	0.263	179
07/23/13 23:50	0.023	10.1	53.9	81.7	1,833.0	0.117	17.2	0.246	180
07/23/13 23:51	0.021	10.1	54.0	79.8	1,833.0	0.117	15.6	0.240	180
07/23/13 23:52	0.021	10.1	55.9	76.5	1,833.0	0.121	15.5	0.230	181
07/23/13 23:53	0.022	10.0	57.0	73.7	1,833.0	0.125	16.8	0.224	183
07/23/13 23:54	0.021	10.1	56.4	75.3	1,833.0	0.122	15.7	0.227	183
07/23/13 23:55	0.024	9.9	56.3	77.7	1,833.0	0.124	17.7	0.239	179
07/23/13 23:56	0.024	9.9	55.9	80.5	1,833.0	0.124	18.0	0.247	178
07/23/13 23:57	0.023	10.0	53.4	85.6	1,833.0	0.117	17.5	0.260	179
07/23/13 23:58	0.026	10.0	54.0	84.2	1,833.0	0.118	19.4	0.256	180
07/23/13 23:59	0.025	10.0	53.8	83.8	1,833.0	0.118	18.6	0.255	182
07/24/13 00:00	0.023	9.9	51.3	79.8	1,833.0	0.113	17.2	0.245	182
07/24/13 00:01	0.024	10.1	51.7	78.4	1,833.0	0.112	18.5	0.236	176
07/24/13 00:02	0.026	10.0	53.6	70.3	1,833.0	0.117	19.6	0.214	178
07/24/13 00:03	0.025	10.0	53.4	72.5	1,833.0	0.117	19.0	0.221	181
07/24/13 00:04	0.026	10.1	54.6	71.9	1,833.0	0.118	19.7	0.217	183
07/24/13 00:05	0.027	9.9	53.3	73.4	1,833.0	0.118	20.3	0.226	181
Average	0.023	10.0	53.7	79.7	1,833.0	0.117	17.4	0.242	180
Minimum	0.019	9.9	51.3	70.3	1,833.0	0.112	14.5	0.214	176
Maximum	0.027	10.1	57.0	89.0	1,833.0	0.125	20.3	0.271	183
Summation	0.487	210.3	1,127.7	1,673.7	38,493.0	2.463	365.8	5.085	3,786
Included Data Points	21	21	21	21	21	21	21	21	21
Total number of Data Points	21	21	21	21	21	21	21	21	21

35

MPU03592

F = Unit Offline **E = Exceedance** C = Calibration **S = Substituted** I = Invalid
M = Maintenance **T = Out Of Control** * = Suspect **U = Startup** **D = Shutdown**

B9 Gas RATA
Run 7

Average Data

Plant: Manitowoc Public Utilities
Interval: 1 Minute
Type: Roll with BAF Applied
Report Period: 07/24/2013 00:20 Through 07/24/2013 00:40
Time Online Criteria: 1 minute(s)

Source	B9								
Parameter)Unit(	B9CO#M (#/MMBTU)	B9CPCO2 (PERCENT)	B9CPNOX (PPM)	B9CPSO2 (PPM)	B9FFACT (MMBTU/CF)	B9NOX#M (#/MMBTU)	B9PCO (PPM)	B9SO2#M (#/MMBTU)	B9STEAM (KLBS/HR)
07/24/13 00:20	0.031	10.2	43.2	101.2	1,833.0	0.093	23.6	0.302	185
07/24/13 00:21	0.030	10.2	45.1	100.3	1,833.0	0.097	22.5	0.299	184
07/24/13 00:22	0.028	10.0	45.2	90.1	1,833.0	0.099	21.1	0.274	179
07/24/13 00:23	0.027	10.1	44.2	95.9	1,833.0	0.096	20.2	0.289	181
07/24/13 00:24	0.025	10.1	43.7	102.4	1,833.0	0.095	19.2	0.308	180
07/24/13 00:25	0.026	10.2	44.8	98.6	1,833.0	0.096	20.2	0.294	185
07/24/13 00:26	0.027	10.3	46.5	95.7	1,833.0	0.099	21.0	0.283	184
07/24/13 00:27	0.029	10.3	48.9	92.6	1,833.0	0.104	22.1	0.274	180
07/24/13 00:28	0.026	10.0	50.6	84.4	1,833.0	0.111	19.8	0.257	183
07/24/13 00:29	0.026	10.0	50.3	87.0	1,833.0	0.110	19.2	0.265	183
07/24/13 00:30	0.028	10.0	48.6	87.2	1,833.0	0.106	21.1	0.265	180
07/24/13 00:31	0.026	10.0	46.6	96.5	1,833.0	0.102	19.8	0.294	180
07/24/13 00:32	0.028	10.1	46.3	98.4	1,833.0	0.100	21.1	0.296	179
07/24/13 00:33	0.027	10.0	44.8	100.5	1,833.0	0.098	20.5	0.306	180
07/24/13 00:34	0.026	10.1	46.2	99.5	1,833.0	0.100	19.3	0.300	184
07/24/13 00:35	0.024	10.1	46.3	96.6	1,833.0	0.100	18.4	0.291	185
07/24/13 00:36	0.025	10.2	46.2	104.7	1,833.0	0.099	19.1	0.312	182
07/24/13 00:37	0.024	10.2	49.8	97.3	1,833.0	0.107	18.8	0.290	180
07/24/13 00:38	0.025	10.2	50.6	93.4	1,833.0	0.109	19.2	0.279	181
07/24/13 00:39	0.028	10.0	50.2	91.5	1,833.0	0.110	21.0	0.278	179
07/24/13 00:40	0.028	10.1	50.0	90.8	1,833.0	0.108	21.0	0.274	179
Average	0.027	10.1	47.1	95.5	1,833.0	0.102	20.4	0.287	182
Minimum	0.024	10.0	43.2	84.4	1,833.0	0.093	18.4	0.257	179
Maximum	0.031	10.3	50.6	104.7	1,833.0	0.111	23.6	0.312	185
Summation	0.564	212.4	988.1	2,004.6	38,493.0	2.139	428.2	6.030	3,813
Included Data Points	21	21	21	21	21	21	21	21	21
Total number of Data Points	21	21	21	21	21	21	21	21	21

36

MPU03593

F = Unit Offline E = Exceedance C = Calibration S = Substituted I = Invalid
M = Maintenance T = Out Of Control * = Suspect U = Startup D = Shutdown

B9 Gas RATA
Run 8

Average Data

Plant: Manitowoc Public Utilities
Interval: 1 Minute
Type: Roll with BAF Applied
Report Period: 07/24/2013 00:50 Through 07/24/2013 01:10
Time Online Criteria: 1 minute(s)

Source	B9								
Parameter)Unit(	B9CO#M (#/MMBTU)	B9CPCO2 (PERCENT)	B9CPNOX (PPM)	B9CPSO2 (PPM)	B9FFACT (MMBTU/CF)	B9NOX#M (#/MMBTU)	B9PCO (PPM)	B9SO2#M (#/MMBTU)	B9STEAM (KLBS/HR)
07/24/13 00:50	0.024	10.1	51.3	89.7	1,833.0	0.111	18.1	0.270	177
07/24/13 00:51	0.025	10.1	52.4	87.2	1,833.0	0.114	19.0	0.263	177
07/24/13 00:52	0.023	10.1	52.1	83.8	1,833.0	0.113	17.8	0.252	182
07/24/13 00:53	0.028	10.2	53.6	79.1	1,833.0	0.115	21.8	0.236	181
07/24/13 00:54	0.027	10.1	53.7	72.9	1,833.0	0.116	20.6	0.220	183
07/24/13 00:55	0.024	10.1	54.2	73.1	1,833.0	0.117	18.2	0.220	179
07/24/13 00:56	0.024	10.1	52.1	82.1	1,833.0	0.113	18.5	0.247	177
07/24/13 00:57	0.027	10.2	52.3	90.5	1,833.0	0.112	20.3	0.270	179
07/24/13 00:58	0.023	10.1	54.5	86.8	1,833.0	0.118	17.5	0.261	181
07/24/13 00:59	0.021	10.1	55.5	79.2	1,833.0	0.120	15.9	0.239	182
07/24/13 01:00	0.025	10.1	55.7	76.9	1,833.0	0.121	18.6	0.232	181
07/24/13 01:01	0.025	10.2	56.8	75.5	1,833.0	0.122	19.3	0.225	177
07/24/13 01:02	0.023	10.1	57.9	73.3	1,833.0	0.125	17.6	0.221	178
07/24/13 01:03	0.025	10.2	57.0	72.9	1,833.0	0.122	19.1	0.217	183
07/24/13 01:04	0.025	10.2	56.7	71.4	1,833.0	0.122	19.2	0.213	182
07/24/13 01:05	0.023	10.1	56.0	73.2	1,833.0	0.121	17.3	0.221	178
07/24/13 01:06	0.025	10.2	57.9	77.3	1,833.0	0.124	18.9	0.231	179
07/24/13 01:07	0.024	10.2	57.6	77.1	1,833.0	0.124	18.3	0.230	179
07/24/13 01:08	0.025	10.1	60.3	69.6	1,833.0	0.131	18.8	0.210	183
07/24/13 01:09	0.026	10.2	61.5	66.5	1,833.0	0.132	19.9	0.198	184
07/24/13 01:10	0.026	10.0	59.9	63.6	1,833.0	0.131	19.8	0.194	179
Average	0.025	10.1	55.7	77.2	1,833.0	0.120	18.8	0.232	180
Minimum	0.021	10.0	51.3	63.6	1,833.0	0.111	15.9	0.194	177
Maximum	0.028	10.2	61.5	90.5	1,833.0	0.132	21.8	0.270	184
Summation	0.518	212.8	1,169.0	1,621.7	38,493.0	2.524	394.5	4.870	3,781
Included Data Points	21	21	21	21	21	21	21	21	21
Total number of Data Points	21	21	21	21	21	21	21	21	21

37

MPU03594

F = Unit Offline E = Exceedance C = Calibration S = Substituted I = Invalid
M = Maintenance T = Out Of Control * = Suspect U = Startup D = Shutdown

B9 Gas RATA
Run 9

Average Data

Plant: Manitowoc Public Utilities
Interval: 1 Minute
Type: Roll
Report Period: 07/24/2013 01:20 Through 07/24/2013 01:40
Time Online Criteria: 1 minute(s)

Source	B9								
Parameter)Unit(	B9CO#M (#/MMBTU)	B9CPCO2 (PERCENT)	B9CPNOX (PPM)	B9CPSO2 (PPM)	B9FFACT (MMBTU/CF)	B9NOX#M (#/MMBTU)	B9PCO (PPM)	B9SO2#M (#/MMBTU)	B9STEAM (KLBS/HR)
07/24/13 01:20	0.026	10.2	63.7	74.6	1,833.0	0.137	19.9	0.223	183
07/24/13 01:21	0.022	10.2	63.4	68.8	1,833.0	0.136	17.1	0.205	179
07/24/13 01:22	0.023	10.1	62.5	70.4	1,833.0	0.135	17.7	0.212	180
07/24/13 01:23	0.022	10.1	64.1	68.8	1,833.0	0.139	16.8	0.207	180
07/24/13 01:24	0.019	10.1	64.8	67.9	1,833.0	0.140	14.7	0.205	178
07/24/13 01:25	0.022	10.2	64.7	68.3	1,833.0	0.139	16.7	0.204	184
07/24/13 01:26	0.025	10.1	66.2	64.7	1,833.0	0.143	18.7	0.195	183
07/24/13 01:27	0.024	10.1	67.1	57.4	1,833.0	0.145	18.4	0.173	180
07/24/13 01:28	0.024	10.1	65.5	62.5	1,833.0	0.142	18.1	0.188	180
07/24/13 01:29	0.023	10.1	65.5	69.5	1,833.0	0.142	17.3	0.209	178
07/24/13 01:30	0.025	10.2	63.3	74.6	1,833.0	0.136	19.2	0.223	180
07/24/13 01:31	0.023	10.1	63.1	72.7	1,833.0	0.137	17.3	0.219	184
07/24/13 01:32	0.023	10.2	62.8	74.3	1,833.0	0.135	17.3	0.222	184
07/24/13 01:33	0.024	10.2	62.9	77.4	1,833.0	0.135	18.1	0.231	183
07/24/13 01:34	0.023	10.2	62.6	76.6	1,833.0	0.134	17.9	0.229	183
07/24/13 01:35	0.023	10.3	64.6	75.1	1,833.0	0.137	18.0	0.222	181
07/24/13 01:36	0.023	10.1	61.1	77.3	1,833.0	0.132	17.7	0.233	180
07/24/13 01:37	0.025	10.3	65.6	77.0	1,833.0	0.139	19.0	0.227	183
07/24/13 01:38	0.024	10.2	67.6	76.2	1,833.0	0.145	18.3	0.227	180
07/24/13 01:39	0.024	10.2	70.0	71.2	1,833.0	0.150	18.3	0.212	181
07/24/13 01:40	0.023	10.1	70.4	69.5	1,833.0	0.153	17.3	0.209	184
Average	0.023	10.2	64.8	71.2	1,833.0	0.140	17.8	0.213	181
Minimum	0.019	10.1	61.1	57.4	1,833.0	0.132	14.7	0.173	178
Maximum	0.026	10.3	70.4	77.4	1,833.0	0.153	19.9	0.233	184
Summation	0.490	213.4	1,361.5	1,494.8	38,493.0	2.931	373.8	4.475	3,808
Included Data Points	21	21	21	21	21	21	21	21	21
Total number of Data Points	21	21	21	21	21	21	21	21	21

38

MPU03595

F = Unit Offline E = Exceedance C = Calibration S = Substituted I = Invalid
M = Maintenance T = Out Of Control * = Suspect U = Startup D = Shutdown

B9 Gas RATA
Run 10

Average Data

Plant: Manitowoc Public Utilities
Interval: 1 Minute
Type: Roll
Report Period: 07/24/2013 01:50 Through 07/24/2013 02:10
Time Online Criteria: 1 minute(s)

Source	B9								
Parameter)Unit(	B9CO#M (#/MMBTU)	B9CPCO2 (PERCENT)	B9CPNOX (PPM)	B9CPSO2 (PPM)	B9FFACT (MMBTU/CF)	B9NOX#M (#/MMBTU)	B9PCO (PPM)	B9SO2#M (#/MMBTU)	B9STEAM (KLBS/HR)
07/24/13 01:50	0.025	10.0	65.9	77.7	1,833.0	0.144	18.3	0.236	180
07/24/13 01:51	0.024	10.0	65.3	78.4	1,833.0	0.143	17.9	0.239	178
07/24/13 01:52	0.024	10.0	65.7	73.7	1,833.0	0.144	18.4	0.224	179
07/24/13 01:53	0.021	10.0	65.9	73.4	1,833.0	0.144	15.7	0.223	179
07/24/13 01:54	0.023	10.0	65.7	75.5	1,833.0	0.144	17.4	0.230	179
07/24/13 01:55	0.024	10.0	65.9	70.3	1,833.0	0.144	18.0	0.214	182
07/24/13 01:56	0.024	10.1	65.6	67.7	1,833.0	0.142	17.9	0.204	179
07/24/13 01:57	0.026	10.0	66.3	63.7	1,833.0	0.145	19.1	0.194	180
07/24/13 01:58	0.025	10.0	67.3	63.9	1,833.0	0.147	18.9	0.194	180
07/24/13 01:59	0.023	10.1	66.1	67.9	1,833.0	0.143	17.4	0.205	181
07/24/13 02:00	0.025	10.1	66.0	65.9	1,833.0	0.143	18.6	0.199	183
07/24/13 02:01	0.024	10.2	67.1	67.0	1,833.0	0.144	18.3	0.200	181
07/24/13 02:02	0.024	10.0	66.2	67.9	1,833.0	0.145	17.8	0.207	177
07/24/13 02:03	0.024	10.2	67.9	68.9	1,833.0	0.146	18.5	0.206	179
07/24/13 02:04	0.024	10.1	68.9	70.0	1,833.0	0.149	18.5	0.211	182
07/24/13 02:05	0.026	10.1	67.6	74.8	1,833.0	0.146	19.6	0.225	182
07/24/13 02:06	0.023	10.1	69.1	74.8	1,833.0	0.150	17.8	0.225	183
07/24/13 02:07	0.024	10.0	65.7	75.8	1,833.0	0.144	18.3	0.231	183
07/24/13 02:08	0.023	10.1	65.6	72.8	1,833.0	0.142	17.5	0.219	181
07/24/13 02:09	0.025	10.2	64.9	74.7	1,833.0	0.139	19.2	0.223	181
07/24/13 02:10	0.024	10.2	66.3	72.4	1,833.0	0.142	18.1	0.216	181
Average	0.024	10.1	66.4	71.3	1,833.0	0.144	18.2	0.215	180
Minimum	0.021	10.0	64.9	63.7	1,833.0	0.139	15.7	0.194	177
Maximum	0.026	10.2	69.1	78.4	1,833.0	0.150	19.6	0.239	183
Summation	0.505	211.5	1,395.0	1,497.2	38,493.0	3.030	381.2	4.525	3,790
Included Data Points	21	21	21	21	21	21	21	21	21
Total number of Data Points	21	21	21	21	21	21	21	21	21

39

MPU03596

F = Unit Offline E = Exceedance C = Calibration S = Substituted I = Invalid
M = Maintenance T = Out Of Control * = Suspect U = Startup D = Shutdown

APPENDIX I

PROCEDURES

Please Note: In an effort to conserve paper, the procedure section of the appendix has been reserved for explanations of EPA methodology deviations. Please refer to the specific EPA Methods on the following EPA website: http://www.epa.gov/ttn/emc/

APPENDIX J

CALCULATION EQUATIONS

MSI/ Manitowoc PU
Test 2N Run 1
Sample Calculations

LB/mmBtu

Calculator			*Equations - CFR 40, Part 60,Method 19*
SO2 : Calculator			**SO2 : Equations**
	SO2 ppm,w =	55.4	*19-7* Using the wet SO2 and CO2 numbers.
	CO2 %,w =	10	Fc * 0.000000002595 * 64 *100 * SO2 ppm (wet) /CO2 % (wet)
	F-factor (Fc) =	1877	
	lb/million Btu =	0.172699617	
NOx : Calculator			**NOx : Equations**
	NOx ppm,w =	57.4	*19-7* Using wet NOx and CO2 numbers:
	CO2 %,w =	10	Fc * 0.000000002595 * 46 * 100 * NOx ppm (wet)/ CO2 % (wet)
	F-factor (Fc) =	1877	
	lb/million Btu =	0.128608999	
CO :			**CO :**
	CO ppm,w =	13.3	*19-7* Using the CO and CO2 wet numbers:
	CO2 %,w =	10	Fc * 0.000000002595 * 28 * 100 * CO ppm (wet)/ CO2 % (wet)
	F-factor (Fc) =	1877	
	lb/million Btu =	0.018138915	

MPU03599

$$S_d = \left[\frac{\sum_{i=1}^{n} d_i^2 - \frac{\left[\sum_{i=1}^{n} d_i\right]^2}{n}}{n-1} \right]^{\frac{1}{2}} \qquad Eq.\ 2\text{-}4$$

12.4 Confidence Coefficient. Calculate the 2.5 percent error confidence coefficient (one-tailed), CC, as follows:

$$CC = t_{0.975} \frac{S_d}{\sqrt{n}} \qquad Eq.\ 2\text{-}5$$

Where:

$t_{0.975}$=t-value (see Table 2–1).

12.5 Relative Accuracy. Calculate the RA of a set of data as follows:

$$RA = \frac{\left[\left|\bar{d}\right| + \left|CC\right|\right]}{\overline{RM}} \times 100 \qquad Eq.\ 2\text{-}6$$

Where:

|d|=Absolute value of the mean differences (from Equation 2–3).

|CC|=Absolute value of the confidence coefficient (from Equation 2–3).

RM=Average RM value. In cases where the average emissions for the test are less than 50 percent of the applicable standard, substitute the emission standard value in the denominator of Eq. 2–6 in place ofRM. In all other cases, useRM.

13.0 Method Performance

13.1 Calibration Drift Performance Specification. The CEMS calibration must not drift or deviate from the reference value of the gas cylinder, gas cell, or optical filter by more than 2.5 percent of the span value. If the CEMS includes pollutant and diluent monitors, the CD must be determined separately for each in terms of concentrations (See Performance Specification 3 for the diluent specifications), and none of the CDs may exceed the specification.

13.2 Relative Accuracy Performance Specification. The RA of the CEMS must be no greater than 20 percent when RMis used in the denominator of Eq. 2–6 (average emissions during test are greater than 50 percent of the emission standard) or 10 percent when the applicable emission standard is used in the denominator of Eq. 2–6 (average emissions during test are less than 50 percent of the emission standard). For SO_2emission standards of 130 to and including 86 ng/J (0.30 and 0.20 lb/million Btu), inclusive, use 15 percent of the applicable standard; below 86 ng/J (0.20 lb/million Btu), use 20 percent of the emission standard.

MPU03600

APPENDIX K

AETB REQUIREMENTS

Interpoll Laboratories, Inc.
4500 Ball Road NE
Circle Pines, MN 55014-1819
Tel: 763-786-6020
Fax: 763-786-7854
www.interpoll-labs.com

August 19, 2013

Manitowoc Public Utilities
Thomas E. Reed
1303 South 8th Street
P.O. Box 1090
Manitowoc, WI 54221-1090

Re: Part 75 Air Emission Testing Body Requirements

Mr. Reed

This letter addresses the requirements of 40 CFR Part 75. Specifically; effective March 27, 2012, 40 CFR Part 75 test programs must be conducted by an Air Emissions Testing Body (AETB) in accordance with the requirements set forth in ASTM D 7036-04, Standard Practice for Competent Air Emission Testing Body.

Consistent with Section 6.2.1(c), Appendix A, 40 CFR Part 75, the AETB shall provide to each customer a certification that the AETB operates in conformance with, and that data has been collected in accordance with, the requirements of ASTM D 7036-04.

This letter serves as certification that Interpoll Laboratories, Inc. does provide data and services which comply with the above requirements.

Regards,

Daniel Despen
President
Interpoll Laboratories, Inc.

Stack Vision Entry Requirements

Required AETB Data Per Part 75

Field	Entry	Description
QI Last Name	Aaron	Required-Qualified Individual's last name
QI First Name	Wilson	Required-Qualified Individual's first name
QI Middle Initial	M.	Required-Qualified Individual's middle initial
AETB Name	Interpoll Laboratories, Inc.	Required-The AETB company whom the Qualified Individual represents.
AETB Phone Number	763-786-6020	Required-AETB company phone number.
AETB Email	stack@interpoll-labs.com	Required-AETB company email address or the email address of the qualified individual.
Exam Date	1/13/2012	Required-Date the Qualified Individual completed the AETB exam that certifies this person to conduct RATA tests.
Exam Provider Name	Source Evaluation Society	Required-Name of the agency who provided the exam
Exam Provider Email	qstiprogram@gmail.com	Required-Email address for the agency who provided the exam.
Comment		Optional field for additional comments.

Note-Interpoll Laboratories will be providing a letter of certification signed by a member of the senior management staff of the AETB for the clients records.

MPU03603