Interpoll Laboratories, Inc.
4500 Ball Road N.E.
Circle Pines, Minnesota 55014-1819

TEL: (763) 786-6020
FAX: (763) 786-7854

RESULTS OF THE JULY 23, 2013 RELATIVE ACCURACY TEST AUDIT OF THE $CO/SO_2/NO_x/CO_2$/FLOW CEM SYSTEM INSTALLED ON THE S20 STACK AT THE MANITOWOC PUBLIC UTILITIES FACILITY IN MANITOWOC, WISCONSIN

Submitted to:

Mechanical Systems Inc.
480 Progress Way
Sun Prairie, WI 53590

Attention:

Rocky Orzechowski

Reviewed by:

Kathleen Eickstadt
Coordinator
Source Testing

Report Number 13-32333 (S20)
August 19, 2013
DVH

TABLE OF CONTENTS

ABBREVIATIONS iii

1 INTRODUCTION 1

2 SUMMARY AND DISCUSSION 3

APPENDICES:

A - Sampling Train Calibration Data
B - Reference Computer Printouts
C - Field Data Sheets
D - Measurement System Performance Specifications
E - Calibration Gas Certification Sheets
F - Gas Analyzer Specifications
G - CEM Instrument Information Sheets
H - CEM Data
I - Procedures
J - Calculation Equations
K - AETB Requirements

ABBREVIATIONS

ACFM	actual cubic feet per minute
cc (ml)	cubic centimeter (milliliter)
DSCFM	dry standard cubic foot of dry gas per minute
DSML	dry standard milliliter
DEG-F (°F)	degrees Fahrenheit
DIA.	Diameter
FT/SEC	feet per second
g	gram
GPM	gallons per minute
GR/ACF	grains per actual cubic foot
GR/DSCF	grains per dry standard cubic foot
g/dscm	grams per dry standard meter
HP	horsepower
HRS	hours
IN.	inches
IN.HG.	inches of mercury
IN.WC.	inches of water
LB	pound
LB/DSCF	pounds per dry standard cubic foot
LB/HR	pounds per hour
LB/10^6BTU	pounds per million British Thermal Units heat input
LB/MMBTU	pounds per million British Thermal Units heat input
MW	megawatt
mg/dscm	milligrams per dry standard cubic meter
ug/dscm	micrograms per dry standard cubic meter
microns (um)	micrometer
MIN.	minutes
ng	nanograms
PM	particulate matter
PPH	pounds per hour
PPM	parts per million
ppmC	parts per million carbon
ppm,d	parts per million, dry
ppm,w	parts per million, wet
ppt	parts per trillion
PSI	pounds per square inch
SQ.FT.	square feet
TPD	tons per day
ug	micrograms
v/v	percent by volume
w/w	percent by weight

Standard conditions are defined as 68 °F (20 °C) and 29.92 IN. of mercury pressure

1 INTRODUCTION

On July 23, 2013, Interpoll Laboratories personnel conducted a Title 40, Part 75, $CO/SO_2/NO_x/CO_2$ and Flow Relative Accuracy Test Audit of the CEM System installed on the S20 Stack at the Manitowoc Public Utilities Facility in Manitowoc, Wisconsin. The following CEMs were tested:

Monitor Type	Manufacturer	Model	Serial No.	Location
NO_x	TECO	42i-d	0908635558	S20 Stack
SO_2	TECO	43i	0908635559	S20 Stack
CO_2	TECO	41i	0811429266	S20 Stack
CO	TECO	48i	08270019	S20 Stack
Flow	United Sciences	150	1500877	S20 Stack

On-site testing was performed by Aaron Wilson and Nate Beinemann. Jim Fanning of Mechanical Systems, Inc. and Tim Harding of Manitowoc Public Utilities provided coordination between testing activities and plant operation. A representative of the Wisconsin DNR did not witness testing.

Carbon Monoxide, Sulfur Dioxide, Oxides of Nitrogen, and Carbon Dioxide evaluations were performed in accordance with EPA Methods 10, 3A, 6C, and 7E CFR Title 40, Part 60, Appendix A and Part 75. For oxygen analysis, a slipstream of sample gas was withdrawn from the exhaust gas stream using test ports (provided by the plant) on the stack adjacent to the CEMS using a heat-traced probe and filter assembly. After passing through the filter, the gas passed through two condenser-type moisture removal systems operating in series. The particulate-free dry gas was then transported to the oxygen analyzer with the excess exhausted to the atmosphere through a calibrated orifice, which was used to ensure that the flow from the stack exceeds the requirements of the analyzer. For SO_2, NO_x, CO and CO_2 analysis, a dilution probe based system was used. In this system a slipstream of exhaust gas is drawn from the exhaust gas stream using an M&C dilution probe. The sample stream is filtered and diluted (approximate dilution during these tests was 100:1) before delivery to the SO_2, NO_x, CO and CO_2 analyzers.

The test runs were performed by moving the sample probe through a three-point traverse (1/6, 3/6, 5/6 of the duct depth). The instruments were calibrated before and after the runs as per EPA Methods 3A,

MPU03270

6C, and 7E using EPA Protocol 1 gases.

The reference method CO_2, SO_2, CO and NO_x concentrations were recorded using a computer datalogger. Copies of the computer printouts are included in this report.

Moisture determinations were performed psychometrically. Volumetric flow rate determinations were determined with a Type S pitot tube using EPA Method 2 and applying the default wall adjustment factor of 0.9900 for a brick lined stack according to Method 2H, section 2.2.2. Flow measurements were conducted from four test ports oriented at ninety degrees on the stack using a 16-point traverse. The flow rate monitor was certified at low and mid load conditions.

The results of the CEM Relative Accuracy Test Audit are summarized in Section 2. Field data and all other supporting information are presented in the appendices.

MPU03271

2 SUMMARY AND DISCUSSION

The results of the Relative Accuracy Test Audit are summarized in the following tables. An overview of the results is presented below:

S20 STACK RELATIVE ACCURACY RESULTS

Parameter	Units	Measured
NO_x	LB/10^6BTU	2.61
NO_x	ppm,w	2.98
SO_2	ppm,w	5.11
SO_2	LB/10^6BTU	6.37
CO_2	% v/v,w	1.86
CO	ppm,w	2.23
CO	LB/10^6BTU	3.53
Flow (LOW)	SCFH	3.12
Flow (HIGH)	SCFH	4.29

No difficulties were encountered in the field or in the evaluation of the data. On the basis of these facts and a complete review of the data and results, it is our opinion that the CO_2, SO_2 and NO_x concentrations reported herein are accurate and closely reflect the actual values, which existed at the time the test was performed.

MPU03272

Summary of the Results of the July 23,2013, Relative Accuracy Test Audit of the NOx Analyzer Installed on the S20 Boiler Stack at the Manitowoc Public Utilities Plant located in Manitowoc, Wisconsin.

Low "Normal" Load (80 Klbs/Hr)

				Nox Lbs/mmBTU		
Run		**Date**	**Time**	**RM**	**CEM**	**DIFF.**
1		07/23/13	14:50 - 15:10	0.100	0.098	0.002
2		07/23/13	15:20 - 15:40	0.098	0.097	0.001
3		07/23/13	15:50 - 16:10	0.090	0.091	-0.001
4		07/23/13	16:20 - 16:40	0.088	0.090	-0.002
5		07/23/13	16:50 - 17:10	0.087	0.089	-0.002
6	*	07/23/13	17:20 - 17:40	0.085	0.088	-0.003
7		07/23/13	17:50 - 18:10	0.085	0.087	-0.002
8		07/23/13	18:20 - 18:40	0.087	0.088	-0.001
9		07/23/13	18:50 - 19:10	0.088	0.090	-0.002
10		07/23/13	19:20 - 19:40	0.088	0.091	-0.003
Average Diff.				0.090	0.091	-0.001111
Standard Deviation						0.002
Confidence Coefficient						0.001242
Relative Accuracy						2.61
Bias Test						Pass
Bias Adjustment Factor						0.988

* Run was not used in Relative Accuracy calculation

RM = Reference Method

CEM = Continuous Emission Monitor

Summary of the Results of the July 23,2013, Relative Accuracy Test Audit of the NOx Analyzer Installed on the S20 Boiler Stack at the Manitowoc Public Utilities Plant located in Manitowoc, Wisconsin.

Low "Normal" Load (80 Klbs/Hr)

				Nox ppm, wet		
Run		**Date**	**Time**	**RM**	**CEM**	**DIFF.**
1		07/23/13	14:50 - 15:10	21.7	22.0	-0.3
2		07/23/13	15:20 - 15:40	21.2	21.7	-0.5
3		07/23/13	15:50 - 16:10	20.2	20.7	-0.5
4		07/23/13	16:20 - 16:40	19.9	20.5	-0.6
5		07/23/13	16:50 - 17:10	19.6	20.3	-0.7
6	*	07/23/13	17:20 - 17:40	19.6	20.3	-0.7
7		07/23/13	17:50 - 18:10	19.6	20.2	-0.6
8		07/23/13	18:20 - 18:40	19.9	20.4	-0.5
9		07/23/13	18:50 - 19:10	20.3	20.8	-0.5
10		07/23/13	19:20 - 19:40	20.4	20.9	-0.5
Average Diff.				20.311	20.833	-0.522
Standard Deviation						0.109
Confidence Coefficient						0.084008
Relative Accuracy						2.98
Bias Test						Pass
Bias Adjustment Factor						0.975

* Run was not used in Relative Accuracy calculation

RM = Reference Method

CEM = Continuous Emission Monitor

Summary of the Results of the July 23,2013, Relative Accuracy Test Audit of the SO2 Analyzer Installed on the S20 Boiler Stack at the Manitowoc Public Utilities Plant located in Manitowoc, Wisconsin.

Low "Normal" Load (80 Klbs/Hr)

				SO_2 ppm, wet		
Run		**Date**	**Time**	**RM**	**CEM**	**DIFF.**
1		07/23/13	14:50 - 15:10	43.7	42.2	1.5
2	*	07/23/13	15:20 - 15:40	42.2	38.2	4.0
3		07/23/13	15:50 - 16:10	44.1	41.1	3.0
4		07/23/13	16:20 - 16:40	40.8	39.3	1.5
5		07/23/13	16:50 - 17:10	40.2	40.2	0.0
6		07/23/13	17:20 - 17:40	40.6	39.5	1.1
7		07/23/13	17:50 - 18:10	42.4	39.9	2.5
8		07/23/13	18:20 - 18:40	42.3	40.3	2.0
9		07/23/13	18:50 - 19:10	42.3	42.2	0.1
10		07/23/13	19:20 - 19:40	42.4	42.2	0.2
Average Diff.				42.089	40.767	1.322222
Standard Deviation						1.077
Confidence Coefficient						0.827681
Relative Accuracy						5.11
Bias Test						Fail
Bias Adjustment Factor						1.032

* Run was not used in Relative Accuracy calculation

RM = Reference Method

CEM = Continuous Emission Monitor

Summary of the Results of the July 23,2013, Relative Accuracy Test Audit of the SO2 Analyzer Installed on the S20 Boiler Stack at the Manitowoc Public Utilities Plant located in Manitowoc, Wisconsin.

Low "Normal" Load (80 Klbs/Hr)

				SO_2 Lbs/mmBTU		
Run		**Date**	**Time**	**RM**	**CEM**	**DIFF.**
1		07/23/13	14:50 - 15:10	0.280	0.262	0.018
2	*	07/23/13	15:20 - 15:40	0.270	0.239	0.031
3		07/23/13	15:50 - 16:10	0.274	0.252	0.022
4		07/23/13	16:20 - 16:40	0.249	0.241	0.008
5		07/23/13	16:50 - 17:10	0.249	0.246	0.003
6		07/23/13	17:20 - 17:40	0.244	0.239	0.005
7		07/23/13	17:50 - 18:10	0.256	0.239	0.017
8		07/23/13	18:20 - 18:40	0.258	0.242	0.016
9		07/23/13	18:50 - 19:10	0.256	0.253	0.003
10		07/23/13	19:20 - 19:40	0.254	0.254	0.000
Average Diff.				0.258	0.248	0.010222
Standard Deviation						0.008
Confidence Coefficient						0.006195
Relative Accuracy						6.37
Bias Test						Fail
Bias Adjustment Factor						1.041

* Run was not used in Relative Accuracy calculation

RM = Reference Method

CEM = Continuous Emission Monitor

Summary of the Results of the July 23,2013, Relative Accuracy Test Audit on the CO2 Analyzer Installed on the S20 Boiler Stack at the Manitowoc Public Utilities Plant located in Manitowoc, Wisconsin.

Low "Normal" Load (80 Klbs/Hr)

						CO_2, wet Summary		
Run		**Date**	**Time**			**RM**	**CEM**	**DIFF.**
1	*	07/23/13	14:50	-	15:10	4.9	5.0	-0.1
2		07/23/13	15:20	-	15:40	4.9	5.0	-0.1
3		07/23/13	15:50	-	16:10	5.0	5.1	-0.1
4		07/23/13	16:20	-	16:40	5.1	5.1	0.0
5		07/23/13	16:50	-	17:10	5.0	5.1	-0.1
6		07/23/13	17:20	-	17:40	5.2	5.1	0.1
7		07/23/13	17:50	-	18:10	5.2	5.2	0.0
8		07/23/13	18:20	-	18:40	5.1	5.2	-0.1
9		07/23/13	18:50	-	19:10	5.2	5.2	0.0
10		07/23/13	19:20	-	19:40	5.2	5.2	0.0
Average Difference						5.088	5.125	-0.03750
Standard Deviation								0.074
Confidence Coefficient								0.057191
Relative Accuracy								1.86
Bias Test								Pass
Bias Adjustment Factor								0.993

* Run was not used in Relative Accuracy calculation

RM = Reference Method

CEM = Continuous Emission Monitor

Summary of the Results of the July 23,2013, Relative Accuracy Test Audit of the CO Analyzer Installed on the S20 Boiler Stack at the Manitowoc Public Utilities Plant located in Manitowoc, Wisconsin.

Low "Normal" Load (80 Klbs/Hr)

				CO ppm, wet		
Run		**Date**	**Time**	**RM**	**CEM**	**DIFF.**
1		07/23/13	14:50 - 15:10	38.7	39.1	-0.4
2		07/23/13	15:20 - 15:40	38.0	36.9	1.1
3	*	07/23/13	15:50 - 16:10	40.5	38.1	2.4
4		07/23/13	16:20 - 16:40	37.8	35.9	1.9
5		07/23/13	16:50 - 17:10	36.1	36.3	-0.2
6		07/23/13	17:20 - 17:40	36.4	37.5	-1.1
7		07/23/13	17:50 - 18:10	37.3	37.5	-0.2
8		07/23/13	18:20 - 18:40	36.4	36.4	0.0
9		07/23/13	18:50 - 19:10	35.8	35.7	0.1
10		07/23/13	19:20 - 19:40	36.8	36.6	0.2
Average Diff.				37.033	36.878	0.155556
Standard Deviation						0.873
Confidence Coefficient						0.671332
Relative Accuracy						2.23
Bias Test						Pass
Bias Adjustment Factor						1.004

* Run was not used in Relative Accuracy calculation

RM = Reference Method

CEM = Continuous Emission Monitor

Summary of the Results of the July 23,2013, Relative Accuracy Test Audit of the CO Analyzer Installed on the S20 Boiler Stack at the Manitowoc Public Utilities Plant located in Manitowoc, Wisconsin.

Low "Normal" Load (80 Klbs/Hr)

				CO Lbs/mmBTU		
Run		**Date**	**Time**	**RM**	**CEM**	**DIFF.**
1		07/23/13	14:50 - 15:10	0.108	0.106	0.002
2		07/23/13	15:20 - 15:40	0.107	0.101	0.006
3	*	07/23/13	15:50 - 16:10	0.110	0.102	0.008
4		07/23/13	16:20 - 16:40	0.101	0.096	0.005
5		07/23/13	16:50 - 17:10	0.098	0.097	0.001
6		07/23/13	17:20 - 17:40	0.096	0.100	-0.004
7		07/23/13	17:50 - 18:10	0.098	0.099	-0.001
8		07/23/13	18:20 - 18:40	0.097	0.096	0.001
9		07/23/13	18:50 - 19:10	0.095	0.094	0.001
10		07/23/13	19:20 - 19:40	0.097	0.097	0.000
Average Diff.				0.100	0.098	0.001222
Standard Deviation						0.003
Confidence Coefficient						0.002299
Relative Accuracy						3.53
Bias Test						Pass
Bias Adjustment Factor						1.012

* Run was not used in Relative Accuracy calculation

RM = Reference Method

CEM = Continuous Emission Monitor

Results of the July 23, 2013 Relative Accuracy Test Audit
of the Flow Analyzer Installed on the S20 Boiler Stack at the
Manitowoc Public Utilities Plant located in Manitowoc, Wisconsin.

Low Load (80 Klbs/Hr)

				Flow (SCFH)		
Run		**Date**	**Time**	**RM**	**CEM**	**DIFF.**
1		07/23/13	5:15 - 5:25	3,743,000	3,560,000	183,000
2		07/23/13	6:20 - 6:30	3,720,000	3,580,000	140,000
3	*	07/23/13	6:31 - 6:38	3,723,000	3,495,000	228,000
4		07/23/13	6:39 - 6:46	3,537,000	3,640,000	-103,000
5		07/23/13	7:02 - 7:10	3,711,000	3,660,000	51,000
6		07/23/13	7:11 - 7:16	3,679,000	3,535,000	144,000
7		07/23/13	7:17 - 7:24	3,706,000	3,729,000	-23,000
8		07/23/13	7:42 - 7:49	3,600,000	3,678,000	-78,000
9		07/23/13	7:50 - 7:57	3,622,000	3,583,000	39,000
10		07/23/13	7:58 - 8:06	3,653,000	3,700,000	-47,000
Average Diff.				3663444.444	3629444.444	34000.000
Confidence Coefficient						80147.093371
Standard Deviation						104267.684
Relative Accuracy						3.12
Bias Test						Pass
Bias Adjustment Factor						1.009

* Run was not used in Relative Accuracy calculation

RM = Reference Method

CEM = Continuous Emission Monitor

Results of the July 23, 2012 Relative Accuracy Test Audit
of the Flow Analyzer Installed on the S20 Boiler Stack at the
Manitowoc Public Utilities Plant located in Manitowoc, Wisconsin.

High Load (190 Klbs/Hr)

			Flow (SCFH)		
Run	**Date**	**Time**	**RM**	**CEM**	**DIFF.**
1	07/23/13	10:40 - 10:46	4,724,000	4,889,000	-165,000
2	07/23/13	10:47 - 10:53	4,760,000	4,973,000	-213,000
3	07/23/13	10:54 - 11:00	4,775,000	4,916,000	-141,000
4	07/23/13	11:30 - 11:36	4,711,000	4,929,000	-218,000
5	07/23/13	11:37 - 11:43	4,819,000	4,950,000	-131,000
6	* 07/23/13	11:44 - 11:50	4,696,000	4,952,000	-256,000
7	07/23/13	11:51 - 11:57	4,815,000	4,935,000	-120,000
8	07/23/13	11:58 - 12:04	4,857,000	5,015,000	-158,000
9	07/23/13	12:05 - 12:11	4,830,000	4,938,000	-108,000
10	07/23/13	12:12 - 12:18	4,786,000	5,038,000	-252,000
Average Diff.			4786333.333	4953666.667	-167333.333
Confidence Coefficient					38132.374982
Standard Deviation					49608.467
Relative Accuracy					4.29
Bias Test					Pass
Bias Adjustment Factor					0.966

* Run was not used in Relative Accuracy calculation

RM = Reference Method

CEM = Continuous Emission Monitor

APPENDIX A

SAMPLING TRAIN CALIBRATION DATA

INTERPOLL LABORATORIES, INC.
(763) 786-6020

Temperature Measurement Device Calibration Sheet

Unit under Test:

Vendor	Cen Tech	Serial Number	6048682
Model	92242	Thermocouple Type	Type K
Range	0-2000	Technician	Mike Bonham
Date of Calibration	8/2/2012	PDT Number	138

Method of Calibration:

Omega Model CL-300 Type K Thermocouple Simulator which provides 22 precise temperature equivalent millivolt signals. The CL-300 is cold junction compensated. Calibration accuracy is +/- 0.1 % of span(2100 oF) +/- 1 degree (for negative temperatures add +/- 2 degrees). The CL-300 simulated exactly the millivoltage of a Type K thermocouple at the indicated temperature.

Desired Temp. (°F) Nominal	Response of Unit Under Test (°F)	Deviation	
		Δt (°F)	%
0	9	9	1.919
100	103	3	0.533
200	210	10	1.493
300	304	4	0.524
400	405	5	0.578
500	501	1	0.104
600	605	5	0.469
700	700	0	0.000
800	804	4	0.316
900	901	1	0.073
1000	1006	6	0.409
1100	1103	3	0.192
1200	1204	4	0.240
1300	1301	1	0.057
1400	1404	4	0.215
1500	1503	3	0.153
1600	1604	4	0.194
1700	1700	0	0.000
1800	1800	0	0.000
1900	1901	1	0.042
2000	2000	0	0.000
2100			
	Average:	**3.24**	**0.3577**

OF = off scale response by unit under test (oF)

% dev = 100Δt/(460+t)

☐ **Unit was in tolerance**

(Must be within +/- 1.5% absolute reference temperature)

☐ **Unit was not in tolerance : Recalibrated see new calibration sheet or unit put out of service.**

MPU03283

INTERPOLL LABORATORIES, INC.
(763) 786-6020

Temperature Measurement Device Calibration Sheet

Unit under Test:

Vendor	Omega	Serial Number	201108
Model	hh-81	Thermocouple Type	Type K
Range	0-2100 °F	Technician	D Van Hoever
Date of Calibration	4/5/2013	PDT Number	85

Method of Calibration:

Omega Model CL-300 Type K Thermocouple Simulator which provides 22 precise temperature equivalent millivolt signals. The CL-300 is cold junction compensated. Calibration accuracy is +/- 0.1 % of span(2100 oF) +/- 1 degree (for negative temperatures add +/- 2 degrees). The CL-300 simulated exactly the millivoltage of a Type K thermocouple at the indicated temperature.

Desired Temp. (°F) Nominal	Response of Unit Under Test (°F)	Deviation	
		Δ t (°F)	%
0	1	1	0.217
100	101	1	0.179
200	204	4	0.606
300	303	3	0.395
400	401	1	0.116
500	500	0	0.000
600	603	3	0.283
700	700	0	0.000
800	803	3	0.238
900	902	2	0.147
1000	1004	4	0.274
1100	1104	4	0.256
1200	1204	4	0.241
1300	1305	5	0.284
1400	1404	4	0.215
1500	1505	5	0.255
1600	1605	5	0.243
1700	1703	3	0.139
1800	1802	2	0.088
1900	1903	3	0.127
2000			
2100	OF		
	Average:	**3**	**0.215**

OF = off scale response by unit under test (oF)

% dev = 100Δt/(460+t)

☐ **Unit was in tolerance**

(Must be within +/- 1.5% absolute reference temperature)

☐ **Unit was not in tolerance : Recalibrated see new calibration sheet or unit put out of service.**

MPU03284

INTERPOLL LABORATORIES, INC.
(763) 786-6020

Stack Sampling Department - QA
Field Barometer Calibration Sheet

Date:	4/5/2013
Technician:	Aaron Wilson
Mercury Column Barometer Number:	Weighing Room Barometer
Aneroid Barometer Number:	NO.1 (2109004)

Reference Mercury Barometer Reading	Ambient Temperature	Temperature Correction Factor	Adjusted Mercury Barometer Reading	Initial Field Barometer Reading	Difference (P_{ba} - P_{bm})
29.27	76	0.124	29.15	29.13	-0.016

Weighing room barometer setup:

1) Using the set screw on the bottom of the barometer, adjust the level of the mercury reservoir to the point that the level indicator makes slight contact with the mercury. A flashlight can aid in seeing the dimple formed when the level indicator makes contact with the mercury.

2) Slide the measurement ruler on the barometer to the point where the bottom of the ruler is in line with the top of the mercury column's reverse meniscus. Record the reading (in. Hg)

3) Take a temperature reading and record the temperature correction factor from the lookup table near the barometer.

4) Apply the temperature correction factor to the mercury barometer.

5) Adjust the field barometer reading to within +/- 0.1 in. Hg of the reference barometer reading.

Has this barometer shown any consistent problems with calibration? Has the problem been alleviated?_____

Note: Aneroid barometers will be calibrated periodically against a mercury column barometer. The aneroid barometer to be calibrated should be placed in close proximity to the mercury barometer and left to equilibrate for 20 - 30 minutes before calibrating. Aneroid barometer will be calibrated to the adjusted mercury barometer readings.

Alternative Calibration Procedure:

1) Obtain the station value or absolute barometric pressure Pr from a nearby National Weather Service station and its elevation (A) in feet above sea level.
2) Determine the elevation (B) in feet above sea level of the site of the field barometer.(local airport)
3) Calculate the site barometric pressure (Pb) as follows:

$$Pb = Pr + 0.001\ (A-B)$$

4) Compare the field barometer reading against Pb obtained in step 3.
5) Adjust the field barometer reading to within +/- 0.1 in. Hg.

MPU03285

Environmental Supply Company, Inc.

Quality Source Sampling Systems & Accessories

Wind Tunnel Pitot Calibration

Customer:	Interpoll Laboratories		
S-type Pitot ID:	04-5+P1	Date:	1-Apr-13
Standard Pitot ID:	001	Personnel:	DH
Cp(std):	0.99	Cp(actual):	0.831
Part Number:		P(bar):	29.35
Test Velocity (fps):	30 - 60 - 90	T(°F):	56

Calibration Results

Velocity (fps)	Nominal ΔPs [inches H_2O]	$Cp_{(s)}$ A-Side	$Cp_{(s)}$ B-Side	$Cp_{(s)}$ Average
30	0.284	0.834	0.836	0.835
60	1.142	0.825	0.833	0.829
90	2.623	0.824	0.833	0.828
		Overall Average		0.831

Pitot tube S/N 04-5+P1 was calibrated in accordance with the Code of Federal Regulations, Title 40, Part 60 Appendix A, Method 2, Section 10.

Signature

4/1/13
Date

708 E. Club Blvd., Durham, North Carolina 27704 www.environsupply.com 919-956-9688 FAX: 919-682-0333

S-Type Pitot (S/N 04-5+P1) - Pitot Coefficient (Cp) vs Velocity (fps)

Environmental Supply Company Wind Tunnel - 04/01/2013

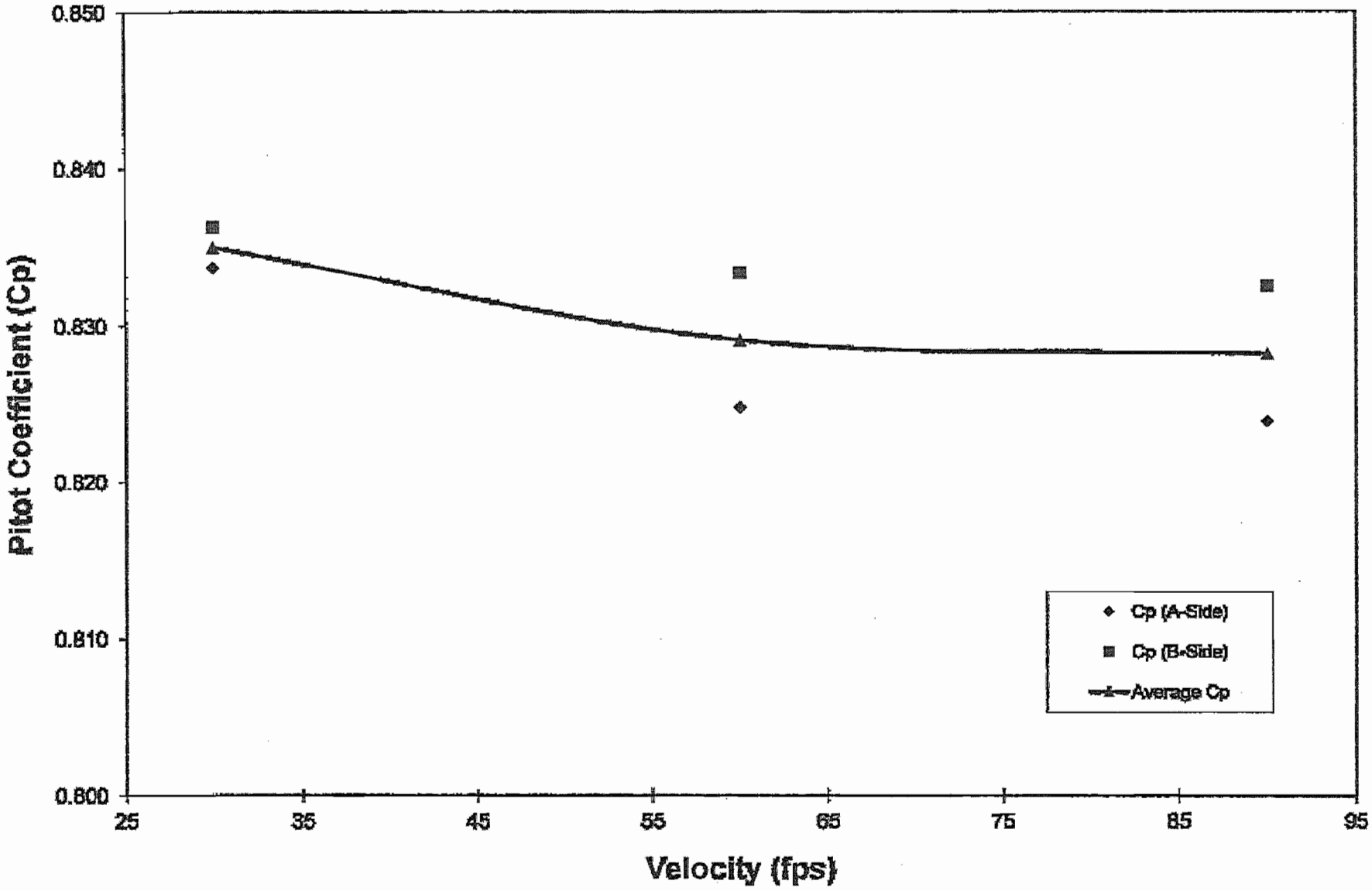

MPU03287

Environmental Supply Company, Inc.

Quality Source Sampling Systems & Accessories

Wind Tunnel Pitot Calibration

S-type Pitot ID:	04-5+P1	Date:	1-Apr-13
Standard Pitot ID:	001	Personnel:	DH
Cp(std):	0.99	Cp(actual):	0.835
Part Number:		P(bar):	29.35
Test Velocity (fps):	30	T(°F):	56

A-SIDE

ΔP_{std} (in. H_2O)	ΔP_s (in. H_2O)	Cp(s)	Deviation*
0.202	0.283	0.837	0.003
0.202	0.285	0.834	0.000
0.202	0.286	0.831	-0.003
0.201	0.285	0.833	-0.001
	AVERAGE	0.834	0.002
		Std deviation	0.003

B-SIDE

ΔP_{std} (in. H_2O)	ΔP_s (in. H_2O)	Cp(s)	Deviation*
0.202	0.282	0.839	0.003
0.202	0.283	0.836	0.000
0.202	0.284	0.835	-0.002
0.201	0.283	0.835	-0.001
	AVERAGE	0.836	0.001
		Std deviation	0.002

$$Cp(s) = Cp(std)\sqrt{\frac{\Delta P(std)}{\Delta P(s)}}$$

Cp(A) - Cp(B) = 0.003 must be <0.010>

*Deviation = {Cp(s) - *AVG* Cp(s)} {must be <0.010}

Standard deviation of the deviations must be less than 0.02 for both

Pitot tube S/N 04-5+P1 was calibrated in accordance with the CFR 40, Part 60 Appendix A, Method 2, Section 10.

708 E. Club Blvd., Durham, North Carolina 27704 www.environsupply.com 919-956-9688 FAX: 919-682-0333

MPU03288

Environmental Supply Company, Inc.

Quality Source Sampling Systems & Accessories

Wind Tunnel Pitot Calibration

S-type Pitot ID:	04-5+P1	Date:	1-Apr-13
Standard Pitot ID:	001	Personnel:	DH
Cp(std):	0.99	Cp(actual):	0.829
Part Number:		P(bar):	29.35
Test Velocity (fps):	60	T(°F):	56

A-SIDE

ΔP_{std} (in. H_2O)	ΔP_s (in. H_2O)	Cp(s)	Deviation*
0.799	1.154	0.824	-0.001
0.803	1.153	0.827	0.002
0.800	1.152	0.825	0.000
0.802	1.159	0.824	-0.001
	AVERAGE	0.825	0.001
		Std deviation	0.001

B-SIDE

ΔP_{std} (in. H_2O)	ΔP_s (in. H_2O)	Cp(s)	Deviation*
0.799	1.132	0.832	-0.002
0.803	1.129	0.835	0.002
0.800	1.130	0.833	0.000
0.802	1.131	0.834	0.000
	AVERAGE	0.833	0.001
		Std deviation	0.001

$$Cp(s) = Cp(std)\sqrt{\frac{\Delta P(std)}{\Delta P(s)}}$$

Cp(A) - Cp(B) = 0.009 (must be <0.010)

*Deviation = {Cp(s) - *AVG* Cp(s)} (must be <0.010)

Standard deviation of the deviations must be less than 0.02 for both

Pitot tube S/N 04-5+P1 was calibrated in accordance with the CFR 40, Part 60 Appendix A, Method 2, Section 10.

708 E. Club Blvd., Durham, North Carolina 27704 www.environsupply.com 919-956-9688 FAX: 919-682-0333

Environmental Supply Company, Inc.

Quality Source Sampling Systems & Accessories

Wind Tunnel Pitot Calibration

S-type Pitot ID:	04-5+P1	Date:	1-Apr-13
Standard Pitot ID:	001	Personnel:	DH
Cp(std):	0.99	Cp(actual):	0.828
Part Number:		P(bar):	29.35
Test Velocity (fps):	90	T(°F):	56

A-SIDE

ΔP_{std} (in. H_2O)	ΔP_s (in. H_2O)	Cp(s)	Deviation*
1.837	2.657	0.823	-0.001
1.836	2.652	0.824	0.000
1.832	2.642	0.824	0.001
1.837	2.651	0.824	0.000
	AVERAGE	0.824	0.000
		Std deviation	0.001

B-SIDE

ΔP_{std} (in. H_2O)	ΔP_s (in. H_2O)	Cp(s)	Deviation*
1.837	2.603	0.832	-0.001
1.836	2.594	0.833	0.000
1.832	2.588	0.833	0.000
1.837	2.597	0.833	0.000
	AVERAGE	0.833	0.000
		Std deviation	0.001

$$Cp(s) = Cp(std)\sqrt{\frac{\Delta P(std)}{\Delta P(s)}}$$

Cp(A) - Cp(B) = 0.009 (must be <0.010)

*Deviation = {Cp(s) - *AVG* Cp(s)} (must be <0.010)

Standard deviation of the deviations must be less than 0.02 for both

Pitot tube S/N 04-5+P1 was calibrated in accordance with the CFR 40, Part 60 Appendix A, Method 2, Section 10.

708 E. Club Blvd., Durham, North Carolina 27704 www.environsupply.com 919-956-9688 FAX: 919-682-0333

APPENDIX B

REFERENCE METHOD COMPUTER PRINTOUTS

MSI / Manitowoc PU
Manitowoc, WI
S20 Boiler Stack

7/23/2013
Test 1H Run 1
High Load (190 Klbs/Hr)

Volumetric Flow Rate Data

Number of Sample Points 16

Point Number		Delta p	Sq. root delta p	Temperature	Time
1	A-1	0.033	0.182	240	10:40 AM
2	A-2	0.032	0.179	240	
3	A-3	0.034	0.184	240	
4	A-4	0.039	0.197	240	
5	B-1	0.037	0.192	241	
6	B-2	0.033	0.182	241	
7	B-3	0.032	0.179	241	
8	B-4	0.031	0.176	241	
9	C-1	0.035	0.187	243	
10	C-2	0.033	0.182	243	
11	C-3	0.031	0.176	243	
12	C-4	0.030	0.173	243	
13	D-1	0.036	0.190	240	
14	D-2	0.033	0.182	240	
15	D-3	0.030	0.173	240	
16	D-4	0.031	0.176	240	10:46 AM
Average		0.033	0.182	241	

Moisture Content Data	
Dry Bulb (°F)	240
Wet Bulb (°F)	113.0
TRA	1.17
Vapor Pressure of Water	2.83
ZT	127.00
PM	148.68
Barometric Pressure	29.09
Standard Meter Volume	
Moisture Content	5.12
O_2 %	12.043
CO_2 %	7.45
Standard CFH	4,723,711
K Standard CFH	78.729

Flow Rate Data	
Static Pressure	-0.39
Pitot Coefficient	0.831
Duct Width (in.)	0.0
Duct Length (in.)	0.0
Duct Area (ft^2)	0.0
Stack Diameter (in.)	168.0
Stack Area (ft^2)	153.938
Molecular Weight (dry)	29.674
Molecular Weight (wet)	29.077
Stack Pressure	29.061
Feet per Second	11.651
Actual CFM	107612.41
DSCFM	74700.62

Field Calculations

Raw Data Table

Instrument	ppm or %	Zero	Span	Cylinder Value	Gas Corrected for Calibration	
O_2 (dry)	12.13	0.13	10.79	10.70	**12.04**	dry
CO_2 (wet)	7.14	0.05	8.38	8.30	**7.07**	wet

Moisture	5.12	**Standard CFH**	**4,723,711**
Fuel Factor C	1877	K Standard CFM	78.729
DSCFM	74701		

Results

Start Time	**10:40 AM**
Stop Time	**10:46 AM**
Standard CFH	**4,724,000**
CO_2 %, wet	**7.07**
WAF applied	**0.9900**

MSI / Manitowoc PU
Manitowoc, WI
S20 Boiler Stack

7/23/2013
Test 1H Run 2
High Load (190 Klbs/Hr)

Volumetric Flow Rate Data

Number of Sample Points 16

Point Number		Delta p	Sq. root delta p	Temperature	Time
1	A-1	0.029	0.170	246	10:47 AM
2	A-2	0.033	0.182	246	
3	A-3	0.031	0.176	246	
4	A-4	0.034	0.184	246	
5	B-1	0.031	0.176	247	
6	B-2	0.032	0.179	247	
7	B-3	0.034	0.184	247	
8	B-4	0.033	0.182	247	
9	C-1	0.035	0.187	247	
10	C-2	0.034	0.184	247	
11	C-3	0.037	0.192	247	
12	C-4	0.038	0.195	247	
13	D-1	0.034	0.184	247	
14	D-2	0.035	0.187	247	
15	D-3	0.037	0.192	247	
16	D-4	0.036	0.190	247	10:53 AM
Average		0.034	0.184	247	

Moisture Content Data	
Dry Bulb (°F)	246
Wet Bulb (°F)	113.0
TRA	1.17
Vapor Pressure of Water	2.83
ZT	133.00
PM	142.33
Barometric Pressure	29.09
Standard Meter Volume	
Moisture Content	4.90
O_2 %	12.063
CO_2 %	7.409
Standard CFH	4,760,486
K Standard CFH	79.341

Flow Rate Data	
Static Pressure	-0.39
Pitot Coefficient	0.83
Duct Width (in.)	0.00
Duct Length (in.)	0.00
Duct Area (ft^2)	0.00
Stack Diameter (in.)	168.00
Stack Area (ft^2)	153.94
Molecular Weight (dry)	29.668
Molecular Weight (wet)	29.097
Stack Pressure	29.061
Feet per Second	11.838
Actual CFM	109339.78
DSCFM	75455.51

Field Calculations

Raw Data Table

Instrument	ppm or %	Zero	Span	Cylinder Value	Gas Corrected for Calibration	
O_2 (dry)	12.13	0.10	10.77	10.70	**12.06**	dry
CO_2 (wet)	7.14	0.06	8.40	8.30	**7.05**	wet

Moisture	4.90	**Standard CFH**	**4,760,486**
Fuel Factor C	1877	K Standard CFM	79.341
DSCFM	75456		

Results

Start Time	**10:47 AM**
Stop Time	**10:53 AM**
Standard CFH	**4,760,000**
CO_2 %, wet	**7.05**
WAF applied	**0.9900**

MSI / Manitowoc PU
Manitowoc, WI
S20 Boiler Stack

7/23/2013
Test 1H Run 3
High Load (190 Klbs/Hr)

Volumetric Flow Rate Data

Number of Sample Points 16

Point Number		Delta p	Sq. root delta p	Temperature	Time
1	A-1	0.034	0.184	247	10:54 AM
2	A-2	0.038	0.195	247	
3	A-3	0.036	0.190	247	
4	A-4	0.032	0.179	247	
5	B-1	0.034	0.184	247	
6	B-2	0.035	0.187	247	
7	B-3	0.038	0.195	247	
8	B-4	0.031	0.176	247	
9	C-1	0.032	0.179	246	
10	C-2	0.034	0.184	246	
11	C-3	0.035	0.187	246	
12	C-4	0.036	0.190	246	
13	D-1	0.035	0.187	246	
14	D-2	0.031	0.176	246	
15	D-3	0.032	0.179	246	
16	D-4	0.033	0.182	246	11:00 AM
Average		0.034	0.185	247	

Moisture Content Data	
Dry Bulb (°F)	247
Wet Bulb (°F)	113.0
TRA	1.17
Vapor Pressure of Water	2.83
ZT	134.00
PM	141.28
Barometric Pressure	29.09
Standard Meter Volume	
Moisture Content	4.86
O_2 %	12.063
CO_2 %	7.407
Standard CFH	4,774,655
K Standard CFH	79.578

Flow Rate Data	
Static Pressure	-0.40
Pitot Coefficient	0.831
Duct Width (in.)	0.00
Duct Length (in.)	0.00
Duct Area (ft^2)	0.00
Stack Diameter (in.)	168.00
Stack Area (ft^2)	153.94
Molecular Weight (dry)	29.668
Molecular Weight (wet)	29.1
Stack Pressure	29.061
Feet per Second	11.869
Actual CFM	109629.19
DSCFM	75708.88

Field Calculations

Raw Data Table

Instrument	ppm or %	Zero	Span	Cylinder Value	Gas Corrected for Calibration	
O_2 (dry)	12.13	0.10	10.77	10.70	**12.06**	dry
CO_2 (wet)	7.14	0.06	8.40	8.30	**7.05**	wet

Moisture	4.86	**Standard CFH**	**4,774,655**
Fuel Factor C	1877	K Standard CFM	79.578
DSCFM	75709		

Results

Start Time	**10:54 AM**
Stop Time	**11:00 AM**
Standard CFH	**4,775,000**
CO_2 %, wet	**7.05**
WAF applied	**0.9900**

MSI / Manitowoc PU
Manitowoc, WI
S20 Boiler Stack
7/23/2013
Run 1-3

Time	$\%O_2$, d	$\% CO_2$, w
10:40	9.97	9.12
10:41	9.944	9.168
10:42	9.956	9.076
10:43	9.938	9.172
10:44	10.5	7.118
10:45	12.51	6.662
10:46	12.73	6.862
10:47	12.69	6.648
10:48	13.02	6.846
10:49	12.5	6.92
10:50	12.75	6.675
10:51	12.91	6.727
10:52	12.76	6.835
10:53	12.76	6.9
10:54	12.74	6.758
10:55	12.77	6.811
10:56	12.66	6.828
10:57	12.83	6.69
10:58	12.82	6.866
10:59	12.68	6.895
11:00	12.75	6.551
11:01	12.65	4.961
Average	**12.129**	**7.140**

MSI / Manitowoc PU
Manitowoc, WI
S20 Boiler Stack

7/23/2013
Test 1H Run 4
High Load (190 Klbs/Hr)

Volumetric Flow Rate Data

Number of Sample Points 16

Point Number		Delta p	Sq. root delta p	Temperature	Time
1	A-1	0.032	0.179	242	11:30 AM
2	A-2	0.033	0.182	242	
3	A-3	0.028	0.167	242	
4	A-4	0.030	0.173	242	
5	B-1	0.032	0.179	244	
6	B-2	0.034	0.184	244	
7	B-3	0.032	0.179	244	
8	B-4	0.035	0.187	244	
9	C-1	0.031	0.176	244	
10	C-2	0.033	0.182	244	
11	C-3	0.034	0.184	244	
12	C-4	0.035	0.187	244	
13	D-1	0.033	0.182	243	
14	D-2	0.034	0.184	243	
15	D-3	0.035	0.187	243	
16	D-4	0.036	0.190	243	11:36 AM
Average		0.033	0.181	243	

Moisture Content Data		Flow Rate Data	
Dry Bulb (°F)	242		
Wet Bulb (°F)	114.0	Static Pressure	-0.41
TRA	1.17	Pitot Coefficient	0.831
Vapor Pressure of Wate	2.91		
ZT	128.00	Duct Width (in.)	0
PM	155.82	Duct Length (in.)	0
Barometric Pressure	29.09	Duct Area (ft^2)	0
		Stack Diameter (in.)	168
Standard Meter Volume		Stack Area (ft^2)	153.94
Moisture Content	5.36		
		Molecular Weight (dry)	29.608
O_2 %	12.928	Molecular Weight (wet)	28.986
CO_2 %	6.818	Stack Pressure	29.06
		Feet per Second	11.658
Standard CFH	4,710,969	Actual CFM	107672.06
K Standard CFH	78.516	DSCFM	74306.15

Field Calculations

Raw Data Table

Instrument	ppm or %	Zero	Span	Cylinder Value	Gas Corrected for Calibration	
O_2 (dry)	13.00	0.11	10.78	10.70	**12.93**	dry
CO_2 (wet)	6.52	0.06	8.38	8.30	**6.45**	wet

Moisture	5.36	**Standard CFH**	**4,710,969**
Fuel Factor C	1877	K Standard CFM	78.516
DSCFM	74306		

Results

Start Time	**11:30 AM**
Stop Time	**11:36 AM**
Standard CFH	**4,711,000**
CO_2 %, wet	**6.45**
WAF applied	**0.9900**

MSI / Manitowoc PU
Manitowoc, WI
S20 Boiler Stack

7/23/2013
Test 1H **Run 5**
High Load (190 Klbs/Hr)

Volumetric Flow Rate Data

Number of Sample Points 16

Point Number		Delta p	Sq. root delta p	Temperature	Time
1	A-1	0.035	0.187	243	11:37 AM
2	A-2	0.033	0.182	243	
3	A-3	0.035	0.187	243	
4	A-4	0.032	0.179	243	
5	B-1	0.034	0.184	244	
6	B-2	0.038	0.195	244	
7	B-3	0.037	0.192	244	
8	B-4	0.035	0.187	244	
9	C-1	0.034	0.184	244	
10	C-2	0.035	0.187	244	
11	C-3	0.036	0.190	244	
12	C-4	0.034	0.184	244	
13	D-1	0.028	0.167	244	
14	D-2	0.034	0.184	244	
15	D-3	0.036	0.190	244	
16	D-4	0.036	0.190	244	11:43 AM
Average		0.035	0.186	244	

Moisture Content Data		Flow Rate Data	
Dry Bulb (°F)	243		
Wet Bulb (°F)	114.0	Static Pressure	-0.39
TRA	1.17	Pitot Coefficient	0.831
Vapor Pressure of Water	2.91		
ZT	129.00	Duct Width (in.)	0
PM	154.75	Duct Length (in.)	0
Barometric Pressure	29.09	Duct Area (ft^2)	0
		Stack Diameter (in.)	168
Standard Meter Volume		Stack Area (ft^2)	153.94
Moisture Content	5.33		
		Molecular Weight (dry)	29.611
O_2 %	12.923	Molecular Weight (wet)	28.993
CO_2 %	6.837	Stack Pressure	29.061
		Feet per Second	11.933
Standard CFH	4,818,967	Actual CFM	110213.15
K Standard CFH	80.316	DSCFM	76039.26

Field Calculations

Raw Data Table

Instrument	ppm or %	Zero	Span	Cylinder Value	Gas Corrected for Calibration	
O_2 (dry)	13.00	0.11	10.78	10.70	**12.92**	dry
CO_2 (wet)	6.52	0.05	8.35	8.30	**6.47**	wet

Moisture	5.33	**Standard CFH**	**4,818,967**
Fuel Factor C	1877	K Standard CFM	80.316
DSCFM	76039		

Results

Start Time	**11:37 AM**
Stop Time	**11:43 AM**
Standard CFH	**4,819,000**
CO_2 %, wet	**6.47**
WAF applied	**0.9900**

MSI / Manitowoc PU
Manitowoc, WI
S20 Boiler Stack

7/23/2013
Test 1H Run 6
High Load (190 Klbs/Hr)

Volumetric Flow Rate Data

Number of Sample Points 16

Point Number		Delta p	Sq. root delta p	Temperature	Time
1	A-1	0.031	0.176	244	11:44 AM
2	A-2	0.033	0.182	244	
3	A-3	0.030	0.173	244	
4	A-4	0.029	0.170	244	
5	B-1	0.027	0.164	245	
6	B-2	0.034	0.184	245	
7	B-3	0.034	0.184	245	
8	B-4	0.032	0.179	245	
9	C-1	0.031	0.176	244	
10	C-2	0.034	0.184	244	
11	C-3	0.035	0.187	244	
12	C-4	0.033	0.182	244	
13	D-1	0.034	0.184	244	
14	D-2	0.038	0.195	244	
15	D-3	0.035	0.187	244	
16	D-4	0.035	0.187	244	11:50 AM
Average		0.033	0.181	244	

Moisture Content Data	
Dry Bulb (°F)	244
Wet Bulb (°F)	114.0
TRA	1.17
Vapor Pressure of Water	2.91
ZT	130.00
PM	153.70
Barometric Pressure	29.09
Standard Meter Volume	
Moisture Content	5.29
O_2 %	12.923
CO_2 %	6.834
Standard CFH	4,696,221
K Standard CFH	78.27

Flow Rate Data	
Static Pressure	-0.41
Pitot Coefficient	0.831
Duct Width (in.)	0.00
Duct Length (in.)	0.00
Duct Area (ft^2)	0.00
Stack Diameter (in.)	168.00
Stack Area (ft^2)	153.94
Molecular Weight (dry)	29.61
Molecular Weight (wet)	28.996
Stack Pressure	29.06
Feet per Second	11.638
Actual CFM	107487.6
DSCFM	74130.52

Field Calculations

Raw Data Table

Instrument	ppm or %	Zero	Span	Cylinder Value	Gas Corrected for Calibration	
O_2 (dry)	13.00	0.11	10.78	10.70	**12.92**	dry
CO_2 (wet)	6.52	0.05	8.35	8.30	**6.47**	wet

Moisture	5.29	**Standard CFH**	**4,696,221**
Fuel Factor C	1877	K Standard CFM	78.27
DSCFM	74131		

Results

Start Time	**11:44 AM**
Stop Time	**11:50 AM**
Standard CFH	**4,696,000**
CO_2 %, wet	**6.47**
WAF applied	**0.9900**

MSI / Manitowoc PU
Manitowoc, WI
S20 Boiler Stack
7/23/2013
Run 4-6

Time	$\%O_2$, d	$\%\ CO_2$, w
11:30	12.75	6.731
11:31	12.9	6.457
11:32	13.17	6.439
11:33	12.9	6.618
11:34	12.89	6.506
11:35	13.01	6.484
11:36	13.17	6.344
11:37	13.1	6.66
11:38	12.94	6.471
11:39	13.14	6.675
11:40	12.93	6.501
11:41	13.06	6.6
11:42	13.08	6.463
11:43	13.09	6.648
11:44	12.86	6.463
11:45	13.09	6.544
11:46	12.98	6.67
11:47	12.79	6.555
11:48	12.98	6.504
11:49	12.97	6.508
11:50	13.07	6.482
11:51	13.06	6.543
11:52	13.04	6.587
11:53	13.01	6.848
11:54	12.67	6.687
11:55	12.84	6.606
11:56	12.93	6.505
11:57	13.08	6.532
11:58	13.02	6.501
11:59	12.85	6.598
12:00	12.91	6.587
12:01	12.98	6.474
12:02	12.99	6.559
12:03	13.05	6.356
12:04	13.18	6.408
12:05	13.14	6.598
12:06	12.92	6.56
12:07	12.95	6.437
12:08	13.05	6.515
12:09	12.91	6.501
12:10	13.05	6.397
12:11	13.01	6.426
12:12	13.11	6.317
12:13	13.03	6.645
12:14	12.85	6.521
12:15	13.05	6.364
12:16	13.08	6.396
12:17	13.1	6.317
12:18	13.1	6.505
Average	**12.997**	**6.523**

MPU03299

MSI / Manitowoc PU
Manitowoc, WI
S20 Boiler Stack

7/23/2013
Test 1H **Run 7**
High Load (190 Klbs/Hr)

Volumetric Flow Rate Data

Number of Sample Points 16

Point Number		Delta p	Sq. root delta p	Temperature	Time
1	A-1	0.034	0.184	243	11:51 AM
2	A-2	0.031	0.176	243	
3	A-3	0.032	0.179	243	
4	A-4	0.031	0.176	243	
5	B-1	0.033	0.182	243	
6	B-2	0.037	0.192	243	
7	B-3	0.038	0.195	243	
8	B-4	0.038	0.195	243	
9	C-1	0.033	0.182	244	
10	C-2	0.036	0.190	244	
11	C-3	0.036	0.190	244	
12	C-4	0.031	0.176	244	
13	D-1	0.035	0.187	244	
14	D-2	0.036	0.190	244	
15	D-3	0.037	0.192	244	
16	D-4	0.033	0.182	244	11:57 AM
Average		0.034	0.185	244	

Moisture Content Data		Flow Rate Data	
Dry Bulb (^{0}F)	243		
Wet Bulb (^{0}F)	114.0	Static Pressure	-0.43
TRA	1.17	Pitot Coefficient	0.831
Vapor Pressure of Water	2.91		
ZT	129.00	Duct Width (in.)	0.00
PM	154.77	Duct Length (in.)	0.00
Barometric Pressure	29.09	Duct Area (ft^2)	0.00
		Stack Diameter (in.)	168.00
Standard Meter Volume		Stack Area (ft^2)	153.94
Moisture Content	5.33		
		Molecular Weight (dry)	29.611
O_2 %	12.923	Molecular Weight (wet)	28.992
CO_2 %	6.837	Stack Pressure	29.058
		Feet per Second	11.919
Standard CFH	4,814,816	Actual CFM	110090.24
K Standard CFH	80.247	DSCFM	75972.94

Field Calculations

Raw Data Table

Instrument	ppm or %	Zero	Span	Cylinder Value	Gas Corrected for Calibration	
O_2 (dry)	13.00	0.11	10.78	10.7	**12.92**	dry
CO_2 (wet)	6.52	0.05	8.35	8.3	**6.47**	wet

Moisture	5.33	**Standard CFH**	**4,814,816**
Fuel Factor C	1877	K Standard CFM	80.247
DSCFM	75973		

Results

Start Time	**11:51 AM**
Stop Time	**11:57 AM**
Standard CFH	**4,815,000**
CO_2 %, wet	**6.47**
WAF applied	**0.9900**

MSI / Manitowoc PU
Manitowoc, WI
S20 Boiler Stack

7/23/2013
Test 1H **Run 8**
High Load (190 Klbs/Hr)

Volumetric Flow Rate Data

Number of Sample Points 16

Point Number		Delta p	Sq. root delta p	Temperature	Time
1	A-1	0.034	0.184	242	11:58 AM
2	A-2	0.030	0.173	242	
3	A-3	0.033	0.182	242	
4	A-4	0.028	0.167	242	
5	B-1	0.034	0.184	241	
6	B-2	0.033	0.182	241	
7	B-3	0.037	0.192	241	
8	B-4	0.039	0.197	241	
9	C-1	0.038	0.195	243	
10	C-2	0.036	0.190	243	
11	C-3	0.037	0.192	243	
12	C-4	0.035	0.187	243	
13	D-1	0.037	0.192	243	
14	D-2	0.035	0.187	243	
15	D-3	0.038	0.195	243	
16	D-4	0.036	0.190	243	12:04 PM
Average		0.035	0.187	242	

Moisture Content Data		Flow Rate Data	
Dry Bulb (°F)	242		
Wet Bulb (°F)	114.0	Static Pressure	-0.44
TRA	1.17	Pitot Coefficient	0.831
Vapor Pressure of Water	2.91		
ZT	128.00	Duct Width (in.)	0.00
PM	155.83	Duct Length (in.)	0.00
Barometric Pressure	29.09	Duct Area (ft^2)	0.00
		Stack Diameter (in.)	168.00
Standard Meter Volume		Stack Area (ft^2)	153.94
Moisture Content	5.36		
		Molecular Weight (dry)	29.611
O_2 %	12.923	Molecular Weight (wet)	28.989
CO_2 %	6.839	Stack Pressure	29.058
		Feet per Second	12.003
Standard CFH	4,857,304	Actual CFM	110867.19
K Standard CFH	80.955	DSCFM	76613.68

Field Calculations

Raw Data Table

Instrument	ppm or %	Zero	Span	Cylinder Value	Gas Corrected for Calibration	
O_2 (dry)	13.00	0.11	10.78	10.7	**12.92**	dry
CO_2 (wet)	6.52	0.05	8.35	8.3	**6.47**	wet

Moisture	5.36	**Standard CFH**	**4,857,304**
Fuel Factor C	1877	K Standard CFM	80.955
DSCFM	76614		

Results

Start Time	**11:58 AM**
Stop Time	**12:04 PM**
Standard CFH	**4,857,000**
CO_2 %, wet	**6.47**
WAF applied	**0.9900**

MSI / Manitowoc PU
Manitowoc, WI
S20 Boiler Stack

7/23/2013
Test 1H Run 9
High Load (190 Klbs/Hr)

Volumetric Flow Rate Data

Number of Sample Points 16

Point Number		Delta p	Sq. root delta p	Temperature	Time
1	A-1	0.031	0.176	241	12:05 PM
2	A-2	0.029	0.170	241	
3	A-3	0.030	0.173	241	
4	A-4	0.028	0.167	241	
5	B-1	0.036	0.190	243	
6	B-2	0.038	0.195	243	
7	B-3	0.039	0.197	243	
8	B-4	0.038	0.195	243	
9	C-1	0.035	0.187	242	
10	C-2	0.039	0.197	242	
11	C-3	0.033	0.182	242	
12	C-4	0.031	0.176	242	
13	D-1	0.034	0.184	242	
14	D-2	0.037	0.192	242	
15	D-3	0.038	0.195	242	
16	D-4	0.038	0.195	242	12:11 PM
Average		0.035	0.186	242	

Moisture Content Data		Flow Rate Data	
Dry Bulb (°F)	241		
Wet Bulb (°F)	114.0	Static Pressure	-0.40
TRA	1.17	Pitot Coefficient	0.831
Vapor Pressure of Water	2.91		
ZT	127.00	Duct Width (in.)	0.00
PM	156.87	Duct Length (in.)	0.00
Barometric Pressure	29.09	Duct Area (ft^2)	0.00
		Stack Diameter (in.)	168.00
Standard Meter Volume		Stack Area (ft^2)	153.94
Moisture Content	5.40		
		Molecular Weight (dry)	29.612
O_2 %	12.923	Molecular Weight (wet)	28.985
CO_2 %	6.842	Stack Pressure	29.061
		Feet per Second	11.93
Standard CFH	4,829,824	Actual CFM	110189.55
K Standard CFH	80.497	DSCFM	76151.73

Field Calculations

Raw Data Table

Instrument	ppm or %	Zero	Span	Cylinder Value	Gas Corrected for Calibration	
O_2 (dry)	13.00	0.11	10.78	10.7	**12.92**	dry
CO_2 (wet)	6.52	0.05	8.35	8.3	**6.47**	wet

Moisture	5.40	**Standard CFH**	**4,829,824**
Fuel Factor C	1877	K Standard CFM	80.497
DSCFM	76152		

Results

Start Time	**12:05 PM**
Stop Time	**12:11 PM**
Standard CFH	**4,830,000**
CO_2 %, wet	**6.47**
WAF applied	**0.9900**

MSI / Manitowoc PU
Manitowoc, WI
S20 Boiler Stack
7/23/2013
Run 7-9

Time	$\%O_2$, d	$\%\ CO_2$, w
11:30	12.75	6.731
11:31	12.9	6.457
11:32	13.17	6.439
11:33	12.9	6.618
11:34	12.89	6.506
11:35	13.01	6.484
11:36	13.17	6.344
11:37	13.1	6.66
11:38	12.94	6.471
11:39	13.14	6.675
11:40	12.93	6.501
11:41	13.06	6.6
11:42	13.08	6.463
11:43	13.09	6.648
11:44	12.86	6.463
11:45	13.09	6.544
11:46	12.98	6.67
11:47	12.79	6.555
11:48	12.98	6.504
11:49	12.97	6.508
11:50	13.07	6.482
11:51	13.06	6.543
11:52	13.04	6.587
11:53	13.01	6.848
11:54	12.67	6.687
11:55	12.84	6.606
11:56	12.93	6.505
11:57	13.08	6.532
11:58	13.02	6.501
11:59	12.85	6.598
12:00	12.91	6.587
12:01	12.98	6.474
12:02	12.99	6.559
12:03	13.05	6.356
12:04	13.18	6.408
12:05	13.14	6.598
12:06	12.92	6.56
12:07	12.95	6.437
12:08	13.05	6.515
12:09	12.91	6.501
12:10	13.05	6.397
12:11	13.01	6.426
12:12	13.11	6.317
12:13	13.03	6.645
12:14	12.85	6.521
12:15	13.05	6.364
12:16	13.08	6.396
12:17	13.1	6.317
12:18	13.1	6.505
Average	**12.997**	**6.523**

MSI / Manitowoc PU
Manitowoc, WI
S20 Boiler Stack

7/23/2013
Test 1H Run 10
High Load (190 Klbs/Hr)

Volumetric Flow Rate Data

Number of Sample Points 16

Point Number		Delta p	Sq. root delta p	Temperature	Time
1	A-1	0.030	0.173	243	12:12 PM
2	A-2	0.032	0.179	243	
3	A-3	0.030	0.173	243	
4	A-4	0.032	0.179	243	
5	B-1	0.031	0.176	244	
6	B-2	0.033	0.182	244	
7	B-3	0.038	0.195	244	
8	B-4	0.033	0.182	244	
9	C-1	0.037	0.192	245	
10	C-2	0.037	0.192	245	
11	C-3	0.038	0.195	245	
12	C-4	0.033	0.182	245	
13	D-1	0.034	0.184	244	
14	D-2	0.035	0.187	244	
15	D-3	0.036	0.190	244	
16	D-4	0.036	0.190	244	12:18 PM
Average		0.034	0.184	244	

Moisture Content Data	
Dry Bulb (°F)	243
Wet Bulb (°F)	114.0
TRA	1.17
Vapor Pressure of Water	2.91
ZT	129.00
PM	154.75
Barometric Pressure	29.09
Standard Meter Volume	
Moisture Content	5.33
O_2 %	12.923
CO_2 %	6.837
Standard CFH	4,786,451
K Standard CFH	79.774

Flow Rate Data	
Static Pressure	-0.39
Pitot Coefficient	0.831
Duct Width (in.)	0.00
Duct Length (in.)	0.00
Duct Area (ft^2)	0.00
Stack Diameter (in.)	168.00
Stack Area (ft^2)	153.94
Molecular Weight (dry)	29.611
Molecular Weight (wet)	28.993
Stack Pressure	29.061
Feet per Second	11.856
Actual CFM	109508.36
DSCFM	75526.17

Field Calculations

Raw Data Table

Instrument	ppm or %	Zero	Span	Cylinder Value	Gas Corrected for Calibration	
O_2 (dry)	13.00	0.11	10.78	10.7	**12.92**	dry
CO_2 (wet)	6.52	0.05	8.35	8.3	**6.47**	wet

Moisture	5.33	**Standard CFH**	**4,786,451**
Fuel Factor C	1877	K Standard CFM	79.774
DSCFM	75526		

Results

Start Time	**12:12 PM**
Stop Time	**12:18 PM**
Standard CFH	**4,786,000**
CO_2 %, wet	**6.47**
WAF applied	**0.9900**

MSI / Manitowoc PU
Manitowoc, WI
S20 Boiler Stack
7/23/2013
Run 10

Time	$\%O_2$, d	$\%\ CO_2$, w
11:30	12.75	6.731
11:31	12.9	6.457
11:32	13.17	6.439
11:33	12.9	6.618
11:34	12.89	6.506
11:35	13.01	6.484
11:36	13.17	6.344
11:37	13.1	6.66
11:38	12.94	6.471
11:39	13.14	6.675
11:40	12.93	6.501
11:41	13.06	6.6
11:42	13.08	6.463
11:43	13.09	6.648
11:44	12.86	6.463
11:45	13.09	6.544
11:46	12.98	6.67
11:47	12.79	6.555
11:48	12.98	6.504
11:49	12.97	6.508
11:50	13.07	6.482
11:51	13.06	6.543
11:52	13.04	6.587
11:53	13.01	6.848
11:54	12.67	6.687
11:55	12.84	6.606
11:56	12.93	6.505
11:57	13.08	6.532
11:58	13.02	6.501
11:59	12.85	6.598
12:00	12.91	6.587
12:01	12.98	6.474
12:02	12.99	6.559
12:03	13.05	6.356
12:04	13.18	6.408
12:05	13.14	6.598
12:06	12.92	6.56
12:07	12.95	6.437
12:08	13.05	6.515
12:09	12.91	6.501
12:10	13.05	6.397
12:11	13.01	6.426
12:12	13.11	6.317
12:13	13.03	6.645
12:14	12.85	6.521
12:15	13.05	6.364
12:16	13.08	6.396
12:17	13.1	6.317
12:18	13.1	6.505
Average	**12.997**	**6.523**

MSI / Manitowoc PU
Manitowoc, WI
S20 Boiler Stack

7/23/2013
Test 1L Run 1
Low Load (80 Klbs/Hr)

Volumetric Flow Rate Data

Number of Sample Points 16

Point Number		Delta p	Sq. root delta p	Temperature	Time
1	A-1	0.018	0.134	205	5:15 AM
2	A-2	0.016	0.126	205	
3	A-3	0.016	0.126	205	
4	A-4	0.019	0.138	205	
5	B-1	0.021	0.145	204	
6	B-2	0.024	0.155	204	
7	B-3	0.024	0.155	204	
8	B-4	0.022	0.148	204	
9	C-1	0.021	0.145	205	
10	C-2	0.025	0.158	205	
11	C-3	0.024	0.155	205	
12	C-4	0.022	0.148	205	
13	D-1	0.016	0.126	206	
14	D-2	0.019	0.138	206	
15	D-3	0.017	0.130	206	
16	D-4	0.015	0.122	206	5:25 AM
Average		0.020	0.141	205	

Moisture Content Data	
Dry Bulb (°F)	205
Wet Bulb (°F)	108.0
TRA	1.18
Vapor Pressure of Water	2.45
ZT	97.00
PM	142.40
Barometric Pressure	29.09
Standard Meter Volume	
Moisture Content	4.90
O_2 %	11.404
CO_2 %	8.414
Standard CFH	3,742,879
K Standard CFH	62.381

Flow Rate Data	
Static Pressure	-0.39
Pitot Coefficient	0.831
Duct Width (in.)	0.0
Duct Length (in.)	0.0
Duct Area (ft^2)	0.0
Stack Diameter (in.)	168.0
Stack Area (ft^2)	153.938
Molecular Weight (dry)	29.802
Molecular Weight (wet)	29.224
Stack Pressure	29.061
Feet per Second	8.758
Actual CFM	80888.82
DSCFM	59324.65

Field Calculations

Raw Data Table

Instrument	ppm or %	Zero	Span	Cylinder Value	Gas Corrected for Calibration	
O_2 (dry)	11.55	0.17	10.85	10.70	**11.40**	dry
CO_2 (wet)	8.04	0.04	8.34	8.30	**8.00**	wet

Moisture	4.90	**Standard CFH**	**3,742,879**
Fuel Factor C	1877	K Standard CFM	62.381
DSCFM	59325		

Results

Start Time	**5:15 AM**
Stop Time	**5:25 AM**
Standard CFH	**3,743,000**
CO_2 %, wet	**8.00**
WAF applied	**0.9900**

MSI / Manitowoc PU
Manitowoc, WI
S20 Boiler Stack
7/23/2013
Run 1

Time	$\%O_2$, d	$\%\ CO_2$, w
5:15	11.43	8.143
5:16	11.52	8.092
5:17	11.65	7.958
5:18	11.63	7.973
5:19	11.65	7.966
5:20	11.64	7.964
5:21	11.6	7.99
5:22	11.57	8.018
5:23	11.46	8.109
5:24	11.47	8.107
5:25	11.46	8.093
Average	**11.553**	**8.038**

MSI / Manitowoc PU
Manitowoc, WI
S20 Boiler Stack

7/23/2013
Test 1L Run 2
Low Load (80 Klbs/Hr)

Volumetric Flow Rate Data

Number of Sample Points 16

Point Number		Delta p	Sq. root delta p	Temperature	Time
1	A-1	0.018	0.134	206	6:20 AM
2	A-2	0.019	0.138	206	
3	A-3	0.017	0.130	206	
4	A-4	0.016	0.126	206	
5	B-1	0.022	0.148	207	
6	B-2	0.023	0.152	207	
7	B-3	0.024	0.155	207	
8	B-4	0.021	0.145	207	
9	C-1	0.017	0.130	205	
10	C-2	0.019	0.138	205	
11	C-3	0.018	0.134	205	
12	C-4	0.019	0.138	205	
13	D-1	0.022	0.148	205	
14	D-2	0.021	0.145	205	
15	D-3	0.018	0.134	205	
16	D-4	0.017	0.130	205	6:30 AM
Average		0.019	0.139	206	

Moisture Content Data		Flow Rate Data	
Dry Bulb (°F)	206		
Wet Bulb (°F)	108.0	Static Pressure	-0.39
TRA	1.18	Pitot Coefficient	0.83
Vapor Pressure of Water	2.45		
ZT	98.00	Duct Width (in.)	0.00
PM	141.34	Duct Length (in.)	0.00
Barometric Pressure	29.09	Duct Area (ft^2)	0.00
		Stack Diameter (in.)	168.00
Standard Meter Volume		Stack Area (ft^2)	153.94
Moisture Content	4.86		
		Molecular Weight (dry)	29.459
O_2 %	14.326	Molecular Weight (wet)	28.901
CO_2 %	5.535	Stack Pressure	29.061
		Feet per Second	8.714
Standard CFH	3,720,136	Actual CFM	80487.98
K Standard CFH	62.002	DSCFM	58986.74

Field Calculations

Raw Data Table

Instrument	ppm or %	Zero	Span	Cylinder Value	Gas Corrected for Calibration	
O_2 (dry)	14.47	0.14	10.84	10.70	**14.33**	dry
CO_2 (wet)	5.30	0.06	8.32	8.30	**5.27**	wet

Moisture	4.86	**Standard CFH**	**3,720,136**
Fuel Factor C	1877	K Standard CFM	62.002
DSCFM	58987		

Results

Start Time	**6:20 AM**
Stop Time	**6:30 AM**
Standard CFH	**3,720,000**
CO_2 %, wet	**5.27**
WAF applied	**0.9900**

MSI / Manitowoc PU
Manitowoc, WI
S20 Boiler Stack

7/23/2013
Test 1L Run 3
Low Load (80 Klbs/Hr)

Volumetric Flow Rate Data

Number of Sample Points 16

Point Number		Delta p	Sq. root delta p	Temperature	Time
1	A-1	0.014	0.118	207	6:31 AM
2	A-2	0.016	0.126	207	
3	A-3	0.016	0.126	207	
4	A-4	0.015	0.122	207	
5	B-1	0.024	0.155	207	
6	B-2	0.021	0.145	207	
7	B-3	0.022	0.148	207	
8	B-4	0.020	0.141	207	
9	C-1	0.025	0.158	206	
10	C-2	0.023	0.152	206	
11	C-3	0.022	0.148	206	
12	C-4	0.021	0.145	206	
13	D-1	0.020	0.141	207	
14	D-2	0.019	0.138	207	
15	D-3	0.018	0.134	207	
16	D-4	0.017	0.130	207	6:38 AM
Average		0.020	0.139	207	

Moisture Content Data	
Dry Bulb (°F)	207
Wet Bulb (°F)	108.0
TRA	1.18
Vapor Pressure of Water	2.45
ZT	99.00
PM	140.29
Barometric Pressure	29.09
Standard Meter Volume	
Moisture Content	4.83
O_2 %	14.393
CO_2 %	5.533
Standard CFH	3,722,674
K Standard CFH	62.045

Flow Rate Data	
Static Pressure	-0.40
Pitot Coefficient	0.831
Duct Width (in.)	0.00
Duct Length (in.)	0.00
Duct Area (ft^2)	0.00
Stack Diameter (in.)	168.00
Stack Area (ft^2)	153.94
Molecular Weight (dry)	29.461
Molecular Weight (wet)	28.908
Stack Pressure	29.061
Feet per Second	8.734
Actual CFM	80665.91
DSCFM	59049.44

Field Calculations

Raw Data Table

Instrument	ppm or %	Zero	Span	Cylinder Value	Gas Corrected for Calibration	
O_2 (dry)	14.47	0.14	10.79	10.70	**14.39**	dry
CO_2 (wet)	5.30	0.06	8.32	8.30	**5.27**	wet

Moisture	4.83	**Standard CFH**	**3,722,674**
Fuel Factor C	1877	K Standard CFM	62.045
DSCFM	59049		

Results

Start Time	**6:31 AM**
Stop Time	**6:38 AM**
Standard CFH	**3,723,000**
CO_2 %, wet	**5.27**
WAF applied	**0.9900**

MSI / Manitowoc PU
Manitowoc, WI
S20 Boiler Stack

7/23/2013
Test 1L Run 4
Low Load (80 Klbs/Hr)

Volumetric Flow Rate Data

Number of Sample Points 16

Point Number		Delta p	Sq. root delta p	Temperature	Time
1	A-1	0.014	0.118	207	6:39 AM
2	A-2	0.015	0.122	207	
3	A-3	0.017	0.130	207	
4	A-4	0.014	0.118	207	
5	B-1	0.019	0.138	208	
6	B-2	0.020	0.141	208	
7	B-3	0.023	0.152	208	
8	B-4	0.019	0.138	208	
9	C-1	0.018	0.134	208	
10	C-2	0.018	0.134	207	
11	C-3	0.019	0.138	207	
12	C-4	0.017	0.130	207	
13	D-1	0.020	0.141	207	
14	D-2	0.016	0.126	207	
15	D-3	0.016	0.126	207	
16	D-4	0.017	0.130	207	6:46 AM
Average		0.018	0.132	207	

Moisture Content Data	
Dry Bulb (°F)	207
Wet Bulb (°F)	108.0
TRA	1.18
Vapor Pressure of Wate	2.45
ZT	99.00
PM	140.28
Barometric Pressure	29.09
Standard Meter Volume	
Moisture Content	4.83
O_2 %	14.378
CO_2 %	5.531
Standard CFH	3,536,707
K Standard CFH	58.945

Flow Rate Data	
Static Pressure	-0.39
Pitot Coefficient	0.831
Duct Width (in.)	0
Duct Length (in.)	0
Duct Area (ft^2)	0
Stack Diameter (in.)	168
Stack Area (ft^2)	153.94
Molecular Weight (dry)	29.46
Molecular Weight (wet)	28.907
Stack Pressure	29.061
Feet per Second	8.304
Actual CFM	76698.94
DSCFM	56099.74

Field Calculations

Raw Data Table

Instrument	ppm or %	Zero	Span	Cylinder Value	Gas Corrected for Calibration	
O_2 (dry)	14.47	0.09	10.79	10.70	**14.38**	dry
CO_2 (wet)	5.30	0.06	8.32	8.30	**5.26**	wet

Moisture	4.83	**Standard CFH**	**3,536,707**
Fuel Factor C	1877	K Standard CFM	58.945
DSCFM	56100		

Results

Start Time	**6:39 AM**
Stop Time	**6:46 AM**
Standard CFH	**3,537,000**
CO_2 %, wet	**5.26**
WAF applied	**0.9900**

MPU03310

MSI / Manitowoc PU
Manitowoc, WI
S20 Boiler Stack
7/23/2013
Run 2-4

Time	$\%O_2$, d	$\% CO_2$, w
6:20	14.73	5.616
6:21	14.68	5.6
6:22	14.54	5.525
6:23	14.42	5.337
6:24	14.64	5.068
6:25	15.03	5.18
6:26	14.39	5.525
6:27	14.26	5.518
6:28	14.23	5.484
6:29	14.21	5.57
6:30	14.13	5.524
6:31	14.16	5.465
6:32	14.14	5.537
6:33	14.2	4.767
6:34	15.23	4.566
6:35	14.75	5.491
6:36	14.09	5.553
6:37	14.03	5.54
6:38	14.01	5.481
6:39	14.25	5.289
6:40	14.42	4.996
6:41	15.01	3.928
6:42	15.62	5.245
6:43	14.46	5.314
6:44	14.32	5.32
6:45	14.35	5.328
6:46	14.33	5.298
Average	**14.468**	**5.299**

MSI / Manitowoc PU
Manitowoc, WI
S20 Boiler Stack

7/23/2013
Test 1L **Run 5**
Low Load (80 Klbs/Hr)

Volumetric Flow Rate Data

Number of Sample Points 16

Point Number		Delta p	Sq. root delta p	Temperature	Time
1	A-1	0.016	0.126	208	7:02 AM
2	A-2	0.018	0.134	208	
3	A-3	0.019	0.138	208	
4	A-4	0.019	0.138	208	
5	B-1	0.022	0.148	208	
6	B-2	0.019	0.138	208	
7	B-3	0.018	0.134	208	
8	B-4	0.020	0.141	208	
9	C-1	0.020	0.141	208	
10	C-2	0.023	0.152	208	
11	C-3	0.025	0.158	208	
12	C-4	0.023	0.152	208	
13	D-1	0.017	0.130	207	
14	D-2	0.018	0.134	207	
15	D-3	0.017	0.130	207	
16	D-4	0.016	0.126	207	7:10 AM
Average		0.019	0.139	208	

Moisture Content Data	
Dry Bulb (°F)	208
Wet Bulb (°F)	108.0
TRA	1.18
Vapor Pressure of Water	2.45
ZT	100.00
PM	139.23
Barometric Pressure	29.09
Standard Meter Volume	
Moisture Content	4.79
O_2 %	14.836
CO_2 %	4.928
Standard CFH	3,711,463
K Standard CFH	61.858

Flow Rate Data	
Static Pressure	-0.39
Pitot Coefficient	0.831
Duct Width (in.)	0
Duct Length (in.)	0
Duct Area (ft^2)	0
Stack Diameter (in.)	168
Stack Area (ft^2)	153.94
Molecular Weight (dry)	29.382
Molecular Weight (wet)	28.837
Stack Pressure	29.061
Feet per Second	8.72
Actual CFM	80541.57
DSCFM	58894.27

Field Calculations

Raw Data Table

Instrument	ppm or %	Zero	Span	Cylinder Value	Gas Corrected for Calibration	
O_2 (dry)	14.90	0.10	10.78	10.70	**14.84**	dry
CO_2 (wet)	4.75	0.08	8.35	8.30	**4.69**	wet

Moisture	4.79	**Standard CFH**	3,711,463
Fuel Factor C	1877	K Standard CFM	61.858
DSCFM	58894		

Results

Start Time	**7:02 AM**
Stop Time	**7:10 AM**
Standard CFH	**3,711,000**
CO_2 %, wet	**4.69**
WAF applied	**0.9900**

MSI / Manitowoc PU
Manitowoc, WI
S20 Boiler Stack

7/23/2013
Test 1L Run 6
Low Load (80 Klbs/Hr)

Volumetric Flow Rate Data

Number of Sample Points 16

Point Number		Delta p	Sq. root delta p	Temperature	Time
1	A-1	0.016	0.126	207	7:11 AM
2	A-2	0.018	0.134	207	
3	A-3	0.018	0.134	207	
4	A-4	0.019	0.138	207	
5	B-1	0.018	0.134	208	
6	B-2	0.019	0.138	208	
7	B-3	0.017	0.130	208	
8	B-4	0.019	0.138	208	
9	C-1	0.022	0.148	206	
10	C-2	0.023	0.152	206	
11	C-3	0.025	0.158	206	
12	C-4	0.021	0.145	206	
13	D-1	0.018	0.134	206	
14	D-2	0.017	0.130	206	
15	D-3	0.018	0.134	206	
16	D-4	0.016	0.126	206	7:16 AM
Average		0.019	0.138	207	

Moisture Content Data		Flow Rate Data	
Dry Bulb (°F)	207		
Wet Bulb (°F)	108.0	Static Pressure	-0.39
TRA	1.18	Pitot Coefficient	0.831
Vapor Pressure of Water	2.45		
ZT	99.00	Duct Width (in.)	0.00
PM	140.28	Duct Length (in.)	0.00
Barometric Pressure	29.09	Duct Area (ft^2)	0.00
		Stack Diameter (in.)	168.00
Standard Meter Volume		Stack Area (ft^2)	153.94
Moisture Content	4.83		
		Molecular Weight (dry)	29.379
O_2 %	14.861	Molecular Weight (wet)	28.83
CO_2 %	4.905	Stack Pressure	29.061
		Feet per Second	8.631
Standard CFH	3,679,142	Actual CFM	79720.61
K Standard CFH	61.319	DSCFM	58359.07

Field Calculations

Raw Data Table

Instrument	ppm or %	Zero	Span	Cylinder Value	Gas Corrected for Calibration	
O_2 (dry)	14.90	0.11	10.76	10.70	**14.86**	dry
CO_2 (wet)	4.75	0.09	8.38	8.30	**4.67**	wet

Moisture	4.83	**Standard CFH**	**3,679,142**
Fuel Factor C	1877	K Standard CFM	61.319
DSCFM	58359		

Results

Start Time	**7:11 AM**
Stop Time	**7:16 AM**
Standard CFH	**3,679,000**
CO_2 %, wet	**4.67**
WAF applied	**0.9900**

MSI / Manitowoc PU
Manitowoc, WI
S20 Boiler Stack

7/23/2013
Test 1L Run 7
Low Load (80 Klbs/Hr)

Volumetric Flow Rate Data

Number of Sample Points 16

Point Number		Delta p	Sq. root delta p	Temperature	Time
1	A-1	0.018	0.134	209	7:17 AM
2	A-2	0.019	0.138	209	
3	A-3	0.017	0.130	209	
4	A-4	0.019	0.138	209	
5	B-1	0.020	0.141	209	
6	B-2	0.018	0.134	209	
7	B-3	0.019	0.138	209	
8	B-4	0.019	0.138	209	
9	C-1	0.023	0.152	210	
10	C-2	0.024	0.155	210	
11	C-3	0.025	0.158	210	
12	C-4	0.022	0.148	210	
13	D-1	0.018	0.134	210	
14	D-2	0.016	0.126	210	
15	D-3	0.016	0.126	210	
16	D-4	0.017	0.130	210	7:24 AM
Average		0.019	0.139	210	

Moisture Content Data	
Dry Bulb (°F)	209
Wet Bulb (°F)	108.0
TRA	1.18
Vapor Pressure of Water	2.45
ZT	101.00
PM	138.16
Barometric Pressure	29.09
Standard Meter Volume	
Moisture Content	4.75
O_2 %	14.861
CO_2 %	4.901
Standard CFH	3,706,056
K Standard CFH	61.768

Flow Rate Data	
Static Pressure	-0.38
Pitot Coefficient	0.831
Duct Width (in.)	0.00
Duct Length (in.)	0.00
Duct Area (ft^2)	0.00
Stack Diameter (in.)	168.00
Stack Area (ft^2)	153.94
Molecular Weight (dry)	29.379
Molecular Weight (wet)	28.838
Stack Pressure	29.062
Feet per Second	8.73
Actual CFM	80632.95
DSCFM	58831.09

Field Calculations

Raw Data Table

Instrument	ppm or %	Zero	Span	Cylinder Value	Gas Corrected for Calibration	
O_2 (dry)	14.90	0.11	10.76	10.7	**14.86**	dry
CO_2 (wet)	4.75	0.09	8.38	8.3	**4.67**	wet

Moisture	4.75	**Standard CFH**	**3,706,056**
Fuel Factor C	1877	K Standard CFM	61.768
DSCFM	58831		

Results

Start Time	**7:17 AM**
Stop Time	**7:24 AM**
Standard CFH	**3,706,000**
CO_2 %, wet	**4.67**
WAF applied	**0.9900**

MSI / Manitowoc PU
Manitowoc, WI
S20 Boiler Stack
7/23/2013
Run 5-7

Time	$\%O_2$, d	$\%\ CO_2$, w
7:02	14.54	5.041
7:03	14.57	5.039
7:04	14.47	5.171
7:05	14.41	5.155
7:06	14.47	4.949
7:07	15.29	3.507
7:08	16.3	3.729
7:09	15.52	5.115
7:10	14.51	5.055
7:11	14.55	5.167
7:12	14.6	4.13
7:13	15.92	3.904
7:14	15.41	5.109
7:15	14.51	5.042
7:16	14.57	5.066
7:17	14.51	5.134
7:18	14.53	4.975
7:19	14.58	5.126
7:20	14.54	4.735
7:21	15.33	3.941
7:22	15.78	4.625
7:23	14.8	4.898
7:24	15.02	4.7
Average	**14.901**	**4.753**

MSI / Manitowoc PU
Manitowoc, WI
S20 Boiler Stack

7/23/2013
Test 1L **Run 8**
Low Load (80 Klbs/Hr)

Volumetric Flow Rate Data

Number of Sample Points 16

Point Number		Delta p	Sq. root delta p	Temperature	Time
1	A-1	0.020	0.141	211	7:42 AM
2	A-2	0.018	0.134	211	
3	A-3	0.019	0.138	211	
4	A-4	0.019	0.138	211	
5	B-1	0.019	0.138	210	
6	B-2	0.017	0.130	210	
7	B-3	0.018	0.134	210	
8	B-4	0.018	0.134	210	
9	C-1	0.020	0.141	210	
10	C-2	0.020	0.141	210	
11	C-3	0.019	0.138	210	
12	C-4	0.020	0.141	210	
13	D-1	0.017	0.130	209	
14	D-2	0.016	0.126	209	
15	D-3	0.016	0.126	209	
16	D-4	0.016	0.126	209	7:49 AM
Average		0.018	0.135	210	

Moisture Content Data		Flow Rate Data	
Dry Bulb (°F)	211		
Wet Bulb (°F)	108.0	Static Pressure	-0.39
TRA	1.18	Pitot Coefficient	0.831
Vapor Pressure of Water	2.45		
ZT	103.00	Duct Width (in.)	0.00
PM	136.05	Duct Length (in.)	0.00
Barometric Pressure	29.09	Duct Area (ft^2)	0.00
		Stack Diameter (in.)	168.00
Standard Meter Volume		Stack Area (ft^2)	153.94
Moisture Content	4.68		
		Molecular Weight (dry)	29.389
O_2 %	14.797	Molecular Weight (wet)	28.856
CO_2 %	4.985	Stack Pressure	29.061
		Feet per Second	8.486
Standard CFH	3,599,669	Actual CFM	78378.76
K Standard CFH	59.994	DSCFM	57185.83

Field Calculations

Raw Data Table

Instrument	ppm or %	Zero	Span	Cylinder Value	Gas Corrected for Calibration	
O_2 (dry)	14.84	0.11	10.76	10.7	**14.80**	dry
CO_2 (wet)	4.83	0.09	8.37	8.3	**4.75**	wet

Moisture	4.68	**Standard CFH**	**3,599,669**
Fuel Factor C	1877	K Standard CFM	59.994
DSCFM	57186		

Results

Start Time	**7:42 AM**
Stop Time	**7:49 AM**
Standard CFH	**3,600,000**
CO_2 %, wet	**4.75**
WAF applied	**0.9900**

MSI / Manitowoc PU
Manitowoc, WI
S20 Boiler Stack

7/23/2013
Test 1L Run 9
Low Load (80 Klbs/Hr)

Volumetric Flow Rate Data

Number of Sample Points 16

Point Number		Delta p	Sq. root delta p	Temperature	Time
1	A-1	0.017	0.130	212	7:50 AM
2	A-2	0.019	0.138	212	
3	A-3	0.019	0.138	212	
4	A-4	0.018	0.134	212	
5	B-1	0.019	0.138	212	
6	B-2	0.018	0.134	212	
7	B-3	0.018	0.134	212	
8	B-4	0.019	0.138	212	
9	C-1	0.020	0.141	211	
10	C-2	0.020	0.141	211	
11	C-3	0.019	0.138	211	
12	C-4	0.021	0.145	211	
13	D-1	0.017	0.130	210	
14	D-2	0.017	0.130	210	
15	D-3	0.017	0.130	210	
16	D-4	0.018	0.134	210	7:57 AM
Average		0.019	0.136	211	

Moisture Content Data	
Dry Bulb (°F)	212
Wet Bulb (°F)	108.0
TRA	1.18
Vapor Pressure of Water	2.45
ZT	104.00
PM	134.99
Barometric Pressure	29.09
Standard Meter Volume	
Moisture Content	4.65
O_2 %	14.797
CO_2 %	4.991
Standard CFH	3,621,588
K Standard CFH	60.36

Flow Rate Data	
Static Pressure	-0.39
Pitot Coefficient	0.831
Duct Width (in.)	0.00
Duct Length (in.)	0.00
Duct Area (ft^2)	0.00
Stack Diameter (in.)	168.00
Stack Area (ft^2)	153.94
Molecular Weight (dry)	29.39
Molecular Weight (wet)	28.861
Stack Pressure	29.061
Feet per Second	8.554
Actual CFM	79003.15
DSCFM	57556.03

Field Calculations

Raw Data Table

Instrument	ppm or %	Zero	Span	Cylinder Value	Gas Corrected for Calibration	
O_2 (dry)	14.84	0.11	10.76	10.7	**14.80**	dry
CO_2 (wet)	4.83	0.08	8.36	8.3	**4.76**	wet

Moisture	4.65	**Standard CFH**	**3,621,588**
Fuel Factor C	1877	K Standard CFM	60.36
DSCFM	57556		

Results

Start Time	**7:50 AM**
Stop Time	**7:57 AM**
Standard CFH	**3,622,000**
CO_2 %, wet	**4.76**
WAF applied	**0.9900**

MSI / Manitowoc PU
Manitowoc, WI
S20 Boiler Stack

7/23/2013
Test 1L Run 10
Low Load (80 Klbs/Hr)

Volumetric Flow Rate Data

Number of Sample Points 16

Point Number		Delta p	Sq. root delta p	Temperature	Time
1	A-1	0.018	0.134	210	7:58 AM
2	A-2	0.019	0.138	210	
3	A-3	0.019	0.138	210	
4	A-4	0.019	0.138	210	
5	B-1	0.017	0.130	210	
6	B-2	0.018	0.134	210	
7	B-3	0.018	0.134	210	
8	B-4	0.020	0.141	210	
9	C-1	0.019	0.138	211	
10	C-2	0.022	0.148	211	
11	C-3	0.023	0.152	211	
12	C-4	0.021	0.145	211	
13	D-1	0.018	0.134	209	
14	D-2	0.017	0.130	209	
15	D-3	0.016	0.126	209	
16	D-4	0.017	0.130	209	8:06 AM
Average		0.019	0.137	210	

Moisture Content Data	
Dry Bulb (°F)	210
Wet Bulb (°F)	108.0
TRA	1.18
Vapor Pressure of Water	2.45
ZT	102.00
PM	137.11
Barometric Pressure	29.09
Standard Meter Volume	
Moisture Content	4.72
O_2 %	14.797
CO_2 %	4.995
Standard CFH	3,653,496
K Standard CFH	60.892

Flow Rate Data	
Static Pressure	-0.39
Pitot Coefficient	0.831
Duct Width (in.)	0.00
Duct Length (in.)	0.00
Duct Area (ft^2)	0.00
Stack Diameter (in.)	168.00
Stack Area (ft^2)	153.94
Molecular Weight (dry)	29.391
Molecular Weight (wet)	28.854
Stack Pressure	29.061
Feet per Second	8.613
Actual CFM	79550.78
DSCFM	58018.77

Field Calculations

Raw Data Table

Instrument	ppm or %	Zero	Span	Cylinder Value	Gas Corrected for Calibration	
O_2 (dry)	14.84	0.11	10.76	10.7	**14.80**	dry
CO_2 (wet)	4.83	0.08	8.36	8.3	**4.76**	wet

Moisture	4.72	**Standard CFH**	3,653,496
Fuel Factor C	1877	K Standard CFM	60.892
DSCFM	58019		

Results

Start Time	**7:58 AM**
Stop Time	**8:06 AM**
Standard CFH	**3,653,000**
CO_2 %, wet	**4.76**
WAF applied	**0.9900**

MSI / Manitowoc PU
Manitowoc, WI
S20 Boiler Stack
7/23/2013
Run 8-10

Time	$\%O_2$, d	$\%\ CO_2$, w
7:42	14.66	4.958
7:43	14.57	5.065
7:44	15.01	3.617
7:45	16.42	3.507
7:46	16.04	4.917
7:47	14.45	5.355
7:48	14.31	5.228
7:49	14.31	5.276
7:50	14.26	5.297
7:51	14.3	5.197
7:52	14.38	5.274
7:53	14.27	5.185
7:54	15.11	3.524
7:55	16.3	3.997
7:56	15.23	5.128
7:57	14.45	5.109
7:58	14.49	5.182
7:59	14.44	5.006
8:00	15.12	3.698
8:01	16.19	4.06
8:02	15.17	5.21
8:03	14.38	5.209
8:04	14.38	5.298
8:05	14.33	5.239
8:06	14.38	5.156
Average	**14.838**	**4.828**

MSI / Manitowoc PU
Manitowoc, WI
S20 Boiler Stack

7/23/2013
Test 1L **Run 1**
Low "Normal" Load (80 Klbs/Hr)

Field Calculations

Raw Data Table

Instrument	ppm or %	Zero	Span	Cylinder Value	Gas Corrected for Calibration
O_2 (dry)	14.87	0.15	10.83	10.70	**14.75**
CO_2 (wet)	4.87	0.02	8.29	8.30	**4.86**
NOx (wet)	21.73	0.08	50.30	50.40	**21.74**
SO_2 (wet)	43.03	0.17	48.81	49.60	**43.71**
CO (wet)	38.320	0.12	50.33	50.80	**38.65**

Moisture	12.38	**Standard CFH**	
Fuel Factor	1877	K Standard CFM	
DSCFM			

Results

Gases Start	**2:50 PM**
Gases Stop	**3:10 PM**
CO_2 %, wet	**4.9**
NOX ppm, wet	**21.7**
NOx LB/mmBTU	**0.100**
SO_2 ppm, wet	**43.7**
SO_2 LB/mmBTU	**0.280**
CO ppm, wet	**38.7**
CO LB/mmBTU	**0.108**

MSI / Manitowoc PU
Manitowoc, WI
S20 Boiler Stack
7/23/2013
Run 1

Time	SO_2 ppm, w	Nox ppm, w	$\%O_2$, d	% CO_2, w	CO ppm, w
14:50	44.94	22.02	14.88	5.007	37.6
14:51	43.99	22.37	14.73	4.921	38.32
14:52	42.76	21.79	14.8	4.997	41.21
14:53	42.51	21.89	14.8	4.873	38.21
14:54	43.42	21.93	14.9	4.877	40.52
14:55	42.63	21.86	14.98	4.782	37.68
14:56	42.27	21.99	14.98	4.897	39.65
14:57	43.72	22.24	14.84	4.956	38.1
14:58	43.29	21.89	14.87	4.91	39.8
14:59	43.39	21.22	14.84	4.913	38.08
15:00	44.74	22.05	14.87	5.078	37.43
15:01	43.44	20.97	14.76	4.933	39.23
15:02	43.12	21.06	14.85	4.903	37.83
15:03	43.24	20.85	14.91	4.868	38.99
15:04	43.5	21.4	14.92	4.887	38.26
15:05	44.63	21.08	14.92	4.953	37.28
15:06	43.66	21.35	14.92	4.893	36.11
15:07	40.82	20.74	15.01	4.707	36.58
15:08	41.18	21.41	15.01	4.914	37.23
15:09	42.76	21.75	14.91	4.846	38.35
15:10	39.62	24.56	14.57	4.11	38.27
Average	**43.030**	**21.734**	**14.870**	**4.868**	**38.320**

MSI / Manitowoc PU
Manitowoc, WI
S20 Boiler Stack

7/23/2013
Test 1L **Run 2**
Low "Normal" Load (80 Klbs/Hr)

Field Calculations

Raw Data Table

Instrument	ppm or %	Zero	Span	Cylinder Value	Gas Corrected for Calibration
O_2 (dry)	14.54	0.14	10.85	10.70	**14.39**
CO_2 (wet)	4.87	0.05	8.28	8.30	**4.87**
NOx (wet)	21.17	0.11	50.14	50.40	**21.22**
SO_2 (wet)	41.77	0.07	49.10	49.60	**42.19**
CO (wet)	37.228	0.15	49.69	50.80	**38.02**

Moisture	0.15	**Standard CFH**
Fuel Factor	1877	K Standard CFM
DSCFM		

Results

Gases Start	**3:20 PM**
Gases Stop	**3:40 PM**
CO_2 %, wet	**4.9**
NOX ppm, wet	**21.2**
NOx LB/mmBTU	**0.098**
SO_2 ppm, wet	**42.2**
SO_2 LB/mmBTU	**0.270**
CO ppm, wet	**38.0**
CO LB/mmBTU	**0.107**

MSI / Manitowoc PU
Manitowoc, WI
S20 Boiler Stack
7/23/2013
Run 2

Time	SO_2 ppm, w	Nox ppm, w	$\%O_2$, d	% CO_2, w	CO ppm, w
15:20	43.99	21.18	14.17	5.051	35.33
15:21	43.29	20.58	14.07	4.904	34.75
15:22	41.46	21.45	14.29	4.841	35.86
15:23	40.24	21.62	14.29	4.885	36.32
15:24	41.64	21.16	14.24	4.868	37.42
15:25	41.45	21.8	14.31	4.826	35.62
15:26	40.82	20.73	14.35	4.678	38.88
15:27	40.87	20.88	14.49	4.767	36.25
15:28	39.6	21.37	14.56	4.808	36.29
15:29	42.01	21.2	14.4	4.82	36.13
15:30	42.92	20.78	14.49	4.825	37.12
15:31	42.09	20.63	14.52	4.861	37.93
15:32	44.55	20.89	14.54	4.918	38.12
15:33	44.1	20.57	14.54	4.839	38.01
15:34	41.49	21.57	14.56	4.808	36.98
15:35	41.25	21.69	14.6	4.877	38.02
15:36	42.39	21.38	14.52	4.807	38.51
15:37	41.18	21.46	14.95	4.827	36.68
15:38	40.81	21.43	15.13	4.93	39.14
15:39	40.54	21.08	15.07	5.086	39.12
15:40	40.55	21.12	15.26	5.046	39.30
Average	**41.773**	**21.170**	**14.541**	**4.870**	**37.228**

MSI / Manitowoc PU
Manitowoc, WI
S20 Boiler Stack

7/23/2013
Test 1L **Run 3**
Low "Normal" Load (80 Klbs/Hr)

Field Calculations

Raw Data Table

Instrument	ppm or %	Zero	Span	Cylinder Value	Gas Corrected for Calibration
O_2 (dry)	14.67	0.14	10.83	10.7	**14.54**
CO_2 (wet)	5.03	0.05	8.28	8.3	**5.02**
NOx (wet)	20.06	0.08	49.93	50.4	**20.21**
SO_2 (wet)	44.28	0.10	49.81	49.6	**44.08**
CO (wet)	39.414	0.14	49.41	50.80	**40.49**

Moisture	0.15	**Standard CFH**
Fuel Factor	1877	K Standard CFM
DSCFM		

Results

Gases Start	**3:50 PM**
Gases Stop	**4:10 PM**
CO_2 %, wet	**5.0**
NOX ppm, wet	**20.2**
NOx LB/mmBTU	**0.090**
SO_2 ppm, wet	**44.1**
SO_2 LB/mmBTU	**0.274**
CO ppm, wet	**40.5**
CO LB/mmBTU	**0.110**

MSI / Manitowoc PU
Manitowoc, WI
S20 Boiler Stack
7/23/2013
Run 3

Time	SO_2 ppm, w	Nox ppm, w	$\%O_2$, d	$\%\ CO_2$, w	CO ppm, w
15:50	40.39	20.49	14.38	5.12	38.91
15:51	43.26	19.54	14.36	5.171	39.48
15:52	44.77	20.54	14.32	5.146	40.87
15:53	45.08	20.3	14.5	5.092	40.05
15:54	46.22	20.04	14.69	5.2	39.19
15:55	46.84	19.85	14.64	4.996	38.17
15:56	48.18	19.48	14.78	5.111	39.66
15:57	47.45	20.12	14.76	4.97	40.22
15:58	47.58	19.95	14.81	4.897	41.09
15:59	47.97	20.11	14.82	4.985	41.94
16:00	47.07	20.06	14.71	4.866	40.54
16:01	45.14	20.5	14.75	5.04	41.02
16:02	43.53	20.01	14.72	4.993	40.65
16:03	42.35	20.43	14.72	4.975	40.11
16:04	42.01	20.57	14.69	5.077	38.97
16:05	41.91	20.41	14.67	5.102	39.43
16:06	40.63	20.32	14.66	4.931	38.03
16:07	42.87	19.99	14.81	4.987	38.86
16:08	43.57	19.36	14.69	5.054	37.55
16:09	41.56	19.67	14.76	4.903	36.51
16:10	41.41	19.61	14.73	4.97	36.45
Average	**44.276**	**20.064**	**14.665**	**5.028**	**39.414**

MSI / Manitowoc PU
Manitowoc, WI
S20 Boiler Stack

7/23/2013
Test 1L Run 4
Low "Normal" Load (80 Klbs/Hr)

Field Calculations

Raw Data Table

Instrument	ppm or %	Zero	Span	Cylinder Value	Gas Corrected for Calibration
O_2 (dry)	14.63	0.16	10.81	10.7	**14.54**
CO_2 (wet)	5.06	0.04	8.23	8.3	**5.09**
NOx (wet)	19.80	0.07	50.00	50.4	**19.92**
SO_2 (wet)	40.97	0.13	49.84	49.6	**40.76**
CO (wet)	36.961	0.15	49.58	50.80	**37.84**

Moisture	0.15	**Standard CFH**
Fuel Factor	1877	K Standard CFM
DSCFM		

Results

Gases Start	**4:20 PM**
Gases Stop	**4:40 PM**
CO_2 %, wet	**5.1**
NOX ppm, wet	**19.9**
NOx LB/mmBTU	**0.088**
SO_2 ppm, wet	**40.8**
SO_2 LB/mmBTU	**0.249**
CO ppm, wet	**37.8**
CO LB/mmBTU	**0.101**

MSI / Manitowoc PU
Manitowoc, WI
S20 Boiler Stack
7/23/2013
Run 4

Time	SO_2 ppm, w	Nox ppm, w	$\%O_2$, d	% CO_2, w	CO ppm, w
16:20	41.32	19.98	13.36	5.022	38.53
16:21	41.77	19.85	14.44	5.009	37.96
16:22	40.46	19.73	14.72	5.017	35.9
16:23	40.89	19.4	14.73	5.128	34.99
16:24	39.6	19.93	14.72	4.995	34.79
16:25	38.92	20.52	14.73	5.023	35.03
16:26	39.1	19.95	14.74	5.043	37.03
16:27	39.58	20.21	14.73	5.027	35.38
16:28	40.82	19.45	14.69	5.078	36.87
16:29	39.62	19.99	14.71	5.093	36.9
16:30	39.8	19.69	14.69	5.026	37.94
16:31	39.92	19.69	14.77	5.044	36.76
16:32	40.36	19.41	14.7	5.055	38.21
16:33	40.01	19.92	14.74	5.065	36.55
16:34	41.64	19.78	14.65	5.06	35.5
16:35	40.92	19.64	14.78	5.015	38.82
16:36	41.72	19.78	14.72	5.098	37.61
16:37	42.87	20.02	14.63	5.177	38.91
16:38	44.15	19.58	14.62	5.119	38.14
16:39	44.36	19.63	14.59	5.129	38.25
16:40	42.57	19.69	14.7	5.097	36.12
Average	**40.971**	**19.802**	**14.627**	**5.063**	**36.961**

MSI / Manitowoc PU
Manitowoc, WI
S20 Boiler Stack

7/23/2013
Test 1L **Run 5**
Low "Normal" Load (80 Klbs/Hr)

Field Calculations

Raw Data Table

Instrument	ppm or %	Zero	Span	Cylinder Value	Gas Corrected for Calibration
O_2 (dry)	14.76	0.16	10.81	10.7	**14.67**
CO_2 (wet)	5.00	0.04	8.22	8.3	**5.03**
NOx (wet)	19.54	0.10	50.05	50.4	**19.61**
SO_2 (wet)	40.34	0.10	49.69	49.6	**40.25**
CO (wet)	35.466	0.16	49.79	50.80	**36.14**

Moisture	0.15	**Standard CFH**	
Fuel Factor	1877	K Standard CFM	
DSCFM			

Results

Gases Start	**4:50 PM**
Gases Stop	**5:10 PM**
CO_2 %, wet	**5.0**
NOX ppm, wet	**19.6**
NOx LB/mmBTU	**0.087**
SO_2 ppm, wet	**40.2**
SO_2 LB/mmBTU	**0.249**
CO ppm, wet	**36.1**
CO LB/mmBTU	**0.098**

MPU03328

MSI / Manitowoc PU
Manitowoc, WI
S20 Boiler Stack
7/23/2013
Run 5

Time	SO_2 ppm, w	Nox ppm, w	$\%O_2$, d	% CO_2, w	CO ppm, w
16:50	39.24	19.61	14.74	5.03	34.3
16:51	39.18	19.83	14.75	5.135	33.36
16:52	38.27	20.14	14.67	5.018	36.2
16:53	38.34	20.35	14.71	5.089	36.55
16:54	40.59	19.58	14.65	5.039	36.59
16:55	40.62	19.56	14.78	5.114	36.48
16:56	40.57	19.9	14.71	4.945	34.65
16:57	41.07	18.66	14.81	4.942	35.15
16:58	42	19.65	14.84	5.116	33.46
16:59	42.5	19.11	14.68	4.932	36.79
17:00	40.37	19.38	14.86	5.026	36.66
17:01	40.15	19.33	14.74	5.082	36.52
17:02	39.51	18.93	14.67	5.002	34.35
17:03	38.96	18.91	14.8	4.94	36.28
17:04	38.98	19.4	14.84	4.927	34.13
17:05	39.66	19.24	14.84	5.054	36.07
17:06	41.8	19.12	14.71	5.069	35.48
17:07	41.28	19.49	14.69	5.069	34.64
17:08	41.57	18.72	14.74	4.975	34.98
17:09	40.89	18.92	14.88	4.861	36.56
17:10	41.51	22.42	14.81	4.551	35.59
Average	**40.336**	**19.536**	**14.758**	**4.996**	**35.466**

MSI / Manitowoc PU
Manitowoc, WI
S20 Boiler Stack

7/23/2013
Test 1L **Run 6**
Low "Normal" Load (80 Klbs/Hr)

Field Calculations

Raw Data Table

Instrument	ppm or %	Zero	Span	Cylinder Value	Gas Corrected for Calibration
O_2 (dry)	14.64	0.14	10.79	10.7	**14.57**
CO_2 (wet)	5.18	0.07	8.24	8.3	**5.19**
NOx (wet)	19.48	0.13	49.87	50.4	**19.61**
SO_2 (wet)	40.34	0.07	49.24	49.6	**40.63**
CO (wet)	35.756	0.16	49.86	50.80	**36.39**

Moisture	0.15	**Standard CFH**
Fuel Factor	1877	K Standard CFM
DSCFM		

Results

Gases Start	**5:20 PM**
Gases Stop	**5:40 PM**
CO_2 %, wet	**5.2**
NOX ppm, wet	**19.6**
NOx LB/mmBTU	**0.085**
SO_2 ppm, wet	**40.6**
SO_2 LB/mmBTU	**0.244**
CO ppm, wet	**36.4**
CO LB/mmBTU	**0.096**

MSI / Manitowoc PU
Manitowoc, WI
S20 Boiler Stack
7/23/2013
Run 6

Time	SO_2 ppm, w	Nox ppm, w	$\%O_2$, d	% CO_2, w	CO ppm, w
17:20	43.19	19.47	14.61	5.259	34.47
17:21	42.36	19.07	14.54	5.055	34.84
17:22	41.01	19.9	14.68	5.154	32.91
17:23	40.5	19.52	14.64	5.089	37.57
17:24	40.33	19.09	14.72	5.029	35.59
17:25	39.39	19.2	14.74	5.091	34.93
17:26	40.8	19.01	14.8	5.104	34.55
17:27	41.98	19.13	14.64	5.013	35.17
17:28	41.9	19.66	14.74	5.104	33.66
17:29	41.17	19.72	14.71	5.055	36.19
17:30	41.29	19.6	14.69	5.088	34.97
17:31	38.67	19.19	14.7	5.218	35.97
17:32	37.99	19.32	14.76	5.034	34.68
17:33	37.18	19.62	14.83	5.109	35.57
17:34	37.93	19.57	14.68	5.314	35.71
17:35	39.27	20.15	14.58	5.356	36.34
17:36	39.06	19.84	14.55	5.293	36.92
17:37	40.17	19.83	14.59	5.343	35.91
17:38	39.98	19.83	14.57	5.351	38.63
17:39	41.61	19.23	14.54	5.306	38.48
17:40	41.37	19.14	14.22	5.34	37.82
Average	**40.340**	**19.480**	**14.644**	**5.176**	**35.756**

MSI / Manitowoc PU
Manitowoc, WI
S20 Boiler Stack

7/23/2013
Test 1L **Run 7**
Low "Normal" Load (80 Klbs/Hr)

Field Calculations

Raw Data Table

Instrument	ppm or %	Zero	Span	Cylinder Value	Gas Corrected for Calibration
O_2 (dry)	14.17	0.14	10.81	10.7	**14.07**
CO_2 (wet)	5.17	0.07	8.26	8.3	**5.17**
NOx (wet)	19.40	0.13	49.58	50.4	**19.64**
SO_2 (wet)	41.77	0.08	48.83	49.6	**42.43**
CO (wet)	36.489	0.14	49.64	50.80	**37.31**

Moisture	0.15	**Standard CFH**
Fuel Factor	1877	K Standard CFM
DSCFM	0	

Results

Gases Start	**5:50 PM**
Gases Stop	**6:10 PM**
CO_2 %, wet	**5.2**
NOX ppm, wet	**19.6**
NOx LB/mmBTU	**0.085**
SO_2 ppm, wet	**42.4**
SO_2 LB/mmBTU	**0.256**
CO ppm, wet	**37.3**
CO LB/mmBTU	**0.098**

MSI / Manitowoc PU
Manitowoc, WI
S20 Boiler Stack
7/23/2013
Run 7

Time	SO_2 ppm, w	Nox ppm, w	$\%O_2$, d	% CO_2, w	CO ppm, w
17:50	43.3	18.77	14.09	5.265	38.8
17:51	42.61	18.8	14.16	5.149	35.8
17:52	43.16	18.84	14.18	5.23	36.62
17:53	43.52	19.48	14.16	5.307	36.18
17:54	40.14	19.36	14.08	5.227	37.23
17:55	38.99	19.4	14.16	5.162	36.18
17:56	41.93	19.03	14.08	5.174	34.23
17:57	40.97	19.45	14.11	5.189	33.16
17:58	41.84	19.14	14.1	5.154	36.58
17:59	42.74	19.42	14.09	5.205	37.12
18:00	43.05	19.91	14.04	5.186	36.7
18:01	42.49	19.16	14.06	5.117	35.45
18:02	42.03	19.57	14.25	4.96	35.84
18:03	42.59	19.53	14.26	5.089	38.65
18:04	42.84	20.23	14.19	5.19	38.42
18:05	41.06	20.09	14.12	5.178	38.08
18:06	40.51	19.63	14.24	5.191	36.78
18:07	41.42	19.52	14.25	5.064	35
18:08	41.26	19.14	14.39	5.23	36.02
18:09	40.41	19.58	14.24	5.176	37.53
18:10	40.41	19.4	14.32	5.127	35.89
Average	**41.775**	**19.402**	**14.170**	**5.170**	**36.489**

MSI / Manitowoc PU
Manitowoc, WI
S20 Boiler Stack

7/23/2013
Test 1L **Run 8**
Low "Normal" Load (80 Klbs/Hr)

Field Calculations

Raw Data Table

Instrument	ppm or %	Zero	Span	Cylinder Value	Gas Corrected for Calibration
O_2 (dry)	14.33	0.15	10.80	10.7	**14.25**
CO_2 (wet)	5.09	0.03	8.25	8.3	**5.12**
NOx (wet)	19.71	0.14	49.61	50.4	**19.94**
SO_2 (wet)	41.93	0.12	49.11	49.6	**42.33**
CO (wet)	35.670	0.16	49.77	50.80	**36.37**

Moisture	0.15	**Standard CFH**	
Fuel Factor	1877	K Standard CFM	
DSCFM			

Results

Gases Start	**6:20 PM**
Gases Stop	**6:40 PM**
CO_2 %, wet	**5.1**
NOX ppm, wet	**19.9**
NOx LB/mmBTU	**0.087**
SO_2 ppm, wet	**42.3**
SO_2 LB/mmBTU	**0.258**
CO ppm, wet	**36.4**
CO LB/mmBTU	**0.097**

MSI / Manitowoc PU
Manitowoc, WI
S20 Boiler Stack
7/23/2013
Run 8

Time	SO_2 ppm, w	Nox ppm, w	$\%O_2$, d	% CO_2, w	CO ppm, w
18:20	42.6	19.17	14.22	5.008	36.91
18:21	42.65	19.63	14.32	5.148	37.49
18:22	43.66	19.36	14.3	5.174	35.12
18:23	41.97	19.1	14.27	5.027	35.1
18:24	41.88	19.62	14.38	5.107	37.22
18:25	44.91	19.02	14.32	5.117	36.26
18:26	46.07	19.41	14.33	5.079	36.13
18:27	44.91	19.82	14.29	5.058	36.35
18:28	42.83	20.12	14.38	5.049	37.94
18:29	39.53	19.34	14.37	5.008	35.59
18:30	40.55	20.33	14.38	5.171	35.04
18:31	42.01	19.29	14.31	5.172	35.98
18:32	41.21	19.02	14.31	5.043	35.76
18:33	40.56	19.67	14.36	5.174	37.11
18:34	38.85	19.62	14.28	5.1	34.36
18:35	41.54	19.38	14.33	4.989	32.31
18:36	40.43	19.86	14.41	5.177	35.12
18:37	42.39	19.15	14.26	5.056	33.49
18:38	40.6	19.74	14.38	5.014	33.88
18:39	39.35	19.89	14.44	5.104	35.7
18:40	41.94	23.45	14.31	5.144	36.21
Average	**41.926**	**19.714**	**14.331**	**5.091**	**35.670**

MSI / Manitowoc PU
Manitowoc, WI
S20 Boiler Stack

7/23/2013
Test 1L Run 9
Low "Normal" Load (80 Klbs/Hr)

Field Calculations

Raw Data Table

Instrument	ppm or %	Zero	Span	Cylinder Value	Gas Corrected for Calibration
O_2 (dry)	14.51	0.14	10.75	10.7	**14.49**
CO_2 (wet)	5.13	0.03	8.25	8.3	**5.16**
NOx (wet)	20.06	0.14	49.58	50.4	**20.32**
SO_2 (wet)	42.08	0.18	49.25	49.6	**42.35**
CO (wet)	35.261	0.15	50.04	50.80	**35.75**

Moisture	0.15	**Standard CFH**
Fuel Factor	1877	K Standard CFM
DSCFM		

Results

Gases Start	**6:50 PM**
Gases Stop	**7:10 PM**
CO_2 %, wet	**5.2**
NOX ppm, wet	**20.3**
NOx LB/mmBTU	**0.088**
SO_2 ppm, wet	**42.3**
SO_2 LB/mmBTU	**0.256**
CO ppm, wet	**35.8**
CO LB/mmBTU	**0.095**

MSI / Manitowoc PU
Manitowoc, WI
S20 Boiler Stack
7/23/2013
Run 9

Time	SO_2 ppm, w	Nox ppm, w	$\%O_2$, d	% CO_2, w	CO ppm, w
18:50	41.02	19.82	14.49	5.077	32.49
18:51	40.05	20.3	14.52	5.113	33.1
18:52	40.92	20.38	14.45	5.179	36.15
18:53	45.08	19.83	14.46	5.137	36.87
18:54	45.64	20.03	14.49	5.104	34.34
18:55	42.78	20.34	14.48	5.18	35.54
18:56	42.51	20.17	14.42	5.192	34.53
18:57	43.38	19.78	14.5	5.103	35.42
18:58	42.71	20.7	14.5	5.078	36.62
18:59	40.62	19.87	14.63	5.005	36.41
19:00	40.92	19.67	14.62	5.041	34.07
19:01	42.36	20.05	14.57	5.151	35.69
19:02	44.26	20.1	14.52	5.174	37.7
19:03	42.35	20.24	14.43	5.193	36.69
19:04	43.33	19.28	14.48	5.116	36.85
19:05	43.13	20.1	14.52	5.169	34.49
19:06	40.53	19.81	14.52	5.094	34.92
19:07	42.34	19.88	14.51	5.161	34.96
19:08	39.36	20.4	14.52	5.164	35.56
19:09	39.69	19.84	14.49	5.123	33.72
19:10	40.61	20.76	14.54	5.234	34.37
Average	**42.076**	**20.064**	**14.508**	**5.133**	**35.261**

MSI / Manitowoc PU
Manitowoc, WI
S20 Boiler Stack

7/23/2013
Test 1L **Run 10**
Low "Normal" Load (80 Klbs/Hr)

Field Calculations

Raw Data Table

Instrument	ppm or %	Zero	Span	Cylinder Value	Gas Corrected for Calibration
O_2 (dry)	14.22	0.15	10.78	10.7	**14.16**
CO_2 (wet)	5.16	0.02	8.24	8.3	**5.20**
NOx (wet)	20.15	0.13	49.58	50.4	**20.41**
SO_2 (wet)	41.87	0.17	48.97	49.6	**42.38**
CO (wet)	36.271	0.13	49.97	50.80	**36.84**

Moisture	0.15	**Standard CFH**
Fuel Factor	1877	K Standard CFM
DSCFM		

Results

Gases Start	**7:20 PM**
Gases Stop	**7:40 PM**
CO_2 %, wet	**5.2**
NOX ppm, wet	**20.4**
NOx LB/mmBTU	**0.088**
SO_2 ppm, wet	**42.4**
SO_2 LB/mmBTU	**0.254**
WAF applied	**0.9900**
CO ppm, wet	**36.8**
CO LB/mmBTU	**0.097**

MSI / Manitowoc PU
Manitowoc, WI
S20 Boiler Stack
7/23/2013
Run 10

Time	SO_2 ppm, w	Nox ppm, w	$\%O_2$, d	% CO_2, w	CO ppm, w
19:20	42.31	20.21	14.15	5.171	38.31
19:21	43.6	19.68	14.23	5.066	36.86
19:22	43.33	20.28	14.18	5.178	37.1
19:23	40.14	19.68	14.21	5.053	34.84
19:24	42.25	20.34	14.2	5.228	36.49
19:25	44.55	19.83	14.16	5.086	37.82
19:26	44.65	20.05	14.28	5.07	37.08
19:27	41.87	20.21	14.27	5.073	35.51
19:28	43.74	19.91	14.24	5.182	36.5
19:29	45.8	20.06	14.16	5.121	35.73
19:30	42.63	20.33	14.27	5.173	38.16
19:31	40.23	20.41	14.28	5.162	36.66
19:32	38.52	20.63	14.22	5.27	36.07
19:33	40.08	20.15	14.13	5.199	36.13
19:34	39.98	20.09	14.21	5.134	33.84
19:35	38.76	20.25	14.22	5.236	34
19:36	40.63	20.16	14.28	5.169	35.4
19:37	39.4	20.15	14.21	5.225	36.41
19:38	39.96	20.21	14.18	5.214	37.58
19:39	43.09	20.4	14.2	5.17	35.88
19:40	43.71	20.06	14.24	5.219	35.33
Average	**41.868**	**20.147**	**14.215**	**5.162**	**36.271**

APPENDIX C

FIELD DATA SHEETS

Interpoll Laboratories
(763) 786-6020
EPA Method 2 Field Data Sheet

Job	MSI / Manitowoc PU				
Source	S20 Boiler Stack				
Test	1H	Run	1	Date	7/23/2013
Stack Diameter (in.)	168				
Dry Bulb (°F)	240	Wet Bulb (°F)	113		
Moisture Content (%)	5.12				
Monometer	Expanded				
Barometric Pressure	29.09				
Static Pressure +/-	-0.39				
Operators	Aaron Wilson / Nate Beinemann				
Pitot No.	04-5+-P1	Pitot Coeff.	0.8310		

Cross-section View	Elevation View

High Load (190 Klbs/Hr)

Traverse Point Number	Fraction of Diameter	Distance From Stack Wall (in.)	Distance From End of Port (in.)	Velocity	Temperature of Gas (°F)
		Port Length (in.):	14.00	Start Time:	10:40 AM
A-1	0.032	5.38	19.38	0.033	240
A-2	0.105	17.64	31.64	0.032	240
A-3	0.194	32.59	46.59	0.034	240
A-4	0.323	54.26	68.26	0.039	240
B-1				0.037	241
B-2				0.033	241
B-3				0.032	241
B-4				0.031	241
C-1				0.035	243
C-2				0.033	243
C-3				0.031	243
C-4				0.030	243
D-1				0.036	240
D-2				0.033	240
D-3				0.030	240
D-4				0.031	240
Digital Numbers Used:		85 / 138		End Time:	10:46 AM

MPU03341

Interpoll Laboratories
(763) 786-6020
EPA Method 2 Field Data Sheet

Job	MSI / Manitowoc PU				
Source	S20 Boiler Stack				
Test	1H	Run 2	Date	7/23/2013	
Stack Diameter (in.)	168				
Dry Bulb (°F)	246	Wet Bulb (°F)	113		
Moisture Content (%)	4.90				
Monometer	Expanded				
Barometric Pressure	29.09				
Static Pressure +/-	-0.39				
Operators	Aaron Wilson / Nate Beinemann				
Pitot No.	04-5+-P1	Pitot Coeff.	0.8310		

Cross-section	Elevation
View	View

High Load (190 Klbs/Hr)

Traverse Point Number	Fraction of Diameter	Distance From Stack Wall (in.)	Distance From End of Port (in.)	Velocity	Temperature of Gas (°F)
		Port Length (in.):	14.00	Start Time:	10:47 AM
A-1	0.032	5.38	19.38	0.029	246
A-2	0.105	17.64	31.64	0.033	246
A-3	0.194	32.59	46.59	0.031	246
A-4	0.323	54.26	68.26	0.034	246
B-1				0.031	247
B-2				0.032	247
B-3				0.034	247
B-4				0.033	247
C-1				0.035	247
C-2				0.034	247
C-3				0.037	247
C-4				0.038	247
D-1				0.034	247
D-2				0.035	247
D-3				0.037	247
D-4				0.036	247
Digital Numbers Used:		85 / 138		End Time:	10:53 AM

Interpoll Laboratories
(763) 786-6020

EPA Method 2 Field Data Sheet

Job	MSI / Manitowoc PU				
Source	S20 Boiler Stack				
Test	1H	Run 3	Date	7/23/2013	
Stack Diameter (in.)	168				
Dry Bulb (°F)	247	Wet Bulb (°F)	113		
Moisture Content (%)	4.86				
Monometer	Expanded				
Barometric Pressure	29.09				
Static Pressure +/-	-0.40				
Operators	Aaron Wilson / Nate Beinemann				
Pitot No.	04-5+-P1	Pitot Coeff.	0.8310		

Cross-section View	Elevation View

High Load (190 Klbs/Hr)

Traverse Point Number	Fraction of Diameter	Distance From Stack Wall (in.)	Distance From End of Port (in.)	Velocity	Temperature of Gas (°F)
		Port Length (in.):	14.00	Start Time:	10:54 AM
A-1	0.032	5.38	19.38	0.034	247
A-2	0.105	17.64	31.64	0.038	247
A-3	0.194	32.59	46.59	0.036	247
A-4	0.323	54.26	68.26	0.032	247
B-1				0.034	247
B-2				0.035	247
B-3				0.038	247
B-4				0.031	247
C-1				0.032	246
C-2				0.034	246
C-3				0.035	246
C-4				0.036	246
D-1				0.035	246
D-2				0.031	246
D-3				0.032	246
D-4				0.033	246
Digital Numbers Used:		85 / 138		End Time:	11:00 AM

Interpoll Laboratories
(763) 786-6020

EPA Method 2 Field Data Sheet

Job	MSI / Manitowoc PU				
Source	S20 Boiler Stack				
Test	1H	Run 4	Date	7/23/2013	
Stack Diameter (in.)	168				
Dry Bulb (°F)	242	Wet Bulb (°F)	114		
Moisture Content (%)	5.36				
Monometer	Expanded				
Barometric Pressure	29.09				
Static Pressure +/-	-0.41				
Operators	Aaron Wilson / Nate Beinemann				
Pitot No.	04-5+-P1	Pitot Coeff.	0.8310		

Cross-section	Elevation
View	View

High Load (190 Klbs/Hr)

Traverse Point Number	Fraction of Diameter	Distance From Stack Wall (in.)	Distance From End of Port (in.)	Velocity	Temperature of Gas (°F)
		Port Length (in.):	14.00	Start Time:	11:30 AM
A-1	0.032	5.38	19.38	0.032	242
A-2	0.105	17.64	31.64	0.033	242
A-3	0.194	32.59	46.59	0.028	242
A-4	0.323	54.26	68.26	0.030	242
B-1				0.032	244
B-2				0.034	244
B-3				0.032	244
B-4				0.035	244
C-1				0.031	244
C-2				0.033	244
C-3				0.034	244
C-4				0.035	244
D-1				0.033	243
D-2				0.034	243
D-3				0.035	243
D-4				0.036	243
Digital Numbers Used:		85 / 138		End Time:	11:36 AM

Interpoll Laboratories
(763) 786-6020

EPA Method 2 Field Data Sheet

Job	MSI / Manitowoc PU				
Source	S20 Boiler Stack				
Test	1H	Run 5	Date	7/23/2013	
Stack Diameter (in.)	168				
Dry Bulb (°F)	243	Wet Bulb (°F)	114		
Moisture Content (%)	5.33				
Monometer	Expanded				
Barometric Pressure	29.09				
Static Pressure +/-	-0.39				
Operators	Aaron Wilson / Nate Beinemann				
Pitot No.	04-5+-P1	Pitot Coeff.	0.8310		

Cross-section View	Elevation View

High Load (190 Klbs/Hr)

Traverse Point Number	Fraction of Diameter	Distance From Stack Wall (in.)	Distance From End of Port (in.)	Velocity	Temperature of Gas (°F)
		Port Length (in.):	14.00	Start Time:	11:37 AM
A-1	0.032	5.38	19.38	0.035	243
A-2	0.105	17.64	31.64	0.033	243
A-3	0.194	32.59	46.59	0.035	243
A-4	0.323	54.26	68.26	0.032	243
B-1				0.034	244
B-2				0.038	244
B-3				0.037	244
B-4				0.035	244
C-1				0.034	244
C-2				0.035	244
C-3				0.036	244
C-4				0.034	244
D-1				0.028	244
D-2				0.034	244
D-3				0.036	244
D-4				0.036	244
Digital Numbers Used:		85 / 138		End Time:	11:43 AM

Interpoll Laboratories
(763) 786-6020

EPA Method 2 Field Data Sheet

Job	MSI / Manitowoc PU				
Source	S20 Boiler Stack				
Test	1H	Run	6	Date	7/23/2013
Stack Diameter (in.)	168				
Dry Bulb (°F)	244	Wet Bulb (°F)	114		
Moisture Content (%)	5.29				
Monometer	Expanded				
Barometric Pressure	29.09				
Static Pressure +/-	-0.41				
Operators	Aaron Wilson / Nate Beinemann				
Pitot No.	04-5+-P1	Pitot Coeff.	0.8310		

Cross-section View	Elevation View

High Load (190 Klbs/Hr)

Traverse Point Number	Fraction of Diameter	Distance From Stack Wall (in.)	Distance From End of Port (in.)	Velocity	Temperature of Gas (°F)
		Port Length (in.):	14.00	Start Time:	11:44 AM
A-1	0.032	5.38	19.38	0.031	244
A-2	0.105	17.64	31.64	0.033	244
A-3	0.194	32.59	46.59	0.030	244
A-4	0.323	54.26	68.26	0.029	244
B-1				0.027	245
B-2				0.034	245
B-3				0.034	245
B-4				0.032	245
C-1				0.031	244
C-2				0.034	244
C-3				0.035	244
C-4				0.033	244
D-1				0.034	244
D-2				0.038	244
D-3				0.035	244
D-4				0.035	244
Digital Numbers Used:		85 / 138		End Time:	11:50 AM

Interpoll Laboratories
(763) 786-6020

EPA Method 2 Field Data Sheet

Job	MSI / Manitowoc PU				
Source	S20 Boiler Stack				
Test	1H	Run 7	Date	7/23/2013	
Stack Diameter (in.)	168				
Dry Bulb (°F)	243	Wet Bulb (°F)	114		
Moisture Content (%)	5.33				
Monometer	Expanded				
Barometric Pressure	29.09				
Static Pressure +/-	-0.43				
Operators	Aaron Wilson / Nate Beinemann				
Pitot No.	04-5+-P1	Pitot Coeff.	0.8310		

Cross-section View	Elevation View

High Load (190 Klbs/Hr)

Traverse Point Number	Fraction of Diameter	Distance From Stack Wall (in.)	Distance From End of Port (in.)	Velocity	Temperature of Gas (°F)
		Port Length (in.):	14.00	Start Time:	11:51 AM
A-1	0.032	5.38	19.38	0.034	243
A-2	0.105	17.64	31.64	0.031	243
A-3	0.194	32.59	46.59	0.032	243
A-4	0.323	54.26	68.26	0.031	243
B-1				0.033	243
B-2				0.037	243
B-3				0.038	243
B-4				0.038	243
C-1				0.033	244
C-2				0.036	244
C-3				0.036	244
C-4				0.031	244
D-1				0.035	244
D-2				0.036	244
D-3				0.037	244
D-4				0.033	244
Digital Numbers Used:		85 / 138		End Time:	11:57 AM

Interpoll Laboratories
(763) 786-6020

EPA Method 2 Field Data Sheet

Job	MSI / Manitowoc PU			
Source	S20 Boiler Stack			
Test	1H	Run 8	Date	7/23/2013
Stack Diameter (in.)	168			
Dry Bulb (°F)	242	Wet Bulb (°F)	114	
Moisture Content (%)	5.36			
Monometer	Expanded			
Barometric Pressure	29.09			
Static Pressure +/-	-0.44			
Operators	Aaron Wilson / Nate Beinemann			
Pitot No.	04-5+-P1	Pitot Coeff.	0.8310	

Cross-section View	Elevation View

High Load (190 Klbs/Hr)

Traverse Point Number	Fraction of Diameter	Distance From Stack Wall (in.)	Distance From End of Port (in.)	Velocity	Temperature of Gas (°F)
		Port Length (in.):	14.00	Start Time:	11:58 AM
A-1	0.032	5.38	19.38	0.034	242
A-2	0.105	17.64	31.64	0.030	242
A-3	0.194	32.59	46.59	0.033	242
A-4	0.323	54.26	68.26	0.028	242
B-1				0.034	241
B-2				0.033	241
B-3				0.037	241
B-4				0.039	241
C-1				0.038	243
C-2				0.036	243
C-3				0.037	243
C-4				0.035	243
D-1				0.037	243
D-2				0.035	243
D-3				0.038	243
D-4				0.036	243
Digital Numbers Used:		85 / 138		End Time:	12:04 PM

Interpoll Laboratories
(763) 786-6020

EPA Method 2 Field Data Sheet

Job	MSI / Manitowoc PU				
Source	S20 Boiler Stack				
Test	1H	Run	9	Date	7/23/2013
Stack Diameter (in.)	168				
Dry Bulb (°F)	241	Wet Bulb (°F)	114		
Moisture Content (%)	5.40				
Monometer	Expanded				
Barometric Pressure	29.09				
Static Pressure +/-	-0.40				
Operators	Aaron Wilson / Nate Beinemann				
Pitot No.	04-5+-P1	Pitot Coeff.	0.8310		

Cross-section View	Elevation View

High Load (190 Klbs/Hr)

Traverse Point Number	Fraction of Diameter	Distance From Stack Wall (in.)	Distance From End of Port (in.)	Velocity	Temperature of Gas (°F)
		Port Length (in.):	14.00	Start Time:	12:05 PM
A-1	0.032	5.38	19.38	0.031	241
A-2	0.105	17.64	31.64	0.029	241
A-3	0.194	32.59	46.59	0.030	241
A-4	0.323	54.26	68.26	0.028	241
B-1				0.036	243
B-2				0.038	243
B-3				0.039	243
B-4				0.038	243
C-1				0.035	242
C-2				0.039	242
C-3				0.033	242
C-4				0.031	242
D-1				0.034	242
D-2				0.037	242
D-3				0.038	242
D-4				0.038	242
Digital Numbers Used:		85 / 138		End Time:	12:11 PM

Interpoll Laboratories
(763) 786-6020

EPA Method 2 Field Data Sheet

Job	MSI / Manitowoc PU				
Source	S20 Boiler Stack				
Test	1H	Run 10	Date	7/23/2013	
Stack Diameter (in.)	168				
Dry Bulb (°F)	243	Wet Bulb (°F)	114		
Moisture Content (%)	5.33				
Monometer	Expanded				
Barometric Pressure	29.09				
Static Pressure +/-	-0.39				
Operators	Aaron Wilson / Nate Beinemann				
Pitot No.	04-5+-P1	Pitot Coeff.	0.8310		

Cross-section View	Elevation View

High Load (190 Klbs/Hr)

Traverse Point Number	Fraction of Diameter	Distance From Stack Wall (in.)	Distance From End of Port (in.)	Velocity	Temperature of Gas (°F)
		Port Length (in.):	14.00	Start Time:	12:12 PM
A-1	0.032	5.38	19.38	0.030	243
A-2	0.105	17.64	31.64	0.032	243
A-3	0.194	32.59	46.59	0.030	243
A-4	0.323	54.26	68.26	0.032	243
B-1				0.031	244
B-2				0.033	244
B-3				0.038	244
B-4				0.033	244
C-1				0.037	245
C-2				0.037	245
C-3				0.038	245
C-4				0.033	245
D-1				0.034	244
D-2				0.035	244
D-3				0.036	244
D-4				0.036	244
Digital Numbers Used:		85 / 138		End Time:	12:18 PM

Interpoll Laboratories
(763) 786-6020
EPA Method 2 Field Data Sheet

Job	MSI / Manitowoc PU				
Source	S20 Boiler Stack				
Test	1L	Run 1	Date	7/23/2013	
Stack Diameter (in.)	168				
Dry Bulb (°F)	205	Wet Bulb (°F)	108		
Moisture Content (%)	4.90				
Monometer	Expanded				
Barometric Pressure	29.09				
Static Pressure +/-	-0.39				
Operators	Aaron Wilson / Nate Beinemann				
Pitot No.	04-5+-P1	Pitot Coeff.	0.8310		

Cross-section View	Elevation View

Low Load (80 Klbs/Hr)

Traverse Point Number	Fraction of Diameter	Distance From Stack Wall (in.)	Distance From End of Port (in.)	Velocity	Temperature of Gas (°F)
		Port Length (in.):	14.00	Start Time:	5:15 AM
A-1	0.032	5.38	19.38	0.018	205
A-2	0.105	17.64	31.64	0.016	205
A-3	0.194	32.59	46.59	0.016	205
A-4	0.323	54.26	68.26	0.019	205
B-1				0.021	204
B-2				0.024	204
B-3				0.024	204
B-4				0.022	204
C-1				0.021	205
C-2				0.025	205
C-3				0.024	205
C-4				0.022	205
D-1				0.016	206
D-2				0.019	206
D-3				0.017	206
D-4				0.015	206
Digital Numbers Used:		85 / 138		End Time:	5:25 AM

Interpoll Laboratories
(763) 786-6020
EPA Method 2 Field Data Sheet

Job	MSI / Manitowoc PU				
Source	S20 Boiler Stack				
Test	1L	Run 2	Date	7/23/2013	
Stack Diameter (in.)	168				
Dry Bulb (°F)	206	Wet Bulb (°F)	108		
Moisture Content (%)	4.86				
Monometer	Expanded				
Barometric Pressure	29.09				
Static Pressure +/-	-0.39				
Operators	Aaron Wilson / Nate Beinemann				
Pitot No.	04-5+-P1	Pitot Coeff.	0.8310		

Cross-section View	Elevation View

Low Load (80 Klbs/Hr)

Traverse Point Number	Fraction of Diameter	Distance From Stack Wall (in.)	Distance From End of Port (in.)	Velocity	Temperature of Gas (°F)
		Port Length (in.):	14.00	Start Time:	6:20 AM
A-1	0.032	5.38	19.38	0.018	206
A-2	0.105	17.64	31.64	0.019	206
A-3	0.194	32.59	46.59	0.017	206
A-4	0.323	54.26	68.26	0.016	206
B-1				0.022	207
B-2				0.023	207
B-3				0.024	207
B-4				0.021	207
C-1				0.017	205
C-2				0.019	205
C-3				0.018	205
C-4				0.019	205
D-1				0.022	205
D-2				0.021	205
D-3				0.018	205
D-4				0.017	205
Digital Numbers Used:		85 / 138		End Time:	6:30 AM

Interpoll Laboratories
(763) 786-6020

EPA Method 2 Field Data Sheet

Job	MSI / Manitowoc PU				
Source	S20 Boiler Stack				
Test	1L	Run	3	Date	7/23/2013
Stack Diameter (in.)	168				
Dry Bulb (°F)	207	Wet Bulb (°F)	108		
Moisture Content (%)	4.83				
Monometer	Expanded				
Barometric Pressure	29.09				
Static Pressure +/-	-0.40				
Operators	Aaron Wilson / Nate Beinemann				
Pitot No.	04-5+-P1	Pitot Coeff.	0.8310		

Cross-section View	Elevation View

Low Load (80 Klbs/Hr)

Traverse Point Number	Fraction of Diameter	Distance From Stack Wall (in.)	Distance From End of Port (in.)	Velocity	Temperature of Gas (°F)
		Port Length (in.):	14.00	Start Time:	6:31 AM
A-1	0.032	5.38	19.38	0.014	207
A-2	0.105	17.64	31.64	0.016	207
A-3	0.194	32.59	46.59	0.016	207
A-4	0.323	54.26	68.26	0.015	207
B-1				0.024	207
B-2				0.021	207
B-3				0.022	207
B-4				0.020	207
C-1				0.025	206
C-2				0.023	206
C-3				0.022	206
C-4				0.021	206
D-1				0.020	207
D-2				0.019	207
D-3				0.018	207
D-4				0.017	207
Digital Numbers Used:		85 / 138		End Time:	6:38 AM

Interpoll Laboratories
(763) 786-6020

EPA Method 2 Field Data Sheet

Job	MSI / Manitowoc PU				
Source	S20 Boiler Stack				
Test	1L	Run 4	Date	7/23/2013	Cross-section View / Elevation View
Stack Diameter (in.)	168				
Dry Bulb (°F)	207	Wet Bulb (°F)	108		
Moisture Content (%)	4.83				
Monometer	Expanded				
Barometric Pressure	29.09				
Static Pressure +/-	-0.39				
Operators	Aaron Wilson / Nate Beinemann				
Pitot No.	04-5+-P1	Pitot Coeff.	0.8310		

Low Load (80 Klbs/Hr)

Traverse Point Number	Fraction of Diameter	Distance From Stack Wall (in.)	Distance From End of Port (in.)	Velocity	Temperature of Gas (°F)
		Port Length (in.):	14.00	Start Time:	6:39 AM
A-1	0.032	5.38	19.38	0.014	207
A-2	0.105	17.64	31.64	0.015	207
A-3	0.194	32.59	46.59	0.017	207
A-4	0.323	54.26	68.26	0.014	207
B-1				0.019	208
B-2				0.020	208
B-3				0.023	208
B-4				0.019	208
C-1				0.018	208
C-2				0.018	207
C-3				0.019	207
C-4				0.017	207
D-1				0.020	207
D-2				0.016	207
D-3				0.016	207
D-4				0.017	207
Digital Numbers Used:		85 / 138		End Time:	6:46 AM

Interpoll Laboratories
(763) 786-6020

EPA Method 2 Field Data Sheet

Job	MSI / Manitowoc PU				
Source	S20 Boiler Stack				
Test	1L	Run 5	Date	7/23/2013	
Stack Diameter (in.)	168				
Dry Bulb (°F)	208	Wet Bulb (°F)	108		
Moisture Content (%)	4.79				
Monometer	Expanded				
Barometric Pressure	29.09				
Static Pressure +/-	-0.39				
Operators	Aaron Wilson / Nate Beinemann				
Pitot No.	04-5+-P1	Pitot Coeff.	0.8310		

Cross-section View	Elevation View

Low Load (80 Klbs/Hr)

Traverse Point Number	Fraction of Diameter	Distance From Stack Wall (in.)	Distance From End of Port (in.)	Velocity	Temperature of Gas (°F)
		Port Length (in.):	14.00	Start Time:	7:02 AM
A-1	0.032	5.38	19.38	0.016	208
A-2	0.105	17.64	31.64	0.018	208
A-3	0.194	32.59	46.59	0.019	208
A-4	0.323	54.26	68.26	0.019	208
B-1				0.022	208
B-2				0.019	208
B-3				0.018	208
B-4				0.020	208
C-1				0.020	208
C-2				0.023	208
C-3				0.025	208
C-4				0.023	208
D-1				0.017	207
D-2				0.018	207
D-3				0.017	207
D-4				0.016	207
Digital Numbers Used:		85 / 138		End Time:	7:10 AM

Interpoll Laboratories
(763) 786-6020

EPA Method 2 Field Data Sheet

Job	MSI / Manitowoc PU				
Source	S20 Boiler Stack				
Test	1L	Run	6	Date	7/23/2013
Stack Diameter (in.)	168				
Dry Bulb (°F)	207	Wet Bulb (°F)	108		
Moisture Content (%)	4.83				
Monometer	Expanded				
Barometric Pressure	29.09				
Static Pressure +/-	-0.39				
Operators	Aaron Wilson / Nate Beinemann				
Pitot No.	04-5+-P1	Pitot Coeff.	0.8310		

Cross-section View	Elevation View

Low Load (80 Klbs/Hr)

Traverse Point Number	Fraction of Diameter	Distance From Stack Wall (in.)	Distance From End of Port (in.)	Velocity	Temperature of Gas (°F)
		Port Length (in.):	14.00	Start Time:	7:11 AM
A-1	0.032	5.38	19.38	0.016	207
A-2	0.105	17.64	31.64	0.018	207
A-3	0.194	32.59	46.59	0.018	207
A-4	0.323	54.26	68.26	0.019	207
B-1				0.018	208
B-2				0.019	208
B-3				0.017	208
B-4				0.019	208
C-1				0.022	206
C-2				0.023	206
C-3				0.025	206
C-4				0.021	206
D-1				0.018	206
D-2				0.017	206
D-3				0.018	206
D-4				0.016	206
Digital Numbers Used:		85 / 138		End Time:	7:16 AM

Interpoll Laboratories
(763) 786-6020

EPA Method 2 Field Data Sheet

Job	MSI / Manitowoc PU				
Source	S20 Boiler Stack				
Test	1L	Run 7	Date	7/23/2013	
Stack Diameter (in.)	168				
Dry Bulb (°F)	209	Wet Bulb (°F)	108		
Moisture Content (%)	4.75				
Monometer	Expanded				
Barometric Pressure	29.09				
Static Pressure +/-	-0.38				
Operators	Aaron Wilson / Nate Beinemann				
Pitot No.	04-5+-P1	Pitot Coeff.	0.8310		

Cross-section View	Elevation View

Low Load (80 Klbs/Hr)

Traverse Point Number	Fraction of Diameter	Distance From Stack Wall (in.)	Distance From End of Port (in.)	Velocity	Temperature of Gas (°F)
		Port Length (in.):	14.00	Start Time:	7:17 AM
A-1	0.032	5.38	19.38	0.018	209
A-2	0.105	17.64	31.64	0.019	209
A-3	0.194	32.59	46.59	0.017	209
A-4	0.323	54.26	68.26	0.019	209
B-1				0.020	209
B-2				0.018	209
B-3				0.019	209
B-4				0.019	209
C-1				0.023	210
C-2				0.024	210
C-3				0.025	210
C-4				0.022	210
D-1				0.018	210
D-2				0.016	210
D-3				0.016	210
D-4				0.017	210
Digital Numbers Used:		85 / 138		End Time:	7:24 AM

Interpoll Laboratories
(763) 786-6020

EPA Method 2 Field Data Sheet

Job	MSI / Manitowoc PU				
Source	S20 Boiler Stack				
Test	1L	Run	8	Date	7/23/2013
Stack Diameter (in.)	168				
Dry Bulb (°F)	211	Wet Bulb (°F)	108		
Moisture Content (%)	4.68				
Monometer	Expanded				
Barometric Pressure	29.09				
Static Pressure +/-	-0,39				
Operators	Aaron Wilson / Nate Beinemann				
Pitot No.	04-5+-P1	Pitot Coeff.	0.8310		

Cross-section View	Elevation View

Low Load (80 Klbs/Hr)

Traverse Point Number	Fraction of Diameter	Distance From Stack Wall (in.)	Distance From End of Port (in.)	Velocity	Temperature of Gas (°F)
		Port Length (in.):	14.00	Start Time:	7:42 AM
A-1	0.032	5.38	19.38	0.020	211
A-2	0.105	17.64	31.64	0.018	211
A-3	0.194	32.59	46.59	0.019	211
A-4	0.323	54.26	68.26	0.019	211
B-1				0.019	210
B-2				0.017	210
B-3				0.018	210
B-4				0.018	210
C-1				0.020	210
C-2				0.020	210
C-3				0.019	210
C-4				0.020	210
D-1				0.017	209
D-2				0.016	209
D-3				0.016	209
D-4				0.016	209
Digital Numbers Used:		85 / 138		End Time:	7:49 AM

Interpoll Laboratories
(763) 786-6020

EPA Method 2 Field Data Sheet

Job	MSI / Manitowoc PU				
Source	S20 Boiler Stack				
Test	1L	Run 9	Date	7/23/2013	
Stack Diameter (in.)	168				
Dry Bulb (°F)	212	Wet Bulb (°F)	108		
Moisture Content (%)	4.65				
Monometer	Expanded				
Barometric Pressure	29.09				
Static Pressure +/-	-0.39				
Operators	Aaron Wilson / Nate Beinemann				
Pitot No.	04-5+-P1	Pitot Coeff.	0.8310		

Cross-section View	Elevation View

Low Load (80 Klbs/Hr)

Traverse Point Number	Fraction of Diameter	Distance From Stack Wall (in.)	Distance From End of Port (in.)	Velocity	Temperature of Gas (°F)
		Port Length (in.):	14.00	Start Time:	7:50 AM
A-1	0.032	5.38	19.38	0.017	212
A-2	0.105	17.64	31.64	0.019	212
A-3	0.194	32.59	46.59	0.019	212
A-4	0.323	54.26	68.26	0.018	212
B-1				0.019	212
B-2				0.018	212
B-3				0.018	212
B-4				0.019	212
C-1				0.020	211
C-2				0.020	211
C-3				0.019	211
C-4				0.021	211
D-1				0.017	210
D-2				0.017	210
D-3				0.017	210
D-4				0.018	210
Digital Numbers Used:		85 / 138		End Time:	7:57 AM

Interpoll Laboratories
(763) 786-6020

EPA Method 2 Field Data Sheet

Job	MSI / Manitowoc PU				
Source	S20 Boiler Stack				
Test	1L	Run	10	Date	7/23/2013
Stack Diameter (in.)	168				
Dry Bulb (°F)	210	Wet Bulb (°F)	108		
Moisture Content (%)	4.72				
Monometer	Expanded				
Barometric Pressure	29.09				
Static Pressure +/-	-0.39				
Operators	Aaron Wilson / Nate Beinemann				
Pitot No.	04-5+-P1	Pitot Coeff.	0.8310		

Cross-section View	Elevation View

Low Load (80 Klbs/Hr)

Traverse Point Number	Fraction of Diameter	Distance From Stack Wall (in.)	Distance From End of Port (in.)	Velocity	Temperature of Gas (°F)
		Port Length (in.):	14.00	Start Time:	7:58 AM
A-1	0.032	5.38	19.38	0.018	210
A-2	0.105	17.64	31.64	0.019	210
A-3	0.194	32.59	46.59	0.019	210
A-4	0.323	54.26	68.26	0.019	210
B-1				0.017	210
B-2				0.018	210
B-3				0.018	210
B-4				0.020	210
C-1				0.019	211
C-2				0.022	211
C-3				0.023	211
C-4				0.021	211
D-1				0.018	209
D-2				0.017	209
D-3				0.016	209
D-4				0.017	209
Digital Numbers Used:		85 / 138		End Time:	8:06 AM

APPENDIX D

MEASUREMENT SYSTEM PERFORMANCE SPECIFICATIONS

MSI / Manitowoc PU
Manitowoc, WI
S20 Boiler Stack
7/23/2013
Test 1L

SO_2(TEI Model 43i)

	Cylinder Value (ppm)	Analyzer Response (ppm)	Difference (ppm)	Span Value (ppm)	% of Span
Zero	0.00	0.27	0.27	112.00	0.24
Mid Level	49.60	49.10	0.50	112.00	0.45
High Level	112.00	112.30	0.30	112.00	0.27

CO (TEI Model 43i)

	Cylinder Value (ppm)	Analyzer Response (ppm)	Difference (ppm)	Span Value (ppm)	% of Span
Zero	0.00	0.06	0.06	50.80	0.12
Mid Level	50.80	50.67	0.13	50.80	0.26
High Level	114.00	114.80	0.80	114.00	0.70

NOx (TEI Model 42i)

	Cylinder Value (ppm)	Analyzer Response (ppm)	Difference (ppm)	Span Value (ppm)	% of Span
Zero	0.00	0.03	0.03	113.00	0.03
Mid Level	50.40	50.22	0.18	113.00	0.16
High Level	113.00	114.60	1.60	113.00	1.42

CO_2 (TEI Model 410i)

	Cylinder Value (ppm)	Analyzer Response (ppm)	Difference (ppm)	Span Value (%)	% of Span
Zero	0.00	0.03	0.03	16.73	0.18
Mid Level	8.30	8.35	0.05	16.73	0.31
High Level	16.73	16.78	0.05	16.73	0.30

O_2 (Servomex Series 1400)

	Cylinder Value (ppm)	Analyzer Response (ppm)	Difference (ppm)	Span Value (%)	% of Span
Zero	0.00	0.15	0.15	21.40	0.70
Mid Level	10.70	10.81	0.11	21.40	0.51
High Level	21.40	21.14	0.26	21.40	1.21

**** All Calibrations must be within 2% of the span value...

Calibration Drift

MSI / Manitowoc PU
Manitowoc, WI
S20 Boiler Stack
7/23/2013
Test 1L

O_2

		Initial	Pre-Cal Bias	Final	Post-cal Bias	Avg.	% Drift of Span
1	Zero	0.15	0.00%	0.15	0.00%	**0.15**	**0.00%**
	Upscale	10.81	0.00%	10.85	0.19%	**10.83**	**0.19%**
2	Zero	0.15	0.00%	0.12	-0.14%	**0.14**	**-0.14%**
	Upscale	10.85	0.19%	10.85	0.19%	**10.85**	**0.00%**
3	Zero	0.12	-0.14%	0.15	0.00%	**0.14**	**0.14%**
	Upscale	10.85	0.19%	10.80	-0.05%	**10.83**	**-0.23%**
4	Zero	0.15	0.00%	0.16	0.05%	**0.16**	**0.05%**
	Upscale	10.80	-0.05%	10.81	0.00%	**10.81**	**0.05%**
5	Zero	0.16	0.05%	0.15	0.00%	**0.16**	**-0.05%**
	Upscale	10.81	0.00%	10.80	-0.05%	**10.81**	**-0.05%**
6	Zero	0.15	0.00%	0.13	-0.09%	**0.14**	**-0.09%**
	Upscale	10.80	-0.05%	10.78	-0.14%	**10.79**	**-0.09%**
7	Zero	0.13	-0.09%	0.15	0.00%	**0.14**	**0.09%**
	Upscale	10.78	-0.14%	10.84	0.14%	**10.81**	**0.28%**
8	Zero	0.15	0.00%	0.15	0.00%	**0.15**	**0.00%**
	Upscale	10.84	0.14%	10.75	-0.28%	**10.80**	**-0.42%**
9	Zero	0.15	0.00%	0.12	-0.14%	**0.14**	**-0.14%**
	Upscale	10.75	-0.28%	10.75	-0.28%	**10.75**	**0.00%**
10	Zero	0.12	-0.14%	0.18	0.14%	**0.15**	**0.28%**
	Upscale	10.75	-0.28%	10.80	-0.05%	**10.78**	**0.23%**

	Cylinder Value	Analyzer Value
Zero	0.00 %	0.15 %
Upscale	10.70 %	10.81 %
Span	21.40 %	21.40 %

** All Drift Calibrations must be within 3% of the span value...
** All Bias Calibrations must be within 5% of the span value...

Calibration Drift

MSI / Manitowoc PU
Manitowoc, WI
S20 Boiler Stack
7/23/2013
Test 1L

CO_2

		Initial	Pre-Cal Bias	Final	Post-Cal Bias	Avg.	% Drift of Span
1	Zero	0.03	0.00%	0.01	-0.12%	**0.02**	**-0.12%**
	Upscale	8.35	0.00%	8.23	-0.73%	**8.29**	**-0.73%**
2	Zero	0.01	-0.12%	0.08	0.30%	**0.05**	**0.42%**
	Upscale	8.23	-0.73%	8.32	-0.19%	**8.28**	**0.54%**
3	Zero	0.08	0.30%	0.02	-0.06%	**0.05**	**-0.36%**
	Upscale	8.32	-0.19%	8.24	-0.67%	**8.28**	**-0.48%**
4	Zero	0.02	-0.06%	0.05	0.12%	**0.04**	**0.18%**
	Upscale	8.24	-0.67%	8.22	-0.79%	**8.23**	**-0.12%**
5	Zero	0.05	0.12%	0.03	0.00%	**0.04**	**-0.12%**
	Upscale	8.22	-0.79%	8.21	-0.85%	**8.22**	**-0.06%**
6	Zero	0.03	0.00%	0.11	0.48%	**0.07**	**0.48%**
	Upscale	8.21	-0.85%	8.26	-0.55%	**8.24**	**0.30%**
7	Zero	0.11	0.48%	0.02	-0.06%	**0.07**	**-0.54%**
	Upscale	8.26	-0.55%	8.26	-0.55%	**8.26**	**0.00%**
8	Zero	0.02	-0.06%	0.03	0.00%	**0.03**	**0.06%**
	Upscale	8.26	-0.55%	8.23	-0.73%	**8.25**	**-0.18%**
9	Zero	0.03	0.00%	0.02	-0.06%	**0.03**	**-0.06%**
	Upscale	8.23	-0.73%	8.26	-0.55%	**8.25**	**0.18%**
10	Zero	0.02	-0.06%	0.01	-0.12%	**0.02**	**-0.06%**
	Upscale	8.26	-0.55%	8.21	-0.85%	**8.24**	**-0.30%**

	Cylinder Value		Analyzer Response	
Zero	0.00	ppm	0.03	ppm
Upscale	8.30	ppm	8.35	ppm
Span	16.73	ppm	16.73	ppm

** All Drift Calibrations must be within 3% of the span value...
** All Bias Calibrations must be within 5% of the span value...

Calibration Drift

MSI / Manitowoc PU
Manitowoc, WI
S20 Boiler Stack
7/23/2013
Test 1L

Nox

		Initial	Pre-Cal Bias	Final	Post-Cal Bias	Avg.	% Drift of Span
1	Zero	0.03	0.00%	0.12	0.08%	**0.08**	**0.08%**
	Upscale	50.22	0.00%	50.37	0.13%	**50.30**	**0.13%**
2	Zero	0.12	0.08%	0.09	0.05%	**0.11**	**-0.03%**
	Upscale	50.37	0.13%	49.91	-0.27%	**50.14**	**-0.41%**
3	Zero	0.09	0.05%	0.06	0.03%	**0.08**	**-0.03%**
	Upscale	49.91	-0.27%	49.95	-0.24%	**49.93**	**0.04%**
4	Zero	0.06	0.03%	0.07	0.04%	**0.07**	**0.01%**
	Upscale	49.95	-0.24%	50.05	-0.15%	**50.00**	**0.09%**
5	Zero	0.07	0.04%	0.13	0.09%	**0.10**	**0.05%**
	Upscale	50.05	-0.15%	50.04	-0.16%	**50.05**	**-0.01%**
6	Zero	0.13	0.09%	0.13	0.09%	**0.13**	**0.00%**
	Upscale	50.04	-0.16%	49.70	-0.46%	**49.87**	**-0.30%**
7	Zero	0.13	0.09%	0.13	0.09%	**0.13**	**0.00%**
	Upscale	49.70	-0.46%	49.45	-0.68%	**49.58**	**-0.22%**
8	Zero	0.13	0.09%	0.15	0.11%	**0.14**	**0.02%**
	Upscale	49.45	-0.68%	49.76	-0.41%	**49.61**	**0.27%**
9	Zero	0.15	0.11%	0.12	0.08%	**0.14**	**-0.03%**
	Upscale	49.76	-0.41%	49.39	-0.73%	**49.58**	**-0.33%**
10	Zero	0.12	0.08%	0.13	0.09%	**0.13**	**0.01%**
	Upscale	49.39	-0.73%	49.76	-0.41%	**49.58**	**0.33%**

	Cylinder Value	Analyzer Response
Zero	0.00 ppm	0.03 ppm
Upscale	50.40 ppm	50.22 ppm
Span	113.00 ppm	113.00 ppm

** All Drift Calibrations must be within 3% of the span value...
** All Bias Calibrations must be within 5% of the span value...

Calibration Drift

MSI / Manitowoc PU
Manitowoc, WI
S20 Boiler Stack
7/23/2013
Test 1L

SO_2

		Initial	Pre-Cal Bias	Final	Post-Cal Bias	Avg.	% Drift of Span
1	Zero	0.27	0.00%	0.06	-0.19%	**0.17**	**-0.19%**
	Upscale	49.10	0.00%	48.52	-0.52%	**48.81**	**-0.52%**
2	Zero	0.06	-0.19%	0.08	-0.17%	**0.07**	**0.02%**
	Upscale	48.52	-0.52%	49.67	0.51%	**49.10**	**1.03%**
3	Zero	0.08	-0.17%	0.11	-0.14%	**0.10**	**0.03%**
	Upscale	49.67	0.51%	49.94	0.75%	**49.81**	**0.24%**
4	Zero	0.11	-0.14%	0.14	-0.12%	**0.13**	**0.03%**
	Upscale	49.94	0.75%	49.73	0.56%	**49.84**	**-0.19%**
5	Zero	0.14	-0.12%	0.05	-0.20%	**0.10**	**-0.08%**
	Upscale	49.73	0.56%	49.65	0.49%	**49.69**	**-0.07%**
6	Zero	0.05	-0.20%	0.09	-0.16%	**0.07**	**0.04%**
	Upscale	49.65	0.49%	48.82	-0.25%	**49.24**	**-0.74%**
7	Zero	0.09	-0.16%	0.06	-0.19%	**0.08**	**-0.03%**
	Upscale	48.82	-0.25%	48.83	-0.24%	**48.83**	**0.01%**
8	Zero	0.06	-0.19%	0.18	-0.08%	**0.12**	**0.11%**
	Upscale	48.83	-0.24%	49.38	0.25%	**49.11**	**0.49%**
9	Zero	0.18	-0.08%	0.17	-0.09%	**0.18**	**-0.01%**
	Upscale	49.38	0.25%	49.12	0.02%	**49.25**	**-0.23%**
10	Zero	0.17	-0.09%	0.17	-0.09%	**0.17**	**0.00%**
	Upscale	49.12	0.02%	48.82	-0.25%	**48.97**	**-0.27%**

	Cylinder Value	Analyzer Response
Zero	0.00 ppm	0.27 ppm
Upscale	49.60 ppm	49.10 ppm
Span	112.00 ppm	112.00 ppm

** All Drift Calibrations must be within 3% of the span value...
** All Bias Calibrations must be within 5% of the span value...

Calibration Drift

MSI / Manitowoc PU
Manitowoc, WI
S20 Boiler Stack
7/23/2013
Test 1L

CO

		Initial	Pre-Cal Bias	Final	Post-Cal Bias	Avg.	% Drift of Span
1	Zero	0.06	0.00%	0.17	0.10%	**0.12**	**0.10%**
	Upscale	50.67	0.00%	49.98	-0.60%	**50.33**	**-0.60%**
2	Zero	0.17	0.10%	0.13	0.06%	**0.15**	**-0.03%**
	Upscale	49.98	-0.60%	49.39	-1.11%	**49.69**	**-0.51%**
3	Zero	0.13	0.06%	0.15	0.08%	**0.14**	**0.02%**
	Upscale	49.39	-1.11%	49.43	-1.08%	**49.41**	**0.03%**
4	Zero	0.15	0.08%	0.14	0.07%	**0.15**	**-0.01%**
	Upscale	49.43	-1.08%	49.72	-0.83%	**49.58**	**0.25%**
5	Zero	0.14	0.07%	0.18	0.10%	**0.16**	**0.03%**
	Upscale	49.72	-0.83%	49.86	-0.71%	**49.79**	**0.12%**
6	Zero	0.18	0.10%	0.13	0.06%	**0.16**	**-0.04%**
	Upscale	49.86	-0.71%	49.86	-0.71%	**49.86**	**0.00%**
7	Zero	0.13	0.06%	0.14	0.07%	**0.14**	**0.01%**
	Upscale	49.86	-0.71%	49.41	-1.10%	**49.64**	**-0.39%**
8	Zero	0.14	0.07%	0.17	0.10%	**0.16**	**0.03%**
	Upscale	49.41	-1.10%	50.12	-0.48%	**49.77**	**0.62%**
9	Zero	0.17	0.10%	0.13	0.06%	**0.15**	**-0.03%**
	Upscale	50.12	-0.48%	49.96	-0.62%	**50.04**	**-0.14%**
10	Zero	0.13	0.06%	0.12	0.05%	**0.13**	**-0.01%**
	Upscale	49.96	-0.62%	49.98	-0.60%	**49.97**	**0.02%**

	Cylinder Value	Analyzer Response
Zero	0.00 ppm	0.06 ppm
Upscale	50.80 ppm	50.67 ppm
Span	114.00 ppm	114.80 ppm

** All Drift Calibrations must be within 3% of the span value...
** All Bias Calibrations must be within 5% of the span value...

Interpoll Laboratories
(763) 786-6020

Stationary Gas Turbine Nox Determination
Method 20 NO_2 to NO Converter Efficiency Datasheet

Job	MSI / Manitowoc PU
Source	S20 Boiler Stack
Date	7/23/2013
Operator	Aaron Wilson / Nate Beinemann
Analyzer	TECO Model 42i (NOx)
Analyzer S/N	510511561

Time (min)	NOx Response
2:13 PM	61.915
2:14 PM	61.457
2:15 PM	61.297
2:16 PM	61.893
2:17 PM	61.866
2:18 PM	61.740
2:19 PM	61.469
2:20 PM	61.617
2:21 PM	61.274
2:22 PM	61.031
2:23 PM	61.989
2:24 PM	61.935
2:25 PM	61.747
2:26 PM	61.307
2:27 PM	61.270
2:28 PM	61.792
2:29 PM	61.770
2:30 PM	61.225
2:31 PM	61.284
2:32 PM	61.192
2:33 PM	61.661
2:34 PM	61.583
2:35 PM	61.286
2:36 PM	61.006
2:37 PM	61.118
2:38 PM	61.929
2:39 PM	61.660
2:40 PM	61.654
2:41 PM	61.808
2:42 PM	61.329
Highest Peak Value	61.99
Percent Drift	1.1%
System Pass of Fail	**PASS**

Instructions: Add mid-level gas to a leak-free Tedlar bag. Dilute the gas with 20.9% Oxygen to approximately 1:1. Then immediately attach the bag to the instrument and record the Nox Reponses for 30 minutes. The system is OK if the response at the end is less than 2.0 % of the highest response.

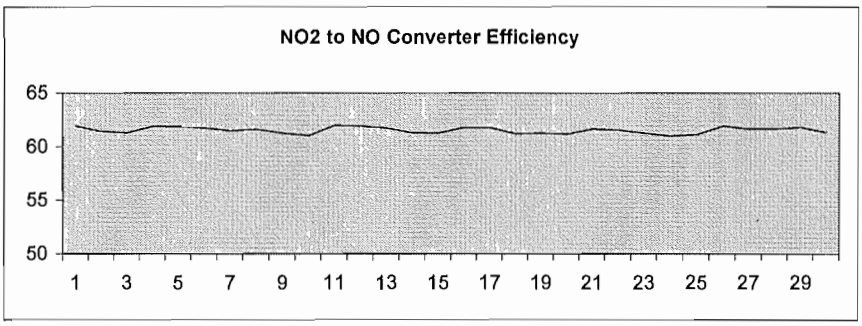

INTERPOLL LABORATORIES, INC.
(763) 786-6020

EPA Appendix A Stratification Test

Job:	MSI / Manitowoc PU	**Date:**	7/23/2013
Source:	S20 Boiler Stack	**Personnel:**	Aaron Wilson / Nate Beinemann
Test	1L	**Bar. Press. (in. Hg)**	29.04
PDT Number	85 / 138		
Measurement Response Time:		113	seconds

Stack Diameter 168.00 **in.** **Port Length in.** 14.00

Traverse Point	Fraction of Diameter	Distance From Stack Wall (in.)	Distance From End of Port (in.)	Time (min)	SO2 ppm (wet)	Nox ppm (wet)	O2 % (dry)	CO_2 % (wet)
1	0.17	28.00	**42.00**	14:50	43.22	21.98	14.87	4.91
2	0.50	84.00	**98.00**	14:57	43.56	21.47	14.85	4.94
3	0.83	140.00	**154.00**	15:04	42.31	21.76	14.89	4.76
Average					**43.03**	**21.73**	**14.87**	**4.87**
			Largest Value		43.56	21.98	14.89	4.94
			Smallest Value		42.31	21.47	14.85	4.76
			%Deviation		**2.96%**	**2.38%**	**0.31%**	**3.76%**

* A three point traverse was used for each test run.

MSI / Manitowoc PU
Manitowoc, WI
S20 Boiler Stack
7/23/2013
Stratification Test Data

Time	SO_2 ppm, w	Nox ppm, w	$\%O_2$, d	% CO_2, w
14:50:00	44.94	22.02	14.88	5.01
14:51:00	43.99	22.37	14.73	4.92
14:52:00	42.76	21.79	14.80	5.00
14:53:00	42.51	21.89	14.80	4.87
14:54:00	43.42	21.93	14.90	4.88
14:55:00	42.63	21.86	14.98	4.78
14:56:00	42.27	21.99	14.98	4.90
Average	**43.22**	**21.98**	**14.87**	**4.91**

Time	SO_2 ppm, w	Nox ppm, w	$\%O_2$, d	% CO_2, w
14:57:00	43.72	22.24	14.84	4.96
14:58:00	43.29	21.89	14.87	4.91
14:59:00	43.39	21.22	14.84	4.91
15:00:00	44.74	22.05	14.87	5.08
15:01:00	43.44	20.97	14.76	4.93
15:02:00	43.12	21.06	14.85	4.90
15:03:00	43.24	20.85	14.91	4.87
Average	**43.56**	**21.47**	**14.85**	**4.94**

Time	SO_2 ppm, w	Nox ppm, w	$\%O_2$, d	% CO_2, w
15:04:00	43.50	21.40	14.92	4.89
15:05:00	44.63	21.08	14.92	4.95
15:06:00	43.66	21.35	14.92	4.89
15:07:00	40.82	20.74	15.01	4.71
15:08:00	41.18	21.41	15.01	4.91
15:09:00	42.76	21.75	14.91	4.85
15:10:00	39.62	24.56	14.57	4.11
Average	**42.31**	**21.76**	**14.89**	**4.76**

MPU03370

MSI / Manitowoc PU
Manitowoc, WI
S20 Boiler Stack
7/23/2013
Test 1H

CO_2 (TEI Model 410i)

	Cylinder Value (ppm)	Analyzer Response (ppm)	Difference (ppm)	Span Value (ppm)	% of Span
Zero	0.00	0.03	0.03	16.73	0.18
Mid Level	8.30	8.35	0.05	16.73	0.31
High Level	16.73	16.78	0.05	16.73	0.30

O_2 (Servomex Series 1400)

	Cylinder Value (ppm)	Analyzer Response (ppm)	Difference (ppm)	Span Value (ppm)	% of Span
Zero	0.00	0.15	0.15	21.40	0.70
Mid Level	10.70	10.81	0.11	21.40	0.51
High Level	21.40	21.14	0.26	21.40	1.21

**** All Calibrations must be within 2% of the span value...

Calibration Drift

MSI / Manitowoc PU
Manitowoc, WI
S20 Boiler Stack
7/23/2013
Test 1H

O_2

		Initial	Pre-Cal Bias	Final	Post-cal Bias	Avg.	% Drift of Span
1	Zero	0.15	0.00%	0.10	-0.23%	**0.13**	**-0.23%**
	Upscale	10.81	0.00%	10.77	-0.19%	**10.79**	**-0.19%**
2	Zero	0.10	-0.23%	0.10	-0.23%	**0.10**	**0.00%**
	Upscale	10.77	-0.19%	10.77	-0.19%	**10.77**	**0.00%**
3	Zero	0.10	-0.23%	0.10	-0.23%	**0.10**	**0.00%**
	Upscale	10.77	-0.19%	10.77	-0.19%	**10.77**	**0.00%**
4	Zero	0.10	-0.23%	0.11	-0.19%	**0.11**	**0.05%**
	Upscale	10.77	-0.19%	10.78	-0.14%	**10.78**	**0.05%**
5	Zero	0.11	-0.19%	0.11	-0.19%	**0.11**	**0.00%**
	Upscale	10.78	-0.14%	10.78	-0.14%	**10.78**	**0.00%**
6	Zero	0.11	-0.19%	0.11	-0.19%	**0.11**	**0.00%**
	Upscale	10.78	-0.14%	10.78	-0.14%	**10.78**	**0.00%**
7	Zero	0.11	-0.19%	0.11	-0.19%	**0.11**	**0.00%**
	Upscale	10.78	-0.14%	10.78	-0.14%	**10.78**	**0.00%**
8	Zero	0.11	-0.19%	0.11	-0.19%	**0.11**	**0.00%**
	Upscale	10.78	-0.14%	10.78	-0.14%	**10.78**	**0.00%**
9	Zero	0.11	-0.19%	0.11	-0.19%	**0.11**	**0.00%**
	Upscale	10.78	-0.14%	10.78	-0.14%	**10.78**	**0.00%**
10	Zero	0.11	-0.19%	0.11	-0.19%	**0.11**	**0.00%**
	Upscale	10.78	-0.14%	10.78	-0.14%	**10.78**	**0.00%**

	Cylinder Value	Analyzer Value
Zero	0.00 %	0.15 %
Upscale	10.70 %	10.81 %
Span	21.40 %	21.4 %

** All Drift Calibrations must be within 3% of the span value...
** All Bias Calibrations must be within 5% of the span value...

Calibration Drift

MSI / Manitowoc PU
Manitowoc, WI
S20 Boiler Stack
7/23/2013
Test 1H

CO_2

		Initial	Pre-Cal Bias	Final	Post-Cal Bias	Avg.	% Drift of Span
1	Zero	0.03	0.00%	0.06	0.18%	**0.05**	**0.18%**
	Upscale	8.35	0.00%	8.40	0.29%	**8.38**	**0.29%**
2	Zero	0.06	0.18%	0.06	0.18%	**0.06**	**0.00%**
	Upscale	8.40	0.29%	8.40	0.29%	**8.40**	**0.00%**
3	Zero	0.06	0.18%	0.06	0.18%	**0.06**	**0.00%**
	Upscale	8.40	0.29%	8.40	0.29%	**8.40**	**0.00%**
4	Zero	0.06	0.18%	0.05	0.12%	**0.06**	**-0.06%**
	Upscale	8.40	0.29%	8.35	-0.01%	**8.38**	**-0.30%**
5	Zero	0.05	0.12%	0.05	0.12%	**0.05**	**0.00%**
	Upscale	8.35	-0.01%	8.35	-0.01%	**8.35**	**0.00%**
6	Zero	0.05	0.12%	0.05	0.12%	**0.05**	**0.00%**
	Upscale	8.35	-0.01%	8.35	-0.01%	**8.35**	**0.00%**
7	Zero	0.05	0.12%	0.05	0.12%	**0.05**	**0.00%**
	Upscale	8.35	-0.01%	8.35	-0.01%	**8.35**	**0.00%**
8	Zero	0.05	0.12%	0.05	0.12%	**0.05**	**0.00%**
	Upscale	8.35	-0.01%	8.35	-0.01%	**8.35**	**0.00%**
9	Zero	0.05	0.12%	0.05	0.12%	**0.05**	**0.00%**
	Upscale	8.35	-0.01%	8.35	-0.01%	**8.35**	**0.00%**
10	Zero	0.05	0.12%	0.05	0.12%	**0.05**	**0.00%**
	Upscale	8.35	-0.01%	8.35	-0.01%	**8.35**	**0.00%**

	Cylinder Value	Analyzer Response
Zero	0.00 ppm	0.03 ppm
Upscale	8.30 ppm	8.35 ppm
Span	16.73 ppm	16.73 ppm

** All Drift Calibrations must be within 3% of the span value...
** All Bias Calibrations must be within 5% of the span value...

APPENDIX E

CALIBRATION GAS CERTIFICATION SHEETS

THE LINDE GROUP

Linde

CERTIFICATE OF ANALYSIS

EPA PROTOCOL MIXTURE

PROCEDURE # : G1

PGVP ID#:	I12012	**GAS CODE:**	OC2
CUSTOMER:	HAMMOND	**CYLINDER # :**	CC-131002
SALES#:	501172279	**CYLINDER PRES:**	2000 PSIG
PROD#:	1240925	**CYLINDER VALVE:**	CGA 590
P.O.# :	4501172279	**CYLINDER SIZE:**	2A
MATERIAL#:	24090596	**CYLINDER MATERIAL:**	Aluminum
CERTIFICATION DATE:	18-Dec-2012	**GAS VOLUME:**	4000 Liter
EXPIRATION DATE:	19-Dec-2020	**BLEND TOLERANCE:**	5% Relative
(Using the May 2012 Revision of the EPA Protocol)		**PAGE:**	1 of 1

CERTIFICATION HISTORY

COMPONENT	DATE OF ASSAY	MEAN CONCENTRATION	CERTIFIED CONCENTRATION	ANALYTICAL ACCURACY
Carbon Dioxide	18-Dec-2012	16.73 %	16.73 %	+/- 1%
Oxygen	18-Dec-2012	21.4 %	21.4 %	+/- 1%

BALANCE Nitrogen

PREVIOUS CERTIFICATION DATES: None

REFERENCE STANDARDS

COMPONENT	SRM/NTRM#	CYLINDER#	CONCENTRATION
Carbon Dioxide	NTRM-82745x	SG-9609736	19.98 %
Oxygen	NTRM-82659Y	cc-237244	24.52 %

INSTRUMENTATION

COMPONENT	MAKE/MODEL	SERIAL #	DETECTOR	CALIBRATION DATE(S)
Carbon Dioxide	CAI-300	S03001	NDIR	14-Dec-2012
Oxygen	CAI-300	S03001	PM	21-Nov-2012

THIS STANDARD IS NIST TRACEABLE. IT WAS CERTIFIED ACCORDING TO THE 1997 EPA PROTOCOL PROCEDURES. DO NOT USE THIS STANDARD IF THE CYLINDER PRESSURE IS LESS THAN 100 PSIG.

ANALYST: MATTHEW JACKSON Linde Gas North America LLC **DATE:** 18-Dec-2012

(908) 329-9700 Main (908) 329-9740 Fax
www.Lindeus.com

MPU03375

LIQUID TECHNOLOGY CORPORATION

"INDUSTRY LEADER IN SPECIALTY GASES"

Certificate of Analysis

- EPA PROTOCOL GAS -

Customer	Minneapolis Oxygen (Minneapolis, MN)
Date	June 18, 2013
Delivery Receipt	DR-47332
Gas Standard	8.50% CO2, 11.0% Oxygen/Nitrogen - EPA PROTOCOL
Part Number:	SPC NAE 03075
Final Analysis Date	June 17, 2013
Expiration Date	June 17, 2021

DO NOT USE BELOW 100 psig

Cylinder Data

Cylinder Serial Number:	EB-0019925	Cylinder Outlet:	CGA 590
Cylinder Volume:	136 Cubic Feet	Cylinder Pressure:	1950 psig, 70°F
Expiration Date:	June 17, 2021		

Analytical Data

EPA Protocol, Section No. 2.2, Procedure G-1

Replicate Concentrations

Carbon Dioxide: 8.30% +/- 0.07%

Oxygen: 10.7% +/- 0.08%

Nitrogen: Balance

Reference Standard(s):

GMIS/SRM:	GMIS/GMIS	GMIS
Cylinder Number:	EB-0026839/CC-185129	CC-231332
Concentration:	6.847% CO2/13.92% CO2	9.97% Oxygen
Expiration Date:	10/13/20 - 06/24/14	04/06/14

Certification Instrumentation

Component:	Carbon Dioxide	Oxygen
Make/Model:	Nicolet 6700	Servomex 244a
Serial Number:	APW1200289	1847
Principal of Measurement:	FTIR	Paramagnetic
Last Calibration:	May 23, 2013	May 31, 2013

Analytical uncertainty and NIST Traceability are in compliance with EPA-600/R-12/531.

Certified by:

David Scott

PGVP Vendor ID: E12013

"UNMATCHED EXCELLENCE"
2048 APEX COURT APOPKA, FLORIDA 32703 ~ PHONE (407)-292-2990 FAX (407)-292-3313
WWW.LIQUIDTECHCORP.COM
APOPKA, FL • HOUSTON, TX

MPU03376

LIQUID TECHNOLOGY CORPORATION

"INDUSTRY LEADER IN SPECIALTY GASES"

Certificate of Analysis

- EPA PROTOCOL GAS -

Customer	Minneapolis Oxygen (Minneapolis, MN)
Date	May 13, 2013
Delivery Receipt	DR-46947
Gas Standard	112.5 ppm CO, 112.5 ppm NO, 112.5 ppm SO2/Nitrogen - EPA PROTOCOL
Final Analysis Date	May 13, 2013
Expiration Date	May 13, 2021
Part Number	SPC NAE04050

DO NOT USE BELOW 100 psig

Analytical Data:
EPA Protocol, Section No. 2.2, Procedure G-1.

Reported Concentrations
Carbon Monoxide: 114 ppm +/- 0.64 ppm
Nitric Oxide: 113 ppm +/- 0.40 ppm
Sulfur Dioxide: 112 ppm +/- 0.86 ppm
Nitrogen: Balance
Total NOx: 113 ppm
**** NOx for Reference Use Only ****

Reference Standards

SRM/GMIS:	GMIS	GMIS/GMIS	GMIS/GMIS
Cylinder Number:	EB-0015851	ND-45693/ND-45515	EB-0014653/CC-251490
Concentration:	104.90 ppm CO	97.434 ppm/245.26 ppm NO	103.89 ppm SO2/507.877 ppm SO2
Expiration Date:	10/21/13	08/23/15 - 10/22/14	12/01/14 - 04/12/15

Certification Instrumentation

Component:	Carbon Monoxide	Nitric Oxide	Sulfur Dioxide
Make/Model:	NEXUS 6700	NEXUS 6700	NEXUS 6700
Serial Number:	APW1200289	APW1200289	APW1200289
Principal of Measurement:	FTIR	FTIR	FTIR
Last Calibration:	April 24, 2013	April 24, 2013	April 24, 2013

Cylinder Data

Cylinder Number:	EB-0040597	Cylinder Volume:	136 Cubic Feet
Cylinder Outlet:	CGA 660	Cylinder Pressure:	1950 psig, 70°F
Expiration Date:	May 13, 2021		

Analytical Uncertainty and NIST Traceability are in compliance with EPA-600/R-12/531.

Certified by: David Scott

PGVP Vendor ID: E12013

"UNMATCHED EXCELLENCE"
2048 APEX COURT APOPKA, FLORIDA 32703 ~ PHONE (407)-292-2990 FAX (407)-292-3313
WWW.LIQUIDTECHCORP.COM
APOPKA, FL • HOUSTON, TX

MPU03377

LIQUID TECHNOLOGY CORPORATION

"INDUSTRY LEADER IN SPECIALTY GASES"

Certificate of Analysis

- EPA PROTOCOL GAS -

Customer	Minneapolis Oxygen (Minneapolis, MN)
Date	February 19, 2013
Delivery Receipt	DR-45794
Gas Standard	50.0 ppm CO, 50.0 ppm NO, 50.0 ppm SO2/Nitrogen - EPA PROTOCOL
Final Analysis Date	February 11, 2013
Expiration Date	February 11, 2021

DO NOT USE BELOW 150 psig

Analytical Data:
EPA Protocol, Section No. 2.2, Procedure G-1.

Reported Concentrations

Carbon Monoxide: 50.8 ppm +/- 0.29 ppm
Nitric Oxide: 50.4 ppm +/- 0.27 ppm
Sulfur Dioxide: 49.6 ppm +/- 0.49 ppm
Nitrogen: Balance
Total NOx: 50.5 ppm
**** NOx for Reference Use Only ****

Reference Standards

SRM/GMIS:	GMIS	GMIS	GMIS
Cylinder Number:	CC-128982	CC-88803	EB-0014698
Concentration:	50.89 ppm CO	49.52 ppm NO	50.67 ppm SO2
Expiration Date:	10/20/14	07/18/13	09/20/14

Certification Instrumentation

Component:	Carbon Monoxide	Nitric Oxide	Sulfur Dioxide
Make/Model:	NEXUS 6700	NEXUS 6700	NEXUS 6700
Serial Number:	AEP99000154	AEP99000154	AEP99000154
Principal of Measurement:	FTIR	FTIR	FTIR
Last Calibration:	January 30, 2013	January 30, 2013	January 30, 2013

Cylinder Data

Cylinder Number:	CC-115901	Cylinder Volume:	133 Cubic Feet
Cylinder Outlet:	CGA 660	Cylinder Pressure:	1900 psig, 70°F
Expiration Date:	February 11, 2021		

Analytical Uncertainty and NIST Traceability are in compliance with EPA-600/R-12/531.

Certified by: David Scott

PGVP Vendor ID: E12013

"UNMATCHED EXCELLENCE"

2048 APEX COURT APOPKA, FLORIDA 32703 ~ PHONE (407)-292-2990 FAX (407)-292-3313
WWW.LIQUIDTECHCORP.COM

LIQUID TECHNOLOGY CORPORATION

"INDUSTRY LEADER IN SPECIALTY GASES"

Certificate of Analysis

- EPA PROTOCOL GAS -

Customer	Minneapolis Oxygen (Minneapolis, MN)
Date	April 29, 2013
Delivery Receipt	DR-46677
Gas Standard	250 ppm CO, 250 ppm NO, 250 ppm SO2/Nitrogen - EPA PROTOCOL
Final Analysis Date	April 01, 2013
Expiration Date	April 01, 2021

DO NOT USE BELOW 100 psig

Analytical Data:
EPA Protocol, Section No. 2.2, Procedure G-1.

Reported Concentrations
Carbon Monoxide: 254 ppm +/- 1.0 ppm
Nitric Oxide: 249 ppm +/- 0.41 ppm
Sulfur Dioxide: 255 ppm +/- 1.0 ppm
Nitrogen: Balance
Total NOx: 249 ppm
**** NOx for Reference Use Only ****

Reference Standards

SRM/GMIS:	GMIS	GMIS/GMIS	GMIS/GMIS
Cylinder Number:	CC-185111	ND-45693/ND-45515	EB-0014653/CC-251490
Concentration:	257.469 ppm CO	97.434 ppm/245.26 ppm NO	103.89 ppm SO2/507.877 ppm SO2
Expiration Date:	10/22/14	08/23/15 - 10/22/14	12/01/14 - 04/12/15

Certification Instrumentation

Component:	Carbon Monoxide	Nitric Oxide	Sulfur Dioxide
Make/Model:	NEXUS 6700	NEXUS 6700	NEXUS 6700
Serial Number:	APW1200289	APW1200289	APW1200289
Principal of Measurement:	FTIR	FTIR	FTIR
Last Calibration:	March 28, 2013	March 28, 2013	March 28, 2013

Cylinder Data

Cylinder Number:	EB-0033979	Cylinder Volume:	135 Cubic Feet
Cylinder Outlet:	CGA 660	Cylinder Pressure:	1925 psig, 70°F
Expiration Date:	April 01, 2021		

Analytical Uncertainty and NIST Traceability are in compliance with EPA-600/R-12/531.

Certified by: David Scott

PGVP Vendor ID: E1

"UNMATCHED EXCELLENCE"
2048 APEX COURT APOPKA, FLORIDA 32703 ~ PHONE (407)-292-2990 FAX (407)-292-3313
WWW.LIQUIDTECHCORP.COM
APOPKA, FL • HOUSTON, TX

MPU03379

APPENDIX F

GAS ANALYZER SPECIFICATIONS

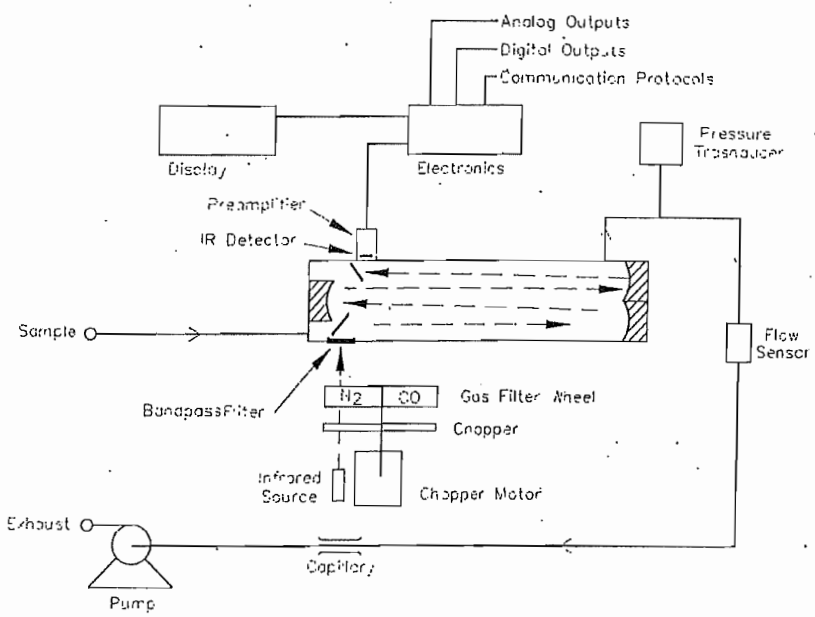

Figure 1-1. Model 48*i* Flow Schematic

Specifications

Table 1-1. Model 48*i* Specifications

Preset ranges	0-1, 2, 5, 10, 20, 50, 100, 200, 500, 1000, 2000, 5000, 10000 (ppm or mg/m^3)
Custom ranges	0-1 to 10000 (ppm or mg/m^3)
Zero noise	0.02 ppm RMS (30 second averaging time)
Lower detectable limit	0.04 ppm
Zero drift (24 hour)	< 0.1 ppm
Span drift	± 1% full-scale
Response time	60 seconds (30 second averaging time)
Linearity	± 1% of full-scale ≤ 1000 ppm ± 2.5% of full-scale > 1000 ppm
Sample flow rate	1.0 LPM
Operating temperature	20–30 °C (may be safely operated over the range of 0–45 °C)*

MPU03381

Power requirements	100 VAC @ 50/60 Hz 115 VAC @ 50/60 Hz* 220–240 VAC @ 50/60 Hz 275 watts
Physical dimensions	16.75" (W) X 8.62" (H) X 23" (D)
Weight	Approximately 49 lbs.
Analog outputs	6 voltage outputs; 0–100 mV, 1, 5, 10 V (User selectable), 5% of full-scale over/under range, 12 bit resolution, user selectable for measurement input
Digital outputs	1 power fail relay Form C, 10 digital relays Form A, user selectable alarm output, relay logic, 100 mA @ 200 VDC
Digital inputs	16 digital inputs, user select programmable, TTL level, pulled high
Serial Ports	1 RS-232 or RS-485 with two connectors, baud rate 1200–115200, data bits, parity, and stop bits, protocols: C-Link, MODBUS, and streaming data (all user selectable)
Ethernet connection	RJ45 connector for 10Mbs Ethernet connection, static or dynamic TCP/IP addressing

*In non condensing environments. Performance specifications based on operation with 20–30 °C range.

MPU03382

MODEL 1420 SERVOMEX PARAMAGNETIC O_2 ANALYZER SPECIFICATIONS

Repeatability:	Better than ± 0.2% O2 under constant conditions
Drift	Less than 0.2% O2 per week under constant conditions. (Excluding variation due to barometric pressure changes; reading is proportional to barometric pressure
Outputs	
Display	3 ½ digit LCD reading 0.0 to 100.0% oxygen with over range capability
Output	0 to 1V (non-isolated) for 0 to 100% oxygen available on 'D' type connector located on the back panel of the instrument. Output impedance is less than 10 ohms.
Option	4 – 20mA isolated, Max impedance 500 ohms
Flow alarm output	Change over relay contact rated at 3A/115V ac, 1A/240V ac or 1A/28V dc. 4 sets of single pole changeover contacts. Alarm becomes active when sample gas flow through the analyzer fails
Sample Requirements	
Condition	Clean, dry gas with dew point 5 deg C below ambient temperature
Inlet pressure	0.5 to 3 psig (3.5 to 21kPa). Inlet pressure changes within this range will change the reading by less than 0.1% O2. May be operated up to 10 psig (70kPa) with degraded stability
Flow rate	1.5 to 6 litres/minute approximately depending on sample pressure
Filtering	0.6 micron replaceable filter integral to the automatic flow control device.
Response time	Less than 15 secs. To 90% at an inlet pressure of 3 psig (21kPa)
Inlet/vent connections	¼ inch OD tube (stainless steel) suitable for 6mm ID flexible tubing or ¼ inch OD compression fittings.

Materials exposed to the sample	Stainless steel, Pyrex glass, brass, platinum, epoxy resin, viton, polypropylene and glass fibre filter
Physical Characteristics	
Case	Steel and aluminum finished in epoxy powder paint
Case Classification	IP 20 (IEC 529) when fitted into the Servomex 1400 series 19 inch case
Weight	10Kg (22 lb) approximately
Electrical	
AC Supply	110 to 120V AC or 220 to 240V AC, ±10%, 48 to 62Hz. Voltage selected by a voltage selector integral to the IEC supply plug
Power required	15VA maximum

NO_2, and NO_x concentrations to the front panel display, the analog outputs, and also makes the data available over the serial or ethernet connection.

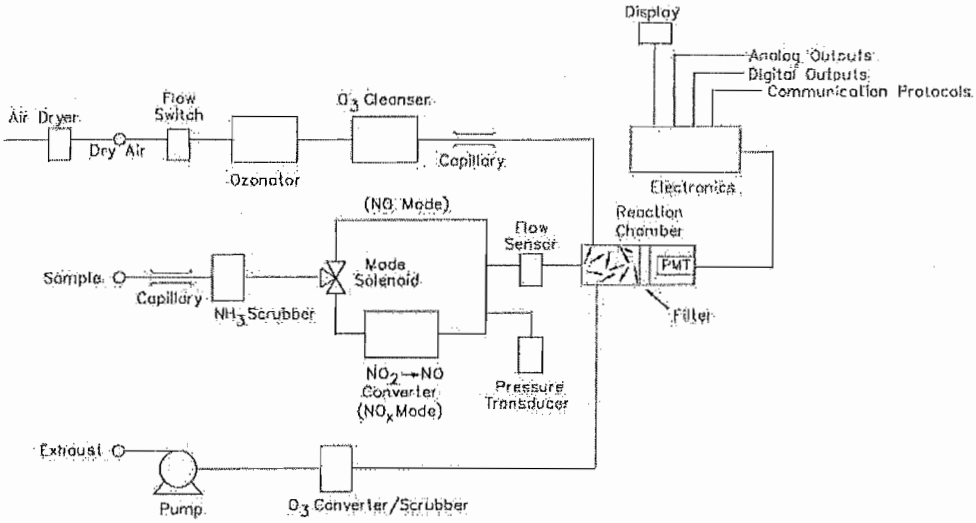

Figure 1-1. Model 42*i* Low Source Flow Schematic

Specifications

Table 1-1. Model 42*i* Low Source Specifications

Preset ranges	0-0.2, 0.5, 1, 2, 5, 10, 20, 50, 100 ppm 0-0.5, 1, 2, 5, 10, 20, 50, 100, 150 mg/m^3
Extended ranges	0-1, 2, 5, 10, 20, 50, 100, 200, 500 ppm 0-2, 5, 10, 20, 50, 100, 200, 500, 750 mg/m^3
Custom ranges	0-0.2 to 100 ppm (0-1 to 500 ppm in extended ranges) 0-0.5 to 150 mg/m^3 (0-2 to 750 mg/m^3 in extended ranges)
Zero noise	0.005 ppm RMS (60 second averaging time)
Lower detectable limit	0.01 ppm (60 second averaging time)
Zero drift (24 hour)	≈ 0.005 ppm
Span drift (24 hour)	± 1% full-scale
Response time (NO/NO_x mode)	15 sec (10 second averaging time) 85 sec (60 second averaging time) 305 sec (300 second averaging time)

MPU03385

Response time (NO mode)	15 sec (10 second averaging time) 65 sec (60 second averaging time) 305 sec (300 second averaging time)
Linearity	± 1% full-scale
Sample flow rate	≈ 25 cc/min. measured at atmospheric pressure
Operating temperature	15–35 °C (may be safely operated over the range of 0–45 °C)*
Power requirements	100 VAC @ 50/60 Hz 115 VAC @ 50/60 Hz 220–240 VAC @ 50/60 Hz 300 watts
Physical dimensions	16.75" (W) X 8.62" (H) X 23" (D)
Weight	Approximately 55 lbs.
Analog outputs	6 voltage outputs; 0–100 mV, 1 V, 5 V, 10 V (User selectable), 5% of full-scale over/under range, 12 bit resolution, user selectable for measurement input
Digital outputs	1 power fail relay Form C, 10 digital relays Form A, user selectable alarm output, relay logic, 100 mA @ 200 VDC
Digital inputs	16 digital inputs, user select programmable, TTL level, pulled high
Serial Ports	1 RS-232 or RS-485 with two connectors, baud rate 1200–115200, data bits, parity, and stop bits, protocols: C-Link, MODBUS, and streaming data (all user selectable)
Ethernet connection	RJ45 connector for 10Mbs Ethernet connection, static or dynamic TCP/IP addressing

*In non condensing environments. Performance specifications based on operation in 15–35 °C range.

MPU03386

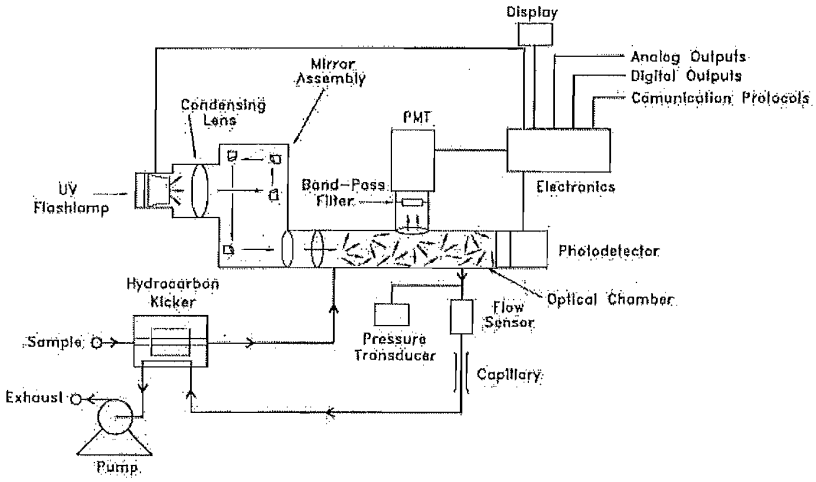

Figure 1-1. Model 43*i* Flow Schematic

Specifications

Table 1-1. Model 43*i* Specifications

Preset ranges	0-0.05, 0.1, 0.2, 0.5, 1, 2, 5, 10 ppm 0-0.2, 0.5, 1, 2, 5, 10, 20, 25 mg/m^3
Extended ranges	0-0.5, 1, 2, 5, 10, 20, 50, 100 ppm 0-2, 5, 10, 20, 50, 100, 200, 250 mg/m^3
Custom ranges	0-0.05 to 10 ppm (0-0.5 to 100 ppm in extended range) 0-0.2 to 25 mg/m^3 (0-2 to 250 mg/m^3 in extended range)
Zero noise	1.0 ppb RMS (10 second averaging time) 0.5 ppb RMS (60 second averaging time) 0.25 ppb RMS (300 second averaging time)
Lower detectable limit	2.0 ppb (10 second averaging time) 1.0 ppb (60 second averaging time) 0.5 ppb (300 second averaging time)
Zero drift (24 hour)	< 1 ppb
Span drift	± 1% full-scale
Response time (in automatic mode)	80 sec (10 second averaging time) 110 sec (60 second averaging time) 320 sec (300 second averaging time)
Linearity	± 1% of full-scale

MPU03387

Sample flow rate	0.5 LPM (standard) 1 LPM (optional)
Interferences (tested at levels specified by EPA)	less than lower detectable limit except for the following: NO: < 3 ppb, tested at 500 ppb M-Xylene: tested at 200 ppb H_2O: tested at 2% of reading
Operating temperature	20–30 °C (may be safely operated over the range of 0–45 °C)[1]
Power requirements	100 VAC @ 50/60 Hz 115 VAC @ 50/60 Hz 220-240 VAC @ 50/60 Hz 165 watts
Physical dimensions	16.75" (W) X 8.62" (H) X 23" (D)
Weight	Approximately 48 lbs.
Analog outputs	6 voltage outputs; 0–100 mV, 1, 5, 10 V (user selectable), 5% of full-scale over/under range, 12 bit resolution, user selectable for measurement input
Digital outputs	1 power fail relay Form C, 10 digital relays Form A, user selectable alarm output, relay logic, 100 mA @ 200 VDC
Digital inputs	16 digital inputs, user select programmable, TTL level, pulled high
Serial Ports	1 RS-232 or RS-485 with two connectors, baud rate 1200–115200, data bits, parity, and stop bits, protocols: C-Link, MODBUS, and streaming data (all user selectable)
Ethernet connection	RJ45 connector for 10Mbs Ethernet connection, static or dynamic TCP/IP addressing

[1] In non condensing environments. Performance specifications based on operation within 20–30 °C range.

Table 1-2. Model 43*i* Optional Permeation Oven Specifications

Temperature control	Single Point 45 °C
Temperature stability	± 0.1 °C
Warm-up time	1 hour (permeation device can take 24 to 48 hours to stabilize)
Carrier gas flow	≈ 70 scc/min
Chamber size	Accepts permeation tubes up to 9 cm in total length; 1 cm in diameter
Temperature range	20–30 °C
Physical dimensions	Contained inside the Model 43*i*
Power requirements	120 VAC @ 50/60 Hz, 50 watts (in addition to the standard Model 43*i*)
Weight	Approximatedly 5 lbs. (in addition to the standard Model 43*i*)

MPU03388

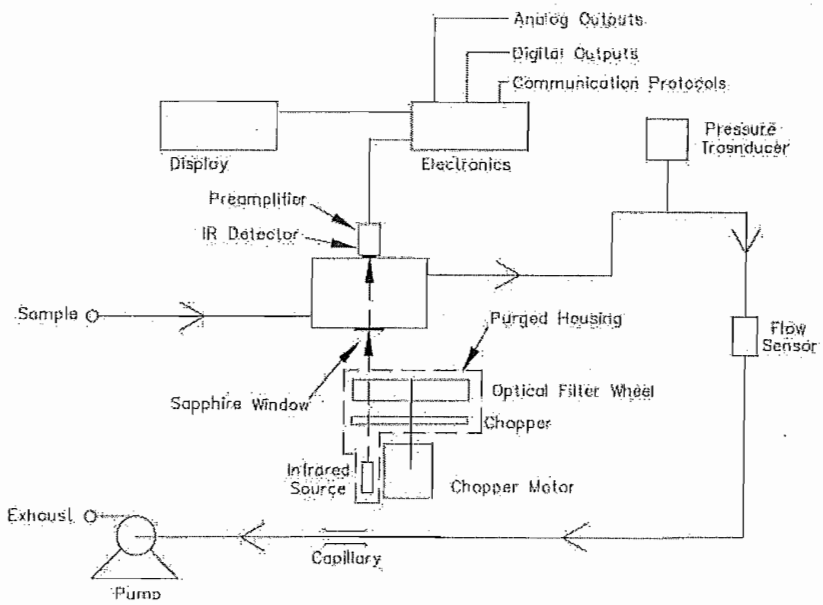

Figure 1-1. Model 410*i* Flow Schematic

Specifications

Table 1-1. Model 410*i* Specifications CO_2

Preset ranges	Standard: 0-200, 500, 1000, 2000, 5000, 10000 ppm High Level: 0-0.5, 1, 2, 5, 10, 20, 25%
Custom ranges	Standard: 0-200 to 10000 ppm High Level: 0-0.5 to 25%
Zero noise	Standard: 0.5 ppm RMS (60 second averaging time) High Level: 20 ppm RMS (60 second averaging time)
Minimum detectable limit	Standard: 1 ppm High Level: 40 ppm
Zero drift (24 hour)	± 1.0 ppm
Span drift (24 hour)	± 2% span concentration
Response time	90 seconds (30 second averaging time)
Linearity	± 1.5% of span (at concentrations of 10 to 100% of span)
Sample flow rate	1.0 LPM
Operating temperature	5–45 °C

Power requirements	100 VAC @ 50/60 Hz 115 VAC @ 50/60 Hz 220–240 VAC @ 50/60 Hz 275 watts
Physical dimensions	16.75" (W) X 8.62" (H) X 23" (D)
Weight	Approximately 39 lbs.
Analog outputs	6 voltage outputs; 0–100 mV, 1, 5, 10 V (User selectable), 5% of full-scale over/under range, 12 bit resolution, user selectable for measurement input
Digital outputs	1 power fail relay Form C, 10 digital relays Form A, user selectable alarm output, relay logic, 100 mA @ 200 VDC
Digital inputs	16 digital inputs, user select programmable, TTL level, pulled high
Serial Ports	1 RS-232 or RS-485 with two connectors, baud rate 1200–115200, Protocols: C-Link, MODBUS, and streaming data (all user selectable)
Ethernet connection	RJ45 connector for 10Mbs Ethernet connection, static or dynamic TCP/IP addressing

MPU03390

APPENDIX G

CEM INSTRUMENT INFORMATION SHEETS

INTERPOLL LABORATORIES, INC.
(763) 786-6020

CEM Relative Accuracy Certification Instrument Information Sheet

Plant Name: Manitowoc Public Utilities

Pollutant Gas Monitor Data:

Vendor: Thermo

Model: 43i S/N 0908635559

Location: S20 stack

Gas (es): ☑ SO_2 ☐ NOx ☐ CO

Type of System: ☐ In-Situ ☐ Extractive ☑ Dilution

Installation Date: 10 Sept. 09

Start-Up Date: 10 Sept. 09

Data Recording System:

☐ Strip Chart Recorder ☑ Data Logger System

☑ Computer

Relative Accuracy Certification Units:

☐ ppm, dry ☐ LB/10^6BTU by O_2 F-Factor

☑ ppm, wet ☐ LB/10^6BTU by CO_2 F-Factor

☐ LBS/HR

Span Value (ppm):

SO_2 0 - 1200

NOx 0 - 500

CO

Signature of Person Responsible for Data

Plant Location: Manitowoc, WI

Diluent Monitor Data:

Vendor: Thermo

Model: 410i S/N 0811429266

Location: S20 stack

Gas: ☐ O_2 ☐ CO_2

Type of System: ☑ In-Situ ☐ Extractive

Installation Date: 08 Sept. 08

Start-Up Date: 08 Sept. 08

Data Recording System:

☐ Strip Chart Recorder ☑ Data Logger System

☑ Computer

Output Units:

☐ $\%O_2$, dry ☐ $\%CO_2$, dry

☐ $\%O_2$, wet ☑ $\%CO_2$, wet

Span Gas Values (% v/v):

*********Oxygen********	***Carbon Dioxide***
Low	5.15
High	17.21

9-18-09

Date

1

MPU03392

INTERPOLL LABORATORIES, INC.
(763) 786-6020

CEM Relative Accuracy Certification Instrument Information Sheet

Plant Name: Manitowoc Public Utilities

Plant Location: Manitowoc, WI

Pollutant Gas Monitor Data:

Vendor: Thermo

Model: 421-D S/N 0908635558

Location: 520 stack

Gas (es): ☐ SO_2 ☑ NOx ☐ CO

Type of System: ☐ In-Situ ☐ Extractive ☑ Dilution

Installation Date: 10 Sept. 09

Start-Up Date: 10 Sept. 09

Diluent Monitor Data:

Vendor: Thermo

Model: 410i S/N 0811429266

Location: 520 stack

Gas: ☐ O_2 ☑ CO_2

Type of System: ☑ In-Situ ☐ Extractive

Installation Date: 08 Sept. 08

Start-Up Date: 08 Sept. 08

Data Recording System:

☐ Strip Chart Recorder ☑ Data Logger System

☑ Computer

Data Recording System:

☐ Strip Chart Recorder ☑ Data Logger System

☑ Computer

Relative Accuracy Certification Units:

☐ ppm, dry ☐ LB/10^6BTU by O_2 F-Factor

☑ ppm, wet ☑ LB/10^6BTU by CO_2 F-Factor

☐ LBS/HR

Output Units:

☐ $\%O_2$, dry ☐ $\%\ CO_2$, dry

☐ $\%O_2$, wet ☑ $\%\ CO_2$, wet

Span Value (ppm):

SO_2 0-1200

NOx 0-500

CO

Span Gas Values (% v/v):

*********Oxygen********

Carbon Dioxide

Low J.F. 5.15

High 17.21

Signature of Person Responsible for Data

9-18-09

Date

2

MPU03393

INTERPOLL LABORATORIES, INC.
(763) 786-6020

CEM Relative Accuracy Certification Instrument Information Sheet

Plant Name: MANITOWOC Public UTILITIES

Plant Location:

Pollutant Gas Monitor Data:

Vendor: Thermo Environmental

Model: 48i S/N 48iCM08270019

Location: S20 STACK

Gas (es): ☐ SO2 ☐ NOx ☒ CO

Type of System: ☐ In-Situ ☐ Extractive ☒ Dilution

Probe Manufacturer: EPM

Installation Date: 16 AUG 2012

Start-Up Date: 16 AUG 2012

Data Recording System:

☐ Strip Chart Recorder ☒ Data Logger System

☐ Computer

Relative Accuracy Certification Units:

☐ ppm, dry ☐ LB/106BTU by O2 F-Factor

☒ ppm, wet ☐ LB/106BTU by CO2 F-Factor

Span Value (ppm):

SO2

NOx

CO 100/5000

Signature of Person Responsible for Data

Diluent Monitor Data:

Vendor:

Model: S/N

Location:

Gas: ☐ O2 ☐ CO2

Type of System: ☐ In-Situ ☐ Extractive ☐ Dilution

Installation Date:

Start-Up Date:

Data Recording System:

☐ Strip Chart Recorder ☐ Data Logger System

☐ Computer

Output Units:

☐ %O2, dry ☐ % CO2, dry

☐ %O2, wet ☐ % CO2, wet

Span Gas Values (% v/v):

	********Oxygen********	***Carbon Dioxide***
Low		
High		

Date

MPU03394

APPENDIX H

CEM DATA

S 20
~~BOILER 8~~ GAS
RATA
RUN #1

Average Data

Plant: Manitowoc Public Utilities
Interval: 1 Minute
Type: Roll
Report Period: 07/23/2013 14:50 Through 07/23/2013 15:10
Time Online Criteria: 1 minute(s)

Source	S20								
Parameter)Unit(	S20CO#M (#/MMBTU)	S20CPCO2 (PERCENT)	S20CPNOX (PPM)	S20CPSO2 (PPM)	S20FFACT (MMBTU/CF)	S20NOX#M (LB/MMBTU)	S20PCO (PPM)	S20SO2#M (LB/MMBTU)	S20STEAM (KLBS/HR)
07/23/13 14:50	0.108	5.0	22.1	44.4	1,877.0	0.099	39.7	0.277	77
07/23/13 14:51	0.107	5.1	22.1	44.9	1,877.0	0.097	39.6	0.274	85
07/23/13 14:52	0.108	5.0	22.5	43.2	1,877.0	0.101	39.6	0.269	78
07/23/13 14:53	0.107	5.0	22.2	42.8	1,877.0	0.100	39.3	0.267	78
07/23/13 14:54	0.108	5.0	22.4	43.3	1,877.0	0.100	39.4	0.270	85
07/23/13 14:55	0.109	5.0	22.7	43.8	1,877.0	0.102	39.8	0.273	76
07/23/13 14:56	0.113	5.0	22.7	43.0	1,877.0	0.102	41.4	0.268	82
07/23/13 14:57	0.111	5.0	22.5	42.9	1,877.0	0.101	40.8	0.267	83
07/23/13 14:58	0.111	5.0	22.5	43.4	1,877.0	0.101	40.7	0.270	77
07/23/13 14:59	0.109	5.1	22.2	42.4	1,877.0	0.098	40.3	0.259	85
07/23/13 15:00	0.107	5.0	21.7	43.1	1,877.0	0.097	39.1	0.269	83
07/23/13 15:01	0.106	5.0	21.9	42.1	1,877.0	0.098	38.9	0.262	76
07/23/13 15:02	0.105	5.1	21.5	41.8	1,877.0	0.094	39.0	0.255	84
07/23/13 15:03	0.103	5.0	21.5	41.3	1,877.0	0.096	37.8	0.257	81
07/23/13 15:04	0.104	5.0	21.6	41.4	1,877.0	0.097	38.2	0.258	77
07/23/13 15:05	0.105	5.0	21.5	41.5	1,877.0	0.096	38.5	0.259	85
07/23/13 15:06	0.101	5.0	21.6	41.6	1,877.0	0.097	37.0	0.259	79
07/23/13 15:07	0.101	5.0	21.9	40.8	1,877.0	0.098	37.2	0.254	77
07/23/13 15:08	0.104	5.0	21.7	38.8	1,877.0	0.097	38.0	0.242	85
07/23/13 15:09	0.102	5.0	21.9	40.0	1,877.0	0.098	37.3	0.249	77
07/23/13 15:10	0.106	5.0	22.0	40.2	1,877.0	0.099	38.7	0.251	80
Average	0.106	5.0	22.0	42.2	1,877.0	0.098	39.1	0.262	80
Minimum	0.101	5.0	21.5	38.8	1,877.0	0.094	37.0	0.242	76
Maximum	0.113	5.1	22.7	44.9	1,877.0	0.102	41.4	0.277	85
Summation	2.235	105.3	462.7	886.7	39,417.0	2.068	820.3	5.509	1,690
Included Data Points	21	21	21	21	21	21	21	21	21
Total number of Data Points	21	21	21	21	21	21	21	21	21

F = Unit Offline E = Exceedance C = Calibration S = Substituted I = Invalid
M = Maintenance T = Out Of Control * = Suspect U = Startup D = Shutdown

MPU03396

S20 - GAS RATA
RUN #2

Average Data

Plant: Manitowoc Public Utilities
Interval: 1 Minute
Type: Roll
Report Period: 07/23/2013 15:20 Through 07/23/2013 15:40
Time Online Criteria: 1 minute(s)

Source	S20								
Parameter)Unit(	S20CO#M (#/MMBTU)	S20CPCO2 (PERCENT)	S20CPNOX (PPM)	S20CPSO2 (PPM)	S20FFACT (MMBTU/CF)	S20NOX#M (LB/MMBTU)	S20PCO (PPM)	S20SO2#M (LB/MMBTU)	S20STEAM (KLBS/HR)
07/23/13 15:20	0.103	5.0	21.3	39.6	1,877.0	0.095	37.9	0.247	82
07/23/13 15:21	0.099	5.1	21.1	39.9	1,877.0	0.093	37.0	0.244	76
07/23/13 15:22	0.096	5.1	21.7	39.0	1,877.0	0.095	35.9	0.238	85
07/23/13 15:23	0.098	5.0	21.9	37.5	1,877.0	0.098	35.7	0.234	80
07/23/13 15:24	0.099	5.0	22.0	37.2	1,877.0	0.099	36.4	0.232	76
07/23/13 15:25	0.101	5.0	21.7	38.0	1,877.0	0.097	36.9	0.237	86
07/23/13 15:26	0.102	5.0	22.3	38.2	1,877.0	0.100	37.0	0.238	79
07/23/13 15:27	0.100	5.0	21.9	38.4	1,877.0	0.098	36.8	0.239	77
07/23/13 15:28	0.101	4.9	21.8	37.5	1,877.0	0.100	36.4	0.238	85
07/23/13 15:29	0.102	4.9	21.8	36.5	1,877.0	0.100	36.6	0.232	81
07/23/13 15:30	0.099	5.0	21.6	39.1	1,877.0	0.097	36.3	0.244	77
07/23/13 15:31	0.101	5.0	21.3	39.3	1,877.0	0.095	36.8	0.245	84
07/23/13 15:32	0.099	5.0	21.4	39.0	1,877.0	0.096	36.4	0.243	83
07/23/13 15:33	0.100	5.0	21.1	40.2	1,877.0	0.095	36.7	0.251	76
07/23/13 15:34	0.102	5.0	21.6	39.1	1,877.0	0.097	37.0	0.244	80
07/23/13 15:35	0.104	4.9	21.9	37.0	1,877.0	0.100	37.6	0.235	84
07/23/13 15:36	0.104	4.9	22.0	37.8	1,877.0	0.101	37.7	0.240	76
07/23/13 15:37	0.105	4.9	22.0	38.5	1,877.0	0.101	37.8	0.245	79
07/23/13 15:38	0.104	5.0	22.0	37.5	1,877.0	0.099	37.7	0.234	85
07/23/13 15:39	0.101	5.1	21.9	36.7	1,877.0	0.096	37.6	0.224	77
07/23/13 15:40	0.098	5.1	21.5	37.1	1,877.0	0.094	37.0	0.227	82
Average	0.101	5.0	21.7	38.2	1,877.0	0.097	36.9	0.239	80
Minimum	0.096	4.9	21.1	36.5	1,877.0	0.093	35.7	0.224	76
Maximum	0.105	5.1	22.3	40.2	1,877.0	0.101	37.9	0.251	86
Summation	2.118	104.9	455.8	803.1	39,417.0	2.046	775.2	5.011	1,690
Included Data Points	21	21	21	21	21	21	21	21	21
Total number of Data Points	21	21	21	21	21	21	21	21	21

2

MPU03397

F = Unit Offline E = Exceedance C = Calibration S = Substituted I = Invalid
M = Maintenance T = Out Of Control * = Suspect U = Startup D = Shutdown

S20 GAS RATA
RUN #3

Average Data

Plant: Manitowoc Public Utilities
Interval: 1 Minute
Type: Roll with BAF Applied
Report Period: 07/23/2013 15:50 Through 07/23/2013 16:10
Time Online Criteria: 1 minute(s)

Source	S20								
Parameter)Unit(	S20CO#M (#/MMBTU)	S20CPCO2 (PERCENT)	S20CPNOX (PPM)	S20CPSO2 (PPM)	S20FFACT (MMBTU/CF)	S20NOX#M (LB/MMBTU)	S20PCO (PPM)	S20SO2#M (LB/MMBTU)	S20STEAM (KLBS/HR)
07/23/13 15:50	0.106	5.0	20.9	37.3	1,877.0	0.094	38.7	0.232	79
07/23/13 15:51	0.101	5.1	21.1	38.3	1,877.0	0.093	37.9	0.234	85
07/23/13 15:52	0.102	5.2	20.6	41.5	1,877.0	0.089	38.5	0.249	79
07/23/13 15:53	0.106	5.1	21.3	42.0	1,877.0	0.094	39.6	0.257	79
07/23/13 15:54	0.106	5.1	20.7	41.8	1,877.0	0.091	39.5	0.255	84
07/23/13 15:55	0.102	5.1	20.5	42.6	1,877.0	0.090	38.0	0.260	81
07/23/13 15:56	0.102	5.1	20.6	43.6	1,877.0	0.091	38.1	0.266	77
07/23/13 15:57	0.103	5.0	20.3	44.9	1,877.0	0.091	38.1	0.280	82
07/23/13 15:58	0.103	5.0	20.6	44.1	1,877.0	0.092	37.8	0.275	82
07/23/13 15:59	0.106	5.0	20.8	43.9	1,877.0	0.093	38.7	0.274	78
07/23/13 16:00	0.103	5.1	20.5	44.5	1,877.0	0.090	38.2	0.272	79
07/23/13 16:01	0.102	5.0	20.8	42.2	1,877.0	0.093	37.4	0.263	85
07/23/13 16:02	0.103	5.1	20.8	40.5	1,877.0	0.091	38.2	0.247	79
07/23/13 16:03	0.102	5.1	20.7	40.2	1,877.0	0.091	38.3	0.246	78
07/23/13 16:04	0.101	5.1	20.9	38.6	1,877.0	0.092	37.8	0.236	86
07/23/13 16:05	0.103	5.1	20.8	38.9	1,877.0	0.091	38.3	0.238	78
07/23/13 16:06	0.102	5.1	20.7	38.1	1,877.0	0.091	38.1	0.233	77
07/23/13 16:07	0.103	5.1	21.2	38.8	1,877.0	0.093	38.4	0.237	86
07/23/13 16:08	0.101	5.1	20.5	40.7	1,877.0	0.090	38.1	0.249	82
07/23/13 16:09	0.096	5.2	20.5	40.7	1,877.0	0.088	36.2	0.244	78
07/23/13 16:10	0.098	5.1	20.7	39.2	1,877.0	0.091	36.5	0.239	83
Average	0.102	5.1	20.7	41.1	1,877.0	0.091	38.1	0.252	81
Minimum	0.096	5.0	20.3	37.3	1,877.0	0.088	36.2	0.232	77
Maximum	0.106	5.2	21.3	44.9	1,877.0	0.094	39.6	0.280	86
Summation	2.151	106.8	435.5	862.4	39,417.0	1.919	800.4	5.286	1,697
Included Data Points	21	21	21	21	21	21	21	21	21
Total number of Data Points	21	21	21	21	21	21	21	21	21

3

MPU03398

F = Unit Offline E = Exceedance C = Calibration S = Substituted I = Invalid
M = Maintenance T = Out Of Control * = Suspect U = Startup D = Shutdown

S20 GAS RATA
RUN #4

Average Data

Plant: Manitowoc Public Utilities
Interval: 1 Minute
Type: Roll with BAF Applied
Report Period: 07/23/2013 16:20 Through 07/23/2013 16:40
Time Online Criteria: 1 minute(s)

Source	S20								
Parameter (Unit)	S20CO#M (#/MMBTU)	S20CPCO2 (PERCENT)	S20CPNOX (PPM)	S20CPSO2 (PPM)	S20FFACT (MMBTU/CF)	S20NOX#M (LB/MMBTU)	S20PCO (PPM)	S20SO2#M (LB/MMBTU)	S20STEAM (KLBS/HR)
07/23/13 16:20	0.098	5.1	20.8	39.9	1,877.0	0.091	36.7	0.244	79
07/23/13 16:21	0.099	5.0	20.6	39.3	1,877.0	0.092	36.2	0.245	87
07/23/13 16:22	0.099	5.1	20.5	39.7	1,877.0	0.090	36.5	0.243	83
07/23/13 16:23	0.096	5.1	20.3	39.1	1,877.0	0.089	35.9	0.239	77
07/23/13 16:24	0.092	5.1	20.5	39.1	1,877.0	0.090	34.4	0.239	83
07/23/13 16:25	0.093	5.1	20.8	38.3	1,877.0	0.091	34.5	0.234	80
07/23/13 16:26	0.098	5.0	20.9	37.2	1,877.0	0.094	35.7	0.232	77
07/23/13 16:27	0.095	5.1	20.6	37.7	1,877.0	0.091	35.6	0.230	87
07/23/13 16:28	0.096	5.1	20.6	38.3	1,877.0	0.091	35.8	0.234	78
07/23/13 16:29	0.095	5.1	20.3	38.8	1,877.0	0.089	35.7	0.237	81
07/23/13 16:30	0.094	5.1	20.5	38.1	1,877.0	0.090	34.9	0.233	84
07/23/13 16:31	0.096	5.1	20.4	38.4	1,877.0	0.090	35.7	0.235	77
07/23/13 16:32	0.096	5.1	20.4	39.1	1,877.0	0.090	36.1	0.239	85
07/23/13 16:33	0.093	5.1	20.4	38.9	1,877.0	0.090	34.6	0.238	79
07/23/13 16:34	0.095	5.1	20.5	39.0	1,877.0	0.090	35.6	0.238	78
07/23/13 16:35	0.095	5.1	20.5	39.7	1,877.0	0.090	35.5	0.243	86
07/23/13 16:36	0.098	5.1	20.4	39.9	1,877.0	0.090	36.5	0.244	79
07/23/13 16:37	0.099	5.1	20.5	40.4	1,877.0	0.090	37.1	0.247	80
07/23/13 16:38	0.099	5.1	20.3	40.9	1,877.0	0.089	36.8	0.250	86
07/23/13 16:39	0.099	5.2	20.0	42.2	1,877.0	0.086	37.4	0.253	78
07/23/13 16:40	0.096	5.1	20.0	41.7	1,877.0	0.088	36.2	0.255	79
Average	0.096	5.1	20.5	39.3	1,877.0	0.090	35.9	0.241	81
Minimum	0.092	5.0	20.0	37.2	1,877.0	0.086	34.4	0.230	77
Maximum	0.099	5.2	20.9	42.2	1,877.0	0.094	37.4	0.255	87
Summation	2.021	107.0	429.8	825.7	39,417.0	1.891	753.4	5.052	1,703
Included Data Points	21	21	21	21	21	21	21	21	21
Total number of Data Points	21	21	21	21	21	21	21	21	21

4

MPU03399

F = Unit Offline **E = Exceedance** C = Calibration **S = Substituted** I = Invalid
M = Maintenance **T = Out Of Control** * = Suspect **U = Startup** **D = Shutdown**

S20 GAS RATA
RUN #5

Average Data

Plant: Manitowoc Public Utilities
Interval: 1 Minute
Type: Roll with BAF Applied
Report Period: 07/23/2013 16:50 Through 07/23/2013 17:10
Time Online Criteria: 1 minute(s)

Source	S20								
Parameter)Unit(	S20CO#M (#/MMBTU)	S20CPCO2 (PERCENT)	S20CPNOX (PPM)	S20CPSO2 (PPM)	S20FFACT (MMBTU/CF)	S20NOX#M (LB/MMBTU)	S20PCO (PPM)	S20SO2#M (LB/MMBTU)	S20STEAM (KLBS/HR)
07/23/13 16:50	0.094	5.1	20.5	38.7	1,877.0	0.090	34.9	0.236	80
07/23/13 16:51	0.094	5.1	20.3	39.2	1,877.0	0.089	35.3	0.239	80
07/23/13 16:52	0.095	5.1	20.4	38.6	1,877.0	0.090	35.7	0.236	85
07/23/13 16:53	0.095	5.1	21.1	38.1	1,877.0	0.093	35.4	0.233	78
07/23/13 16:54	0.097	5.0	20.6	38.9	1,877.0	0.092	35.9	0.242	79
07/23/13 16:55	0.095	5.1	20.4	40.3	1,877.0	0.090	35.4	0.246	85
07/23/13 16:56	0.095	5.1	20.2	40.2	1,877.0	0.089	35.5	0.246	75
07/23/13 16:57	0.099	5.1	20.7	40.8	1,877.0	0.091	36.7	0.249	86
07/23/13 16:58	0.096	5.1	19.8	42.1	1,877.0	0.087	36.3	0.257	80
07/23/13 16:59	0.094	5.1	20.3	42.2	1,877.0	0.089	35.2	0.258	78
07/23/13 17:00	0.097	5.1	20.3	41.6	1,877.0	0.089	36.4	0.254	86
07/23/13 17:01	0.101	5.1	20.4	40.3	1,877.0	0.090	37.6	0.246	82
07/23/13 17:02	0.099	5.1	20.0	39.5	1,877.0	0.088	36.8	0.241	76
07/23/13 17:03	0.095	5.1	19.8	39.1	1,877.0	0.087	35.5	0.239	86
07/23/13 17:04	0.097	5.1	20.2	39.9	1,877.0	0.089	36.3	0.244	77
07/23/13 17:05	0.101	5.0	20.3	39.3	1,877.0	0.091	37.4	0.245	82
07/23/13 17:06	0.100	5.1	19.9	40.5	1,877.0	0.087	37.0	0.247	85
07/23/13 17:07	0.097	5.1	20.0	41.2	1,877.0	0.088	36.1	0.252	78
07/23/13 17:08	0.100	5.1	20.0	40.8	1,877.0	0.088	37.4	0.249	79
07/23/13 17:09	0.100	5.1	20.0	42.2	1,877.0	0.088	37.4	0.258	84
07/23/13 17:10	0.102	5.1	20.3	41.3	1,877.0	0.089	37.8	0.252	82
Average	0.097	5.1	20.3	40.2	1,877.0	0.089	36.3	0.246	81
Minimum	0.094	5.0	19.8	38.1	1,877.0	0.087	34.9	0.233	75
Maximum	0.102	5.1	21.1	42.2	1,877.0	0.093	37.8	0.258	86
Summation	2.043	106.9	425.5	844.8	39,417.0	1.874	762.0	5.169	1,703
Included Data Points	21	21	21	21	21	21	21	21	21
Total number of Data Points	21	21	21	21	21	21	21	21	21

5

MPU03400

F = Unit Offline E = Exceedance C = Calibration S = Substituted I = Invalid
M = Maintenance T = Out Of Control * = Suspect U = Startup D = Shutdown

S20 GAS RATA
RUN #6

Average Data

Plant: Manitowoc Public Utilities
Interval: 1 Minute
Type: Roll with BAF Applied
Report Period: 07/23/2013 17:20 Through 07/23/2013 17:40
Time Online Criteria: 1 minute(s)

Source	S20								
Parameter)Unit(	S20CO#M (#/MMBTU)	S20CPCO2 (PERCENT)	S20CPNOX (PPM)	S20CPSO2 (PPM)	S20FFACT (MMBTU/CF)	S20NOX#M (LB/MMBTU)	S20PCO (PPM)	S20SO2#M (LB/MMBTU)	S20STEAM (KLBS/HR)
07/23/13 17:20	0.099	5.1	20.1	41.7	1,877.0	0.088	37.0	0.255	78
07/23/13 17:21	0.098	5.2	19.7	41.1	1,877.0	0.085	37.1	0.246	84
07/23/13 17:22	0.096	5.1	20.0	40.5	1,877.0	0.088	35.8	0.247	81
07/23/13 17:23	0.099	5.1	20.5	39.6	1,877.0	0.090	36.9	0.242	77
07/23/13 17:24	0.100	5.1	20.2	39.8	1,877.0	0.089	37.3	0.243	84
07/23/13 17:25	0.099	5.1	20.2	39.6	1,877.0	0.089	37.2	0.242	82
07/23/13 17:26	0.100	5.1	20.1	39.5	1,877.0	0.088	37.2	0.241	79
07/23/13 17:27	0.098	5.2	19.9	41.6	1,877.0	0.086	37.2	0.249	85
07/23/13 17:28	0.100	5.1	20.3	40.5	1,877.0	0.089	37.2	0.247	74
07/23/13 17:29	0.099	5.1	20.4	40.4	1,877.0	0.090	37.1	0.247	84
07/23/13 17:30	0.101	5.1	20.4	40.6	1,877.0	0.090	37.8	0.248	82
07/23/13 17:31	0.100	5.1	20.3	39.1	1,877.0	0.089	37.6	0.239	76
07/23/13 17:32	0.100	5.2	20.3	38.3	1,877.0	0.087	38.1	0.229	85
07/23/13 17:33	0.099	5.2	20.7	37.8	1,877.0	0.089	37.8	0.226	78
07/23/13 17:34	0.099	5.1	20.5	37.1	1,877.0	0.090	37.4	0.227	79
07/23/13 17:35	0.098	5.2	20.4	37.8	1,877.0	0.088	37.3	0.226	87
07/23/13 17:36	0.100	5.2	20.6	37.8	1,877.0	0.089	37.7	0.226	78
07/23/13 17:37	0.102	5.2	20.3	38.5	1,877.0	0.087	38.6	0.231	78
07/23/13 17:38	0.103	5.1	20.6	38.6	1,877.0	0.091	38.7	0.236	86
07/23/13 17:39	0.103	5.1	20.2	39.4	1,877.0	0.089	39.0	0.241	78
07/23/13 17:40	0.100	5.2	20.3	40.2	1,877.0	0.087	38.0	0.241	82
Average	0.100	5.1	20.3	39.5	1,877.0	0.088	37.5	0.239	81
Minimum	0.096	5.1	19.7	37.1	1,877.0	0.085	35.8	0.226	74
Maximum	0.103	5.2	20.7	41.7	1,877.0	0.091	39.0	0.255	87
Summation	2.093	107.9	426.0	829.5	39,417.0	1.858	788.0	5.029	1,697
Included Data Points	21	21	21	21	21	21	21	21	21
Total number of Data Points	21	21	21	21	21	21	21	21	21

6

MPU03401

F = Unit Offline E = Exceedance C = Calibration S = Substituted I = Invalid
M = Maintenance T = Out Of Control * = Suspect U = Startup D = Shutdown

S20 GAS RATA
RUN #7

Average Data

Plant: Manitowoc Public Utilities
Interval: 1 Minute
Type: Roll with BAF Applied
Report Period: 07/23/2013 17:50 Through 07/23/2013 18:10
Time Online Criteria: 1 minute(s)

Source	S20								
Parameter)Unit(	S20CO#M (#/MMBTU)	S20CPCO2 (PERCENT)	S20CPNOX (PPM)	S20CPSO2 (PPM)	S20FFACT (MMBTU/CF)	S20NOX#M (LB/MMBTU)	S20PCO (PPM)	S20SO2#M (LB/MMBTU)	S20STEAM (KLBS/HR)
07/23/13 17:50	0.103	5.2	20.0	41.3	1,877.0	0.086	39.1	0.247	78
07/23/13 17:51	0.101	5.2	19.9	41.4	1,877.0	0.086	38.5	0.248	80
07/23/13 17:52	0.101	5.2	19.8	41.0	1,877.0	0.085	38.3	0.246	84
07/23/13 17:53	0.099	5.1	20.1	42.0	1,877.0	0.088	37.4	0.257	80
07/23/13 17:54	0.099	5.2	20.1	40.0	1,877.0	0.087	37.8	0.240	79
07/23/13 17:55	0.097	5.2	20.3	37.7	1,877.0	0.087	36.9	0.226	87
07/23/13 17:56	0.097	5.2	20.1	39.5	1,877.0	0.087	36.9	0.237	78
07/23/13 17:57	0.097	5.2	20.3	39.9	1,877.0	0.087	37.0	0.239	81
07/23/13 17:58	0.095	5.2	20.1	39.6	1,877.0	0.087	36.2	0.237	85
07/23/13 17:59	0.096	5.2	19.9	40.3	1,877.0	0.086	36.6	0.241	78
07/23/13 18:00	0.098	5.2	20.1	40.7	1,877.0	0.087	37.1	0.244	80
07/23/13 18:01	0.098	5.2	20.4	39.8	1,877.0	0.088	37.4	0.238	84
07/23/13 18:02	0.099	5.2	20.3	41.0	1,877.0	0.087	37.7	0.246	78
07/23/13 18:03	0.100	5.2	20.6	39.9	1,877.0	0.089	37.7	0.239	78
07/23/13 18:04	0.100	5.2	20.4	40.8	1,877.0	0.088	37.8	0.244	86
07/23/13 18:05	0.099	5.2	20.7	39.6	1,877.0	0.089	37.7	0.237	78
07/23/13 18:06	0.097	5.2	20.8	37.8	1,877.0	0.090	36.9	0.226	81
07/23/13 18:07	0.098	5.2	20.3	39.2	1,877.0	0.087	37.4	0.235	84
07/23/13 18:08	0.100	5.1	20.2	38.7	1,877.0	0.089	37.7	0.236	84
07/23/13 18:09	0.097	5.2	19.7	39.1	1,877.0	0.085	37.1	0.234	78
07/23/13 18:10	0.100	5.2	20.2	38.1	1,877.0	0.087	37.7	0.228	78
Average	0.099	5.2	20.2	39.9	1,877.0	0.087	37.5	0.239	81
Minimum	0.095	5.1	19.7	37.7	1,877.0	0.085	36.2	0.226	78
Maximum	0.103	5.2	20.8	42.0	1,877.0	0.090	39.1	0.257	87
Summation	2.071	109.0	424.3	837.4	39,417.0	1.832	786.9	5.025	1,699
Included Data Points	21	21	21	21	21	21	21	21	21
Total number of Data Points	21	21	21	21	21	21	21	21	21

7

MPU03402

F = Unit Offline E = Exceedance C = Calibration S = Substituted I = Invalid
M = Maintenance T = Out Of Control * = Suspect U = Startup D = Shutdown

S20 Gas RATA
Run #8

Average Data

Plant: Manitowoc Public Utilities
Interval: 1 Minute
Type: Roll with BAF Applied
Report Period: 07/23/2013 18:20 Through 07/23/2013 18:40
Time Online Criteria: 1 minute(s)

Source	S20								
Parameter)Unit(	S20CO#M (#/MMBTU)	S20CPCO2 (PERCENT)	S20CPNOX (PPM)	S20CPSO2 (PPM)	S20FFACT (MMBTU/CF)	S20NOX#M (LB/MMBTU)	S20PCO (PPM)	S20SO2#M (LB/MMBTU)	S20STEAM (KLBS/HR)
07/23/13 18:20	0.094	5.2	20.4	41.0	1,877.0	0.088	35.5	0.246	80
07/23/13 18:21	0.095	5.2	20.5	40.6	1,877.0	0.088	36.3	0.243	78
07/23/13 18:22	0.093	5.2	20.3	41.0	1,877.0	0.087	35.6	0.246	86
07/23/13 18:23	0.093	5.2	20.2	41.3	1,877.0	0.087	35.6	0.247	76
07/23/13 18:24	0.096	5.2	20.2	40.2	1,877.0	0.087	36.2	0.241	82
07/23/13 18:25	0.096	5.2	20.5	41.2	1,877.0	0.088	36.4	0.247	84
07/23/13 18:26	0.095	5.2	20.0	44.5	1,877.0	0.086	36.3	0.267	77
07/23/13 18:27	0.097	5.2	20.4	43.3	1,877.0	0.088	36.7	0.259	81
07/23/13 18:28	0.099	5.1	20.8	42.3	1,877.0	0.091	37.4	0.258	84
07/23/13 18:29	0.102	5.1	20.7	39.7	1,877.0	0.091	38.3	0.243	75
07/23/13 18:30	0.099	5.1	20.5	38.6	1,877.0	0.090	37.0	0.236	85
07/23/13 18:31	0.098	5.2	20.8	39.3	1,877.0	0.090	37.2	0.235	80
07/23/13 18:32	0.097	5.2	20.2	40.4	1,877.0	0.087	36.9	0.242	78
07/23/13 18:33	0.094	5.2	20.1	39.4	1,877.0	0.087	36.0	0.236	86
07/23/13 18:34	0.095	5.2	20.5	37.7	1,877.0	0.088	36.1	0.226	77
07/23/13 18:35	0.093	5.2	20.3	39.1	1,877.0	0.087	35.4	0.234	79
07/23/13 18:36	0.093	5.2	20.7	39.9	1,877.0	0.089	35.6	0.239	86
07/23/13 18:37	0.096	5.2	20.3	39.5	1,877.0	0.087	36.2	0.237	78
07/23/13 18:38	0.096	5.2	20.4	40.4	1,877.0	0.088	36.7	0.242	78
07/23/13 18:39	0.095	5.2	20.8	39.0	1,877.0	0.090	36.0	0.234	85
07/23/13 18:40	0.096	5.2	20.7	38.7	1,877.0	0.089	36.5	0.232	78
Average	0.096	5.2	20.4	40.3	1,877.0	0.088	36.4	0.242	81
Minimum	0.093	5.1	20.0	37.7	1,877.0	0.086	35.4	0.226	75
Maximum	0.102	5.2	20.8	44.5	1,877.0	0.091	38.3	0.267	86
Summation	2.012	108.9	429.3	847.1	39,417.0	1.853	763.9	5.090	1,693
Included Data Points	21	21	21	21	21	21	21	21	21
Total number of Data Points	21	21	21	21	21	21	21	21	21

8

F = Unit Offline E = Exceedance C = Calibration S = Substituted I = Invalid
M = Maintenance T = Out Of Control * = Suspect U = Startup D = Shutdown

MPU03403

S20 Gas RATA
Run #9

Average Data

Plant: Manitowoc Public Utilities
Interval: 1 Minute
Type: Roll with BAF Applied
Report Period: 07/23/2013 18:50 Through 07/23/2013 19:10
Time Online Criteria: 1 minute(s)

Source	S20								
Parameter)Unit(	S20CO#M (#/MMBTU)	S20CPCO2 (PERCENT)	S20CPNOX (PPM)	S20CPSO2 (PPM)	S20FFACT (MMBTU/CF)	S20NOX#M (LB/MMBTU)	S20PCO (PPM)	S20SO2#M (LB/MMBTU)	S20STEAM (KLBS/HR)
07/23/13 18:50	0.091	5.2	20.7	40.7	1,877.0	0.089	34.8	0.244	85
07/23/13 18:51	0.091	5.2	20.9	38.9	1,877.0	0.090	34.7	0.233	79
07/23/13 18:52	0.093	5.2	21.2	40.9	1,877.0	0.091	35.2	0.245	78
07/23/13 18:53	0.092	5.2	20.9	42.7	1,877.0	0.090	35.1	0.256	87
07/23/13 18:54	0.093	5.2	20.7	46.3	1,877.0	0.089	35.3	0.277	77
07/23/13 18:55	0.091	5.2	21.0	44.3	1,877.0	0.091	34.7	0.265	81
07/23/13 18:56	0.092	5.2	20.9	42.0	1,877.0	0.090	35.0	0.252	87
07/23/13 18:57	0.092	5.2	20.6	42.9	1,877.0	0.089	35.2	0.257	78
07/23/13 18:58	0.092	5.2	21.1	43.6	1,877.0	0.091	35.0	0.261	77
07/23/13 18:59	0.095	5.1	21.4	42.1	1,877.0	0.094	35.5	0.257	87
07/23/13 19:00	0.095	5.2	20.9	41.4	1,877.0	0.090	36.0	0.248	78
07/23/13 19:01	0.095	5.2	20.8	42.4	1,877.0	0.090	35.8	0.254	79
07/23/13 19:02	0.097	5.1	20.4	43.4	1,877.0	0.090	36.4	0.265	85
07/23/13 19:03	0.099	5.2	20.6	43.5	1,877.0	0.089	37.3	0.261	77
07/23/13 19:04	0.096	5.2	20.8	41.7	1,877.0	0.090	36.4	0.250	84
07/23/13 19:05	0.095	5.2	20.1	44.5	1,877.0	0.087	35.8	0.267	81
07/23/13 19:06	0.094	5.1	20.9	41.6	1,877.0	0.092	35.2	0.254	77
07/23/13 19:07	0.095	5.2	20.5	41.8	1,877.0	0.088	36.2	0.250	86
07/23/13 19:08	0.095	5.2	20.8	41.3	1,877.0	0.090	36.2	0.247	75
07/23/13 19:09	0.096	5.2	21.1	38.8	1,877.0	0.091	36.3	0.232	82
07/23/13 19:10	0.097	5.2	20.8	41.0	1,877.0	0.090	36.9	0.246	83
Average	0.094	5.2	20.8	42.2	1,877.0	0.090	35.7	0.253	81
Minimum	0.091	5.1	20.1	38.8	1,877.0	0.087	34.7	0.232	75
Maximum	0.099	5.2	21.4	46.3	1,877.0	0.094	37.3	0.277	87
Summation	1.976	108.9	437.1	885.8	39,417.0	1.891	749.0	5.321	1,703
Included Data Points	21	21	21	21	21	21	21	21	21
Total number of Data Points	21	21	21	21	21	21	21	21	21

9

F = Unit Offline **E = Exceedance** C = Calibration **S = Substituted** I = Invalid
M = Maintenance **T = Out Of Control** * = Suspect **U = Startup** **D = Shutdown**

MPU03404

S20 Gas RATA
Run #10

Average Data

Plant: Manitowoc Public Utilities
Interval: 1 Minute
Type: Roll with BAF Applied
Report Period: 07/23/2013 19:20 Through 07/23/2013 19:40
Time Online Criteria: 1 minute(s)

Source	S20								
Parameter)Unit(	S20CO#M (#/MMBTU)	S20CPCO2 (PERCENT)	S20CPNOX (PPM)	S20CPSO2 (PPM)	S20FFACT (MMBTU/CF)	S20NOX#M (LB/MMBTU)	S20PCO (PPM)	S20SO2#M (LB/MMBTU)	S20STEAM (KLBS/HR)
07/23/13 19:20	0.099	5.1	21.3	41.6	1,877.0	0.094	37.1	0.254	83
07/23/13 19:21	0.098	5.2	20.9	43.3	1,877.0	0.090	37.1	0.259	81
07/23/13 19:22	0.097	5.2	20.7	45.0	1,877.0	0.089	37.0	0.270	76
07/23/13 19:23	0.096	5.2	21.1	42.0	1,877.0	0.091	36.6	0.252	86
07/23/13 19:24	0.094	5.2	20.8	41.7	1,877.0	0.090	35.8	0.250	80
07/23/13 19:25	0.097	5.1	20.7	42.7	1,877.0	0.091	36.5	0.261	78
07/23/13 19:26	0.100	5.1	20.7	45.9	1,877.0	0.091	37.6	0.280	82
07/23/13 19:27	0.099	5.2	20.9	43.8	1,877.0	0.090	37.5	0.262	85
07/23/13 19:28	0.097	5.2	20.9	42.9	1,877.0	0.090	36.8	0.257	79
07/23/13 19:29	0.095	5.2	20.5	45.9	1,877.0	0.088	36.3	0.275	77
07/23/13 19:30	0.097	5.1	20.8	44.2	1,877.0	0.091	36.3	0.270	84
07/23/13 19:31	0.097	5.1	21.0	41.7	1,877.0	0.092	36.2	0.255	78
07/23/13 19:32	0.099	5.1	21.1	39.2	1,877.0	0.093	37.0	0.239	79
07/23/13 19:33	0.096	5.2	20.8	39.5	1,877.0	0.090	36.3	0.237	85
07/23/13 19:34	0.094	5.2	20.7	40.6	1,877.0	0.089	35.5	0.243	74
07/23/13 19:35	0.094	5.2	20.7	39.6	1,877.0	0.089	35.6	0.237	82
07/23/13 19:36	0.094	5.1	21.2	40.0	1,877.0	0.093	35.4	0.244	81
07/23/13 19:37	0.095	5.3	21.1	40.7	1,877.0	0.089	36.8	0.239	78
07/23/13 19:38	0.095	5.2	20.8	39.4	1,877.0	0.090	36.3	0.236	85
07/23/13 19:39	0.099	5.2	20.9	41.4	1,877.0	0.090	37.6	0.248	79
07/23/13 19:40	0.099	5.2	21.0	44.1	1,877.0	0.091	37.8	0.264	77
Average	0.097	5.2	20.9	42.2	1,877.0	0.091	36.6	0.254	80
Minimum	0.094	5.1	20.5	39.2	1,877.0	0.088	35.4	0.236	74
Maximum	0.100	5.3	21.3	45.9	1,877.0	0.094	37.8	0.280	86
Summation	2.031	108.6	438.6	885.2	39,417.0	1.901	769.1	5.332	1,689
Included Data Points	21	21	21	21	21	21	21	21	21
Total number of Data Points	21	21	21	21	21	21	21	21	21

10

MPU03405

F = Unit Offline E = Exceedance C = Calibration S = Substituted I = Invalid
M = Maintenance T = Out Of Control * = Suspect U = Startup D = Shutdown

S20 High Flow RATA
Run #1

Average Data

Plant: Manitowoc Public Utilities
Interval: 1 Minute
Type: Roll
Report Period: 07/23/2013 10:40 Through 07/23/2013 10:46
Time Online Criteria: 1 minute(s)

Source	S20					
Parameter)Unit(	S20CPFLO (SCFH)	S20FFACT (MMBTU/CF)	S20PFLOW (KSCFM)	S20PVAC (PSIA)	S20STEAM (KLBS/HR)	S20STEMP (DEGFAHRE)
07/23/13 10:40	4,981,487.0	1,877.0	83.0	4.508	188	241.4
07/23/13 10:41	4,839,201.0	1,877.0	80.7	4.510	188	241.6
07/23/13 10:42	5,198,134.0	1,877.0	86.6	4.514	188	240.4
07/23/13 10:43	4,825,183.0	1,877.0	80.4	4.512	191	238.4
07/23/13 10:44	4,676,274.0	1,877.0	77.9	4.511	192	240.0
07/23/13 10:45	4,828,567.0	1,877.0	80.5	4.512	192	240.4
07/23/13 10:46	4,872,001.0	1,877.0	81.2	4.511	191	240.4
Average	4,888,692.4	1,877.0	81.5	4.511	190	240.4
Minimum	4,676,274.0	1,877.0	77.9	4.508	188	238.4
Maximum	5,198,134.0	1,877.0	86.6	4.514	192	241.6
Summation	34,220,847.0	13,139.0	570.3	31.578	1,330	1,682.6
Included Data Points	7	7	7	7	7	7
Total number of Data Points	7	7	7	7	7	7

11

MPU03406

F = Unit Offline E = Exceedance C = Calibration S = Substituted I = Invalid
M = Maintenance T = Out Of Control * = Suspect U = Startup D = Shutdown

520 High flow RATA
Run #2

Average Data

Plant: Manitowoc Public Utilities
Interval: 1 Minute
Type: Roll
Report Period: 07/23/2013 10:47 Through 07/23/2013 10:53
Time Online Criteria: 1 minute(s)

Source	S20					
Parameter)Unit(	S20CPFLO (SCFH)	S20FFACT (MMBTU/CF)	S20PFLOW (KSCFM)	S20PVAC (PSIA)	S20STEAM (KLBS/HR)	S20STEMP (DEGFAHRE)
07/23/13 10:47	4,883,221.0	1,877.0	81.4	4.510	189	240.3
07/23/13 10:48	4,975,918.0	1,877.0	82.9	4.510	190	240.4
07/23/13 10:49	5,016,016.0	1,877.0	83.6	4.511	193	240.3
07/23/13 10:50	5,008,816.0	1,877.0	83.5	4.512	193	239.3
07/23/13 10:51	5,013,130.0	1,877.0	83.6	4.512	192	239.9
07/23/13 10:52	4,984,540.0	1,877.0	83.1	4.511	190	240.2
07/23/13 10:53	4,927,943.0	1,877.0	82.1	4.511	189	240.4
Average	4,972,797.7	1,877.0	82.9	4.511	191	240.1
Minimum	4,883,221.0	1,877.0	81.4	4.510	189	239.3
Maximum	5,016,016.0	1,877.0	83.6	4.512	193	240.4
Summation	34,809,584.0	13,139.0	580.2	31.577	1,336	1,680.8
Included Data Points	7	7	7	7	7	7
Total number of Data Points	7	7	7	7	7	7

12

MPU03407

F = Unit Offline E = Exceedance C = Calibration S = Substituted I = Invalid
M = Maintenance T = Out Of Control * = Suspect U = Startup D = Shutdown

S20 High Flow RATA
Run # 3

Average Data

Plant: Manitowoc Public Utilities
Interval: 1 Minute
Type: Roll
Report Period: 07/23/2013 10:54 Through 07/23/2013 11:00
Time Online Criteria: 1 minute(s)

Source	S20					
Parameter)Unit(	S20CPFLO (SCFH)	S20FFACT (MMBTU/CF)	S20PFLOW (KSCFM)	S20PVAC (PSIA)	S20STEAM (KLBS/HR)	S20STEMP (DEGFAHRE)
07/23/13 10:54	4,896,127.0	1,877.0	81.6	4.512	189	240.2
07/23/13 10:55	4,766,518.0	1,877.0	79.4	4.512	189	239.8
07/23/13 10:56	4,859,782.0	1,877.0	81.0	4.512	191	239.8
07/23/13 10:57	5,045,891.0	1,877.0	84.1	4.512	193	239.8
07/23/13 10:58	4,963,766.0	1,877.0	82.7	4.512	193	239.9
07/23/13 10:59	4,964,911.0	1,877.0	82.7	4.511	192	239.9
07/23/13 11:00	4,914,271.0	1,877.0	81.9	4.512	189	239.9
Average	4,915,895.1	1,877.0	81.9	4.512	191	239.9
Minimum	4,766,518.0	1,877.0	79.4	4.511	189	239.8
Maximum	5,045,891.0	1,877.0	84.1	4.512	193	240.2
Summation	34,411,266.0	13,139.0	573.4	31.583	1,336	1,679.3
Included Data Points	7	7	7	7	7	7
Total number of Data Points	7	7	7	7	7	7

13

MPU03408

F = Unit Offline E = Exceedance C = Calibration S = Substituted I = Invalid
M = Maintenance T = Out Of Control * = Suspect U = Startup D = Shutdown

S20 High Flow
Run 4
Run 4

Average Data

Plant: Manitowoc Public Utilities
Interval: 1 Minute
Type: Roll
Report Period: 07/23/2013 11:30 Through 07/23/2013 11:36
Time Online Criteria: 1 minute(s)

Source	S20					
Parameter)Unit(	S20CPFLO (SCFH)	S20FFACT (MMBTU/CF)	S20PFLOW (KSCFM)	S20PVAC (PSIA)	S20STEAM (KLBS/HR)	S20STEMP (DEGFAHRE)
07/23/13 11:30	4,915,014.0	1,877.0	81.9	4.514	192	239.1
07/23/13 11:31	4,879,518.0	1,877.0	81.3	4.516	193	239.1
07/23/13 11:32	4,922,274.0	1,877.0	82.0	4.517	193	239.0
07/23/13 11:33	4,949,981.0	1,877.0	82.5	4.516	193	239.0
07/23/13 11:34	4,905,643.0	1,877.0	81.8	4.516	193	236.2
07/23/13 11:35	4,962,125.2	1,877.0	82.7	4.516	193	236.4
07/23/13 11:36	4,967,688.0	1,877.0	82.8	4.516	193	236.3
Average	4,928,891.9	1,877.0	82.1	4.516	193	237.9
Minimum	4,879,518.0	1,877.0	81.3	4.514	192	236.2
Maximum	4,967,688.0	1,877.0	82.8	4.517	193	239.1
Summation	34,502,243.2	13,139.0	575.0	31.611	1,350	1,665.1
Included Data Points	7	7	7	7	7	7
Total number of Data Points	7	7	7	7	7	7

14

F = Unit Offline E = Exceedance C = Calibration S = Substituted I = Invalid
M = Maintenance T = Out Of Control * = Suspect U = Startup D = Shutdown

MPU03409

S20 High Flow Run #5

Average Data

Plant: Manitowoc Public Utilities
Interval: 1 Minute
Type: Roll
Report Period: 07/23/2013 11:37 Through 07/23/2013 11:43
Time Online Criteria: 1 minute(s)

Source	S20					
Parameter)Unit(	S20CPFLO (SCFH)	S20FFACT (MMBTU/CF)	S20PFLOW (KSCFM)	S20PVAC (PSIA)	S20STEAM (KLBS/HR)	S20STEMP (DEGFAHRE)
07/23/13 11:37	4,966,613.0	1,877.0	82.8	4.517	193	236.6
07/23/13 11:38	4,978,343.0	1,877.0	83.0	4.517	193	236.7
07/23/13 11:39	5,031,388.0	1,877.0	83.9	4.518	193	237.0
07/23/13 11:40	5,007,867.0	1,877.0	83.5	4.518	193	237.2
07/23/13 11:41	4,934,347.0	1,877.0	82.2	4.517	191	236.9
07/23/13 11:42	4,876,063.0	1,877.0	81.3	4.516	190	236.7
07/23/13 11:43	4,854,882.0	1,877.0	80.9	4.516	190	236.9
Average	4,949,929.0	1,877.0	82.5	4.517	192	236.9
Minimum	4,854,882.0	1,877.0	80.9	4.516	190	236.6
Maximum	5,031,388.0	1,877.0	83.9	4.518	193	237.2
Summation	34,649,503.0	13,139.0	577.6	31.619	1,343	1,658.0
Included Data Points	7	7	7	7	7	7
Total number of Data Points	7	7	7	7	7	7

15

MPU03410

F = Unit Offline E = Exceedance C = Calibration S = Substituted I = Invalid
M = Maintenance T = Out Of Control * = Suspect U = Startup D = Shutdown

S20 High Flow
RATA
Run #6

Average Data

Plant: Manitowoc Public Utilities
Interval: 1 Minute
Type: Roll
Report Period: 07/23/2013 11:44 Through 07/23/2013 11:50
Time Online Criteria: 1 minute(s)

Source	S20					
Parameter)Unit(	S20CPFLO (SCFH)	S20FFACT (MMBTU/CF)	S20PFLOW (KSCFM)	S20PVAC (PSIA)	S20STEAM (KLBS/HR)	S20STEMP (DEGFAHRE)
07/23/13 11:44	4,922,460.0	1,877.0	82.0	4.514	190	237.1
07/23/13 11:45	4,962,591.0	1,877.0	82.7	4.516	190	237.2
07/23/13 11:46	4,957,599.0	1,877.0	82.6	4.514	191	237.3
07/23/13 11:47	4,957,778.0	1,877.0	82.6	4.513	190	237.3
07/23/13 11:48	4,963,160.0	1,877.0	82.7	4.513	192	237.2
07/23/13 11:49	4,961,867.0	1,877.0	82.7	4.512	193	236.8
07/23/13 11:50	4,941,495.0	1,877.0	82.4	4.512	193	236.7
Average	4,952,421.4	1,877.0	82.5	4.513	191	237.1
Minimum	4,922,460.0	1,877.0	82.0	4.512	190	236.7
Maximum	4,963,160.0	1,877.0	82.7	4.516	193	237.3
Summation	34,666,950.0	13,139.0	577.7	31.594	1,339	1,659.6
Included Data Points	7	7	7	7	7	7
Total number of Data Points	7	7	7	7	7	7

MPU03411

F = Unit Offline E = Exceedance C = Calibration S = Substituted I = Invalid
M = Maintenance T = Out Of Control * = Suspect U = Startup D = Shutdown

S20 High Flow
Run #7

Average Data

Plant: Manitowoc Public Utilities
Interval: 1 Minute
Type: Roll
Report Period: 07/23/2013 11:51 Through 07/23/2013 11:57
Time Online Criteria: 1 minute(s)

Source	S20					
Parameter)Unit(	S20CPFLO (SCFH)	S20FFACT (MMBTU/CF)	S20PFLOW (KSCFM)	S20PVAC (PSIA)	S20STEAM (KLBS/HR)	S20STEMP (DEGFAHRE)
07/23/13 11:51	4,976,607.0	1,877.0	82.9	4.511	193	237.0
07/23/13 11:52	4,969,779.0	1,877.0	82.6	4.511	190	237.3
07/23/13 11:53	4,976,104.0	1,877.0	82.9	4.514	186	237.4
07/23/13 11:54	5,007,856.0	1,877.0	83.5	4.515	187	237.6
07/23/13 11:55	4,868,911.0	1,877.0	81.1	4.514	192	237.7
07/23/13 11:56	4,831,348.0	1,877.0	80.5	4.514	191	237.7
07/23/13 11:57	4,914,628.0	1,877.0	81.9	4.515	188	237.3
Average	4,935,033.3	1,877.0	82.2	4.513	190	237.4
Minimum	4,831,348.0	1,877.0	80.5	4.511	186	237.0
Maximum	5,007,856.0	1,877.0	83.5	4.515	193	237.7
Summation	34,545,233.0	13,139.0	575.6	31.594	1,327	1,662.0
Included Data Points	7	7	7	7	7	7
Total number of Data Points	7	7	7	7	7	7

17

F = Unit Offline E = Exceedance C = Calibration S = Substituted I = Invalid
M = Maintenance T = Out Of Control * = Suspect U = Startup D = Shutdown

MPU03412

S20 High Flow
RATA
Run #8

Average Data

Plant: Manitowoc Public Utilities
Interval: 1 Minute
Type: Roll
Report Period: 07/23/2013 11:58 Through 07/23/2013 12:04
Time Online Criteria: 1 minute(s)

Source	S20					
Parameter)Unit(	S20CPFLO (SCFH)	S20FFACT (MMBTU/CF)	S20PFLOW (KSCFM)	S20PVAC (PSIA)	S20STEAM (KLBS/HR)	S20STEMP (DEGFAHRE)
07/23/13 11:58	4,990,395.0	1,877.0	83.2	4.513	188	237.1
07/23/13 11:59	5,007,196.0	1,877.0	83.5	4.513	188	237.3
07/23/13 12:00	4,999,341.0	1,877.0	83.3	4.515	192	237.5
07/23/13 12:01	5,009,274.0	1,877.0	83.5	4.518	193	237.4
07/23/13 12:02	4,955,098.0	1,877.0	82.6	4.518	192	237.1
07/23/13 12:03	5,143,585.0	1,877.0	85.7	4.518	190	238.3
07/23/13 12:04	5,002,398.0	1,877.0	83.4	4.518	190	239.6
Average	5,015,326.7	1,877.0	83.6	4.516	190	237.8
Minimum	4,955,098.0	1,877.0	82.6	4.513	188	237.1
Maximum	5,143,585.0	1,877.0	85.7	4.518	193	239.6
Summation	35,107,287.0	13,139.0	585.2	31.613	1,333	1,664.3
Included Data Points	7	7	7	7	7	7
Total number of Data Points	7	7	7	7	7	7

18

MPU03413

F = Unit Offline E = Exceedance C = Calibration S = Substituted I = Invalid
M = Maintenance T = Out Of Control * = Suspect U = Startup D = Shutdown

STACK S20 High
FLOW RATE
RUN #9

Average Data

Plant: Manitowoc Public Utilities
Interval: 1 Minute
Type: Roll
Report Period: 07/23/2013 12:05 Through 07/23/2013 12:11
Time Online Criteria: 1 minute(s)

Source	S20					
Parameter)Unit(	S20CPFLO (SCFH)	S20FFACT (MMBTU/CF)	S20PFLOW (KSCFM)	S20PVAC (PSIA)	S20STEAM (KLBS/HR)	S20STEMP (DEGFAHRE)
07/23/13 12:05	4,860,606.0	1,877.0	81.0	4.518	190	239.8
07/23/13 12:06	4,864,866.0	1,877.0	81.1	4.519	190	239.4
07/23/13 12:07	4,920,948.0	1,877.0	82.0	4.519	191	238.4
07/23/13 12:08	4,996,024.0	1,877.0	83.3	4.517	193	238.0
07/23/13 12:09	4,995,476.0	1,877.0	83.3	4.517	194	239.1
07/23/13 12:10	4,963,266.0	1,877.0	82.7	4.517	194	240.0
07/23/13 12:11	4,966,353.0	1,877.0	82.8	4.516	191	240.1
Average	4,938,219.9	1,877.0	82.3	4.518	192	239.3
Minimum	4,860,606.0	1,877.0	81.0	4.516	190	238.0
Maximum	4,996,024.0	1,877.0	83.3	4.519	194	240.1
Summation	34,567,539.0	13,139.0	576.2	31.623	1,343	1,674.8
Included Data Points	7	7	7	7	7	7
Total number of Data Points	7	7	7	7	7	7

19

F = Unit Offline E = Exceedance C = Calibration S = Substituted I = Invalid
M = Maintenance T = Out Of Control * = Suspect U = Startup D = Shutdown

MPU03414

STACK S20 High
Flow Rate
Run #10

Average Data

Plant: Manitowoc Public Utilities
Interval: 1 Minute
Type: Roll
Report Period: 07/23/2013 12:12 Through 07/23/2013 12:18
Time Online Criteria: 1 minute(s)

Source	S20					
Parameter)Unit(	S20CPFLO (SCFH)	S20FFACT (MMBTU/CF)	S20PFLOW (KSCFM)	S20PVAC (PSIA)	S20STEAM (KLBS/HR)	S20STEMP (DEGFAHRE)
07/23/13 12:12	4,975,304.0	1,877.0	82.9	4.515	190	240.3
07/23/13 12:13	4,929,126.0	1,877.0	82.2	4.514	190	240.6
07/23/13 12:14	4,870,029.0	1,877.0	81.2	4.513	190	240.9
07/23/13 12:15	5,192,558.0	1,877.0	86.5	4.514	190	239.4
07/23/13 12:16	5,170,573.0	1,877.0	86.2	4.517	190	239.3
07/23/13 12:17	5,140,660.0	1,877.0	85.7	4.517	191	240.4
07/23/13 12:18	4,988,190.0	1,877.0	83.1	4.516	194	240.9
Average	5,038,062.9	1,877.0	84.0	4.515	191	240.3
Minimum	4,870,029.0	1,877.0	81.2	4.513	190	239.3
Maximum	5,192,558.0	1,877.0	86.5	4.517	194	240.9
Summation	35,266,440.0	13,139.0	587.8	31.606	1,335	1,681.8
Included Data Points	7	7	7	7	7	7
Total number of Data Points	7	7	7	7	7	7

20

MPU03415

F = Unit Offline E = Exceedance C = Calibration S = Substituted I = Invalid
M = Maintenance T = Out Of Control * = Suspect U = Startup D = Shutdown

520 low flow RATA
Run #1

Average Data

Plant: Manitowoc Public Utilities
Interval: 1 Minute
Type: Roll
Report Period: 07/23/2013 05:15 Through 07/23/2013 05:25
Time Online Criteria: 1 minute(s)

Source	S20					
Parameter)Unit(	S20CPFLO (SCFH)	S20FFACT (MMBTU/CF)	S20PFLOW (KSCFM)	S20PVAC (PSIA)	S20STEAM (KLBS/HR)	S20STEMP (DEGFAHRE)
07/23/13 05:15	3,567,357.0	1,805.0	59.5	4.478	81	212.9
07/23/13 05:16	3,658,121.0	1,805.0	61.0	4.477	87	212.5
07/23/13 05:17	3,535,780.0	1,805.0	58.9	4.476	80	212.4
07/23/13 05:18	3,205,500.0	1,805.0	53.4	4.476	80	210.8
07/23/13 05:19	3,682,354.0	1,805.0	61.4	4.476	81	210.9
07/23/13 05:20	3,534,185.0	1,805.0	58.9	4.476	85	213.0
07/23/13 05:21	3,591,395.0	1,805.0	59.9	4.477	82	212.9
07/23/13 05:22	3,588,990.0	1,805.0	59.8	4.479	78	213.2
07/23/13 05:23	3,620,309.0	1,805.0	60.3	4.479	83	213.2
07/23/13 05:24	3,629,153.0	1,805.0	60.5	4.479	84	212.8
07/23/13 05:25	3,542,893.0	1,805.0	59.0	4.478	79	212.5
Average	3,559,639.7	1,805.0	59.3	4.477	82	212.5
Minimum	3,205,500.0	1,805.0	53.4	4.476	78	210.8
Maximum	3,682,354.0	1,805.0	61.4	4.479	87	213.2
Summation	39,156,037.0	19,855.0	652.6	49.251	900	2,337.1
Included Data Points	11	11	11	11	11	11
Total number of Data Points	11	11	11	11	11	11

21

F = Unit Offline E = Exceedance C = Calibration S = Substituted I = Invalid
M = Maintenance T = Out Of Control * = Suspect U = Startup D = Shutdown

MPU03416

S20 low flow RATA
Run #2

Average Data

Plant: Manitowoc Public Utilities
Interval: 1 Minute
Type: Roll
Report Period: 07/23/2013 06:20 Through 07/23/2013 06:30
Time Online Criteria: 1 minute(s)

Source	S20					
Parameter)Unit(	S20CPFLO (SCFH)	S20FFACT (MMBTU/CF)	S20PFLOW (KSCFM)	S20PVAC (PSIA)	S20STEAM (KLBS/HR)	S20STEMP (DEGFAHRE)
07/23/13 06:20	3,427,450.0	1,877.0	57.1	4.479	80	213.4
07/23/13 06:21	3,499,572.0	1,877.0	58.3	4.481	78	213.5
07/23/13 06:22	3,527,678.0	1,877.0	58.8	4.480	84	213.4
07/23/13 06:23	3,599,930.0	1,877.0	60.0	4.480	78	213.6
07/23/13 06:24	3,623,501.0	1,877.0	60.4	4.479	77	213.8
07/23/13 06:25	3,494,626.0	1,877.0	58.2	4.479	85	213.9
07/23/13 06:26	3,817,565.0	1,877.0	63.6	4.479	78	212.7
07/23/13 06:27	3,632,565.0	1,877.0	60.5	4.479	80	213.2
07/23/13 06:28	3,569,742.0	1,877.0	59.5	4.478	83	214.0
07/23/13 06:29	3,584,589.0	1,877.0	59.7	4.477	76	213.7
07/23/13 06:30	3,600,408.0	1,877.0	60.0	4.476	86	214.0
Average	3,579,784.2	1,877.0	59.6	4.479	80	213.6
Minimum	3,427,450.0	1,877.0	57.1	4.476	76	212.7
Maximum	3,817,565.0	1,877.0	63.6	4.481	86	214.0
Summation	39,377,626.0	20,647.0	656.1	49.267	885	2,349.2
Included Data Points	11	11	11	11	11	11
Total number of Data Points	11	11	11	11	11	11

22

F = Unit Offline E = Exceedance C = Calibration S = Substituted I = Invalid
M = Maintenance T = Out Of Control * = Suspect U = Startup D = Shutdown

MPU03417

S20 low flow RATA
Run #3

Average Data

Plant: Manitowoc Public Utilities
Interval: 1 Minute
Type: Roll
Report Period: 07/23/2013 06:31 Through 07/23/2013 06:38
Time Online Criteria: 1 minute(s)

Source	S20					
Parameter)Unit(	S20CPFLO (SCFH)	S20FFACT (MMBTU/CF)	S20PFLOW (KSCFM)	S20PVAC (PSIA)	S20STEAM (KLBS/HR)	S20STEMP (DEGFAHRE)
07/23/13 06:31	3,326,333.0	1,877.0	55.4	4.476	76	213.1
07/23/13 06:32	3,376,033.0	1,877.0	56.3	4.475	82	211.9
07/23/13 06:33	3,477,580.0	1,877.0	58.0	4.474	80	213.5
07/23/13 06:34	3,509,985.0	1,877.0	58.5	4.474	77	213.9
07/23/13 06:35	3,547,831.5	1,877.0	59.1	4.478	85	214.1
07/23/13 06:36	3,596,106.0	1,877.0	59.9	4.478	78	213.9
07/23/13 06:37	3,580,338.0	1,877.0	59.7	4.478	78	213.7
07/23/13 06:38	3,549,560.0	1,877.0	59.2	4.478	84	213.8
Average	3,495,470.8	1,877.0	58.3	4.476	80	213.5
Minimum	3,326,333.0	1,877.0	55.4	4.474	76	211.9
Maximum	3,596,106.0	1,877.0	59.9	4.478	85	214.1
Summation	27,963,766.5	15,016.0	466.1	35.811	640	1,707.9
Included Data Points	8	8	8	8	8	8
Total number of Data Points	8	8	8	8	8	8

23

F = Unit Offline E = Exceedance C = Calibration S = Substituted I = Invalid
M = Maintenance T = Out Of Control * = Suspect U = Startup D = Shutdown

S20 low flow RATA
Run #4

Average Data

Plant: Manitowoc Public Utilities
Interval: 1 Minute
Type: Roll
Report Period: 07/23/2013 06:39 Through 07/23/2013 06:46
Time Online Criteria: 1 minute(s)

Source	S20					
Parameter)Unit(	S20CPFLO (SCFH)	S20FFACT (MMBTU/CF)	S20PFLOW (KSCFM)	S20PVAC (PSIA)	S20STEAM (KLBS/HR)	S20STEMP (DEGFAHRE)
07/23/13 06:39	3,517,348.0	1,877.0	58.6	4.477	75	214.1
07/23/13 06:40	3,496,368.0	1,877.0	58.3	4.477	85	214.4
07/23/13 06:41	3,523,691.0	1,877.0	58.7	4.477	78	214.6
07/23/13 06:42	3,676,140.0	1,877.0	61.3	4.476	79	214.6
07/23/13 06:43	4,065,787.0	1,877.0	67.8	4.476	86	212.7
07/23/13 06:44	3,663,305.0	1,877.0	61.1	4.476	77	214.2
07/23/13 06:45	3,582,551.0	1,877.0	59.7	4.476	81	213.7
07/23/13 06:46	3,598,766.0	1,877.0	60.0	4.475	84	213.8
Average	3,640,494.5	1,877.0	60.7	4.476	81	214.0
Minimum	3,496,368.0	1,877.0	58.3	4.475	75	212.7
Maximum	4,065,787.0	1,877.0	67.8	4.477	86	214.6
Summation	29,123,956.0	15,016.0	485.5	35.810	645	1,712.1
Included Data Points	8	8	8	8	8	8
Total number of Data Points	8	8	8	8	8	8

24

F = Unit Offline E = Exceedance C = Calibration S = Substituted I = Invalid
M = Maintenance T = Out Of Control * = Suspect U = Startup D = Shutdown

MPU03419

S20 low flow RATA
Run # 5

Average Data

Plant: Manitowoc Public Utilities
Interval: 1 Minute
Type: Roll
Report Period: 07/23/2013 07:02 Through 07/23/2013 07:10
Time Online Criteria: 1 minute(s)

Source	S20					
Parameter)Unit(	S20CPFLO (SCFH)	S20FFACT (MMBTU/CF)	S20PFLOW (KSCFM)	S20PVAC (PSIA)	S20STEAM (KLBS/HR)	S20STEMP (DEGFAHRE)
07/23/13 07:02	3,578,907.0	1,877.0	59.6	4.479	84	215.0
07/23/13 07:03	3,593,742.0	1,877.0	59.9	4.479	77	213.9
07/23/13 07:04	3,543,220.0	1,877.0	59.1	4.478	84	213.4
07/23/13 07:05	3,530,361.0	1,877.0	58.8	4.477	80	213.0
07/23/13 07:06	3,926,854.0	1,877.0	65.4	4.476	79	212.8
07/23/13 07:07	3,850,736.0	1,877.0	64.2	4.476	85	213.5
07/23/13 07:08	3,660,117.0	1,877.0	61.0	4.475	78	214.0
07/23/13 07:09	3,657,440.0	1,877.0	61.0	4.475	80	213.9
07/23/13 07:10	3,596,556.0	1,877.0	59.9	4.474	83	213.5
Average	3,659,770.3	1,877.0	61.0	4.477	81	213.7
Minimum	3,530,361.0	1,877.0	58.8	4.474	77	212.8
Maximum	3,926,854.0	1,877.0	65.4	4.479	85	215.0
Summation	32,937,933.0	16,893.0	548.9	40.289	730	1,923.0
Included Data Points	9	9	9	9	9	9
Total number of Data Points	9	9	9	9	9	9

25

MPU03420

F = Unit Offline E = Exceedance C = Calibration S = Substituted I = Invalid
M = Maintenance T = Out Of Control * = Suspect U = Startup D = Shutdown

S20 low flow RATA
Run #6

Average Data

Plant: Manitowoc Public Utilities
Interval: 1 Minute
Type: Roll
Report Period: 07/23/2013 07:11 Through 07/23/2013 07:16
Time Online Criteria: 1 minute(s)

Source	S20					
Parameter)Unit(	S20CPFLO (SCFH)	S20FFACT (MMBTU/CF)	S20PFLOW (KSCFM)	S20PVAC (PSIA)	S20STEAM (KLBS/HR)	S20STEMP (DEGFAHRE)
07/23/13 07:11	3,535,540.0	1,877.0	58.9	4.475	76	213.6
07/23/13 07:12	3,541,644.0	1,877.0	59.0	4.476	85	214.6
07/23/13 07:13	3,626,534.0	1,877.0	60.4	4.477	82	215.6
07/23/13 07:14	3,458,983.0	1,877.0	57.6	4.476	78	215.3
07/23/13 07:15	3,436,757.0	1,877.0	57.3	4.477	84	214.4
07/23/13 07:16	3,609,686.0	1,877.0	60.2	4.476	81	216.2
Average	3,534,857.3	1,877.0	58.9	4.476	81	215.0
Minimum	3,436,757.0	1,877.0	57.3	4.475	76	213.6
Maximum	3,626,534.0	1,877.0	60.4	4.477	85	216.2
Summation	21,209,144.0	11,262.0	353.4	26.857	486	1,289.7
Included Data Points	6	6	6	6	6	6
Total number of Data Points	6	6	6	6	6	6

26

MPU03421

F = Unit Offline E = Exceedance C = Calibration S = Substituted I = Invalid
M = Maintenance T = Out Of Control * = Suspect U = Startup D = Shutdown

S20 low flow RATA
Run # 7

Average Data

Plant: Manitowoc Public Utilities
Interval: 1 Minute
Type: Roll
Report Period: 07/23/2013 07:17 Through 07/23/2013 07:24
Time Online Criteria: 1 minute(s)

Source	S20					
Parameter)Unit(	S20CPFLO (SCFH)	S20FFACT (MMBTU/CF)	S20PFLOW (KSCFM)	S20PVAC (PSIA)	S20STEAM (KLBS/HR)	S20STEMP (DEGFAHRE)
07/23/13 07:17	3,682,537.0	1,877.0	61.4	4.475	75	215.9
07/23/13 07:18	3,757,601.0	1,877.0	62.6	4.474	86	215.6
07/23/13 07:19	4,038,377.0	1,877.0	67.3	4.474	77	214.5
07/23/13 07:20	3,705,636.0	1,877.0	61.8	4.474	80	214.6
07/23/13 07:21	3,622,303.0	1,877.0	60.4	4.474	83	216.3
07/23/13 07:22	3,675,891.0	1,877.0	61.3	4.474	76	216.3
07/23/13 07:23	3,692,754.0	1,877.0	61.5	4.474	83	216.0
07/23/13 07:24	3,656,963.0	1,877.0	60.9	4.473	80	215.8
Average	3,729,007.8	1,877.0	62.1	4.474	80	215.6
Minimum	3,622,303.0	1,877.0	60.4	4.473	75	214.5
Maximum	4,038,377.0	1,877.0	67.3	4.475	86	216.3
Summation	29,832,062.0	15,016.0	497.2	35.792	640	1,725.0
Included Data Points	8	8	8	8	8	8
Total number of Data Points	8	8	8	8	8	8

27

F = Unit Offline E = Exceedance C = Calibration S = Substituted I = Invalid
M = Maintenance T = Out Of Control * = Suspect U = Startup D = Shutdown

MPU03422

S20 low flow RATA
Run # 8

Average Data

Plant: Manitowoc Public Utilities
Interval: 1 Minute
Type: Roll
Report Period: 07/23/2013 07:42 Through 07/23/2013 07:49
Time Online Criteria: 1 minute(s)

Source	S20					
Parameter)Unit(	S20CPFLO (SCFH)	S20FFACT (MMBTU/CF)	S20PFLOW (KSCFM)	S20PVAC (PSIA)	S20STEAM (KLBS/HR)	S20STEMP (DEGFAHRE)
07/23/13 07:42	3,616,118.0	1,877.0	60.3	4.479	84	215.9
07/23/13 07:43	3,562,281.0	1,877.0	59.4	4.481	81	215.4
07/23/13 07:44	3,631,463.0	1,877.0	60.5	4.480	78	215.8
07/23/13 07:45	3,673,711.0	1,877.0	61.2	4.480	82	216.6
07/23/13 07:46	3,663,955.0	1,877.0	61.1	4.480	85	215.7
07/23/13 07:47	3,754,963.0	1,877.0	62.6	4.480	76	214.0
07/23/13 07:48	3,841,202.0	1,877.0	64.0	4.479	85	215.5
07/23/13 07:49	3,677,906.0	1,877.0	61.3	4.478	80	216.3
Average	3,677,699.9	1,877.0	61.3	4.480	81	215.7
Minimum	3,562,281.0	1,877.0	59.4	4.478	76	214.0
Maximum	3,841,202.0	1,877.0	64.0	4.481	85	216.6
Summation	29,421,599.0	15,016.0	490.4	35.837	651	1,725.2
Included Data Points	8	8	8	8	8	8
Total number of Data Points	8	8	8	8	8	8

28

F = Unit Offline E = Exceedance C = Calibration S = Substituted I = Invalid
M = Maintenance T = Out Of Control * = Suspect U = Startup D = Shutdown

MPU03423

S20 low flow RATA
Run #9

Average Data

Plant: Manitowoc Public Utilities
Interval: 1 Minute
Type: Roll
Report Period: 07/23/2013 07:50 Through 07/23/2013 07:57
Time Online Criteria: 1 minute(s)

Source	S20					
Parameter)Unit(	S20CPFLO (SCFH)	S20FFACT (MMBTU/CF)	S20PFLOW (KSCFM)	S20PVAC (PSIA)	S20STEAM (KLBS/HR)	S20STEMP (DEGFAHRE)
07/23/13 07:50	3,606,383.0	1,877.0	60.1	4.479	78	216.4
07/23/13 07:51	3,584,958.0	1,877.0	59.7	4.478	86	216.1
07/23/13 07:52	3,152,380.0	1,877.0	52.5	4.478	79	214.5
07/23/13 07:53	3,595,443.0	1,877.0	59.9	4.481	79	214.2
07/23/13 07:54	3,771,717.0	1,877.0	62.9	4.482	86	215.1
07/23/13 07:55	3,761,010.0	1,877.0	62.7	4.482	78	216.4
07/23/13 07:56	3,746,944.0	1,877.0	62.4	4.482	79	216.4
07/23/13 07:57	3,446,218.0	1,877.0	57.4	4.482	85	216.0
Average	3,583,131.6	1,877.0	59.7	4.481	81	215.6
Minimum	3,152,380.0	1,877.0	52.5	4.478	78	214.2
Maximum	3,771,717.0	1,877.0	62.9	4.482	86	216.4
Summation	28,665,053.0	15,016.0	477.6	35.844	650	1,725.1
Included Data Points	8	8	8	8	8	8
Total number of Data Points	8	8	8	8	8	8

29

F = Unit Offline E = Exceedance C = Calibration S = Substituted I = Invalid
M = Maintenance T = Out Of Control * = Suspect U = Startup D = Shutdown

MPU03424

S20 low flow RATA
RUN # 10

Average Data

Plant: Manitowoc Public Utilities
Interval: 1 Minute
Type: Roll
Report Period: 07/23/2013 07:58 Through 07/23/2013 08:06
Time Online Criteria: 1 minute(s)

Source	S20					
Parameter)Unit(	S20CPFLO (SCFH)	S20FFACT (MMBTU/CF)	S20PFLOW (KSCFM)	S20PVAC (PSIA)	S20STEAM (KLBS/HR)	S20STEMP (DEGFAHRE)
07/23/13 07:58	3,524,282.0	1,877.0	58.7	4.481	78	216.2
07/23/13 07:59	3,602,260.0	1,877.0	60.0	4.481	82	216.2
07/23/13 08:00	3,680,786.0	1,877.0	61.3	4.481	80	216.2
07/23/13 08:01	3,756,847.0	1,877.0	62.6	4.483	79	216.5
07/23/13 08:02	3,732,757.0	1,877.0	62.2	4.483	85	216.1
07/23/13 08:03	3,699,318.0	1,877.0	61.7	4.484	79	214.9
07/23/13 08:04	3,783,668.0	1,877.0	63.1	4.485	81	214.4
07/23/13 08:05	3,817,910.0	1,877.0	63.6	4.485	84	215.1
07/23/13 08:06	3,700,794.0	1,877.0	61.7	4.485	76	216.5
Average	3,699,846.9	1,877.0	61.7	4.483	80	215.8
Minimum	3,524,282.0	1,877.0	58.7	4.481	76	214.4
Maximum	3,817,910.0	1,877.0	63.6	4.485	85	216.5
Summation	33,298,622.0	16,893.0	554.9	40.348	724	1,942.1
Included Data Points	9	9	9	9	9	9
Total number of Data Points	9	9	9	9	9	9

30

F = Unit Offline E = Exceedance C = Calibration S = Substituted I = Invalid
M = Maintenance T = Out Of Control * = Suspect U = Startup D = Shutdown

MPU03425

RATA Test - Part 75

Plant: MPU Source: S20

Parameter:	S20CPFLO	Unit of Measure:	SCFH
Effective Date/Time:	07/23/2013 13:18	Test Number:	XML (X03-Q3-2013-001) / EDR (1)
Monitoring System ID:	X03	Frequency:	4QTRS
Test Reason:	QA-Periodic Quality Assurance	Test Result:	**Passed**
Overall RA:	4.28	Overall BAF:	1.000
CEMS Time Offset :			
Test Comment:			

Operating Level:	Low	Level BAF:	1.000	APS Indicator:	False	Report in EDR:	Y
Mean CEMS:	3,629,444.444	Relative Accuracy:	3.12	tValue:	2.306	Use BAF:	Y
Mean Reference:	3,663,444.444	Standard Deviation:	104,267.684	Avg Load:	81	Reference Method:	2
Mean Difference:	34,000.000	Confidence Coefficient:	80,147.093				
Flow/Load Ratio:	0.45	CO/O2 RM Used:		Stack Dia:		Default WAF:	
Heat/Load Ratio:	9673	Reference Heat:		Stack Area:		Calculated WAF:	

Run	Started	Ended	Reference Value	CEMS Value	Difference	Load	Use
1	07/23/2013 05:15	07/23/2013 05:25	3,743,000.0	3,560,000.0	183,000.0	82	Y
2	07/23/2013 06:20	07/23/2013 06:30	3,720,000.0	3,580,000.0	140,000.0	80	Y
3	07/23/2013 06:31	07/23/2013 06:38	3,723,000.0	3,495,000.0	228,000.0	80	
4	07/23/2013 06:39	07/23/2013 06:46	3,537,000.0	3,640,000.0	-103,000.0	81	Y
5	07/23/2013 07:02	07/23/2013 07:10	3,711,000.0	3,660,000.0	51,000.0	81	Y
6	07/23/2013 07:11	07/23/2013 07:16	3,679,000.0	3,535,000.0	144,000.0	81	Y
7	07/23/2013 07:17	07/23/2013 07:24	3,706,000.0	3,729,000.0	-23,000.0	80	Y
8	07/23/2013 07:42	07/23/2013 07:49	3,600,000.0	3,678,000.0	-78,000.0	81	Y
9	07/23/2013 07:50	07/23/2013 07:57	3,622,000.0	3,583,000.0	39,000.0	81	Y
10	07/23/2013 07:58	07/23/2013 08:06	3,653,000.0	3,700,000.0	-47,000.0	80	Y

Operating Level: High	Level BAF: 1.000	APS Indicator: False	Report in EDR: Y
Mean CEMS: 4,953,666.667	Relative Accuracy: 4.28	tValue: 2.306	Use BAF: Y
Mean Reference: 4,786,666.667	Standard Deviation: 49,234.135	Avg Load: 191	Reference Method: 2
Mean Difference: -167,000.000	Confidence Coefficient: 37,844.638		
Flow/Load Ratio: 0.25	CO/O2 RM Used:	Stack Dia:	Default WAF:
Heat/Load Ratio: 8291	Reference Heat:	Stack Area:	Calculated WAF:

Run	Started	Ended	Reference Value	CEMS Value	Difference	Load	Use
1	07/23/2013 10:40	07/23/2013 10:46	4,724,000.0	4,889,000.0	-165,000.0	190	Y
2	07/23/2013 10:47	07/23/2013 10:53	4,760,000.0	4,973,000.0	-213,000.0	191	Y
3	07/23/2013 10:54	07/23/2013 11:00	4,775,000.0	4,916,000.0	-141,000.0	191	Y
4	07/23/2013 11:30	07/23/2013 11:36	4,714,000.0	4,929,000.0	-215,000.0	193	Y
5	07/23/2013 11:37	07/23/2013 11:43	4,819,000.0	4,950,000.0	-131,000.0	192	Y
6	07/23/2013 11:44	07/23/2013 11:50	4,696,000.0	4,952,000.0	-256,000.0	191	
7	07/23/2013 11:51	07/23/2013 11:57	4,815,000.0	4,935,000.0	-120,000.0	190	Y
8	07/23/2013 11:58	07/23/2013 12:04	4,857,000.0	5,015,000.0	-158,000.0	190	Y
9	07/23/2013 12:05	07/23/2013 12:11	4,830,000.0	4,938,000.0	-108,000.0	192	Y
10	07/23/2013 12:12	07/23/2013 12:18	4,786,000.0	5,038,000.0	-252,000.0	191	Y

Protocol Gas Details:

Gas Level Code	Gas Type Code	Vendor Identifier	Cylinder Indentifier	Expiration Date

Air Emissions Testing Data

QI Name:	**AETB Name:**
Exam Date:	**AETB Phone Number:**
Provider Name:	**AETB Email:**
Provider Email:	

RATA Test - Part 75

Plant: MPU Source: S20

Parameter:	S20CPCO2	Unit of Measure:	PERCENT
Effective Date/Time:	07/23/2013 20:40	Test Number:	XML (X09-Q3-2013-001) / EDR (1)
Monitoring System ID:	X09	Frequency:	4QTRS
Test Reason:	QA-Periodic Quality Assurance	Test Result:	**Passed**
Overall RA:	1.73	Overall BAF:	1.000
CEMS Time Offset :			
Test Comment:			

Operating Level:	Low	Level BAF:	1.000	APS Indicator:	False	Report in EDR:	Y
Mean CEMS:	5.111	Relative Accuracy:	1.73	tValue:	2.306	Use BAF:	Y
Mean Reference:	5.078	Standard Deviation:	0.071	Avg Load:	81	Reference Method:	3A
Mean Difference:	-0.033	Confidence Coefficient:	0.054				

Run	Started	Ended	Reference Value	CEMS Value	Difference	Load	Use
1	07/23/2013 14:50	07/23/2013 15:10	4.9	5.0	-0.1	81	Y
2	07/23/2013 15:20	07/23/2013 15:40	4.9	5.0	-0.1	80	Y
3	07/23/2013 15:50	07/23/2013 16:10	5.0	5.1	-0.1	81	Y
4	07/23/2013 16:20	07/23/2013 16:40	5.1	5.1	0.0	81	Y
5	07/23/2013 16:50	07/23/2013 17:10	5.0	5.1	-0.1	81	Y
6	07/23/2013 17:20	07/23/2013 17:40	5.2	5.1	0.1	81	Y
7	07/23/2013 17:50	07/23/2013 18:10	5.2	5.2	0.0	81	Y
8	07/23/2013 18:20	07/23/2013 18:40	5.1	5.2	-0.1	81	
9	07/23/2013 18:50	07/23/2013 19:10	5.2	5.2	0.0	81	Y

RATA Test - Part 75

Plant: MPU Source: S20

Parameter:	S20CPNOX	Unit of Measure:	PPM
Effective Date/Time:	07/23/2013 20:40	Test Number:	XML (X06-Q3-2013-001) / EDR (1)
Monitoring System ID:	X06	Frequency:	4QTRS
Test Reason:	QA-Periodic Quality Assurance	Test Result:	**Passed**
Overall RA:	3.08	Overall BAF:	1.000
CEMS Time Offset :			
Test Comment:			

Operating Level:	Low	Level BAF:	1.000	APS Indicator:	False	Report in EDR:	Y
Mean CEMS:	20.780	Relative Accuracy:	3.08	tValue:	2.262	Use BAF:	Y
Mean Reference:	20.240	Standard Deviation:	0.117	Avg Load:	81	Reference Method:	7E
Mean Difference:	-0.540	Confidence Coefficient:	0.084				

Run	Started	Ended	Reference Value	CEMS Value	Difference	Load	Use
1	07/23/2013 14:50	07/23/2013 15:10	21.7	22.0	-0.3	81	Y
2	07/23/2013 15:20	07/23/2013 15:40	21.2	21.7	-0.5	80	Y
3	07/23/2013 15:50	07/23/2013 16:10	20.2	20.7	-0.5	81	Y
4	07/23/2013 16:20	07/23/2013 16:40	19.9	20.5	-0.6	81	Y
5	07/23/2013 16:50	07/23/2013 17:10	19.6	20.3	-0.7	81	Y
6	07/23/2013 17:20	07/23/2013 17:40	19.6	20.3	-0.7	81	Y
7	07/23/2013 17:50	07/23/2013 18:10	19.6	20.2	-0.6	81	Y
8	07/23/2013 18:20	07/23/2013 18:40	19.9	20.4	-0.5	81	Y
9	07/23/2013 18:50	07/23/2013 19:10	20.3	20.8	-0.5	81	Y

RATA Test - Part 75

Plant: MPU Source: S20

Parameter:	S20NOX#M	Unit of Measure:	LB/MMBTU
Effective Date/Time:	07/23/2013 20:40	Test Number:	XML (X05-Q3-2013-001) / EDR (1)
Monitoring System ID:	X05	Frequency:	4QTRS
Test Reason:	QA-Periodic Quality Assurance	Test Result:	**Passed**
Overall RA:	2.61	Overall BAF:	1.000
CEMS Time Offset :			
Test Comment:			

Operating Level:	Low	Level BAF:	1.000	APS Indicator:	False	Report in EDR:	Y
Mean CEMS:	0.091	Relative Accuracy:	2.61	tValue:	2.306	Use BAF:	Y
Mean Reference:	0.090	Standard Deviation:	0.002	Avg Load:	81	Reference Method:	7E,3A
Mean Difference:	-0.001	Confidence Coefficient:	0.001				

Run	Started	Ended	Reference Value	CEMS Value	Difference	Load	Use
1	07/23/2013 14:50	07/23/2013 15:10	0.100	0.098	0.002	81	Y
2	07/23/2013 15:20	07/23/2013 15:40	0.098	0.097	0.001	80	Y
3	07/23/2013 15:50	07/23/2013 16:10	0.090	0.091	-0.001	81	Y
4	07/23/2013 16:20	07/23/2013 16:40	0.088	0.090	-0.002	81	Y
5	07/23/2013 16:50	07/23/2013 17:10	0.087	0.089	-0.002	81	Y
6	07/23/2013 17:20	07/23/2013 17:40	0.085	0.088	-0.003	81	
7	07/23/2013 17:50	07/23/2013 18:10	0.085	0.087	-0.002	81	Y
8	07/23/2013 18:20	07/23/2013 18:40	0.087	0.088	-0.001	81	Y
9	07/23/2013 18:50	07/23/2013 19:10	0.088	0.090	-0.002	81	Y

RATA Test - Permit

Plant: MPU Source: S20

Parameter: S20PCO
Effective Date/Time: 07/23/2013 20:40
Test Result: **Passed**
Overall RA: 2.23
CEMS Time Offset :
Test Comment:

Operating Level: Low
Mean CEMS: 36.878
Mean Reference: 37.033
Mean Difference: 0.156
Relative Accuracy: 2.23
Standard Deviation: 0.873
Confidence Coefficient: 0.671
APS Indicator: False
tValue: 2.306
Avg Load: 81

Run	Started	Ended	Reference Value	CEMS Value	Difference	Load	Use
1	07/23/2013 14:50	07/23/2013 15:10	38.7	39.1	-0.4	81	Y
2	07/23/2013 15:20	07/23/2013 15:40	38.0	36.9	1.1	80	Y
3	07/23/2013 15:50	07/23/2013 16:10	40.5	38.1	2.4	81	
4	07/23/2013 16:20	07/23/2013 16:40	37.8	35.9	1.9	81	Y
5	07/23/2013 16:50	07/23/2013 17:10	36.1	36.3	-0.2	81	Y
6	07/23/2013 17:20	07/23/2013 17:40	36.4	37.5	-1.1	81	Y
7	07/23/2013 17:50	07/23/2013 18:10	37.3	37.5	-0.2	81	Y
8	07/23/2013 18:20	07/23/2013 18:40	36.4	36.4	0.0	81	Y
9	07/23/2013 18:50	07/23/2013 19:10	35.8	35.7	0.1	81	Y
10	07/23/2013 19:20	07/23/2013 19:40	36.8	36.6	0.2	80	Y

Air Emissions Testing Data

QI Name:
Exam Date:
Provider Name:
Provider Email:
AETB Name:
AETB Phone Number:
AETB Email:

RATA Test - Permit

Plant: MPU Source: S20

Parameter: S20CO#M
Effective Date/Time: 07/23/2013 20:40
Test Result: **Passed**
Overall RA: 3.53
CEMS Time Offset :
Test Comment:

Operating Level: Low
Mean CEMS: 0.098
Mean Reference: 0.100
Mean Difference: 0.001
Relative Accuracy: 3.53
Standard Deviation: 0.003
Confidence Coefficient: 0.002
APS Indicator: False
tValue: 2.306
Avg Load: 81

Run	Started	Ended	Reference Value	CEMS Value	Difference	Load	Use
1	07/23/2013 14:50	07/23/2013 15:10	0.108	0.106	0.002	81	Y
2	07/23/2013 15:20	07/23/2013 15:40	0.107	0.101	0.006	80	Y
3	07/23/2013 15:50	07/23/2013 16:10	0.110	0.102	0.008	81	
4	07/23/2013 16:20	07/23/2013 16:40	0.101	0.096	0.005	81	Y
5	07/23/2013 16:50	07/23/2013 17:10	0.098	0.097	0.001	81	Y
6	07/23/2013 17:20	07/23/2013 17:40	0.096	0.100	-0.004	81	Y
7	07/23/2013 17:50	07/23/2013 18:10	0.098	0.099	-0.001	81	Y
8	07/23/2013 18:20	07/23/2013 18:40	0.097	0.096	0.001	81	Y
9	07/23/2013 18:50	07/23/2013 19:10	0.095	0.094	0.001	81	Y
10	07/23/2013 19:20	07/23/2013 19:40	0.097	0.097	0.000	80	Y

Air Emissions Testing Data

QI Name: ,
Exam Date:
Provider Name:
Provider Email:
AETB Name:
AETB Phone Number:
AETB Email:

RATA Test - Part 75

Plant: MPU Source: S20

Parameter:	S20CPSO2	Unit of Measure:	PPM
Effective Date/Time:	07/23/2013 20:40	Test Number:	XML (X01-Q3-2013-001) / EDR (1)
Monitoring System ID:	X01	Frequency:	4QTRS
Test Reason:	QA-Periodic Quality Assurance	Test Result:	**Passed**
Overall RA:	5.11	Overall BAF:	1.032
CEMS Time Offset :			
Test Comment:			

Operating Level:	Low	Level BAF:	1.032	APS Indicator:	False	Report in EDR:	Y
Mean CEMS:	40.767	Relative Accuracy:	5.11	tValue:	2.306	Use BAF:	Y
Mean Reference:	42.089	Standard Deviation:	1.077	Avg Load:	81	Reference Method:	6C
Mean Difference:	1.322	Confidence Coefficient:	0.828				

Run	Started	Ended	Reference Value	CEMS Value	Difference	Load	Use
1	07/23/2013 14:50	07/23/2013 15:10	43.7	42.2	1.5	81	Y
2	07/23/2013 15:20	07/23/2013 15:40	42.2	38.2	4.0	80	
3	07/23/2013 15:50	07/23/2013 16:10	44.1	41.1	3.0	81	Y
4	07/23/2013 16:20	07/23/2013 16:40	40.8	39.3	1.5	81	Y
5	07/23/2013 16:50	07/23/2013 17:10	40.2	40.2	0.0	81	Y
6	07/23/2013 17:20	07/23/2013 17:40	40.6	39.5	1.1	81	Y
7	07/23/2013 17:50	07/23/2013 18:10	42.4	39.9	2.5	81	Y
8	07/23/2013 18:20	07/23/2013 18:40	42.3	40.3	2.0	81	Y
9	07/23/2013 18:50	07/23/2013 19:10	42.3	42.2	0.1	81	Y

RATA Test - Permit

Plant: MPU Source: S20

Parameter: S20SO2#M
Effective Date/Time: 07/23/2013 20:40
Test Result: **Passed**
Overall RA: 6.39
CEMS Time Offset :
Test Comment:

Operating Level: Low
Mean CEMS: 0.248
Mean Reference: 0.258
Mean Difference: 0.010
Relative Accuracy: 6.39
Standard Deviation: 0.008
Confidence Coefficient: 0.006
APS Indicator: False
tValue: 2.306
Avg Load: 81

Run	Started	Ended	Reference Value	CEMS Value	Difference	Load	Use
1	07/23/2013 14:50	07/23/2013 15:10	0.280	0.262	0.018	81	Y
2	07/23/2013 15:20	07/23/2013 15:40	0.270	0.239	0.031	80	
3	07/23/2013 15:50	07/23/2013 16:10	0.274	0.252	0.022	81	Y
4	07/23/2013 16:20	07/23/2013 16:40	0.249	0.240	0.009	81	Y
5	07/23/2013 16:50	07/23/2013 17:10	0.249	0.246	0.003	81	Y
6	07/23/2013 17:20	07/23/2013 17:40	0.244	0.240	0.004	81	Y
7	07/23/2013 17:50	07/23/2013 18:10	0.256	0.239	0.017	81	Y
8	07/23/2013 18:20	07/23/2013 18:40	0.258	0.242	0.016	81	Y
9	07/23/2013 18:50	07/23/2013 19:10	0.256	0.253	0.003	81	Y
10	07/23/2013 19:20	07/23/2013 19:40	0.254	0.254	0.000	80	Y

Air Emissions Testing Data

QI Name: ,
Exam Date:
Provider Name:
Provider Email:
AETB Name:
AETB Phone Number:
AETB Email:

APPENDIX I

PROCEDURES

Please Note: In an effort to conserve paper, the procedure section of the appendix has been reserved for explanations of EPA methodology deviations. Please refer to the specific EPA Methods on the following EPA website: http://www.epa.gov/ttn/emc/

APPENDIX J

CALCULATION EQUATIONS

MSI/ Manitowoc PU
Test 1L Run 1
Sample Calculations

LB/mmBtu

Calculator			*Equations - CFR 40, Part 60,Method 19*
SO2 : Calculator			**SO2 : Equations**
	SO2 ppm,w =	43.7	*19-7* Using the wet SO2 and CO2 numbers.
	CO2 %,w =	4.9	Fc * 0.000000002595 * 64 *100 * SO2 ppm (wet) /CO2 % (wet)
	F-factor (Fc) =	1877	
	lb/million Btu =	0.278014192	
NOx : Calculator			**NOx : Equations**
	NOx ppm,w =	21.7	*19-7* Using wet NOx and CO2 numbers:
	CO2 %,w =	4.9	Fc * 0.000000002595 * 46 * 100 * NOx ppm (wet)/ CO2 % (wet)
	F-factor (Fc) =	1877	
	lb/million Btu =	0.09922546	

MPU03437

$$S_d = \left[\frac{\sum_{i=1}^{n} d_i^2 - \frac{\left[\sum_{i=1}^{n} d_i\right]^2}{n}}{n-1} \right]^{\frac{1}{2}} \qquad Eq.\ 2\text{-}4$$

12.4 Confidence Coefficient. Calculate the 2.5 percent error confidence coefficient (one-tailed), CC, as follows:

$$CC = t_{0.975} \frac{S_d}{\sqrt{n}} \qquad Eq.\ 2\text{-}5$$

Where:

$t_{0.975}$=t-value (see Table 2–1).

12.5 Relative Accuracy. Calculate the RA of a set of data as follows:

$$RA = \frac{\left[\left|\bar{d}\right| + \left|CC\right|\right]}{\overline{RM}} \times 100 \qquad Eq.\ 2\text{-}6$$

Where:

|d|=Absolute value of the mean differences (from Equation 2–3).

|CC|=Absolute value of the confidence coefficient (from Equation 2–3).

RM=Average RM value. In cases where the average emissions for the test are less than 50 percent of the applicable standard, substitute the emission standard value in the denominator of Eq. 2–6 in place ofRM. In all other cases, useRM.

13.0 Method Performance

13.1 Calibration Drift Performance Specification. The CEMS calibration must not drift or deviate from the reference value of the gas cylinder, gas cell, or optical filter by more than 2.5 percent of the span value. If the CEMS includes pollutant and diluent monitors, the CD must be determined separately for each in terms of concentrations (See Performance Specification 3 for the diluent specifications), and none of the CDs may exceed the specification.

13.2 Relative Accuracy Performance Specification. The RA of the CEMS must be no greater than 20 percent when RMis used in the denominator of Eq. 2–6 (average emissions during test are greater than 50 percent of the emission standard) or 10 percent when the applicable emission standard is used in the denominator of Eq. 2–6 (average emissions during test are less than 50 percent of the emission standard). For SO_2emission standards of 130 to and including 86 ng/J (0.30 and 0.20 lb/million Btu), inclusive, use 15 percent of the applicable standard; below 86 ng/J (0.20 lb/million Btu), use 20 percent of the emission standard.

MPU03438

APPENDIX K

AETB REQUIREMENTS

Interpoll Laboratories, Inc.
4500 Ball Road NE
Circle Pines, MN 55014-1819
Tel: 763-786-6020
Fax: 763-786-7854
www.interpoll-labs.com

August 19, 2013

Manitowoc Public Utilities
Thomas E. Reed
1303 South 8th Street
P.O. Box 1090
Manitowoc, WI 54221-1090

Re: Part 75 Air Emission Testing Body Requirements

Mr. Reed

This letter addresses the requirements of 40 CFR Part 75. Specifically; effective March 27, 2012, 40 CFR Part 75 test programs must be conducted by an Air Emissions Testing Body (AETB) in accordance with the requirements set forth in ASTM D 7036-04, Standard Practice for Competent Air Emission Testing Body.

Consistent with Section 6.2.1(c), Appendix A, 40 CFR Part 75, the AETB shall provide to each customer a certification that the AETB operates in conformance with, and that data has been collected in accordance with, the requirements of ASTM D 7036-04.

This letter serves as certification that Interpoll Laboratories, Inc. does provide data and services which comply with the above requirements.

Regards,

Daniel Despen
President
Interpoll Laboratories, Inc.

AN EQUAL OPPORTUNITY EMPLOYER

MPU03440

Stack Vision Entry Requirements

Required AETB Data Per Part 75

Field	Entry	Description
QI Last Name	Aaron	Required-Qualified Individual's last name
QI First Name	Wilson	Required-Qualified Individual's first name
QI Middle Initial	M.	Required-Qualified Individual's middle initial
AETB Name	Interpoll Laboratories, Inc.	Required-The AETB company whom the Qualified Individual represents.
AETB Phone Number	763-786-6020	Required-AETB company phone number.
AETB Email	stack@interpoll-labs.com	Required-AETB company email address or the email address of the qualified individual.
Exam Date	1/13/2012	Required-Date the Qualified Individual completed the AETB exam that certifies this person to conduct RATA tests.
Exam Provider Name	Source Evaluation Society	Required-Name of the agency who provided the exam
Exam Provider Email	gstiprogram@gmail.com	Required-Email address for the agency who provided the exam.
Comment		Optional field for additional comments.

Note-Interpoll Laboratories will be providing a letter of certification signed by a member of the senior management staff of the AETB for the clients records.

MPU03441