RESULTS OF THE AUGUST 8, 2012 RELATIVE ACCURACY TEST AUDIT OF THE $CO/SO_2/NO_X/O_2$ CEM SYSTEM INSTALLED ON THE NO.8 BOILER BAGHOUSE OUTLET AT THE MANITOWOC PUBLIC UTILITIES FACILITY IN MANITOWOC, WISCONSIN

interpoll

Interpoll Laboratories, Inc.
4500 Ball Road N.E.
Circle Pines, Minnesota 55014-1819

TEL: (763) 786-6020
FAX: (763) 786-7854

RESULTS OF THE AUGUST 8, 2012 RELATIVE ACCURACY TEST AUDIT OF THE $CO/SO_2/NO_x/O_2$ CEM SYSTEM INSTALLED ON THE NO. 8 BOILER BAGHOUSE OUTLET AT THE MANITOWOC PUBLIC UTILITIES FACILITY IN MANITOWOC, WISCONSIN

Submitted to:

MECHANICAL SYSTEMS
480 Progress Way
Sun Prairie, WI 53590

Attention:

Rocky Orzechowski

Reviewed by:

Kathleen Eickstadt
Department Coordinator
Source Testing

Report Number 12-31301 (No. 8)
August 28, 2012
DVH

TABLE OF CONTENTS

ABBREVIATIONS iii

1 INTRODUCTION 1

2 SUMMARY AND DISCUSSION 2

APPENDICES:

A - Reference Method Computer Printouts
B - Measurement Systems Performance Specifications
C - Calibration Gas Certification Sheets
D - Gas Analyzer Specifications
E - CEM Instrument Information Sheets
F - CEM Computer Printouts
G - Sample Train Calibrations
J - Procedures
I - Calculation Equations

ABBREVIATIONS

ACFM	actual cubic feet per minute
cc (ml)	cubic centimeter (milliliter)
DSCFM	dry standard cubic foot of dry gas per minute
DSML	dry standard milliliter
DEG-F (°F)	degrees Fahrenheit
DIA.	Diameter
FT/SEC	feet per second
g	gram
GPM	gallons per minute
GR/ACF	grains per actual cubic foot
GR/DSCF	grains per dry standard cubic foot
g/dscm	grams per dry standard meter
HP	horsepower
HRS	hours
IN.	inches
IN.HG.	inches of mercury
IN.WC.	inches of water
LB	pound
LB/DSCF	pounds per dry standard cubic foot
LB/HR	pounds per hour
LB/10^6BTU	pounds per million British Thermal Units heat input
LB/MMBTU	pounds per million British Thermal Units heat input
MW	megawatt
mg/dscm	milligrams per dry standard cubic meter
ug/dscm	micrograms per dry standard cubic meter
microns (um)	micrometer
MIN.	minutes
ng	nanograms
PM	particulate matter
PPH	pounds per hour
PPM	parts per million
ppmC	parts per million carbon
ppm,d	parts per million, dry
ppm,w	parts per million, wet
ppt	parts per trillion
PSI	pounds per square inch
SQ.FT.	square feet
TPD	tons per day
ug	micrograms
v/v	percent by volume
w/w	percent by weight

Standard conditions are defined as 68 °F (20 °C) and 29.92 IN. of mercury pressure

1 INTRODUCTION

On August 8, 2012, Interpoll Laboratories personnel conducted a Relative Accuracy Test Audit (RATA) on the following Continuous Emission Monitoring (CEM) System installed on the Boiler 8 Baghouse Outlet at the Manitowoc Public Utilities Facility in Manitowoc, Wisconsin:

Monitor Type	Manufacturer	Model	Serial No.	Location
SO2	Thermo Electron	43i	0510511566	No. 8 Boiler
NOx	Thermo Electron	42i	0510511562	No. 8 Boiler
CO2	Thermo Electron	41i	0510511585	No. 8 Boiler

A relative accuracy test certification was performed on the carbon monoxide analyzer associated with this CEM system.

On-site testing was performed by Rory Eiynck and Andrew Strong. Coordination between testing activities and plant operation was provided by Jim Fanning of Mechanical Systems Inc and Tim Harding of Manitowoc Public Utilities. The test was not witnessed by a representative of the Wisconsin Department of Natural Resources.

The RATA was performed in accordance with EPA Methods 3A, 6C, 7E and 10, CFR Title 40, Part 60, Appendix A (revised July 1, 2012). For oxygen analysis, a slip stream of sample gas was withdrawn from the exhaust gas stream using test ports on the stack adjacent to the CEMS using a heat-traced probe and filter assembly. After passing through the filter, the gas passed through two condenser-type moisture removal systems operating in series. The particulate-free dry gas was then transported to the oxygen analyzer with the excess exhausted to the atmosphere through a calibrated orifice which was used to ensure that the flow from the stack exceeds the requirements of the analyzer. For SO_2, NO_x, CO and CO_2 analysis, a dilution probe based system was used. In this system a slip stream of exhaust gas is drawn from the exhaust gas stream using an M&C dilution probe. The sample stream is filtered and diluted (approximate dilution during these tests was 100:1) before delivery to the analyzers. The analog response of the analyzers in both systems was recorded using a computer data logger. The analyzers were calibrated with EPA protocol gases. The results of the CEM Relative Accuracy Test Audit are summarized in Section 2. Field data and all other supporting information are presented in the appendices.

MPU00895

2 SUMMARY AND DISCUSSION

The results of the Relative Accuracy Test Audit are summarized in the following tables. An overview of the results is presented below:

NO. 8 BOILER RELATIVE ACCURACY RESULTS

Parameter	Units	Measured (%)
CO	LB/10^6BTU	7.51
CO	ppm,w	6.18
NO_x	LB/10^6BTU	8.71
NO_x	ppm,w	8.32
SO_2	ppm,w	3.43
SO_2	LB/10^6BTU	4.01
CO_2	% v/v,w	0.76

No difficulties were encountered in the field or in the evaluation of the data. On the basis of these facts and a complete review of the data and results, it is our opinion that the CO_2, SO_2 CO and NO_x concentrations reported herein are accurate and closely reflect the actual values, which existed at the time the test was performed.

MPU00896

Results of the August 8th, 2012 Relative Accuracy Test Audit of the CO Analyzer Installed on the No. 8 Boiler Duct at the Manitowoc Public Utilities Plant located in Manitowoc, Wisconsin.

			190 Klbs/Hr		
			CO Lbs/mmBTU		
Run	Date	Time	RM	CEM	DIFF.
1	08/08/12	7:05 - 7:25	0.016	0.015	0.001
2	* 08/08/12	7:40 - 8:00	0.018	0.016	0.002
3	08/08/12	8:10 - 8:30	0.018	0.016	0.002
4	08/08/12	8:40 - 9:00	0.019	0.017	0.002
5	08/08/12	9:40 - 10:00	0.019	0.019	0.000
6	08/08/12	10:10 - 10:30	0.019	0.018	0.001
7	08/08/12	10:40 - 11:00	0.019	0.019	0.000
8	08/08/12	11:10 - 11:30	0.020	0.020	0.000
9	08/08/12	11:40 - 12:00	0.020	0.020	0.000
10	08/08/12	12:10 - 12:30	0.021	0.020	0.001
Average Diff.			0.019	0.018	0.001
Confidence Coefficient					0.000641
Standard Deviation					0.001
Relative Accuracy					7.51

* Run was not used in RA calculation

RM = Reference Method

CEM = Continuous Emission Monitor

Results of the August 8th, 2012 Relative Accuracy Test Audit of the CO Analyzer Installed on the No. 8 Boiler Duct at the Manitowoc Public Utilities Plant located in Manitowoc, Wisconsin.

				190 Klbs/Hr		
				CO ppm, wet		
Run		Date	Time	RM	CEM	DIFF.
1		08/08/12	7:05 - 7:25	16.1	15.0	1.1
2		08/08/12	7:40 - 8:00	17.7	16.3	1.4
3		08/08/12	8:10 - 8:30	18.0	16.3	1.7
4	*	08/08/12	8:40 - 9:00	19.6	17.7	1.9
5		08/08/12	9:40 - 10:00	19.3	18.6	0.7
6		08/08/12	10:10 - 10:30	18.7	18.5	0.2
7		08/08/12	10:40 - 11:00	19.5	19.3	0.2
8		08/08/12	11:10 - 11:30	20.6	20.5	0.1
9		08/08/12	11:40 - 12:00	20.8	20.5	0.3
10		08/08/12	12:10 - 12:30	21.2	20.3	0.9
Average Diff.				19.100	18.367	0.733
Confidence Coefficient						0.446555
Standard Deviation						0.581
Relative Accuracy						6.18

* Run was not used in RA calculation

RM = Reference Method

CEM = Continuous Emission Monitor

Results of the August 8th, 2012 Relative Accuracy Test Audit of the NOx Analyzer Installed on the No. 8 Boiler Duct at the Manitowoc Public Utilities Plant located in Manitowoc, Wisconsin.

			190 Klbs/Hr		
			Nox LbsmmBTU		
Run	Date	Time	RM	CEM	DIFF.
1	08/08/12	7:05 - 7:25	0.109	0.102	0.007
2	08/08/12	7:40 - 8:00	0.075	0.069	0.006
3	08/08/12	8:10 - 8:30	0.068	0.061	0.007
4	08/08/12	8:40 - 9:00	0.065	0.059	0.006
5	08/08/12	9:40 - 10:00	0.077	0.070	0.007
6	08/08/12	10:10 - 10:30	0.076	0.069	0.007
7	08/08/12	10:40 - 11:00	0.074	0.068	0.006
8 *	08/08/12	11:10 - 11:30	0.074	0.067	0.007
9	08/08/12	11:40 - 12:00	0.081	0.075	0.006
10	08/08/12	12:10 - 12:30	0.083	0.077	0.006
Average Diff.			0.079	0.072	0.006
Confidence Coefficient					0.000405
Standard Deviation					0.001
Relative Accuracy					8.71

* Run was not used in RA calculation

RM = Reference Method

CEM = Continuous Emission Monitor

Results of the August 8th, 2012 Relative Accuracy Test Audit of the NOx Analyzer Installed on the No. 8 Boiler Duct at the Manitowoc Public Utilities Plant located in Manitowoc, Wisconsin.

			190 Klbs/Hr		
			Nox ppm, wet		
Run	Date	Time	RM	CEM	DIFF.
1	08/08/12	7:05 - 7:25	65.9	62.4	3.5
2	08/08/12	7:40 - 8:00	45.8	42.0	3.8
3	08/08/12	8:10 - 8:30	41.4	38.0	3.4
4	08/08/12	8:40 - 9:00	40.3	36.6	3.7
5	08/08/12	9:40 - 10:00	46.5	42.6	3.9
6	08/08/12	10:10 - 10:30	46.3	42.4	3.9
7	08/08/12	10:40 - 11:00	45.4	41.6	3.8
8	08/08/12	11:10 - 11:30	46.1	41.9	4.2
9 *	08/08/12	11:40 - 12:00	50.4	46.0	4.4
10	08/08/12	12:10 - 12:30	50.5	46.7	3.8
Average Diff.			47.578	43.800	3.778
Confidence Coefficient					0.179356
Standard Deviation					0.233
Relative Accuracy					8.32

* Run was not used in RA calculation

RM = Reference Method

CEM = Continuous Emission Monitor

Results of the August 8th, 2012 Relative Accuracy Test Audit of the SO2 Analyzer Installed on the No. 8 Boiler Duct at the Manitowoc Public Utilities Plant located in Manitowoc, Wisconsin.

				190 Klbs/Hr		
				SO_2 ppm, wet		
Run		Date	Time	RM	CEM	DIFF.
1		08/08/12	7:05 - 7:25	56.2	53.9	2.3
2		08/08/12	7:40 - 8:00	81.7	78.7	3.0
3		08/08/12	8:10 - 8:30	100.5	97.5	3.0
4	*	08/08/12	8:40 - 9:00	111.9	107.8	4.1
5		08/08/12	9:40 - 10:00	95.3	93.1	2.2
6		08/08/12	10:10 - 10:30	100.0	97.3	2.7
7		08/08/12	10:40 - 11:00	108.6	105.3	3.3
8		08/08/12	11:10 - 11:30	124.7	121.5	3.2
9		08/08/12	11:40 - 12:00	106.2	105.7	0.5
10		08/08/12	12:10 - 12:30	81.6	78.5	3.1
Average Diff.				94.978	92.389	2.589
Confidence Coefficient						0.670598
Standard Deviation						0.872
Relative Accuracy						3.43

* Run was not used in RA calculation

RM = Reference Method

CEM = Continuous Emission Monitor

Results of the August 8th, 2012 Relative Accuracy Test Audit of the SO2 Analyzer Installed on the No. 8 Boiler Duct at the Manitowoc Public Utilities Plant located in Manitowoc, Wisconsin.

			190 Klbs/Hr		
			SO_2 Lbs/mmBTU		
Run	Date	Time	RM	CEM	DIFF.
1	08/08/12	7:05 - 7:25	0.129	0.122	0.007
2	08/08/12	7:40 - 8:00	0.186	0.179	0.007
3	08/08/12	8:10 - 8:30	0.228	0.219	0.009
4 *	08/08/12	8:40 - 9:00	0.253	0.241	0.012
5	08/08/12	9:40 - 10:00	0.218	0.212	0.006
6	08/08/12	10:10 - 10:30	0.228	0.220	0.008
7	08/08/12	10:40 - 11:00	0.247	0.238	0.009
8	08/08/12	11:10 - 11:30	0.278	0.271	0.007
9	08/08/12	11:40 - 12:00	0.238	0.238	0.000
10	08/08/12	12:10 - 12:30	0.187	0.181	0.006
Average Diff.			0.215	0.209	0.007
Confidence Coefficient					0.002074
Standard Deviation					0.003
Relative Accuracy					4.01

* Run was not used in RA calculation

RM = Reference Method

CEM = Continuous Emission Monitor

Results of the August 8th, 2012 Relative Accuracy Test Audit of the CO2 Analyzer Installed on the No. 8 Boiler Duct at the Manitowoc Public Utilities Plant located in Manitowoc, Wisconsin.

			190 Klbs/Hr		
			CO2 % wet		
Run	Date	Time	RM	CEM	DIFF.
1	08/08/12	7:05 - 7:25	13.1	13.2	-0.1
2	08/08/12	7:40 - 8:00	13.1	13.2	-0.1
3	08/08/12	8:10 - 8:30	13.2	13.3	-0.1
4	08/08/12	8:40 - 9:00	13.3	13.4	-0.1
5	08/08/12	9:40 - 10:00	13.1	13.1	0.0
6	08/08/12	10:10 - 10:30	13.1	13.2	-0.1
7	08/08/12	10:40 - 11:00	13.2	13.2	0.0
8	08/08/12	11:10 - 11:30	13.5	13.4	0.1
9	08/08/12	11:40 - 12:00	13.4	13.3	0.1
10 *	08/08/12	12:10 - 12:30	13.1	13.0	0.1
Average Diff.			13.222	13.256	-0.033
Confidence Coefficient					0.066568
Standard Deviation					0.087
Relative Accuracy					0.76

* Run was not used in RA calculation

RM = Reference Method

CEM = Continuous Emission Monitor

APPENDIX A

REFERENCE METHOD COMPUTER PRINTOUTS

MSI / Manitowoc PU
Manitowoc, WI
No. 8 Boiler Duct

8/8/2012
Test 2 Run 1

Start 7:05 AM
Stop 7:25 AM

Time	SO_2 ppm, w	Nox ppm, w	O_2 %, d	CO_2 ppm, w	CO ppm, w
7:05	38.46	78.19	4.971	13	15.2
7:06	41.24	77.63	4.885	13.13	15.45
7:07	44.14	74.1	4.829	13.12	15.5
7:08	52.36	72.52	4.785	13.18	15.51
7:09	44.87	72.4	4.839	13.16	15.51
7:10	43.21	71.47	4.832	13.14	15.69
7:11	51.42	69.99	4.873	13.13	15.8
7:12	54.14	66.74	4.781	13.17	15.9
7:13	61.13	67.67	4.753	13.2	16.08
7:14	65.51	64.91	4.802	13.16	16.09
7:15	59.16	63.81	4.787	13.17	16.08
7:16	63.18	64.37	4.816	13.12	16.27
7:17	59.05	62.67	4.865	13.08	16.32
7:18	60.65	62.23	4.812	13.17	16.39
7:19	60.23	60.99	4.874	13.12	16.38
7:20	68.63	60.79	4.809	13.15	16.39
7:21	66.56	59.39	4.812	13.15	16.38
7:22	65.38	59.59	4.796	13.18	16.58
7:23	62.99	58.52	4.876	13.08	16.64
7:24	57.65	59.38	4.994	12.96	16.47
7:25	61.7	58.58	4.927	13.06	16.78
Average	56.270	65.997	4.844	13.125	16.067

FIELD CALCULATIONS

RAW DATA TABLE

Instrument	ppm or %	Zero	Span	Gas	Gas Corrected for Calibration	
CO_2 (wet)	13.125	0.05	8.60	8.54	13.06	wet
O_2 (dry)	4.844	0.04	11.06	11.03	4.81	dry
Nox (wet)	65.997	-0.08	113.95	113.70	65.88	wet
SO_2 (wet)	56.270	0.13	117.75	117.80	56.23	wet
CO (wet)	16.067	-0.25	112.92	111.60	16.09	wet
Fuel Factor CO_2	1805					

RESULTS

CO_2 %, wet	13.1
Nox ppm, wet	65.9
SO_2 ppm, wet	56.2
CO ppm, wet	16.09
NOx LB/mmBTU	0.109
SO_2 LB/mmBTU	0.129
CO Lbm/mmBTU	0.016

MSI / Manitowoc PU
Manitowoc, WI
No. 8 Boiler Duct

8/8/2012
Test 2 Run 2

Start	7:40 AM
Stop	8:00 AM

Time	SO_2 ppm, w	Nox ppm, w	O_2 %, d	CO_2 ppm, w	CO ppm, w
7:40	71.85	50.58	5.01	13.09	17.72
7:41	75.65	48.89	4.914	13.17	17.63
7:42	73.92	48.53	4.919	13.15	17.82
7:43	79.09	47.85	4.918	13.17	17.88
7:44	75.43	47.85	4.998	13.07	17.87
7:45	73.22	49.24	5.033	13.07	17.88
7:46	74.91	47.84	5.023	13.08	17.87
7:47	79.13	46.6	4.889	13.21	17.88
7:48	83.7	45.37	4.745	13.28	17.83
7:49	80.48	44.79	4.719	13.31	17.57
7:50	84.96	43.68	4.679	13.39	17.68
7:51	87.3	43.15	4.697	13.35	17.57
7:52	83.65	44.44	4.68	13.39	17.57
7:53	82.88	45.69	4.763	13.28	17.57
7:54	91.64	45.55	4.82	13.28	17.49
7:55	85.71	46.39	4.854	13.26	17.27
7:56	88.83	45.81	4.774	13.32	17.26
7:57	85.75	45.76	4.862	13.22	17.27
7:58	88.23	43.04	4.832	13.25	17.57
7:59	86.58	43.69	4.813	13.25	17.57
8:00	85.45	44.59	4.863	13.23	17.56
Average	**81.827**	**46.159**	**4.848**	**13.230**	**17.635**

FIELD CALCULATIONS

RAW DATA TABLE

Instrument	ppm or %	Zero	Span	Gas	Gas Corrected for Calibration	
CO_2 (wet)	13.230	0.06	8.63	8.54	**13.13**	wet
O_2 (dry)	4.848	0.04	11.07	11.03	**4.81**	dry
Nox (wet)	46.159	-0.11	114.85	113.70	**45.76**	wet
SO_2 (wet)	81.827	-0.03	118.05	117.80	**81.66**	wet
CO (wet)	17.635	-0.26	112.85	111.60	**17.65**	wet

Fuel Factor CO_2 **1805**

RESULTS

CO_2 %, wet	13.1
Nox ppm, wet	45.8
SO_2 ppm, wet	81.7
CO ppm, wet	17.65
NOx LB/mmBTU	0.075
SO_2 LB/mmBTU	0.186
CO Lbm/mmBTU	0.018

MSI / Manitowoc PU
Manitowoc, WI
No. 8 Boiler Duct

8/8/2012
Test 2 Run 3

Start 8:10 AM
Stop 8:30 AM

Time	SO_2 ppm, w	Nox ppm, w	O_2 %, d	CO_2 ppm, w	CO ppm, w
8:10	88.8	43	4.878	13.2	13.91
8:11	96.95	43.29	4.764	13.26	17.86
8:12	87.37	41.61	4.801	13.29	17.87
8:13	91.51	42.95	4.74	13.33	17.87
8:14	93.3	42.5	4.666	13.36	17.92
8:15	93.05	40.5	4.692	13.37	18.17
8:16	113.8	41.34	4.667	13.39	18.12
8:17	101.3	43.24	4.75	13.33	17.92
8:18	104.3	43.3	4.705	13.37	18.12
8:19	103.5	41.71	4.703	13.33	18.16
8:20	101.9	41.13	4.699	13.31	18.24
8:21	106.3	41.33	4.727	13.35	18.25
8:22	107.9	41.6	4.722	13.33	18.16
8:23	105.6	40.76	4.715	13.34	18.42
8:24	108.5	41.44	4.735	13.33	18.42
8:25	108.2	42.05	4.711	13.32	18.3
8:26	117.5	41.29	4.736	13.36	18.02
8:27	111.3	42.1	4.762	13.32	17.85
8:28	94.41	41.39	4.749	13.34	18.06
8:29	91.61	43.08	4.725	13.36	18.37
8:30	93.25	41.23	4.724	13.38	18.4
Average	100.969	41.945	4.732	13.332	17.924

FIELD CALCULATIONS

RAW DATA TABLE

Instrument	ppm or %	Zero	Span	Gas	Gas Corrected for Calibration	
CO_2 (wet)	13.332	0.07	8.65	8.54	13.21	wet
O_2 (dry)	4.732	0.03	11.08	11.03	4.70	dry
Nox (wet)	41.945	-0.09	115.30	113.70	41.42	wet
SO_2 (wet)	100.969	-0.05	118.35	117.80	100.51	wet
CO (wet)	17.924	-0.24	112.65	111.60	17.96	wet
Fuel Factor CO_2	1805					

RESULTS

CO_2 %, wet	13.2
Nox ppm, wet	41.4
SO_2 ppm, wet	100.5
CO ppm, wet	17.96
NOx LB/mmBTU	0.068
SO_2 LB/mmBTU	0.228
CO Lbm/mmBTU	0.018

MSI / Manitowoc PU
Manitowoc, WI
No. 8 Boiler Duct

8/8/2012
Test 2 Run 4

Start 8:40 AM
Stop 9:00 AM

Time	SO_2 ppm, w	Nox ppm, w	O_2 %, d	CO_2 ppm, w	CO ppm, w
8:40	94.07	42.11	4.767	13.34	19.16
8:41	107.6	43.24	4.761	13.36	18.67
8:42	109.9	41.84	4.693	13.39	18.4
8:43	97.85	42.03	4.741	13.33	18.55
8:44	96.35	40.83	4.748	13.36	18.8
8:45	91.81	41.27	4.795	13.28	18.8
8:46	98.65	40.93	4.684	13.37	19.09
8:47	107	39.15	4.732	13.34	19
8:48	109.4	40.52	4.677	13.42	19
8:49	119.9	40.47	4.659	13.46	19
8:50	127.4	39.63	4.617	13.44	19
8:51	119.6	39.16	4.618	13.5	19
8:52	125.2	41.71	4.586	13.51	19.3
8:53	118.7	40.22	4.662	13.43	19.07
8:54	118.1	40.8	4.684	13.38	19.3
8:55	115.5	41.05	4.655	13.41	19.31
8:56	127.7	40.2	4.595	13.51	19.3
8:57	113.4	39.88	4.655	13.42	19.3
8:58	117.1	40.09	4.642	13.41	19.5
8:59	125.3	39.44	4.67	13.42	19.11
9:00	121.3	38.94	4.6	13.48	19.34
Average	112.468	40.643	4.678	13.408	19.048

FIELD CALCULATIONS

RAW DATA TABLE

Instrument	ppm or %	Zero	Span	Gas	Gas Corrected for Calibration	
CO_2 (wet)	13.408	0.09	8.66	8.54	13.276	wet
O_2 (dry)	4.678	0.03	11.07	11.03	4.646	dry
Nox (wet)	40.643	-0.11	114.85	113.70	40.30	wet
SO_2 (wet)	112.468	0.12	118.35	117.80	111.94	wet
CO (wet)	19.048	-0.23	112.60	111.60	19.06	wet

Fuel Factor CO_2 1805

RESULTS

CO_2 %, wet	13.3
Nox ppm, wet	40.3
SO_2 ppm, wet	111.9
CO ppm, wet	19.06
NOx LB/mmBTU	0.065
SO_2 LB/mmBTU	0.253
CO Lbm/mmBTU	0.019

MSI / Manitowoc PU
Manitowoc, WI
No. 8 Boiler Duct

8/8/2012
Test 2 Run 5

Start 9:40 AM
Stop 10:00 AM

Time	SO_2 ppm, w	Nox ppm, w	O_2 %, d	CO_2 ppm, w	CO ppm, w
9:40	103.2	49.2	4.983	13.1	18.71
9:41	113.3	48.86	4.952	13.06	19.3
9:42	91.78	47.43	4.906	13.2	19.4
9:43	91.75	47.8	4.888	13.21	19.6
9:44	97.62	47.73	4.899	13.17	19.51
9:45	95.69	45.32	4.888	13.21	19.35
9:46	94.77	45.59	4.808	13.27	19.6
9:47	98.06	46.52	4.754	13.33	19.6
9:48	100.6	46.32	4.825	13.23	19.61
9:49	91.26	49.1	4.87	13.23	19.6
9:50	87.36	46.28	4.85	13.19	19.6
9:51	97.5	44.11	4.858	13.2	19.61
9:52	85.67	45.66	4.844	13.22	19.4
9:53	88.31	45.82	4.881	13.2	19.6
9:54	94.21	46.18	4.862	13.21	19.36
9:55	100	46.69	4.785	13.29	19.3
9:56	97.69	46.77	4.767	13.31	19.3
9:57	98.96	46.65	4.805	13.31	19.17
9:58	96.44	47.67	4.851	13.27	19.02
9:59	94.41	47.63	4.845	13.26	18.87
10:00	97.78	45.94	4.836	13.29	18.86
Average	96.017	46.822	4.855	13.227	19.351

FIELD CALCULATIONS

RAW DATA TABLE

Instrument	ppm or %	Zero	Span	Gas	Gas Corrected for Calibration	
CO_2 (wet)	13.227	0.09	8.65	8.54	13.11	wet
O_2 (dry)	4.855	0.03	11.05	11.03	4.83	dry
Nox (wet)	46.822	-0.12	114.55	113.70	46.55	wet
SO_2 (wet)	96.017	0.18	118.65	117.80	95.30	wet
CO (wet)	19.351	-0.09	112.20	111.60	19.32	wet
Fuel Factor CO_2	1805					

RESULTS

CO_2 %, wet	13.1
Nox ppm, wet	46.5
SO_2 ppm, wet	95.3
CO ppm, wet	19.32
NOx LB/mmBTU	0.077
SO_2 LB/mmBTU	0.218
CO Lbm/mmBTU	0.019

MSI / Manitowoc PU
Manitowoc, WI
No. 8 Boiler Duct

8/8/2012
Test 2 Run 6

Start 10:10 AM
Stop 10:30 AM

Time	SO_2 ppm, w	Nox ppm, w	O_2 %, d	CO_2 ppm, w	CO ppm, w
10:10	103.8	46.56	4.725	13.33	18.38
10:11	111.9	47.06	4.756	13.31	18.89
10:12	110.8	47.88	4.792	13.3	18.71
10:13	95.57	47.86	4.876	13.25	18.71
10:14	96.02	45.42	4.822	13.26	18.92
10:15	104.4	45.97	4.805	13.26	18.72
10:16	98.12	48.32	4.861	13.26	18.53
10:17	101.1	47.33	4.817	13.28	18.68
10:18	94.97	47.18	4.842	13.23	18.46
10:19	102.4	46.92	4.791	13.26	18.71
10:20	101.6	46.85	4.775	13.32	18.42
10:21	97.39	47.78	4.833	13.24	18.5
10:22	99	46.92	4.797	13.29	18.7
10:23	94.13	44.23	4.821	13.3	18.71
10:24	103.5	44.71	4.801	13.27	18.99
10:25	106.8	47.32	4.844	13.24	18.77
10:26	103	46.57	4.798	13.3	18.71
10:27	94.19	45.71	4.815	13.29	18.86
10:28	104.8	47.78	4.786	13.29	19.16
10:29	95.34	45.56	4.842	13.19	19.01
10:30	94.48	44.66	4.808	13.32	19.3
Average	100.634	46.600	4.810	13.276	18.754

FIELD CALCULATIONS

RAW DATA TABLE

Instrument	ppm or %	Zero	Span	Gas	Gas Corrected for Calibration	
CO_2 (wet)	13.276	0.08	8.66	8.54	13.14	wet
O_2 (dry)	4.810	0.03	11.04	11.03	4.79	dry
Nox (wet)	46.600	-0.06	114.55	113.70	46.29	wet
SO_2 (wet)	100.634	0.20	118.50	117.80	100.01	wet
CO (wet)	18.754	0.05	111.50	111.60	18.73	wet

Fuel Factor CO_2 1805

RESULTS

CO_2 %, wet	13.1
Nox ppm, wet	46.3
SO_2 ppm, wet	100.0
CO ppm, wet	18.73
NOx LB/mmBTU	0.076
SO_2 LB/mmBTU	0.228
CO Lbm/mmBTU	0.019

MSI / Manitowoc PU
Manitowoc, WI
No. 8 Boiler Duct

8/8/2012
Test 2 Run 7

Start	10:40 AM
Stop	11:00 AM

Time	SO_2 ppm, w	Nox ppm, w	O_2 %, d	CO_2 ppm, w	CO ppm, w
10:40	101.7	45.65	4.76	13.33	19.32
10:41	104.7	47.61	4.684	13.35	19.32
10:42	106.4	45.93	4.759	13.28	19.4
10:43	109.6	45.66	4.722	13.33	19.86
10:44	107.7	46.03	4.669	13.34	19.71
10:45	108.5	44.94	4.695	13.34	19.84
10:46	111	47.38	4.779	13.3	19.9
10:47	111	47.21	4.783	13.33	19.35
10:48	94.9	47.5	4.837	13.22	19.34
10:49	106	46.81	4.76	13.26	19.55
10:50	107.3	47.49	4.751	13.28	19.1
10:51	112.6	45.47	4.76	13.27	19.25
10:52	107.2	46.02	4.785	13.26	19
10:53	102.1	45.35	4.768	13.28	19.25
10:54	102.5	45.81	4.724	13.32	19.3
10:55	112.4	44.53	4.733	13.29	19.31
10:56	112.2	45.04	4.681	13.35	19.4
10:57	115.8	44.9	4.668	13.32	19.6
10:58	118	44.22	4.699	13.35	19.6
10:59	123.3	43.44	4.604	13.39	19.75
11:00	124.6	44.92	4.621	13.38	19.9
Average	109.500	45.805	4.726	13.313	19.479

FIELD CALCULATIONS

RAW DATA TABLE

Instrument	ppm or %	Zero	Span	Gas	Gas Corrected for Calibration	
CO_2 (wet)	13.313	0.08	8.65	8.54	13.19	wet
O_2 (dry)	4.726	0.03	11.04	11.03	4.70	dry
Nox (wet)	45.805	-0.05	114.75	113.70	45.41	wet
SO_2 (wet)	109.500	0.33	118.80	117.80	108.55	wet
CO (wet)	19.479	0.04	111.30	111.60	19.50	wet
Fuel Factor CO_2	1805					

RESULTS

CO_2 %, wet	13.2
Nox ppm, wet	45.4
SO_2 ppm, wet	108.6
CO ppm, wet	19.50
NOx LB/mmBTU	0.074
SO_2 LB/mmBTU	0.247
CO Lbm/mmBTU	0.019

MSI / Manitowoc PU
Manitowoc, WI
No. 8 Boiler Duct

8/8/2012
Test 2 Run 8

Start 11:10 AM
Stop 11:30 AM

Time	SO_2 ppm, w	Nox ppm, w	O_2 %, d	CO_2 ppm, w	CO ppm, w
11:10	119.7	44.9	4.495	13.48	20.27
11:11	123.2	42.59	4.548	13.48	20.87
11:12	125.1	42.85	4.46	13.55	20.5
11:13	144.8	42.77	4.353	13.62	20.46
11:14	143.5	43.16	4.389	13.63	20.54
11:15	141.7	43.3	4.369	13.64	20.84
11:16	138.1	43.52	4.293	13.65	21.08
11:17	133.1	43.68	4.361	13.68	20.88
11:18	128	44.91	4.418	13.64	20.68
11:19	124.8	46.52	4.422	13.57	20.51
11:20	132	47.72	4.471	13.62	20.78
11:21	117.8	47.36	4.554	13.49	20.5
11:22	115.6	48.4	4.549	13.5	20.73
11:23	125.4	48.55	4.513	13.57	20.46
11:24	120.1	49.18	4.542	13.49	20.2
11:25	118.7	47.94	4.602	13.46	20.21
11:26	123.6	49.44	4.563	13.52	20.3
11:27	122.1	49.69	4.643	13.41	20.5
11:28	115.4	48.86	4.666	13.37	20.51
11:29	121.2	49.74	4.662	13.45	20.5
11:30	113	51.97	4.701	13.35	20.5
Average	126.043	46.526	4.504	13.532	20.563

FIELD CALCULATIONS

RAW DATA TABLE

Instrument	ppm or %	Zero	Span	Gas	Gas Corrected for Calibration	
CO_2 (wet)	13.532	0.07	8.61	8.54	13.46	wet
O_2 (dry)	4.504	0.03	11.04	11.03	4.48	dry
Nox (wet)	46.526	-0.05	114.90	113.70	46.07	wet
SO_2 (wet)	126.043	0.25	119.10	117.80	124.68	wet
CO (wet)	20.563	0.04	111.15	111.60	20.62	wet
Fuel Factor CO_2	1805					

RESULTS

CO_2 %, wet	13.5
Nox ppm, wet	46.1
SO_2 ppm, wet	124.7
CO ppm, wet	20.62
NOx LB/mmBTU	0.074
SO_2 LB/mmBTU	0.278
CO Lbm/mmBTU	0.020

MSI / Manitowoc PU
Manitowoc, WI
No. 8 Boiler Duct

8/8/2012
Test 2 Run 9

Start 11:40 AM
Stop 12:00 PM

Time	SO_2 ppm, w	Nox ppm, w	O_2 %, d	CO_2 ppm, w	CO ppm, w
11:40	107.3	48.22	4.697	13.37	17.53
11:41	124.8	47.92	4.643	13.42	20.49
11:42	125.5	47.77	4.575	13.47	20.29
11:43	125.6	48.08	4.55	13.53	20.49
11:44	119	47.55	4.659	13.39	20.71
11:45	112.2	47.43	4.692	13.43	20.83
11:46	112.3	48.93	4.632	13.47	20.73
11:47	112.9	47.71	4.545	13.48	20.49
11:48	104.2	47.61	4.59	13.49	20.49
11:49	113.7	48.21	4.467	13.58	20.39
11:50	128.9	49.3	4.408	13.6	20.24
11:51	118	49.08	4.611	13.46	20.19
11:52	116.6	49.13	4.558	13.49	20.96
11:53	118.7	49.41	4.583	13.45	21.42
11:54	102.6	52.79	4.709	13.44	21.23
11:55	93.92	54.36	4.74	13.43	21.42
11:56	94.59	55.79	4.727	13.4	21.62
11:57	92.88	57.78	4.769	13.42	21.44
11:58	74.48	57.89	4.882	13.32	21.43
11:59	73.13	58.28	4.907	13.26	21.72
12:00	76	56.53	4.901	13.23	21.53
Average	107.014	50.941	4.659	13.435	20.745

FIELD CALCULATIONS

RAW DATA TABLE

Instrument	ppm or %	Zero	Span	Gas	Gas Corrected for Calibration	
CO_2 (wet)	13.435	0.06	8.61	8.54	13.36	wet
O_2 (dry)	4.659	0.03	11.04	11.03	4.64	dry
Nox (wet)	50.941	-0.06	114.90	113.70	50.44	wet
SO_2 (wet)	107.014	0.28	118.65	117.80	106.22	wet
CO (wet)	20.745	0.05	110.90	111.60	20.84	wet
Fuel Factor CO_2	1805					

RESULTS

CO_2 %, wet	13.4
Nox ppm, wet	50.4
SO_2 ppm, wet	106.2
CO ppm, wet	20.84
NOx LB/mmBTU	0.081
SO_2 LB/mmBTU	0.238
CO Lbm/mmBTU	0.020

MSI / Manitowoc PU
Manitowoc, WI
No. 8 Boiler Duct

8/8/2012
Test 2 Run 10

Start	12:10 PM
Stop	12:30 PM

Time	SO_2 ppm, w	Nox ppm, w	O_2 %, d	CO_2 ppm, w	CO ppm, w
12:10	70.81	54.93	4.841	13.27	22.51
12:11	71.73	53.8	4.878	13.27	21.73
12:12	67.09	55.12	4.907	13.23	21.49
12:13	64.97	55.98	4.885	13.23	21.53
12:14	70.47	56.34	4.872	13.28	21.5
12:15	66.8	56.2	4.923	13.21	21.39
12:16	65.54	56.46	4.916	13.19	21.35
12:17	60.82	56.5	5.012	13.15	21.3
12:18	73.72	51.92	5.057	13.02	21.4
12:19	76.72	50.63	4.956	13.07	21.16
12:20	91.7	50.19	4.887	13.19	21.2
12:21	99.37	50.93	4.883	13.16	20.63
12:22	96.58	50.14	4.812	13.26	20.37
12:23	89.28	48.04	4.869	13.16	20.5
12:24	86.01	45.9	4.899	13.13	20.51
12:25	91.44	46.76	4.878	13.14	20.52
12:26	99.42	47.39	4.919	13.12	20.84
12:27	103.3	48.11	4.922	13.07	20.9
12:28	94.51	46.18	4.934	13.1	20.68
12:29	90.53	47.25	4.936	13.12	20.9
12:30	96.12	46.69	4.965	13.09	21.15
Average	82.235	51.212	4.912	13.165	21.122

FIELD CALCULATIONS

RAW DATA TABLE

Instrument	ppm or %	Zero	Span	Gas	Gas Corrected for Calibration	
CO_2 (wet)	13.165	0.07	8.62	8.54	13.08	wet
O_2 (dry)	4.912	0.03	11.04	11.03	4.89	dry
Nox (wet)	51.212	-0.09	115.40	113.70	50.51	wet
SO_2 (wet)	82.235	0.35	118.50	117.80	81.64	wet
CO (wet)	21.122	0.03	110.85	111.60	21.24	wet
Fuel Factor CO_2	1805					

RESULTS

CO_2 %, wet	13.1
Nox ppm, wet	50.5
SO_2 ppm, wet	81.6
CO ppm, wet	21.24
NOx LB/mmBTU	0.083
SO_2 LB/mmBTU	0.187
CO Lbm/mmBTU	0.021

APPENDIX B

MEASUREMENT SYSTEMS PERFORMANCE SPECIFICATIONS

MSI / Manitowoc PU
Manitowoc, WI
No. 8 Boiler Duct
08/08/12
Test 2

SO_2 (TECO Model 43i)

	Cylinder Value (ppm)	Analyzer Response (ppm)	Difference (ppm)	Span Value (ppm)	% of Span
Zero	0.00	0.28	0.28	251.00	0.11
Low Level	117.80	117.90	0.10	251.00	0.04
Mid Level	251.00	251.20	0.20	251.00	0.08

CO_2 (TECO Model 410i)

	Cylinder Value (ppm)	Analyzer Response (ppm)	Difference (ppm)	Span Value (ppm)	% of Span
Zero	0.00	0.03	0.03	17.00	0.18
Mid Level	8.54	8.58	0.04	17.00	0.24
High Level	17.00	17.22	0.22	17.00	1.29

NOx (TECO Model 42i)

	Cylinder Value (ppm)	Analyzer Response (ppm)	Difference (ppm)	Span Value (ppm)	% of Span
Zero	0.00	-0.06	0.06	251.00	0.02
Mid Level	113.70	113.50	0.20	251.00	0.08
High Level	251.00	248.70	2.30	251.00	0.92

O_2 (Servomex Series 1400)

	Cylinder Value (ppm)	Analyzer Response (ppm)	Difference (ppm)	Span Value (ppm)	% of Span
Zero	0.00	0.04	0.04	21.20	0.19
Mid Level	11.03	11.05	0.02	21.20	0.09
High Level	21.20	21.22	0.02	21.20	0.09

CO (TECO 48i)

	Cylinder Value (ppm)	Analyzer Response (ppm)	Difference (ppm)	Span Value (ppm)	% of Span
Zero	0.00	-0.25	0.25	111.60	0.22
Mid Level	50.20	50.35	0.15	111.60	0.13
High Level	111.60	112.84	1.24	111.60	1.11

**** All Calibrations must be within 2% of the span value...

Calibration Error

MSI / Manitowoc PU
Manitowoc, WI
No. 8 Boiler Duct
8/8/2012

O_2

		Initial	Pre-Cal Bias	Final	Post-cal Bias	Avg.	% Drift of Span
1	Zero	0.04	0.00%	0.04	0.00%	**0.04**	**0.00%**
	Upscale	11.05	0.00%	11.07	0.09%	**11.06**	**0.09%**
2	Zero	0.04	0.00%	0.03	-0.05%	**0.04**	**-0.05%**
	Upscale	11.07	0.09%	11.07	0.09%	**11.07**	**0.00%**
3	Zero	0.03	-0.05%	0.03	-0.05%	**0.03**	**0.00%**
	Upscale	11.07	0.09%	11.08	0.14%	**11.08**	**0.05%**
4	Zero	0.03	-0.05%	0.03	-0.05%	**0.03**	**0.00%**
	Upscale	11.08	0.14%	11.05	0.00%	**11.07**	**-0.14%**
5	Zero	0.03	-0.05%	0.02	-0.09%	**0.03**	**-0.05%**
	Upscale	11.05	0.00%	11.04	-0.05%	**11.05**	**-0.05%**
6	Zero	0.02	-0.09%	0.03	-0.05%	**0.03**	**0.05%**
	Upscale	11.04	-0.05%	11.04	-0.05%	**11.04**	**0.00%**
7	Zero	0.03	-0.05%	0.03	-0.05%	**0.03**	**0.00%**
	Upscale	11.04	-0.05%	11.04	-0.05%	**11.04**	**0.00%**
8	Zero	0.03	-0.05%	0.02	-0.09%	**0.03**	**-0.05%**
	Upscale	11.04	-0.05%	11.04	-0.05%	**11.04**	**0.00%**
9	Zero	0.02	-0.09%	0.03	-0.05%	**0.03**	**0.05%**
	Upscale	11.04	-0.05%	11.04	-0.05%	**11.04**	**0.00%**
10	Zero	0.03	-0.05%	0.03	-0.05%	**0.03**	**0.00%**
	Upscale	11.04	-0.05%	11.04	-0.05%	**11.04**	**0.00%**

	Cylinder Value	Analyzer Value
Zero	0.00 %	0.04 %
Upscale	11.03 %	11.05 %
Span	21.20 %	21.2 %

All drift calibrations must be within 3% of the span value.
All bias calibrations must be within 5% of the span value.

MSI / Manitowoc PU
Manitowoc, WI
No. 8 Boiler Duct
8/8/2012

CO_2

		Initial	Pre-Cal Bias	Final	Post-Cal Bias	Avg.	% Drift of Span
1	Zero	0.03	0.00%	0.06	0.18%	**0.05**	**0.18%**
	Upscale	8.58	0.00%	8.61	0.18%	**8.60**	**0.18%**
2	Zero	0.06	0.18%	0.06	0.18%	**0.06**	**0.00%**
	Upscale	8.61	0.18%	8.64	0.35%	**8.63**	**0.18%**
3	Zero	0.06	0.18%	0.07	0.24%	**0.07**	**0.06%**
	Upscale	8.64	0.35%	8.65	0.41%	**8.65**	**0.06%**
4	Zero	0.07	0.24%	0.10	0.41%	**0.09**	**0.18%**
	Upscale	8.65	0.41%	8.66	0.47%	**8.66**	**0.06%**
5	Zero	0.10	0.41%	0.08	0.29%	**0.09**	**-0.12%**
	Upscale	8.66	0.47%	8.64	0.35%	**8.65**	**-0.12%**
6	Zero	0.08	0.29%	0.08	0.29%	**0.08**	**0.00%**
	Upscale	8.64	0.35%	8.67	0.53%	**8.66**	**0.18%**
7	Zero	0.08	0.29%	0.07	0.24%	**0.08**	**-0.06%**
	Upscale	8.67	0.53%	8.62	0.24%	**8.65**	**-0.29%**
8	Zero	0.07	0.24%	0.06	0.18%	**0.07**	**-0.06%**
	Upscale	8.62	0.24%	8.60	0.12%	**8.61**	**-0.12%**
9	Zero	0.06	0.18%	0.06	0.18%	**0.06**	**0.00%**
	Upscale	8.60	0.12%	8.62	0.24%	**8.61**	**0.12%**
10	Zero	0.06	0.18%	0.07	0.24%	**0.07**	**0.06%**
	Upscale	8.62	0.24%	8.61	0.18%	**8.62**	**-0.06%**

	Cylinder Value	Analyzer Response
Zero	0.00 %	0.03 %
Upscale	8.54 %	8.58 %
Span	17.00 %	17 %

All drift calibrations must be within 3% of the span value.
All bias calibrations must be within 5% of the span value.

MSI / Manitowoc PU
Manitowoc, WI
No. 8 Boiler Duct
8/8/2012

Nox

		Initial	Pre-Cal Bias	Final	Post-Cal Bias	Avg.	% Drift of Span
1	Zero	-0.06	0.00%	-0.09	-0.01%	**-0.08**	**-0.01%**
	Upscale	113.50	0.00%	114.40	0.36%	**113.95**	**0.36%**
2	Zero	-0.09	-0.01%	-0.12	-0.02%	**-0.11**	**-0.01%**
	Upscale	114.40	0.36%	115.30	0.72%	**114.85**	**0.36%**
3	Zero	-0.12	-0.02%	-0.06	0.00%	**-0.09**	**0.02%**
	Upscale	115.30	0.72%	115.30	0.72%	**115.30**	**0.00%**
4	Zero	-0.06	0.00%	-0.15	-0.04%	**-0.11**	**-0.04%**
	Upscale	115.30	0.72%	114.40	0.36%	**114.85**	**-0.36%**
5	Zero	-0.15	-0.04%	-0.09	-0.01%	**-0.12**	**0.02%**
	Upscale	114.40	0.36%	114.70	0.48%	**114.55**	**0.12%**
6	Zero	-0.09	-0.01%	-0.03	0.01%	**-0.06**	**0.02%**
	Upscale	114.70	0.48%	114.40	0.36%	**114.55**	**-0.12%**
7	Zero	-0.03	0.01%	-0.06	0.00%	**-0.05**	**-0.01%**
	Upscale	114.40	0.36%	115.10	0.64%	**114.75**	**0.28%**
8	Zero	-0.06	0.00%	-0.03	0.01%	**-0.05**	**0.01%**
	Upscale	115.10	0.64%	114.70	0.48%	**114.90**	**-0.16%**
9	Zero	-0.03	0.01%	-0.09	-0.01%	**-0.06**	**-0.02%**
	Upscale	114.70	0.48%	115.10	0.64%	**114.90**	**0.16%**
10	Zero	-0.09	-0.01%	-0.09	-0.01%	**-0.09**	**0.00%**
	Upscale	115.10	0.64%	115.70	0.88%	**115.40**	**0.24%**

	Cylinder Value	Analyzer Response
Zero	0.00 ppm	-0.06 ppm
Upscale	113.70 ppm	113.50 ppm
Span	251.00 ppm	251.00 ppm

All drift calibrations must be within 3% of the span value.
All bias calibrations must be within 5% of the span value.

MSI / Manitowoc PU
Manitowoc, WI
No. 8 Boiler Duct
8/8/2012

SO_2

		Initial	Pre-Cal Bias	Final	Post-Cal Bias	Avg.	% Drift of Span
1	Zero	0.28	0.00%	-0.03	-0.12%	**0.13**	**-0.12%**
	Upscale	117.90	0.00%	117.60	-0.12%	**117.75**	**-0.12%**
2	Zero	-0.03	-0.12%	-0.03	-0.12%	**-0.03**	**0.00%**
	Upscale	117.60	-0.12%	118.50	0.24%	**118.05**	**0.36%**
3	Zero	-0.03	-0.12%	-0.06	-0.14%	**-0.05**	**-0.01%**
	Upscale	118.50	0.24%	118.20	0.12%	**118.35**	**-0.12%**
4	Zero	-0.06	-0.14%	0.29	0.00%	**0.12**	**0.14%**
	Upscale	118.20	0.12%	118.50	0.24%	**118.35**	**0.12%**
5	Zero	0.29	0.00%	0.06	-0.09%	**0.18**	**-0.09%**
	Upscale	118.50	0.24%	118.80	0.36%	**118.65**	**0.12%**
6	Zero	0.06	-0.09%	0.34	0.02%	**0.20**	**0.11%**
	Upscale	118.80	0.36%	118.20	0.12%	**118.50**	**-0.24%**
7	Zero	0.34	0.02%	0.31	0.01%	**0.33**	**-0.01%**
	Upscale	118.20	0.12%	119.40	0.60%	**118.80**	**0.48%**
8	Zero	0.31	0.01%	0.19	-0.04%	**0.25**	**-0.05%**
	Upscale	119.40	0.60%	118.80	0.36%	**119.10**	**-0.24%**
9	Zero	0.19	-0.04%	0.36	0.03%	**0.28**	**0.07%**
	Upscale	118.80	0.36%	118.50	0.24%	**118.65**	**-0.12%**
10	Zero	0.36	0.03%	0.33	0.02%	**0.35**	**-0.01%**
	Upscale	118.50	0.24%	118.50	0.24%	**118.50**	**0.00%**

	Cylinder Value	Analyzer Response
Zero	0.00 ppm	0.28 ppm
Upscale	117.80 ppm	117.90 ppm
Span	251.00 ppm	251.00 ppm

All drift calibrations must be within 3% of the span value.
All bias calibrations must be within 5% of the span value.

MSI / Manitowoc PU
Manitowoc, WI
No. 8 Boiler Duct
8/8/2012

CO

		Initial	Pre-Cal Bias	Final	Post-Cal Bias	Avg.	% Drift of Span
1	Zero	-0.25	-0.21%	-0.24	-0.21%	**-0.25**	**0.00%**
	Upscale	112.84	-2.02%	113.00	-1.95%	**112.92**	**0.06%**
2	Zero	-0.24	-0.21%	-0.27	-0.22%	**-0.26**	**-0.01%**
	Upscale	113.00	-1.95%	112.70	-2.07%	**112.85**	**-0.12%**
3	Zero	-0.27	-0.22%	-0.21	-0.20%	**-0.24**	**0.02%**
	Upscale	112.70	-2.07%	112.60	-2.11%	**112.65**	**-0.04%**
4	Zero	-0.21	-0.20%	-0.24	-0.21%	**-0.23**	**-0.01%**
	Upscale	112.60	-2.11%	112.60	-2.11%	**112.60**	**0.00%**
5	Zero	-0.24	-0.21%	0.06	-0.09%	**-0.09**	**0.12%**
	Upscale	112.60	-2.11%	111.80	-2.43%	**112.20**	**-0.32%**
6	Zero	0.06	-0.09%	0.03	-0.10%	**0.05**	**-0.01%**
	Upscale	111.80	-2.43%	111.20	-2.67%	**111.50**	**-0.24%**
7	Zero	0.03	-0.10%	0.04	-0.10%	**0.04**	**0.00%**
	Upscale	111.20	-2.67%	111.40	-2.59%	**111.30**	**0.08%**
8	Zero	0.04	-0.10%	0.03	-0.10%	**0.04**	**0.00%**
	Upscale	111.40	-2.59%	110.90	-2.79%	**111.15**	**-0.20%**
9	Zero	0.03	-0.10%	0.06	-0.09%	**0.05**	**0.01%**
	Upscale	110.90	-2.79%	110.90	-2.79%	**110.90**	**0.00%**
10	Zero	0.06	-0.09%	0.00	-0.11%	**0.03**	**-0.02%**
	Upscale	110.90	-2.79%	110.80	-2.83%	**110.85**	**-0.04%**

	Cylinder Value	Analyzer Response
Zero	0.00 ppm	-0.25 ppm
Upscale	111.60 ppm	112.84 ppm
Span	111.60 ppm	111.60 ppm

All drift calibrations must be within 3% of the span value.
All bias calibrations must be within 5% of the span value.

Interpoll Laboratories
(763) 786-6020

Method 20 NO_2 to NO Converter Efficiency Datasheet

Job	MSI / Manitowoc PU
Source	No. 8 Boiler Duct
Date	8/8/2012
Operator	Rory Elynck
Analyzer	TECO Model 42i-LS (NOx)
Analyzer S/N	615216893

Time (min)	NOx Response
5:10 AM	48.53
5:11 AM	48.59
5:12 AM	48.50
5:13 AM	48.51
5:14 AM	48.57
5:15 AM	48.53
5:16 AM	48.44
5:17 AM	48.42
5:18 AM	48.40
5:19 AM	48.51
5:20 AM	48.45
5:21 AM	48.49
5:22 AM	48.53
5:23 AM	48.43
5:24 AM	48.49
5:25 AM	48.60
5:26 AM	48.56
5:27 AM	48.44
5:28 AM	48.50
5:29 AM	48.44
5:30 AM	48.46
5:31 AM	48.57
5:32 AM	48.54
5:33 AM	48.46
5:34 AM	48.52
5:35 AM	48.47
5:36 AM	48.41
5:37 AM	48.41
5:38 AM	48.44
5:39 AM	48.48
Highest Peak Value	48.60
Percent Drift	0.2%
System Pass of Fail	PASS

Instructions: Add mid-level gas to a leak-free Tedlar bag. Dilute the gas with 20.9% Oxygen to approximately 1:1. Then immediately attach the bag to the instrument and record the Nox Reponses for 30 minutes. The system is OK if the response at the end is less than 2.0 % of the highest response.

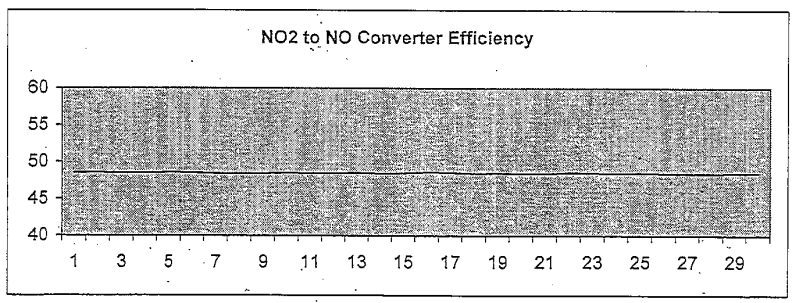

INTERPOLL LABORATORIES, INC.
(763) 786-6020

EPA Appendix A Stratification Test

Job:	MSI / Manitowoc PU	Date:	8/8/2012
Source:	No. 8 Boiler Duct	Personnel:	RE / AS
Test	2	Bar. Press. (in. Hg)	29.38
PDT Number	85 / 138		
Measurement Response Time:	109	seconds	

Stack Diameter 60.00 in. Port Length in. 16.00

Traverse Point	Fraction of Diameter	Distance From Stack Wall (in.)	Distance From End of Port (in.)	SO_2 ppm (wet)	NOx ppm (wet)	O_2 % (dry)	CO_2 % (wet)	Time (min)
1	0.17	10	**26.00**	45.10	73.76	4.86	13.12	7:05
2	0.50	30	**46.00**	60.40	64.63	4.80	13.15	7:12
3	0.83	50	**66.00**	63.31	59.61	4.87	13.10	7:19
Average				**56.27**	**66.00**	**4.84**	**13.13**	
			Largest Value	63.31	73.76	4.87	13.15	
			Smallest Value	45.10	59.61	4.80	13.10	
			%Deviation	40.37%	23.74%	1.40%	0.40%	

* A single sampling point was used for each test run.

MSI / Manitowoc PU
Manitowoc, WI
No. 8 Boiler Duct
8/8/2012

Time	SO_2	Nox	O_2	CO_2
7:05:00	38.46	78.19	4.971	13
7:06:00	41.24	77.63	4.885	13.13
7:07:00	44.14	74.1	4.829	13.12
7:08:00	52.36	72.52	4.785	13.18
7:09:00	44.87	72.4	4.839	13.16
7:10:00	43.21	71.47	4.832	13.14
7:11:00	51.42	69.99	4.873	13.13
Average	**45.10**	**73.76**	**4.86**	**13.12**

Time	SO_2	Nox	O_2	CO_2
7:12:00	54.14	66.74	4.78	13.17
7:13:00	61.13	67.67	4.75	13.20
7:14:00	65.51	64.91	4.802	13.16
7:15:00	59.16	63.81	4.787	13.17
7:16:00	63.18	64.37	4.816	13.12
7:17:00	59.05	62.67	4.865	13.08
7:18:00	60.65	62.23	4.812	13.17
Average	**60.40**	**64.63**	**4.80**	**13.15**

Time	SO_2	Nox	O_2	CO_2
7:19:00	60.23	60.99	4.874	13.12
7:20:00	68.63	60.79	4.809	13.15
7:21:00	66.56	59.39	4.812	13.15
7:22:00	65.38	59.59	4.796	13.18
7:23:00	62.99	58.52	4.876	13.08
7:24:00	57.65	59.38	4.994	12.96
7:25:00	61.7	58.58	4.927	13.06
Average	**63.31**	**59.61**	**4.87**	**13.10**

APPENDIX C

CALIBRATION GAS CERTIFICATION SHEETS

THE LINDE GROUP

Linde

CERTIFICATE OF ANALYSIS

EPA PROTOCOL MIXTURE

PROCEDURE # : G1

PGVP ID#:	I12011	GAS CODE:	SNC
CUSTOMER:	Linde Gas North America Hammond Plar	CYLINDER # :	CC-18392
SALES#:	108231765	CYLINDER PRES:	2000 PSIG
PROD#:	1183589	CYLINDER VALVE:	CGA 660
P.O.# :	4501785436	CYLINDER SIZE:	2A
MATERIAL#:	24089260	CYLINDER MATERIAL:	Aluminum
CERTIFICATION DATE:	13-Jul-2011	GAS VOLUME:	4000 Liter
EXPIRATION DATE:	13-Jul-2013	BLEND TOLERANCE:	5% Relative
		PAGE:	1 of 1

CERTIFICATION HISTORY

COMPONENT	DATE OF ASSAY	MEAN CONCENTRATION	CERTIFIED CONCENTRATION	ANALYTICAL ACCURACY
Carbon Monoxide	06-Jul-2011 13-Jul-2011	50.12 ppm 50.32 ppm	50.2 ppm	+/- 1%
Nitric Oxide	06-Jul-2011 13-Jul-2011	49.99 ppm 49.9 ppm	49.9 ppm	+/- 1%
NOx			49.9 ppm	Reference Value Only
Sulfur Dioxide	06-Jul-2011 13-Jul-2011	50.41 ppm 49.92 ppm	50.2 ppm	+/- 1%

BALANCE Nitrogen

PREVIOUS CERTIFICATION DATES: None

REFERENCE STANDARDS

COMPONENT	SRM/NTRM#	CYLINDER#	CONCENTRATION
Carbon Monoxide	GMIS-1	CC-19898	100.4 ppm
Nitric Oxide	GMIS-1	CC-202746	98.9 ppm
Sulfur Dioxide	NTRM-81694	CC-162819	96.1 ppm

INSTRUMENTATION

COMPONENT	MAKE/MODEL	SERIAL #	DETECTOR	CALIBRATION DATE(S)
Carbon Monoxide	Horiba VIA-510	H0002L2Y	NDIR	27-Jun-2011
Nitric Oxide	CAI 400-CLD	6L09004	Chemi	28-Jun-2011
Sulfur Dioxide	Horiba VIA-510	851221093	NDIR	21-Jun-2011

THIS STANDARD IS NIST TRACEABLE. IT WAS CERTIFIED ACCORDING TO THE EPA PROTOCOL PROCEDURES.
DO NOT USE THIS STANDARD IF THE CYLINDER PRESSURE IS LESS THAN 150 PSIG.

ANALYST: Justin Kutz JUSTIN KUTZ

Linde Gas North America LLC

DATE: 13-Jul-2011

(908) 329-9700 Main (908) 329-9740 Fax
www.Lindeus.com

MPU00926

THE LINDE GROUP

CERTIFICATE OF ANALYSIS

EPA PROTOCOL MIXTURE

PROCEDURE # : G1

PGVP ID#:	I12012	GAS CODE:	SNC
CUSTOMER:	HAMMOND	CYLINDER # :	CC-127409
SALES#:	501103829	CYLINDER PRES:	2000 PSIG
PROD#:	1218583	CYLINDER VALVE:	CGA 660
P.O.# :	4501103829	CYLINDER SIZE:	2A
MATERIAL#:	24086350	CYLINDER MATERIAL:	Aluminum
CERTIFICATION DATE:	11-Jun-2012	GAS VOLUME:	4000 Liter
EXPIRATION DATE:	11-Jun-2014	BLEND TOLERANCE:	5% Relative
		PAGE:	1 of 1

CERTIFICATION HISTORY

COMPONENT	DATE OF ASSAY	MEAN CONCENTRATION	CERTIFIED CONCENTRATION	ANALYTICAL ACCURACY
Carbon Monoxide	31-May-2012 11-Jun-2012	111.3 ppm 112.0 ppm	111.6 ppm	+/- 1%
Nitric Oxide	04-Jun-2012 11-Jun-2012	113.8 ppm 113.5 ppm	113.7 ppm	+/- 1%
NOx			113.7 ppm	Reference Value Only
Sulfur Dioxide	04-Jun-2012 11-Jun-2012	117.6 ppm 118.0 ppm	117.8 ppm	+/- 1%

BALANCE Nitrogen

PREVIOUS CERTIFICATION DATES: None

REFERENCE STANDARDS

COMPONENT	SRM/NTRM#	CYLINDER#	CONCENTRATION
Carbon Monoxide	GMIS-1	cc-279053	500 ppm
Nitric Oxide	GMIS-1	CC-143752	254 ppm
Sulfur Dioxide	GMIS-1	CC-118364	355 ppm

INSTRUMENTATION

COMPONENT	MAKE/MODEL	SERIAL #	DETECTOR	CALIBRATION DATE(S)
Carbon Monoxide	Horiba VIA-510	570423011	NDIR	01-Jun-2012
Nitric Oxide	CAI 400-CLD	6L09004	Cheml	24-May-2012
Sulfur Dioxide	Horiba VIA-510	851221093	NDIR	04-Jun-2012

THIS STANDARD IS NIST TRACEABLE. IT WAS CERTIFIED ACCORDING TO THE EPA PROTOCOL PROCEDURES.
DO NOT USE THIS STANDARD IF THE CYLINDER PRESSURE IS LESS THAN 150 PSIG.

ANALYST: JUSTIN KUTZ Linde Gas North America LLC DATE: 11-Jun-2012

(908) 329-9700 Main (908) 329-9740 Fax
www.Lindeus.com

CERTIFICATE OF ANALYSIS

EPA PROTOCOL MIXTURE

PROCEDURE # : G1

PGVP ID#:	I12012	GAS CODE:	OC2
CUSTOMER:	HAMMOND	CYLINDER # :	CC-106969
SALES#:	501117489	CYLINDER PRES:	2000 PSIG
PROD#:	1222894	CYLINDER VALVE:	CGA 590
P.O.# :	4501117489	CYLINDER SIZE:	2A
MATERIAL#:	24086339	CYLINDER MATERIAL:	Aluminum
CERTIFICATION DATE:	12-Jul-2012	GAS VOLUME:	4000 Liter
EXPIRATION DATE:	12-Jul-2015	BLEND TOLERANCE:	5% Relative
		PAGE:	1 of 1

CERTIFICATION HISTORY

COMPONENT	DATE OF ASSAY	MEAN CONCENTRATION	CERTIFIED CONCENTRATION	ANALYTICAL ACCURACY
Carbon Dioxide	12-Jul-2012	8.54 %	8.54 %	+/- 1%
Oxygen	12-Jul-2012	11.03 %	11.03 %	+/- 1%

BALANCE Nitrogen

PREVIOUS CERTIFICATION DATES: None

REFERENCE STANDARDS

COMPONENT	SRM/NTRM#	CYLINDER#	CONCENTRATION
Carbon Dioxide	GMIS-1	CC-109878	9.98 %
Oxygen	NTRM-82659Y	cc-237244	24.52 %

INSTRUMENTATION

COMPONENT	MAKE/MODEL	SERIAL #	DETECTOR	CALIBRATION DATE(S)
Carbon Dioxide	CAI-300	S03001	NDIR	10-Jul-2012
Oxygen	CAI-300	S03001	PM	28-Jun-2012

THIS STANDARD IS NIST TRACEABLE. IT WAS CERTIFIED ACCORDING TO THE EPA PROTOCOL PROCEDURES.
DO NOT USE THIS STANDARD IF THE CYLINDER PRESSURE IS LESS THAN 150 PSIG.

ANALYST: MATTHEW JACKSON Linde Gas North America LLC DATE: 12-Jul-2012

(908) 329-9700 Main (908) 329-9740 Fax
www.Lindeus.com

THE LINDE GROUP

CERTIFICATE OF ANALYSIS

EPA PROTOCOL MIXTURE

PROCEDURE # : G1

PGVP ID#:	I12011	GAS CODE:	OC2
CUSTOMER:	Linde Hammond Plant	CYLINDER # :	CC-75412
SALES#:	108158693	CYLINDER PRES:	2000 PSIG
PROD#:	1180101	CYLINDER VALVE:	CGA 590
P.O.# :	4501778098	CYLINDER SIZE:	2A
MATERIAL#:	24090596	CYLINDER MATERIAL:	Aluminum
CERTIFICATION DATE:	03-Jun-2011	GAS VOLUME:	4000 Liter
EXPIRATION DATE:	03-Jun-2014	BLEND TOLERANCE:	5% Relative
		PAGE:	1 of 1

CERTIFICATION HISTORY

COMPONENT	DATE OF ASSAY	MEAN CONCENTRATION	CERTIFIED CONCENTRATION	ANALYTICAL ACCURACY
Carbon Dioxide	03-Jun-2011	17.00 %	17.00 %	+/- 1%
Oxygen	03-Jun-2011	21.2 %	21.2 %	+/- 1%

BALANCE Nitrogen

PREVIOUS CERTIFICATION DATES: None

REFERENCE STANDARDS

COMPONENT	SRM/NTRM#	CYLINDER#	CONCENTRATION
Carbon Dioxide	NTRM-981004	CC-79852	20.00 %
Oxygen	NTRM-82659X	CC-83903	22.80 %

INSTRUMENTATION

COMPONENT	MAKE/MODEL	SERIAL #	DETECTOR	CALIBRATION DATE(S)
Carbon Dioxide	CAI-300	S03001	NDIR	12-May-2011
Oxygen	CAI 300	S03001	PM	13-May-2011

THIS STANDARD IS NIST TRACEABLE. IT WAS CERTIFIED ACCORDING TO THE EPA PROTOCOL PROCEDURES.
DO NOT USE THIS STANDARD IF THE CYLINDER PRESSURE IS LESS THAN 150 PSIG.

ANALYST: MATTHEW JACKSON

Linde Gas North America LLC

DATE: 03-Jun-2011

(908) 329-9700 Main (908) 329-9740 Fax
www.Lindeus.com

20503

MPU00929

Linde SPECTRA Environmental Gases, 80 Industrial Drive, Alpha, NJ 08865

THE LINDE GROUP

Linde

CERTIFICATE OF ANALYSIS

EPA PROTOCOL MIXTURE

PROCEDURE # : G1

PGVP ID#:	I12011	GAS CODE:	SNC
CUSTOMER:	LINDE GAS NORTH AMERICA	CYLINDER # :	CC-131154
SALES#:	108553301	CYLINDER PRES:	2000 PSIG
PROD#:	1199023	CYLINDER VALVE:	CGA 660
P.O.# :	4501795868	CYLINDER SIZE:	2A
MATERIAL#:	24089260	CYLINDER MATERIAL:	Aluminum
CERTIFICATION DATE:	05-Dec-2011	GAS VOLUME:	4000 Liter
EXPIRATION DATE:	05-Dec-2013	BLEND TOLERANCE:	5% Relative
		PAGE:	1 of 1

CERTIFICATION HISTORY

COMPONENT	DATE OF ASSAY	MEAN CONCENTRATION	CERTIFIED CONCENTRATION	ANALYTICAL ACCURACY
Nitric Oxide	28-Nov-2011 05-Dec-2011	250.7 ppm 251.0 ppm	251 ppm	+/- 1%
NOx			251 ppm	Reference Value Only
Sulfur Dioxide	28-Nov-2011 05-Dec-2011	251.2 ppm 251.2 ppm	251 ppm	+/- 1%
Carbon Monoxide	28-Nov-2011 05-Dec-2011	252.9 ppm 252.5 ppm	253 ppm	+/- 1%

BALANCE Nitrogen

PREVIOUS CERTIFICATION DATES: None

REFERENCE STANDARDS

COMPONENT	SRM/NTRM#	CYLINDER#	CONCENTRATION
Nitric Oxide	GMIS-1	CC-143752	254 ppm
Sulfur Dioxide	GMIS-1	CC-197153	493 ppm
Carbon Monoxide	GMIS-1	CC-118482	502 ppm

INSTRUMENTATION

COMPONENT	MAKE/MODEL	SERIAL #	DETECTOR	CALIBRATION DATE(S)
Nitric Oxide	CAI 400-CLD	6L09004	Chemi	14-Nov-2011
Sulfur Dioxide	Horiba VIA-510	851221093	NDIR	15-Nov-2011
Carbon Monoxide	Horiba VIA-510	570423011	NDIR	07-Nov-2011

THIS STANDARD IS NIST TRACEABLE. IT WAS CERTIFIED ACCORDING TO THE EPA PROTOCOL PROCEDURES.
DO NOT USE THIS STANDARD IF THE CYLINDER PRESSURE IS LESS THAN 150 PSIG.

ANALYST: MATTHEW JACKSON

Linde Gas North America LLC

DATE: 05-Dec-2011

(908) 329-9700 Main (908) 329-9740 Fax
www.Lindeus.com

MPU00930

APPENDIX D

GAS ANALYZER SPECIFICATIONS

NO_2, and NO_x concentrations to the front panel display, the analog outputs, and also makes the data available over the serial or ethernet connection.

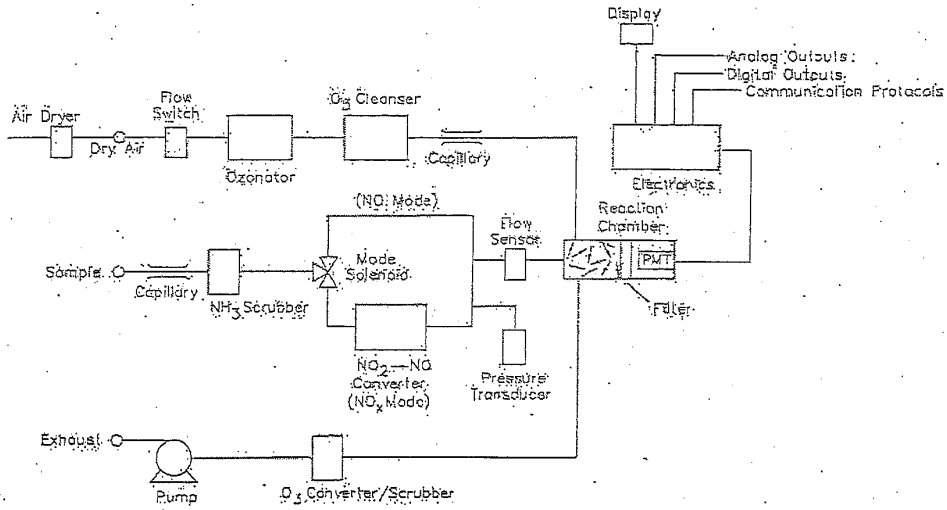

Figure 1-1. Model 42*i* Low Source Flow Schematic

Specifications

Table 1-1. Model 42*i* Low Source Specifications

Preset ranges	0-0.2, 0.5, 1, 2, 5, 10, 20, 50, 100 ppm 0-0.5, 1, 2, 5, 10, 20, 50, 100, 150 mg/m^3
Extended ranges	0-1, 2, 5, 10, 20, 50, 100, 200, 500 ppm 0-2, 5, 10, 20, 50, 100, 200, 500, 750 mg/m^3
Custom ranges	0-0.2 to 100 ppm (0-1 to 500 ppm in extended ranges) 0-0.5 to 150 mg/m^3 (0-2 to 750 mg/m^3 in extended ranges)
Zero noise	0.005 ppm RMS (60 second averaging time)
Lower detectable limit	0.01 ppm (60 second averaging time)
Zero drift (24 hour)	≈ 0.005 ppm
Span drift (24 hour)	± 1% full-scale
Response time (NO/NO_x mode)	15 sec (10 second averaging time) 85 sec (60 second averaging time) 305 sec (300 second averaging time)

MPU00932

Response time (NO mode)	15 sec (10 second averaging time) 65 sec (60 second averaging time) 305 sec (300 second averaging time)
Linearity	± 1% full-scale
Sample flow rate	≈ 25 cc/min. measured at atmospheric pressure
Operating temperature	15–35 °C (may be safely operated over the range of 0–45 °C)*
Power requirements	100 VAC @ 50/60 Hz 115 VAC @ 50/60 Hz 220–240 VAC @ 50/60 Hz 300 watts
Physical dimensions	16.75" (W) X 8.62" (H) X 23" (D)
Weight	Approximately 55 lbs.
Analog outputs	6 voltage outputs; 0–100 mV, 1 V, 5 V, 10 V (User selectable), 5% of full-scale over/under range; 12 bit resolution, user selectable for measurement input
Digital outputs	1 power fail relay Form C, 10 digital relays Form A, user selectable alarm output, relay logic, 100 mA @ 200 VDC
Digital inputs	16 digital inputs, user select programmable, TTL level, pulled high
Serial Ports	1 RS-232 or RS-485 with two connectors, baud rate 1200–115200, data bits, parity, and stop bits, protocols: C-Link, MODBUS, and streaming data (all user selectable)
Ethernet connection	RJ45 connector for 10Mbs Ethernet connection, static or dynamic TCP/IP addressing

* In non condensing environments. Performance specifications based on operation in 15–35 °C range.

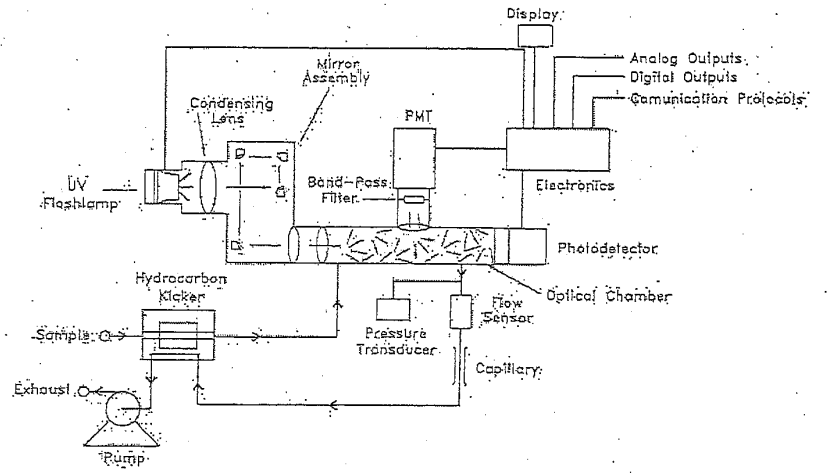

Figure 1-1. Model 43*i* Flow Schematic

Specifications

Table 1-1. Model 43*i* Specifications

Preset ranges	0-0.05, 0.1, 0.2, 0.5, 1, 2, 5, 10 ppm 0-0.2, 0.5, 1, 2, 5, 10, 20, 25 mg/m^3
Extended ranges	0-0.5, 1, 2, 5, 10, 20, 50, 100 ppm 0-2, 5, 10, 20, 50, 100, 200, 250 mg/m^3
Custom ranges:	0-0.05 to 10 ppm (0-0.5 to 100 ppm in extended range) 0-0.2 to 25 mg/m^3 (0-2 to 250 mg/m^3 in extended range)
Zero noise	1.0 ppb RMS (10 second averaging time) 0.5 ppb RMS (60 second averaging time) 0.25 ppb RMS (300 second averaging time)
Lower detectable limit	2.0 ppb (10 second averaging time) 1.0 ppb (60 second averaging time) 0.5 ppb (300 second averaging time)
Zero drift (24 hour)	<1 ppb
Span drift	± 1% full-scale
Response time (in automatic mode)	80 sec (10 second averaging time) 110 sec (60 second averaging time) 320 sec (300 second averaging time)
Linearity	± 1% of full-scale

Sample flow rate	0.5 LPM (standard) 1 LPM (optional)
Interferences (tested at levels specified by EPA)	less than lower detectable limit except for the following: NO: < 3 ppb, tested at 500 ppb M-Xylene: tested at 200 ppb H_2O: tested at 2% of reading
Operating temperature	20–30 °C (may be safely operated over the range of 0–45 °C)*
Power requirements	100 VAC @ 50/60 Hz 115 VAC @ 50/60 Hz 220-240 VAC @ 50/60 Hz 165 watts
Physical dimensions	16.75" (W) X 8.62" (H) X 23" (D)
Weight	Approximately 48 lbs.
Analog outputs	6 voltage outputs; 0–100 mV, 1, 5, 10 V (user selectable), 5% of full-scale over/under range, 12 bit resolution, user selectable for measurement input
Digital outputs	1 power fail relay Form C, 10 digital relays Form A, user selectable alarm output, relay logic, 100 mA @ 200 VDC
Digital inputs	16 digital inputs, user select programmable; TTL level, pulled high
Serial Ports	1 RS-232 or RS-485 with two connectors, baud rate 1200–115200, data bits, parity, and stop bits, protocols: C-Link, MODBUS, and streaming data (all user selectable)
Ethernet connection	RJ45 connector for 10Mbs Ethernet connection, static or dynamic TCP/IP addressing

*In non condensing environments. Performance specifications based on operation within 20–30 °C range.

Table 1-2. Model 43*i* Optional Permeation Oven Specifications

Temperature control	Single Point 45 °C
Temperature stability	± 0.1 °C
Warm-up time	1 hour (permeation device can take 24 to 48 hours to stabilize)
Carrier gas flow	≈ 70 scc/min
Chamber size	Accepts permeation tubes up to 9 cm in total length; 1 cm in diameter
Temperature range	20–30 °C
Physical dimensions	Contained inside the Model 43*i*
Power requirements	120 VAC @ 50/60 Hz, 50 watts (in addition to the standard Model 43*i*)
Weight	Approximatedly 5 lbs. (in addition to the standard Model 43*i*)

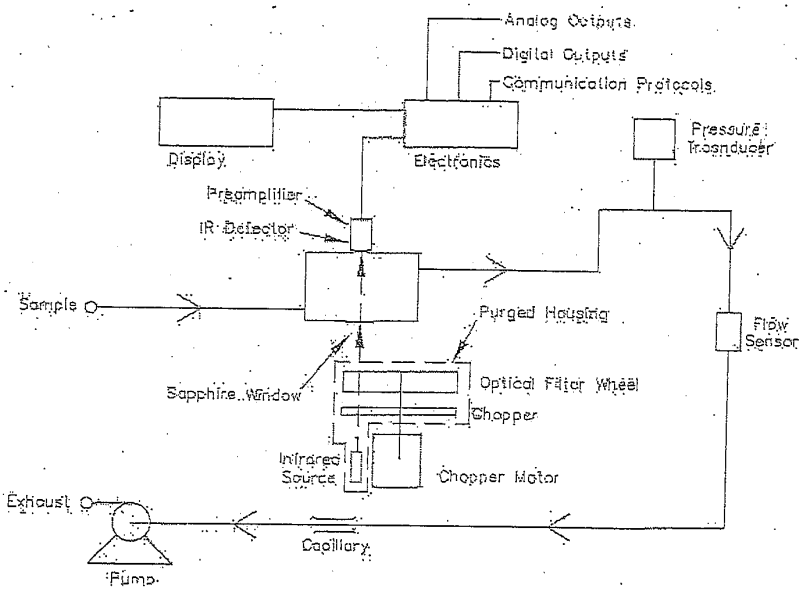

Figure 1-1. Model 410*i* Flow Schematic

Specifications

Table 1-1. Model 410*i* Specifications CO_2

Preset ranges	Standard: 0-200, 500, 1000, 2000, 5000, 10000 ppm High Level: 0-0.5, 1, 2, 5, 10, 20, 25%
Custom ranges	Standard: 0-200 to 10000 ppm High Level: 0-0.5 to 25%
Zero noise	Standard: 0.5 ppm RMS (60 second averaging time) High Level: 20 ppm RMS (60 second averaging time)
Minimum detectable limit	Standard: 1 ppm High Level: 40 ppm
Zero drift (24 hour)	± 1.0 ppm
Span drift (24 hour)	± 2% span concentration
Response time	90 seconds (30 second averaging time)
Linearity	± 1.5% of span (at concentrations of 10 to 100% of span)
Sample flow rate	1.0 LPM
Operating temperature	5–45 °C

MPU00936

Power requirements	100 VAC @ 50/60 Hz 115 VAC @ 50/60 Hz 220–240 VAC @ 50/60 Hz 275 watts
Physical dimensions	16.75" (W) X 8.62" (H) X 23" (D)
Weight	Approximately 39 lbs.
Analog outputs	6 voltage outputs; 0–100 mV, 1, 5, 10 V (User selectable), 5% of full-scale over/under range, 12 bit resolution, user selectable for measurement input
Digital outputs	1 power fail relay Form C, 10 digital relays Form A, user selectable alarm output; relay logic, 100 mA @ 200 VDC
Digital inputs	16 digital inputs, user select programmable; TTL level, pulled high
Serial Ports	1 RS-232 or RS-485 with two connectors, baud rate 1200–115200, Protocols: C-Link, MODBUS, and streaming data (all user selectable)
Ethernet connection	RJ45 connector for 10Mbs Ethernet connection, static or dynamic TCP/IP addressing

MODEL 1420 SERVOMEX PARAMAGNETIC O_2 ANALYZER SPECIFICATIONS

Repeatability:	Better than ± 0.2% O2 under constant conditions
Drift	Less than 0.2% O2 per week under constant conditions. (Excluding variation due to barometric pressure changes; reading is proportional to barometric pressure
Outputs	
Display	3 ½ digit LCD reading 0.0 to 100.0% oxygen with over range capability
Output	0 to 1V (non-isolated) for 0 to 100% oxygen available on 'D' type connector located on the back panel of the instrument. Output impedance is less than 10 ohms.
Option	4 – 20mA isolated, Max impedance 500 ohms
Flow alarm output	Change over relay contact rated at 3A/115V ac, 1A/240V ac or 1A/28V dc. 4 sets of single pole changeover contacts. Alarm becomes active when sample gas flow through the analyzer fails
Sample Requirements	
Condition	Clean, dry gas with dew point 5 deg C below ambient temperature
Inlet pressure	0.5 to 3 psig (3.5 to 21kPa). Inlet pressure changes within this range will change the reading by less than 0.1% O2. May be operated up to 10 psig (70kPa) with degraded stability
Flow rate	1.5 to 6 litres/minute approximately depending on sample pressure
Filtering	0.6 micron replaceable filter integral to the automatic flow control device.
Response time	Less than 15 secs. To 90% at an inlet pressure of 3 psig (21kPa)
Inlet/vent connections	¼ inch OD tube (stainless steel) suitable for 6mm ID flexible tubing or ¼ inch OD compression fittings.

Z:\Word\Methods\Analyzer Specs\Dilution Trailer\Servomex O2.doc

MPU00938

Materials exposed to the sample	Stainless steel, Pyrex glass, brass, platinum, epoxy resin, viton, polypropylene and glass fibre filter
<u>Physical Characteristics</u>	
Case	Steel and aluminum finished in epoxy powder paint
Case Classification	IP 20 (IEC 529) when fitted into the Servomex 1400 series 19 inch case
Weight	10Kg (22 lb) approximately
<u>Electrical</u>	
AC Supply	110 to 120V AC or 220 to 240V AC, ±10%, 48 to 62Hz. Voltage selected by a voltage selector integral to the IEC supply plug
Power required	15VA maximum

APPENDIX E

CEM INSTRUMENT INFORMATION SHEET

INTERPOLL LABORATORIES, INC.
(763) 786-6020

CEM Relative Accuracy Certification Instrument Information Sheet

Plant Name: MPU

Pollutant Gas Monitor Data:

Vendor: THERMO ELECTRON CORP.

Model: 43 I SO2 S/N 43i05105 11566

CEM Location: B9 SHECTER

Gas (es): ☒ SO2 ☐ NOx ☐ CO

Type of System: ☐ In-Situ ☐ Dry-Extractive ☒ Dilution

Installation Date: 8-15-2005

Start-Up Date:

INITIAL CERT. 08-31-2005

Data Recording System:

☐ Strip Chart Recorder ☒ Data Logger System

☒ Computer

Relative Accuracy Certification Units:

☐ ppm, dry ☐ LB/106BTU by O2 F-Factor

☐ ppm, wet ☒ LB/106BTU by CO2 F-Factor

Span Value (ppm):

SO2 500

NOx

CO

Tom Reed

Signature of Person Responsible for Data

Plant Location: UNIT 8

Diluent Monitor Data:

Vendor: THERMO ENVIRONMENTAL

Model: 410i CO2 S/N 410i05705 11585

CEM Location: B9 SHECTER

Gas: ☐ O2 ☒ CO2

Type of System: ☐ In-Situ ☐ Dry-Extractive ☒ Dilution

Instillation Date: 8-15-2005

Start-Up Date:

INITIAL CERT. 08-31-2005

Data Recording System:

☐ Strip Chart Recorder ☒ Data Logger System

☒ Computer

Output Units:

☐ %O2, dry ☐ % CO2, dry

☐ %O2, wet ☒ % CO2, wet

Span Gas Values (% v/v):

	*********Oxygen********	***Carbon Dioxide***
Low		0
High		20.00

10-17-07

Date

MPU00941

INTERPOLL LABORATORIES, INC.
(763) 786-6020

CEM Relative Accuracy Certification Instrument Information Sheet

Plant Name: MPU

Pollutant Gas Monitor Data:

Vendor: THERMO ELECTRON CORP.

Model: 42 I NOx S/N 42i-05105 11562

CEM Location: B9 SHELTER

Gas (es): ☐ SO2 ☒ NOx ☐ CO

Type of System: ☐ In-Situ ☐ Dry-Extractive ☒ Dilution

Installation Date: 8-15-2005

Start-Up Date:

INITIAL CERT: 08-31-2005

Data Recording System:

☐ Strip Chart Recorder ☒ Data Logger System

☒ Computer

Relative Accuracy Certification Units:

☐ ppm, dry ☐ LB/106BTU by O2 F-Factor

☐ ppm, wet ☒ LB/106BTU by CO2 F-Factor

Span Value (ppm):

SO2

NOx 200

CO

Tony Reed

Signature of Person Responsible for Data

Plant Location: UNIT 8

Diluent Monitor Data: SEE UNIT SO2 FORM

Vendor:

Model: S/N

CEM Location:

Gas: ☐ O2 ☐ CO2

Type of System: ☐ In-Situ ☐ Dry-Extractive ☐ Dilution

Installation Date:

Start-Up Date:

Data Recording System:

☐ Strip Chart Recorder ☐ Data Logger System

☐ Computer

Output Units:

☐ %O2, dry ☐ % CO2, dry

☐ %O2, wet ☐ % CO2, wet

Span Gas Values (% v/v):

*********Oxygen******** ***Carbon Dioxide***

Low

High

10-17-07

Date

MPU00942

APPENDIX F

CEM COMPUTER PRINTOUTS

Run # 1

Average Data

Plant: Manitowoc Public Utilities
Interval: 1 Minute
Type: Roll with BAF Applied
Report Period: 08/08/2012 07:05 Through 08/08/2012 07:25
Time Online Criteria: 1 minute(s)

Source	B8								S20	
Parameter (Unit)	B8CO#M (#/MMBTU)	B8CPCO2 (PERCENT)	B8CPNOX (PPM)	B8CPSO2 (PPM)	B8FFACT (MMBTU/CF)	B8NOX#M (MMBTU/HR)	B8PCO (PPM)	B8SO2#M (#/MMBTU)	B8FFACT (MMBTU/CF)	S20STEAM (KLBS/HR)
08/08/12 07:05	0.015	13.1	77.0	37.9	1,805.0	0.127	14.9	0.087	1,805.0	181
08/08/12 07:06	0.016	13.2	73.5	37.9	1,805.0	0.120	16.1	0.086	1,805.0	181
08/08/12 07:07	0.015	13.2	71.6	41.3	1,805.0	0.117	15.4	0.094	1,805.0	182
08/08/12 07:08	0.014	13.3	69.4	44.7	1,805.0	0.112	14.3	0.101	1,805.0	182
08/08/12 07:09	0.015	13.2	68.9	50.6	1,805.0	0.112	14.9	0.115	1,805.0	183
08/08/12 07:10	0.015	13.3	67.3	42.3	1,805.0	0.109	14.8	0.095	1,805.0	187
08/08/12 07:11	0.014	13.2	66.3	43.1	1,805.0	0.108	13.8	0.098	1,805.0	187
08/08/12 07:12	0.014	13.2	64.4	51.8	1,805.0	0.105	13.7	0.118	1,805.0	188
08/08/12 07:13	0.016	13.3	62.7	53.4	1,805.0	0.102	15.7	0.120	1,805.0	188
08/08/12 07:14	0.015	13.3	63.0	61.2	1,805.0	0.102	15.7	0.138	1,805.0	192
08/08/12 07:15	0.013	13.2	60.2	61.9	1,805.0	0.098	13.2	0.141	1,805.0	193
08/08/12 07:16	0.013	13.2	59.9	58.5	1,805.0	0.098	13.3	0.133	1,805.0	193
08/08/12 07:17	0.016	13.2	59.5	60.1	1,805.0	0.097	15.8	0.136	1,805.0	189
08/08/12 07:18	0.016	13.2	58.3	57.0	1,805.0	0.095	16.6	0.129	1,805.0	187
08/08/12 07:19	0.014	13.2	57.2	59.1	1,805.0	0.093	14.5	0.134	1,805.0	191
08/08/12 07:20	0.014	13.2	56.8	59.6	1,805.0	0.093	14.5	0.135	1,805.0	192
08/08/12 07:21	0.016	13.3	55.7	66.7	1,805.0	0.090	16.4	0.150	1,805.0	189
08/08/12 07:22	0.015	13.3	55.4	65.0	1,805.0	0.090	14.9	0.146	1,805.0	188
08/08/12 07:23	0.015	13.2	55.0	62.5	1,805.0	0.090	15.3	0.142	1,805.0	188
08/08/12 07:24	0.015	13.1	54.9	60.8	1,805.0	0.090	15.4	0.139	1,805.0	188
08/08/12 07:25	0.017	13.1	54.4	56.5	1,805.0	0.089	16.6	0.129	1,805.0	190
Average	0.015	13.2	62.4	53.9	1,805.0	0.102	15.0	0.122	1,805.0	188
Minimum	0.013	13.1	54.4	37.9	1,805.0	0.089	13.2	0.086	1,805.0	181
Maximum	0.017	13.3	77.0	66.7	1,805.0	0.127	16.6	0.150	1,805.0	193
Summation	0.313	277.5	1,311.4	1,131.9	37,905.0	2.137	315.8	2.566	37,905.0	3,939
Included Data	21	21	21	21	21	21	21	21	21	21
Total number of	21	21	21	21	21	21	21	21	21	21

F = Unit Offline E = Exceedance
I = Invalid M = Maintenance
Report Generated: 08/08/12 07:46

C = Calibration S = Substituted
T = Out Of Control * = Suspect
Report Version 3.1.1130 STAC

Run # 2

Average Data

Plant: Manitowoc Public Utilities
Interval: 1 Minute
Type: Roll with BAF Applied
Report Period: 08/08/2012 07:40 Through 08/08/2012 08:00
Time Online Criteria: 1 minute(s)

Source	B8								S20	
Parameter (Unit)	B8CO#M (#/MMBTU)	B8CPCO2 (PERCENT)	B8CPNOX (PPM)	B8CPSO2 (PPM)	B8FFACT (MMBTU/CF)	B8NOX#M (MMBTU/HR)	B8PCO (PPM)	B8SO2#M (#/MMBTU)	B8FFACT (MMBTU/CF)	S20STEAM (KLBS/HR)
08/08/12 07:40	0.015	13.1	45.9	70.1	1,805.0	0.076	15.0	0.160	1,805.0	187
08/08/12 07:41	0.015	13.1	44.7	70.1	1,805.0	0.074	15.3	0.160	1,805.0	193
08/08/12 07:42	0.016	13.1	43.8	73.1	1,805.0	0.072	16.3	0.167	1,805.0	193
08/08/12 07:43	0.018	13.1	44.0	71.3	1,805.0	0.072	18.4	0.163	1,805.0	191
08/08/12 07:44	0.017	13.1	44.1	77.8	1,805.0	0.073	17.5	0.178	1,805.0	188
08/08/12 07:45	0.018	13.1	43.6	71.4	1,805.0	0.072	17.7	0.163	1,805.0	188
08/08/12 07:46	0.018	13.1	44.5	70.7	1,805.0	0.073	18.4	0.162	1,805.0	191
08/08/12 07:47	0.018	13.1	43.8	73.9	1,805.0	0.072	18.5	0.169	1,805.0	191
08/08/12 07:48	0.018	13.2	41.3	76.6	1,805.0	0.067	17.9	0.174	1,805.0	191
08/08/12 07:49	0.016	13.3	41.0	81.5	1,805.0	0.066	16.4	0.184	1,805.0	189
08/08/12 07:50	0.015	13.3	40.3	77.7	1,805.0	0.065	15.3	0.175	1,805.0	188
08/08/12 07:51	0.014	13.4	39.0	82.8	1,805.0	0.063	14.6	0.185	1,805.0	188
08/08/12 07:52	0.014	13.4	39.8	85.5	1,805.0	0.064	14.7	0.191	1,805.0	188
08/08/12 07:53	0.015	13.3	40.7	79.1	1,805.0	0.066	15.4	0.178	1,805.0	189
08/08/12 07:54	0.014	13.3	42.0	82.0	1,805.0	0.068	13.7	0.185	1,805.0	189
08/08/12 07:55	0.016	13.2	41.8	89.3	1,805.0	0.068	15.8	0.203	1,805.0	190
08/08/12 07:56	0.015	13.3	41.6	82.0	1,805.0	0.067	15.4	0.185	1,805.0	190
08/08/12 07:57	0.015	13.3	41.6	87.9	1,805.0	0.067	15.4	0.198	1,805.0	190
08/08/12 07:58	0.017	13.2	39.9	81.5	1,805.0	0.065	16.9	0.185	1,805.0	190
08/08/12 07:59	0.017	13.2	39.1	85.9	1,805.0	0.064	17.3	0.195	1,805.0	190
08/08/12 08:00	0.017	13.2	39.7	83.1	1,805.0	0.065	16.9	0.189	1,805.0	190
Average	0.016	13.2	42.0	78.7	1,805.0	0.069	16.3	0.179	1,805.0	190
Minimum	0.014	13.1	39.0	70.1	1,805.0	0.063	13.7	0.160	1,805.0	187
Maximum	0.018	13.4	45.9	89.3	1,805.0	0.076	18.5	0.203	1,805.0	193
Summation	0.338	277.4	882.2	1,653.3	37,905.0	1.439	342.8	3.749	37,905.0	3,984
Included Data	21	21	21	21	21	21	21	21	21	21
Total number of	21	21	21	21	21	21	21	21	21	21

2

F = Unit Offline E = Exceedance
I = Invalid M = Maintenance
Report Generated: 08/08/12 08:13

C = Calibration S = Substituted
T = Out Of Control * = Suspect
Report Version 3.1.1130 STAC

MPU00945

Run #

Average Data

Plant: Manitowoc Public Utilities
Interval: 1 Minute
Type: Roll with BAF Applied
Report Period: 08/08/2012 08:10 Through 08/08/2012 08:30
Time Online Criteria: 1 minute(s)

Source	B8								S20	
Parameter (Unit)	B8CO#M (#/MMBTU)	B8CPCO2 (PERCENT)	B8CPNOX (PPM)	B8CPSO2 (PPM)	B8FFACT (MMBTU/CF)	B8NOX#M (MMBTU/HR)	B8PCO (PPM)	B8SO2#M (#/MMBTU)	B8FFACT (MMBTU/CF)	S20STEAM (KLBS/HR)
08/08/12 08:10	0.016	13.3	38.9	91.1	1,805.0	0.063	16.0	0.205	1,805.0	190
08/08/12 08:11	0.016	13.3	39.2	86.3	1,805.0	0.064	16.2	0.194	1,805.0	190
08/08/12 08:12	0.016	13.3	38.9	92.0	1,805.0	0.063	16.4	0.207	1,805.0	190
08/08/12 08:13	0.016	13.3	38.6	83.8	1,805.0	0.063	16.1	0.189	1,805.0	188
08/08/12 08:14	0.015	13.3	38.6	89.9	1,805.0	0.063	15.5	0.203	1,805.0	188
08/08/12 08:15	0.014	13.4	37.9	90.6	1,805.0	0.061	14.7	0.203	1,805.0	191
08/08/12 08:16	0.016	13.3	36.7	90.7	1,805.0	0.059	16.4	0.204	1,805.0	192
08/08/12 08:17	0.017	13.4	38.1	111.5	1,805.0	0.061	17.6	0.249	1,805.0	188
08/08/12 08:18	0.016	13.3	39.9	97.5	1,805.0	0.065	16.6	0.220	1,805.0	188
08/08/12 08:19	0.016	13.4	38.4	100.6	1,805.0	0.062	16.7	0.225	1,805.0	188
08/08/12 08:20	0.018	13.4	37.1	100.6	1,805.0	0.060	18.7	0.225	1,805.0	190
08/08/12 08:21	0.016	13.3	37.3	98.1	1,805.0	0.060	16.2	0.221	1,805.0	189
08/08/12 08:22	0.016	13.3	37.8	103.0	1,805.0	0.061	16.2	0.232	1,805.0	190
08/08/12 08:23	0.017	13.3	37.0	103.1	1,805.0	0.060	17.6	0.232	1,805.0	190
08/08/12 08:24	0.017	13.4	37.1	103.8	1,805.0	0.060	16.9	0.232	1,805.0	190
08/08/12 08:25	0.016	13.3	38.1	104.5	1,805.0	0.062	16.5	0.235	1,805.0	190
08/08/12 08:26	0.017	13.3	37.9	104.5	1,805.0	0.061	16.8	0.235	1,805.0	190
08/08/12 08:27	0.015	13.4	37.5	114.7	1,805.0	0.060	15.7	0.256	1,805.0	190
08/08/12 08:28	0.014	13.4	37.8	104.2	1,805.0	0.061	14.2	0.233	1,805.0	190
08/08/12 08:29	0.015	13.3	38.6	88.0	1,805.0	0.063	15.2	0.198	1,805.0	190
08/08/12 08:30	0.015	13.4	37.4	89.7	1,805.0	0.060	15.5	0.201	1,805.0	188
Average	0.016	13.3	38.0	97.5	1,805.0	0.062	16.3	0.219	1,805.0	190
Minimum	0.014	13.3	36.7	83.8	1,805.0	0.059	14.2	0.189	1,805.0	188
Maximum	0.018	13.4	39.9	114.7	1,805.0	0.065	18.7	0.256	1,805.0	192
Summation	0.334	280.1	798.8	2,048.2	37,905.0	1.292	341.7	4.599	37,905.0	3,980
Included Data	21	21	21	21	21	21	21	21	21	21
Total number of	21	21	21	21	21	21	21	21	21	21

F = Unit Offline E = Exceedance
I = Invalid M = Maintenance
Report Generated: 08/08/12 08:32

C = Calibration S = Substituted
T = Out Of Control * = Suspect
Report Version 3.1.1130 STAC

MPU00946

RUN # 4

Average Data

Plant: Manitowoc Public Utilities
Interval: 1 Minute
Type: Roll
Report Period: 08/08/2012 08:40 Through 08/08/2012 09:00
Time Online Criteria: 1 minute(s)

Source	B8								S20	
Parameter (Unit)	B8CO#M (#/MMBTU)	B8CPCO2 (PERCENT)	B8CPNOX (PPM)	B8CPSO2 (PPM)	B8FFACT (MMBTU/CF)	B8NOX#M (MMBTU/HR)	B8PCO (PPM)	B8SO2#M (#/MMBTU)	B8FFACT (MMBTU/CF)	S20STEAM (KLBS/HR)
08/08/12 08:40	0.017	13.3	37.3	97.7	1,805.0	0.060	17.3	0.220	1,805.0	188
08/08/12 08:41	0.018	13.3	39.1	91.0	1,805.0	0.063	17.9	0.205	1,805.0	188
08/08/12 08:42	0.018	13.3	38.1	106.5	1,805.0	0.062	18.1	0.240	1,805.0	188
08/08/12 08:43	0.018	13.4	38.0	103.6	1,805.0	0.061	18.6	0.232	1,805.0	190
08/08/12 08:44	0.019	13.3	37.3	94.8	1,805.0	0.060	19.7	0.214	1,805.0	191
08/08/12 08:45	0.019	13.3	37.3	93.3	1,805.0	0.060	19.0	0.210	1,805.0	191
08/08/12 08:46	0.018	13.3	37.4	87.7	1,805.0	0.061	18.2	0.198	1,805.0	189
08/08/12 08:47	0.017	13.3	35.3	97.9	1,805.0	0.057	17.6	0.221	1,805.0	187
08/08/12 08:48	0.018	13.4	35.3	104.9	1,805.0	0.057	18.4	0.235	1,805.0	188
08/08/12 08:49	0.017	13.4	36.7	106.2	1,805.0	0.059	17.0	0.237	1,805.0	191
08/08/12 08:50	0.016	13.4	35.8	116.3	1,805.0	0.058	15.8	0.260	1,805.0	191
08/08/12 08:51	0.016	13.4	35.2	122.9	1,805.0	0.057	16.8	0.275	1,805.0	191
08/08/12 08:52	0.017	13.4	36.8	115.9	1,805.0	0.059	17.2	0.259	1,805.0	190
08/08/12 08:53	0.018	13.5	37.6	118.8	1,805.0	0.060	18.1	0.264	1,805.0	190
08/08/12 08:54	0.019	13.4	35.3	113.1	1,805.0	0.057	18.9	0.253	1,805.0	190
08/08/12 08:55	0.017	13.4	37.6	113.3	1,805.0	0.060	17.4	0.253	1,805.0	190
08/08/12 08:56	0.017	13.4	35.5	112.5	1,805.0	0.057	17.1	0.252	1,805.0	190
08/08/12 08:57	0.016	13.5	36.2	123.7	1,805.0	0.058	16.9	0.275	1,805.0	191
4 08/08/12 08:58	0.016	13.4	35.8	107.0	1,805.0	0.058	16.3	0.239	1,805.0	193
08/08/12 08:59	0.017	13.4	35.1	116.2	1,805.0	0.056	17.8	0.260	1,805.0	191
08/08/12 09:00	0.016	13.4	36.1	120.2	1,805.0	0.058	16.7	0.269	1,805.0	188
Average	0.017	13.4	36.6	107.8	1,805.0	0.059	17.7	0.241	1,805.0	190
Minimum	0.016	13.3	35.1	87.7	1,805.0	0.056	15.8	0.198	1,805.0	187
Maximum	0.019	13.5	39.1	123.7	1,805.0	0.063	19.7	0.275	1,805.0	193
Summation	0.364	280.9	768.8	2,263.5	37,905.0	1.238	370.8	5.071	37,905.0	3,986
Included Data	21	21	21	21	21	21	21	21	21	21
Total number of	21	21	21	21	21	21	21	21	21	21

F = Unit Offline E = Exceedance
I = Invalid M = Maintenance
Report Generated: 08/08/12 09:01

C = Calibration S = Substituted
T = Out Of Control * = Suspect
Report Version 3.1.1130 STAC

RUN 5

Average Data

Plant: Manitowoc Public Utilities
Interval: 1 Minute
Type: Roll
Report Period: 08/08/2012 09:40 Through 08/08/2012 10:00
Time Online Criteria: 1 minute(s)

Source	B8								S20	
Parameter (Unit)	B8CO#M (#/MMBTU)	B8CPCO2 (PERCENT)	B8CPNOX (PPM)	B8CPSO2 (PPM)	B8FFACT (MMBTU/CF)	B8NOX#M (MMBTU/HR)	B8PCO (PPM)	B8SO2#M (#/MMBTU)	B8FFACT (MMBTU/CF)	S20STEAM (KLBS/HR)
08/08/12 09:40	0.018	13.0	45.3	95.7	1,805.0	0.075	18.2	0.221	1,805.0	197
08/08/12 09:41	0.019	13.1	44.9	103.2	1,805.0	0.074	19.1	0.236	1,805.0	196
08/08/12 09:42	0.018	13.0	43.4	105.9	1,805.0	0.072	17.7	0.244	1,805.0	192
08/08/12 09:43	0.017	13.1	43.9	88.0	1,805.0	0.072	17.1	0.201	1,805.0	191
08/08/12 09:44	0.018	13.1	43.0	89.3	1,805.0	0.071	18.0	0.204	1,805.0	193
08/08/12 09:45	0.019	13.1	42.4	95.1	1,805.0	0.070	18.5	0.218	1,805.0	193
08/08/12 09:46	0.019	13.2	41.5	94.7	1,805.0	0.068	19.0	0.215	1,805.0	192
08/08/12 09:47	0.018	13.2	40.9	88.8	1,805.0	0.067	18.6	0.202	1,805.0	191
08/08/12 09:48	0.019	13.2	42.0	95.9	1,805.0	0.069	18.9	0.218	1,805.0	194
08/08/12 09:49	0.018	13.2	44.0	97.7	1,805.0	0.072	18.6	0.222	1,805.0	195
08/08/12 09:50	0.021	13.1	42.9	86.5	1,805.0	0.071	20.6	0.198	1,805.0	195
08/08/12 09:51	0.021	13.1	40.6	85.0	1,805.0	0.067	20.5	0.194	1,805.0	192
08/08/12 09:52	0.019	13.2	40.9	94.7	1,805.0	0.067	19.3	0.215	1,805.0	192
08/08/12 09:53	0.020	13.2	42.1	80.7	1,805.0	0.069	19.8	0.183	1,805.0	192
08/08/12 09:54	0.018	13.2	42.0	88.5	1,805.0	0.069	17.6	0.201	1,805.0	192
08/08/12 09:55	0.018	13.2	42.3	92.9	1,805.0	0.069	18.1	0.211	1,805.0	192
08/08/12 09:56	0.017	13.2	42.5	96.3	1,805.0	0.069	17.3	0.219	1,805.0	195
08/08/12 09:57	0.019	13.2	42.8	94.4	1,805.0	0.070	19.2	0.214	1,805.0	196
08/08/12 09:58	0.019	13.2	42.1	95.7	1,805.0	0.069	19.5	0.217	1,805.0	194
08/08/12 09:59	0.018	13.2	43.6	93.5	1,805.0	0.071	17.6	0.212	1,805.0	191
08/08/12 10:00	0.017	13.2	41.8	92.2	1,805.0	0.068	17.0	0.209	1,805.0	191
Average	0.019	13.2	42.6	93.1	1,805.0	0.070	18.6	0.212	1,805.0	193
Minimum	0.017	13.0	40.6	80.7	1,805.0	0.067	17.0	0.183	1,805.0	191
Maximum	0.021	13.2	45.3	105.9	1,805.0	0.075	20.6	0.244	1,805.0	197
Summation	0.390	276.2	894.9	1,954.7	37,905.0	1.469	390.2	4.454	37,905.0	4,056
Included Data	21	21	21	21	21	21	21	21	21	21
Total number of	21	21	21	21	21	21	21	21	21	21

F = Unit Offline E = Exceedance
I = Invalid M = Maintenance
Report Generated: 08/08/12 10:01

C = Calibration S = Substituted
T = Out Of Control * = Suspect
Report Version 3.1.1130 STAC

MPU00948

Run #6

Average Data

Plant: Manitowoc Public Utilities
Interval: 1 Minute
Type: Roll
Report Period: 08/08/2012 10:10 Through 08/08/2012 10:30
Time Online Criteria: 1 minute(s)

Source	B8								S20	
Parameter (Unit)	B8CO#M (#/MMBTU)	B8CPCO2 (PERCENT)	B8CPNOX (PPM)	B8CPSO2 (PPM)	B8FFACT (MMBTU/CF)	B8NOX#M (MMBTU/HR)	B8PCO (PPM)	B8SO2#M (#/MMBTU)	B8FFACT (MMBTU/CF)	S20STEAM (KLBS/HR)
08/08/12 10:10	0.016	13.3	42.4	92.2	1,805.0	0.069	16.7	0.208	1,805.0	191
08/08/12 10:11	0.017	13.3	42.1	102.5	1,805.0	0.068	17.6	0.231	1,805.0	193
08/08/12 10:12	0.018	13.2	43.4	105.5	1,805.0	0.071	18.1	0.239	1,805.0	194
08/08/12 10:13	0.018	13.3	43.1	104.4	1,805.0	0.070	17.9	0.235	1,805.0	194
08/08/12 10:14	0.020	13.2	43.1	92.5	1,805.0	0.070	20.2	0.210	1,805.0	194
08/08/12 10:15	0.017	13.2	41.7	91.8	1,805.0	0.068	17.1	0.208	1,805.0	194
08/08/12 10:16	0.017	13.2	43.0	101.9	1,805.0	0.070	16.7	0.231	1,805.0	194
08/08/12 10:17	0.017	13.2	43.6	95.4	1,805.0	0.071	17.4	0.217	1,805.0	194
08/08/12 10:18	0.018	13.2	43.1	97.6	1,805.0	0.070	18.1	0.222	1,805.0	194
08/08/12 10:19	0.018	13.3	42.8	91.6	1,805.0	0.069	18.1	0.206	1,805.0	194
08/08/12 10:20	0.019	13.2	41.9	100.6	1,805.0	0.068	19.5	0.228	1,805.0	194
08/08/12 10:21	0.020	13.2	43.7	96.8	1,805.0	0.071	19.9	0.220	1,805.0	194
08/08/12 10:22	0.018	13.2	43.2	95.1	1,805.0	0.071	17.8	0.216	1,805.0	194
08/08/12 10:23	0.018	13.2	40.8	95.3	1,805.0	0.067	18.0	0.216	1,805.0	193
08/08/12 10:24	0.019	13.2	40.4	91.1	1,805.0	0.066	19.1	0.207	1,805.0	193
08/08/12 10:25	0.021	13.3	42.1	102.0	1,805.0	0.068	21.1	0.230	1,805.0	193
08/08/12 10:26	0.020	13.2	42.6	103.4	1,805.0	0.070	20.4	0.235	1,805.0	192
08/08/12 10:27	0.020	13.3	42.9	99.0	1,805.0	0.070	20.0	0.223	1,805.0	192
08/08/12 10:28	0.018	13.2	41.1	90.5	1,805.0	0.067	18.3	0.205	1,805.0	193
08/08/12 10:29	0.018	13.2	43.4	102.5	1,805.0	0.071	18.1	0.233	1,805.0	193
08/08/12 10:30	0.018	13.2	40.5	91.3	1,805.0	0.066	18.2	0.207	1,805.0	194
Average	0.018	13.2	42.4	97.3	1,805.0	0.069	18.5	0.220	1,805.0	193
Minimum	0.016	13.2	40.4	90.5	1,805.0	0.066	16.7	0.205	1,805.0	191
Maximum	0.021	13.3	43.7	105.5	1,805.0	0.071	21.1	0.239	1,805.0	194
Summation	0.385	277.8	890.9	2,043.0	37,905.0	1.451	388.3	4.627	37,905.0	4,061
Included Data	21	21	21	21	21	21	21	21	21	21
Total number of	21	21	21	21	21	21	21	21	21	21

F = Unit Offline E = Exceedance
I = Invalid M = Maintenance
Report Generated: 08/08/12 10:33

C = Calibration S = Substituted
T = Out Of Control * = Suspect
Report Version 3.1.1130 STAC

MPU00949

Run #7

Average Data

Plant: Manitowoc Public Utilities
Interval: 1 Minute
Type: Roll
Report Period: 08/08/2012 10:40 Through 08/08/2012 11:00
Time Online Criteria: 1 minute(s)

Source	B8								S20	
Parameter (Unit)	B8CO#M (#/MMBTU)	B8CPCO2 (PERCENT)	B8CPNOX (PPM)	B8CPSO2 (PPM)	B8FFACT (MMBTU/CF)	B8NOX#M (MMBTU/HR)	B8PCO (PPM)	B8SO2#M (#/MMBTU)	B8FFACT (MMBTU/CF)	S20STEAM (KLBS/HR)
08/08/12 10:40	0.019	13.3	41.0	104.0	1,805.0	0.066	19.7	0.234	1,805.0	194
08/08/12 10:41	0.020	13.3	42.6	98.9	1,805.0	0.069	20.3	0.223	1,805.0	192
08/08/12 10:42	0.020	13.3	42.5	102.2	1,805.0	0.069	20.5	0.230	1,805.0	192
08/08/12 10:43	0.021	13.3	41.1	104.0	1,805.0	0.067	21.4	0.234	1,805.0	192
08/08/12 10:44	0.019	13.3	42.1	107.6	1,805.0	0.068	19.5	0.242	1,805.0	192
08/08/12 10:45	0.018	13.3	40.8	100.3	1,805.0	0.066	18.3	0.226	1,805.0	192
08/08/12 10:46	0.018	13.2	42.4	106.5	1,805.0	0.069	18.5	0.242	1,805.0	197
08/08/12 10:47	0.019	13.2	43.3	108.1	1,805.0	0.071	19.0	0.245	1,805.0	194
08/08/12 10:48	0.018	13.2	43.2	104.8	1,805.0	0.071	18.0	0.238	1,805.0	191
08/08/12 10:49	0.019	13.1	42.0	90.5	1,805.0	0.069	19.0	0.207	1,805.0	192
08/08/12 10:50	0.019	13.2	43.5	103.5	1,805.0	0.071	19.1	0.235	1,805.0	192
08/08/12 10:51	0.018	13.2	42.4	103.9	1,805.0	0.069	18.5	0.236	1,805.0	197
08/08/12 10:52	0.019	13.2	41.9	111.3	1,805.0	0.068	18.8	0.253	1,805.0	194
08/08/12 10:53	0.019	13.2	41.0	100.5	1,805.0	0.067	19.5	0.228	1,805.0	192
08/08/12 10:54	0.019	13.2	41.6	99.4	1,805.0	0.068	19.0	0.226	1,805.0	191
08/08/12 10:55	0.019	13.2	40.5	100.6	1,805.0	0.066	19.6	0.228	1,805.0	197
08/08/12 10:56	0.019	13.2	40.5	110.7	1,805.0	0.066	19.1	0.251	1,805.0	194
08/08/12 10:57	0.017	13.3	41.2	107.3	1,805.0	0.067	17.7	0.242	1,805.0	191
08/08/12 10:58	0.020	13.3	39.9	113.6	1,805.0	0.065	20.4	0.256	1,805.0	192
08/08/12 10:59	0.019	13.3	40.1	113.6	1,805.0	0.065	18.8	0.256	1,805.0	195
08/08/12 11:00	0.019	13.4	40.2	120.1	1,805.0	0.065	19.6	0.269	1,805.0	196
Average	0.019	13.2	41.6	105.3	1,805.0	0.068	19.3	0.238	1,805.0	193
Minimum	0.017	13.1	39.9	90.5	1,805.0	0.065	17.7	0.207	1,805.0	191
Maximum	0.021	13.4	43.5	120.1	1,805.0	0.071	21.4	0.269	1,805.0	197
Summation	0.398	278.2	873.8	2,211.4	37,905.0	1.422	404.3	5.001	37,905.0	4,059
Included Data	21	21	21	21	21	21	21	21	21	21
Total number of	21	21	21	21	21	21	21	21	21	21

F = Unit Offline E = Exceedance
I = Invalid M = Maintenance
Report Generated: 08/08/12 11:01

C = Calibration S = Substituted
T = Out Of Control * = Suspect
Report Version 3.1.1130 STAC

MPU00950

~~Unit~~ Run # 8

Average Data

Plant: Manitowoc Public Utilities
Interval: 1 Minute
Type: Roll
Report Period: 08/08/2012 11:10 Through 08/08/2012 11:30
Time Online Criteria: 1 minute(s)

Source	B8								S20	
Parameter (Unit)	B8CO#M (#/MMBTU)	B8CPCO2 (PERCENT)	B8CPNOX (PPM)	B8CPSO2 (PPM)	B8FFACT (MMBTU/CF)	B8NOX#M (MMBTU/HR)	B8PCO (PPM)	B8SO2#M (#/MMBTU)	B8FFACT (MMBTU/CF)	S20STEAM (KLBS/HR)
08/08/12 11:10	0.020	13.4	39.9	111.1	1,805.0	0.064	20.9	0.248	1,805.0	194
08/08/12 11:11	0.022	13.4	39.2	115.3	1,805.0	0.063	22.2	0.258	1,805.0	194
08/08/12 11:12	0.020	13.4	38.0	116.9	1,805.0	0.061	20.3	0.261	1,805.0	192
08/08/12 11:13	0.019	13.5	38.9	124.0	1,805.0	0.062	19.9	0.275	1,805.0	191
08/08/12 11:14	0.020	13.5	38.9	140.4	1,805.0	0.062	20.7	0.312	1,805.0	191
08/08/12 11:15	0.020	13.5	38.9	136.1	1,805.0	0.062	21.0	0.302	1,805.0	194
08/08/12 11:16	0.018	13.5	39.4	135.5	1,805.0	0.063	18.8	0.301	1,805.0	197
08/08/12 11:17	0.019	13.5	39.7	130.5	1,805.0	0.063	20.0	0.290	1,805.0	191
08/08/12 11:18	0.021	13.6	39.9	127.3	1,805.0	0.063	22.1	0.280	1,805.0	191
08/08/12 11:19	0.020	13.5	41.5	123.6	1,805.0	0.066	20.9	0.274	1,805.0	197
08/08/12 11:20	0.020	13.6	43.3	122.7	1,805.0	0.069	20.9	0.270	1,805.0	197
08/08/12 11:21	0.022	13.5	43.3	124.5	1,805.0	0.069	22.1	0.276	1,805.0	195
08/08/12 11:22	0.021	13.4	43.3	113.9	1,805.0	0.070	21.3	0.255	1,805.0	194
08/08/12 11:23	0.019	13.4	44.0	112.1	1,805.0	0.071	19.2	0.251	1,805.0	194
08/08/12 11:24	0.019	13.4	43.7	120.8	1,805.0	0.070	19.7	0.270	1,805.0	196
08/08/12 11:25	0.020	13.4	44.1	115.6	1,805.0	0.071	20.2	0.258	1,805.0	197
08/08/12 11:26	0.020	13.4	44.1	114.9	1,805.0	0.071	20.9	0.257	1,805.0	197
08/08/12 11:27	0.021	13.4	45.0	119.8	1,805.0	0.072	21.5	0.268	1,805.0	194
08/08/12 11:28	0.019	13.3	45.3	117.3	1,805.0	0.073	18.9	0.264	1,805.0	195
08/08/12 11:29	0.020	13.3	44.3	112.9	1,805.0	0.072	19.9	0.254	1,805.0	199
08/08/12 11:30	0.020	13.3	46.3	116.4	1,805.0	0.075	19.9	0.262	1,805.0	194
Average	0.020	13.4	42.0	121.5	1,805.0	0.067	20.5	0.271	1,805.0	194
Minimum	0.018	13.3	38.0	111.1	1,805.0	0.061	18.8	0.248	1,805.0	191
Maximum	0.022	13.6	46.3	140.4	1,805.0	0.075	22.2	0.312	1,805.0	199
Summation	0.420	282.2	881.0	2,551.6	37,905.0	1.412	431.3	5.686	37,905.0	4,084
Included Data	21	21	21	21	21	21	21	21	21	21
Total number of	21	21	21	21	21	21	21	21	21	21

F = Unit Offline E = Exceedance
I = Invalid M = Maintenance
Report Generated: 08/08/12 11:34

C = Calibration S = Substituted
T = Out Of Control * = Suspect
Report Version 3.1.1130 STAC

MPU00951

Average Data

Plant: Manitowoc Public Utilities
Interval: 1 Minute
Type: Roll
Report Period: 08/08/2012 11:40 Through 08/08/2012 12:00
Time Online Criteria: 1 minute(s)

Source	B8								S20	
Parameter (Unit)	B8CO#M (#/MMBTU)	B8CPCO2 (PERCENT)	B8CPNOX (PPM)	B8CPSO2 (PPM)	B8FFACT (MMBTU/CF)	B8NOX#M (MMBTU/HR)	B8PCO (PPM)	B8SO2#M (#/MMBTU)	B8FFACT (MMBTU/CF)	S20STEAM (KLBS/HR)
08/08/12 11:40	0.019	13.4	44.0	120.5	1,805.0	0.071	19.4	0.269	1,805.0	195
08/08/12 11:41	0.019	13.3	44.2	105.9	1,805.0	0.072	19.4	0.239	1,805.0	195
08/08/12 11:42	0.021	13.3	43.0	122.3	1,805.0	0.070	21.0	0.276	1,805.0	196
08/08/12 11:43	0.020	13.4	42.9	121.9	1,805.0	0.069	19.9	0.273	1,805.0	198
08/08/12 11:44	0.020	13.3	43.4	117.4	1,805.0	0.070	20.0	0.264	1,805.0	197
08/08/12 11:45	0.019	13.3	42.7	114.3	1,805.0	0.069	19.2	0.258	1,805.0	194
08/08/12 11:46	0.021	13.3	44.2	109.9	1,805.0	0.072	21.2	0.248	1,805.0	194
08/08/12 11:47	0.020	13.3	43.7	108.8	1,805.0	0.071	19.9	0.245	1,805.0	194
08/08/12 11:48	0.018	13.3	43.7	108.4	1,805.0	0.071	18.4	0.244	1,805.0	197
08/08/12 11:49	0.020	13.4	42.8	101.8	1,805.0	0.069	20.6	0.228	1,805.0	198
08/08/12 11:50	0.017	13.4	44.6	111.7	1,805.0	0.072	16.9	0.250	1,805.0	195
08/08/12 11:51	0.019	13.4	44.4	124.0	1,805.0	0.071	19.4	0.277	1,805.0	191
08/08/12 11:52	0.020	13.3	44.2	113.4	1,805.0	0.072	20.0	0.255	1,805.0	197
08/08/12 11:53	0.019	13.3	44.7	112.6	1,805.0	0.072	19.4	0.254	1,805.0	199
08/08/12 11:54	0.021	13.3	45.9	114.1	1,805.0	0.074	21.1	0.257	1,805.0	196
08/08/12 11:55	0.022	13.2	48.7	97.8	1,805.0	0.080	22.2	0.222	1,805.0	194
08/08/12 11:56	0.022	13.2	49.8	89.1	1,805.0	0.081	22.1	0.202	1,805.0	195
08/08/12 11:57	0.021	13.2	50.5	91.8	1,805.0	0.082	20.9	0.208	1,805.0	198
08/08/12 11:58	0.023	13.2	52.5	89.6	1,805.0	0.086	22.8	0.203	1,805.0	197
08/08/12 11:59	0.023	13.1	53.0	72.0	1,805.0	0.087	23.0	0.165	1,805.0	194
08/08/12 12:00	0.023	13.1	52.1	71.6	1,805.0	0.086	22.8	0.164	1,805.0	193
Average	0.020	13.3	46.0	105.7	1,805.0	0.075	20.5	0.238	1,805.0	196
Minimum	0.017	13.1	42.7	71.6	1,805.0	0.069	16.9	0.164	1,805.0	191
Maximum	0.023	13.4	53.0	124.0	1,805.0	0.087	23.0	0.277	1,805.0	199
Summation	0.427	279.0	965.0	2,218.9	37,905.0	1.567	429.6	5.001	37,905.0	4,107
Included Data	21	21	21	21	21	21	21	21	21	21
Total number of	21	21	21	21	21	21	21	21	21	21

F = Unit Offline E = Exceedance
I = Invalid M = Maintenance
Report Generated: 08/08/12 12:02

C = Calibration S = Substituted
T = Out Of Control * = Suspect
Report Version 3.1.1130 STAC

Run # 10

Average Data

Plant: Manitowoc Public Utilities
Interval: 1 Minute
Type: Roll
Report Period: 08/08/2012 12:10 Through 08/08/2012 12:30
Time Online Criteria: 1 minute(s)

Source	B8								S20	
Parameter (Unit)	B8CO#M (#/MMBTU)	B8CPCO2 (PERCENT)	B8CPNOX (PPM)	B8CPSO2 (PPM)	B8FFACT (MMBTU/CF)	B8NOX#M (MMBTU/HR)	B8PCO (PPM)	B8SO2#M (#/MMBTU)	B8FFACT (MMBTU/CF)	S20STEAM (KLBS/HR)
08/08/12 12:10	0.020	13.1	50.0	69.7	1,805.0	0.082	20.2	0.159	1,805.0	193
08/08/12 12:11	0.021	13.1	48.9	67.5	1,805.0	0.080	21.0	0.154	1,805.0	193
08/08/12 12:12	0.022	13.1	50.4	70.0	1,805.0	0.083	21.8	0.160	1,805.0	193
08/08/12 12:13	0.021	13.1	51.3	64.7	1,805.0	0.084	21.0	0.148	1,805.0	193
08/08/12 12:14	0.021	13.1	51.0	64.3	1,805.0	0.084	21.0	0.147	1,805.0	193
08/08/12 12:15	0.021	13.1	50.7	66.5	1,805.0	0.083	20.4	0.152	1,805.0	193
08/08/12 12:16	0.021	13.1	51.6	65.4	1,805.0	0.085	21.4	0.150	1,805.0	193
08/08/12 12:17	0.021	13.0	51.7	63.3	1,805.0	0.086	21.0	0.146	1,805.0	193
08/08/12 12:18	0.022	13.0	49.3	59.4	1,805.0	0.082	21.6	0.137	1,805.0	193
08/08/12 12:19	0.022	12.9	46.6	73.7	1,805.0	0.078	21.4	0.171	1,805.0	193
08/08/12 12:20	0.021	12.9	45.3	75.3	1,805.0	0.076	20.3	0.175	1,805.0	193
08/08/12 12:21	0.019	13.0	45.4	91.0	1,805.0	0.075	18.9	0.210	1,805.0	193
08/08/12 12:22	0.019	13.0	46.4	97.5	1,805.0	0.077	18.7	0.225	1,805.0	193
08/08/12 12:23	0.018	13.0	44.9	91.7	1,805.0	0.074	18.2	0.211	1,805.0	193
08/08/12 12:24	0.022	13.0	42.3	84.1	1,805.0	0.070	21.7	0.194	1,805.0	193
08/08/12 12:25	0.020	13.0	42.1	83.2	1,805.0	0.070	20.0	0.192	1,805.0	193
08/08/12 12:26	0.020	13.0	42.8	89.0	1,805.0	0.071	19.4	0.205	1,805.0	193
08/08/12 12:27	0.018	13.0	43.7	96.9	1,805.0	0.072	17.7	0.223	1,805.0	192
08/08/12 12:28	0.019	12.9	42.1	98.5	1,805.0	0.070	19.0	0.229	1,805.0	191
08/08/12 12:29	0.020	12.9	42.5	91.8	1,805.0	0.071	19.7	0.213	1,805.0	194
08/08/12 12:30	0.021	12.9	41.3	85.4	1,805.0	0.069	20.9	0.198	1,805.0	195
Average	0.020	13.0	46.7	78.5	1,805.0	0.077	20.3	0.181	1,805.0	193
Minimum	0.018	12.9	41.3	59.4	1,805.0	0.069	17.7	0.137	1,805.0	191
Maximum	0.022	13.1	51.7	98.5	1,805.0	0.086	21.8	0.229	1,805.0	195
Summation	0.429	273.2	980.3	1,648.9	37,905.0	1.622	425.3	3.799	37,905.0	4,053
Included Data	21	21	21	21	21	21	21	21	21	21
Total number of	21	21	21	21	21	21	21	21	21	21

10

MPU00953

F = Unit Offline E = Exceedance
I = Invalid M = Maintenance
Report Generated: 08/08/12 12:35

C = Calibration S = Substituted
T = Out Of Control * = Suspect
Report Version 3.1.1130 STAC

APPENDIX G

SAMPLE TRAIN CALIBRATIONS

INTERPOLL LABORATORIES, INC.
(763) 786-6020

Stack Sampling Department - QA
Field Barometer Calibration Sheet

Date: 6/25/2012
Technician: Rory Eiynck
Mercury Column Barometer Number: Weighing Room Barometer
Aneroid Barometer Number: Ultimeter #3 (Rory's)

Reference Mercury Barometer Reading	Ambient Temperature	Temperature Correction Factor	Adjusted Mercury Barometer Reading	Initial Field Barometer Reading	Difference (P_{ba} - P_{bm})
29.34	78	0.132	29.21	29.19	-0.018

Weighing room barometer setup:

1) Using the set screw on the bottom of the barometer, adjust the level of the mercury reservoir to the point that the level indicator makes slight contact with the mercury. A flashlight can aid in seeing the dimple formed when the level indicator makes contact with the mercury.

2) Slide the measurement ruler on the barometer to the point where the bottom of the ruler is in line with the top of the mercury column's reverse meniscus. Record the reading (in. Hg)

3) Take a temperature reading and record the temperature correction factor from the lookup table near the barometer.

4) Apply the temperature correction factor to the mercury barometer.

5) Adjust the field barometer reading to within +/- 0.1 in. Hg of the reference barometer reading.

Has this barometer shown any consistent problems with calibration? Has the problem been alleviated?_____

Note: Aneroid barometers will be calibrated periodically against a mercury column barometer. The aneroid barometer to be calibrated should be placed in close proximity to the mercury barometer and left to equilibrate for 20 - 30 minutes before calibrating. Aneroid barometer will be calibrated to the adjusted mercury barometer readings.

Alternative Calibration Procedure:

1) Obtain the station value or absolute barometric pressure Pr from a nearby National Weather Service station and its elevation (A) in feet above sea level.
2) Determine the elevation (B) in feet above sea level of the site of the field barometer.(local airport)
3) Calculate the site barometric pressure (Pb) as follows:

$$Pb = Pr + 0.001\ (A-B)$$

4) Compare the field barometer reading against Pb obtained in step 3.
5) Adjust the field barometer reading to within +/- 0.1 in. Hg.

MPU00955

INTERPOLL LABORATORIES, INC.
(763) 786-6020

Temperature Measurement Device Calibration Sheet

Unit under Test:

Vendor	Omega	Serial Number	201108
Model	hh-81	Thermocouple Type	Type K
Range	0-2100 °F	Technician	Rory Eiynck
Date of Calibration	6/25/2012	PDT Number	85

Method of Calibration:

Omega Model CL-300 Type K Thermocouple Simulator which provides 22 precise temperature equivalent millivolt signals. The CL-300 is cold junction compensated. Calibration accuracy is +/- 0.1 % of span(2100 oF) +/- 1 degree (for negative temperatures add +/- 2 degrees). The CL-300 simulated exactly the millivoltage of a Type K thermocouple at the indicated temperature.

Desired Temp. (°F) Nominal	Response of Unit Under Test (°F)	Deviation	
		Δ t (°F)	%
0	7	7	1.522
100	101	1	0.179
200	209	9	1.364
300	303	3	0.395
400	405	5	0.581
500	501	1	0.104
600	606	6	0.566
700	701	1	0.086
800	806	6	0.476
900	902	2	0.147
1000	1007	7	0.479
1100	1105	5	0.321
1200	1207	7	0.422
1300	1306	6	0.341
1400	1407	7	0.376
1500	1506	6	0.306
1600	1607	7	0.340
1700	1704	4	0.185
1800	1803	3	0.133
1900	1904	4	0.169
2000			
2100	OF		
	Average:	5	0.425

OF = off scale response by unit under test (oF)

% dev = 100Δt/(460+t)

☐ Unit was in tolerance

(Must be within +/- 1.5% absolute reference temperature)

☐ Unit was not in tolerance : Recalibrated see new calibration sheet or unit put out of service.

INTERPOLL LABORATORIES, INC.
(763) 786-6020

Temperature Measurement Device Calibration Sheet

Unit under Test:

Vendor	Cen Tech	Serial Number	6048682
Model	92242	Thermocouple Type	Type K
Range	0-2000	Technician	Mike Bonham
Date of Calibration	8/2/2012	PDT Number	138

Method of Calibration:

Omega Model CL-300 Type K Thermocouple Simulator which provides 22 precise temperature equivalent millivolt signals. The CL-300 is cold junction compensated. Calibration accuracy is +/- 0.1 % of span(2100 oF) +/- 1 degree (for negative temperatures add +/- 2 degrees). The CL-300 simulated exactly the millivoltage of a Type K thermocouple at the indicated temperature.

Desired Temp. (°F) Nominal	Response of Unit Under Test (°F)	Deviation	
		Δt (°F)	%
0	9	9	1.919
100	103	3	0.533
200	210	10	1.493
300	304	4	0.524
400	405	5	0.578
500	501	1	0.104
600	605	5	0.469
700	700	0	0.000
800	804	4	0.316
900	901	1	0.073
1000	1006	6	0.409
1100	1103	3	0.192
1200	1204	4	0.240
1300	1301	1	0.057
1400	1404	4	0.215
1500	1503	3	0.153
1600	1604	4	0.194
1700	1700	0	0.000
1800	1800	0	0.000
1900	1901	1	0.042
2000	2000	0	0.000
2100			
	Average:	3.24	0.3577

OF = off scale response by unit under test (oF)

% dev = 100Δt/(460+t)

☐ Unit was in tolerance

(Must be within +/- 1.5% absolute reference temperature)

☐ Unit was not in tolerance : Recalibrated see new calibration sheet or unit put out of service.

MPU00957

APPENDIX H

PROCEDURES

Please Note: In an effort to conserve paper, the procedure section of the appendix has been reserved for explanations of EPA methodology deviations. Please refer to the specific EPA Methods on the following EPA website: http://www.epa.gov/ttn/emc/

APPENDIX I

CALCULATION EQUATIONS

data; correct each wet CEMS run using the corresponding CEMS moisture monitor date using Equation 2-1.

$$\text{Concentration}_{(dry)} = \frac{\text{Concentration}_{(wet)}}{(1-B_{ws})} \qquad \text{Eq. 2-1}$$

12.1.2 Correction to Units of Standard (as applicable). Correct each dry RM run to the units of the emission standard with the corresponding Method 3B data; correct each dry CEMS run using the corresponding CEMS diluent monitor data as follows:

12.1.2.1 Correct to Diluent Basis. The following is an example of concentration (ppm) correction to 7% oxygen.

$$ppm_{(corr)} = ppm_{(uncorr)} \left[\frac{20.9-7.0}{20.9-\%O_{2(dry)}}\right] \qquad \text{Eq. 2-2}$$

The following is an example of mass/gross calorific value (lbs/million Btu) correction.

$$\text{lbs/MMBtu} = \text{Conc}_{(dry)}\ (\text{F-factor})\ (20.9/20.9-\ \%O_2)$$

12.2 Arithmetic Mean. Calculate the arithmetic mean of the difference, d, of a data set as follows:

$$\bar{d} = \frac{1}{n}\sum_{i=1}^{n} d_i \qquad \text{Eq. 2-3}$$

where:

n = Number of data points.

$\sum_{i=1}^{n} d_i$ = Algebraic summation of the individual differences d_i.

MPU00960

12.3 Standard Deviation. Calculate the standard deviation, S_d, as follows:

$$S_d = \left[\frac{\sum_{i=1}^{n} d_i^2 - \frac{\left[\sum_{i=1}^{n} d_i\right]^2}{n}}{n-1} \right]^{\frac{1}{2}} \qquad \text{Eq. 2-4}$$

12.4 Confidence Coefficient. Calculate the 2.5 percent error confidence coefficient (one-tailed), CC, as follows:

$$CC = t_{0.975} \frac{S_d}{\sqrt{n}} \qquad \text{Eq. 2-5}$$

where: $t_{0.975}$ = t-value (see Table 2-1).

12.5 Relative Accuracy. Calculate the RA of a set of data as follows:

$$RA = \frac{\left[\left|\bar{d}\right| + \left|CC\right|\right]}{\overline{RM}} \times 100 \qquad \text{Eq. 2-6}$$

where:

$|\bar{d}|$ = Absolute value of the mean differences (from Equation 2-3).

$|CC|$ = Absolute value of the confidence coefficient (from Equation 2-3).

MPU00961

$\overline{RM}$ = Average RM value. In cases where the average emissions for the test are less than 50 percent of the applicable standard, substitute the emission standard value in the denominator of Eq. 2-6 in place of $\overline{RM}$. In all other cases, use $\overline{RM}$.

13.0 Method Performance.

13.1 Calibration Drift Performance Specification. The CEMS calibration must not drift or deviate from the reference value of the gas cylinder, gas cell, or optical filter by more than 2.5 percent of the span value. If the CEMS includes pollutant and diluent monitors, the CD must be determined separately for each in terms of concentrations (See Performance Specification 3 for the diluent specifications), and none of the CDs may exceed the specification.

13.2 Relative Accuracy Performance Specification. The RA of the CEMS must be no greater than 20 percent when $\overline{RM}$ is used in the denominator of Eq. 2-6 (average emissions during test are greater than 50 percent of the emission standard) or 10 percent when the applicable emission standard is used in the denominator of Eq. 2-6 (average emissions during test are less than 50 percent of the emission standard).

MPU00962

MSI/ Manitowoc PU
Test 2 Run 1
Sample Calculations

LB/mmBtu

Calculator		Equations - CFR 40, Part 60,Method 19
SO2 : Calculator		**SO2 : Equations**
SO2 ppm,w =	56.23	*19-7* Using the wet SO2 and CO2 numbers.
CO2 %,w =	13.06	Fc * 0.000000002595 * 64 *100 * SO2 ppm (wet) /CO2 % (wet)
F-factor (Fc) =	1805	
lb/million Btu =	0.129068258	
NOx : Calculator		**NOx : Equations**
NOx ppm,w =	65.88	*19-7* Using wet NOx and CO2 numbers:
CO2 %,w =	13.06	Fc * 0.000000002595 * 46 * 100 * NOx ppm (wet)/ CO2 % (wet)
F-factor (Fc) =	1805	
lb/million Btu =	0.108688304	

MPU00963