Interpoll Laboratories, Inc.
4500 Ball Road N.E.
Circle Pines, Minnesota 55014-1819

TEL: (763) 786-6020
FAX: (763) 786-7854

RESULTS OF THE JULY 29, 2014 RELATIVE ACCURACY TEST AUDIT OF THE $CO/SO_2/NO_x/CO_2$/FLOW CEM SYSTEM INSTALLED ON THE S20 STACK AT THE MANITOWOC PUBLIC UTILITIES FACILITY IN MANITOWOC, WISCONSIN

Submitted to:

Mechanical Systems Inc.
480 Progress Way
Sun Prairie, WI 53590

Attention:

Rocky Orzechowski

Reviewed by:

Kathleen Eickstadt
Coordinator
Source Testing

Report Number 14-33413 (S20)
August 21, 2014
KE/kce

TABLE OF CONTENTS

ABBREVIATIONS iii

1 INTRODUCTION 1

2 SUMMARY AND DISCUSSION 3

APPENDICES:

A - Sampling Train Calibration Data
B - Reference Computer Printouts
C - Field Data Sheets
D - Measurement System Performance Specifications
E - Calibration Gas Certification Sheets
F - Gas Analyzer Specifications
G - CEM Instrument Information Sheets
H - CEM Data
I - Procedures
J - Calculation Equations
K - AETB Requirements

ABBREVIATIONS

ACFM	actual cubic feet per minute
cc (ml)	cubic centimeter (milliliter)
DSCFM	dry standard cubic foot of dry gas per minute
DSML	dry standard milliliter
DEG-F (°F)	degrees Fahrenheit
DIA.	Diameter
FT/SEC	feet per second
g	gram
GPM	gallons per minute
GR/ACF	grains per actual cubic foot
GR/DSCF	grains per dry standard cubic foot
g/dscm	grams per dry standard meter
HP	horsepower
HRS	hours
IN.	inches
IN.HG.	inches of mercury
IN.WC.	inches of water
LB	pound
LB/DSCF	pounds per dry standard cubic foot
LB/HR	pounds per hour
LB/10^6BTU	pounds per million British Thermal Units heat input
LB/MMBTU	pounds per million British Thermal Units heat input
MW	megawatt
mg/dscm	milligrams per dry standard cubic meter
ug/dscm	micrograms per dry standard cubic meter
microns (um)	micrometer
MIN.	minutes
ng	nanograms
PM	particulate matter
PPH	pounds per hour
PPM	parts per million
ppmC	parts per million carbon
ppm,d	parts per million, dry
ppm,w	parts per million, wet
ppt	parts per trillion
PSI	pounds per square inch
SQ.FT.	square feet
TPD	tons per day
ug	micrograms
v/v	percent by volume
w/w	percent by weight

Standard conditions are defined as 68 °F (20 °C) and 29.92 IN. of mercury pressure

1 INTRODUCTION

On July 29, 2014, Interpoll Laboratories personnel conducted a Title 40, Part 75, $CO/SO_2/NO_x/CO_2$ and Flow Relative Accuracy Test Audit of the CEM System installed on the S20 Stack at the Manitowoc Public Utilities Facility in Manitowoc, Wisconsin. The following CEMs were tested:

Monitor Type	Manufacturer	Model	Serial No.	Location
NO_x	TECO	42i-d	0908635558	S20 Stack
SO_2	TECO	43i	0908635559	S20 Stack
CO_2	TECO	41i	0811429266	S20 Stack
CO	TECO	48i	08270019	S20 Stack
Flow	United Sciences	150	1500877	S20 Stack

On-site testing was performed by Aaron Wilson and Andrew Strong. Jim Fanning of Mechanical Systems, Inc. and Tim Harding of Manitowoc Public Utilities provided coordination between testing activities and plant operation. A representative of the Wisconsin DNR did not witness testing.

Carbon Monoxide, Sulfur Dioxide, Oxides of Nitrogen, and Carbon Dioxide evaluations were performed in accordance with EPA Methods 10, 3A, 6C, and 7E CFR Title 40, Part 60, Appendix A and Part 75. For oxygen analysis, a slipstream of sample gas was withdrawn from the exhaust gas stream using test ports (provided by the plant) on the stack adjacent to the CEMS using a heat-traced probe and filter assembly. After passing through the filter, the gas passed through two condenser-type moisture removal systems operating in series. The particulate-free dry gas was then transported to the oxygen analyzer with the excess exhausted to the atmosphere through a calibrated orifice, which was used to ensure that the flow from the stack exceeds the requirements of the analyzer. For SO_2, NO_x, CO and CO_2 analysis, a dilution probe based system was used. In this system a slipstream of exhaust gas is drawn from the exhaust gas stream using an M&C dilution probe. The sample stream is filtered and diluted (approximate dilution during these tests was 100:1) before delivery to the SO_2, NO_x, CO and CO_2 analyzers.

The test runs were performed by moving the sample probe through a three-point traverse (1/6, 3/6, 5/6 of the duct depth). The instruments were calibrated before and after the runs as per EPA Methods 3A,

MPU00155

6C, 10 and 7E using EPA Protocol 1 gases.

The reference method CO_2, SO_2, CO and NO_x concentrations were recorded using a computer datalogger. Copies of the computer printouts are included in this report.

Moisture determinations were performed psychometrically. Volumetric flow rate determinations were determined with a Type S pitot tube using EPA Method 2 and applying the default wall adjustment factor of 0.9900 for a brick lined stack according to Method 2H, section 2.2.2. Flow measurements were conducted from four test ports oriented at ninety degrees on the stack using a 16-point traverse. The flow rate monitor was certified at low and high load conditions.

The results of the CEM Relative Accuracy Test Audit are summarized in Section 2. Field data and all other supporting information are presented in the appendices.

MPU00156

2 SUMMARY AND DISCUSSION

The results of the Relative Accuracy Test Audit are summarized in the following tables. An overview of the results is presented below:

S20 STACK RELATIVE ACCURACY RESULTS

Parameter	Units	Measured
NO_x	LB/10^6BTU	7.11
NO_x	ppm,w	4.13
SO_2	ppm,w	1.18
SO_2	LB/10^6BTU	3.12
CO_2	% v/v,w	2.86
CO	ppm,w	2.99
CO	LB/10^6BTU	4.49
Flow (LOW)	SCFH	1.68
Flow (HIGH)	SCFH	2.39

No difficulties were encountered in the field or in the evaluation of the data. On the basis of these facts and a complete review of the data and results, it is our opinion that the CO_2, SO_2 and NO_x concentrations reported herein are accurate and closely reflect the actual values, which existed at the time the test was performed.

MPU00157

Summary of the Results of the July 29,2014, Relative Accuracy Test Audit of the NOx Analyzer Installed on the S20 Boiler Stack at the Manitowoc Public Utilities Plant located in Manitowoc, Wisconsin.

Low "Normal" Load (80 Klbs/Hr)

				Nox Lbs/mmBTU		
Run		**Date**	**Time**	**RM**	**CEM**	**DIFF.**
1		07/29/14	0:25 - 0:45	0.080	0.074	0.006
2	*	07/29/14	0:55 - 1:15	0.079	0.073	0.006
3		07/29/14	1:25 - 1:45	0.080	0.074	0.006
4		07/29/14	1:55 - 2:15	0.078	0.072	0.006
5		07/29/14	2:25 - 2:45	0.072	0.068	0.004
6		07/29/14	2:55 - 3:15	0.071	0.068	0.003
7		07/29/14	3:25 - 3:45	0.080	0.077	0.003
8		07/29/14	3:55 - 4:15	0.070	0.069	0.001
9		07/29/14	4:25 - 4:45	0.071	0.067	0.004
10		07/29/14	4:55 - 5:15	0.072	0.069	0.003
Average Diff.				0.075	0.071	0.004000
Standard Deviation						0.002
Confidence Coefficient						0.001
Relative Accuracy						7.11
Bias Test						Fail
Bias Adjustment Factor						1.056

* Run was not used in Relative Accuracy calculation

RM = Reference Method

CEM = Continuous Emission Monitor

Summary of the Results of the July 29,2014, Relative Accuracy Test Audit of the NOx Analyzer Installed on the S20 Boiler Stack at the Manitowoc Public Utilities Plant located in Manitowoc, Wisconsin.

Low "Normal" Load (80 Klbs/Hr)

				Nox ppm, wet		
Run		**Date**	**Time**	**RM**	**CEM**	**DIFF.**
1		07/29/14	0:25 - 0:45	20.5	19.5	1.0
2	*	07/29/14	0:55 - 1:15	20.4	19.6	0.8
3		07/29/14	1:25 - 1:45	20.3	19.5	0.8
4		07/29/14	1:55 - 2:15	19.9	19.0	0.9
5		07/29/14	2:25 - 2:45	18.8	18.2	0.6
6		07/29/14	2:55 - 3:15	18.8	18.2	0.6
7		07/29/14	3:25 - 3:45	20.5	20.1	0.4
8		07/29/14	3:55 - 4:15	18.2	18.1	0.1
9		07/29/14	4:25 - 4:45	18.7	17.9	0.8
10		07/29/14	4:55 - 5:15	18.7	18.3	0.4
Average Diff.				19.367	18.767	0.600
Standard Deviation						0.260
Confidence Coefficient						0.200
Relative Accuracy						4.13
Bias Test						Fail
Bias Adjustment Factor						1.032

* Run was not used in Relative Accuracy calculation

RM = Reference Method

CEM = Continuous Emission Monitor

Summary of the Results of the July 29,2014, Relative Accuracy Test Audit of the SO2 Analyzer Installed on the S20 Boiler Stack at the Manitowoc Public Utilities Plant located in Manitowoc, Wisconsin.

Low "Normal" Load (80 Klbs/Hr)

				SO_2 ppm, wet		
Run	**Date**	**Time**		**RM**	**CEM**	**DIFF.**
1	07/29/14	0:25 - 0:45		49.2	50.4	-1.2
2	07/29/14	0:55 - 1:15		50.9	55.5	-4.6
3	07/29/14	1:25 - 1:45		41.2	41.7	-0.5
4	07/29/14	1:55 - 2:15		52.3	52.3	0.0
5	07/29/14	2:25 - 2:45		53.5	53.3	0.2
6	07/29/14	2:55 - 3:15		49.0	49.8	-0.8
7	07/29/14	3:25 - 3:45		34.0	33.9	0.1
8	07/29/14	3:55 - 4:15		51.5	51.1	0.4
9	07/29/14	4:25 - 4:45		50.7	50.1	0.6
10	* 07/29/14	4:55 - 5:15		48.6	48.3	0.3
Average Diff.				47.778	47.878	-0.100000
Standard Deviation						0.602
Confidence Coefficient						0.463
Relative Accuracy						1.18
Bias Test						Pass
Bias Adjustment Factor						0.998

* Run was not used in Relative Accuracy calculation

RM = Reference Method

CEM = Continuous Emission Monitor

Summary of the Results of the July 29,2014, Relative Accuracy Test Audit of the SO2 Analyzer Installed on the S20 Boiler Stack at the Manitowoc Public Utilities Plant located in Manitowoc, Wisconsin.

Low "Normal" Load (80 Klbs/Hr)

					SO_2 Lbs/mmBTU		
Run		**Date**	**Time**		**RM**	**CEM**	**DIFF.**
1		07/29/14	0:25 -	0:45	0.266	0.266	0.000
2		07/29/14	0:55 -	1:15	0.275	0.289	-0.014
3		07/29/14	1:25 -	1:45	0.224	0.219	0.005
4	*	07/29/14	1:55 -	2:15	0.285	0.275	0.010
5		07/29/14	2:25 -	2:45	0.284	0.276	0.008
6		07/29/14	2:55 -	3:15	0.257	0.258	-0.001
7		07/29/14	3:25 -	3:45	0.184	0.181	0.003
8		07/29/14	3:55 -	4:15	0.274	0.270	0.004
9		07/29/14	4:25 -	4:45	0.269	0.262	0.007
10		07/29/14	4:55 -	5:15	0.260	0.251	0.009
Average Diff.					0.256	0.251	0.005000
Standard Deviation							0.004
Confidence Coefficient							0.003
Relative Accuracy							3.12
Bias Test							Fail
Bias Adjustment Factor							1.020

* Run was not used in Relative Accuracy calculation

RM = Reference Method

CEM = Continuous Emission Monitor

Summary of the Results of the July 29,2014, Relative Accuracy Test Audit on the CO2 Analyzer Installed on the S20 Boiler Stack at the Manitowoc Public Utilities Plant located in Manitowoc, Wisconsin.

Low "Normal" Load (80 Klbs/Hr)

					CO_2, wet Summary		
Run		**Date**	**Time**		**RM**	**CEM**	**DIFF.**
1		07/29/14	0:25 -	0:45	5.8	5.9	-0.1
2		07/29/14	0:55 -	1:15	5.8	6.0	-0.2
3		07/29/14	1:25 -	1:45	5.7	5.9	-0.2
4		07/29/14	1:55 -	2:15	5.7	5.9	-0.2
5		07/29/14	2:25 -	2:45	5.9	6.0	-0.1
6		07/29/14	2:55 -	3:15	6.0	6.0	0.0
7		07/29/14	3:25 -	3:45	5.8	5.8	0.0
8		07/29/14	3:55 -	4:15	5.9	5.9	0.0
9		07/29/14	4:25 -	4:45	5.9	6.0	-0.1
10	*	07/29/14	4:55 -	5:15	5.8	6.0	-0.2
Average Difference					5.833	5.933	-0.10000
Standard Deviation							0.087
Confidence Coefficient							0.067
Relative Accuracy							2.86
Bias Test							Pass
Bias Adjustment Factor							0.983

* Run was not used in Relative Accuracy calculation

RM = Reference Method

CEM = Continuous Emission Monitor

Summary of the Results of the July 29,2014, Relative Accuracy Test Audit of the CO Analyzer Installed on the S20 Boiler Stack at the Manitowoc Public Utilities Plant located in Manitowoc, Wisconsin.

Low "Normal" Load (80 Klbs/Hr)

			CO ppm, wet		
Run	**Date**	**Time**	**RM**	**CEM**	**DIFF.**
1	07/29/14	0:25 - 0:45	29.9	29.3	0.6
2	07/29/14	0:55 - 1:15	30.2	31.1	-0.9
3	07/29/14	1:25 - 1:45	29.2	28.1	1.1
4	07/29/14	1:55 - 2:15	29.9	28.8	1.1
5	07/29/14	2:25 - 2:45	29.3	28.5	0.8
6	07/29/14	2:55 - 3:15	29.5	29.3	0.2
7	07/29/14	3:25 - 3:45	27.2	26.3	0.9
8	07/29/14	3:55 - 4:15	27.7	27.2	0.5
9	07/29/14	4:25 - 4:45	26.8	26.4	0.4
10 *	07/29/14	4:55 - 5:15	28.0	28.8	-0.8
Average Diff.			28.722	28.411	0.311111
Standard Deviation					0.711
Confidence Coefficient					0.547
Relative Accuracy					2.99
Bias Test					Pass
Bias Adjustment Factor					1.011

* Run was not used in Relative Accuracy calculation

RM = Reference Method

CEM = Continuous Emission Monitor

Summary of the Results of the July 29,2014, Relative Accuracy Test Audit of the CO Analyzer Installed on the S20 Boiler Stack at the Manitowoc Public Utilities Plant located in Manitowoc, Wisconsin.

Low "Normal" Load (80 Klbs/Hr)

				CO Lbs/mmBTU		
Run		**Date**	**Time**	**RM**	**CEM**	**DIFF.**
1		07/29/14	0:25 - 0:45	0.071	0.068	0.000
2		07/29/14	0:55 - 1:15	0.072	0.071	-0.014
3		07/29/14	1:25 - 1:45	0.069	0.065	0.005
4	*	07/29/14	1:55 - 2:15	0.071	0.066	0.010
5		07/29/14	2:25 - 2:45	0.068	0.065	0.008
6		07/29/14	2:55 - 3:15	0.068	0.066	-0.001
7		07/29/14	3:25 - 3:45	0.064	0.062	0.003
8		07/29/14	3:55 - 4:15	0.064	0.063	0.004
9		07/29/14	4:25 - 4:45	0.062	0.060	0.007
10		07/29/14	4:55 - 5:15	0.065	0.066	0.009
Average Diff.				0.067	0.065	0.001889
Standard Deviation						0.001
Confidence Coefficient						0.001
Relative Accuracy						4.49
Bias Test						Fail
Bias Adjustment Factor						1.029

* Run was not used in Relative Accuracy calculation

RM = Reference Method

CEM = Continuous Emission Monitor

Summary of the Results of the July 29,2014, Relative Accuracy Test Audit on the Flow Analyzer Installed on the S20 Boiler Stack at the Manitowoc Public Utilities Plant located in Manitowoc, Wisconsin.

Low "Normal" Load (80 Klbs/Hr)

				Flow (SCFH) Summary		
Run		**Date**	**Time**	**RM**	**CEM**	**DIFF.**
1		07/29/14	0:25 - 0:31	3,604,000	3,558,000	46,000
2		07/29/14	0:55 - 1:01	3,588,000	3,575,000	13,000
3	*	07/29/14	1:25 - 1:31	3,622,000	3,485,000	137,000
4		07/29/14	1:55 - 2:01	3,535,000	3,469,000	66,000
5		07/29/14	2:25 - 2:31	3,462,000	3,382,000	80,000
6		07/29/14	2:55 - 3:01	3,404,000	3,473,000	-69,000
7		07/29/14	3:25 - 3:31	3,493,000	3,512,000	-19,000
8		07/29/14	3:55 - 4:01	3,464,000	3,462,000	2,000
9		07/29/14	4:25 - 4:31	3,495,000	3,455,000	40,000
10		07/29/14	4:55 - 5:01	3,502,000	3,453,000	49,000
Average Difference				3505222.222	3482111.111	23111.11111
Standard Deviation						46584.451
Confidence Coefficient						35807.915
Relative Accuracy						1.68
Bias Test						Pass
Bias Adjustment Factor						1.007

* Run was not used in Relative Accuracy calculation

RM = Reference Method

CEM = Continuous Emission Monitor

Results of the July 29th, 2014 Relative Accuracy Test Audit of the Flow Analyzer Installed on the S20 Boiler Stack at the Manitowoc Public Utilities Plant located in Manitowoc, Wisconsin.

High Load (190 Klbs/Hr)

			Flow (SCFH)		
Run	**Date**	**Time**	**RM**	**CEM**	**DIFF.**
1	07/29/14	6:30 - 6:36	4,951,000	5,075,000	-124,000
2	07/29/14	6:37 - 6:43	5,011,000	5,144,000	-133,000
3	07/29/14	6:44 - 6:50	5,102,000	5,267,000	-165,000
4	07/29/14	7:00 - 7:06	5,016,000	5,195,000	-179,000
5	07/29/14	7:07 - 7:13	5,128,000	5,174,000	-46,000
6	07/29/14	7:14 - 7:20	5,114,000	5,112,000	2,000
7	* 07/29/14	7:21 - 7:27	5,060,000	5,116,000	-56,000
8	07/29/14	7:28 - 7:34	5,148,000	5,113,000	35,000
9	07/29/14	7:35 - 7:41	5,148,000	5,170,000	-22,000
10	07/29/14	7:42 - 0:00	5,040,000	5,154,000	-114,000
Average Diff.			5078000.000	5147222.222	-69222.222
Confidence Coefficient					52363.604666
Standard Deviation					68122.643
Relative Accuracy					2.39
Bias Test					Pass
Bias Adjustment Factor					0.987

* Run was not used in Relative Accuracy calculation

RM = Reference Method

CEM = Continuous Emission Monitor

APPENDIX A

SAMPLING TRAIN CALIBRATION DATA

INTERPOLL LABORATORIES, INC.
(763) 786-6020

Stack Sampling Department - QA
Field Barometer Calibration Sheet

Date:	4/5/2014
Technician:	Aaron Wilson
Mercury Column Barometer Number:	Weighing Room Barometer
Aneroid Barometer Number:	Ultimeter #3

Reference Mercury Barometer Reading	Ambient Temperature	Temperature Correction Factor	Adjusted Mercury Barometer Reading	Initial Field Barometer Reading	Difference (P_{ba} - P_{bm})
29.27	76	0.124	29.15	29.13	-0.020

Weighing room barometer setup:

1) Using the set screw on the bottom of the barometer, adjust the level of the mercury reservoir to the point that the level indicator makes slight contact with the mercury. A flashlight can aid in seeing the dimple formed when the level indicator makes contact with the mercury.

2) Slide the measurement ruler on the barometer to the point where the bottom of the ruler is in line with the top of the mercury column's reverse meniscus. Record the reading (in. Hg)

3) Take a temperature reading and record the temperature correction factor from the lookup table near the barometer.

4) Apply the temperature correction factor to the mercury barometer.

5) Adjust the field barometer reading to within +/- 0.1 in. Hg of the reference barometer reading.

Has this barometer shown any consistent problems with calibration? Has the problem been alleviated?_____

Note: Aneroid barometers will be calibrated periodically against a mercury column barometer. The aneroid barometer to be calibrated should be placed in close proximity to the mercury barometer and left to equilibrate for 20 - 30 minutes before calibrating. Aneroid barometer will be calibrated to the adjusted mercury barometer readings.

Alternative Calibration Procedure:

1) Obtain the station value or absolute barometric pressure Pr from a nearby National Weather Service station and its elevation (A) in feet above sea level.
2) Determine the elevation (B) in feet above sea level of the site of the field barometer.(local airport)
3) Calculate the site barometric pressure (Pb) as follows:

$$Pb = Pr + 0.001\ (A-B)$$

4) Compare the field barometer reading against Pb obtained in step 3.
5) Adjust the field barometer reading to within +/- 0.1 in. Hg.

MPU00168

INTERPOLL LABORATORIES, INC.
(763) 786-6020

Temperature Measurement Device Calibration Sheet

Unit under Test:

Vendor	SIGNSTEK	Serial Number	T378538
Model	6802II	Thermocouple Type	Type K
Range	0-2100	Technician	C. Warneke
Date of Calibration	7/3/2014	PDT Number	151 / T1

Method of Calibration:

Omega Model CL-300 Type K Thermocouple Simulator which provides 22 precise temperature equivalent millivolt signals. The CL-300 is cold junction compensated. Calibration accuracy is +/- 0.1 % of span(2100 °F) +/- 1 degree (for negative temperatures add +/- 2 degrees). The CL-300 simulated exactly the millivoltage of a Type K thermocouple at the indicated temperature.

Desired Temp. (°F) Nominal	Response of Unit Under Test (°F)	Deviation	
		Δt (°F)	%
0	-2	2	0.435
100	97	3	0.536
200	199	1	0.152
300	297	3	0.395
400	397	3	0.349
500	498	2	0.208
600	600	0	0.000
700	699	1	0.086
800	801	1	0.079
900	899	1	0.074
1000	1001	1	0.068
1100	1100	0	0.000
1200	1199	1	0.060
1300	1300	0	0.000
1400	1400	0	0.000
1500	1500	0	0.000
1600	1600	0	0.000
1700	1699	1	0.046
1800	1800	0	0.000
1900	1898	2	0.085
2000	1999	1	0.041
2100	2097	3	0.117
	Average:	**1**	**0.124**

ND= no data available
OF = off scale response by unit under test (°F)

% dev = 100Δt/(460+t)

■ **Unit was in tolerance**
(Must be within +/- 1.5% absolute reference temperature)

☐ **Unit was not in tolerance : Recalibrated see new calibration sheet or unit put out of service.**

INTERPOLL LABORATORIES, INC.
(763) 786-6020

Temperature Measurement Device Calibration Sheet

Unit under Test:

Vendor	CEN-TECH	Serial Number	5184628
Model	92242	Thermocouple Type	Type K
Range	0-1900	Technician	A Wilson
Date of Calibration	4/21/2014	PDT Number	131

Method of Calibration:

Omega Model CL-300 Type K Thermocouple Simulator which provides 22 precise temperature equivalent millivolt signals. The CL-300 is cold junction compensated. Calibration accuracy is +/- 0.1 % of span(2100 °F) +/- 1 degree (for negative temperatures add +/- 2 degrees). The CL-300 simulated exactly the millivoltage of a Type K thermocouple at the indicated temperature.

Desired Temp. (°F) Nominal	Response of Unit Under Test (°F)	Deviation	
		Δ t (°F)	%
0	2	2	0.435
100	100	0	0.000
200	204	4	0.606
300	302	2	0.263
400	400	0	0.000
500	498	2	0.208
600	601	1	0.094
700	698	2	0.172
800	801	1	0.079
900	898	2	0.147
1000	1001	1	0.068
1100	1101	1	0.064
1200	1201	1	0.060
1300	1301	1	0.057
1400	1401	1	0.054
1500	1501	1	0.051
1600	1601	1	0.049
1700	1698	2	0.093
1800	1798	2	0.088
1900	1898	2	0.085
2000	OF		
2100	OF		
	Average:	**1**	**0.134**

ND= no data available
OF = off scale response by unit under test (°F)

% dev = 100Δt/(460+t)

☐ **Unit was in tolerance**
(Must be within +/- 1.5% absolute reference temperature)

☐ **Unit was not in tolerance : Recalibrated see new calibration sheet or unit put out of service.**

Environmental Supply Company, Inc.

Quality Source Sampling Systems & Accessories

Wind Tunnel Pitot Calibration

Customer:	**Interpoll Laboratories**		
S-type Pitot ID:	**04-5+P1**	Date:	**1-Apr-13**
Standard Pitot ID:	**001**	Personnel:	**DH**
Cp(std):	**0.99**	Cp(actual):	**0.831**
Part Number:		P(bar):	**29.35**
Test Velocity (fps):	**30 - 60 - 90**	T(°F):	**56**

Calibration Results

Velocity (fps)	Nominal ΔPs [inches H_2O]	$Cp_{(s)}$ A-Side	$Cp_{(s)}$ B-Side	$Cp_{(s)}$ Average
30	0.284	0.834	0.836	0.835
60	1.142	0.825	0.833	0.829
90	2.623	0.824	0.833	0.828
			Overall Average	0.831

Pitot tube S/N 04-5+P1 was calibrated in accordance with the Code of Federal Regulations, Title 40, Part 60 Appendix A, Method 2, Section 10.

Signature

4/1/13
Date

708 E. Club Blvd., Durham, North Carolina 27704 www.environsupply.com 919-956-9688 FAX: 919-682-0333

S-Type Pitot (S/N 04-5+P1) - Pitot Coefficient (Cp) vs Velocity (fps)

Environmental Supply Company Wind Tunnel - 04/01/2013

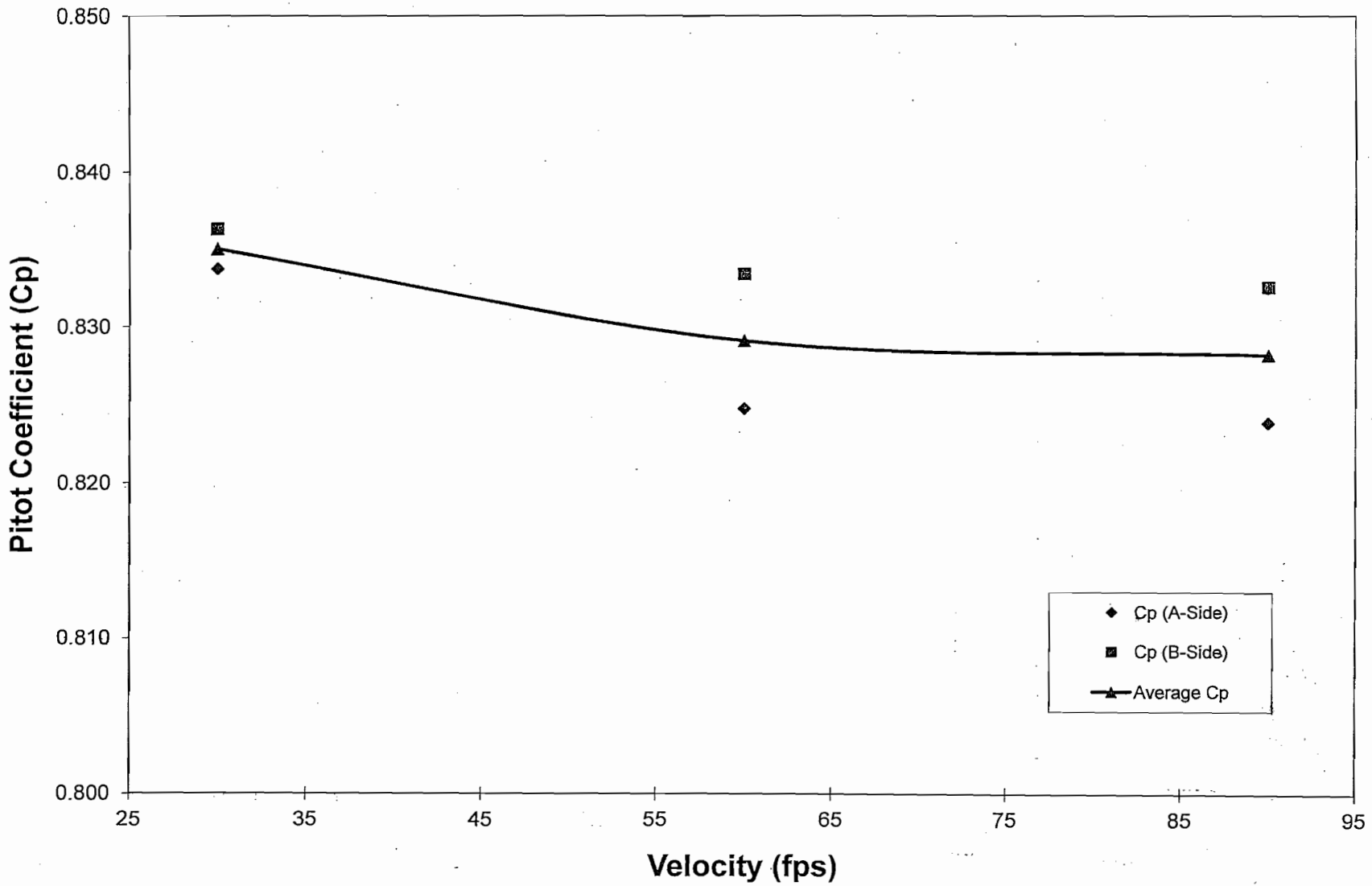

Environmental Supply Company, Inc.

Quality Source Sampling Systems & Accessories

Wind Tunnel Pitot Calibration

S-type Pitot ID:	**04-5+P1**	Date:	**1-Apr-13**
Standard Pitot ID:	**001**	Personnel:	**DH**
Cp(std):	**0.99**	Cp(actual):	**0.835**
Part Number:		P(bar):	**29.35**
Test Velocity (fps):	**30**	T(°F):	**56**

A-SIDE

ΔP_{std} (in. H_2O)	ΔP_s (in. H_2O)	Cp(s)	Deviation*
0.202	**0.283**	**0.837**	0.003
0.202	**0.285**	**0.834**	0.000
0.202	**0.286**	**0.831**	-0.003
0.201	**0.285**	**0.833**	-0.001
	AVERAGE	**0.834**	0.002
		Std deviation	0.003

B-SIDE

ΔP_{std} (in. H_2O)	ΔP_s (in. H_2O)	Cp(s)	Deviation*
0.202	**0.282**	**0.839**	0.003
0.202	**0.283**	**0.836**	0.000
0.202	**0.284**	**0.835**	-0.002
0.201	**0.283**	**0.835**	-0.001
	AVERAGE	**0.836**	0.001
		Std deviation	0.002

$$Cp(s) = Cp(std)\sqrt{\frac{\Delta P(std)}{\Delta P(s)}}$$

Cp(A) - Cp(B) = 0.003 {must be <0.010}

*Deviation = {Cp(s) - *AVG* Cp(s)} {must be <0.010}

Standard deviation of the deviations must be less than 0.02 for both

Pitot tube S/N 04-5+P1 was calibrated in accordance with the CFR 40, Part 60 Appendix A, Method 2, Section 10.

Wind Tunnel Pitot Calibration

S-type Pitot ID:	**04-5+P1**	Date:	**1-Apr-13**
Standard Pitot ID:	**001**	Personnel:	**DH**
Cp(std):	**0.99**	Cp(actual):	**0.829**
Part Number:		P(bar):	**29.35**
Test Velocity (fps):	**60**	T(°F):	**56**

A-SIDE

ΔP_{std} (in. H_2O)	ΔP_s (in. H_2O)	Cp(s)	Deviation*
0.799	**1.154**	**0.824**	-0.001
0.803	**1.153**	**0.827**	0.002
0.800	**1.152**	**0.825**	0.000
0.802	**1.159**	**0.824**	-0.001
	AVERAGE	**0.825**	0.001
		Std deviation	0.001

B-SIDE

ΔP_{std} (in. H_2O)	ΔP_s (in. H_2O)	Cp(s)	Deviation*
0.799	**1.132**	**0.832**	-0.002
0.803	**1.129**	**0.835**	0.002
0.800	**1.130**	**0.833**	0.000
0.802	**1.131**	**0.834**	0.000
	AVERAGE	**0.833**	0.001
		Std deviation	0.001

$$Cp(s) = Cp(std)\sqrt{\frac{\Delta P(std)}{\Delta P(s)}}$$

Cp(A) - Cp(B) = 0.009 {must be <0.010}

*Deviation = {Cp(s) - *AVG* Cp(s)} {must be <0.010}

Standard deviation of the deviations must be less than 0.02 for both

Pitot tube S/N 04-5+P1 was calibrated in accordance with the CFR 40, Part 60 Appendix A, Method 2, Section 10.

Wind Tunnel Pitot Calibration

S-type Pitot ID:	**04-5+P1**	Date:	**1-Apr-13**
Standard Pitot ID:	**001**	Personnel:	**DH**
Cp(std):	**0.99**	Cp(actual):	**0.828**
Part Number:		P(bar):	**29.35**
Test Velocity (fps):	**90**	T(°F):	**56**

A-SIDE

ΔP_{std} (in. H_2O)	ΔP_s (in. H_2O)	Cp(s)	Deviation*
1.837	**2.657**	**0.823**	-0.001
1.836	**2.652**	**0.824**	0.000
1.832	**2.642**	**0.824**	0.001
1.837	**2.651**	**0.824**	0.000
	AVERAGE	**0.824**	0.000
		Std deviation	0.001

B-SIDE

ΔP_{std} (in. H_2O)	ΔP_s (in. H_2O)	Cp(s)	Deviation*
1.837	**2.603**	**0.832**	-0.001
1.836	**2.594**	**0.833**	0.000
1.832	**2.588**	**0.833**	0.000
1.837	**2.597**	**0.833**	0.000
	AVERAGE	**0.833**	0.000
		Std deviation	0.001

$$Cp(s) = Cp(std)\sqrt{\frac{\Delta P(std)}{\Delta P(s)}}$$

Cp(A) - Cp(B) = 0.009 {must be <0.010}

*Deviation = {Cp(s) - *AVG* Cp(s)} {must be <0.010}

Standard deviation of the deviations must be less than 0.02 for both

Pitot tube S/N 04-5+P1 was calibrated in accordance with the CFR 40, Part 60 Appendix A, Method 2, Section 10.

APPENDIX B

REFERENCE METHOD COMPUTER PRINTOUTS

LOW LOAD

MPU00177

MSI / Manitowoc PU
Manitowoc, WI
S20 Boiler Stack

7/29/2014
Test 1L Run 1
Low "Normal" Load (80 Klbs/Hr)

Volumetric Flow Rate Data

Number of Sample Points 16

Point Number		Delta p	Sq. root delta p	Temperature	Time
1	A-1	0.017	0.130	198	12:25 AM
2	A-2	0.015	0.122	198	
3	A-3	0.014	0.118	198	
4	A-4	0.018	0.134	198	
5	B-1	0.018	0.134	198	
6	B-2	0.020	0.141	198	
7	B-3	0.024	0.155	198	
8	B-4	0.022	0.148	198	
9	C-1	0.020	0.141	198	
10	C-2	0.024	0.155	198	
11	C-3	0.024	0.155	198	
12	C-4	0.023	0.152	198	
13	D-1	0.015	0.122	198	
14	D-2	0.019	0.138	198	
15	D-3	0.017	0.130	198	
16	D-4	0.014	0.118	198	12:31 AM
Average		0.0190	0.137	198	

Moisture Content Data		Flow Rate Data	
Dry Bulb (°F)	198		
Wet Bulb (°F)	109.0	Static Pressure	-0.43
TRA	1.18	Pitot Coefficient	0.813
Vapor Pressure of Water	2.52		
ZT	89.00	Duct Width (in.)	0.0
PM	158.27	Duct Length (in.)	0.0
Barometric Pressure	29.04	Duct Area (ft^2)	0.0
		Stack Diameter (in.)	168.0
		Stack Area (ft^2)	153.938
Moisture Content	5.46		
		Molecular Weight (dry)	29.58
O_2 %	15.092	Molecular Weight (wet)	28.948
CO_2 %	6.102	Stack Pressure	29.008
		Feet per Second	8.36
Standard CFH	3,604,406	Actual CFM	77216.92
K Standard CFH	60.073	DSCFM	56795.86

Field Calculations

Raw Data Table

Instrument	ppm or %	Zero	Span	Cylinder Value	Gas Corrected for Calibration
O_2 (dry)	15.06	0.10	11.10	11.10	**15.09**
CO_2 (wet)	5.88	0.03	8.51	8.36	**5.77**
NOx (wet)	20.41	0.02	48.67	49.00	**20.54**
SO_2 (wet)	49.03	0.04	49.21	49.40	**49.23**
CO (wet)	29.856	0.05	50.32	50.40	**29.88**

Moisture	5.46	**Standard CFH**	3,604,406
Fuel Factor	1877	K Standard CFM	60.073
DSCFM	56796		

Results

Gases Start	**12:25 AM**	**Flow Start**	**12:25 AM**
Gases Stop	**12:45 AM**	**Flow Stop**	**12:31 AM**
CO_2 %, wet	**5.8**		
NOX ppm, wet	**20.5**		
NOx LB/mmBTU	**0.080**		
SO_2 ppm, wet	**49.2**		
SO_2 LB/mmBTU	**0.266**		
CO ppm, wet	**29.9**		
CO LB/mmBTU	**0.071**		
Standard CFH	**3,604,000**		

MSI / Manitowoc PU
Manitowoc, WI
S20 Boiler Stack
7/29/2014
Run 1

Time	SO_2 ppm, w	Nox ppm, w	$\%O_2$, d	% CO_2, w	CO ppm, w
0:25	44.615716	23.423636	15.44319	5.54706	27.42504
0:26	45.279448	21.249718	15.32424	6.335977	27.20712
0:27	48.296036	23.222354	14.26084	5.436724	30.98544
0:28	45.60058	20.705282	15.12687	6.081049	29.31456
0:29	46.76538	18.79535	14.87334	5.834554	29.60184
0:30	47.392456	20.431352	15.10604	5.113417	29.09256
0:31	45.866744	18.914976	15.19536	5.805095	28.15243
0:32	48.271484	20.403378	14.96836	5.792923	30.25166
0:33	51.85888	22.116272	14.83639	5.194862	29.23392
0:34	48.262652	18.42627	15.22977	6.175179	30.03029
0:35	52.179444	20.190468	14.83654	6.343105	31.19285
0:36	49.244728	17.978726	14.95248	4.944071	30.47501
0:37	49.455036	18.639572	15.22682	5.91989	29.16408
0:38	52.792776	22.356208	14.80875	6.934086	31.54272
0:39	49.170268	17.646456	15.13126	6.026454	30.54211
0:40	52.762248	21.218608	14.80233	5.892755	30.62184
0:41	53.328816	22.265272	15.1447	6.233057	29.82034
0:42	50.417144	18.576316	14.98862	6.159158	31.26058
0:43	51.29186	22.140754	15.73511	6.117677	30.10906
0:44	51.5771	21.215764	14.9963	5.402654	31.05922
0:45	45.27392	18.66452	15.19126	6.238478	29.88758
Average	**49.033**	**20.409**	**15.056**	**5.882**	**29.856**

MSI / Manitowoc PU
Manitowoc, WI
S20 Boiler Stack

7/29/2014
Test 1L Run 2
Low "Normal" Load (80 Klbs/Hr)

Volumetric Flow Rate Data

Number of Sample Points 16

Point Number		Delta p	Sq. root delta p	Temperature	Time
1	A-1	0.017	0.130	196	12:55 AM
2	A-2	0.016	0.126	196	
3	A-3	0.015	0.122	196	
4	A-4	0.015	0.122	196	
5	B-1	0.018	0.134	196	
6	B-2	0.021	0.145	196	
7	B-3	0.022	0.148	196	
8	B-4	0.023	0.152	196	
9	C-1	0.019	0.138	196	
10	C-2	0.023	0.152	196	
11	C-3	0.024	0.155	196	
12	C-4	0.023	0.152	196	
13	D-1	0.015	0.122	196	
14	D-2	0.018	0.134	196	
15	D-3	0.017	0.130	196	
16	D-4	0.014	0.118	196	1:01 AM
Average		0.0188	0.136	196	

Moisture Content Data		Flow Rate Data	
Dry Bulb (°F)	196		
Wet Bulb (°F)	109.0	Static Pressure	-0.43
TRA	1.18	Pitot Coefficient	0.813
Vapor Pressure of Water	2.52		
ZT	87.00	Duct Width (in.)	0.00
PM	160.38	Duct Length (in.)	0.00
Barometric Pressure	29.04	Duct Area (ft^2)	0.00
		Stack Diameter (in.)	168.00
		Stack Area (ft^2)	153.94
Moisture Content	5.53		
		Molecular Weight (dry)	29.577
O_2 %	15.029	Molecular Weight (wet)	28.937
CO_2 %	6.1	Stack Pressure	29.008
		Feet per Second	8.297
Standard CFH	3,587,892	Actual CFM	76629.53
K Standard CFH	59.798	DSCFM	56492.11

Field Calculations

Raw Data Table

Instrument	ppm or %	Zero	Span	Cylinder Value	Gas Corrected for Calibration
O_2 (dry)	14.97	0.14	11.10	11.10	**15.03**
CO_2 (wet)	5.88	0.04	8.51	8.36	**5.76**
NOx (wet)	20.09	0.04	48.32	49.00	**20.35**
SO_2 (wet)	50.74	0.04	49.28	49.40	**50.87**
CO (wet)	30.135	0.04	50.25	50.40	**30.21**
Moisture	5.53		**Standard CFH**		**3,587,892**
Fuel Factor	1877		K Standard CFM		59.798
DSCFM	56492				

Results

Gases Start	**12:55 AM**	**Flow Start**	**12:55 AM**
Gases Stop	**1:15 AM**	**Flow Stop**	**1:01 AM**
CO_2 %, wet	**5.8**		
NOX ppm, wet	**20.4**		
NOx LB/mmBTU	**0.079**		
SO_2 ppm, wet	**50.9**		
SO_2 LB/mmBTU	**0.275**		
CO ppm, wet	**30.2**		
CO LB/mmBTU	**0.072**		
Standard CFH	**3,588,000**		

MSI / Manitowoc PU
Manitowoc, WI
S20 Boiler Stack
7/29/2014
Run 2

Time	SO_2 ppm, w	Nox ppm, w	$\%O_2$, d	% CO_2, w	CO ppm, w
0:55	58.03046	19.753498	15.53578	5.842377	29.46933
0:56	60.198412	20.328006	15.21742	5.81855	30.286125
0:57	61.079596	21.408658	14.49384	5.799633	31.973805
0:58	62.506792	18.723404	14.87106	5.834905	31.83885
0:59	56.192828	18.079222	14.67863	5.841857	30.70062
1:00	50.315448	20.955078	14.99602	5.84724	31.31892
1:01	52.390004	21.767914	14.66105	5.819624	31.84434
1:02	47.948108	20.692814	14.52195	5.835685	29.750895
1:03	44.847492	19.633884	14.70261	6.139698	30.70062
1:04	45.1268	20.571346	15.17743	6.159359	28.176165
1:05	44.8167	20.891144	14.91714	5.838423	30.02022
1:06	47.59522	21.531256	15.00157	5.849782	30.15513
1:07	41.469456	18.636088	15.08655	5.82145	28.9359
1:08	46.101244	20.98374	15.522	5.842328	28.18008
1:09	46.974204	18.755626	15.34108	5.818444	29.419425
1:10	48.532464	19.601202	15.00827	5.820493	28.53594
1:11	50.671844	19.360876	14.87893	5.816905	29.95407
1:12	49.143232	20.539092	14.7587	5.830588	30.09213
1:13	49.43278	18.696698	15.36413	6.209339	30.09087
1:14	50.601964	19.12022	14.86006	5.830559	30.28869
1:15	51.514548	21.797436	14.87106	5.829401	31.10616
Average	**50.738**	**20.087**	**14.975**	**5.878**	**30.135**

MSI / Manitowoc PU
Manitowoc, WI
S20 Boiler Stack

7/29/2014
Test 1L Run 3
Low "Normal" Load (80 Klbs/Hr)

Volumetric Flow Rate Data

Number of Sample Points 16

Point Number		Delta p	Sq. root delta p	Temperature	Time
1	A-1	0.016	0.126	196	1:25 AM
2	A-2	0.017	0.130	196	
3	A-3	0.015	0.122	196	
4	A-4	0.015	0.122	196	
5	B-1	0.019	0.138	196	
6	B-2	0.022	0.148	196	
7	B-3	0.022	0.148	196	
8	B-4	0.024	0.155	196	
9	C-1	0.019	0.138	197	
10	C-2	0.023	0.152	197	
11	C-3	0.024	0.155	197	
12	C-4	0.023	0.152	197	
13	D-1	0.016	0.126	197	
14	D-2	0.018	0.134	197	
15	D-3	0.018	0.134	197	
16	D-4	0.015	0.122	197	1:31 AM
Average		0.0191	0.138	197	

Moisture Content Data	
Dry Bulb (°F)	197
Wet Bulb (°F)	108.0
TRA	1.18
Vapor Pressure of Water	2.45
ZT	88.50
PM	151.57
Barometric Pressure	29.04
Moisture Content	5.23
O_2 %	14.82
CO_2 %	6.047
Standard CFH	3,621,926
K Standard CFH	60.365

Flow Rate Data	
Static Pressure	-0.44
Pitot Coefficient	0.813
Duct Width (in.)	0.00
Duct Length (in.)	0.00
Duct Area (ft^2)	0.00
Stack Diameter (in.)	168.00
Stack Area (ft^2)	153.94
Molecular Weight (dry)	29.56
Molecular Weight (wet)	28.956
Stack Pressure	29.008
Feet per Second	8.382
Actual CFM	77417.33
DSCFM	57211.3

Field Calculations

Raw Data Table

Instrument	ppm or %	Zero	Span	Cylinder Value	Gas Corrected for Calibration
O_2 (dry)	14.77	0.15	11.10	11.1	**14.82**
CO_2 (wet)	5.87	0.06	8.54	8.4	**5.73**
NOx (wet)	20.10	0.05	48.37	49	**20.34**
SO_2 (wet)	41.07	0.04	49.27	49.4	**41.18**
CO (wet)	29.096	0.04	50.28	50.40	**29.15**

Moisture	5.23	**Standard CFH**	**3,621,926**
Fuel Factor	1877	K Standard CFM	60.365
DSCFM	57211		

Results

Gases Start	**1:25 AM**	**Flow Start**	**1:25 AM**
Gases Stop	**1:45 AM**	**Flow Stop**	**1:31 AM**

CO_2 %, wet	**5.7**
NOX ppm, wet	**20.3**
NOx LB/mmBTU	**0.080**
SO_2 ppm, wet	**41.2**
SO_2 LB/mmBTU	**0.224**
CO ppm, wet	**29.2**
CO LB/mmBTU	**0.069**
Standard CFH	**3,622,000**

MSI / Manitowoc PU
Manitowoc, WI
S20 Boiler Stack
7/29/2014
Run 3

Time	SO_2 ppm, w	Nox ppm, w	$\%O_2$, d	$\% CO_2$, w	CO ppm, w
1:25	42.846284	18.512576	14.22255	6.451702	29.38248
1:26	41.398336	19.081372	14.63654	5.667671	29.44348
1:27	41.66538	21.638838	14.52129	5.531679	29.02872
1:28	42.210044	20.139092	14.62963	5.953115	29.61868
1:29	39.7295	20.64198	14.91173	5.808525	28.78592
1:30	40.965256	20.353438	14.75181	5.850502	29.74384
1:31	41.923528	18.984572	15.06	5.881601	28.01288
1:32	38.897508	18.26233	14.76803	6.432919	28.076
1:33	41.934512	21.066896	14.57609	6.082521	28.5356
1:34	39.469936	21.399402	14.44478	5.708595	28.90492
1:35	39.188512	19.718732	14.77548	6.019287	29.55972
1:36	38.318788	19.566338	14.6792	5.524483	28.78556
1:37	40.630264	20.582686	14.96748	5.927597	29.43196
1:38	38.301128	17.862648	15.01928	5.787383	29.85948
1:39	40.924532	22.582008	15.169	5.633842	28.78444
1:40	40.33364	20.817352	14.72959	5.183388	29.14388
1:41	42.774968	19.560754	14.90623	5.778061	28.58996
1:42	40.959412	20.52237	14.59035	5.623922	29.08904
1:43	42.512684	19.656292	15.15333	6.002628	28.90692
1:44	41.646324	20.410264	14.94245	6.194386	29.14772
1:45	45.843484	20.821732	14.75486	6.18224	30.17788
Average	**41.070**	**20.104**	**14.772**	**5.868**	**29.096**

MSI / Manitowoc PU
Manitowoc, WI
S20 Boiler Stack

7/29/2014
Test 1L Run 4
Low "Normal" Load (80 Klbs/Hr)

Volumetric Flow Rate Data

Number of Sample Points 16

Point Number		Delta p	Sq. root delta p	Temperature	Time
1	A-1	0.014	0.118	197	1:55 AM
2	A-2	0.014	0.118	197	
3	A-3	0.015	0.122	197	
4	A-4	0.016	0.126	197	
5	B-1	0.019	0.138	197	
6	B-2	0.020	0.141	197	
7	B-3	0.022	0.148	197	
8	B-4	0.023	0.152	197	
9	C-1	0.018	0.134	197	
10	C-2	0.022	0.148	197	
11	C-3	0.023	0.152	197	
12	C-4	0.022	0.148	197	
13	D-1	0.015	0.122	197	
14	D-2	0.017	0.130	197	
15	D-3	0.018	0.134	197	
16	D-4	0.014	0.118	197	2:01 AM
Average		0.0183	0.135	197	

Moisture Content Data	
Dry Bulb (°F)	197
Wet Bulb (°F)	108.0
TRA	1.18
Vapor Pressure of Wate	2.45
ZT	89.00
PM	151.04
Barometric Pressure	29.04
Moisture Content	5.21
O_2 %	14.87
CO_2 %	6.03
Standard CFH	3,535,166
K Standard CFH	58.919

Flow Rate Data	
Static Pressure	-0.44
Pitot Coefficient	0.813
Duct Width (in.)	0
Duct Length (in.)	0
Duct Area (ft^2)	0
Stack Diameter (in.)	168
Stack Area (ft^2)	153.93804
Molecular Weight (dry)	29.56
Molecular Weight (wet)	28.958
Stack Pressure	29.008
Feet per Second	8.187
Actual CFM	75620.42
DSCFM	55851.58

Field Calculations

Raw Data Table

Instrument	ppm or %	Zero	Span	Cylinder Value	Gas Corrected for Calibration
O_2 (dry)	14.78	0.17	11.08	11.1	**14.87**
CO_2 (wet)	5.85	0.06	8.53	8.4	**5.72**
NOx (wet)	19.66	0.05	48.33	49	**19.91**
SO_2 (wet)	52.20	0.04	49.30	49.4	**52.31**
CO (wet)	29.891	0.03	50.42	50.40	**29.87**

Moisture	5.21	**Standard CFH**	**3,535,166**
Fuel Factor	1877	K Standard CFM	58.919
DSCFM	55852		

Results

Gases Start	**1:55 AM**	**Flow Start**	**1:55 AM**
Gases Stop	**2:15 AM**	**Flow Stop**	**2:01 AM**
CO_2 %, wet	**5.7**		
NOX ppm, wet	**19.9**		
NOx LB/mmBTU	**0.078**		
SO_2 ppm, wet	**52.3**		
SO_2 LB/mmBTU	**0.285**		
CO ppm, wet	**29.9**		
CO LB/mmBTU	**0.071**		
Standard CFH	**3,535,000**		

MSI / Manitowoc PU
Manitowoc, WI
S20 Boiler Stack
7/29/2014
Run 4

Time	SO_2 ppm, w	Nox ppm, w	$\%O_2$, d	% CO_2, w	CO ppm, w
1:55	52.815952	20.648156	15.11303	4.865476	28.900956
1:56	51.596704	18.877582	14.54763	4.877945	28.135254
1:57	53.616204	19.455448	15.12653	6.20612	28.514136
1:58	53.933448	19.604942	14.84954	6.155739	27.386478
1:59	51.567664	18.004168	14.74707	4.872637	28.076664
2:00	53.926916	19.815238	14.86219	6.246683	28.330806
2:01	54.224956	19.75714	14.54159	6.200542	29.839026
2:02	54.81814	19.152278	15.02479	6.238467	29.475894
2:03	58.991236	19.726866	14.57377	6.236581	30.353022
2:04	53.057456	19.2434	14.5896	6.234515	29.833104
2:05	52.756316	19.153812	14.7728	4.88715	30.597588
2:06	51.866104	18.576068	14.58103	6.262241	30.224502
2:07	49.460764	19.396522	14.64658	6.284465	29.53776
2:08	47.719688	18.911616	14.74429	6.297817	30.34794
2:09	47.373404	19.245948	14.73281	4.868709	30.161334
2:10	51.264632	20.151502	14.77051	6.216304	30.422364
2:11	51.615572	19.940298	14.798	4.887082	30.849714
2:12	51.026768	20.294372	14.55067	6.319724	31.42272
2:13	53.974756	21.346694	14.81287	6.210615	31.935834
2:14	49.530908	20.24603	14.88255	6.231452	32.074434
2:15	51.037684	21.40686	15.07616	6.247561	31.300626
Average	**52.199**	**19.665**	**14.778**	**5.850**	**29.891**

MSI / Manitowoc PU
Manitowoc, WI
S20 Boiler Stack

7/29/2014
Test 1L Run 5
Low "Normal" Load (80 Klbs/Hr)

Volumetric Flow Rate Data

Number of Sample Points 16

Point Number		Delta p	Sq. root delta p	Temperature	Time
1	A-1	0.012	0.110	197	2:25 AM
2	A-2	0.013	0.114	197	
3	A-3	0.015	0.122	197	
4	A-4	0.015	0.122	197	
5	B-1	0.019	0.138	197	
6	B-2	0.020	0.141	197	
7	B-3	0.022	0.148	197	
8	B-4	0.023	0.152	197	
9	C-1	0.019	0.138	198	
10	C-2	0.021	0.145	198	
11	C-3	0.020	0.141	198	
12	C-4	0.022	0.148	198	
13	D-1	0.014	0.118	198	
14	D-2	0.015	0.122	198	
15	D-3	0.017	0.130	198	
16	D-4	0.014	0.118	198	2:31 AM
Average		0.0176	0.132	198	

Moisture Content Data		Flow Rate Data	
Dry Bulb (°F)	198		
Wet Bulb (°F)	108.0	Static Pressure	-0.39
TRA	1.18	Pitot Coefficient	0.813
Vapor Pressure of Water	2.45		
ZT	89.50	Duct Width (in.)	0
PM	150.50	Duct Length (in.)	0
Barometric Pressure	29.04	Duct Area (ft^2)	0
		Stack Diameter (in.)	168
		Stack Area (ft^2)	153.93804
Moisture Content	5.19		
		Molecular Weight (dry)	29.584
O_2 %	14.83	Molecular Weight (wet)	28.983
CO_2 %	6.19	Stack Pressure	29.011
		Feet per Second	8.023
Standard CFH	3,462,104	Actual CFM	74104.52
K Standard CFH	57.702	DSCFM	54708.4

Field Calculations

Raw Data Table

Instrument	ppm or %	Zero	Span	Cylinder Value	Gas Corrected for Calibration
O_2 (dry)	14.71	0.17	11.05	11.1	**14.83**
CO_2 (wet)	5.96	0.04	8.48	8.4	**5.87**
NOx (wet)	18.51	0.04	48.27	49	**18.76**
SO_2 (wet)	53.45	0.05	49.33	49.4	**53.54**
CO (wet)	29.350	0.02	50.55	50.40	**29.26**

Moisture	5.19	**Standard CFH**	**3,462,104**
Fuel Factor	1877	K Standard CFM	57.702
DSCFM	54708		

Results

Gases Start	**2:25 AM**	**Flow Start**	**2:25 AM**
Gases Stop	**2:45 AM**	**Flow Stop**	**2:31 AM**

CO_2 %, wet	**5.9**
NOX ppm, wet	**18.8**
NOx LB/mmBTU	**0.072**
SO_2 ppm, wet	**53.5**
SO_2 LB/mmBTU	**0.284**
CO ppm, wet	**29.3**
CO LB/mmBTU	**0.068**
Standard CFH	**3,462,000**

MSI / Manitowoc PU
Manitowoc, WI
S20 Boiler Stack
7/29/2014
Run 5

Time	SO_2 ppm, w	Nox ppm, w	$\%O_2$, d	% CO_2, w	CO ppm, w
2:25	50.095512	18.755964	14.89862	6.3346	29.18836
2:26	54.239268	18.121114	14.54039	4.914778	30.04332
2:27	54.250184	17.972294	14.71524	4.91045	29.688
2:28	52.461808	16.447802	14.71458	6.312519	29.073
2:29	55.696516	20.434036	15.00697	6.227547	29.1832
2:30	53.645544	17.39828	14.59368	6.315243	28.52268
2:31	53.34508	17.700054	14.63503	6.342751	30.04516
2:32	58.422952	18.789834	14.47424	6.246254	29.79152
2:33	54.842832	17.460786	14.56136	6.26469	30.64648
2:34	55.419432	19.033392	14.61263	6.202853	28.57964
2:35	56.009588	17.881246	15.22019	6.358987	28.76324
2:36	54.245736	17.580926	14.80699	6.250193	28.89448
2:37	55.144236	19.688372	14.65987	6.224927	28.46564
2:38	51.303744	18.970312	14.54122	6.286552	29.19212
2:39	49.840836	18.817356	14.48418	6.286266	29.31028
2:40	51.911276	19.959958	14.94089	6.26197	29.31212
2:41	52.49894	18.702556	14.4678	6.368486	29.879
2:42	51.946116	17.733726	14.72705	4.911569	30.11356
2:43	52.21936	19.187976	14.62285	6.357262	29.08264
2:44	54.0045	18.1276	14.95005	4.908421	29.62368
2:45	50.9979	19.900952	14.68426	4.915835	28.94844
Average	**53.454**	**18.508**	**14.708**	**5.962**	**29.350**

MSI / Manitowoc PU
Manitowoc, WI
S20 Boiler Stack

7/29/2014
Test 1L Run 6
Low "Normal" Load (80 Klbs/Hr)

Volumetric Flow Rate Data

Number of Sample Points 16

Point Number		Delta p	Sq. root delta p	Temperature	Time
1	A-1	0.012	0.110	198	2:55 AM
2	A-2	0.013	0.114	198	
3	A-3	0.015	0.122	198	
4	A-4	0.014	0.118	198	
5	B-1	0.020	0.141	198	
6	B-2	0.020	0.141	198	
7	B-3	0.021	0.145	198	
8	B-4	0.020	0.141	198	
9	C-1	0.019	0.138	199	
10	C-2	0.020	0.141	199	
11	C-3	0.019	0.138	199	
12	C-4	0.021	0.145	199	
13	D-1	0.013	0.114	199	
14	D-2	0.014	0.118	199	
15	D-3	0.017	0.130	199	
16	D-4	0.014	0.118	199	3:01 AM
Average		0.0170	0.130	199	

Moisture Content Data		Flow Rate Data	
Dry Bulb (°F)	199		
Wet Bulb (°F)	108.0	Static Pressure	-0.41
TRA	1.18	Pitot Coefficient	0.813
Vapor Pressure of Water	2.45		
ZT	90.50	Duct Width (in.)	0.00
PM	149.45	Duct Length (in.)	0.00
Barometric Pressure	29.04	Duct Area (ft^2)	0.00
		Stack Diameter (in.)	168.00
		Stack Area (ft^2)	153.94
Moisture Content	5.15		
		Molecular Weight (dry)	29.599
O_2 %	14.885	Molecular Weight (wet)	29.002
CO_2 %	6.275	Stack Pressure	29.01
		Feet per Second	7.901
Standard CFH	3,403,895	Actual CFM	72973.1
K Standard CFH	56.732	DSCFM	53809.

Field Calculations

Raw Data Table

Instrument	ppm or %	Zero	Span	Cylinder Value	Gas Corrected for Calibration
O_2 (dry)	14.76	0.16	11.05	11.1	**14.88**
CO_2 (wet)	6.04	0.03	8.47	8.4	**5.95**
NOx (wet)	18.52	0.03	48.29	49	**18.77**
SO_2 (wet)	48.90	0.03	49.30	49.4	**49.00**
CO (wet)	29.640	0.02	50.55	50.40	**29.55**
Moisture	5.15		**Standard CFH**		**3,403,895**
Fuel Factor	1877		K Standard CFM		56.732
DSCFM	53809				

Results

Gases Start	**2:55 AM**	**Flow Start**	**2:55 AM**
Gases Stop	**3:15 AM**	**Flow Stop**	**3:01 AM**
CO_2 %, wet	**6.0**		
NOX ppm, wet	**18.8**		
NOx LB/mmBTU	**0.071**		
SO_2 ppm, wet	**49.0**		
SO_2 LB/mmBTU	**0.257**		
CO ppm, wet	**29.5**		
CO LB/mmBTU	**0.068**		
Standard CFH	**3,404,000**		

MSI / Manitowoc PU
Manitowoc, WI
S20 Boiler Stack
7/29/2014
Run 6

Time	SO_2 ppm, w	Nox ppm, w	$\%O_2$, d	% CO_2, w	CO ppm, w
2:55	44.203424	17.188992	15.07129	5.978865	29.816055
2:56	46.19914	18.948338	14.906	5.975885	30.624165
2:57	49.516188	19.133516	14.76642	6.273671	29.886615
2:58	49.756012	18.678288	14.90157	6.350791	29.61243
2:59	52.12396	19.693806	14.43076	6.412776	30.28149
3:00	51.258812	18.341218	14.74035	4.967359	29.476215
3:01	47.672968	18.313366	14.27093	6.415292	30.6225
3:02	48.062916	18.894266	14.78639	6.296799	30.366135
3:03	48.673284	18.68101	14.70048	6.315545	29.90457
3:04	47.738668	18.407554	14.8349	6.350026	30.29733
3:05	51.075528	19.350644	14.7692	6.415223	30.58416
3:06	46.004196	16.611742	14.98852	6.366669	28.944945
3:07	49.793072	18.860802	14.62385	5.984597	29.149245
3:08	47.9863	18.39972	14.54965	4.977837	28.52892
3:09	47.390088	17.404334	14.95826	6.431078	29.20806
3:10	53.312616	20.411282	14.72182	4.972746	29.20248
3:11	52.154484	19.183278	14.8561	6.407321	29.6712
3:12	54.485908	19.127626	14.70737	6.332257	29.67291
3:13	48.918512	17.343384	14.77302	6.257195	29.27385
3:14	47.68646	18.764846	14.88423	6.267245	28.59525
3:15	42.827184	17.127118	14.64234	4.989695	28.729755
Average	**48.897**	**18.517**	**14.756**	**6.035**	**29.640**

MSI / Manitowoc PU
Manitowoc, WI
S20 Boiler Stack

7/29/2014
Test 1L Run 7
Low "Normal" Load (80 Klbs/Hr)

Volumetric Flow Rate Data

Number of Sample Points 16

Point Number		Delta p	Sq. root delta p	Temperature	Time
1	A-1	0.014	0.118	199	3:25 AM
2	A-2	0.015	0.122	199	
3	A-3	0.015	0.122	199	
4	A-4	0.014	0.118	199	
5	B-1	0.019	0.138	199	
6	B-2	0.022	0.148	199	
7	B-3	0.022	0.148	199	
8	B-4	0.020	0.141	199	
9	C-1	0.019	0.138	200	
10	C-2	0.021	0.145	200	
11	C-3	0.023	0.152	200	
12	C-4	0.021	0.145	200	
13	D-1	0.015	0.122	200	
14	D-2	0.015	0.122	200	
15	D-3	0.017	0.130	200	
16	D-4	0.014	0.118	200	3:31 AM
Average		0.0179	0.133	200	

Moisture Content Data		Flow Rate Data	
Dry Bulb (°F)	200		
Wet Bulb (°F)	109.0	Static Pressure	-0.40
TRA	1.18	Pitot Coefficient	0.813
Vapor Pressure of Water	2.52		
ZT	90.50	Duct Width (in.)	0.00
PM	156.68	Duct Length (in.)	0.00
Barometric Pressure	29.04	Duct Area (ft^2)	0.00
		Stack Diameter (in.)	168.00
		Stack Area (ft^2)	153.94
Moisture Content	5.40		
		Molecular Weight (dry)	29.573
O_2 %	14.962	Molecular Weight (wet)	28.948
CO_2 %	6.09	Stack Pressure	29.011
		Feet per Second	8.119
Standard CFH	3,492,872	Actual CFM	74992.42
K Standard CFH	58.215	DSCFM	55070.57

Field Calculations

Raw Data Table

Instrument	ppm or %	Zero	Span	Cylinder Value	Gas Corrected for Calibration
O_2 (dry)	14.82	0.16	11.04	11.1	**14.96**
CO_2 (wet)	5.84	0.04	8.46	8.4	**5.76**
NOx (wet)	20.20	0.03	48.29	49	**20.48**
SO_2 (wet)	33.91	0.02	49.29	49.4	**33.98**
CO (wet)	27.325	0.03	50.55	50.40	**27.24**

Moisture	5.40	**Standard CFH**	**3,492,872**
Fuel Factor	1877	K Standard CFM	58.215
DSCFM	55071		

Results

Gases Start	**3:25 AM**	**Flow Start**	**3:25 AM**
Gases Stop	**3:45 AM**	**Flow Stop**	**3:31 AM**

CO_2 %, wet	**5.8**
NOX ppm, wet	**20.5**
NOx LB/mmBTU	**0.080**
SO_2 ppm, wet	**34.0**
SO_2 LB/mmBTU	**0.184**
CO ppm, wet	**27.2**
CO LB/mmBTU	**0.064**
Standard CFH	**3,493,000**

MSI / Manitowoc PU
Manitowoc, WI
S20 Boiler Stack
7/29/2014
Run 7

Time	SO_2 ppm, w	Nox ppm, w	$\%O_2$, d	% CO_2, w	CO ppm, w
3:25	26.590726	18.352678	15.02041	5.581963	29.19835
3:26	29.55881	21.803724	14.89797	5.588222	28.3194
3:27	28.982418	19.80508	14.45893	6.816404	29.79035
3:28	30.693916	21.653484	14.71248	5.567206	31.08705
3:29	28.645596	19.170554	14.89141	5.570608	28.7762
3:30	28.943892	20.27382	14.73578	5.573848	28.92855
3:31	28.6288	19.441516	14.75857	5.59327	26.99995
3:32	31.531076	19.138358	14.76447	5.593548	27.8256
3:33	30.925476	17.744816	14.66467	5.570434	26.4749
3:34	33.034386	22.95071	14.67585	5.560339	27.8998
3:35	32.694972	19.89102	14.91765	5.576822	29.77205
3:36	37.2229	20.64035	14.64131	6.978999	28.09475
3:37	35.141572	20.579056	15.32217	5.567371	26.32205
3:38	34.826374	17.89534	14.98626	7.011011	25.29045
3:39	36.594932	20.608314	14.86596	5.580117	24.7458
3:40	37.772764	22.005596	14.82849	5.578734	24.52145
3:41	39.835928	21.5046	14.82701	5.575033	25.7118
3:42	38.0648	19.620746	14.74644	7.00243	24.511
3:43	41.12202	21.834862	14.95059	5.578119	26.61385
3:44	41.126396	19.953836	14.58958	5.568657	25.5789
3:45	40.121364	19.259138	14.98348	5.57662	27.3656
Average	**33.908**	**20.197**	**14.821**	**5.839**	**27.325**

MSI / Manitowoc PU
Manitowoc, WI
S20 Boiler Stack

7/29/2014
Test 1L Run 8
Low "Normal" Load (80 Klbs/Hr)

Volumetric Flow Rate Data

Number of Sample Points 16

Point Number		Delta p	Sq. root delta p	Temperature	Time
1	A-1	0.013	0.114	199	3:55 AM
2	A-2	0.014	0.118	199	
3	A-3	0.015	0.122	199	
4	A-4	0.014	0.118	199	
5	B-1	0.020	0.141	199	
6	B-2	0.022	0.148	199	
7	B-3	0.020	0.141	199	
8	B-4	0.019	0.138	199	
9	C-1	0.020	0.141	199	
10	C-2	0.021	0.145	199	
11	C-3	0.023	0.152	199	
12	C-4	0.022	0.148	199	
13	D-1	0.014	0.118	199	
14	D-2	0.015	0.122	199	
15	D-3	0.017	0.130	199	
16	D-4	0.013	0.114	199	4:01 AM
Average		0.018	0.132	199	

Moisture Content Data		Flow Rate Data	
Dry Bulb (°F)	199		
Wet Bulb (°F)	108.0	Static Pressure	-0.40
TRA	1.18	Pitot Coefficient	0.813
Vapor Pressure of Water	2.45		
ZT	91.00	Duct Width (in.)	0.00
PM	148.92	Duct Length (in.)	0.00
Barometric Pressure	29.04	Duct Area (ft^2)	0.00
		Stack Diameter (in.)	168.00
		Stack Area (ft^2)	153.94
Moisture Content	5.13		
		Molecular Weight (dry)	29.588
O_2 %	14.968	Molecular Weight (wet)	28.993
CO_2 %	6.183	Stack Pressure	29.011
		Feet per Second	8.046
Standard CFH	3,463,888	Actual CFM	74313.74
K Standard CFH	57.731	DSCFM	54768.

Field Calculations

Raw Data Table

Instrument	ppm or %	Zero	Span	Cylinder Value	Gas Corrected for Calibration
O_2 (dry)	14.82	0.15	11.03	11.1	**14.97**
CO_2 (wet)	5.93	0.05	8.43	8.4	**5.87**
NOx (wet)	17.97	0.03	48.31	49	**18.21**
SO_2 (wet)	51.39	0.02	49.29	49.4	**51.51**
CO (wet)	27.797	0.04	50.50	50.40	**27.73**

Moisture	5.13	**Standard CFH**	**3,463,888**
Fuel Factor	1877	K Standard CFM	57.731
DSCFM	54768		

Results

Gases Start	**3:55 AM**	**Flow Start**	**3:55 AM**
Gases Stop	**4:15 AM**	**Flow Stop**	**4:01 AM**
CO_2 %, wet	**5.9**		
NOX ppm, wet	**18.2**		
NOx LB/mmBTU	**0.070**		
SO_2 ppm, wet	**51.5**		
SO_2 LB/mmBTU	**0.274**		
CO ppm, wet	**27.7**		
CO LB/mmBTU	**0.064**		
Standard CFH	**3,464,000**		

MSI / Manitowoc PU
Manitowoc, WI
S20 Boiler Stack
7/29/2014
Run 8

Time	SO_2 ppm, w	Nox ppm, w	$\%O_2$, d	$\% CO_2$, w	CO ppm, w
3:55	51.57684	18.363538	14.67322	5.789288	28.32165
3:56	47.987688	19.590172	15.03217	6.556894	29.7954
3:57	49.177488	19.860548	14.69836	8.274024	29.9362
3:58	46.246544	16.42192	14.84364	6.076514	28.83295
3:59	49.598836	17.910714	15.16459	5.510746	27.5783
4:00	52.193596	19.18418	14.77842	5.801707	26.52215
4:01	49.865676	18.608834	14.98171	6.15778	25.47645
4:02	49.242036	16.72325	14.92506	5.477282	26.2463
4:03	49.261712	16.787362	14.49644	6.330443	25.94515
4:04	50.147612	18.488944	14.44019	4.965418	27.7307
4:05	51.342872	17.91415	14.84512	5.89261	26.9778
4:06	49.242036	17.972432	14.53926	5.752567	28.1754
4:07	52.505716	18.669182	15.06337	5.269079	27.27685
4:08	53.38178	16.787538	14.63244	5.431574	28.25
4:09	51.077104	16.366418	14.85021	5.724434	27.367
4:10	53.403548	18.55142	14.78858	4.820038	27.6531
4:11	51.634576	18.830536	15.18893	6.272914	27.51435
4:12	55.780524	18.493376	14.86237	6.581653	29.3618
4:13	56.989196	18.672744	14.55529	6.257563	29.74505
4:14	54.858976	16.697286	14.89341	5.774175	28.7071
4:15	53.69296	16.485216	15.02224	5.812518	26.32735
Average	**51.391**	**17.970**	**14.823**	**5.930**	**27.797**

MSI / Manitowoc PU
Manitowoc, WI
S20 Boiler Stack

7/29/2014
Test 1L Run 9
Low "Normal" Load (80 Klbs/Hr)

Volumetric Flow Rate Data

Number of Sample Points 16

Point Number		Delta p	Sq. root delta p	Temperature	Time
1	A-1	0.015	0.122	198	4:25 AM
2	A-2	0.014	0.118	198	
3	A-3	0.015	0.122	198	
4	A-4	0.014	0.118	198	
5	B-1	0.021	0.145	198	
6	B-2	0.022	0.148	198	
7	B-3	0.020	0.141	198	
8	B-4	0.020	0.141	198	
9	C-1	0.022	0.148	199	
10	C-2	0.021	0.145	199	
11	C-3	0.024	0.155	199	
12	C-4	0.021	0.145	199	
13	D-1	0.014	0.118	199	
14	D-2	0.015	0.122	199	
15	D-3	0.016	0.126	199	
16	D-4	0.013	0.114	199	4:31 AM
Average		0.018	0.133	199	

Moisture Content Data		Flow Rate Data	
Dry Bulb (°F)	199		
Wet Bulb (°F)	108.0	Static Pressure	-0.42
TRA	1.18	Pitot Coefficient	0.813
Vapor Pressure of Water	2.45		
ZT	90.50	Duct Width (in.)	0.00
PM	149.45	Duct Length (in.)	0.00
Barometric Pressure	29.04	Duct Area (ft^2)	0.00
		Stack Diameter (in.)	168.00
		Stack Area (ft^2)	153.94
Moisture Content	5.15		
		Molecular Weight (dry)	29.592
O_2 %	14.974	Molecular Weight (wet)	28.995
CO_2 %	6.209	Stack Pressure	29.009
		Feet per Second	8.113
Standard CFH	3,495,148	Actual CFM	74931.3
K Standard CFH	58.252	DSCFM	55251.41

Field Calculations

Raw Data Table

Instrument	ppm or %	Zero	Span	Cylinder Value	Gas Corrected for Calibration
O_2 (dry)	14.84	0.14	11.04	11.1	**14.97**
CO_2 (wet)	5.97	0.05	8.45	8.4	**5.89**
NOx (wet)	18.43	0.03	48.34	49	**18.66**
SO_2 (wet)	50.61	0.02	49.28	49.4	**50.73**
CO (wet)	26.810	0.05	50.46	50.40	**26.76**

Moisture	5.15	**Standard CFH**	**3,495,148**
Fuel Factor	1877	K Standard CFM	58.252
DSCFM	55251.		

Results

Gases Start	**4:25 AM**	**Flow Start**	**4:25 AM**
Gases Stop	**4:45 AM**	**Flow Stop**	**4:31 AM**
CO_2 %, wet	**5.9**		
NOX ppm, wet	**18.7**		
NOx LB/mmBTU	**0.071**		
SO_2 ppm, wet	**50.7**		
SO_2 LB/mmBTU	**0.269**		
CO ppm, wet	**26.8**		
CO LB/mmBTU	**0.062**		
Standard CFH	**3,495,000**		

MSI / Manitowoc PU
Manitowoc, WI
S20 Boiler Stack
7/29/2014
Run 9

Time	SO_2 ppm, w	Nox ppm, w	$\%O_2$, d	% CO_2, w	CO ppm, w
4:25	46.424576	17.620348	15.01669	5.8126	25.490992
4:26	51.394764	19.19893	14.74319	5.841092	25.272768
4:27	52.0812	19.55668	14.48419	5.843946	26.038622
4:28	51.277104	19.652352	14.78481	5.836821	26.671398
4:29	50.952248	19.014988	14.86861	5.855266	26.326076
4:30	53.006728	20.6303	14.7404	5.852889	26.735292
4:31	50.371668	18.64989	15.0668	5.827157	26.177082
4:32	50.085352	19.732274	14.8916	7.171682	26.878168
4:33	50.976304	18.406842	15.01375	5.838272	27.063364
4:34	54.562152	18.991318	14.96289	5.848429	28.21341
4:35	50.094048	17.1374	14.91194	5.837034	26.818874
4:36	48.907208	18.289724	15.29034	5.849101	26.67816
4:37	49.459488	18.046734	14.70004	5.832659	26.388084
4:38	51.549476	18.04588	14.6619	5.816087	27.748304
4:39	52.127092	20.185354	14.67029	5.800455	28.070258
4:40	49.157136	16.25651	14.56453	5.830293	27.611592
4:41	50.41102	17.195658	14.69494	5.830612	26.382242
4:42	49.781316	17.621216	14.74352	5.840069	27.055314
4:43	48.562672	18.31589	14.67834	5.839045	26.73934
4:44	50.941332	18.830584	15.05554	5.83714	28.202738
4:45	50.635952	15.587272	15.03351	7.270487	26.454094
Average	**50.608**	**18.427**	**14.837**	**5.967**	**26.810**

MSI / Manitowoc PU
Manitowoc, WI
S20 Boiler Stack

7/29/2014
Test 1L Run 10
Low "Normal" Load (80 Klbs/Hr)

Volumetric Flow Rate Data

Number of Sample Points 16

Point Number		Delta p	Sq. root delta p	Temperature	Time
1	A-1	0.014	0.118	199	4:55 AM
2	A-2	0.014	0.118	199	
3	A-3	0.015	0.122	199	
4	A-4	0.016	0.126	199	
5	B-1	0.022	0.148	199	
6	B-2	0.020	0.141	199	
7	B-3	0.020	0.141	199	
8	B-4	0.020	0.141	199	
9	C-1	0.022	0.148	199	
10	C-2	0.022	0.148	199	
11	C-3	0.023	0.152	199	
12	C-4	0.021	0.145	199	
13	D-1	0.015	0.122	199	
14	D-2	0.015	0.122	199	
15	D-3	0.016	0.126	199	
16	D-4	0.013	0.114	199	5:01 AM
Average		0.018	0.134	199	

Moisture Content Data		Flow Rate Data	
Dry Bulb (°F)	199		
Wet Bulb (°F)	108.0	Static Pressure	-0.41
TRA	1.18	Pitot Coefficient	0.813
Vapor Pressure of Water	2.45		
ZT	91.00	Duct Width (in.)	0.00
PM	148.92	Duct Length (in.)	0.00
Barometric Pressure	29.04	Duct Area (ft^2)	0.00
		Stack Diameter (in.)	168.00
		Stack Area (ft^2)	153.94
Moisture Content	5.13		
		Molecular Weight (dry)	29.578
O_2 %	14.89	Molecular Weight (wet)	28.983
CO_2 %	6.138	Stack Pressure	29.01
		Feet per Second	8.136
Standard CFH	3,502,482	Actual CFM	75143.64
K Standard CFH	58.375	DSCFM	55378.1

Field Calculations

Raw Data Table

Instrument	ppm or %	Zero	Span	Cylinder Value	Gas Corrected for Calibration
O_2 (dry)	14.77	0.14	11.05	11.1	**14.89**
CO_2 (wet)	5.91	0.04	8.47	8.4	**5.82**
NOx (wet)	18.52	0.04	48.37	49	**18.74**
SO_2 (wet)	48.47	0.02	49.30	49.4	**48.57**
CO (wet)	28.000	0.05	50.43	50.40	**27.96**
Moisture	5.13		**Standard CFH**		3,502,482
Fuel Factor	1877		K Standard CFM		58.375
DSCFM	55378				

Results

Gases Start	**4:55 AM**	**Flow Start**	**4:55 AM**
Gases Stop	**5:15 AM**	**Flow Stop**	**5:01 AM**
CO_2 %, wet	**5.8**		
NOX ppm, wet	**18.7**		
NOx LB/mmBTU	**0.072**		
SO_2 ppm, wet	**48.6**		
SO_2 LB/mmBTU	**0.260**		
CO ppm, wet	**28.0**		
CO LB/mmBTU	**0.065**		
Standard CFH	**3,502,000**		

MSI / Manitowoc PU
Manitowoc, WI
S20 Boiler Stack
7/29/2014
Run 10

Time	SO_2 ppm, w	Nox ppm, w	$\%O_2$, d	$\% CO_2$, w	CO ppm, w
4:55	49.82578	16.664454	14.73581	5.919045	26.088144
4:56	51.902288	17.767052	14.38642	5.915475	27.827712
4:57	49.82578	15.186966	15.18583	5.899964	26.67192
4:58	47.752972	18.245446	14.99512	5.915572	26.462832
4:59	46.843964	19.658974	14.97958	5.910989	28.591584
5:00	46.826376	18.97205	14.45502	5.908077	27.52416
5:01	45.040292	18.700832	14.61449	5.902434	27.094416
5:02	45.90038	18.244424	15.04543	5.906644	27.526944
5:03	49.24412	19.365248	14.77532	5.91123	28.737888
5:04	50.7597	20.112554	14.45935	5.902289	28.817712
5:05	49.871576	20.28866	14.68876	5.900889	28.108608
5:06	47.207408	17.549922	14.86309	5.901327	28.594848
5:07	46.201096	18.821434	14.51485	5.901084	29.24112
5:08	45.913364	17.703356	15.1564	5.895447	27.53256
5:09	50.153308	19.42754	14.85734	5.898924	28.224624
5:10	44.724976	15.608074	14.87541	5.921952	27.312336
5:11	50.718256	19.487614	14.5758	5.909956	28.944048
5:12	50.740024	20.52959	14.81172	5.912245	28.585008
5:13	49.838828	18.73065	14.64583	5.915321	29.431728
5:14	50.485336	18.248902	14.79191	5.932269	28.23288
5:15	48.058296	19.552482	14.73324	5.897459	28.442928
Average	**48.468**	**18.517**	**14.769**	**5.909**	**28.000**

HIGH LOAD

MPU00198

MSI / Manitowoc PU
Manitowoc, WI
S20 Boiler Stack

7/29/2014
Test 1H Run 1
High Load (190 Klbs/Hr)

Volumetric Flow Rate Data

Number of Sample Points 16

Point Number		Delta p	Sq. root delta p	Temperature	Time
1	A-1	0.038	0.195	240	6:30 AM
2	A-2	0.042	0.205	240	
3	A-3	0.039	0.197	240	
4	A-4	0.044	0.210	240	
5	B-1	0.040	0.200	240	
6	B-2	0.048	0.219	240	
7	B-3	0.046	0.214	240	
8	B-4	0.031	0.176	240	
9	C-1	0.030	0.173	240	
10	C-2	0.043	0.207	240	
11	C-3	0.041	0.202	240	
12	C-4	0.034	0.184	240	
13	D-1	0.033	0.182	240	
14	D-2	0.035	0.187	240	
15	D-3	0.037	0.192	240	
16	D-4	0.032	0.179	240	6:36 AM
Average		0.038	0.195	240	

Moisture Content Data	
Dry Bulb (°F)	240
Wet Bulb (°F)	115.0
TRA	1.17
Vapor Pressure of Water	3.00
ZT	125.00
PM	167.37
Barometric Pressure	29.09
Standard Meter Volume	
Moisture Content	5.76
O_2 %	10.154
CO_2 %	9.494
Standard CFH	4,951,189
K Standard CFH	82.52

Flow Rate Data	
Static Pressure	-0.39
Pitot Coefficient	0.813
Duct Width (in.)	0.0
Duct Length (in.)	0.0
Duct Area (ft^2)	0.0
Stack Diameter (in.)	168.0
Stack Area (ft^2)	153.938
Molecular Weight (dry)	29.925
Molecular Weight (wet)	29.238
Stack Pressure	29.061
Feet per Second	12.195
Actual CFM	112633.76
DSCFM	77767.22

Field Calculations

Raw Data Table

Instrument	ppm or %	Zero	Span	Cylinder Value	Gas Corrected for Calibration	
O_2 (dry)	10.12	0.10	11.06	11.10	**10.15**	dry
CO_2 (wet)	9.10	0.04	8.51	8.36	**8.95**	wet

Moisture	5.76	**Standard CFH**	**4,951,189**
Fuel Factor C	1877	K Standard CFM	82.52
DSCFM	77767		

Results

Start Time	**6:30 AM**
Stop Time	**6:36 AM**
Standard CFH	**4,951,000**
CO_2 %, wet	**8.95**
WAF applied	**0.9900**

MSI / Manitowoc PU
Manitowoc, WI
S20 Boiler Stack

7/29/2014
Test 1H Run 2
High Load (190 Klbs/Hr)

Volumetric Flow Rate Data

Number of Sample Points 16

Point Number		Delta p	Sq. root delta p	Temperature	Time
1	A-1	0.043	0.207	240	6:37 AM
2	A-2	0.040	0.200	240	
3	A-3	0.035	0.187	240	
4	A-4	0.037	0.192	240	
5	B-1	0.041	0.202	240	
6	B-2	0.049	0.221	240	
7	B-3	0.042	0.205	240	
8	B-4	0.029	0.170	240	
9	C-1	0.038	0.195	240	
10	C-2	0.042	0.205	240	
11	C-3	0.040	0.200	240	
12	C-4	0.032	0.179	240	
13	D-1	0.042	0.205	239	
14	D-2	0.044	0.210	239	
15	D-3	0.037	0.192	239	
16	D-4	0.036	0.190	239	6:43 AM
Average		0.039	0.198	240	

Moisture Content Data	
Dry Bulb (°F)	240
Wet Bulb (°F)	115.0
TRA	1.17
Vapor Pressure of Water	3.00
ZT	125.00
PM	167.37
Barometric Pressure	29.09
Standard Meter Volume	
Moisture Content	5.76
O_2 %	10.154
CO_2 %	9.494
Standard CFH	5,011,117
K Standard CFH	83.519

Flow Rate Data	
Static Pressure	-0.39
Pitot Coefficient	0.81
Duct Width (in.)	0.00
Duct Length (in.)	0.00
Duct Area (ft^2)	0.00
Stack Diameter (in.)	168.00
Stack Area (ft^2)	153.94
Molecular Weight (dry)	29.925
Molecular Weight (wet)	29.238
Stack Pressure	29.061
Feet per Second	12.338
Actual CFM	113956.33
DSCFM	78708.49

Field Calculations

Raw Data Table

Instrument	ppm or %	Zero	Span	Cylinder Value	Gas Corrected for Calibration	
O_2 (dry)	10.12	0.10	11.06	11.10	**10.15**	dry
CO_2 (wet)	9.10	0.04	8.51	8.36	**8.95**	wet

Moisture	5.76	**Standard CFH**	5,011,117
Fuel Factor C	1877	K Standard CFM	83.519
DSCFM	78708		

Results

Start Time	**6:37 AM**
Stop Time	**6:43 AM**
Standard CFH	**5,011,000**
CO_2 %, wet	**8.95**
WAF applied	**0.9900**

MSI / Manitowoc PU
Manitowoc, WI
S20 Boiler Stack

7/29/2014
Test 1H **Run 3**
High Load (190 Klbs/Hr)

Volumetric Flow Rate Data

Number of Sample Points 16

Point Number		Delta p	Sq. root delta p	Temperature	Time
1	A-1	0.039	0.197	240	6:44 AM
2	A-2	0.037	0.192	240	
3	A-3	0.038	0.195	240	
4	A-4	0.035	0.187	240	
5	B-1	0.048	0.219	240	
6	B-2	0.046	0.214	240	
7	B-3	0.049	0.221	240	
8	B-4	0.034	0.184	240	
9	C-1	0.036	0.190	240	
10	C-2	0.042	0.205	240	
11	C-3	0.043	0.207	240	
12	C-4	0.040	0.200	240	
13	D-1	0.039	0.197	240	
14	D-2	0.046	0.214	240	
15	D-3	0.039	0.197	240	
16	D-4	0.038	0.195	240	6:50 AM
Average		0.041	0.201	240	

Moisture Content Data	
Dry Bulb (°F)	240
Wet Bulb (°F)	116.0
TRA	1.17
Vapor Pressure of Water	3.08
ZT	124.00
PM	177.04
Barometric Pressure	29.09
Standard Meter Volume	
Moisture Content	6.09
O_2 %	10.154
CO_2 %	9.528
Standard CFH	5,102,059
K Standard CFH	85.034

Flow Rate Data	
Static Pressure	-0.42
Pitot Coefficient	0.813
Duct Width (in.)	0.00
Duct Length (in.)	0.00
Duct Area (ft^2)	0.00
Stack Diameter (in.)	168.00
Stack Area (ft^2)	153.94
Molecular Weight (dry)	29.931
Molecular Weight (wet)	29.204
Stack Pressure	29.059
Feet per Second	12.567
Actual CFM	116074.69
DSCFM	79853.75

Field Calculations

Raw Data Table

Instrument	ppm or %	Zero	Span	Cylinder Value	Gas Corrected for Calibration	
O_2 (dry)	10.12	0.10	11.06	11.10	**10.15**	dry
CO_2 (wet)	9.10	0.04	8.51	8.36	**8.95**	wet
Moisture	6.09		**Standard CFH**		**5,102,059**	
Fuel Factor C	1877		K Standard CFM		85.034	
DSCFM	79854					

Results

Start Time	**6:44 AM**
Stop Time	**6:50 AM**
Standard CFH	**5,102,000**
CO_2 %, wet	**8.95**
WAF applied	**0.9900**

MSI / Manitowoc PU
Manitowoc, WI
S20 Boiler Stack
7/29/2014
Run 1-3

Time	$\%O_2$, d	$\%\ CO_2$, w
6:25	10.341508	9.409186
6:26	10.08486	9.254574
6:27	10.1627	9.124102
6:28	10.109526	9.168414
6:29	10.071342	10.070544
6:30	10.228944	9.424916
6:31	10.054996	9.33228
6:32	10.165048	9.422038
6:33	10.031684	9.265718
6:34	9.98714	9.421614
6:35	10.111692	8.860316
6:36	10.18714	9.45862
6:37	10.173562	8.97723
6:38	10.08629	8.855208
6:39	10.135578	8.316929
6:40	10.027376	8.56918
6:41	10.208826	8.518948
6:42	10.258628	9.09237
6:43	10.000832	8.940636
6:44	9.88887	8.80725
6:45	9.986746	8.76373
6:46	10.070436	8.448622
6:47	10.228578	9.241782
6:48	10.26574	9.330416
6:49	10.132902	9.26364
6:50	10.14528683	9.262202389
Average	**10.121**	**9.100**

MSI / Manitowoc PU
Manitowoc, WI
S20 Boiler Stack

7/29/2014
Test 1H Run 4
High Load (190 Klbs/Hr)

Volumetric Flow Rate Data

Number of Sample Points 16

Point Number		Delta p	Sq. root delta p	Temperature	Time
1	A-1	0.039	0.197	241	7:00 AM
2	A-2	0.034	0.184	241	
3	A-3	0.037	0.192	241	
4	A-4	0.039	0.197	241	
5	B-1	0.041	0.202	241	
6	B-2	0.046	0.214	241	
7	B-3	0.048	0.219	241	
8	B-4	0.033	0.182	241	
9	C-1	0.042	0.205	241	
10	C-2	0.043	0.207	241	
11	C-3	0.037	0.192	241	
12	C-4	0.035	0.187	241	
13	D-1	0.038	0.195	241	
14	D-2	0.042	0.205	241	
15	D-3	0.038	0.195	241	
16	D-4	0.035	0.187	241	7:06 AM
Average		0.039	0.198	241	

Moisture Content Data		Flow Rate Data	
Dry Bulb (°F)	241		
Wet Bulb (°F)	116.0	Static Pressure	-0.04
TRA	1.17	Pitot Coefficient	0.813
Vapor Pressure of Water	3.08		
ZT	125.00	Duct Width (in.)	0
PM	175.85	Duct Length (in.)	0
Barometric Pressure	29.09	Duct Area (ft^2)	0
		Stack Diameter (in.)	168
Standard Meter Volume		Stack Area (ft^2)	153.94
Moisture Content	6.05		
		Molecular Weight (dry)	29.905
O_2 %	10.227	Molecular Weight (wet)	29.185
CO_2 %	9.347	Stack Pressure	29.087
		Feet per Second	12.361
Standard CFH	5,016,015	Actual CFM	114171.25
K Standard CFH	83.6	DSCFM	78545.94

Field Calculations

Raw Data Table

Instrument	ppm or %	Zero	Span	Cylinder Value	Gas Corrected for Calibration	
O_2 (dry)	10.22	0.10	11.08	11.10	**10.23**	dry
CO_2 (wet)	8.93	0.04	8.51	8.36	**8.78**	wet
Moisture	6.05		**Standard CFH**		**5,016,015**	
Fuel Factor C	1877		K Standard CFM		83.6	
DSCFM	78546					

Results

Start Time	**7:00 AM**
Stop Time	**7:06 AM**
Standard CFH	**5,016,000**
CO_2 %, wet	**8.78**
WAF applied	**0.9900**

MSI / Manitowoc PU
Manitowoc, WI
S20 Boiler Stack

7/29/2014
Test 1H Run 5
High Load (190 Klbs/Hr)

Volumetric Flow Rate Data

Number of Sample Points 16

Point Number		Delta p	Sq. root delta p	Temperature	Time
1	A-1	0.038	0.195	238	7:07 AM
2	A-2	0.036	0.190	238	
3	A-3	0.034	0.184	238	
4	A-4	0.041	0.202	238	
5	B-1	0.043	0.207	238	
6	B-2	0.046	0.214	238	
7	B-3	0.046	0.214	238	
8	B-4	0.033	0.182	238	
9	C-1	0.043	0.207	238	
10	C-2	0.046	0.214	238	
11	C-3	0.043	0.207	238	
12	C-4	0.035	0.187	238	
13	D-1	0.043	0.207	238	
14	D-2	0.045	0.212	238	
15	D-3	0.042	0.205	238	
16	D-4	0.039	0.197	238	7:13 AM
Average		0.041	0.202	238	

Moisture Content Data		Flow Rate Data	
Dry Bulb (°F)	238		
Wet Bulb (°F)	116.0	Static Pressure	-0.39
TRA	1.17	Pitot Coefficient	0.813
Vapor Pressure of Water	3.08		
ZT	122.00	Duct Width (in.)	0
PM	179.14	Duct Length (in.)	0
Barometric Pressure	29.09	Duct Area (ft^2)	0
		Stack Diameter (in.)	168
Standard Meter Volume		Stack Area (ft^2)	153.94
Moisture Content	6.16		
		Molecular Weight (dry)	29.911
O_2 %	10.217	Molecular Weight (wet)	29.176
CO_2 %	9.387	Stack Pressure	29.061
		Feet per Second	12.594
Standard CFH	5,128,064	Actual CFM	116324.16
K Standard CFH	85.468	DSCFM	80199.21

Field Calculations

Raw Data Table

Instrument	ppm or %	Zero	Span	Cylinder Value	Gas Corrected for Calibration	
O_2 (dry)	10.22	0.11	11.09	11.10	**10.22**	dry
CO_2 (wet)	8.93	0.04	8.48	8.36	**8.81**	wet

Moisture	6.16	**Standard CFH**	**5,128,064**
Fuel Factor C	1877	K Standard CFM	85.468
DSCFM	80199		

Results

Start Time	**7:07 AM**
Stop Time	**7:13 AM**
Standard CFH	**5,128,000**
CO_2 %, wet	**8.81**
WAF applied	**0.9900**

MSI / Manitowoc PU
Manitowoc, WI
S20 Boiler Stack

7/29/2014
Test 1H Run 6
High Load (190 Klbs/Hr)

Volumetric Flow Rate Data

Number of Sample Points 16

Point Number		Delta p	Sq. root delta p	Temperature	Time
1	A-1	0.039	0.197	237	7:14 AM
2	A-2	0.038	0.195	237	
3	A-3	0.031	0.176	237	
4	A-4	0.037	0.192	237	
5	B-1	0.043	0.207	237	
6	B-2	0.048	0.219	237	
7	B-3	0.043	0.207	237	
8	B-4	0.036	0.190	237	
9	C-1	0.046	0.214	237	
10	C-2	0.045	0.212	237	
11	C-3	0.046	0.214	237	
12	C-4	0.035	0.187	237	
13	D-1	0.037	0.192	238	
14	D-2	0.043	0.207	238	
15	D-3	0.044	0.210	238	
16	D-4	0.038	0.195	238	7:20 AM
Average		0.041	0.201	237	

Moisture Content Data	
Dry Bulb (°F)	237
Wet Bulb (°F)	116.0
TRA	1.17
Vapor Pressure of Water	3.08
ZT	121.00
PM	180.22
Barometric Pressure	29.09
Standard Meter Volume	
Moisture Content	6.20
O_2 %	10.217
CO_2 %	9.391
Standard CFH	5,113,814
K Standard CFH	85.23

Flow Rate Data	
Static Pressure	-0.43
Pitot Coefficient	0.813
Duct Width (in.)	0.00
Duct Length (in.)	0.00
Duct Area (ft^2)	0.00
Stack Diameter (in.)	168.00
Stack Area (ft^2)	153.94
Molecular Weight (dry)	29.911
Molecular Weight (wet)	29.172
Stack Pressure	29.058
Feet per Second	12.547
Actual CFM	115887.99
DSCFM	79944.4

Field Calculations

Raw Data Table

Instrument	ppm or %	Zero	Span	Cylinder Value	Gas Corrected for Calibration	
O_2 (dry)	10.22	0.11	11.09	11.10	**10.22**	dry
CO_2 (wet)	8.93	0.04	8.48	8.36	**8.81**	wet

Moisture	6.20	**Standard CFH**	5,113,814
Fuel Factor C	1877	K Standard CFM	85.23
DSCFM	79944		

Results

Start Time	**7:14 AM**
Stop Time	**7:20 AM**
Standard CFH	**5,114,000**
CO_2 %, wet	**8.81**
WAF applied	**0.9900**

MSI / Manitowoc PU
Manitowoc, WI
S20 Boiler Stack
7/29/2014
Run 4-6

Time	$\%O_2$, d	$\%\ CO_2$, w
7:00	10.418488	8.409308
7:01	10.24832	8.572708
7:02	10.297342	8.569754
7:03	10.25792	8.446496
7:04	10.246012	8.651856
7:05	10.460012	8.554114
7:06	10.479528	9.2012
7:07	10.231424	8.934082
7:08	10.209006	8.916504
7:09	10.22609	8.855994
7:10	10.267138	8.5492
7:11	10.329956	8.794516
7:12	10.241192	8.937982
7:13	10.18032	8.661662
7:14	10.129502	9.373548
7:15	10.175692	9.271328
7:16	10.243856	8.282983
7:17	10.152338	9.41341
7:18	10.286318	8.929216
7:19	10.164458	8.856986
7:20	10.108082	8.943864
7:21	10.194392	9.03944
7:22	10.15412	8.90873
7:23	10.138778	9.295666
7:24	10.186912	9.26547
7:25	10.026286	8.970186
7:26	10.194568	9.122302
7:27	10.252388	8.705608
7:28	10.171588	9.074528
7:29	10.205608	9.09988
7:30	10.162682	8.718318
7:31	10.233542	9.190496
7:32	10.34236	9.208028
7:33	10.271042	8.641108
7:34	10.255948	8.95752
7:35	10.102184	8.902848
7:36	10.205432	9.32681
7:37	10.375304	8.859916
7:38	10.105576	9.251858
7:39	10.048182	9.435556
7:40	10.22234	8.90677
7:41	10.161432	8.653818
7:42	10.019518	9.377422
7:43	10.117364	8.943864
7:44	10.254636	9.370594
7:45	10.27436	8.925294
7:46	10.241302	8.978952
7:47	10.176338	9.048182
7:48	10.143528	8.396576
Average	**10.216**	**8.933**

MSI / Manitowoc PU
Manitowoc, WI
S20 Boiler Stack

7/29/2014
Test 1H Run 7
High Load (190 Klbs/Hr)

Volumetric Flow Rate Data

Number of Sample Points 16

Point Number		Delta p	Sq. root delta p	Temperature	Time
1	A-1	0.041	0.202	238	7:21 AM
2	A-2	0.037	0.192	238	
3	A-3	0.029	0.170	238	
4	A-4	0.038	0.195	238	
5	B-1	0.043	0.207	238	
6	B-2	0.048	0.219	238	
7	B-3	0.049	0.221	238	
8	B-4	0.032	0.179	238	
9	C-1	0.041	0.202	238	
10	C-2	0.042	0.205	238	
11	C-3	0.044	0.210	238	
12	C-4	0.034	0.184	238	
13	D-1	0.038	0.195	238	
14	D-2	0.042	0.205	238	
15	D-3	0.044	0.210	238	
16	D-4	0.035	0.187	238	7:27 AM
Average		0.040	0.199	238	

Moisture Content Data		Flow Rate Data	
Dry Bulb (°F)	238		
Wet Bulb (°F)	116.0	Static Pressure	-0.44
TRA	1.17	Pitot Coefficient	0.813
Vapor Pressure of Water	3.08		
ZT	122.00	Duct Width (in.)	0.00
PM	179.16	Duct Length (in.)	0.00
Barometric Pressure	29.09	Duct Area (ft^2)	0.00
		Stack Diameter (in.)	168.00
Standard Meter Volume		Stack Area (ft^2)	153.94
Moisture Content	6.17		
		Molecular Weight (dry)	29.911
O_2 %	10.217	Molecular Weight (wet)	29.176
CO_2 %	9.387	Stack Pressure	29.058
		Feet per Second	12.429
Standard CFH	5,059,966	Actual CFM	114793.95
K Standard CFH	84.333	DSCFM	79133.07

Field Calculations

Raw Data Table

Instrument	ppm or %	Zero	Span	Cylinder Value	Gas Corrected for Calibration	
O_2 (dry)	10.22	0.11	11.09	11.1	**10.22**	dry
CO_2 (wet)	8.93	0.04	8.48	8.4	**8.81**	wet

Moisture	6.17	**Standard CFH**	**5,059,966**
Fuel Factor C	1877	K Standard CFM	84.333
DSCFM	79133		

Results

Start Time	**7:21 AM**
Stop Time	**7:27 AM**
Standard CFH	**5,060,000**
CO_2 %, wet	**8.81**
WAF applied	**0.9900**

MSI / Manitowoc PU
Manitowoc, WI
S20 Boiler Stack

7/29/2014
Test 1H Run 8
High Load (190 Klbs/Hr)

Volumetric Flow Rate Data

Number of Sample Points 16

Point Number		Delta p	Sq. root delta p	Temperature	Time
1	A-1	0.040	0.200	237	7:28 AM
2	A-2	0.038	0.195	237	
3	A-3	0.034	0.184	237	
4	A-4	0.046	0.214	237	
5	B-1	0.042	0.205	237	
6	B-2	0.050	0.224	237	
7	B-3	0.043	0.207	237	
8	B-4	0.034	0.184	237	
9	C-1	0.044	0.210	237	
10	C-2	0.048	0.219	237	
11	C-3	0.048	0.219	237	
12	C-4	0.033	0.182	237	
13	D-1	0.042	0.205	237	
14	D-2	0.044	0.210	237	
15	D-3	0.038	0.195	237	
16	D-4	0.034	0.184	237	7:34 AM
Average		0.041	0.202	237	

Moisture Content Data	
Dry Bulb (°F)	237
Wet Bulb (°F)	116.0
TRA	1.17
Vapor Pressure of Water	3.08
ZT	121.00
PM	180.22
Barometric Pressure	29.09
Standard Meter Volume	
Moisture Content	6.20
O_2 %	10.217
CO_2 %	9.391
Standard CFH	5,147,660
K Standard CFH	85.794

Flow Rate Data	
Static Pressure	-0.44
Pitot Coefficient	0.813
Duct Width (in.)	0.00
Duct Length (in.)	0.00
Duct Area (ft^2)	0.00
Stack Diameter (in.)	168.00
Stack Area (ft^2)	153.94
Molecular Weight (dry)	29.911
Molecular Weight (wet)	29.172
Stack Pressure	29.058
Feet per Second	12.626
Actual CFM	116616.14
DSCFM	80473.29

Field Calculations

Raw Data Table

Instrument	ppm or %	Zero	Span	Cylinder Value	Gas Corrected for Calibration	
O_2 (dry)	10.22	0.11	11.09	11.1	**10.22**	dry
CO_2 (wet)	8.93	0.04	8.48	8.4	**8.81**	wet

Moisture	6.20	**Standard CFH**	**5,147,660**
Fuel Factor C	1877	K Standard CFM	85.794
DSCFM	80473		

Results

Start Time	**7:28 AM**
Stop Time	**7:34 AM**
Standard CFH	**5,148,000**
CO_2 %, wet	**8.81**
WAF applied	**0.9900**

MSI / Manitowoc PU
Manitowoc, WI
S20 Boiler Stack

7/29/2014
Test 1H Run 9
High Load (190 Klbs/Hr)

Volumetric Flow Rate Data

Number of Sample Points 16

Point Number		Delta p	Sq. root delta p	Temperature	Time
1	A-1	0.045	0.212	237	7:35 AM
2	A-2	0.037	0.192	237	
3	A-3	0.033	0.182	237	
4	A-4	0.048	0.219	237	
5	B-1	0.044	0.210	237	
6	B-2	0.046	0.214	237	
7	B-3	0.039	0.197	237	
8	B-4	0.036	0.190	237	
9	C-1	0.041	0.202	237	
10	C-2	0.047	0.217	237	
11	C-3	0.044	0.210	237	
12	C-4	0.038	0.195	237	
13	D-1	0.042	0.205	237	
14	D-2	0.040	0.200	237	
15	D-3	0.042	0.205	237	
16	D-4	0.035	0.187	237	7:41 AM
Average		0.041	0.202	237	

Moisture Content Data		Flow Rate Data	
Dry Bulb (°F)	237		
Wet Bulb (°F)	116.0	Static Pressure	-0.43
TRA	1.17	Pitot Coefficient	0.813
Vapor Pressure of Water	3.08		
ZT	121.00	Duct Width (in.)	0.00
PM	180.22	Duct Length (in.)	0.00
Barometric Pressure	29.09	Duct Area (ft^2)	0.00
		Stack Diameter (in.)	168.00
Standard Meter Volume		Stack Area (ft^2)	153.94
Moisture Content	6.20		
		Molecular Weight (dry)	29.911
O_2 %	10.217	Molecular Weight (wet)	29.172
CO_2 %	9.391	Stack Pressure	29.058
		Feet per Second	12.625
Standard CFH	5,147,564	Actual CFM	116611.01
K Standard CFH	85.793	DSCFM	80472.02

Field Calculations

Raw Data Table

Instrument	ppm or %	Zero	Span	Cylinder Value	Gas Corrected for Calibration	
O_2 (dry)	10.22	0.11	11.09	11.1	**10.22**	dry
CO_2 (wet)	8.93	0.04	8.48	8.4	**8.81**	wet

Moisture	6.20	**Standard CFH**	**5,147,564**
Fuel Factor C	1877	K Standard CFM	85.793
DSCFM	80472		

Results

Start Time	**7:35 AM**
Stop Time	**7:41 AM**
Standard CFH	**5,148,000**
CO_2 %, wet	**8.81**
WAF applied	**0.9900**

MSI / Manitowoc PU
Manitowoc, WI
S20 Boiler Stack
7/29/2014
Run 7-9

Time	$\%O_2$, d	$\% CO_2$, w
7:00	10.418488	8.409308
7:01	10.24832	8.572708
7:02	10.297342	8.569754
7:03	10.25792	8.446496
7:04	10.246012	8.651856
7:05	10.460012	8.554114
7:06	10.479528	9.2012
7:07	10.231424	8.934082
7:08	10.209006	8.916504
7:09	10.22609	8.855994
7:10	10.267138	8.5492
7:11	10.329956	8.794516
7:12	10.241192	8.937982
7:13	10.18032	8.661662
7:14	10.129502	9.373548
7:15	10.175692	9.271328
7:16	10.243856	8.282983
7:17	10.152338	9.41341
7:18	10.286318	8.929216
7:19	10.164458	8.856986
7:20	10.108082	8.943864
7:21	10.194392	9.03944
7:22	10.15412	8.90873
7:23	10.138778	9.295666
7:24	10.186912	9.26547
7:25	10.026286	8.970186
7:26	10.194568	9.122302
7:27	10.252388	8.705608
7:28	10.171588	9.074528
7:29	10.205608	9.09988
7:30	10.162682	8.718318
7:31	10.233542	9.190496
7:32	10.34236	9.208028
7:33	10.271042	8.641108
7:34	10.255948	8.95752
7:35	10.102184	8.902848
7:36	10.205432	9.32681
7:37	10.375304	8.859916
7:38	10.105576	9.251858
7:39	10.048182	9.435556
7:40	10.22234	8.90677
7:41	10.161432	8.653818
7:42	10.019518	9.377422
7:43	10.117364	8.943864
7:44	10.254636	9.370594
7:45	10.27436	8.925294
7:46	10.241302	8.978952
7:47	10.176338	9.048182
7:48	10.143528	8.396576
Average	**10.216**	**8.933**

MSI / Manitowoc PU
Manitowoc, WI
S20 Boiler Stack

7/29/2014
Test 1H Run 10
High Load (190 Klbs/Hr)

Volumetric Flow Rate Data

Number of Sample Points 16

Point Number		Delta p	Sq. root delta p	Temperature	Time
1	A-1	0.039	0.197	237	7:42 AM
2	A-2	0.036	0.190	237	
3	A-3	0.033	0.182	237	
4	A-4	0.030	0.173	237	
5	B-1	0.048	0.219	237	
6	B-2	0.047	0.217	237	
7	B-3	0.039	0.197	237	
8	B-4	0.037	0.192	237	
9	C-1	0.042	0.205	238	
10	C-2	0.043	0.207	238	
11	C-3	0.041	0.202	238	
12	C-4	0.032	0.179	238	
13	D-1	0.040	0.200	238	
14	D-2	0.042	0.205	238	
15	D-3	0.043	0.207	238	
16	D-4	0.039	0.197	238	12:00 AM
Average		0.039	0.198	238	

Moisture Content Data		Flow Rate Data	
Dry Bulb (°F)	237		
Wet Bulb (°F)	116.0	Static Pressure	-0.44
TRA	1.17	Pitot Coefficient	0.813
Vapor Pressure of Water	3.08		
ZT	121.00	Duct Width (in.)	0.00
PM	180.22	Duct Length (in.)	0.00
Barometric Pressure	29.09	Duct Area (ft^2)	0.00
		Stack Diameter (in.)	168.00
Standard Meter Volume		Stack Area (ft^2)	153.94
Moisture Content	6.20		
		Molecular Weight (dry)	29.911
O_2 %	10.217	Molecular Weight (wet)	29.172
CO_2 %	9.391	Stack Pressure	29.058
		Feet per Second	12.371
Standard CFH	5,040,184	Actual CFM	114263.26
K Standard CFH	84.003	DSCFM	78793.12

Field Calculations

Raw Data Table

Instrument	ppm or %	Zero	Span	Cylinder Value	Gas Corrected for Calibration	
O_2 (dry)	10.22	0.11	11.09	11.1	**10.22**	dry
CO_2 (wet)	8.93	0.04	8.48	8.4	**8.81**	wet

Moisture	6.20	**Standard CFH**	**5,040,184**
Fuel Factor C	1877	K Standard CFM	84.003
DSCFM	78793		

Results

Start Time	**7:42 AM**
Stop Time	**12:00 AM**
Standard CFH	**5,040,000**
CO_2 %, wet	**8.81**
WAF applied	**0.9900**

MSI / Manitowoc PU
Manitowoc, WI
S20 Boiler Stack
7/29/2014
Run 10

Time	$\%O_2$, d	$\% CO_2$, w
7:00	10.418488	8.409308
7:01	10.24832	8.572708
7:02	10.297342	8.569754
7:03	10.25792	8.446496
7:04	10.246012	8.651856
7:05	10.460012	8.554114
7:06	10.479528	9.2012
7:07	10.231424	8.934082
7:08	10.209006	8.916504
7:09	10.22609	8.855994
7:10	10.267138	8.5492
7:11	10.329956	8.794516
7:12	10.241192	8.937982
7:13	10.18032	8.661662
7:14	10.129502	9.373548
7:15	10.175692	9.271328
7:16	10.243856	8.282983
7:17	10.152338	9.41341
7:18	10.286318	8.929216
7:19	10.164458	8.856986
7:20	10.108082	8.943864
7:21	10.194392	9.03944
7:22	10.15412	8.90873
7:23	10.138778	9.295666
7:24	10.186912	9.26547
7:25	10.026286	8.970186
7:26	10.194568	9.122302
7:27	10.252388	8.705608
7:28	10.171588	9.074528
7:29	10.205608	9.09988
7:30	10.162682	8.718318
7:31	10.233542	9.190496
7:32	10.34236	9.208028
7:33	10.271042	8.641108
7:34	10.255948	8.95752
7:35	10.102184	8.902848
7:36	10.205432	9.32681
7:37	10.375304	8.859916
7:38	10.105576	9.251858
7:39	10.048182	9.435556
7:40	10.22234	8.90677
7:41	10.161432	8.653818
7:42	10.019518	9.377422
7:43	10.117364	8.943864
7:44	10.254636	9.370594
7:45	10.27436	8.925294
7:46	10.241302	8.978952
7:47	10.176338	9.048182
7:48	10.143528	8.396576
Average	**10.216**	**8.933**

APPENDIX C

FIELD DATA SHEETS

Interpoll Laboratories
(763) 786-6020
EPA Method 2 Field Data Sheet

Job	MSI / Manitowoc PU			
Source	S20 Boiler Stack			
Test	1L	Run 1	Date	7/29/2014
Stack Diameter (in.)	168			
Dry Bulb (°F)	198	Wet Bulb (°F)	109	
Moisture Content (%)	5.46			
Monometer	Normal			
Barometric Pressure	29.04			
Static Pressure +/-	-0.43			
Operators	Aaron Wilson / Andrew Strong			
Pitot No.	2G	Pitot Coeff.	0.8130	

Cross-section View	Elevation View

Low "Normal" Load (80 Klbs/Hr)

Traverse Point Number	Fraction of Diameter	Distance From Stack Wall (in.)	Distance From End of Port (in.)	Velocity	Temperature of Gas (°F)
		Port Length (in.):	14.00		12:25 AM
A-1	0.032	5.38	19.38	0.017	198
A-2	0.105	17.64	31.64	0.015	198
A-3	0.194	32.59	46.59	0.014	198
A-4	0.323	54.26	68.26	0.018	198
B-1				0.018	198
B-2				0.020	198
B-3				0.024	198
B-4				0.022	198
C-1				0.020	198
C-2				0.024	198
C-3				0.024	198
C-4				0.023	198
D-1				0.015	198
D-2				0.019	198
D-3				0.017	198
D-4				0.014	198
Digital Numbers Used:		151, 131		End Time:	12:31 AM

Interpoll Laboratories
(763) 786-6020
EPA Method 2 Field Data Sheet

Job	MSI / Manitowoc PU				
Source	S20 Boiler Stack				
Test	1L	Run 2	Date	7/29/2014	
Stack Diameter (in.)	168				
Dry Bulb (°F)	196	Wet Bulb (°F)	109		
Moisture Content (%)	5.53				
Monometer	Normal				
Barometric Pressure	29.04				
Static Pressure +/-	-0.43				
Operators	Aaron Wilson / Andrew Strong				
Pitot No.	2G	Pitot Coeff.	0.8130		

Cross-section View	Elevation View

Low "Normal" Load (80 Klbs/Hr)

Traverse Point Number	Fraction of Diameter	Distance From Stack Wall (in.)	Distance From End of Port (in.)	Velocity	Temperature of Gas (°F)
		Port Length (in.):	14.00	Start Time:	12:55 AM
A-1	0.032	5.38	19.38	0.017	196
A-2	0.105	17.64	31.64	0.016	196
A-3	0.194	32.59	46.59	0.015	196
A-4	0.323	54.26	68.26	0.015	196
B-1				0.018	196
B-2				0.021	196
B-3				0.022	196
B-4				0.023	196
C-1				0.019	196
C-2				0.023	196
C-3				0.024	196
C-4				0.023	196
D-1				0.015	196
D-2				0.018	196
D-3				0.017	196
D-4				0.014	196
Digital Numbers Used:		151, 131		End Time:	1:01 AM

Interpoll Laboratories
(763) 786-6020

EPA Method 2 Field Data Sheet

Job	MSI / Manitowoc PU				
Source	S20 Boiler Stack				
Test	1L	Run 3	Date	7/29/2014	
Stack Diameter (in.)	168				
Dry Bulb (°F)	196	Wet Bulb (°F)	108		
Moisture Content (%)	5.23				
Monometer	Normal				
Barometric Pressure	29.04				
Static Pressure +/-	-0.44				
Operators	Aaron Wilson / Andrew Strong				
Pitot No.	2G	Pitot Coeff.	0.8130		

Cross-section View	Elevation View

Low "Normal" Load (80 Klbs/Hr)

Traverse Point Number	Fraction of Diameter	Distance From Stack Wall (in.)	Distance From End of Port (in.)	Velocity	Temperature of Gas (°F)
		Port Length (in.):	14.00	Start Time:	1:25 AM
A-1	0.032	5.38	19.38	0.016	196
A-2	0.105	17.64	31.64	0.017	196
A-3	0.194	32.59	46.59	0.015	196
A-4	0.323	54.26	68.26	0.015	196
B-1				0.019	196
B-2				0.022	196
B-3				0.022	196
B-4				0.024	196
C-1				0.019	197
C-2				0.023	197
C-3				0.024	197
C-4				0.023	197
D-1				0.016	197
D-2				0.018	197
D-3				0.018	197
D-4				0.015	197
Digital Numbers Used:		151, 131		End Time:	1:31 AM

Interpoll Laboratories
(763) 786-6020

EPA Method 2 Field Data Sheet

Job	MSI / Manitowoc PU			
Source	S20 Boiler Stack			
Test	1L	Run 4	Date	7/29/2014
Stack Diameter (in.)	168			
Dry Bulb (°F)	197	Wet Bulb (°F)	108	
Moisture Content (%)	5.21			
Monometer	Normal			
Barometric Pressure	29.04			
Static Pressure +/-	-0.44			
Operators	Aaron Wilson / Andrew Strong			
Pitot No.	2G	Pitot Coeff.	0.8130	

Cross-section View	Elevation View

Low "Normal" Load (80 Klbs/Hr)

Traverse Point Number	Fraction of Diameter	Distance From Stack Wall (in.)	Distance From End of Port (in.)	Velocity	Temperature of Gas (°F)
		Port Length (in.):	14.00	Start Time:	1:55 AM
A-1	0.032	5.38	19.38	0.014	197
A-2	0.105	17.64	31.64	0.014	197
A-3	0.194	32.59	46.59	0.015	197
A-4	0.323	54.26	68.26	0.016	197
B-1				0.019	197
B-2				0.020	197
B-3				0.022	197
B-4				0.023	197
C-1				0.018	197
C-2				0.022	197
C-3				0.023	197
C-4				0.022	197
D-1				0.015	197
D-2				0.017	197
D-3				0.018	197
D-4				0.014	197
Digital Numbers Used:		151, 131		End Time:	2:01 AM

Interpoll Laboratories
(763) 786-6020

EPA Method 2 Field Data Sheet

Job	MSI / Manitowoc PU				
Source	S20 Boiler Stack				
Test	1L	Run 5	Date	7/29/2014	
Stack Diameter (in.)	168				
Dry Bulb (°F)	197	Wet Bulb (°F)	108		
Moisture Content (%)	5.19				
Monometer	Normal				
Barometric Pressure	29.04				
Static Pressure +/-	-0.39				
Operators	Aaron Wilson / Andrew Strong				
Pitot No.	2G	Pitot Coeff.	0.8130		

Cross-section View	Elevation View

Low "Normal" Load (80 Klbs/Hr)

Traverse Point Number	Fraction of Diameter	Distance From Stack Wall (in.)	Distance From End of Port (in.)	Velocity	Temperature of Gas (°F)
		Port Length (in.):	14.00	Start Time:	2:25 AM
A-1	0.032	5.38	19.38	0.012	197
A-2	0.105	17.64	31.64	0.013	197
A-3	0.194	32.59	46.59	0.015	197
A-4	0.323	54.26	68.26	0.015	197
B-1				0.019	197
B-2				0.020	197
B-3				0.022	197
B-4				0.023	197
C-1				0.019	198
C-2				0.021	198
C-3				0.020	198
C-4				0.022	198
D-1				0.014	198
D-2				0.015	198
D-3				0.017	198
D-4				0.014	198
Digital Numbers Used:		151, 131		End Time:	2:31 AM

Interpoll Laboratories
(763) 786-6020

EPA Method 2 Field Data Sheet

Job	MSI / Manitowoc PU				
Source	S20 Boiler Stack				
Test	1L	Run 6	Date	7/29/2014	Cross-section View / Elevation View
Stack Diameter (in.)	168				
Dry Bulb (°F)	198	Wet Bulb (°F)	108		
Moisture Content (%)	5.15				
Monometer	Normal				
Barometric Pressure	29.04				
Static Pressure +/-	-0.41				
Operators	Aaron Wilson / Andrew Strong				
Pitot No.	2G	Pitot Coeff.	0.8130		

Low "Normal" Load (80 Klbs/Hr)

Traverse Point Number	Fraction of Diameter	Distance From Stack Wall (in.)	Distance From End of Port (in.)	Velocity	Temperature of Gas (°F)
		Port Length (in.):	14.00	Start Time:	2:55 AM
A-1	0.032	5.38	19.38	0.012	198
A-2	0.105	17.64	31.64	0.013	198
A-3	0.194	32.59	46.59	0.015	198
A-4	0.323	54.26	68.26	0.014	198
B-1				0.020	198
B-2				0.020	198
B-3				0.021	198
B-4				0.020	198
C-1				0.019	199
C-2				0.020	199
C-3				0.019	199
C-4				0.021	199
D-1				0.013	199
D-2				0.014	199
D-3				0.017	199
D-4				0.014	199
Digital Numbers Used:		151, 131		End Time:	3:01 AM

Interpoll Laboratories
(763) 786-6020

EPA Method 2 Field Data Sheet

Job	MSI / Manitowoc PU				
Source	S20 Boiler Stack				
Test	1L	Run 7	Date	7/29/2014	
Stack Diameter (in.)	168				
Dry Bulb (°F)	199	Wet Bulb (°F)	109		
Moisture Content (%)	5.40				
Monometer	Normal				
Barometric Pressure	29.04				
Static Pressure +/-	-0.40				
Operators	Aaron Wilson / Andrew Strong				
Pitot No.	2G	Pitot Coeff.	0.8130		

Cross-section View	Elevation View

Low "Normal" Load (80 Klbs/Hr)

Traverse Point Number	Fraction of Diameter	Distance From Stack Wall (in.)	Distance From End of Port (in.)	Velocity	Temperature of Gas (°F)
		Port Length (in.):	14.00	Start Time:	3:25 AM
A-1	0.032	5.38	19.38	0.014	199
A-2	0.105	17.64	31.64	0.015	199
A-3	0.194	32.59	46.59	0.015	199
A-4	0.323	54.26	68.26	0.014	199
B-1				0.019	199
B-2				0.022	199
B-3				0.022	199
B-4				0.020	199
C-1				0.019	200
C-2				0.021	200
C-3				0.023	200
C-4				0.021	200
D-1				0.015	200
D-2				0.015	200
D-3				0.017	200
D-4				0.014	200
Digital Numbers Used:		151, 131		End Time:	3:31 AM

Interpoll Laboratories
(763) 786-6020

EPA Method 2 Field Data Sheet

Job	MSI / Manitowoc PU				
Source	S20 Boiler Stack				
Test	1L	Run	8	Date	7/29/2014
Stack Diameter (in.)	168				
Dry Bulb (°F)	199	Wet Bulb (°F)	108		
Moisture Content (%)	5.13				
Monometer	Normal				
Barometric Pressure	29.04				
Static Pressure +/-	-0.40				
Operators	Aaron Wilson / Andrew Strong				
Pitot No.	2G	Pitot Coeff.	0.8130		

Cross-section View	Elevation View

Low "Normal" Load (80 Klbs/Hr)

Traverse Point Number	Fraction of Diameter	Distance From Stack Wall (in.)	Distance From End of Port (in.)	Velocity	Temperature of Gas (°F)
		Port Length (in.):	14.00	Start Time:	3:55 AM
A-1	0.032	5.38	19.38	0.013	199
A-2	0.105	17.64	31.64	0.014	199
A-3	0.194	32.59	46.59	0.015	199
A-4	0.323	54.26	68.26	0.014	199
B-1				0.020	199
B-2				0.022	199
B-3				0.020	199
B-4				0.019	199
C-1				0.020	199
C-2				0.021	199
C-3				0.023	199
C-4				0.022	199
D-1				0.014	199
D-2				0.015	199
D-3				0.017	199
D-4				0.013	199
Digital Numbers Used:		151, 131		End Time:	4:01 AM

Interpoll Laboratories
(763) 786-6020

EPA Method 2 Field Data Sheet

Job	MSI / Manitowoc PU			
Source	S20 Boiler Stack			
Test	1L	Run 9	Date	7/29/2014
Stack Diameter (in.)	168			
Dry Bulb (°F)	198	Wet Bulb (°F)	108	
Moisture Content (%)	5.15			
Monometer	Normal			
Barometric Pressure	29.04			
Static Pressure +/-	-0.42			
Operators	Aaron Wilson / Andrew Strong			
Pitot No.	2G	Pitot Coeff.	0.8130	

Cross-section View	Elevation View

Low "Normal" Load (80 Klbs/Hr)

Traverse Point Number	Fraction of Diameter	Distance From Stack Wall (in.)	Distance From End of Port (in.)	Velocity	Temperature of Gas (°F)
		Port Length (in.):	14.00	Start Time:	4:25 AM
A-1	0.032	5.38	19.38	0.015	198
A-2	0.105	17.64	31.64	0.014	198
A-3	0.194	32.59	46.59	0.015	198
A-4	0.323	54.26	68.26	0.014	198
B-1				0.021	198
B-2				0.022	198
B-3				0.020	198
B-4				0.020	198
C-1				0.022	199
C-2				0.021	199
C-3				0.024	199
C-4				0.021	199
D-1				0.014	199
D-2				0.015	199
D-3				0.016	199
D-4				0.013	199
Digital Numbers Used:		151, 131		End Time:	4:31 AM

Interpoll Laboratories
(763) 786-6020

EPA Method 2 Field Data Sheet

Job	MSI / Manitowoc PU				
Source	S20 Boiler Stack				
Test	1L	Run 10	Date	7/29/2014	
Stack Diameter (in.)	168				
Dry Bulb (°F)	199	Wet Bulb (°F)	108		
Moisture Content (%)	5.13				
Monometer	Normal				
Barometric Pressure	29.04				
Static Pressure +/-	-0.41				
Operators	Aaron Wilson / Andrew Strong				
Pitot No.	2G	Pitot Coeff.	0.8130		

Cross-section View	Elevation View

Low "Normal" Load (80 Klbs/Hr)

Traverse Point Number	Fraction of Diameter	Distance From Stack Wall (in.)	Distance From End of Port (in.)	Velocity	Temperature of Gas (°F)
		Port Length (in.):	14.00	Start Time:	4:55 AM
A-1	0.032	5.38	19.38	0.014	199
A-2	0.105	17.64	31.64	0.014	199
A-3	0.194	32.59	46.59	0.015	199
A-4	0.323	54.26	68.26	0.016	199
B-1				0.022	199
B-2				0.020	199
B-3				0.020	199
B-4				0.020	199
C-1				0.022	199
C-2				0.022	199
C-3				0.023	199
C-4				0.021	199
D-1				0.015	199
D-2				0.015	199
D-3				0.016	199
D-4				0.013	199
Digital Numbers Used:		151, 131		End Time:	5:01 AM

Interpoll Laboratories
(763) 786-6020
EPA Method 2 Field Data Sheet

Job	MSI / Manitowoc PU				
Source	S20 Boiler Stack				
Test	1H	Run 1	Date	7/29/2014	
Stack Diameter (in.)	168				
Dry Bulb (°F)	240		Wet Bulb (°F)	115	
Moisture Content (%)	5.76				
Monometer	Expanded				
Barometric Pressure	29.09				
Static Pressure +/-	-0.39				
Operators	Aaron Wilson / Andrew Strong				
Pitot No.	2G		Pitot Coeff.	0.8130	

Cross-section View	Elevation View

High Load (190 Klbs/Hr)

Traverse Point Number	Fraction of Diameter	Distance From Stack Wall (in.)	Distance From End of Port (in.)	Velocity	Temperature of Gas (°F)
		Port Length (in.):	14.00	Start Time:	6:30 AM
A-1	0.032	5.38	19.38	0.038	240
A-2	0.105	17.64	31.64	0.042	240
A-3	0.194	32.59	46.59	0.039	240
A-4	0.323	54.26	68.26	0.044	240
B-1				0.040	240
B-2				0.048	240
B-3				0.046	240
B-4				0.031	240
C-1				0.030	240
C-2				0.043	240
C-3				0.041	240
C-4				0.034	240
D-1				0.033	240
D-2				0.035	240
D-3				0.037	240
D-4				0.032	240
Digital Numbers Used:		131, 151		End Time:	6:36 AM

Interpoll Laboratories
(763) 786-6020
EPA Method 2 Field Data Sheet

Job	MSI / Manitowoc PU				
Source	S20 Boiler Stack				
Test	1H	Run 2	Date	7/29/2014	
Stack Diameter (in.)	168				
Dry Bulb (°F)	240	Wet Bulb (°F)	115		
Moisture Content (%)	5.76				
Monometer	Expanded				
Barometric Pressure	29.09				
Static Pressure +/-	-0.39				
Operators	Aaron Wilson / Andrew Strong				
Pitot No.	2G	Pitot Coeff.	0.8130		

Cross-section View	Elevation View

High Load (190 Klbs/Hr)

Traverse Point Number	Fraction of Diameter	Distance From Stack Wall (in.)	Distance From End of Port (in.)	Velocity	Temperature of Gas (°F)
		Port Length (in.):	14.00	Start Time:	6:37 AM
A-1	0.032	5.38	19.38	0.043	240
A-2	0.105	17.64	31.64	0.040	240
A-3	0.194	32.59	46.59	0.035	240
A-4	0.323	54.26	68.26	0.037	240
B-1				0.041	240
B-2				0.049	240
B-3				0.042	240
B-4				0.029	240
C-1				0.038	240
C-2				0.042	240
C-3				0.040	240
C-4				0.032	240
D-1				0.042	239
D-2				0.044	239
D-3				0.037	239
D-4				0.036	239
Digital Numbers Used:		131, 151		End Time:	6:43 AM

Interpoll Laboratories
(763) 786-6020

EPA Method 2 Field Data Sheet

Job	MSI / Manitowoc PU				
Source	S20 Boiler Stack				
Test	1H	Run 3	Date	7/29/2014	
Stack Diameter (in.)	168				
Dry Bulb (°F)	240	Wet Bulb (°F)	116		
Moisture Content (%)	6.09				
Monometer	Expanded				
Barometric Pressure	29.09				
Static Pressure +/-	-0.42				
Operators	Aaron Wilson / Andrew Strong				
Pitot No.	2G	Pitot Coeff.	0.8130		

Cross-section View	Elevation View

High Load (190 Klbs/Hr)

Traverse Point Number	Fraction of Diameter	Distance From Stack Wall (in.)	Distance From End of Port (in.)	Velocity	Temperature of Gas (°F)
		Port Length (in.):	14.00	Start Time:	6:44 AM
A-1	0.032	5.38	19.38	0.039	240
A-2	0.105	17.64	31.64	0.037	240
A-3	0.194	32.59	46.59	0.038	240
A-4	0.323	54.26	68.26	0.035	240
B-1				0.048	240
B-2				0.046	240
B-3				0.049	240
B-4				0.034	240
C-1				0.036	240
C-2				0.042	240
C-3				0.043	240
C-4				0.040	240
D-1				0.039	240
D-2				0.046	240
D-3				0.039	240
D-4				0.038	240
Digital Numbers Used:		131, 151		End Time:	6:50 AM

Interpoll Laboratories
(763) 786-6020

EPA Method 2 Field Data Sheet

Job	MSI / Manitowoc PU				
Source	S20 Boiler Stack				
Test	1H	Run 4	Date	7/29/2014	
Stack Diameter (in.)	168				
Dry Bulb (°F)	241	Wet Bulb (°F)	116		
Moisture Content (%)	6.05				
Monometer	Expanded				
Barometric Pressure	29.09				
Static Pressure +/-	-0.04				
Operators	Aaron Wilson / Andrew Strong				
Pitot No.	2G	Pitot Coeff.	0.8130		

Cross-section	Elevation
View	View

High Load (190 Klbs/Hr)

Traverse Point Number	Fraction of Diameter	Distance From Stack Wall (in.)	Distance From End of Port (in.)	Velocity	Temperature of Gas (°F)
		Port Length (in.):	14.00	Start Time:	7:00 AM
A-1	0.032	5.38	19.38	0.039	241
A-2	0.105	17.64	31.64	0.034	241
A-3	0.194	32.59	46.59	0.037	241
A-4	0.323	54.26	68.26	0.039	241
B-1				0.041	241
B-2				0.046	241
B-3				0.048	241
B-4				0.033	241
C-1				0.042	241
C-2				0.043	241
C-3				0.037	241
C-4				0.035	241
D-1				0.038	241
D-2				0.042	241
D-3				0.038	241
D-4				0.035	241
Digital Numbers Used:		131, 151		End Time:	7:06 AM

Interpoll Laboratories
(763) 786-6020

EPA Method 2 Field Data Sheet

Job	MSI / Manitowoc PU				
Source	S20 Boiler Stack				
Test	1H	Run	5	Date	7/29/2014
Stack Diameter (in.)	168				
Dry Bulb (°F)	238	Wet Bulb (°F)	116		
Moisture Content (%)	6.16				
Monometer	Expanded				
Barometric Pressure	29.09				
Static Pressure +/-	-0.39				
Operators	Aaron Wilson / Andrew Strong				
Pitot No.	2G	Pitot Coeff.	0.8130		

Cross-section View	Elevation View

High Load (190 Klbs/Hr)

Traverse Point Number	Fraction of Diameter	Distance From Stack Wall (in.)	Distance From End of Port (in.)	Velocity	Temperature of Gas (°F)
		Port Length (in.):	14.00	Start Time:	7:07 AM
A-1	0.032	5.38	19.38	0.038	238
A-2	0.105	17.64	31.64	0.036	238
A-3	0.194	32.59	46.59	0.034	238
A-4	0.323	54.26	68.26	0.041	238
B-1				0.043	238
B-2				0.046	238
B-3				0.046	238
B-4				0.033	238
C-1				0.043	238
C-2				0.046	238
C-3				0.043	238
C-4				0.035	238
D-1				0.043	238
D-2				0.045	238
D-3				0.042	238
D-4				0.039	238
Digital Numbers Used:		131, 151		End Time:	7:13 AM

Interpoll Laboratories
(763) 786-6020

EPA Method 2 Field Data Sheet

Job	MSI / Manitowoc PU				
Source	S20 Boiler Stack				
Test	1H	Run 6	Date	7/29/2014	
Stack Diameter (in.)	168				
Dry Bulb (°F)	237	Wet Bulb (°F)	116		
Moisture Content (%)	6.20				
Monometer	Expanded				
Barometric Pressure	29.09				
Static Pressure +/-	-0.43				
Operators	Aaron Wilson / Andrew Strong				
Pitot No.	2G	Pitot Coeff.	0.8130		

Cross-section View	Elevation View

High Load (190 Klbs/Hr)

Traverse Point Number	Fraction of Diameter	Distance From Stack Wall (in.)	Distance From End of Port (in.)	Velocity	Temperature of Gas (°F)
		Port Length (in.):	14.00	Start Time:	7:14 AM
A-1	0.032	5.38	19.38	0.039	237
A-2	0.105	17.64	31.64	0.038	237
A-3	0.194	32.59	46.59	0.031	237
A-4	0.323	54.26	68.26	0.037	237
B-1				0.043	237
B-2				0.048	237
B-3				0.043	237
B-4				0.036	237
C-1				0.046	237
C-2				0.045	237
C-3				0.046	237
C-4				0.035	237
D-1				0.037	238
D-2				0.043	238
D-3				0.044	238
D-4				0.038	238
Digital Numbers Used:		131, 151		End Time:	7:20 AM

Interpoll Laboratories
(763) 786-6020

EPA Method 2 Field Data Sheet

Job	MSI / Manitowoc PU				
Source	S20 Boiler Stack				
Test	1H	Run 7	Date	7/29/2014	
Stack Diameter (in.)	168				
Dry Bulb (°F)	238	Wet Bulb (°F)	116		
Moisture Content (%)	6.17				
Monometer	Expanded				
Barometric Pressure	29.09				
Static Pressure +/-	-0.44				
Operators	Aaron Wilson / Andrew Strong				
Pitot No.	2G	Pitot Coeff.	0.8130		

Cross-section View	Elevation View

High Load (190 Klbs/Hr)

Traverse Point Number	Fraction of Diameter	Distance From Stack Wall (in.)	Distance From End of Port (in.)	Velocity	Temperature of Gas (°F)
		Port Length (in.):	14.00	Start Time:	7:21 AM
A-1	0.032	5.38	19.38	0.041	238
A-2	0.105	17.64	31.64	0.037	238
A-3	0.194	32.59	46.59	0.029	238
A-4	0.323	54.26	68.26	0.038	238
B-1				0.043	238
B-2				0.048	238
B-3				0.049	238
B-4				0.032	238
C-1				0.041	238
C-2				0.042	238
C-3				0.044	238
C-4				0.034	238
D-1				0.038	238
D-2				0.042	238
D-3				0.044	238
D-4				0.035	238
Digital Numbers Used:		131, 151		End Time:	7:27 AM

Interpoll Laboratories
(763) 786-6020

EPA Method 2 Field Data Sheet

Job	MSI / Manitowoc PU				
Source	S20 Boiler Stack				
Test	1H	Run 8	Date	7/29/2014	
Stack Diameter (in.)	168				
Dry Bulb (°F)	237	Wet Bulb (°F)	116		
Moisture Content (%)	6.20				
Monometer	Expanded				
Barometric Pressure	29.09				
Static Pressure +/-	-0.44				
Operators	Aaron Wilson / Andrew Strong				
Pitot No.	2G	Pitot Coeff.	0.8130		

Cross-section View	Elevation View

High Load (190 Klbs/Hr)

Traverse Point Number	Fraction of Diameter	Distance From Stack Wall (in.)	Distance From End of Port (in.)	Velocity	Temperature of Gas (°F)
		Port Length (in.):	14.00	Start Time:	7:28 AM
A-1	0.032	5.38	19.38	0.040	237
A-2	0.105	17.64	31.64	0.038	237
A-3	0.194	32.59	46.59	0.034	237
A-4	0.323	54.26	68.26	0.046	237
B-1				0.042	237
B-2				0.050	237
B-3				0.043	237
B-4				0.034	237
C-1				0.044	237
C-2				0.048	237
C-3				0.048	237
C-4				0.033	237
D-1				0.042	237
D-2				0.044	237
D-3				0.038	237
D-4				0.034	237
Digital Numbers Used:		131, 151		End Time:	7:34 AM

Interpoll Laboratories
(763) 786-6020

EPA Method 2 Field Data Sheet

Job	MSI / Manitowoc PU				
Source	S20 Boiler Stack				
Test	1H	Run 9	Date	7/29/2014	
Stack Diameter (in.)	168				
Dry Bulb (°F)	237	Wet Bulb (°F)	116		
Moisture Content (%)	6.20				
Monometer	Expanded				
Barometric Pressure	29.09				
Static Pressure +/-	-0.43				
Operators	Aaron Wilson / Andrew Strong				
Pitot No.	2G	Pitot Coeff.	0.8130		

Cross-section View	Elevation View

High Load (190 Klbs/Hr)

Traverse Point Number	Fraction of Diameter	Distance From Stack Wall (in.)	Distance From End of Port (in.)	Velocity	Temperature of Gas (°F)
		Port Length (in.):	14.00	Start Time:	7:35 AM
A-1	0.032	5.38	19.38	0.045	237
A-2	0.105	17.64	31.64	0.037	237
A-3	0.194	32.59	46.59	0.033	237
A-4	0.323	54.26	68.26	0.048	237
B-1				0.044	237
B-2				0.046	237
B-3				0.039	237
B-4				0.036	237
C-1				0.041	237
C-2				0.047	237
C-3				0.044	237
C-4				0.038	237
D-1				0.042	237
D-2				0.040	237
D-3				0.042	237
D-4				0.035	237
Digital Numbers Used:		131, 151		End Time:	7:41 AM

Interpoll Laboratories
(763) 786-6020

EPA Method 2 Field Data Sheet

Job	MSI / Manitowoc PU				
Source	S20 Boiler Stack				
Test	1H	Run 10	Date	7/29/2014	
Stack Diameter (in.)	168				
Dry Bulb (°F)	237	Wet Bulb (°F)	116		
Moisture Content (%)	6.20				
Monometer	Expanded				
Barometric Pressure	29.09				
Static Pressure +/-	-0.44				
Operators	Aaron Wilson / Andrew Strong				
Pitot No.	2G	Pitot Coeff.	0.8130		

Cross-section View	Elevation View

High Load (190 Klbs/Hr)

Traverse Point Number	Fraction of Diameter	Distance From Stack Wall (in.)	Distance From End of Port (in.)	Velocity	Temperature of Gas (°F)
		Port Length (in.):	14.00	Start Time:	7:42 AM
A-1	0.032	5.38	19.38	0.039	237
A-2	0.105	17.64	31.64	0.036	237
A-3	0.194	32.59	46.59	0.033	237
A-4	0.323	54.26	68.26	0.030	237
B-1				0.048	237
B-2				0.047	237
B-3				0.039	237
B-4				0.037	237
C-1				0.042	238
C-2				0.043	238
C-3				0.041	238
C-4				0.032	238
D-1				0.040	238
D-2				0.042	238
D-3				0.043	238
D-4				0.039	238
				End Time:	7:48 AM
Digital Numbers Used:		131, 151			

APPENDIX D

MEASUREMENT SYSTEM PERFORMANCE SPECIFICATIONS

MSI / Manitowoc PU
Manitowoc, WI
S20 Boiler Stack
7/29/2014
Test 1L

SO_2(TEI Model 43i)

	Cylinder Value (ppm)	Analyzer Response (ppm)	Difference (ppm)	Span Value (ppm)	% of Span
Zero	0.00	0.04	0.04	111.00	0.04
Mid Level	49.40	49.14	0.26	111.00	0.23
High Level	111.00	110.16	0.84	111.00	0.76

CO (TEI Model 43i)

	Cylinder Value (ppm)	Analyzer Response (ppm)	Difference (ppm)	Span Value (ppm)	% of Span
Zero	0.00	0.05	0.05	50.40	0.10
Mid Level	50.40	50.40	0.00	50.40	0.00
High Level	117.00	116.00	1.00	117.00	0.85

NOx (TEI Model 42i)

	Cylinder Value (ppm)	Analyzer Response (ppm)	Difference (ppm)	Span Value (ppm)	% of Span
Zero	0.00	0.01	0.01	111.00	0.01
Mid Level	49.00	49.04	0.04	111.00	0.04
High Level	111.00	109.50	1.50	111.00	1.35

CO_2 (TEI Model 410i)

	Cylinder Value (ppm)	Analyzer Response (ppm)	Difference (ppm)	Span Value (%)	% of Span
Zero	0.00	0.03	0.03	16.50	0.18
Mid Level	8.36	8.52	0.16	16.50	0.97
High Level	16.50	16.33	0.17	16.50	1.03

O_2 (Servomex Series 1400)

	Cylinder Value (ppm)	Analyzer Response (ppm)	Difference (ppm)	Span Value (%)	% of Span
Zero	0.00	0.05	0.05	21.20	0.24
Mid Level	11.10	11.11	0.01	21.20	0.05
High Level	21.20	20.94	0.26	21.20	1.23

**** All Calibrations must be within 2% of the span value...

Calibration Drift

MSI / Manitowoc PU
Manitowoc, WI
S20 Boiler Stack
7/29/2014
Test 1L

O_2

		Initial	Pre-Cal Bias	Final	Post-cal Bias	Avg.	% Drift of Span
1	Zero	0.05	0.00%	0.15	0.47%	**0.10**	**0.47%**
	Upscale	11.11	0.00%	11.09	-0.09%	**11.10**	**-0.09%**
2	Zero	0.15	0.47%	0.12	0.33%	**0.14**	**-0.14%**
	Upscale	11.09	-0.09%	11.10	-0.05%	**11.10**	**0.05%**
3	Zero	0.12	0.33%	0.17	0.57%	**0.15**	**0.24%**
	Upscale	11.10	-0.05%	11.10	-0.05%	**11.10**	**0.00%**
4	Zero	0.17	0.57%	0.17	0.57%	**0.17**	**0.00%**
	Upscale	11.10	-0.05%	11.05	-0.28%	**11.08**	**-0.24%**
5	Zero	0.17	0.57%	0.16	0.52%	**0.17**	**-0.05%**
	Upscale	11.05	-0.28%	11.05	-0.28%	**11.05**	**0.00%**
6	Zero	0.16	0.52%	0.16	0.52%	**0.16**	**0.00%**
	Upscale	11.05	-0.28%	11.04	-0.33%	**11.05**	**-0.05%**
7	Zero	0.16	0.52%	0.15	0.47%	**0.16**	**-0.05%**
	Upscale	11.04	-0.33%	11.03	-0.38%	**11.04**	**-0.05%**
8	Zero	0.15	0.47%	0.14	0.42%	**0.15**	**-0.05%**
	Upscale	11.03	-0.38%	11.03	-0.38%	**11.03**	**0.00%**
9	Zero	0.14	0.42%	0.14	0.42%	**0.14**	**0.00%**
	Upscale	11.03	-0.38%	11.04	-0.33%	**11.04**	**0.05%**
10	Zero	0.14	0.42%	0.14	0.42%	**0.14**	**0.00%**
	Upscale	11.04	-0.33%	11.05	-0.28%	**11.05**	**0.05%**

	Cylinder Value	Analyzer Value
Zero	0.00 %	0.05 %
Upscale	11.10 %	11.11 %
Span	21.20 %	21.20 %

** All Drift Calibrations must be within 3% of the span value...
** All Bias Calibrations must be within 5% of the span value...

Calibration Drift

MSI / Manitowoc PU
Manitowoc, WI
S20 Boiler Stack
7/29/2014
Test 1L

CO_2

		Initial	Pre-Cal Bias	Final	Post-Cal Bias	Avg.	% Drift of Span
1	Zero	0.03	0.00%	0.03	0.00%	0.03	0.00%
	Upscale	8.52	0.00%	8.50	-0.12%	8.51	-0.12%
2	Zero	0.03	0.00%	0.05	0.12%	0.04	0.12%
	Upscale	8.50	-0.12%	8.52	0.00%	8.51	0.12%
3	Zero	0.05	0.12%	0.06	0.18%	0.06	0.06%
	Upscale	8.52	0.00%	8.55	0.18%	8.54	0.18%
4	Zero	0.06	0.18%	0.05	0.12%	0.06	-0.06%
	Upscale	8.55	0.18%	8.51	-0.06%	8.53	-0.24%
5	Zero	0.05	0.12%	0.03	0.00%	0.04	-0.12%
	Upscale	8.51	-0.06%	8.44	-0.48%	8.48	-0.42%
6	Zero	0.03	0.00%	0.03	0.00%	0.03	0.00%
	Upscale	8.44	-0.48%	8.49	-0.18%	8.47	0.30%
7	Zero	0.03	0.00%	0.05	0.12%	0.04	0.12%
	Upscale	8.49	-0.18%	8.42	-0.61%	8.46	-0.42%
8	Zero	0.05	0.12%	0.05	0.12%	0.05	0.00%
	Upscale	8.42	-0.61%	8.44	-0.48%	8.43	0.12%
9	Zero	0.05	0.12%	0.05	0.12%	0.05	0.00%
	Upscale	8.44	-0.48%	8.46	-0.36%	8.45	0.12%
10	Zero	0.05	0.12%	0.03	0.00%	0.04	-0.12%
	Upscale	8.46	-0.36%	8.47	-0.30%	8.47	0.06%

	Cylinder Value	Analyzer Response
Zero	0.00 ppm	0.03 ppm
Upscale	8.36 ppm	8.52 ppm
Span	16.50 ppm	16.50 ppm

** All Drift Calibrations must be within 3% of the span value...
** All Bias Calibrations must be within 5% of the span value...

Calibration Drift

MSI / Manitowoc PU
Manitowoc, WI
S20 Boiler Stack
7/29/2014
Test 1L

Nox

		Initial	Pre-Cal Bias	Final	Post-Cal Bias	Avg.	% Drift of Span
1	Zero	0.01	0.00%	0.03	0.02%	**0.02**	**0.02%**
	Upscale	49.04	0.00%	48.29	-0.68%	**48.67**	**-0.68%**
2	Zero	0.03	0.02%	0.04	0.03%	**0.04**	**0.01%**
	Upscale	48.29	-0.68%	48.34	-0.63%	**48.32**	**0.05%**
3	Zero	0.04	0.03%	0.05	0.04%	**0.05**	**0.01%**
	Upscale	48.34	-0.63%	48.40	-0.58%	**48.37**	**0.05%**
4	Zero	0.05	0.04%	0.05	0.04%	**0.05**	**0.00%**
	Upscale	48.40	-0.58%	48.26	-0.70%	**48.33**	**-0.13%**
5	Zero	0.05	0.04%	0.03	0.02%	**0.04**	**-0.02%**
	Upscale	48.26	-0.70%	48.28	-0.68%	**48.27**	**0.02%**
6	Zero	0.03	0.02%	0.03	0.02%	**0.03**	**0.00%**
	Upscale	48.28	-0.68%	48.30	-0.67%	**48.29**	**0.02%**
7	Zero	0.03	3.00%	0.03	0.02%	**0.03**	**-2.98%**
	Upscale	48.30	-0.67%	48.27	-0.69%	**48.29**	**-0.03%**
8	Zero	0.03	0.02%	0.03	0.02%	**0.03**	**0.00%**
	Upscale	48.27	-0.69%	48.35	-0.62%	**48.31**	**0.07%**
9	Zero	0.03	0.02%	0.03	0.02%	**0.03**	**0.00%**
	Upscale	48.35	-0.62%	48.33	-0.64%	**48.34**	**-0.02%**
10	Zero	0.03	0.02%	0.05	0.04%	**0.04**	**0.02%**
	Upscale	48.33	-0.64%	48.40	-0.58%	**48.37**	**0.06%**

	Cylinder Value	Analyzer Response
Zero	0.00 ppm	0.01 ppm
Upscale	49.00 ppm	49.04 ppm
Span	111.00 ppm	111.00 ppm

** All Drift Calibrations must be within 3% of the span value...
** All Bias Calibrations must be within 5% of the span value...

Calibration Drift

MSI / Manitowoc PU
Manitowoc, WI
S20 Boiler Stack
7/29/2014
Test 1L

SO_2

		Initial	Pre-Cal Bias	Final	Post-Cal Bias	Avg.	% Drift of Span
1	Zero	0.04	0.00%	0.03	-0.01%	**0.04**	**-0.01%**
	Upscale	49.14	0.00%	49.27	0.12%	**49.21**	**0.12%**
2	Zero	0.03	-0.01%	0.05	0.01%	**0.04**	**0.02%**
	Upscale	49.27	0.12%	49.28	0.13%	**49.28**	**0.01%**
3	Zero	0.05	0.01%	0.03	-0.01%	**0.04**	**-0.02%**
	Upscale	49.28	0.13%	49.25	0.10%	**49.27**	**-0.03%**
4	Zero	0.03	-0.01%	0.05	0.01%	**0.04**	**0.02%**
	Upscale	49.25	0.10%	49.34	0.18%	**49.30**	**0.08%**
5	Zero	0.05	0.01%	0.04	0.00%	**0.05**	**-0.01%**
	Upscale	49.34	0.18%	49.31	0.15%	**49.33**	**-0.03%**
6	Zero	0.04	0.00%	0.01	-0.03%	**0.03**	**-0.03%**
	Upscale	49.31	0.15%	49.28	0.13%	**49.30**	**-0.03%**
7	Zero	0.01	-0.03%	0.03	-0.01%	**0.02**	**0.02%**
	Upscale	49.28	0.13%	49.30	0.14%	**49.29**	**0.02%**
8	Zero	0.03	-0.01%	0.01	-0.03%	**0.02**	**-0.02%**
	Upscale	49.30	0.14%	49.27	0.12%	**49.29**	**-0.03%**
9	Zero	0.01	-0.03%	0.02	-0.02%	**0.02**	**0.01%**
	Upscale	49.27	0.12%	49.29	0.14%	**49.28**	**0.02%**
10	Zero	0.02	-0.02%	0.01	-0.03%	**0.02**	**-0.01%**
	Upscale	49.29	0.14%	49.30	0.14%	**49.30**	**0.01%**

	Cylinder Value	Analyzer Response
Zero	0.00 ppm	0.04 ppm
Upscale	49.40 ppm	49.14 ppm
Span	111.00 ppm	111.00 ppm

** All Drift Calibrations must be within 3% of the span value...
** All Bias Calibrations must be within 5% of the span value...

Calibration Drift

MSI / Manitowoc PU
Manitowoc, WI
S20 Boiler Stack
7/29/2014
Test 1L

CO

		Initial	Pre-Cal Bias	Final	Post-Cal Bias	Avg.	% Drift of Span
1	Zero	0.05	0.00%	0.04	-0.01%	**0.05**	**-0.01%**
	Upscale	50.40	0.00%	50.24	-0.14%	**50.32**	**-0.14%**
2	Zero	0.04	-0.01%	0.03	-0.02%	**0.04**	**-0.01%**
	Upscale	50.24	-0.14%	50.26	-0.12%	**50.25**	**0.02%**
3	Zero	0.03	-0.02%	0.04	-0.01%	**0.04**	**0.01%**
	Upscale	50.26	-0.12%	50.30	-0.09%	**50.28**	**0.03%**
4	Zero	0.04	-0.01%	0.02	-0.03%	**0.03**	**-0.02%**
	Upscale	50.30	-0.09%	50.54	0.12%	**50.42**	**0.21%**
5	Zero	0.02	-0.03%	0.02	-0.03%	**0.02**	**0.00%**
	Upscale	50.54	0.12%	50.55	0.13%	**50.55**	**0.01%**
6	Zero	0.02	-0.03%	0.02	-0.03%	**0.02**	**0.00%**
	Upscale	50.55	0.13%	50.54	0.12%	**50.55**	**-0.01%**
7	Zero	0.02	-0.03%	0.03	-0.02%	**0.03**	**0.01%**
	Upscale	50.54	0.12%	50.55	0.13%	**50.55**	**0.01%**
8	Zero	0.03	-0.02%	0.04	-0.01%	**0.04**	**0.01%**
	Upscale	50.55	0.13%	50.45	0.04%	**50.50**	**-0.09%**
9	Zero	0.04	-0.01%	0.05	0.00%	**0.05**	**0.01%**
	Upscale	50.45	0.04%	50.46	0.05%	**50.46**	**0.01%**
10	Zero	0.05	0.00%	0.04	-0.01%	**0.05**	**-0.01%**
	Upscale	50.46	0.05%	50.40	0.00%	**50.43**	**-0.05%**

	Cylinder Value	Analyzer Response
Zero	0.00 ppm	0.05 ppm
Upscale	50.40 ppm	50.40 ppm
Span	117.00 ppm	116.00 ppm

** All Drift Calibrations must be within 3% of the span value...
** All Bias Calibrations must be within 5% of the span value...

Interpoll Laboratories
(763) 786-6020

Stationary Gas Turbine Nox Determination
Method 20 NO_2 to NO Converter Efficiency Datasheet

Job	MSI / Manitowoc PU
Source	S20 Boiler Stack
Date	7/29/2014
Operator	Aaron Wilson / Andrew Strong
Analyzer	TECO Model 42i (NOx)
Analyzer S/N	510511561

Time (min)	NOx Response
11:34 PM	58.720
11:35 PM	58.562
11:36 PM	58.092
11:37 PM	58.012
11:38 PM	58.202
11:39 PM	58.260
11:40 PM	58.151
11:41 PM	58.949
11:42 PM	58.703
11:43 PM	58.745
11:44 PM	58.447
11:45 PM	58.039
11:46 PM	58.836
11:47 PM	58.061
11:48 PM	58.942
11:49 PM	58.394
11:50 PM	58.877
11:51 PM	58.922
11:52 PM	58.017
11:53 PM	58.374
11:54 PM	58.867
11:55 PM	58.851
11:56 PM	58.202
11:57 PM	58.177
11:58 PM	58.266
11:59 PM	58.368
12:00 AM	58.507
12:01 AM	58.123
12:02 AM	58.319
12:03 AM	58.311
Highest Peak Value	58.95
Percent Drift	1.1%
System Pass of Fail	**PASS**

Instructions: Add mid-level gas to a leak-free Tedlar bag. Dilute the gas with 20.9% Oxygen to approximately 1:1. Then immediately attach the bag to the instrument and record the Nox Reponses for 30 minutes. The system is OK if the response at the end is less than 2.0 % of the highest response.

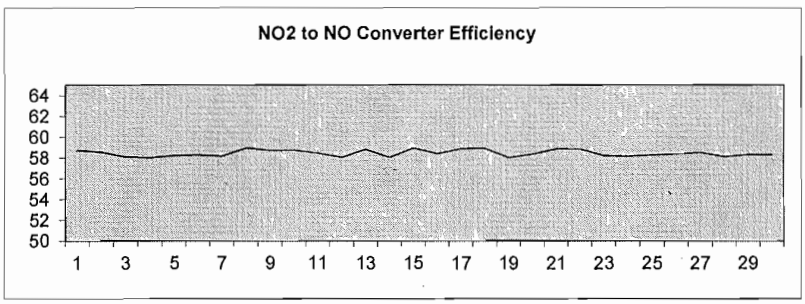

INTERPOLL LABORATORIES, INC.
(763) 786-6020

EPA Appendix A Stratification Test

Job:	MSI / Manitowoc PU	**Date:**	7/29/2014
Source:	S20 Boiler Stack	**Personnel:**	Aaron Wilson / Andrew Strong
Test	1L	**Bar. Press. (in. Hg)**	29.04
PDT Number	151, 131		
Measurement Response Time:		113	seconds

Stack Diameter 168.00 **in.** **Port Length in.** 14.00

Traverse Point	Fraction of Diameter	Distance From Stack Wall (in.)	Distance From End of Port (in.)	Time (min)	SO2 ppm (wet)	Nox ppm (wet)	O2 % (dry)	CO_2 % (wet)
1	0.17	28.00	**42.00**	0:25	46.26	20.96	15.05	5.74
2	0.50	84.00	**98.00**	0:32	50.30	20.02	14.98	5.90
3	0.83	140.00	**154.00**	0:39	50.55	20.25	15.14	6.01
Average					**49.03**	**20.41**	**15.06**	**5.88**
			Largest Value		50.55	20.96	15.14	6.01
			Smallest Value		46.26	20.02	14.98	5.74
			%Deviation		**9.27%**	**4.73%**	**1.08%**	**4.77%**

* A three point traverse was used for each test run.

MSI / Manitowoc PU
Manitowoc, WI
S20 Boiler Stack
7/29/2014
Stratification Test Data

Time	SO_2 ppm, w	Nox ppm, w	$\%O_2$, d	% CO_2, w
0:25:01	44.62	23.42	15.44	5.55
0:26:01	45.28	21.25	15.32	6.34
0:27:01	48.30	23.22	14.26	5.44
0:28:01	45.60	20.71	15.13	6.08
0:29:01	46.77	18.80	14.87	5.83
0:30:01	47.39	20.43	15.11	5.11
0:31:01	45.87	18.91	15.20	5.81
Average	**46.26**	**20.96**	**15.05**	**5.74**

Time	SO_2 ppm, w	Nox ppm, w	$\%O_2$, d	% CO_2, w
0:32:01	48.27	20.40	14.97	5.79
0:33:01	51.86	22.12	14.84	5.19
0:34:01	48.26	18.43	15.23	6.18
0:35:01	52.18	20.19	14.84	6.34
0:36:01	49.24	17.98	14.95	4.94
0:37:01	49.46	18.64	15.23	5.92
0:38:01	52.79	22.36	14.81	6.93
Average	**50.30**	**20.02**	**14.98**	**5.90**

Time	SO_2 ppm, w	Nox ppm, w	$\%O_2$, d	% CO_2, w
0:39:01	49.17	17.65	15.13	6.03
0:40:01	52.76	21.22	14.80	5.89
0:41:01	53.33	22.27	15.14	6.23
0:42:01	50.42	18.58	14.99	6.16
0:43:01	51.29	22.14	15.74	6.12
0:44:01	51.58	21.22	15.00	5.40
0:45:01	45.27	18.66	15.19	6.24
Average	**50.55**	**20.25**	**15.14**	**6.01**

MSI / Manitowoc PU
Manitowoc, WI
S20 Boiler Stack
7/29/2014
Test 1H

CO_2 (TEI Model 410i)

	Cylinder Value (ppm)	Analyzer Response (ppm)	Difference (ppm)	Span Value (ppm)	% of Span
Zero	0.00	0.05	0.05	16.50	0.30
Mid Level	8.36	8.48	0.12	16.50	0.73
High Level	16.50	16.28	0.22	16.50	1.33

O_2 (Servomex Series 1400)

	Cylinder Value (ppm)	Analyzer Response (ppm)	Difference (ppm)	Span Value (ppm)	% of Span
Zero	0.00	0.11	0.11	21.20	0.52
Mid Level	11.10	11.04	0.06	21.20	0.28
High Level	21.20	20.90	0.30	21.20	1.42

**** All Calibrations must be within 2% of the span value...

Calibration Drift

MSI / Manitowoc PU
Manitowoc, WI
S20 Boiler Stack
7/29/2014
Test 1H

O_2

		Initial	Pre-Cal Bias	Final	Post-cal Bias	Avg.	% Drift of Span
1	Zero	0.11	0.00%	0.09	-0.09%	**0.10**	**-0.09%**
	Upscale	11.04	0.00%	11.07	0.14%	**11.06**	**0.14%**
2	Zero	0.11	0.00%	0.09	-0.09%	**0.10**	**-0.09%**
	Upscale	11.04	0.00%	11.07	0.14%	**11.06**	**0.14%**
3	Zero	0.11	0.00%	0.09	-0.09%	**0.10**	**-0.09%**
	Upscale	11.04	0.00%	11.07	0.14%	**11.06**	**0.14%**
4	Zero	0.09	-0.09%	0.11	0.00%	**0.10**	**0.09%**
	Upscale	11.07	0.14%	11.09	0.24%	**11.08**	**0.09%**
5	Zero	0.11	0.00%	0.11	0.00%	**0.11**	**0.00%**
	Upscale	11.09	0.24%	11.09	0.24%	**11.09**	**0.00%**
6	Zero	0.11	0.00%	0.11	0.00%	**0.11**	**0.00%**
	Upscale	11.09	0.24%	11.09	0.24%	**11.09**	**0.00%**
7	Zero	0.11	0.00%	0.11	0.00%	**0.11**	**0.00%**
	Upscale	11.09	0.24%	11.09	0.24%	**11.09**	**0.00%**
8	Zero	0.11	0.00%	0.11	0.00%	**0.11**	**0.00%**
	Upscale	11.09	0.24%	11.09	0.24%	**11.09**	**0.00%**
9	Zero	0.11	0.00%	0.11	0.00%	**0.11**	**0.00%**
	Upscale	11.09	0.24%	11.09	0.24%	**11.09**	**0.00%**
10	Zero	0.11	0.00%	0.11	0.00%	**0.11**	**0.00%**
	Upscale	11.09	0.24%	11.09	0.24%	**11.09**	**0.00%**

	Cylinder Value	Analyzer Value
Zero	0.00 %	0.11 %
Upscale	11.10 %	11.04 %
Span	21.20 %	21.2 %

** All Drift Calibrations must be within 3% of the span value...
** All Bias Calibrations must be within 5% of the span value...

Calibration Drift

MSI / Manitowoc PU
Manitowoc, WI
S20 Boiler Stack
7/29/2014
Test 1H

CO_2

		Initial	Pre-Cal Bias	Final	Post-Cal Bias	Avg.	% Drift of Span
1	Zero	0.05	0.00%	0.03	-0.12%	0.04	-0.12%
	Upscale	8.48	0.00%	8.53	0.30%	8.51	0.30%
2	Zero	0.05	0.00%	0.03	-0.12%	0.04	-0.12%
	Upscale	8.48	0.00%	8.53	0.30%	8.51	0.30%
3	Zero	0.05	0.00%	0.03	-0.12%	0.04	-0.12%
	Upscale	8.48	0.00%	8.53	0.30%	8.51	0.30%
4	Zero	0.03	-0.12%	0.04	-0.06%	0.04	0.06%
	Upscale	8.53	0.30%	8.48	0.00%	8.51	-0.30%
5	Zero	0.04	-0.06%	0.04	-0.06%	0.04	0.00%
	Upscale	8.48	0.00%	8.48	0.00%	8.48	0.00%
6	Zero	0.04	-0.06%	0.04	-0.06%	0.04	0.00%
	Upscale	8.48	0.00%	8.48	0.00%	8.48	0.00%
7	Zero	0.04	-0.06%	0.04	-0.06%	0.04	0.00%
	Upscale	8.48	0.00%	8.48	0.00%	8.48	0.00%
8	Zero	0.04	-0.06%	0.04	-0.06%	0.04	0.00%
	Upscale	8.48	0.00%	8.48	0.00%	8.48	0.00%
9	Zero	0.04	-0.06%	0.04	-0.06%	0.04	0.00%
	Upscale	8.48	0.00%	8.48	0.00%	8.48	0.00%
10	Zero	0.04	-0.06%	0.04	-0.06%	0.04	0.00%
	Upscale	8.48	0.00%	8.48	0.00%	8.48	0.00%

	Cylinder Value	Analyzer Response
Zero	0.00 ppm	0.05 ppm
Upscale	8.36 ppm	8.48 ppm
Span	16.50 ppm	16.50 ppm

** All Drift Calibrations must be within 3% of the span value...
** All Bias Calibrations must be within 5% of the span value...

APPENDIX E

CALIBRATION GAS CERTIFICATION SHEETS

LIQUID TECHNOLOGY CORPORATION

"INDUSTRY LEADER IN SPECIALTY GASES"

Certificate of Analysis

- EPA PROTOCOL GAS -

Customer	Minneapolis Oxygen (Minneapolis, MN)
Date	November 05, 2013
Delivery Receipt	DR-49110
Gas Standard	17.0% CO2, 21.0% Oxygen/Nitrogen - EPA PROTOCOL
Final Analysis Date	October 31, 2013
Expiration Date	October 31, 2021
Part Number	SPC NAE03001

Component	Carbon Dioxide, Oxygen
Balance Gas	Nitrogen

Analytical Data:

DO NOT USE BELOW 100 psig

EPA Protocol, Section No. 2.2, Procedure G-1

Reported Concentrations

Carbon Dioxide: 16.5% +/- 0.16%

Oxygen: 21.2% +/- 0.20%

Nitrogen: Balance

Reference Standards:

SRM/GMIS:	GMIS/GMIS	GMIS
Cylinder Number:	EB-0026839/CC-184404	CC-159090
Concentration:	6.847% CO2/19.87% CO2	20.68% Oxygen/Nitrogen
Expiration Date:	10/03/20 - 02/04/15	04/06/14

Certification Instrumentation

Component:	Carbon Dioxide	Oxygen
Make/Model:	Nicolet 6700	Servomex 244a
Serial Number:	APW1100563	1847
Principal of Measurement:	FTIR	Paramagnetic
Last Calibration:	October 16, 2013	October 17, 2013

Cylinder Data

Cylinder Serial Number:	CC-231281	Cylinder Outlet:	CGA 590
Cylinder Volume:	133 Cubic Feet	Cylinder Pressure:	1900 psig, 70°F

Analytical Uncertainty and NIST Traceability are in compliance with EPA-600/R-12/531.

Certified by: Cole Dylewski

Cole Dylewski

PGVP Vendor ID: E12013

"UNMATCHED EXCELLENCE"
2048 APEX COURT APOPKA, FLORIDA 32703 ~ PHONE (407)-292-2990 FAX (407)-292-3313
WWW.LIQUIDTECHCORP.COM
APOPKA, FL • HOUSTON, TX

LIQUID TECHNOLOGY CORPORATION

"INDUSTRY LEADER IN SPECIALTY GASES"

Certificate of Analysis

- EPA PROTOCOL GAS -

Customer	Minneapolis Oxygen (Minneapolis, MN)
Date	May 09, 2014
Delivery Receipt	DR-51558
Gas Standard	112.5 ppm CO, 112.5 ppm NO, 112.5 ppm SO2/Nitrogen - EPA PROTOCOL
Final Analysis Date	May 09, 2014
Expiration Date	May 09, 2022
Part Number	SPC NAE04050

DO NOT USE BELOW 100 psig

Analytical Data:
EPA Protocol, Section No. 2.2, Procedure G-1.

Reported Concentrations
Carbon Monoxide: 117 ppm +/- 1.0 ppm
Nitric Oxide: 111 ppm +/- 1.0 ppm
Sulfur Dioxide: 111 ppm +/- 1.1 ppm
Nitrogen: Balance
Total NOx: 111 ppm
**** NOx for Reference Use Only ****

Reference Standards

SRM/GMIS:	GMIS/GMIS	GMIS/GMIS	GMIS/GMIS
Cylinder Number:	EB-0015869/CC-185111	ND-45697/ND-45699	CC-54548/CC-251490
Concentration:	106.09 ppm/257.47 ppm CO	97.467 ppm/245.47 ppm NO	102.43 ppm/507.87 ppm SO2
Expiration Date:	12/07/20 - 12/07/20	08/23/15 - 08/23/20	06/14/20 - 11/02/20

Certification Instrumentation

Component:	Carbon Monoxide	Nitric Oxide	Sulfur Dioxide
Make/Model:	NEXUS 6700	NEXUS 6700	NEXUS 6700
Serial Number:	APW1100563	APW1100563	APW1100563
Principal of Measurement:	FTIR	FTIR	FTIR
Last Calibration:	April 10, 2014	April 10, 2014	April 10, 2014

Cylinder Data

Cylinder Number:	EB-0051534	Cylinder Volume:	138 Cubic Feet
Cylinder Outlet:	CGA 660	Cylinder Pressure:	1975 psig, 70°F
Expiration Date:	May 09, 2022		

Analytical Uncertainty and NIST Traceability are in compliance with EPA-600/R-12/531.

Cole Dylewski

Certified by:

Cole Dylewski

PGVP Vendor ID: E12014

"UNMATCHED EXCELLENCE"

2048 APEX COURT, APOPKA, FLORIDA 32703 ~ PHONE (407)-292-2990 FAX (407)-292-3313
WWW.LIQUIDTECHCORP.COM
APOPKA, FL • HOUSTON, TX

LIQUID TECHNOLOGY CORPORATION

"INDUSTRY LEADER IN SPECIALTY GASES"

Certificate of Analysis

- EPA PROTOCOL GAS -

Customer	Minneapolis Oxygen (Minneapolis, MN)
Date	February 07, 2014
Delivery Receipt	DR-50310
Gas Standard	50.0 ppm CO, 50.0 ppm NO, 50.0 ppm SO2/Nitrogen - EPA PROTOCOL
Final Analysis Date	February 07, 2014
Expiration Date	February 07, 2017
Part Number:	SPC NAE04019

DO NOT USE BELOW 100 psig

Analytical Data:
EPA Protocol, Section No. 2.2, Procedure G-1.

Reported Concentrations
Carbon Monoxide: 50.4 ppm +/- 0.48 ppm
Nitric Oxide: 49.0 ppm +/- 0.43 ppm
Sulfur Dioxide: 49.4 ppm +/- 0.48 ppm
Nitrogen: Balance
Total NOx: 49.1 ppm
**** NOx for Reference Use Only ****

Reference Standards

SRM/GMIS:	GMIS	GMIS	GMIS
Cylinder Number:	EB-0017129	ND-45512	EB-0014698
Concentration:	50.81 ppm CO	49.98 ppm NO	50.67 ppm SO2
Expiration Date:	10/20/14	07/18/15	09/20/14

Certification Instrumentation

Component:	Carbon Monoxide	Nitric Oxide	Sulfur Dioxide
Make/Model:	Nicolet 6700	Nicolet 6700	Nicolet 6700
Serial Number:	APW1100563	APW1100563	APW1100563
Principal of Measurement:	FTIR	FTIR	FTIR
Last Calibration:	January 08, 2014	January 15, 2014	January 15, 2014

Cylinder Data

Cylinder Number:	EB-0026779	Cylinder Volume:	136 Cubic Feet
Cylinder Outlet:	CGA 660	Cylinder Pressure:	1950 psig, 70°F
Expiration Date:	February 07, 2017		

Analytical Uncertainty and NIST Traceability are in compliance with EPA-600/R-12/531.

Cole Dylewski

Certified by:

Cole Dylewski

PGVP Vendor ID: E12014

"UNMATCHED EXCELLENCE"
2048 APEX COURT APOPKA, FLORIDA 32703 ~ PHONE (407)-292-2990 FAX (407)-292-3313
WWW.LIQUIDTECHCORP.COM
APOPKA, FL • HOUSTON, TX

LIQUID TECHNOLOGY CORPORATION

"INDUSTRY LEADER IN SPECIALTY GASES"

Certificate of Analysis

- EPA PROTOCOL GAS -

Customer	Minneapolis Oxygen (Minneapolis, MN)
Date	April 04, 2014
Delivery Receipt	DR-51095
Gas Standard	8.50% CO2, 11.0% Oxygen/Nitrogen - EPA PROTOCOL
Part Number:	SPC NAE 03075
Final Analysis Date	March 10, 2014
Expiration Date	March 10, 2022

DO NOT USE BELOW 100 psig

Cylinder Data

Cylinder Serial Number:	EB-0052778	Cylinder Outlet:	CGA 590
Cylinder Volume:	136 Cubic Feet	Cylinder Pressure:	1950 psig, 70°F
Expiration Date:	March 10, 2022		

Analytical Data

EPA Protocol, Section No. 2.2, Procedure G-1

Replicate Concentrations

Carbon Dioxide: 8.36% +/- 0.06%

Oxygen: 11.1% +/- 0.05%

Nitrogen: Balance

Reference Standard(s):

GMIS/SRM:	GMIS/GMIS	GMIS
Cylinder Number:	EB-0026839/CC-185129	CC-231332
Concentration:	6.847% CO2/13.92% CO2	9.97% Oxygen
Expiration Date:	10/13/20 - 06/24/14	04/06/14

Certification Instrumentation

Component:	Carbon Dioxide	Oxygen
Make/Model:	Nicolet 6700	Servomex 244a
Serial Number:	APW1200289	1847
Principal of Measurement:	FTIR	Paramagnetic
Last Calibration:	March 05, 2014	March 05, 2014

Analytical uncertainty and NIST Traceability are in compliance with EPA-600/R-12/531.

Certified by: Cole Dylewski

Cole Dylewski

PGVP Vendor ID: E12014

"UNMATCHED EXCELLENCE"
2048 APEX COURT APOPKA, FLORIDA 32703 ~ PHONE (407)-292-2990 FAX (407)-292-3313
WWW.LIQUIDTECHCORP.COM
APOPKA, FL • HOUSTON, TX

MPU00251

APPENDIX F

GAS ANALYZER SPECIFICATIONS

MODEL 1420 SERVOMEX PARAMAGNETIC O_2 ANALYZER SPECIFICATIONS

Repeatability:	Better than ± 0.2% O2 under constant conditions
Drift	Less than 0.2% O2 per week under constant conditions. (Excluding variation due to barometric pressure changes; reading is proportional to barometric pressure
Outputs	
Display	3 ½ digit LCD reading 0.0 to 100.0% oxygen with over range capability
Output	0 to 1V (non-isolated) for 0 to 100% oxygen available on 'D' type connector located on the back panel of the instrument. Output impedance is less than 10 ohms.
Option	4 – 20mA isolated, Max impedance 500 ohms
Flow alarm output	Change over relay contact rated at 3A/115V ac, 1A/240V ac or 1A/28V dc. 4 sets of single pole changeover contacts. Alarm becomes active when sample gas flow through the analyzer fails
Sample Requirements	
Condition	Clean, dry gas with dew point 5 deg C below ambient temperature
Inlet pressure	0.5 to 3 psig (3.5 to 21kPa). Inlet pressure changes within this range will change the reading by less than 0.1% O2. May be operated up to 10 psig (70kPa) with degraded stability
Flow rate	1.5 to 6 litres/minute approximately depending on sample pressure
Filtering	0.6 micron replaceable filter integral to the automatic flow control device.
Response time	Less than 15 secs. To 90% at an inlet pressure of 3 psig (21kPa)
Inlet/vent connections	¼ inch OD tube (stainless steel) suitable for 6mm ID flexible tubing or ¼ inch OD compression fittings.

Materials exposed to the sample	Stainless steel, Pyrex glass, brass, platinum, epoxy resin, viton, polypropylene and glass fibre filter
Physical Characteristics	
Case	Steel and aluminum finished in epoxy powder paint
Case Classification	IP 20 (IEC 529) when fitted into the Servomex 1400 series 19 inch case
Weight	10Kg (22 lb) approximately
Electrical	
AC Supply	110 to 120V AC or 220 to 240V AC, ±10%, 48 to 62Hz. Voltage selected by a voltage selector integral to the IEC supply plug
Power required	15VA maximum

NO_2, and NO_x concentrations to the front panel display, the analog outputs, and also makes the data available over the serial or ethernet connection.

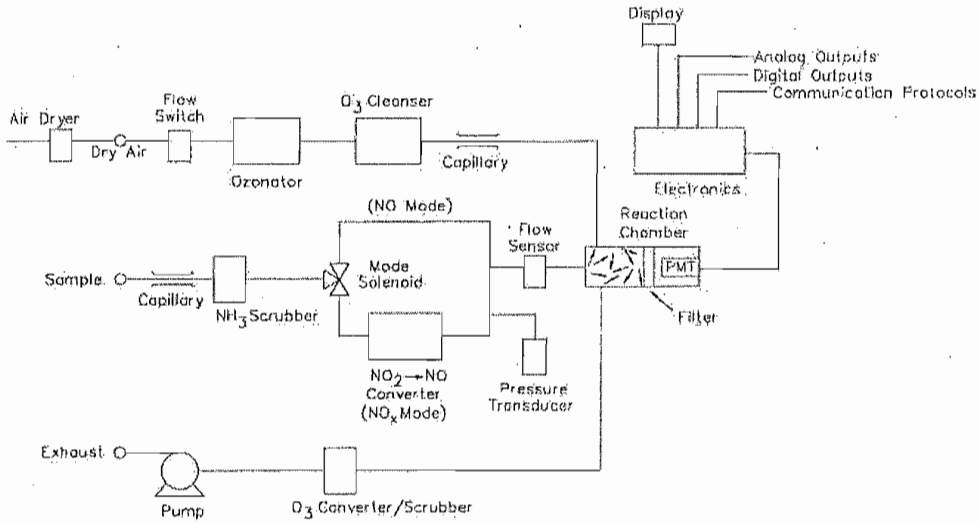

Figure 1-1. Model 42*i* Low Source Flow Schematic

Specifications

Table 1-1. Model 42*i* Low Source Specifications

Preset ranges	0-0.2, 0.5, 1, 2, 5, 10, 20, 50, 100 ppm 0-0.5, 1, 2, 5, 10, 20, 50, 100, 150 mg/m^3
Extended ranges	0-1, 2, 5, 10, 20, 50, 100, 200, 500 ppm 0-2, 5, 10, 20, 50, 100, 200, 500, 750 mg/m^3
Custom ranges	0-0.2 to 100 ppm (0-1 to 500 ppm in extended ranges) 0-0.5 to 150 mg/m^3 (0-2 to 750 mg/m^3 in extended ranges)
Zero noise	0.005 ppm RMS (60 second averaging time)
Lower detectable limit	0.01 ppm (60 second averaging time)
Zero drift (24 hour)	≈ 0.005 ppm
Span drift (24 hour)	± 1% full-scale
Response time (NO/NO_x mode)	15 sec (10 second averaging time) 85 sec (60 second averaging time) 305 sec (300 second averaging time)

MPU00255

Response time (NO mode)	15 sec (10 second averaging time) 65 sec (60 second averaging time) 305 sec (300 second averaging time)
Linearity	± 1% full-scale
Sample flow rate	≈ 25 cc/min. measured at atmospheric pressure
Operating temperature	15–35 °C (may be safely operated over the range of 0–45 °C)*
Power requirements	100 VAC @ 50/60 Hz 115 VAC @ 50/60 Hz 220–240 VAC @ 50/60 Hz 300 watts
Physical dimensions	16.75" (W) X 8.62" (H) X 23" (D)
Weight	Approximately 55 lbs.
Analog outputs	6 voltage outputs; 0–100 mV, 1 V, 5 V, 10 V (User selectable), 5% of full-scale over/under range, 12 bit resolution, user selectable for measurement input
Digital outputs	1 power fail relay Form C, 10 digital relays Form A, user selectable alarm output, relay logic, 100 mA @ 200 VDC
Digital inputs	16 digital inputs, user select programmable, TTL level, pulled high
Serial Ports	1 RS-232 or RS-485 with two connectors, baud rate 1200–115200, data bits, parity, and stop bits, protocols: C-Link, MODBUS, and streaming data (all user selectable)
Ethernet connection	RJ45 connector for 10Mbs Ethernet connection, static or dynamic TCP/IP addressing

*In non condensing environments. Performance specifications based on operation in 15–35 °C range.

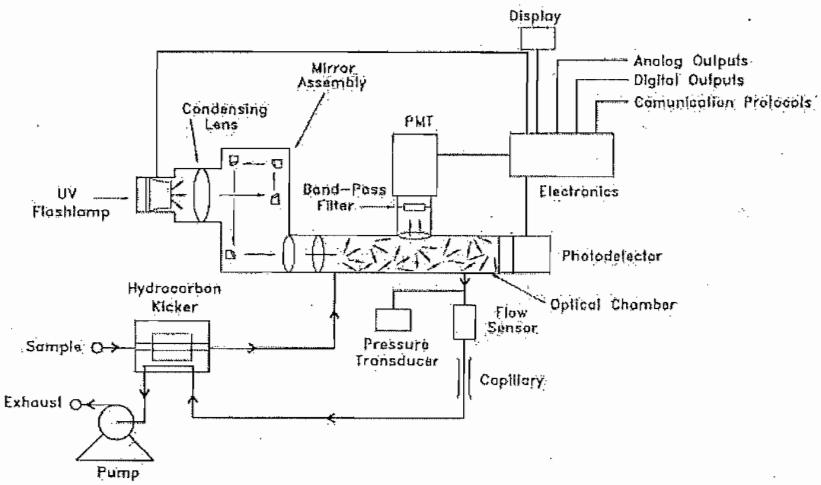

Figure 1-1. Model 43*i* Flow Schematic

Specifications

Table 1-1. Model 43*i* Specifications

Preset ranges	0-0.05, 0.1, 0.2, 0.5, 1, 2, 5, 10 ppm 0-0.2, 0.5, 1, 2, 5, 10, 20, 25 mg/m^3
Extended ranges	0-0.5, 1, 2, 5, 10, 20, 50, 100 ppm 0-2, 5, 10, 20, 50, 100, 200, 250 mg/m^3
Custom ranges	0-0.05 to 10 ppm (0-0.5 to 100 ppm in extended range) 0-0.2 to 25 mg/m^3 (0-2 to 250 mg/m^3 in extended range)
Zero noise	1.0 ppb RMS (10 second averaging time) 0.5 ppb RMS (60 second averaging time) 0.25 ppb RMS (300 second averaging time)
Lower detectable limit	2.0 ppb (10 second averaging time) 1.0 ppb (60 second averaging time) 0.5 ppb (300 second averaging time)
Zero drift (24 hour)	< 1 ppb
Span drift	± 1% full-scale
Response time (in automatic mode)	80 sec (10 second averaging time) 110 sec (60 second averaging time) 320 sec (300 second averaging time)
Linearity	± 1% of full-scale

MPU00257

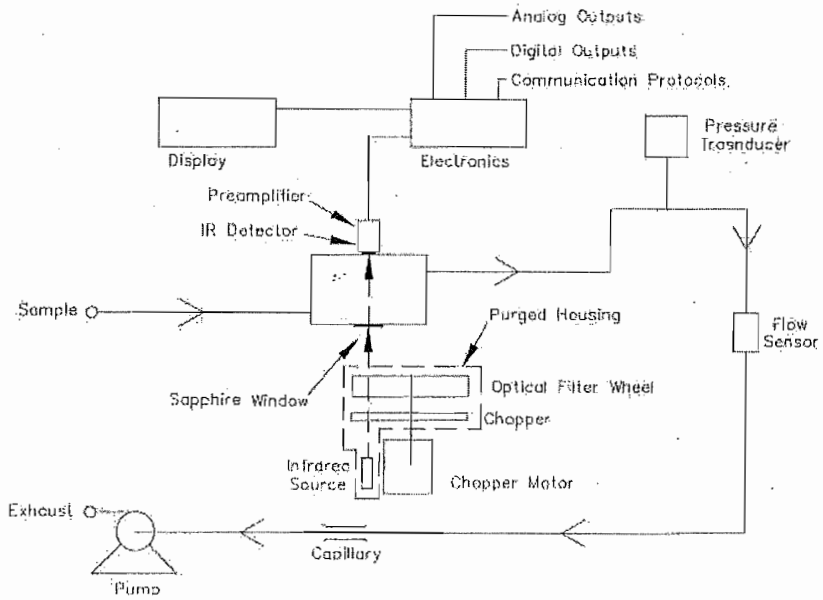

Figure 1-1. Model 410*i* Flow Schematic

Specifications

Table 1-1. Model 410*i* Specifications CO_2

Preset ranges	Standard: 0-200, 500, 1000, 2000, 5000, 10000 ppm High Level: 0-0.5, 1, 2, 5, 10, 20, 25%
Custom ranges	Standard: 0-200 to 10000 ppm High Level: 0-0.5 to 25%
Zero noise	Standard: 0.5 ppm RMS (60 second averaging time) High Level: 20 ppm RMS (60 second averaging time)
Minimum detectable limit	Standard: 1 ppm High Level: 40 ppm
Zero drift (24 hour)	± 1.0 ppm
Span drift (24 hour)	± 2% span concentration
Response time	90 seconds (30 second averaging time)
Linearity	± 1.5% of span (at concentrations of 10 to 100% of span)
Sample flow rate	1.0 LPM
Operating temperature	5–45 °C

Power requirements	100 VAC @ 50/60 Hz 115 VAC @ 50/60 Hz 220–240 VAC @ 50/60 Hz 275 watts
Physical dimensions	16.75" (W) X 8.62" (H) X 23" (D)
Weight	Approximately 39 lbs.
Analog outputs	6 voltage outputs; 0–100 mV, 1, 5, 10 V (User selectable), 5% of full-scale over/under range, 12 bit resolution, user selectable for measurement input
Digital outputs	1 power fail relay Form C, 10 digital relays Form A, user selectable alarm output, relay logic, 100 mA @ 200 VDC
Digital inputs	16 digital inputs, user select programmable, TTL level, pulled high
Serial Ports	1 RS-232 or RS-485 with two connectors, baud rate 1200–115200, Protocols: C-Link, MODBUS, and streaming data (all user selectable)
Ethernet connection	RJ45 connector for 10Mbs Ethernet connection, static or dynamic TCP/IP addressing

APPENDIX G

CEM INSTRUMENT INFORMATION SHEETS

INTERPOLL LABORATORIES, INC.
(763) 786-6020

CEM Relative Accuracy Certification Instrument Information Sheet

Plant Name: Manitowoc Public Utilities

Plant Location: Manitowoc, WI

Pollutant Gas Monitor Data:

Vendor: Thermo
Model: 43i S/N 0908635559
Location: S20 stack
Gas (es): ☑ SO_2 ☐ NOx ☐ CO
Type of System: ☐ In-Situ ☐ Extractive ☑ Dilution
Installation Date: 10 Sept. 09
Start-Up Date: 10 Sept. 09

Diluent Monitor Data:

Vendor: Thermo
Model: 410i S/N 0811429266
Location: S20 stack
Gas: ☐ O_2 ☐ CO_2
Type of System: ☑ In-Situ ☐ Extractive
Installation Date: 08 Sept. 08
Start-Up Date: 08 Sept. 08

Data Recording System:
☐ Strip Chart Recorder ☑ Data Logger System
☑ Computer

Data Recording System:
☐ Strip Chart Recorder ☑ Data Logger System
☑ Computer

Relative Accuracy Certification Units:
☐ ppm, dry ☐ LB/10^6BTU by O_2 F-Factor
☑ ppm, wet ☐ LB/10^6BTU by CO_2 F-Factor
☐ LBS/HR

Output Units:
☐ %O_2, dry ☐ % CO_2, dry
☐ %O_2, wet ☑ % CO_2, wet

Span Value (ppm):
SO_2 0 - 1200
NOx 0 - 500
CO

Span Gas Values (% v/v):

	*********Oxygen*********	***Carbon Dioxide***
Low		5.15
High		17.21

Signature of Person Responsible for Data

9-18-09
Date

MPU00261

INTERPOLL LABORATORIES, INC.
(763) 786-6020

CEM Relative Accuracy Certification Instrument Information Sheet

Plant Name: Manitowoc Public Utilities

Pollutant Gas Monitor Data:

Vendor: Thermo

Model: 421-D S/N 0908635558

Location: 520 stack

Gas (es): ☐ SO_2 ☑ NOx ☐ CO

Type of System: ☐ In-Situ ☐ Extractive ☑ Dilution

Installation Date: 10 Sept. 09

Start-Up Date: 10 Sept. 09

Data Recording System:
☐ Strip Chart Recorder ☑ Data Logger System
☑ Computer

Relative Accuracy Certification Units:
☐ ppm, dry ☐ LB/10^6BTU by O_2 F-Factor
☑ ppm, wet ☑ LB/10^6BTU by CO_2 F-Factor
☐ LBS/HR

Span Value (ppm):

SO_2	0-1200
NOx	0-500
CO	

Signature of Person Responsible for Data

Plant Location: Manitowoc, WI

Diluent Monitor Data:

Vendor: Thermo

Model: 410i S/N 0811429266

Location: 520 stack

Gas: ☐ O_2 ☑ CO_2

Type of System: ☑ In-Situ ☐ Extractive

Installation Date: 08 Sept. 08

Start-Up Date: 09 Sept. 08

Data Recording System:
☐ Strip Chart Recorder ☑ Data Logger System
☑ Computer

Output Units:
☐ $\%O_2$, dry ☐ $\%CO_2$, dry
☐ $\%O_2$, wet ☑ $\%CO_2$, wet

Span Gas Values (% v/v):

	********Oxygen********	***Carbon Dioxide***
Low		J.F. 5.15
High		17.21

9-18-09

Date

INTERPOLL LABORATORIES, INC.
(763) 786-6020

CEM Relative Accuracy Certification Instrument Information Sheet

Plant Name: MANITOWOC Public UTILITIES

Plant Location:

Pollutant Gas Monitor Data:

Vendor: THERMO ENVIRONMENTAL

Model: 48i S/N 48iCM08270019

Location: 520 STACK

Gas (es): ☐ SO2 ☐ NOx ☒ CO

Type of System: ☐ In-Situ ☐ Extractive ☒ Dilution

Probe Manufacturer: EPM

Installation Date: 16 AUG 2012

Start-Up Date: 16 AUG 2012

Data Recording System:
☐ Strip Chart Recorder ☒ Data Logger System
☐ Computer

Relative Accuracy Certification Units:
☐ ppm, dry ☐ LB/106BTU by O2 F-Factor
☒ ppm, wet ☐ LB/106BTU by CO2 F-Factor

Span Value (ppm):

SO2

NOx

CO 100/5000

Signature of Person Responsible for Data

Diluent Monitor Data:

Vendor:

Model: S/N

Location:

Gas: ☐ O2 ☐ CO2

Type of System: ☐ In-Situ ☐ Extractive ☐ Dilution

Installation Date:

Start-Up Date:

Data Recording System:
☐ Strip Chart Recorder ☐ Data Logger System
☐ Computer

Output Units:
☐ %O2, dry ☐ % CO2, dry
☐ %O2, wet ☐ % CO2, wet

Span Gas Values (% v/v):

	*********Oxygen********	***Carbon Dioxide***
Low		
High		

Date

3

MPU00263

APPENDIX H

CEM DATA

S20 GAS RUN 1

Average Data

Plant: Manitowoc Public Utilities
Interval: 1 Minute
Type: Roll
Report Period: 07/29/2014 00:25 Through 07/29/2014 00:45
Time Online Criteria: 1 minute(s)

Source	S20								
Parameter)Unit(	S20CO#M (#/MMBTU)	S20CPCO2 (PERCENT)	S20CPNOX (PPM)	S20CPSO2 (PPM)	S20FFACT (MMBTU/CF)	S20NOX#M (LB/MMBTU)	S20PCO (PPM)	S20SO2#M (LB/MMBTU)	S20STEAM (KLBS/HR)
07/29/14 00:25	0.065	5.9	20.1	45.7	1,877.0	0.076	27.8	0.241	83
07/29/14 00:26	0.063	5.9	19.6	46.3	1,877.0	0.074	27.4	0.245	77
07/29/14 00:27	0.065	5.9	19.9	47.3	1,877.0	0.076	27.7	0.250	78
07/29/14 00:28	0.067	5.9	19.8	47.1	1,877.0	0.075	28.8	0.249	84
07/29/14 00:29	0.066	5.9	19.2	47.7	1,877.0	0.073	28.3	0.252	83
07/29/14 00:30	0.067	5.8	20.0	49.2	1,877.0	0.077	28.8	0.264	76
07/29/14 00:31	0.067	5.9	19.7	49.2	1,877.0	0.075	28.8	0.260	79
07/29/14 00:32	0.068	5.9	19.2	50.5	1,877.0	0.073	29.4	0.267	82
07/29/14 00:33	0.068	5.8	19.3	51.5	1,877.0	0.075	28.9	0.277	81
07/29/14 00:34	0.067	5.9	19.4	50.8	1,877.0	0.074	28.6	0.268	79
07/29/14 00:35	0.071	5.9	19.2	51.4	1,877.0	0.073	30.4	0.271	78
07/29/14 00:36	0.068	5.9	19.1	52.1	1,877.0	0.073	29.5	0.275	80
07/29/14 00:37	0.068	5.9	18.9	52.8	1,877.0	0.072	29.6	0.279	84
07/29/14 00:38	0.067	5.9	19.8	52.1	1,877.0	0.075	29.0	0.275	84
07/29/14 00:39	0.067	6.0	19.1	52.4	1,877.0	0.071	29.5	0.272	78
07/29/14 00:40	0.069	5.9	19.4	52.8	1,877.0	0.074	29.9	0.279	77
07/29/14 00:41	0.072	5.9	19.7	54.9	1,877.0	0.075	30.9	0.290	84
07/29/14 00:42	0.070	5.9	19.7	51.3	1,877.0	0.075	30.4	0.271	84
07/29/14 00:43	0.070	5.9	19.8	52.5	1,877.0	0.075	30.4	0.277	80
07/29/14 00:44	0.070	5.9	19.5	52.3	1,877.0	0.074	30.4	0.276	77
07/29/14 00:45	0.070	6.0	19.3	48.7	1,877.0	0.072	30.4	0.253	84
Average	0.068	5.9	19.5	50.4	1,877.0	0.074	29.3	0.266	81
Minimum	0.063	5.8	18.9	45.7	1,877.0	0.071	27.4	0.241	76
Maximum	0.072	6.0	20.1	54.9	1,877.0	0.077	30.9	0.290	84
Summation	1.425	123.9	409.7	1,058.6	39,417.0	1.557	614.9	5.591	1,692
Included Data Points	21	21	21	21	21	21	21	21	21
Total number of Data Points	21	21	21	21	21	21	21	21	21

1

MPU00265

F = Unit Offline E = Exceedance C = Calibration S = Substituted I = Invalid
M = Maintenance T = Out Of Control * = Suspect U = Startup D = Shutdown

LOW FLOW RUN 1 S20

Average Data

Plant: Manitowoc Public Utilities
Interval: 1 Minute
Type: Roll
Report Period: 07/29/2014 00:25 Through 07/29/2014 00:30
Time Online Criteria: 1 minute(s)

Source		S20					
Parameter)Unit(		S20CPFLO (SCFH)	S20FFACT (MMBTU/CF)	S20PFLOW (KSCFM)	S20PVAC (PSIA)	S20STEAM (KLBS/HR)	S20STEMP (DEGFAHRE)
07/29/14	00:25	3,504,888.0	1,877.0	58.4	4.510	83	202.1
07/29/14	00:26	3,510,366.0	1,877.0	58.5	4.510	77	202.2
07/29/14	00:27	3,634,443.0	1,877.0	60.6	4.510	78	202.4
07/29/14	00:28	3,630,661.0	1,877.0	60.5	4.509	84	202.5
07/29/14	00:29	3,515,088.0	1,877.0	58.6	4.509	83	202.5
07/29/14	00:30	3,552,410.0	1,877.0	59.2	4.509	76	202.7
	Average	3,557,976.0	1,877.0	59.3	4.510	80	202.4
	Minimum	3,504,888.0	1,877.0	58.4	4.509	76	202.1
	Maximum	3,634,443.0	1,877.0	60.6	4.510	84	202.7
	Summation	21,347,856.0	11,262.0	355.8	27.057	481	1,214.4
	Included Data Points	6	6	6	6	6	6
	Total number of Data Points	6	6	6	6	6	6

F = Unit Offline **E = Exceedance** **C = Calibration** **S = Substituted** **U - Startup**
I = Invalid **M = Maintenance** **T = Out Of Control** *** = Suspect** **D - Shutdown**

S20 GAS RUN 2

Average Data

Plant: Manitowoc Public Utilities
Interval: 1 Minute
Type: Roll
Report Period: 07/29/2014 00:55 Through 07/29/2014 01:15
Time Online Criteria: 1 minute(s)

Source	S20								
Parameter)Unit(	S20CO#M (#/MMBTU)	S20CPCO2 (PERCENT)	S20CPNOX (PPM)	S20CPSO2 (PPM)	S20FFACT (MMBTU/CF)	S20NOX#M (LB/MMBTU)	S20PCO (PPM)	S20SO2#M (LB/MMBTU)	S20STEAM (KLBS/HR)
07/29/14 00:55	0.079	5.9	19.6	64.7	1,877.0	0.074	34.0	0.342	84
07/29/14 00:56	0.079	6.0	19.2	66.8	1,877.0	0.072	34.6	0.347	80
07/29/14 00:57	0.081	6.0	19.3	66.8	1,877.0	0.072	35.8	0.347	80
07/29/14 00:58	0.079	6.0	18.5	68.2	1,877.0	0.069	35.2	0.354	87
07/29/14 00:59	0.078	6.1	18.4	60.6	1,877.0	0.068	34.9	0.310	77
07/29/14 01:00	0.079	6.0	19.8	56.7	1,877.0	0.074	34.9	0.294	83
07/29/14 01:01	0.077	6.1	20.0	54.2	1,877.0	0.073	34.6	0.277	85
07/29/14 01:02	0.072	6.1	19.8	52.0	1,877.0	0.073	32.2	0.266	75
07/29/14 01:03	0.073	6.0	20.1	49.5	1,877.0	0.075	32.1	0.257	79
07/29/14 01:04	0.071	6.0	20.4	50.2	1,877.0	0.076	31.3	0.261	84
07/29/14 01:05	0.069	5.9	20.2	49.3	1,877.0	0.077	29.9	0.260	80
07/29/14 01:06	0.069	5.9	20.1	49.9	1,877.0	0.076	29.6	0.264	77
07/29/14 01:07	0.067	5.9	19.6	48.4	1,877.0	0.074	29.0	0.256	79
07/29/14 01:08	0.065	5.9	19.4	50.6	1,877.0	0.074	28.3	0.267	82
07/29/14 01:09	0.063	6.0	19.7	51.9	1,877.0	0.074	27.6	0.270	82
07/29/14 01:10	0.063	6.0	19.4	53.2	1,877.0	0.072	27.5	0.276	77
07/29/14 01:11	0.062	6.0	20.1	55.6	1,877.0	0.075	26.9	0.289	75
07/29/14 01:12	0.064	6.0	20.1	54.2	1,877.0	0.075	27.9	0.281	85
07/29/14 01:13	0.065	6.0	19.4	54.6	1,877.0	0.072	28.4	0.284	82
07/29/14 01:14	0.066	5.9	19.6	55.0	1,877.0	0.074	28.8	0.290	76
07/29/14 01:15	0.066	6.0	19.3	54.2	1,877.0	0.072	29.0	0.281	85
Average	0.071	6.0	19.6	55.6	1,877.0	0.073	31.1	0.289	81
Minimum	0.062	5.9	18.4	48.4	1,877.0	0.068	26.9	0.256	75
Maximum	0.081	6.1	20.4	68.2	1,877.0	0.077	35.8	0.354	87
Summation	1.487	125.7	412.0	1,166.6	39,417.0	1.541	652.5	6.073	1,694
Included Data Points	21	21	21	21	21	21	21	21	21
Total number of Data Points	21	21	21	21	21	21	21	21	21

3

F = Unit Offline E = Exceedance C = Calibration S = Substituted I = Invalid
M = Maintenance T = Out Of Control * = Suspect U = Startup D = Shutdown

MPU00267

LOW FLOW RUN 2 S20

Average Data

Plant: Manitowoc Public Utilities
Interval: 1 Minute
Type: Roll
Report Period: 07/29/2014 00:55 Through 07/29/2014 01:00
Time Online Criteria: 1 minute(s)

Source		S20					
Parameter)Unit(		S20CPFLO (SCFH)	S20FFACT (MMBTU/CF)	S20PFLOW (KSCFM)	S20PVAC (PSIA)	S20STEAM (KLBS/HR)	S20STEMP (DEGFAHRE)
07/29/14	00:55	3,528,697.0	1,877.0	58.8	4.506	84	201.7
07/29/14	00:56	3,550,036.0	1,877.0	59.2	4.506	80	201.6
07/29/14	00:57	3,558,100.0	1,877.0	59.3	4.506	80	201.6
07/29/14	00:58	3,588,720.0	1,877.0	59.8	4.505	87	202.0
07/29/14	00:59	3,642,690.0	1,877.0	60.7	4.504	77	202.0
07/29/14	01:00	3,580,616.0	1,877.0	59.7	4.504	83	201.9
	Average	3,574,809.8	1,877.0	59.6	4.505	82	201.8
	Minimum	3,528,697.0	1,877.0	58.8	4.504	77	201.6
	Maximum	3,642,690.0	1,877.0	60.7	4.506	87	202.0
	Summation	21,448,859.0	11,262.0	357.5	27.031	491	1,210.8
	Included Data Points	6	6	6	6	6	6
	Total number of Data Points	6	6	6	6	6	6

F = Unit Offline **E = Exceedance** **C = Calibration** **S = Substituted** **U - Startup**
I = Invalid **M = Maintenance** **T = Out Of Control** *** = Suspect** **D - Shutdown**

S20 GAS RUN 3

Average Data

Plant: Manitowoc Public Utilities
Interval: 1 Minute
Type: Roll
Report Period: 07/29/2014 01:25 Through 07/29/2014 01:45
Time Online Criteria: 1 minute(s)

Source	S20								
Parameter)Unit(	S20CO#M (#/MMBTU)	S20CPCO2 (PERCENT)	S20CPNOX (PPM)	S20CPSO2 (PPM)	S20FFACT (MMBTU/CF)	S20NOX#M (LB/MMBTU)	S20PCO (PPM)	S20SO2#M (LB/MMBTU)	S20STEAM (KLBS/HR)
07/29/14 01:25	0.062	6.1	19.6	43.9	1,877.0	0.072	27.9	0.224	88
07/29/14 01:26	0.063	6.1	19.5	41.9	1,877.0	0.072	27.9	0.214	83
07/29/14 01:27	0.063	6.0	19.6	42.3	1,877.0	0.073	27.8	0.220	75
07/29/14 01:28	0.065	6.0	20.1	42.5	1,877.0	0.075	28.5	0.221	84
07/29/14 01:29	0.064	5.9	20.6	41.9	1,877.0	0.078	28.0	0.221	84
07/29/14 01:30	0.065	5.9	20.4	42.4	1,877.0	0.077	28.3	0.224	77
07/29/14 01:31	0.065	5.9	19.8	43.3	1,877.0	0.075	28.0	0.229	82
07/29/14 01:32	0.063	6.0	19.6	40.4	1,877.0	0.073	27.6	0.210	85
07/29/14 01:33	0.063	6.0	19.5	40.2	1,877.0	0.073	27.7	0.209	85
07/29/14 01:34	0.062	6.0	19.4	39.7	1,877.0	0.072	27.2	0.206	78
07/29/14 01:35	0.066	5.9	20.0	38.9	1,877.0	0.076	28.6	0.205	79
07/29/14 01:36	0.066	5.9	19.6	38.4	1,877.0	0.074	28.6	0.203	86
07/29/14 01:37	0.067	5.9	19.9	40.8	1,877.0	0.076	28.8	0.215	83
07/29/14 01:38	0.066	5.8	19.6	39.8	1,877.0	0.076	28.3	0.214	76
07/29/14 01:39	0.066	5.9	19.4	40.5	1,877.0	0.074	28.4	0.214	84
07/29/14 01:40	0.065	5.9	18.9	41.0	1,877.0	0.072	27.8	0.217	84
07/29/14 01:41	0.067	5.9	18.8	43.2	1,877.0	0.071	28.9	0.228	82
07/29/14 01:42	0.067	5.9	18.7	42.0	1,877.0	0.071	28.9	0.222	76
07/29/14 01:43	0.065	5.9	18.8	42.5	1,877.0	0.071	28.0	0.224	83
07/29/14 01:44	0.062	5.9	18.9	44.1	1,877.0	0.072	26.9	0.233	84
07/29/14 01:45	0.065	5.9	18.7	45.4	1,877.0	0.071	27.9	0.240	78
Average	0.065	5.9	19.5	41.7	1,877.0	0.074	28.1	0.219	82
Minimum	0.062	5.8	18.7	38.4	1,877.0	0.071	26.9	0.203	75
Maximum	0.067	6.1	20.6	45.4	1,877.0	0.078	28.9	0.240	88
Summation	1.357	124.7	409.4	875.1	39,417.0	1.544	590.0	4.593	1,716
Included Data Points	21	21	21	21	21	21	21	21	21
Total number of Data Points	21	21	21	21	21	21	21	21	21

5

MPU00269

F = Unit Offline E = Exceedance C = Calibration S = Substituted I = Invalid
M = Maintenance T = Out Of Control * = Suspect U = Startup D = Shutdown

LOW FLOW RUN 3 S20

Average Data

Plant: Manitowoc Public Utilities
Interval: 1 Minute
Type: Roll
Report Period: 07/29/2014 01:25 Through 07/29/2014 01:30
Time Online Criteria: 1 minute(s)

Source		S20					
Parameter)Unit(		S20CPFLO (SCFH)	S20FFACT (MMBTU/CF)	S20PFLOW (KSCFM)	S20PVAC (PSIA)	S20STEAM (KLBS/HR)	S20STEMP (DEGFAHRE)
07/29/14	01:25	3,274,857.0	1,877.0	54.6	4.509	88	202.1
07/29/14	01:26	3,481,167.0	1,877.0	58.0	4.508	83	202.4
07/29/14	01:27	3,551,367.0	1,877.0	59.2	4.508	75	202.5
07/29/14	01:28	3,536,518.0	1,877.0	58.9	4.507	84	202.8
07/29/14	01:29	3,356,045.0	1,877.0	55.9	4.506	84	202.6
07/29/14	01:30	3,709,956.0	1,877.0	61.8	4.506	77	203.7
	Average	3,484,985.0	1,877.0	58.1	4.507	82	202.7
	Minimum	3,274,857.0	1,877.0	54.6	4.506	75	202.1
	Maximum	3,709,956.0	1,877.0	61.8	4.509	88	203.7
	Summation	20,909,910.0	11,262.0	348.4	27.044	491	1,216.1
	Included Data Points	6	6	6	6	6	6
	Total number of Data Points	6	6	6	6	6	6

F = Unit Offline **E = Exceedance** **C = Calibration** **S = Substituted** **U - Startup**
I = Invalid **M = Maintenance** **T = Out Of Control** *** = Suspect** **D - Shutdown**

S20 GAS RUN 4

Average Data

Plant: Manitowoc Public Utilities
Interval: 1 Minute
Type: Roll
Report Period: 07/29/2014 01:55 Through 07/29/2014 02:15
Time Online Criteria: 1 minute(s)

Source	S20								
Parameter)Unit(	S20CO#M (#/MMBTU)	S20CPCO2 (PERCENT)	S20CPNOX (PPM)	S20CPSO2 (PPM)	S20FFACT (MMBTU/CF)	S20NOX#M (LB/MMBTU)	S20PCO (PPM)	S20SO2#M (LB/MMBTU)	S20STEAM (KLBS/HR)
07/29/14 01:55	0.064	5.8	18.8	52.7	1,877.0	0.073	27.2	0.283	86
07/29/14 01:56	0.060	5.9	19.1	51.0	1,877.0	0.073	25.8	0.269	78
07/29/14 01:57	0.059	5.9	18.8	51.9	1,877.0	0.071	25.4	0.274	77
07/29/14 01:58	0.059	5.9	18.9	53.2	1,877.0	0.072	25.5	0.281	84
07/29/14 01:59	0.060	5.9	18.8	51.8	1,877.0	0.071	26.0	0.274	83
07/29/14 02:00	0.062	5.9	19.2	53.1	1,877.0	0.073	27.1	0.280	77
07/29/14 02:01	0.063	5.9	19.5	54.2	1,877.0	0.074	27.3	0.286	77
07/29/14 02:02	0.066	5.9	19.0	56.4	1,877.0	0.072	28.6	0.298	83
07/29/14 02:03	0.069	5.9	19.5	57.3	1,877.0	0.074	29.8	0.303	84
07/29/14 02:04	0.068	5.9	18.9	53.7	1,877.0	0.072	29.6	0.284	84
07/29/14 02:05	0.069	6.0	18.5	51.9	1,877.0	0.069	30.1	0.270	81
07/29/14 02:06	0.068	6.0	18.9	52.6	1,877.0	0.071	29.7	0.273	79
07/29/14 02:07	0.072	6.0	18.7	48.9	1,877.0	0.070	31.3	0.254	79
07/29/14 02:08	0.070	5.9	19.6	48.9	1,877.0	0.074	30.1	0.258	79
07/29/14 02:09	0.072	5.9	19.4	48.9	1,877.0	0.074	31.2	0.258	79
07/29/14 02:10	0.071	5.9	19.2	51.4	1,877.0	0.073	30.9	0.271	79
07/29/14 02:11	0.070	5.9	19.3	53.3	1,877.0	0.073	30.1	0.281	83
07/29/14 02:12	0.068	6.0	19.3	52.3	1,877.0	0.072	29.7	0.272	82
07/29/14 02:13	0.068	6.0	19.2	52.2	1,877.0	0.072	30.1	0.271	81
07/29/14 02:14	0.068	6.0	18.5	50.8	1,877.0	0.069	29.6	0.264	76
07/29/14 02:15	0.068	5.9	18.6	51.6	1,877.0	0.071	29.3	0.273	79
Average	0.066	5.9	19.0	52.3	1,877.0	0.072	28.8	0.275	80
Minimum	0.059	5.8	18.5	48.9	1,877.0	0.069	25.4	0.254	76
Maximum	0.072	6.0	19.6	57.3	1,877.0	0.074	31.3	0.303	86
Summation	1.394	124.4	399.7	1,098.1	39,417.0	1.513	604.4	5.777	1,690
Included Data Points	21	21	21	21	21	21	21	21	21
Total number of Data Points	21	21	21	21	21	21	21	21	21

7

MPU00271

F = Unit Offline E = Exceedance C = Calibration S = Substituted I = Invalid
M = Maintenance T = Out Of Control * = Suspect U = Startup D = Shutdown

LOW FLOW RUN 4 S20

Average Data

Plant: Manitowoc Public Utilities
Interval: 1 Minute
Type: Roll
Report Period: 07/29/2014 01:55 Through 07/29/2014 02:00
Time Online Criteria: 1 minute(s)

Source		S20					
Parameter)Unit(		S20CPFLO (SCFH)	S20FFACT (MMBTU/CF)	S20PFLOW (KSCFM)	S20PVAC (PSIA)	S20STEAM (KLBS/HR)	S20STEMP (DEGFAHRE)
07/29/14	01:55	3,460,856.0	1,877.0	57.7	4.503	86	203.1
07/29/14	01:56	3,390,375.0	1,877.0	56.5	4.503	78	203.0
07/29/14	01:57	3,376,262.0	1,877.0	56.3	4.503	77	203.2
07/29/14	01:58	3,690,923.0	1,877.0	61.5	4.502	84	202.8
07/29/14	01:59	3,412,912.0	1,877.0	56.9	4.502	83	202.9
07/29/14	02:00	3,484,963.0	1,877.0	58.1	4.502	77	203.4
	Average	3,469,381.8	1,877.0	57.8	4.503	81	203.1
	Minimum	3,376,262.0	1,877.0	56.3	4.502	77	202.8
	Maximum	3,690,923.0	1,877.0	61.5	4.503	86	203.4
	Summation	20,816,291.0	11,262.0	347.0	27.015	485	1,218.4
	Included Data Points	6	6	6	6	6	6
	Total number of Data Points	6	6	6	6	6	6

F = Unit Offline **E = Exceedance** **C = Calibration** **S = Substituted** **U - Startup**
I = Invalid **M = Maintenance** **T = Out Of Control** *** = Suspect** **D - Shutdown**

S20 GAS RUNS

Average Data

Plant: Manitowoc Public Utilities
Interval: 1 Minute
Type: Roll
Report Period: 07/29/2014 02:25 Through 07/29/2014 02:45
Time Online Criteria: 1 minute(s)

Source	S20								
Parameter)Unit(	S20CO#M (#/MMBTU)	S20CPCO2 (PERCENT)	S20CPNOX (PPM)	S20CPSO2 (PPM)	S20FFACT (MMBTU/CF)	S20NOX#M (LB/MMBTU)	S20PCO (PPM)	S20SO2#M (LB/MMBTU)	S20STEAM (KLBS/HR)
07/29/14 02:25	0.066	6.0	18.2	53.3	1,877.0	0.068	29.1	0.277	83
07/29/14 02:26	0.068	6.0	17.9	53.5	1,877.0	0.067	29.8	0.278	78
07/29/14 02:27	0.066	6.0	18.0	55.5	1,877.0	0.067	29.1	0.288	77
07/29/14 02:28	0.064	6.0	18.2	54.5	1,877.0	0.068	28.1	0.283	85
07/29/14 02:29	0.064	6.0	17.9	55.5	1,877.0	0.067	28.5	0.288	81
07/29/14 02:30	0.064	6.0	18.0	54.6	1,877.0	0.067	28.0	0.284	74
07/29/14 02:31	0.065	6.0	17.9	55.5	1,877.0	0.067	28.3	0.288	83
07/29/14 02:32	0.065	6.0	18.2	57.2	1,877.0	0.068	28.4	0.297	84
07/29/14 02:33	0.066	6.0	18.3	56.0	1,877.0	0.068	29.2	0.291	75
07/29/14 02:34	0.066	6.0	17.6	55.5	1,877.0	0.066	29.1	0.288	79
07/29/14 02:35	0.064	6.0	18.1	55.6	1,877.0	0.068	28.0	0.289	85
07/29/14 02:36	0.064	6.0	17.8	53.5	1,877.0	0.066	28.3	0.278	80
07/29/14 02:37	0.063	6.1	17.7	53.5	1,877.0	0.065	28.1	0.273	74
07/29/14 02:38	0.066	6.0	18.3	50.3	1,877.0	0.068	29.1	0.261	84
07/29/14 02:39	0.065	6.0	18.2	48.5	1,877.0	0.068	28.4	0.252	84
07/29/14 02:40	0.064	6.0	18.9	51.2	1,877.0	0.071	28.2	0.266	78
07/29/14 02:41	0.064	6.1	18.6	51.1	1,877.0	0.068	28.6	0.261	76
07/29/14 02:42	0.066	6.0	18.8	50.9	1,877.0	0.070	29.0	0.264	83
07/29/14 02:43	0.065	6.0	18.7	52.2	1,877.0	0.070	28.7	0.271	85
07/29/14 02:44	0.062	6.1	17.9	52.2	1,877.0	0.066	27.9	0.267	77
07/29/14 02:45	0.062	6.0	18.5	48.9	1,877.0	0.069	27.4	0.254	77
Average	0.065	6.0	18.2	53.3	1,877.0	0.068	28.5	0.276	80
Minimum	0.062	6.0	17.6	48.5	1,877.0	0.065	27.4	0.252	74
Maximum	0.068	6.1	18.9	57.2	1,877.0	0.071	29.8	0.297	85
Summation	1.359	126.3	381.7	1,119.0	39,417.0	1.422	599.3	5.798	1,682
Included Data Points	21	21	21	21	21	21	21	21	21
Total number of Data Points	21	21	21	21	21	21	21	21	21

9

F = Unit Offline E = Exceedance C = Calibration S = Substituted I = Invalid
M = Maintenance T = Out Of Control * = Suspect U = Startup D = Shutdown

MPU00273

LOW FLOW RUN 5 S20

Average Data

Plant: Manitowoc Public Utilities
Interval: 1 Minute
Type: Roll
Report Period: 07/29/2014 02:25 Through 07/29/2014 02:30
Time Online Criteria: 1 minute(s)

Source	S20					
Parameter)Unit(	S20CPFLO (SCFH)	S20FFACT (MMBTU/CF)	S20PFLOW (KSCFM)	S20PVAC (PSIA)	S20STEAM (KLBS/HR)	S20STEMP (DEGFAHRE)
07/29/14 02:25	3,361,221.0	1,877.0	56.0	4.509	83	202.1
07/29/14 02:26	3,334,192.0	1,877.0	55.6	4.508	78	201.5
07/29/14 02:27	3,534,750.0	1,877.0	58.9	4.508	77	201.5
07/29/14 02:28	3,442,881.0	1,877.0	57.4	4.507	85	201.6
07/29/14 02:29	3,326,916.0	1,877.0	55.4	4.506	81	201.8
07/29/14 02:30	3,289,131.0	1,877.0	54.8	4.506	74	201.7
Average	3,381,515.2	1,877.0	56.4	4.507	80	201.7
Minimum	3,289,131.0	1,877.0	54.8	4.506	74	201.5
Maximum	3,534,750.0	1,877.0	58.9	4.509	85	202.1
Summation	20,289,091.0	11,262.0	338.1	27.044	478	1,210.2
Included Data Points	6	6	6	6	6	6
Total number of Data Points	6	6	6	6	6	6

F = Unit Offline **E = Exceedance** C = Calibration **S = Substituted** **U - Startup**
I = Invalid **M = Maintenance** **T = Out Of Control** * = Suspect **D - Shutdown**

S20 GAS RUN 6

Average Data

Plant: Manitowoc Public Utilities
Interval: 1 Minute
Type: Roll
Report Period: 07/29/2014 02:55 Through 07/29/2014 03:15
Time Online Criteria: 1 minute(s)

Source	S20								
Parameter)Unit(	S20CO#M (#/MMBTU)	S20CPCO2 (PERCENT)	S20CPNOX (PPM)	S20CPSO2 (PPM)	S20FFACT (MMBTU/CF)	S20NOX#M (LB/MMBTU)	S20PCO (PPM)	S20SO2#M (LB/MMBTU)	S20STEAM (KLBS/HR)
07/29/14 02:55	0.067	6.0	18.4	46.8	1,877.0	0.069	29.3	0.243	74
07/29/14 02:56	0.067	5.9	18.6	47.7	1,877.0	0.071	28.8	0.252	80
07/29/14 02:57	0.068	5.9	18.4	50.1	1,877.0	0.070	29.3	0.265	84
07/29/14 02:58	0.066	6.0	18.6	52.7	1,877.0	0.069	29.1	0.274	79
07/29/14 02:59	0.067	6.0	18.4	52.1	1,877.0	0.069	29.3	0.271	78
07/29/14 03:00	0.065	6.1	17.8	51.4	1,877.0	0.065	29.2	0.263	83
07/29/14 03:01	0.066	6.1	17.8	48.4	1,877.0	0.065	29.4	0.247	83
07/29/14 03:02	0.068	6.0	18.5	48.3	1,877.0	0.069	29.7	0.251	74
07/29/14 03:03	0.066	6.0	18.2	49.3	1,877.0	0.068	29.2	0.256	79
07/29/14 03:04	0.068	6.0	18.2	48.8	1,877.0	0.068	29.8	0.253	83
07/29/14 03:05	0.069	6.0	18.3	50.6	1,877.0	0.068	30.4	0.263	82
07/29/14 03:06	0.066	6.1	17.8	48.0	1,877.0	0.065	29.4	0.245	78
07/29/14 03:07	0.067	6.0	18.1	49.7	1,877.0	0.068	29.7	0.258	77
07/29/14 03:08	0.066	6.0	17.7	48.9	1,877.0	0.066	29.1	0.254	82
07/29/14 03:09	0.066	6.1	18.0	48.9	1,877.0	0.066	29.2	0.250	82
07/29/14 03:10	0.068	6.0	18.7	53.3	1,877.0	0.070	29.8	0.277	80
07/29/14 03:11	0.068	6.0	18.2	53.5	1,877.0	0.068	29.7	0.278	79
07/29/14 03:12	0.064	6.1	18.6	55.2	1,877.0	0.068	28.6	0.282	81
07/29/14 03:13	0.065	6.1	18.2	49.9	1,877.0	0.067	29.1	0.255	86
07/29/14 03:14	0.063	6.1	18.0	47.9	1,877.0	0.066	28.5	0.245	82
07/29/14 03:15	0.064	6.1	18.8	45.2	1,877.0	0.069	28.3	0.231	74
Average	0.066	6.0	18.3	49.8	1,877.0	0.068	29.3	0.258	80
Minimum	0.063	5.9	17.7	45.2	1,877.0	0.065	28.3	0.231	74
Maximum	0.069	6.1	18.8	55.2	1,877.0	0.071	30.4	0.282	86
Summation	1.394	126.6	383.3	1,046.7	39,417.0	1.424	614.9	5.413	1,680
Included Data Points	21	21	21	21	21	21	21	21	21
Total number of Data Points	21	21	21	21	21	21	21	21	21

F = Unit Offline **E = Exceedance** **C = Calibration** **S = Substituted** **I = Invalid**
M = Maintenance **T = Out Of Control** *** = Suspect** **U = Startup** **D = Shutdown**

LOW FLOW RUN 6 S20

Average Data

Plant: Manitowoc Public Utilities
Interval: 1 Minute
Type: Roll
Report Period: 07/29/2014 02:55 Through 07/29/2014 03:00
Time Online Criteria: 1 minute(s)

Source		S20					
Parameter)Unit(		S20CPFLO (SCFH)	S20FFACT (MMBTU/CF)	S20PFLOW (KSCFM)	S20PVAC (PSIA)	S20STEAM (KLBS/HR)	S20STEMP (DEGFAHRE)
07/29/14	02:55	3,403,785.0	1,877.0	56.7	4.503	74	201.8
07/29/14	02:56	3,574,243.0	1,877.0	59.6	4.503	80	201.5
07/29/14	02:57	3,538,875.0	1,877.0	59.0	4.502	84	201.2
07/29/14	02:58	3,487,400.0	1,877.0	58.1	4.502	79	201.0
07/29/14	02:59	3,323,506.0	1,877.0	55.4	4.502	78	202.0
07/29/14	03:00	3,508,323.0	1,877.0	58.5	4.501	83	201.9
	Average	3,472,688.7	1,877.0	57.9	4.502	80	201.6
	Minimum	3,323,506.0	1,877.0	55.4	4.501	74	201.0
	Maximum	3,574,243.0	1,877.0	59.6	4.503	84	202.0
	Summation	20,836,132.0	11,262.0	347.3	27.013	478	1,209.4
	Included Data Points	6	6	6	6	6	6
	Total number of Data Points	6	6	6	6	6	6

F = Unit Offline **E = Exceedance** **C = Calibration** **S = Substituted** **U - Startup**
I = Invalid **M = Maintenance** **T = Out Of Control** *** = Suspect** **D - Shutdown**

S20 GAS RUN 7

Average Data

Plant: Manitowoc Public Utilities
Interval: 1 Minute
Type: Roll
Report Period: 07/29/2014 03:25 Through 07/29/2014 03:45
Time Online Criteria: 1 minute(s)

Source	S20								
Parameter)Unit(	S20CO#M (#/MMBTU)	S20CPCO2 (PERCENT)	S20CPNOX (PPM)	S20CPSO2 (PPM)	S20FFACT (MMBTU/CF)	S20NOX#M (LB/MMBTU)	S20PCO (PPM)	S20SO2#M (LB/MMBTU)	S20STEAM (KLBS/HR)
07/29/14 03:25	0.062	6.0	20.9	27.8	1,877.0	0.078	26.9	0.144	81
07/29/14 03:26	0.064	5.9	21.1	28.9	1,877.0	0.080	27.8	0.153	80
07/29/14 03:27	0.064	5.9	20.4	28.2	1,877.0	0.077	27.4	0.149	82
07/29/14 03:28	0.065	5.8	21.5	29.5	1,877.0	0.083	27.3	0.158	84
07/29/14 03:29	0.064	5.8	20.7	28.4	1,877.0	0.080	27.2	0.153	84
07/29/14 03:30	0.064	5.8	20.8	28.6	1,877.0	0.080	27.2	0.154	85
07/29/14 03:31	0.061	6.0	19.8	29.3	1,877.0	0.074	26.8	0.152	81
07/29/14 03:32	0.059	6.0	19.6	31.6	1,877.0	0.073	25.5	0.164	79
07/29/14 03:33	0.057	6.0	19.2	31.5	1,877.0	0.072	24.8	0.164	77
07/29/14 03:34	0.064	5.6	21.6	31.8	1,877.0	0.086	26.3	0.177	78
07/29/14 03:35	0.070	5.6	20.8	33.5	1,877.0	0.083	28.6	0.186	84
07/29/14 03:36	0.065	5.7	20.2	36.5	1,877.0	0.079	27.2	0.200	81
07/29/14 03:37	0.064	5.7	20.2	36.4	1,877.0	0.079	26.5	0.199	75
07/29/14 03:38	0.059	5.7	19.6	35.3	1,877.0	0.077	24.5	0.193	83
07/29/14 03:39	0.058	5.8	20.1	37.2	1,877.0	0.078	24.5	0.200	84
07/29/14 03:40	0.058	5.8	19.7	36.8	1,877.0	0.076	24.5	0.198	78
07/29/14 03:41	0.058	5.8	19.5	39.3	1,877.0	0.075	24.6	0.211	79
07/29/14 03:42	0.059	5.8	19.8	37.8	1,877.0	0.077	25.1	0.203	83
07/29/14 03:43	0.061	5.8	19.3	40.5	1,877.0	0.075	26.1	0.218	83
07/29/14 03:44	0.061	5.9	18.7	41.2	1,877.0	0.071	26.1	0.218	81
07/29/14 03:45	0.062	5.8	18.4	40.7	1,877.0	0.071	26.6	0.219	76
Average	0.062	5.8	20.1	33.8	1,877.0	0.077	26.3	0.182	81
Minimum	0.057	5.6	18.4	27.8	1,877.0	0.071	24.5	0.144	75
Maximum	0.070	6.0	21.6	41.2	1,877.0	0.086	28.6	0.219	85
Summation	1.299	122.2	421.9	710.8	39,417.0	1.624	551.5	3.813	1,698
Included Data Points	21	21	21	21	21	21	21	21	21
Total number of Data Points	21	21	21	21	21	21	21	21	21

13

MPU00277

F = Unit Offline **E = Exceedance** C = Calibration **S = Substituted** I = Invalid
M = Maintenance **T = Out Of Control** * = Suspect **U = Startup** **D = Shutdown**

LOW FLOW RUN 7 S20

Average Data

Plant: Manitowoc Public Utilities
Interval: 1 Minute
Type: Roll
Report Period: 07/29/2014 03:25 Through 07/29/2014 03:30
Time Online Criteria: 1 minute(s)

Source		S20					
Parameter)Unit(		S20CPFLO (SCFH)	S20FFACT (MMBTU/CF)	S20PFLOW (KSCFM)	S20PVAC (PSIA)	S20STEAM (KLBS/HR)	S20STEMP (DEGFAHRE)
07/29/14	03:25	3,670,927.0	1,877.0	61.2	4.507	81	203.0
07/29/14	03:26	3,403,581.0	1,877.0	56.7	4.508	80	202.5
07/29/14	03:27	3,675,372.0	1,877.0	61.3	4.508	82	203.4
07/29/14	03:28	3,418,754.0	1,877.0	57.0	4.509	84	203.1
07/29/14	03:29	3,448,363.0	1,877.0	57.5	4.508	84	202.8
07/29/14	03:30	3,457,032.0	1,877.0	57.6	4.507	85	202.8
	Average	3,512,338.2	1,877.0	58.6	4.508	83	202.9
	Minimum	3,403,581.0	1,877.0	56.7	4.507	80	202.5
	Maximum	3,675,372.0	1,877.0	61.3	4.509	85	203.4
	Summation	21,074,029.0	11,262.0	351.3	27.047	496	1,217.6
	Included Data Points	6	6	6	6	6	6
	Total number of Data Points	6	6	6	6	6	6

F = Unit Offline **E = Exceedance** **C = Calibration** **S = Substituted** **U - Startup**
I = Invalid **M = Maintenance** **T = Out Of Control** *** = Suspect** **D - Shutdown**

S20 GAS RUN 8

Average Data

Plant: Manitowoc Public Utilities
Interval: 1 Minute
Type: Roll
Report Period: 07/29/2014 03:55 Through 07/29/2014 04:15
Time Online Criteria: 1 minute(s)

Source	S20								
Parameter)Unit(	S20CO#M (#/MMBTU)	S20CPCO2 (PERCENT)	S20CPNOX (PPM)	S20CPSO2 (PPM)	S20FFACT (MMBTU/CF)	S20NOX#M (LB/MMBTU)	S20PCO (PPM)	S20SO2#M (LB/MMBTU)	S20STEAM (KLBS/HR)
07/29/14 03:55	0.063	5.9	18.2	49.2	1,877.0	0.069	27.2	0.260	80
07/29/14 03:56	0.066	5.9	18.3	46.8	1,877.0	0.070	28.5	0.247	80
07/29/14 03:57	0.066	5.8	18.3	48.2	1,877.0	0.071	28.2	0.259	80
07/29/14 03:58	0.066	5.8	17.8	47.0	1,877.0	0.069	28.3	0.252	82
07/29/14 03:59	0.063	5.8	18.1	48.8	1,877.0	0.070	27.0	0.262	84
07/29/14 04:00	0.061	5.9	18.2	50.7	1,877.0	0.069	26.2	0.268	79
07/29/14 04:01	0.060	5.9	17.8	48.5	1,877.0	0.068	26.2	0.256	78
07/29/14 04:02	0.059	5.9	18.2	49.4	1,877.0	0.069	25.4	0.261	86
07/29/14 04:03	0.059	5.9	18.1	48.1	1,877.0	0.069	25.4	0.254	83
07/29/14 04:04	0.061	5.9	18.0	49.4	1,877.0	0.068	26.6	0.261	75
07/29/14 04:05	0.061	5.9	18.0	50.5	1,877.0	0.068	26.1	0.267	82
07/29/14 04:06	0.064	5.9	18.0	50.2	1,877.0	0.068	27.5	0.265	85
07/29/14 04:07	0.062	5.9	18.2	53.4	1,877.0	0.069	26.9	0.282	77
07/29/14 04:08	0.062	5.9	18.0	53.6	1,877.0	0.068	26.7	0.283	80
07/29/14 04:09	0.063	6.0	17.5	51.6	1,877.0	0.065	27.6	0.268	83
07/29/14 04:10	0.065	5.9	18.4	53.1	1,877.0	0.070	28.1	0.280	77
07/29/14 04:11	0.064	5.9	18.0	53.4	1,877.0	0.068	27.7	0.282	75
07/29/14 04:12	0.067	5.9	18.6	54.5	1,877.0	0.071	28.8	0.288	83
07/29/14 04:13	0.066	5.9	18.2	56.4	1,877.0	0.069	28.6	0.298	83
07/29/14 04:14	0.065	5.9	17.8	54.7	1,877.0	0.068	27.9	0.289	80
07/29/14 04:15	0.062	5.8	18.5	55.0	1,877.0	0.071	26.4	0.295	74
Average	0.063	5.9	18.1	51.1	1,877.0	0.069	27.2	0.270	80
Minimum	0.059	5.8	17.5	46.8	1,877.0	0.065	25.4	0.247	74
Maximum	0.067	6.0	18.6	56.4	1,877.0	0.071	28.8	0.298	86
Summation	1.325	123.6	380.2	1,072.5	39,417.0	1.447	571.3	5.677	1,686
Included Data Points	21	21	21	21	21	21	21	21	21
Total number of Data Points	21	21	21	21	21	21	21	21	21

F = Unit Offline **E = Exceedance** C = Calibration **S = Substituted** I = Invalid
M = Maintenance **T = Out Of Control** * = Suspect **U = Startup** **D = Shutdown**

LOW FLOW RUN 8 S20

Average Data

Plant: Manitowoc Public Utilities
Interval: 1 Minute
Type: Roll
Report Period: 07/29/2014 03:55 Through 07/29/2014 04:00
Time Online Criteria: 1 minute(s)

Source		S20					
Parameter)Unit(		S20CPFLO (SCFH)	S20FFACT (MMBTU/CF)	S20PFLOW (KSCFM)	S20PVAC (PSIA)	S20STEAM (KLBS/HR)	S20STEMP (DEGFAHRE)
07/29/14	03:55	3,608,310.0	1,877.0	60.1	4.505	80	202.1
07/29/14	03:56	3,549,027.0	1,877.0	59.2	4.505	80	202.0
07/29/14	03:57	3,319,485.0	1,877.0	55.3	4.504	80	201.7
07/29/14	03:58	3,492,378.0	1,877.0	58.2	4.504	82	201.9
07/29/14	03:59	3,410,545.0	1,877.0	56.8	4.503	84	201.7
07/29/14	04:00	3,389,703.0	1,877.0	56.5	4.503	79	201.8
	Average	3,461,574.7	1,877.0	57.7	4.504	81	201.9
	Minimum	3,319,485.0	1,877.0	55.3	4.503	79	201.7
	Maximum	3,608,310.0	1,877.0	60.1	4.505	84	202.1
	Summation	20,769,448.0	11,262.0	346.1	27.024	485	1,211.2
	Included Data Points	6	6	6	6	6	6
	Total number of Data Points	6	6	6	6	6	6

F = Unit Offline **E = Exceedance** **C = Calibration** **S = Substituted** **U - Startup**
I = Invalid **M = Maintenance** **T = Out Of Control** *** = Suspect** **D - Shutdown**

S20 GAS RUN 9

Average Data

Plant: Manitowoc Public Utilities
Interval: 1 Minute
Type: Roll
Report Period: 07/29/2014 04:25 Through 07/29/2014 04:45
Time Online Criteria: 1 minute(s)

Source	S20								
Parameter)Unit(	S20CO#M (#/MMBTU)	S20CPCO2 (PERCENT)	S20CPNOX (PPM)	S20CPSO2 (PPM)	S20FFACT (MMBTU/CF)	S20NOX#M (LB/MMBTU)	S20PCO (PPM)	S20SO2#M (LB/MMBTU)	S20STEAM (KLBS/HR)
07/29/14 04:25	0.062	6.0	18.2	48.5	1,877.0	0.068	27.0	0.252	81
07/29/14 04:26	0.061	5.9	18.4	50.4	1,877.0	0.070	26.5	0.266	75
07/29/14 04:27	0.058	5.9	18.3	50.7	1,877.0	0.070	25.4	0.268	83
07/29/14 04:28	0.059	6.0	18.3	48.9	1,877.0	0.068	25.8	0.254	83
07/29/14 04:29	0.061	5.9	17.9	51.0	1,877.0	0.068	26.5	0.269	77
07/29/14 04:30	0.060	5.9	18.3	51.0	1,877.0	0.070	26.2	0.269	77
07/29/14 04:31	0.061	6.0	18.1	50.2	1,877.0	0.068	26.5	0.261	82
07/29/14 04:32	0.061	5.9	18.0	49.5	1,877.0	0.068	26.4	0.261	82
07/29/14 04:33	0.060	6.0	17.9	50.6	1,877.0	0.067	26.4	0.263	79
07/29/14 04:34	0.060	6.0	18.2	54.0	1,877.0	0.068	26.3	0.280	76
07/29/14 04:35	0.060	6.0	17.6	50.1	1,877.0	0.066	26.4	0.260	82
07/29/14 04:36	0.059	6.0	17.6	49.2	1,877.0	0.066	25.9	0.255	86
07/29/14 04:37	0.060	6.0	17.6	49.9	1,877.0	0.066	26.2	0.259	77
07/29/14 04:38	0.059	6.0	17.5	50.5	1,877.0	0.065	26.0	0.262	79
07/29/14 04:39	0.062	6.0	17.9	50.3	1,877.0	0.067	27.0	0.261	86
07/29/14 04:40	0.060	6.0	17.3	48.5	1,877.0	0.065	26.6	0.252	79
07/29/14 04:41	0.060	6.0	17.6	48.4	1,877.0	0.066	26.2	0.251	77
07/29/14 04:42	0.061	6.0	17.6	50.5	1,877.0	0.066	26.7	0.262	83
07/29/14 04:43	0.060	6.0	17.9	48.5	1,877.0	0.067	26.4	0.252	82
07/29/14 04:44	0.064	5.9	17.6	50.5	1,877.0	0.067	27.6	0.267	74
07/29/14 04:45	0.063	5.9	17.7	51.3	1,877.0	0.067	27.1	0.271	82
Average	0.061	6.0	17.9	50.1	1,877.0	0.067	26.4	0.262	80
Minimum	0.058	5.9	17.3	48.4	1,877.0	0.065	25.4	0.251	74
Maximum	0.064	6.0	18.4	54.0	1,877.0	0.070	27.6	0.280	86
Summation	1.271	125.3	375.5	1,052.5	39,417.0	1.413	555.1	5.495	1,682
Included Data Points	21	21	21	21	21	21	21	21	21
Total number of Data Points	21	21	21	21	21	21	21	21	21

17

MPU00281

F = Unit Offline E = Exceedance C = Calibration S = Substituted I = Invalid
M = Maintenance T = Out Of Control * = Suspect U = Startup D = Shutdown

LOW FLOW RUN 9 S20

Average Data

Plant: Manitowoc Public Utilities
Interval: 1 Minute
Type: Roll
Report Period: 07/29/2014 04:25 Through 07/29/2014 04:30
Time Online Criteria: 1 minute(s)

Source		S20					
Parameter)Unit(		S20CPFLO (SCFH)	S20FFACT (MMBTU/CF)	S20PFLOW (KSCFM)	S20PVAC (PSIA)	S20STEAM (KLBS/HR)	S20STEMP (DEGFAHRE)
07/29/14	04:25	3,394,622.0	1,877.0	56.6	4.505	81	200.3
07/29/14	04:26	3,375,216.0	1,877.0	56.3	4.507	75	200.2
07/29/14	04:27	3,442,390.0	1,877.0	57.4	4.507	83	200.1
07/29/14	04:28	3,542,901.0	1,877.0	59.0	4.507	83	200.4
07/29/14	04:29	3,517,298.0	1,877.0	58.6	4.507	77	200.5
07/29/14	04:30	3,457,949.0	1,877.0	57.6	4.507	77	200.4
	Average	3,455,062.7	1,877.0	57.6	4.507	79	200.3
	Minimum	3,375,216.0	1,877.0	56.3	4.505	75	200.1
	Maximum	3,542,901.0	1,877.0	59.0	4.507	83	200.5
	Summation	20,730,376.0	11,262.0	345.5	27.040	476	1,201.9
	Included Data Points	6	6	6	6	6	6
	Total number of Data Points	6	6	6	6	6	6

F = Unit Offline **E = Exceedance** C = Calibration **S = Substituted** **U - Startup**
I = Invalid **M = Maintenance** **T = Out Of Control** * = Suspect **D - Shutdown**

S20 GAS RUN 10

Average Data

Plant: Manitowoc Public Utilities
Interval: 1 Minute
Type: Roll
Report Period: 07/29/2014 04:55 Through 07/29/2014 05:15
Time Online Criteria: 1 minute(s)

Source	S20								
Parameter)Unit(	S20CO#M (#/MMBTU)	S20CPCO2 (PERCENT)	S20CPNOX (PPM)	S20CPSO2 (PPM)	S20FFACT (MMBTU/CF)	S20NOX#M (LB/MMBTU)	S20PCO (PPM)	S20SO2#M (LB/MMBTU)	S20STEAM (KLBS/HR)
07/29/14 04:55	0.062	6.0	17.9	51.3	1,877.0	0.067	27.2	0.266	79
07/29/14 04:56	0.062	6.1	18.0	51.8	1,877.0	0.066	27.7	0.265	84
07/29/14 04:57	0.063	6.0	17.8	52.3	1,877.0	0.066	27.7	0.272	80
07/29/14 04:58	0.064	6.0	18.0	47.6	1,877.0	0.067	28.1	0.247	77
07/29/14 04:59	0.064	6.0	18.2	45.8	1,877.0	0.068	28.3	0.238	85
07/29/14 05:00	0.063	6.0	17.8	46.5	1,877.0	0.066	28.1	0.241	82
07/29/14 05:01	0.065	6.0	17.8	44.6	1,877.0	0.066	28.6	0.232	73
07/29/14 05:02	0.066	5.9	18.8	46.4	1,877.0	0.071	28.5	0.245	77
07/29/14 05:03	0.066	6.0	18.4	49.0	1,877.0	0.069	28.7	0.254	85
07/29/14 05:04	0.066	6.0	18.7	50.4	1,877.0	0.070	28.8	0.262	83
07/29/14 05:05	0.064	6.0	18.4	47.6	1,877.0	0.069	28.3	0.247	75
07/29/14 05:06	0.066	6.0	18.4	46.2	1,877.0	0.069	29.1	0.240	79
07/29/14 05:07	0.066	6.0	18.6	45.8	1,877.0	0.069	29.0	0.238	85
07/29/14 05:08	0.067	5.9	18.5	47.0	1,877.0	0.070	29.1	0.248	80
07/29/14 05:09	0.068	6.0	18.3	49.2	1,877.0	0.068	29.9	0.255	74
07/29/14 05:10	0.068	6.0	18.3	48.5	1,877.0	0.068	29.9	0.252	84
07/29/14 05:11	0.067	6.0	18.5	49.2	1,877.0	0.069	29.6	0.255	84
07/29/14 05:12	0.067	6.0	19.1	49.3	1,877.0	0.071	29.5	0.256	74
07/29/14 05:13	0.066	6.0	18.5	50.1	1,877.0	0.069	29.2	0.260	83
07/29/14 05:14	0.068	6.0	18.5	49.4	1,877.0	0.069	30.0	0.257	82
07/29/14 05:15	0.067	6.0	18.3	45.8	1,877.0	0.068	29.5	0.238	77
Average	0.065	6.0	18.3	48.3	1,877.0	0.068	28.8	0.251	80
Minimum	0.062	5.9	17.8	44.6	1,877.0	0.066	27.2	0.232	73
Maximum	0.068	6.1	19.1	52.3	1,877.0	0.071	30.0	0.272	85
Summation	1.375	125.9	384.8	1,013.8	39,417.0	1.435	604.8	5.268	1,682
Included Data Points	21	21	21	21	21	21	21	21	21
Total number of Data Points	21	21	21	21	21	21	21	21	21

F = Unit Offline E = Exceedance C = Calibration S = Substituted I = Invalid
M = Maintenance T = Out Of Control * = Suspect U = Startup D = Shutdown

LOW FLOW RUN 10 S20

Average Data

Plant: Manitowoc Public Utilities
Interval: 1 Minute
Type: Roll
Report Period: 07/29/2014 04:55 Through 07/29/2014 05:00
Time Online Criteria: 1 minute(s)

Source		S20					
Parameter)Unit(		S20CPFLO (SCFH)	S20FFACT (MMBTU/CF)	S20PFLOW (KSCFM)	S20PVAC (PSIA)	S20STEAM (KLBS/HR)	S20STEMP (DEGFAHRE)
07/29/14	04:55	3,426,020.0	1,877.0	57.1	4.505	79	199.7
07/29/14	04:56	3,500,423.0	1,877.0	58.3	4.504	84	199.8
07/29/14	04:57	3,444,315.0	1,877.0	57.4	4.504	80	199.5
07/29/14	04:58	3,450,654.0	1,877.0	57.5	4.504	77	199.8
07/29/14	04:59	3,425,179.0	1,877.0	57.1	4.504	85	200.0
07/29/14	05:00	3,470,743.0	1,877.0	57.8	4.503	82	198.6
	Average	3,452,889.0	1,877.0	57.5	4.504	81	199.6
	Minimum	3,425,179.0	1,877.0	57.1	4.503	77	198.6
	Maximum	3,500,423.0	1,877.0	58.3	4.505	85	200.0
	Summation	20,717,334.0	11,262.0	345.2	27.024	487	1,197.4
	Included Data Points	6	6	6	6	6	6
	Total number of Data Points	6	6	6	6	6	6

F = Unit Offline **E = Exceedance** **C = Calibration** **S = Substituted** **U - Startup**
I = Invalid **M = Maintenance** **T = Out Of Control** *** = Suspect** **D - Shutdown**

S20 High Flow Run#1

Average Data

Plant: Manitowoc Public Utilities
Interval: 1 Minute
Type: Roll
Report Period: 07/29/2014 06:30 Through 07/29/2014 06:36
Time Online Criteria: 1 minute(s)

Source		S20					
Parameter)Unit(		S20CPFLO (SCFH)	S20FFACT (MMBTU/CF)	S20PFLOW (KSCFM)	S20PVAC (PSIA)	S20STEAM (KLBS/HR)	S20STEMP (DEGFAHRE)
07/29/14	06:30	5,109,953.0	1,877.0	85.2	4.513	193	229.2
07/29/14	06:31	5,095,733.0	1,877.0	84.9	4.514	192	229.3
07/29/14	06:32	5,085,363.0	1,877.0	84.8	4.517	189	229.4
07/29/14	06:33	5,054,742.0	1,877.0	84.2	4.518	188	229.4
07/29/14	06:34	5,000,166.0	1,877.0	83.3	4.518	189	229.4
07/29/14	06:35	5,060,959.0	1,877.0	84.4	4.518	192	229.3
07/29/14	06:36	5,116,980.0	1,877.0	85.3	4.518	195	229.5
	Average	5,074,842.3	1,877.0	84.6	4.517	191	229.4
	Minimum	5,000,166.0	1,877.0	83.3	4.513	188	229.2
	Maximum	5,116,980.0	1,877.0	85.3	4.518	195	229.5
	Summation	35,523,896.0	13,139.0	592.1	31.616	1,338	1,605.5
	Included Data Points	7	7	7	7	7	7
	Total number of Data Points	7	7	7	7	7	7

F = Unit Offline **E = Exceedance** **C = Calibration** **S = Substituted** **U - Startup**
I = Invalid **M = Maintenance** **T = Out Of Control** *** = Suspect** **D - Shutdown**

S 20 HIGH FLOW Run #3

Average Data

Plant: Manitowoc Public Utilities
Interval: 1 Minute
Type: Roll
Report Period: 07/29/2014 06:37 Through 07/29/2014 06:43
Time Online Criteria: 1 minute(s)

Source		S20					
Parameter)Unit(		S20CPFLO (SCFH)	S20FFACT (MMBTU/CF)	S20PFLOW (KSCFM)	S20PVAC (PSIA)	S20STEAM (KLBS/HR)	S20STEMP (DEGFAHRE)
07/29/14	06:37	5,095,875.0	1,877.0	84.9	4.517	190	229.7
07/29/14	06:38	5,112,336.0	1,877.0	85.2	4.517	187	229.8
07/29/14	06:39	5,118,711.0	1,877.0	85.3	4.516	189	230.2
07/29/14	06:40	5,214,867.0	1,877.0	86.9	4.516	195	230.3
07/29/14	06:41	5,100,358.0	1,877.0	85.0	4.515	195	230.1
07/29/14	06:42	5,160,737.0	1,877.0	86.0	4.515	189	230.6
07/29/14	06:43	5,208,202.0	1,877.0	86.8	4.515	189	230.9
	Average	5,144,440.9	1,877.0	85.7	4.516	191	230.2
	Minimum	5,095,875.0	1,877.0	84.9	4.515	187	229.7
	Maximum	5,214,867.0	1,877.0	86.9	4.517	195	230.9
	Summation	36,011,086.0	13,139.0	600.1	31.611	1,334	1,611.6
	Included Data Points	7	7	7	7	7	7
	Total number of Data Points	7	7	7	7	7	7

F = Unit Offline **E = Exceedance** **C = Calibration** **S = Substituted** **U - Startup**
I = Invalid **M = Maintenance** **T = Out Of Control** *** = Suspect** **D - Shutdown**

S20 HIGH FLOW RUN #3

Average Data

Plant: Manitowoc Public Utilities
Interval: 1 Minute
Type: Roll
Report Period: 07/29/2014 06:44 Through 07/29/2014 06:50
Time Online Criteria: 1 minute(s)

Source		S20					
Parameter)Unit(		S20CPFLO (SCFH)	S20FFACT (MMBTU/CF)	S20PFLOW (KSCFM)	S20PVAC (PSIA)	S20STEAM (KLBS/HR)	S20STEMP (DEGFAHRE)
07/29/14	06:44	5,307,056.0	1,877.0	88.5	4.516	194	230.9
07/29/14	06:45	5,313,869.0	1,877.0	88.6	4.518	194	230.9
07/29/14	06:46	5,297,765.0	1,877.0	88.3	4.518	192	231.7
07/29/14	06:47	5,312,362.0	1,877.0	88.5	4.518	189	231.9
07/29/14	06:48	5,278,123.0	1,877.0	88.0	4.518	188	231.8
07/29/14	06:49	5,193,066.0	1,877.0	86.6	4.517	190	231.9
07/29/14	06:50	5,168,298.0	1,877.0	86.1	4.517	192	231.7
	Average	5,267,219.9	1,877.0	87.8	4.517	191	231.5
	Minimum	5,168,298.0	1,877.0	86.1	4.516	188	230.9
	Maximum	5,313,869.0	1,877.0	88.6	4.518	194	231.9
	Summation	36,870,539.0	13,139.0	614.6	31.622	1,339	1,620.8
	Included Data Points	7	7	7	7	7	7
	Total number of Data Points	7	7	7	7	7	7

F = Unit Offline E = Exceedance C = Calibration S = Substituted U - Startup
I = Invalid M = Maintenance T = Out Of Control * = Suspect D - Shutdown

S20 HIGH FLOW RUN 4

Average Data

Plant: Manitowoc Public Utilities
Interval: 1 Minute
Type: Roll
Report Period: 07/29/2014 07:00 Through 07/29/2014 07:06
Time Online Criteria: 1 minute(s)

Source		S20					
Parameter)Unit(		S20CPFLO (SCFH)	S20FFACT (MMBTU/CF)	S20PFLOW (KSCFM)	S20PVAC (PSIA)	S20STEAM (KLBS/HR)	S20STEMP (DEGFAHRE)
07/29/14	07:00	5,168,174.0	1,877.0	86.1	4.520	194	233.0
07/29/14	07:01	5,148,212.0	1,877.0	85.8	4.519	188	233.1
07/29/14	07:02	5,085,601.0	1,877.0	84.8	4.519	187	233.1
07/29/14	07:03	5,337,338.0	1,877.0	89.0	4.519	195	233.4
07/29/14	07:04	5,313,307.0	1,877.0	88.6	4.519	195	233.4
07/29/14	07:05	5,223,907.0	1,877.0	87.1	4.518	186	233.6
07/29/14	07:06	5,090,312.0	1,877.0	84.8	4.518	185	233.7
	Average	5,195,264.4	1,877.0	86.6	4.519	190	233.3
	Minimum	5,085,601.0	1,877.0	84.8	4.518	185	233.0
	Maximum	5,337,338.0	1,877.0	89.0	4.520	195	233.7
	Summation	36,366,851.0	13,139.0	606.2	31.632	1,330	1,633.3
	Included Data Points	7	7	7	7	7	7
	Total number of Data Points	7	7	7	7	7	7

F = Unit Offline **E = Exceedance** **C = Calibration** **S = Substituted** **U - Startup**
I = Invalid **M = Maintenance** **T = Out Of Control** *** = Suspect** **D - Shutdown**

S20 HIGH FLOW RUN 5

Average Data

Plant: Manitowoc Public Utilities
Interval: 1 Minute
Type: Roll
Report Period: 07/29/2014 07:07 Through 07/29/2014 07:13
Time Online Criteria: 1 minute(s)

Source		S20					
Parameter)Unit(		S20CPFLO (SCFH)	S20FFACT (MMBTU/CF)	S20PFLOW (KSCFM)	S20PVAC (PSIA)	S20STEAM (KLBS/HR)	S20STEMP (DEGFAHRE)
07/29/14	07:07	5,271,428.0	1,877.0	87.9	4.517	188	233.3
07/29/14	07:08	5,112,229.0	1,877.0	85.2	4.517	195	233.6
07/29/14	07:09	5,162,007.0	1,877.0	86.0	4.517	194	233.6
07/29/14	07:10	5,157,250.0	1,877.0	86.0	4.517	189	233.4
07/29/14	07:11	5,125,397.0	1,877.0	85.4	4.520	189	233.3
07/29/14	07:12	5,168,678.0	1,877.0	86.1	4.522	191	233.6
07/29/14	07:13	5,221,050.0	1,877.0	87.0	4.522	195	233.8
	Average	5,174,005.6	1,877.0	86.2	4.519	192	233.5
	Minimum	5,112,229.0	1,877.0	85.2	4.517	188	233.3
	Maximum	5,271,428.0	1,877.0	87.9	4.522	195	233.8
	Summation	36,218,039.0	13,139.0	603.6	31.632	1,341	1,634.6
	Included Data Points	7	7	7	7	7	7
	Total number of Data Points	7	7	7	7	7	7

F = Unit Offline **E = Exceedance** **C = Calibration** **S = Substituted** **U - Startup**
I = Invalid **M = Maintenance** **T = Out Of Control** *** = Suspect** **D - Shutdown**

S20 HIGH FLOW RUN 6

Average Data

Plant: Manitowoc Public Utilities
Interval: 1 Minute
Type: Roll
Report Period: 07/29/2014 07:14 Through 07/29/2014 07:20
Time Online Criteria: 1 minute(s)

Source		S20					
Parameter)Unit(		S20CPFLO (SCFH)	S20FFACT (MMBTU/CF)	S20PFLOW (KSCFM)	S20PVAC (PSIA)	S20STEAM (KLBS/HR)	S20STEMP (DEGFAHRE)
07/29/14	07:14	5,192,992.0	1,877.0	86.6	4.521	191	233.8
07/29/14	07:15	5,141,186.0	1,877.0	85.7	4.520	188	233.8
07/29/14	07:16	5,121,894.0	1,877.0	85.4	4.521	193	233.9
07/29/14	07:17	5,077,685.0	1,877.0	84.6	4.520	194	234.0
07/29/14	07:18	5,075,721.0	1,877.0	84.6	4.521	190	234.0
07/29/14	07:19	5,084,711.0	1,877.0	84.7	4.523	187	234.3
07/29/14	07:20	5,089,053.0	1,877.0	84.8	4.524	192	234.4
	Average	5,111,891.7	1,877.0	85.2	4.521	191	234.0
	Minimum	5,075,721.0	1,877.0	84.6	4.520	187	233.8
	Maximum	5,192,992.0	1,877.0	86.6	4.524	194	234.4
	Summation	35,783,242.0	13,139.0	596.4	31.650	1,335	1,638.2
	Included Data Points	7	7	7	7	7	7
	Total number of Data Points	7	7	7	7	7	7

F = Unit Offline **E = Exceedance** **C = Calibration** **S = Substituted** **U - Startup**
I = Invalid **M = Maintenance** **T = Out Of Control** *** = Suspect** **D - Shutdown**

S20 HIGH FLOW RUN 7

Average Data

Plant: Manitowoc Public Utilities
Interval: 1 Minute
Type: Roll
Report Period: 07/29/2014 07:21 Through 07/29/2014 07:27
Time Online Criteria: 1 minute(s)

Source		S20					
Parameter)Unit(		S20CPFLO (SCFH)	S20FFACT (MMBTU/CF)	S20PFLOW (KSCFM)	S20PVAC (PSIA)	S20STEAM (KLBS/HR)	S20STEMP (DEGFAHRE)
07/29/14	07:21	5,129,291.0	1,877.0	85.5	4.525	193	234.3
07/29/14	07:22	5,129,269.0	1,877.0	85.5	4.526	193	234.2
07/29/14	07:23	5,141,528.0	1,877.0	85.7	4.526	189	234.2
07/29/14	07:24	5,106,321.0	1,877.0	85.1	4.526	188	234.2
07/29/14	07:25	5,071,045.0	1,877.0	84.5	4.526	191	234.3
07/29/14	07:26	5,096,713.0	1,877.0	84.9	4.526	192	234.4
07/29/14	07:27	5,141,053.0	1,877.0	85.7	4.525	192	234.5
	Average	5,116,460.0	1,877.0	85.3	4.526	191	234.3
	Minimum	5,071,045.0	1,877.0	84.5	4.525	188	234.2
	Maximum	5,141,528.0	1,877.0	85.7	4.526	193	234.5
	Summation	35,815,220.0	13,139.0	596.9	31.680	1,338	1,640.1
	Included Data Points	7	7	7	7	7	7
	Total number of Data Points	7	7	7	7	7	7

F = Unit Offline **E = Exceedance** **C = Calibration** **S = Substituted** **U - Startup**
I = Invalid **M = Maintenance** **T = Out Of Control** *** = Suspect** **D - Shutdown**

S20 High Flow Run #8

Average Data

Plant: Manitowoc Public Utilities
Interval: 1 Minute
Type: Roll
Report Period: 07/29/2014 07:28 Through 07/29/2014 07:34
Time Online Criteria: 1 minute(s)

Source		S20					
Parameter)Unit(		S20CPFLO (SCFH)	S20FFACT (MMBTU/CF)	S20PFLOW (KSCFM)	S20PVAC (PSIA)	S20STEAM (KLBS/HR)	S20STEMP (DEGFAHRE)
07/29/14	07:28	5,154,166.0	1,877.0	85.9	4.524	192	234.4
07/29/14	07:29	5,054,577.0	1,877.0	84.2	4.524	192	234.5
07/29/14	07:30	4,978,802.0	1,877.0	83.0	4.524	189	234.6
07/29/14	07:31	5,002,546.0	1,877.0	83.4	4.524	187	234.6
07/29/14	07:32	5,089,266.0	1,877.0	84.8	4.524	190	234.4
07/29/14	07:33	5,167,158.0	1,877.0	86.1	4.526	195	234.4
07/29/14	07:34	5,342,989.0	1,877.0	89.0	4.528	195	234.9
	Average	5,112,786.3	1,877.0	85.2	4.525	191	234.5
	Minimum	4,978,802.0	1,877.0	83.0	4.524	187	234.4
	Maximum	5,342,989.0	1,877.0	89.0	4.528	195	234.9
	Summation	35,789,504.0	13,139.0	596.4	31.674	1,340	1,641.8
	Included Data Points	7	7	7	7	7	7
	Total number of Data Points	7	7	7	7	7	7

F = Unit Offline **E = Exceedance** **C = Calibration** **S = Substituted** **U - Startup**
I = Invalid **M = Maintenance** **T = Out Of Control** *** = Suspect** **D - Shutdown**

S20 HIGH FLOW Run # 9

Average Data

Plant: Manitowoc Public Utilities
Interval: 1 Minute
Type: Roll
Report Period: 07/29/2014 07:35 Through 07/29/2014 07:41
Time Online Criteria: 1 minute(s)

Source		S20					
Parameter)Unit(		S20CPFLO (SCFH)	S20FFACT (MMBTU/CF)	S20PFLOW (KSCFM)	S20PVAC (PSIA)	S20STEAM (KLBS/HR)	S20STEMP (DEGFAHRE)
07/29/14	07:35	5,194,782.0	1,877.0	86.6	4.529	190	234.7
07/29/14	07:36	5,215,619.0	1,877.0	86.9	4.528	188	234.9
07/29/14	07:37	5,151,839.0	1,877.0	85.9	4.528	188	235.2
07/29/14	07:38	5,105,106.0	1,877.0	85.1	4.528	188	235.1
07/29/14	07:39	5,139,408.0	1,877.0	85.7	4.527	192	235.1
07/29/14	07:40	5,185,042.0	1,877.0	86.4	4.527	193	235.0
07/29/14	07:41	5,201,377.0	1,877.0	86.7	4.526	193	235.0
	Average	5,170,453.3	1,877.0	86.2	4.528	190	235.0
	Minimum	5,105,106.0	1,877.0	85.1	4.526	188	234.7
	Maximum	5,215,619.0	1,877.0	86.9	4.529	193	235.2
	Summation	36,193,173.0	13,139.0	603.3	31.693	1,332	1,645.0
	Included Data Points	7	7	7	7	7	7
	Total number of Data Points	7	7	7	7	7	7

F = Unit Offline **E = Exceedance** C = Calibration **S = Substituted** **U - Startup**
I = Invalid **M = Maintenance** **T = Out Of Control** *** = Suspect** **D - Shutdown**

S20 HIGH FLOW RUN 10

Average Data

Plant: Manitowoc Public Utilities
Interval: 1 Minute
Type: Roll
Report Period: 07/29/2014 07:42 Through 07/29/2014 07:48
Time Online Criteria: 1 minute(s)

Source		S20					
Parameter)Unit(		S20CPFLO (SCFH)	S20FFACT (MMBTU/CF)	S20PFLOW (KSCFM)	S20PVAC (PSIA)	S20STEAM (KLBS/HR)	S20STEMP (DEGFAHRE)
07/29/14	07:42	5,207,424.0	1,877.0	86.8	4.526	192	234.9
07/29/14	07:43	5,180,790.0	1,877.0	86.3	4.525	188	235.0
07/29/14	07:44	5,162,176.0	1,877.0	86.0	4.525	187	235.1
07/29/14	07:45	5,126,292.0	1,877.0	85.4	4.524	188	234.9
07/29/14	07:46	5,096,479.0	1,877.0	84.9	4.526	194	235.0
07/29/14	07:47	5,119,535.0	1,877.0	85.3	4.528	195	235.0
07/29/14	07:48	5,188,195.0	1,877.0	86.5	4.528	194	235.1
	Average	5,154,413.0	1,877.0	85.9	4.526	191	235.0
	Minimum	5,096,479.0	1,877.0	84.9	4.524	187	234.9
	Maximum	5,207,424.0	1,877.0	86.8	4.528	195	235.1
	Summation	36,080,891.0	13,139.0	601.2	31.682	1,338	1,645.0
	Included Data Points	7	7	7	7	7	7
	Total number of Data Points	7	7	7	7	7	7

F = Unit Offline **E = Exceedance** C = Calibration **S = Substituted** **U - Startup**
I = Invalid **M = Maintenance** **T = Out Of Control** * = Suspect **D - Shutdown**

APPENDIX I

PROCEDURES

Please Note: In an effort to conserve paper, the procedure section of the appendix has been reserved for explanations of EPA methodology deviations. Please refer to the specific EPA Methods on the following EPA website: http://www.epa.gov/ttn/emc/

APPENDIX J

CALCULATION EQUATIONS

Summarize the results on a data sheet similar to that shown in Figure 2–2 (in Section 18.0).

12.1 All data from the RM and CEMS must be on a consistent dry basis and, as applicable, on a consistent diluent basis and in the units of the emission standard. Correct the RM and CEMS data for moisture and diluent as follows:

12.1.1 Moisture Correction (as applicable). Correct each wet RM run for moisture with the corresponding Method 4 data; correct each wet CEMS run using the corresponding CEMS moisture monitor date using Equation 2–1.

$$\text{Concentration}_{(\text{dry})} = \frac{Concentration_{wet}}{(1 - B_{ws})} \qquad \text{Eq. 2-1}$$

12.1.2 Correction to Units of Standard (as applicable). Correct each dry RM run to the units of the emission standard with the corresponding Method 3B data; correct each dry CEMS run using the corresponding CEMS diluent monitor data as follows:

12.1.2.1 Correct to Diluent Basis. The following is an example of concentration (ppm) correction to 7% oxygen.

$$\text{ppm}_{(\text{corr})} = \text{ppm}_{(\text{uncorr})} \left[\frac{20.9 - 7.0}{20.9 - \%O_{2(dry)}} \right] \qquad \text{Eq. 2-2}$$

The following is an example of mass/gross calorific value (lbs/million Btu) correction.

lbs/MMBtu=Conc(dry)(F-factor) (20.9/20.9-%0_2)

12.2 Arithmetic Mean. Calculate the arithmetic mean of the difference, d, of a data set as follows:

$$\bar{d} = \frac{1}{n} \sum_{i=1}^{n} d_i \qquad \text{Eq. 2-3}$$

Where:

n=Number of data points.

$$\sum_{i=1}^{n} d_i = \text{Algebraic summation of the individual differences } d_i.$$

12.3 Standard Deviation. Calculate the standard deviation, S_d, as follows:

MPU00297

$$S_d = \left[\frac{\sum_{i=1}^{n} d_i^2 - \frac{\left[\sum_{i=1}^{n} d_i\right]^2}{n}}{n-1} \right]^{\frac{1}{2}} \qquad Eq.\ 2\text{-}4$$

12.4 Confidence Coefficient. Calculate the 2.5 percent error confidence coefficient (one-tailed), CC, as follows:

$$CC = t_{0.975} \frac{S_d}{\sqrt{n}} \qquad Eq.\ 2\text{-}5$$

Where:

$t_{0.975}$=t-value (see Table 2–1).

12.5 Relative Accuracy. Calculate the RA of a set of data as follows:

$$RA = \frac{\left[\left|\bar{d}\right| + \left|CC\right|\right]}{\overline{RM}} \times 100 \qquad Eq.\ 2\text{-}6$$

Where:

|d|=Absolute value of the mean differences (from Equation 2–3).

|CC|=Absolute value of the confidence coefficient (from Equation 2–3).

RM=Average RM value. In cases where the average emissions for the test are less than 50 percent of the applicable standard, substitute the emission standard value in the denominator of Eq. 2–6 in place ofRM. In all other cases, useRM.

13.0 Method Performance

13.1 Calibration Drift Performance Specification. The CEMS calibration must not drift or deviate from the reference value of the gas cylinder, gas cell, or optical filter by more than 2.5 percent of the span value. If the CEMS includes pollutant and diluent monitors, the CD must be determined separately for each in terms of concentrations (See Performance Specification 3 for the diluent specifications), and none of the CDs may exceed the specification.

13.2 Relative Accuracy Performance Specification. The RA of the CEMS must be no greater than 20 percent when RMis used in the denominator of Eq. 2–6 (average emissions during test are greater than 50 percent of the emission standard) or 10 percent when the applicable emission standard is used in the denominator of Eq. 2–6 (average emissions during test are less than 50 percent of the emission standard). For SO_2emission standards of 130 to and including 86 ng/J (0.30 and 0.20 lb/million Btu), inclusive, use 15 percent of the applicable standard; below 86 ng/J (0.20 lb/million Btu), use 20 percent of the emission standard.

MPU00298

APPENDIX K

AETB REQUIREMENTS

interpoll

Interpoll Laboratories, Inc.
4500 Ball Road NE
Circle Pines, MN 55014-1819
Tel: 763-786-6020
Fax: 763-786-7854
www.interpoll-labs.com

August 21, 2014

Manitowoc Public Utilities
Thomas E. Reed
1303 South 8th Street
P.O. Box 1090
Manitowoc, WI 54221-1090

Re: Part 75 Air Emission Testing Body Requirements

Mr. Reed

This letter addresses the requirements of 40 CFR Part 75. Specifically; effective March 27, 2012, 40 CFR Part 75 test programs must be conducted by an Air Emissions Testing Body (AETB) in accordance with the requirements set forth in ASTM D 7036-04, Standard Practice for Competent Air Emission Testing Body.

Consistent with Section 6.2.1(c), Appendix A, 40 CFR Part 75, the AETB shall provide to each customer a certification that the AETB operates in conformance with, and that data has been collected in accordance with, the requirements of ASTM D 7036-04.

This letter serves as certification that Interpoll Laboratories, Inc. does provide data and services which comply with the above requirements.

Regards,

Daniel Despen
President
Interpoll Laboratories, Inc.

SOURCE EVALUATION SOCIETY

Qualified Source Testing Individual

LET IT BE KNOWN THAT

AARON M. WILSON

HAS SUCCESSFULLY PASSED A COMPREHENSIVE EXAMINATION AND SATISFIED EXPERIENCE REQUIREMENTS IN ACCORDANCE WITH THE GUIDELINES ISSUED BY THE SES QUALIFIED SOURCE TEST INDIVIDUAL REVIEW BOARD FOR

GASEOUS POLLUTANTS INSTRUMENTAL SAMPLING METHODS

ISSUED THIS 22ND DAY OF FEBRUARY 2012 AND EFFECTIVE UNTIL FEBRUARY 21ST, 2017

Peter R. Westlin, QSTI/QSTO Review Board

C. David Bagwell, QSTI/QSTO Review Board

Peter S. Pakalnis, QSTI/QSTO Review Board

Karen D. Kajiya-Mills , QSTI/QSTO Review Board

LeRoy Owens, QSTI/QSTO Review Board

Glenn C. England, QSTI/QSTO Review Board

APPLICATION NO. 2012-643

MPU00301

SOURCE EVALUATION SOCIETY

Qualified Source Testing Individual

LET IT BE KNOWN THAT

AARON M. WILSON

HAS SUCCESSFULLY PASSED A COMPREHENSIVE EXAMINATION AND SATISFIED EXPERIENCE REQUIREMENTS IN ACCORDANCE WITH THE GUIDELINES ISSUED BY THE SES QUALIFIED SOURCE TEST INDIVIDUAL REVIEW BOARD FOR

MANUAL GAS VOLUME MEASUREMENTS AND ISOKINETIC PARTICULATE SAMPLING METHODS

ISSUED THIS 22ND DAY OF FEBRUARY 2012 AND EFFECTIVE UNTIL FEBRUARY 21ST, 2017

Peter R. Westlin, QSTI/QSTO Review Board

C. David Bagwell, QSTI/QSTO Review Board

Peter S. Pakalnis, QSTI/QSTO Review Board

Karen D. Kajiya-Mills , QSTI/QSTO Review Board

LeRoy Owens, QSTI/QSTO Review Board

Glenn C. England, QSTI/QSTO Review Board

APPLICATION NO. 2012-643

MPU00302

Stack Vision Entry Requirements

Required AETB Data Per Part 75

Field	Entry	Description
QI Last Name	Aaron	Required-Qualified Individual's last name
QI First Name	Wilson	Required-Qualified Individual's first name
QI Middle Initial	M.	Required-Qualified Individual's middle initial
AETB Name	Interpoll Laboratories, Inc.	Required-The AETB company whom the Qualified Individual represents.
AETB Phone Number	763-786-6020	Required-AETB company phone number.
AETB Email	stack@interpoll-labs.com	Required-AETB company email address or the email address of the qualified individual.
Exam Date	1/13/2012	Required-Date the Qualified Individual completed the AETB exam that certifies this person to conduct RATA tests.
Exam Provider Name	Source Evaluation Society	Required-Name of the agency who provided the exam
Exam Provider Email	qstiprogram@gmail.com	Required-Email address for the agency who provided the exam.
Comment		Optional field for additional comments.

Note-Interpoll Laboratories will be providing a letter of certification signed by a member of the senior management staff of the AETB for the clients records.

MPU00303