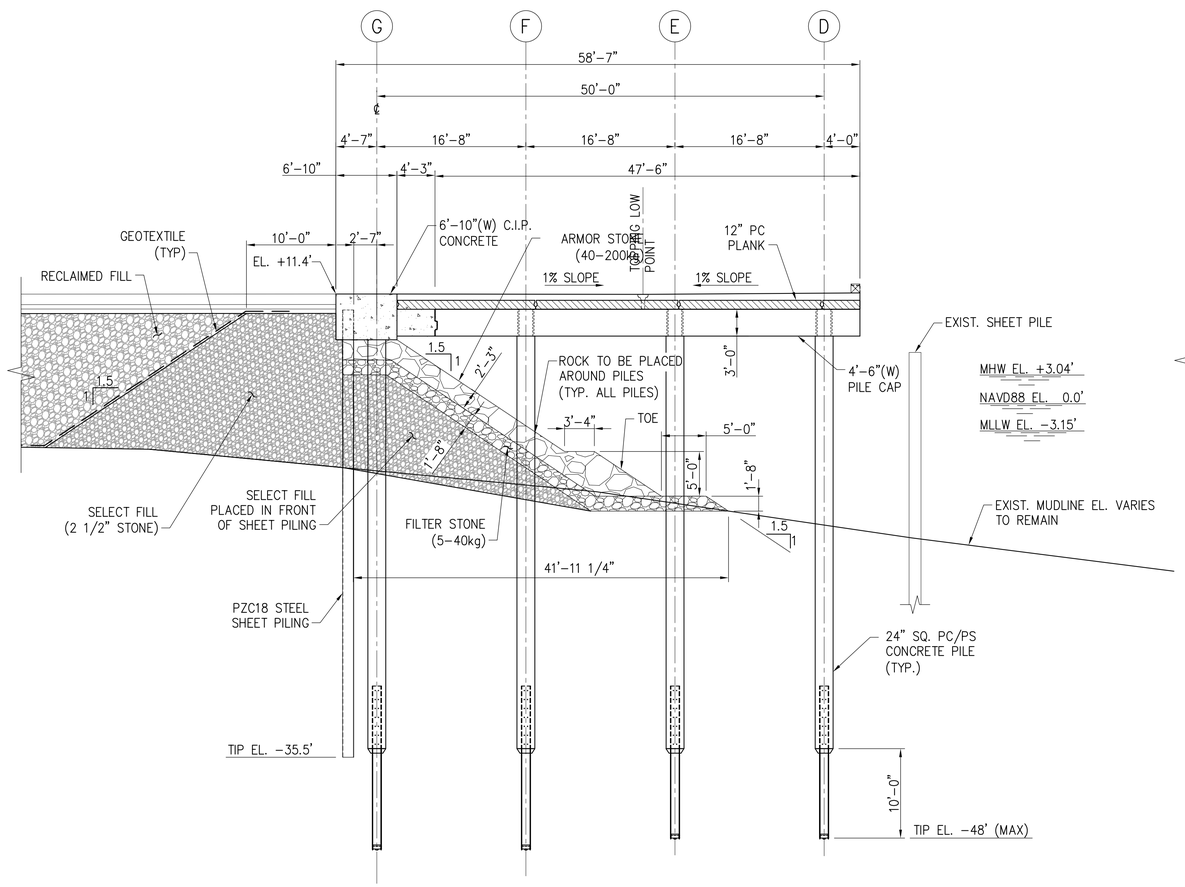

C SECTION
S-1,S-6 SCALE: 1/8"=1'-0"

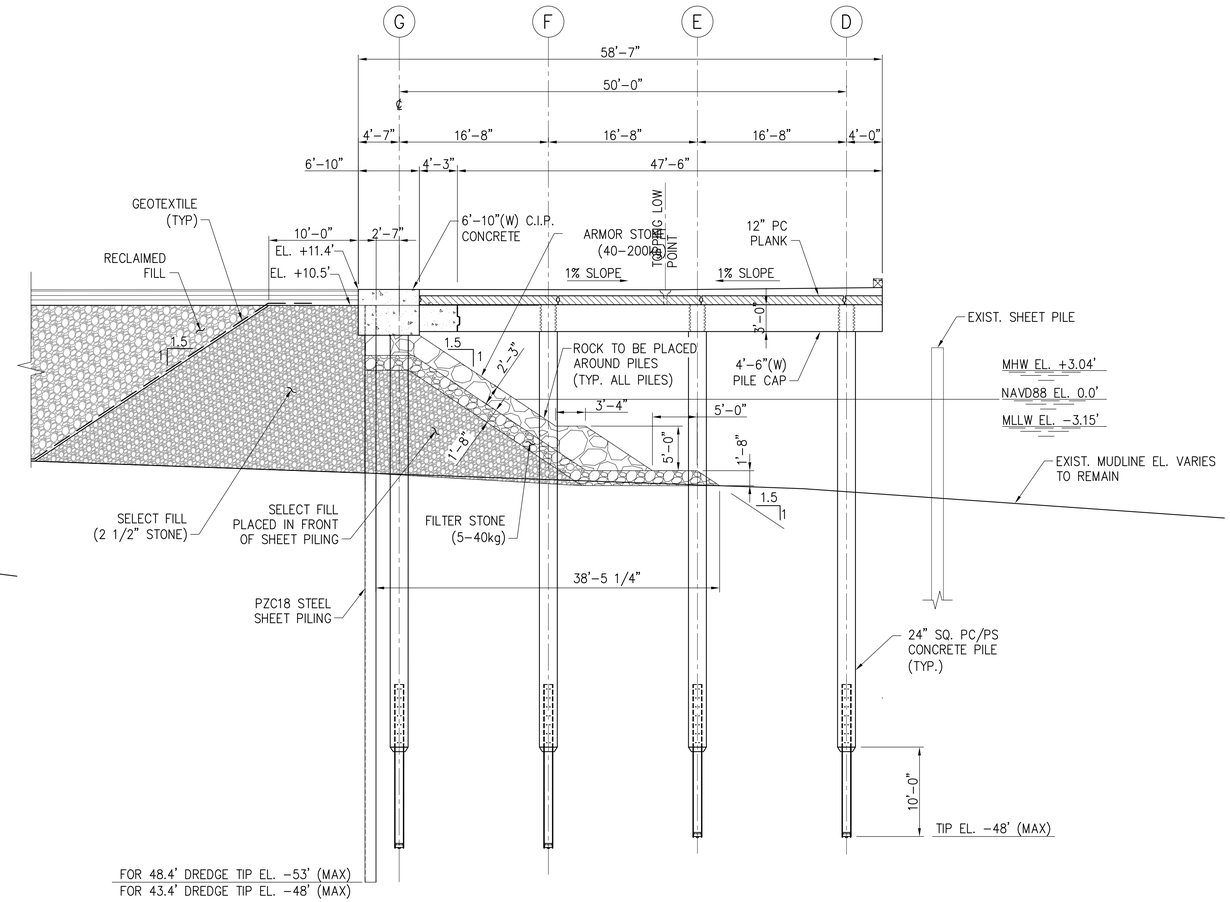

D SECTION
S-1,S-6 SCALE: 1/8"=1'-0"

1/8"=1'-0" 0 5 10 15 FT.

GRAPHIC SCALES
CHECK BEFORE USE

IF SHEET IS LESS THAN 24" X 36"
IT IS A REDUCED PRINT.
SCALE ACCORDINGLY

S:\W\WSPCT300\Contract\08-Structural\WSPCT300-S011-00.dwg 05/19/10 10:04 katnkM

REVISIONS	NO.	DESCRIPTION	DATE	BY	NO.	DESCRIPTION	DATE	BY

Halcrow

WESTON SOLUTIONS

DESIGNED BY Z E FG	COMMONWEALTH OF PENNSYLVANIA PHILADELPHIA REGIONAL PORT AUTHORITY PHILADELPHIA, PA	SCALE 1/8"=1'-0"	REVISION
DRAWN BY		DATE JULY 15, 2010	
CHECKED BY	SOUTHPORT PROJECT	DRAWING NO.	
PROJECT ENGR	TYPICAL NORTH WHARF CROSS SECTIONS	S-11	