FIGURE 34

OFRP GROUNDWATER CHARACTERIZATION PROJECT
SANTA FE SPRINGS, CALIFORNIA

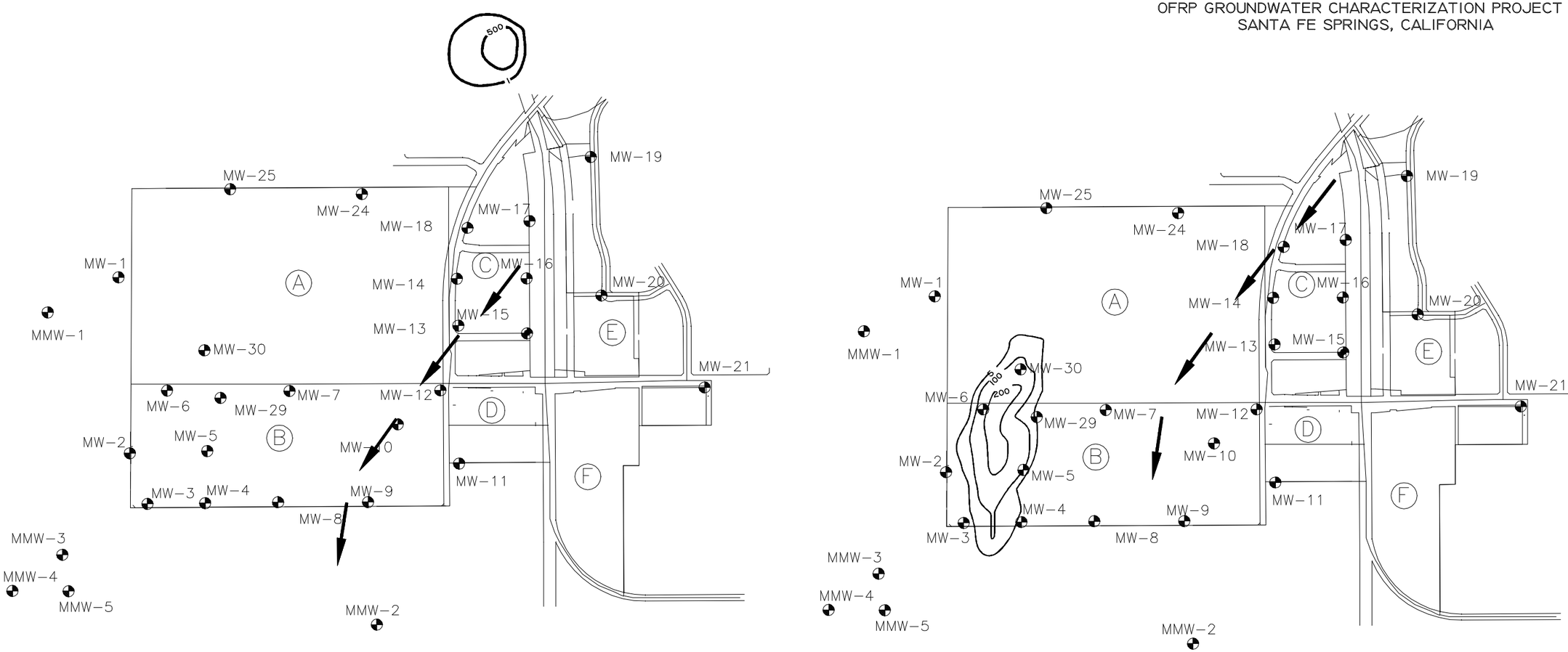

A) SIMULATED INITIAL TRICHLOROETHENE PLUME
POTENTIAL SOURCE AREA SENERIO

B) MODELED DOWNGRADIENT TRANSPORT
OF SIMULATED TRICHLOROETHENE PLUME AFTER 10 YEARS

LEGEND

- GROUNDWATER MONITORING WELL LOCATION
- 1 TRICHLOETHENE CONCENTRATION CONTOUR IN PPB
- DIRECTION OF GROUNDWATER FLOW

N

0 800

McLaren Hart

OFRP95\MISBP32.DWG (4-30-96) vlb