Metal Shredder Emissions Testing Report

Metal Management Midwest, Inc.
Metal Shredder Facility
2500 S. Paulina Street
Chicago, Illinois
Project No. M193411
Testing Date: September 20, 2019

mostardi platt

Metal Shredder Emissions Testing Report

Metal Management Midwest, Inc.
Metal Shredder Facility
2500 S. Paulina Street
Chicago, Illinois
Testing Date: September 20, 2019

Report Submittal Date
October 18, 2019

© Copyright 2019
All rights reserved in
Mostardi Platt

Project No. M193411

Corporate Headquarters
888 Industrial Drive
Elmhurst, Illinois 60126
630-993-2100

Chicago, IL | Crown Point, IN | Concord, NC | Mendota Heights, MN | Denver, CO

TABLE OF CONTENTS

1.0 EXECUTIVE SUMMARY 1

2.0 PROCESS DESCRIPTION 3

3.0 TEST METHODOLOGY 3
- Method 1 Sample and Velocity Traverse Determination 4
- Method 2 Volumetric Flow Rate Determination 4
- Method 3 Oxygen (O_2)/Carbon Dioxide (CO_2) Determination 4
- Method 5 Filterable Particulate Matter (FPM) Determination 4
- Method 202 Condensable Particulate Determination 4
- Method 25A Volatile Organic Compounds (VOC) Determination 5
- Method 29 Trace Metals Determination 5
- Method 320 Fourier Transform Infrared (FTIR) Detector Multi-Gas Determination for Methane and Ethane 5

4.0 TEST RESULT SUMMARIES 6

5.0 CERTIFICATION 11

APPENDIX
- Appendix A – Infeed, Shredder Amperage, Fan Amperage, and Water Usage Data 13
- Appendix B - Test Section Diagrams 20
- Appendix C - Sample Train Diagrams 23
- Appendix D - Calculation Nomenclature and Formulas 30
- Appendix E – Sample Analysis Data 44
- Appendix F - Reference Method Test Data (Computerized Sheets) 64
- Appendix G - Field Data Sheets 91
- Appendix H - Calibration Data 114
- Appendix I – Gas Cylinder Certifications 139

© Mostardi Platt

1.0 EXECUTIVE SUMMARY

As retained by Metal Management Midwest, Inc. (MMMI), in accordance with the Shredder Emissions Testing Protocol (Testing Protocol) prepared by Trinity Consultants (Trinity) and approved by the US Environmental Protection Agency (USEPA), under the direction of Trinity, on September 20, 2019 MOSTARDI PLATT conducted an emissions testing program on metal shredder emissions at the MMMI Metal Shredder Facility located at 2500 S. Paulina Street, Chicago, Illinois (the Facility). This report summarizes the results of the test program and test methods used.

MOSTARDI PLATT implemented the Testing Protocol in accordance with the USEPA Clean Air Act Administrative Consent Order dated December 20, 2018 (the Order, including the requirements set out in Appendix B of the Order).

In accordance with the Order and the Testing Protocol, MOSTARDI PLATT conducted testing of the Facility's metal shredder emissions in order to evaluate emissions of volatile organic compounds (VOCs), particulate matter (PM), and specified metals under representative conditions. In accordance with the Order, this test was conducted within 300 calendar days after the effective date of the Order.

The testing location, test dates, and test parameters are summarized below.

TEST INFORMATION		
Test Location	**Test Date**	**Test Parameters**
Shredder Emissions	September 20, 2019	Filterable Particulate Matter (FPM), Condensable Particulate Matter (CPM), Total Particulate Matter (TPM), Volatile Organic Compounds (VOC), and Trace Metals including: Antimony (Sb), Arsenic (As), Barium (Ba), Beryllium (Be), Cadmium (Cd), Chromium (Cr), Cobalt (Co), Copper (Cu), Lead (Pb), Manganese (Mn), Mercury (Hg), Nickel (Ni), Phosphorus (P), Selenium (Se), Silver (Ag), Thallium (Tl), and Zinc (Zn).

The purpose of this test program was to determine concentrations and emission rates of the above listed parameters. A complete summary of emission testing results follows the narrative portion of this report. Below is a summary of VOC emission testing results. All units of weight are in "net tons" (2000 lb per net ton).

VOC TEST RESULTS				
Parameter	Test 1	Test 2	Test 3	Average
Total Infeed Material (net tons)*	316.75	311.41	319.67	315.93
Total Infeed Material (adjusted, net tons)*	297.75	292.73	300.49	296.97
Operating Rate (net tons/hr)*	211.17	207.61	213.11	210.63
Operating Rate (adjusted, net tons/hr)*	198.50	195.15	200.32	197.99
Volumetric Flow Rate (scfm)	47,120	45,445	40,241	44,269
VOC Emission Rate (lb/hr)	15.21	21.15	15.95	17.44
VOC Emission Factor (lb/net ton)	0.072	0.102	0.076	0.083
VOC Emission Factor (adjusted, lb/net ton)*	0.077	0.108	0.080	0.088
Estimated Capture Efficiency (%)**	98	98	98	98
Adjusted Emission Factor (lb/net ton)***	0.078	0.111	0.081	0.090

© Mostardi Platt

*The unadjusted Total Infeed Material/Operating Rate was based on the net tons of Infeed Material purchased and weighed at the scale for placement in the stockpiled used for this test. At the end of each test run there was remaining material designated as Infeed Material but not used in the run. MMMI estimated the amount of this remaining material per run at 6% by weight of the total Infeed Material purchased, weighed and stockpiled. The adjusted Total Infeed Material/Operating Rate was calculated as 94% of the unadjusted Total Infeed Material/Operating Rate. The net effect is to increase the VOC Emission Factor, as noted above.

** Mostardi Platt estimated the capture efficiency for the September 20 test to be at least 98%. After USEPA identified capture efficiency concerns with a test run on 9/5/19, MMMI conducted a thorough review of the temporary enclosure (TE) installed for the emissions test and identified an opening along the foundation wall on the south side of the shredder. MMMI applied additional sheeting around that area, effectively sealing off the opening. MMMI also removed the screen on the duct work which MMMI identified as restricting the emissions flow rate by collecting debris on the screen mesh. In response, MMMI installed a container (pod) after the emissions sampling points, using water misters to contain debris within the pod. These corrective measures resulted in substantially improved capture efficiency compared with the 9/5/19 test run, as observed through the use of FLIR Systems camera.

***The Adjusted Emission Factor is calculated by dividing the VOC Emission Factor (adjusted) by the Capture Efficiency.

Below is a summary of PM (FPM, CPM & TPM) and metals emissions testing results.

TEST RESULTS		
Test Parameter	**Concentration**	**Emission Rate, lb/hr**
FPM	0.0195 gr/dscf	6.301
CPM	0.0010 gr/dscf	0.320
TPM	0.0205 gr/dscf	6.622
Sb	≤ 0.81 ppb	6.36E-04
As	≤ 1.19 ppb	≤ 5.72E-04
Ba	10.59 ppb	9.39E-03
Be	≤ 0.54 ppb	≤ 3.10E-05
Cd	≤ 0.31 ppb	≤ 2.26E-04
Cr	5.58 ppb	1.90E-03
Co	≤ 0.72 ppb	≤ 2.73E-04
Cu	9.59 ppb	3.93E-03
Pb	6.24 ppb	8.30E-03
Mn	17.11 ppb	6.07E-03
Hg	≤ 0.82 ppb	≤ 1.07E-03
Ni	4.45 ppb	1.70E-03
P	≤ 195.94 ppb	≤ 3.90E-02
Se	≤ 0.68 ppb	≤ 3.00E-04
Ag	≤ 0.09 ppb	≤ 6.28E-05
Tl	≤ 0.03 ppb	≤ 4.16E-05
Zn	349.38 ppb	1.47E-01

Infeed, shredder amperage, fan amperage, and water usage data as provided by Metal Management Midwest, Inc. are included in Appendix A.

© Mostardi Platt

The individuals leading the MMMI team implementing the Testing Program are:

TEST PERSONNEL INFORMATION		
Location	**Address**	**Contact**
Facility Lead	Metal Management Midwest, Inc. 2500 S. Paulina Street Chicago, Illinois 60608	Ms. Deborah Hays SHEC Director, Midwest Region (773) 254-1200 (phone) Debbie.hays@simsmm.com
Project Lead	Trinity Consultants, Inc. 15660 Midwest Road Oakbrook Terrace, IL 60181	Mr. Richard Trzupek Principal Consultant (630) 495-1470 (phone) rtrzupek@trinityconsultants.com
Testing Lead	Mostardi Platt 888 Industrial Drive Elmhurst, Illinois 60126	Mr. Eric L. Ehlers Director, Field Operations (630) 993-2663 (phone) eehlers@mp-mail.com

The test crew consisted of Messrs. R. Sollars, J. Gross, J. Carlson, D. Kossack, and E. Ehlers of Mostardi Platt.

2.0 PROCESS DESCRIPTION

At the Facility MMMI receives, handles, stockpiles and/or otherwise stores, processes, and recycles ferrous and non-ferrous recyclable metallic materials and produces and ships the specification-grade recyclable metals resulting from such processing and recycling. At the Shredder, end-of-life vehicles (ELVs), major appliances, other post-consumer sheet metal, and metal clips received directly from manufacturers (Feedstock Material) are mechanically processed (shredded) through a large hammer mill, with the processed material discharged from the hammer mill mechanically separated in order to produce specification-grade ferrous metal and other recyclable metals.

The industrial process subject to the Test Protocol is the shredding of Feedstock Material in the Shredder (the Shredding Process). As set out in the Test Protocol, the emissions point for the test runs described in this report was the under-mill oscillator (UMO), based on the use of the Temporary Enclosure described in the Test Protocol.

3.0 TEST METHODOLOGY

Emission testing was conducted following the methods specified in 40 CFR, Part 60, Appendix A. Schematics depicting the test location and sampling trains are found in Appendices B and C, respectively. Explanations of nomenclature and calculations are found in Appendix D. Sample analysis data are found in Appendix E. Reference method data and field data sheets for each test run are found in Appendices F and G, respectively.

The following methodologies were used during the test program:

© Mostardi Platt

Method 1 Sample and Velocity Traverse Determination

Test measurement points were selected in accordance with Method 1. The characteristics of the measurement location are summarized below.

TEST POINT INFORMATION					
Location	**Duct Diameter**	**Upstream Diameters**	**Downstream Diameters**	**Test Parameter**	**Number of Sampling Points**
Shredder Emissions	4.167’	7.0’	22.0’	FPM, CPM, TPM, Trace Metals	24
				VOC	1

Method 2 Volumetric Flow Rate Determination

Flue gas velocity was measured following Method 2, for purposes of calculating the gas volumetric flow rate and emission rates on a lb/hr and basis. An S-type pitot tube, incline manometer, thermocouple and temperature readout were used to determine gas velocity at each sample point at the test location. All of the equipment used was calibrated in accordance with the specifications of the Method. Calibration data are presented in Appendix H.

Method 3 Oxygen (O_2)/Carbon Dioxide (CO_2) Determination

Flue gas molecular weight was determined in accordance with Method 3. A Fyrite analyzer was used to determine stack gas oxygen and carbon dioxide content and, by difference, nitrogen content.

Method 5 Filterable Particulate Matter (FPM) Determination

Stack gas FPM concentrations and emission rates were determined in accordance with USEPA Method 5. An Environmental Supply Company, Inc. sampling train was used to sample flue gas at an isokinetic rate, as specified in the Method. Filter and probe temperatures were operated at 248°F +/- 25ºF as described in the Method. Particulate matter in the sample probe was recovered using an acetone wash, a minimum of three passes were made with the brush, after which time the acetone wash was determined to be clean. The probe wash and filter catch were analyzed by Mostardi Platt in accordance with the Method in the Elmhurst, Illinois laboratory. Sample analysis data are found in Appendix E. All of the equipment used was calibrated in accordance with the specifications of the Method. Calibration data are presented in Appendix H.

Method 202 Condensable Particulate Determination

Stack gas condensable particulate matter concentrations and emission rates were determined in accordance with USEPA Method 202, in conjunction with Method 5 filterable particulate sampling. This method applies to the determination of condensable particulate matter (CPM) emissions from stationary sources. It is intended to represent condensable matter as material that condenses after passing through a filter and as measured by this Method. A glass-lined probe was used for sampling.

The CPM was collected in the impinger portion of the Method 5 (Appendix A, 40CFR60) sampling train. The total of both organic and inorganic fractions represents the CPM. The sampling system consisted of a condensing coil, followed by a water dropout impinge, one modified Greenburg Smith impinger and an ambient temperature filter followed the water dropout impinger. The ambient temperature filter was maintained between 65ºF to 85ºF. The impinger contents and

© Mostardi Platt

condenser coil were immediately purged after each run with nitrogen (N_2) to remove dissolved sulfur dioxide (SO_2) gases from the impinger contents. The impinger solution was then rinsed with deionized water followed with acetone, and finally, hexane.

Method 25A Volatile Organic Compounds (VOC) Determination

The Method 25A sampling and measurement system meets the requirements for stack sampling of VOC set forth by the United States Environmental Protection Agency (USEPA). In particular, it meets the requirements of USEPA Reference Method 25A, "Determination of Total Gaseous Organic Concentration Using a Flame Ionization Analyzer," 40CFR60, Appendix A. This method applies to the measurement of total gaseous organic concentration of hydrocarbons. With this method, the gas sample was extracted from the sample location through a heated Teflon sample line, through an FTIR analyzer, then exhausted to the flame ionization detector (FID) analyzer. Methane and ethane concentrations from the FTIR were subtracted from the total hydrocarbon (THC) reading to determine VOC concentration.

The flame ionization detector (FID) used during this program, was a Thermo 51i High-Temperature Hydrocarbon Analyzer. It is a highly sensitive FID that provides a direct reading of organic vapor concentrations with linear ranges of 0-10, 100, 1000, and 10,000 ppm by volume. The instrument was calibrated using ultra-zero air and propane in air EPA Protocol standards for the total hydrocarbon (THC) determination. The calibrations were performed before and after sampling with calibration checks performed between each test run. Sample times and locations were logged simultaneously on data loggers.

The calibration data are found in Appendix H and copies of the calibration gas cylinder certifications are found in Appendix I.

Method 29 Trace Metals Determination

Stack gas metals concentrations and emission rates were determined in accordance with Method 29. An Environmental Supply Company sampling train was used to sample stack gas, in the manner specified in the Method. Analyses of the samples collected were conducted by Maxxam Analytics of Mississauga, Ontario. Laboratory analysis data are found in Appendix E. All of the equipment used was calibrated in accordance with the specifications of the Method. Calibration data are presented in Appendix H.

Method 320 Fourier Transform Infrared (FTIR) Detector Multi-Gas Determination for Methane and Ethane

FTIR methane and ethane data was collected using an MKS MultiGas 2030 FTIR spectrometer.

The FTIR was equipped with a temperature-controlled, 5.11 meter multi-pass gas cell maintained at 191°C. Gas flows and sampling system pressures were monitored using a rotameter and pressure transducer. All data was collected at 0.5 cm^{-1} resolution. Each spectrum was derived from the coaddition of 64 scans, with a new data point generated approximately every one minute. Analyzer data for each run is presented in Appendix F.

© Mostardi Platt

4.0 TEST RESULT SUMMARIES

Metal Management Midwest, Inc. Paulina Street Facility Shredder Emissions Volatile Organic Compound Summary															
Test No.	Date	Start Time	End Time	Operating Rate, net tons/hr	Flowrate, SCFM	THC ppm as C_3H_8 (wet)	CH_4 ppm as CH_4 (wet)	CH_4 ppm as C_3H_8 (wet)	C_2H_6 ppm as C_2H_6 (wet)	C_2H_6 ppm as C_3H_8 (wet)	NMNE ppm as C_3H_8 (wet)	NMNE VOC lb/hr Emission Rate	NMNE VOC, Emission Factor, lb/net ton	Estimated Capture Efficiency, %	Adjusted VOC Emission Factor, lb/net ton
1	09/20/19	9:00	9:59	198.50	47,120	48.9	2.6	1.0	1.1	0.8	47.1	15.21	0.077	98.00%	0.078
2	09/20/19	11:40	12:39	195.15	45,445	70.1	2.3	0.9	1.9	1.3	67.9	21.15	0.108	98.00%	0.111
3	09/20/19	13:45	14:44	200.32	40,241	60.0	2.3	0.9	1.8	1.2	57.9	15.95	0.080	98.00%	0.081
Average				197.99	44,269	59.7	2.4	1.0	1.6	1.1	57.6	17.44	0.088	98.00%	0.090

© Mostardi Platt

Client: Metal Management Midwest, Inc.
Facility: Paulina Street Facility
Test Location: Shredder Emissions
Test Method: 5/202

Source Condition	**Normal**	**Normal**	**Normal**	
Date	**9/20/19**	**9/20/19**	**9/20/19**	
Start Time	**9:00**	**11:30**	**13:51**	
End Time	**10:26**	**13:01**	**15:13**	
	Run 1	**Run 2**	**Run 3**	**Average**
Stack Conditions				
Average Gas Temperature, °F	88.4	93.8	92.3	91.5
Flue Gas Moisture, percent by volume	4.6%	3.4%	5.2%	4.4%
Average Flue Pressure, in. Hg	29.30	29.27	29.27	29.28
Gas Sample Volume, dscf	31.557	33.699	33.901	33.052
Average Gas Velocity, ft/sec	47.683	51.276	52.431	50.463
Gas Volumetric Flow Rate, acfm	39,017	41,957	42,902	41,292
Gas Volumetric Flow Rate, dscfm	35,093	37,804	38,036	36,978
Gas Volumetric Flow Rate, scfm	36,785	39,136	40,123	38,681
Average %CO_2 by volume, dry basis	0.0	0.0	0.0	0.0
Average %O_2 by volume, dry basis	21.0	21.0	21.0	21.0
Isokinetic Variance	103.2	102.3	102.3	102.6
Filterable Particulate Matter (Method 5)				
grams collected	0.00761	0.09203	0.02784	0.04249
grains/acf	0.0033	0.0380	0.0112	0.0175
grains/dscf	0.0037	0.0421	0.0127	0.0195
lb/hr	1.119	13.654	4.131	6.301
Condensable Particulate Matter (Method 202)				
grams collected	0.00272	0.00259	0.00119	0.00217
grains/acf	0.0012	0.0011	0.0005	0.0009
grains/dscf	0.0013	0.0012	0.0005	0.0010
lb/hr	0.400	0.384	0.177	0.320
Total Particulate Matter (5/202)				
grams collected	0.01033	0.09462	0.02903	0.04466
grains/acf	0.0045	0.0391	0.0117	0.0184
grains/dscf	0.0050	0.0433	0.0132	0.0205
lb/hr	1.519	14.038	4.308	6.622

© Mostardi Platt

Client: Metal Management Midwest, Inc.
Facility: Paulina Street Facility
Test Location: Shredder Emissions
Test Method: 29

Source Condition		**Normal**		**Normal**		**Normal**		
Date		**9/20/19**		**9/20/19**		**9/20/19**		
Start Time		**8:58**		**11:30**		**13:45**		
End Time		**10:38**		**13:10**		**15:25**		
		Run 1		**Run 2**		**Run 3**		**Average**
Stack Conditions								
Average Gas Temperature, °F		80.3		84.8		83.5		82.9
Flue Gas Moisture, percent by volume		3.6%		4.1%		4.0%		3.9%
Average Flue Pressure, in. Hg		29.34		29.27		29.27		29.29
Gas Sample Volume, dscf		47.598		47.219		47.030		47.282
Average Gas Velocity, ft/sec		55.101		55.319		55.105		55.175
Gas Volumetric Flow Rate, acfm		45,087		45,265		45,090		45,147
Gas Volumetric Flow Rate, dscfm		41,656		41,153		41,134		41,314
Gas Volumetric Flow Rate, scfm		43,211		42,912		42,848		42,990
Average %CO_2 by volume, dry basis		0.0		0.0		0.0		0.0
Average %O_2 by volume, dry basis		21.0		21.0		21.0		21.0
Isokinetic Variance		103.0		103.5		103.1		103.2
Antimony (Sb) Emissions								
ug of sample collected	≤	8.20	≤	4.90	≤	3.40	≤	5.50
ppb	≤	1.20	≤	0.72	≤	0.50	≤	0.81
ug/dscm	≤	6.08	≤	3.66	≤	2.55	≤	4.10
lb/hr	≤	9.49E-04	≤	5.65E-04	≤	3.93E-04	≤	6.36E-04
Arsenic (As) Emissions								
ug of sample collected	≤	1.39	≤	1.45	≤	12.00	≤	4.95
ppb	≤	0.33	≤	0.35	≤	2.89	≤	1.19
ug/dscm	≤	1.03	≤	1.08	≤	9.01	≤	3.71
lb/hr	≤	1.61E-04	≤	1.67E-04	≤	1.39E-03	≤	5.72E-04
Barium (Ba) Emissions								
ug of sample collected		122.75		79.62		41.22		81.20
ppb		15.94		10.42		5.42		10.59
ug/dscm		91.07		59.55		30.95		60.52
lb/hr		1.42E-02		9.18E-03		4.77E-03		9.39E-03
Beryllium (Be) Emissions								
ug of sample collected	≤	0.27	≤	0.27	≤	0.27	≤	0.27
ppb	≤	0.53	≤	0.54	≤	0.54	≤	0.54
ug/dscm	≤	0.20	≤	0.20	≤	0.20	≤	0.20
lb/hr	≤	3.10E-05	≤	3.10E-05	≤	3.10E-05	≤	3.10E-05
Cadmium (Cd) Emissions								
ug of sample collected		2.24	≤	2.10	≤	1.53	≤	1.96
ppb		0.36	≤	0.34	≤	0.25	≤	0.31
ug/dscm		1.66	≤	1.57	≤	1.15	≤	1.46
lb/hr		2.59E-04	≤	2.42E-04	≤	1.77E-04	≤	2.26E-04

© Mostardi Platt

Client: Metal Management Midwest, Inc.
Facility: Paulina Street Facility
Test Location: Shredder Emissions
Test Method: 29

Source Condition		**Normal**		**Normal**		**Normal**		
Date		**9/20/19**		**9/20/19**		**9/20/19**		
Start Time		**8:58**		**11:30**		**13:45**		
End Time		**10:38**		**13:10**		**15:25**		
		Run 1		**Run 2**		**Run 3**		**Average**
Stack Conditions								
Average Gas Temperature, °F		80.3		84.8		83.5		82.9
Flue Gas Moisture, percent by volume		3.6%		4.1%		4.0%		3.9%
Average Flue Pressure, in. Hg		29.34		29.27		29.27		29.29
Gas Sample Volume, dscf		47.598		47.219		47.030		47.282
Average Gas Velocity, ft/sec		55.101		55.319		55.105		55.175
Gas Volumetric Flow Rate, acfm		45,087		45,265		45,090		45,147
Gas Volumetric Flow Rate, dscfm		41,656		41,153		41,134		41,314
Gas Volumetric Flow Rate, scfm		43,211		42,912		42,848		42,990
Average %CO_2 by volume, dry basis		0.0		0.0		0.0		0.0
Average %O_2 by volume, dry basis		21.0		21.0		21.0		21.0
Isokinetic Variance		103.0		103.5		103.1		103.2
Chromium (Cr) Emissions								
ug of sample collected		18.80		13.60		16.10		16.17
ppb		6.45		4.70		5.59		5.58
ug/dscm		13.95		10.17		12.09		12.07
lb/hr		2.20E-03		1.60E-03		1.90E-03		1.90E-03
Cobalt (Co) Emissions								
ug of sample collected	≤	2.77	≤	2.69		1.62	≤	2.36
ppb	≤	0.84	≤	0.82		0.50	≤	0.72
ug/dscm	≤	2.06	≤	2.01		1.21	≤	1.76
lb/hr	≤	3.21E-04	≤	3.10E-04		1.87E-04	≤	2.73E-04
Copper (Cu) Emissions								
ug of sample collected		46.27		27.26		28.48		34.00
ppb		12.98		7.71		8.09		9.59
ug/dscm		34.33		20.39		21.39		25.37
lb/hr		5.40E-03		3.10E-03		3.30E-03		3.93E-03
Lead (Pb) Emissions								
ug of sample collected		67.78		105.00		43.37		72.05
ppb		5.83		9.11		3.78		6.24
ug/dscm		50.29		78.53		32.57		53.80
lb/hr		7.80E-03		1.21E-02		5.00E-03		8.30E-03
Manganese (Mn) Emissions								
ug of sample collected		60.95		59.18		37.07		52.40
ppb		19.78		19.36		12.18		17.11
ug/dscm		45.22		44.26		27.84		39.11
lb/hr		7.10E-03		6.80E-03		4.30E-03		6.07E-03
Mercury (Hg) Emissions								
ug of sample collected	≤	15.92	≤	5.26	≤	6.47	≤	9.22
ppb	≤	1.42	≤	0.47	≤	0.58	≤	0.82
ug/dscm	≤	11.81	≤	3.94	≤	4.86	≤	6.87
lb/hr	≤	1.84E-03	≤	6.07E-04	≤	7.49E-04	≤	1.07E-03

© Mostardi Platt

Client: Metal Management Midwest, Inc.
Facility: Paulina Street Facility
Test Location: Shredder Emissions
Test Method: 29

Source Condition	Normal	Normal	Normal	
Date	9/20/19	9/20/19	9/20/19	
Start Time	8:58	11:30	13:45	
End Time	10:38	13:10	15:25	
	Run 1	Run 2	Run 3	Average
Stack Conditions				
Average Gas Temperature, °F	80.3	84.8	83.5	82.9
Flue Gas Moisture, percent by volume	3.6%	4.1%	4.0%	3.9%
Average Flue Pressure, in. Hg	29.34	29.27	29.27	29.29
Gas Sample Volume, dscf	47.598	47.219	47.030	47.282
Average Gas Velocity, ft/sec	55.101	55.319	55.105	55.175
Gas Volumetric Flow Rate, acfm	45,087	45,265	45,090	45,147
Gas Volumetric Flow Rate, dscfm	41,656	41,153	41,134	41,314
Gas Volumetric Flow Rate, scfm	43,211	42,912	42,848	42,990
Average %CO_2 by volume, dry basis	0.0	0.0	0.0	0.0
Average %O_2 by volume, dry basis	21.0	21.0	21.0	21.0
Isokinetic Variance	103.0	103.5	103.1	103.2
Nickel (Ni) Emissions				
ug of sample collected	20.13	13.57	10.04	14.58
ppb	6.11	4.16	3.09	4.45
ug/dscm	14.94	10.15	7.54	10.88
lb/hr	2.30E-03	1.60E-03	1.20E-03	1.70E-03
Phosphorus (P) Emissions				
ug of sample collected	≤ 222.00	401.00	390.00	≤ 337.67
ppb	≤ 127.82	232.74	227.27	≤ 195.94
ug/dscm	≤ 164.71	299.90	292.85	≤ 252.49
lb/hr	≤ 2.57E-02	4.62E-02	4.51E-02	≤ 3.90E-02
Selenium (Se) Emissions				
ug of sample collected	≤ 3.00	≤ 3.00	≤ 3.00	≤ 3.00
ppb	≤ 0.68	≤ 0.68	≤ 0.69	≤ 0.68
ug/dscm	≤ 2.23	≤ 2.24	≤ 2.25	≤ 2.24
lb/hr	≤ 3.00E-04	≤ 3.00E-04	≤ 3.00E-04	≤ 3.00E-04
Silver (Ag) Emissions				
ug of sample collected	≤ 0.73	≤ 0.54	≤ 0.36	≤ 0.54
ppb	≤ 0.12	≤ 0.09	≤ 0.06	≤ 0.09
ug/dscm	≤ 0.54	≤ 0.40	≤ 0.27	≤ 0.40
lb/hr	≤ 8.45E-05	≤ 6.23E-05	≤ 4.16E-05	≤ 6.28E-05
Thallium (Tl) Emissions				
ug of sample collected	≤ 0.36	≤ 0.36	≤ 0.36	≤ 0.36
ppb	≤ 0.03	≤ 0.03	≤ 0.03	≤ 0.03
ug/dscm	≤ 0.27	≤ 0.27	≤ 0.27	≤ 0.27
lb/hr	≤ 4.17E-05	≤ 4.15E-05	≤ 4.16E-05	≤ 4.16E-05
Zinc (Zn) Emissions				
ug of sample collected	1,576.20	1,224.20	1,019.80	1,273.40
ppb	429.96	336.63	281.55	349.38
ug/dscm	1169.43	915.57	765.76	950.25
lb/hr	1.82E-01	1.41E-01	1.18E-01	1.47E-01

© Mostardi Platt

5.0 CERTIFICATION

MOSTARDI PLATT is pleased to have been of service to Metal Management Midwest, Inc. If you have any questions regarding this test report, please do not hesitate to contact us at 630-993-2100.

CERTIFICATION

As project manager, I hereby certify that this test report represents a true and accurate summary of emissions test results and the methodologies employed to obtain those results, and the test program was performed in accordance with the methods specified in this test report.

MOSTARDI PLATT

_____ Project Manager

Eric L. Ehlers

_____ Quality Assurance

Scott W. Banach

© Mostardi Platt

APPENDICES

© Mostardi Platt

Appendix A- Infeed, Shredder Amperage, Fan Amperage, and Water Usage Data

© Mostardi Platt

Emission Testing

Supplementary Data

Location	Metal Management Midwest, Inc. 2500 S. Paulina Street Chicago, IL 60608
Testing Date	September 20, 2019
Water Flow Rates	10,474 gallons of water was consumed over the course of the 3 tests.
Blower Motor Amperage	See attached (from Mostardi Platt)
Tonnage Consumed per test:	
Test #1	316.75 NT = 155.39 NT End of Life Vehicles/161.36 NT Sheet Iron
Test #2	311.41 NT = 148.48 NT End of Life Vehicles/161.93 NT Sheet Iron
Test #3	319.67 NT = 156.25 NT End of Life Vehicles/163.42 NT Sheet Iron
Shredder Motor Amperage	See below

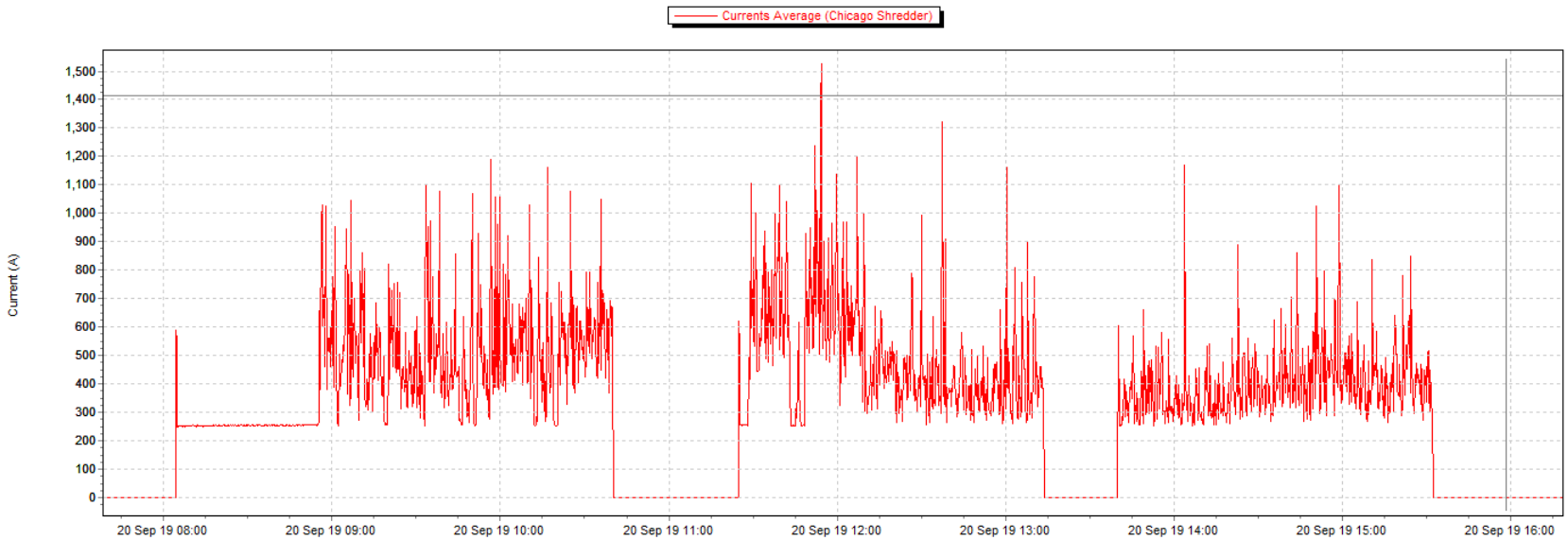

© Mostardi Platt

Shredder Motor Amperage Readings

9/20/19

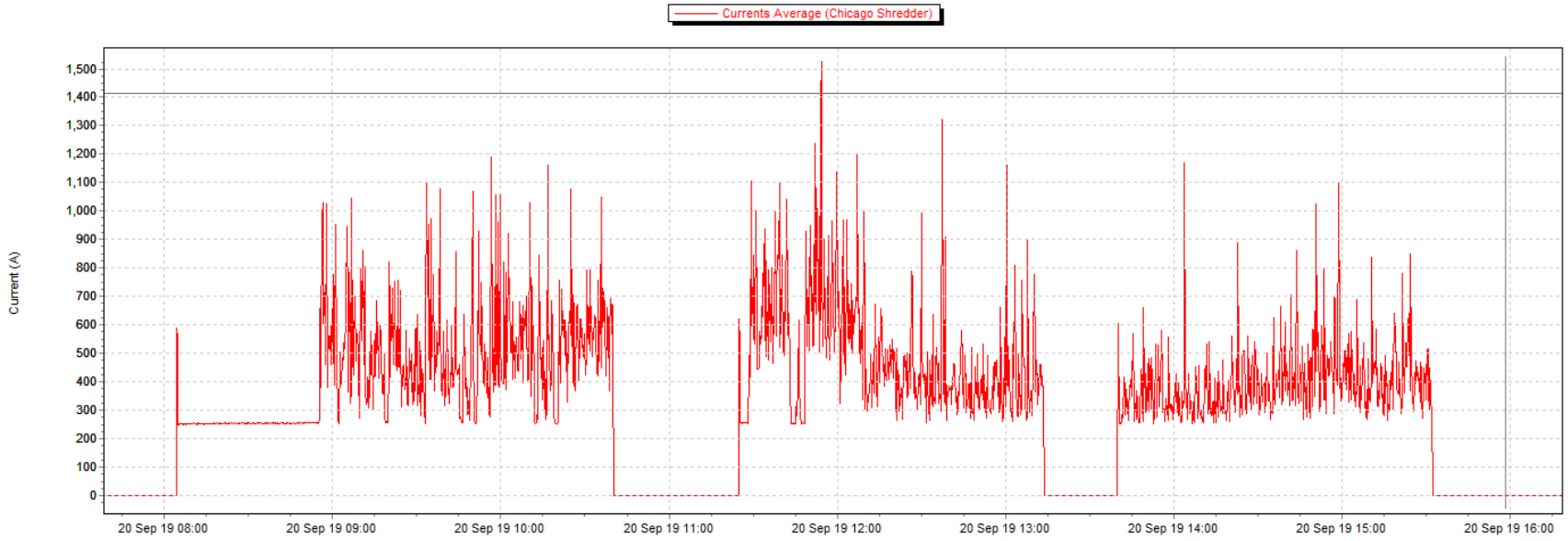

© Mostardi Platt

Shredder Emission Testing
2500 S. Paulina Street; Chicago, IL 60608

Test #1 - 9/20/19

End-of-Life Vehicles		
Ticket #	Weight	
	lbs	NT
THGVZA	39920	19.96
THHBBQ	24700	12.35
THHAVO	24640	12.32
THGZRE	42460	21.23
THGZJU	40040	20.02
THGYCB	22340	11.17
THHFJX	36080	18.04
THHFCD	41480	20.74
THHGDV	39120	19.56
		155.39

Sheet Iron		
Ticket #	Weight	
	lbs	NT
THGZKX	16620	8.31
THGWPS	16180	8.09
THGXII	40940	20.47
THGTCF	25280	12.64
THGTCJ	26800	13.4
THGXET	18500	9.25
THHBCD	20540	10.27
THHFCT	18840	9.42
THHDAN	20920	10.46
THHEJB	34220	17.11
THHEWT	20980	10.49
THHIMF	19180	9.59
THHIHB	27340	13.67
THHHFJ	16380	8.19
		161.36

Total 316.75 NT

© Mostardi Platt

Shredder Emission Testing
2500 S. Paulina Street; Chicago, IL 60608

Test #2 9/20/19

End-of-Life Vehicles		
Ticket #	Weight	
	lbs	NT
THEYST	23340	11.67
THETWE	41400	20.7
THEVQP	22460	11.23
THFKXA	34540	17.27
THFJGO	41500	20.75
THFIDY	45540	22.77
THFJIS	37780	18.89
THFKAW	24240	12.12
THEWZE	28160	14.08
		149.48

Sheet Iron		
Ticket #	Weight	
	lbs	NT
CHFKQG	27900	13.95
THFLLC	14920	7.46
THFNDG	20600	10.30
THFLHJ	16620	8.31
THFETR	26040	13.02
THFLHU	22900	11.45
THFEUL	28980	14.49
CHFFJT	27720	13.86
THFLBV	14160	7.08
THFSLZ	15920	7.96
THFRFY	23400	11.70
THFPXS	28200	14.10
THFPYJ	24100	12.05
CHFPJQ	34200	16.20
		161.93

Total 311.41 NT

© Mostardi Platt

Shredder Emission Testing
2500 S. Paulina Street; Chicago, IL 60608

Test #3 9/20/19

End-of-Life Vehicles		
Ticket #	Weight	
	lbs	NT
THDAZQ	41700	20.85
THDATV	40940	20.47
THCUAH	40380	20.19
THCVTQ	7420	3.71
THCVYX	36340	18.17
THCXMN	39600	19.8
THCXKV	41620	20.81
THCXVM	22520	11.26
THFHPD	32800	16.4
THFGQC	9180	4.59
		156.25

Sheet Iron		
Ticket #	Weight	
	lbs	NT
THDTPX	11300	5.65
THDWPJ	14800	7.40
THDTQL	8340	4.17
THEBBE	15460	7.73
THEASM	14600	7.30
THEADA	11040	5.52
THEBAB	29760	14.88
CHEDIG	20300	10.15
THEDAI	13680	6.84
THECRP	22660	11.33
THEDIQ	21940	10.97
THEDSU	21320	10.66
CHECVZ	15560	7.78
THEHNA	23140	11.57
THEHRK	19260	9.63
THEIFC	17720	8.86
THEIVX	22200	11.10
THEIDT	23760	11.88
		163.42

Total 319.67 NT

© Mostardi Platt

Project Number: M193411
Client: Metal Management Midwest, Inc.
Facility: Paulina Street Facility
Location: Shredder Emissions

Blower Motor Amperage

Run 1		Run 2		Run 3	
9/20/2019		9/20/2019		9/20/2019	
Time:	Amps:	Time:	Amps:	Time:	Amps:
08:58	88.20	11:30	93.60	13:45	91.92
09:02	88.00	11:34	89.22	13:49	90.55
09:06	87.80	11:38	87.48	13:53	89.43
09:10	87.87	11:42	85.42	13:57	89.22
09:14	88.80	11:46	86.52	14:01	89.27
09:18	87.45	11:50	86.55	14:05	88.24
09:22	86.78	11:54	86.41	14:09	88.53
09:26	86.85	11:58	86.12	14:13	88.12
09:30	86.47	12:02	85.00	14:17	87.48
09:34	87.05	12:06	82.22	14:21	87.52
09:38	85.49	12:10	83.37	14:25	88.38
09:42	81.43	12:14	84.14	14:29	88.25
09:50	82.98	12:22	82.00	14:37	85.37
09:54	82.02	12:26	82.44	14:41	88.97
09:58	82.06	12:30	81.04	14:45	89.22
10:02	81.28	12:34	80.33	14:49	89.18
10:06	80.73	12:38	80.12	14:53	86.52
10:10	81.55	12:42	80.12	14:57	84.49
10:14	84.40	12:46	80.15	15:01	83.66
10:18	85.44	12:50	80.17	15:05	82.69
10:22	84.85	12:54	80.25	15:09	82.75
10:26	84.85	12:58	78.14	15:13	84.35
10:30	83.34	13:02	78.44	15:17	86.22
10:34	84.25	13:06	78.58	15:21	83.17
Avg:	85.00	Avg:	83.24	Avg:	87.23

© Mostardi Platt

Appendix B- Test Section Diagrams

© Mostardi Platt

GASEOUS TRAVERSE FOR ROUND DUCTS

(TPM and Trace Metals Sampling)

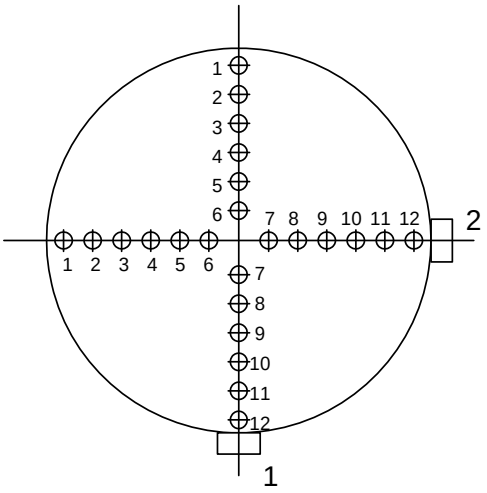

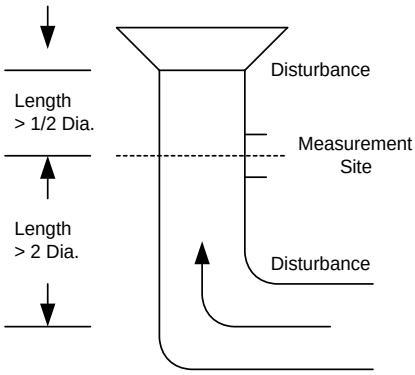

Project:	Metal Management Midwest, Inc. Paulina Street Facility
Date:	September 20, 2019
Unit:	Shredder Emissions
Duct Diameter:	4.167 Feet
Duct Area:	13.638 Square Feet
No. of Points :	24
No. of Ports:	2

© Mostardi Platt

GASEOUS TRAVERSE FOR ROUND DUCTS

(VOC Sampling)

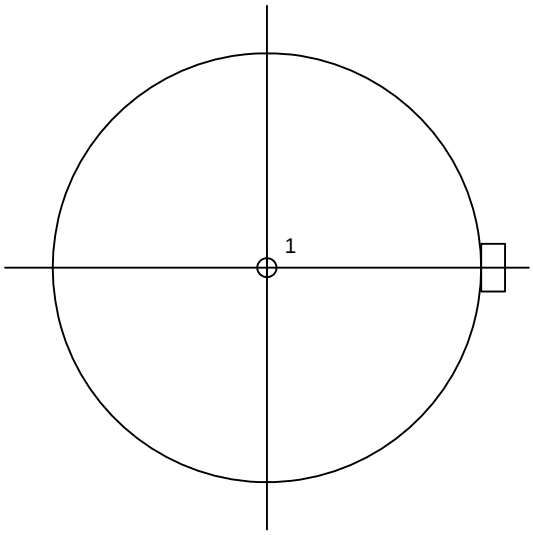

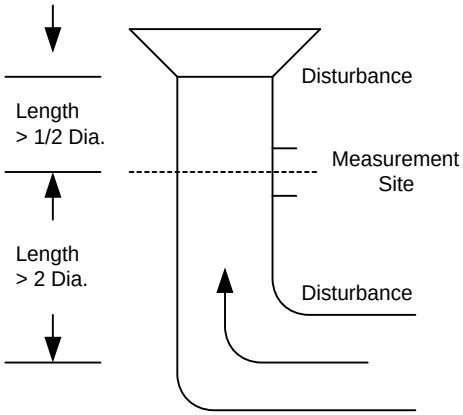

Project:	Metal Management Midwest, Inc. Paulina Street Facility
Date:	September 20, 2019
Unit:	Shredder Emissions
Duct Diameter:	4.167 Feet
Duct Area:	13.638 Square Feet
No. of Points :	1
No. of Ports:	1

© Mostardi Platt

Appendix C - Sample Train Diagrams

© Mostardi Platt

USEPA Method 2- Type S Pitot Tube Manometer Assembly

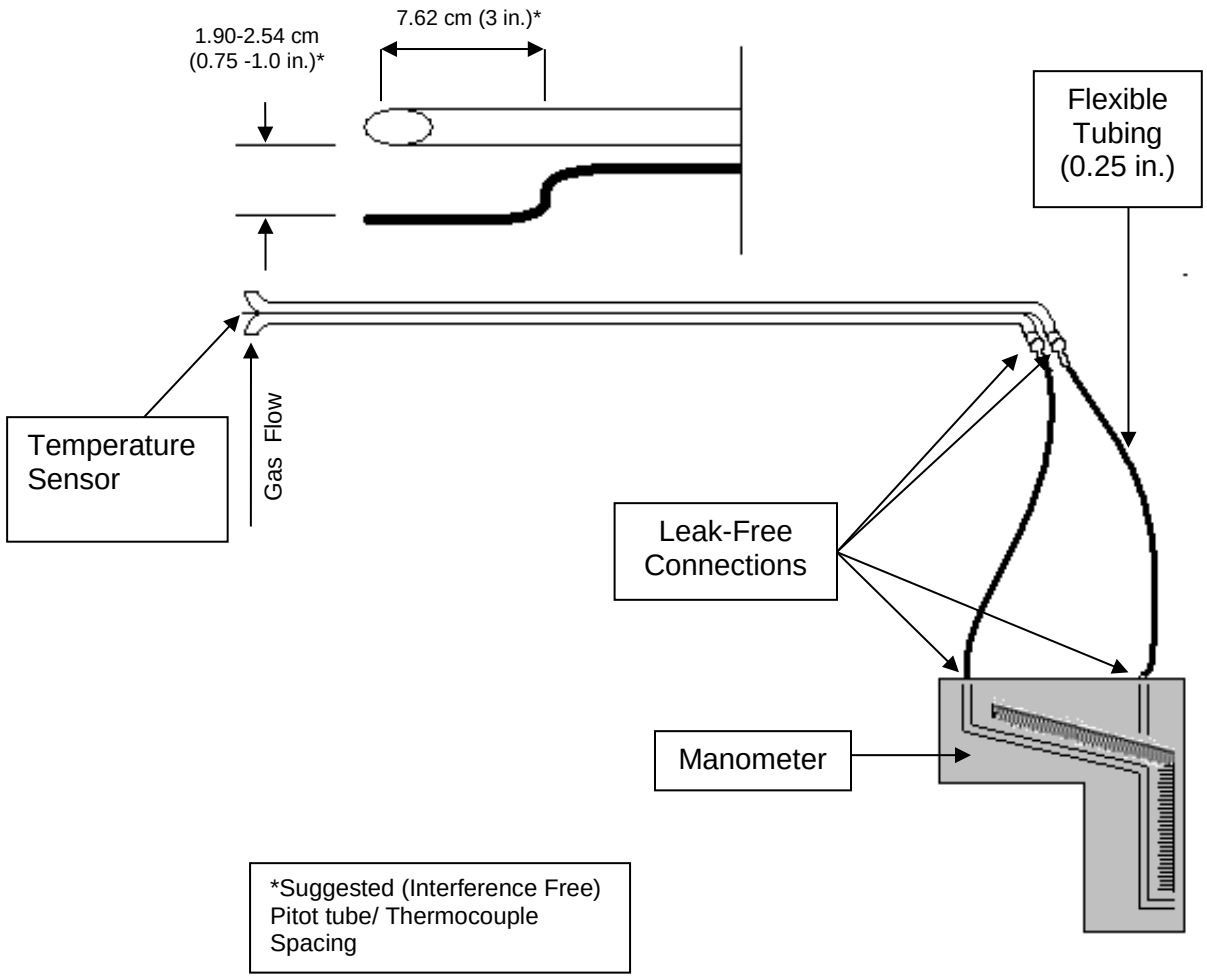

© Mostardi Platt

USEPA Method 3 - Integrated Oxygen/Carbon Dioxide Sample Train Diagram Utilizing Fyrite Gas Analyzer

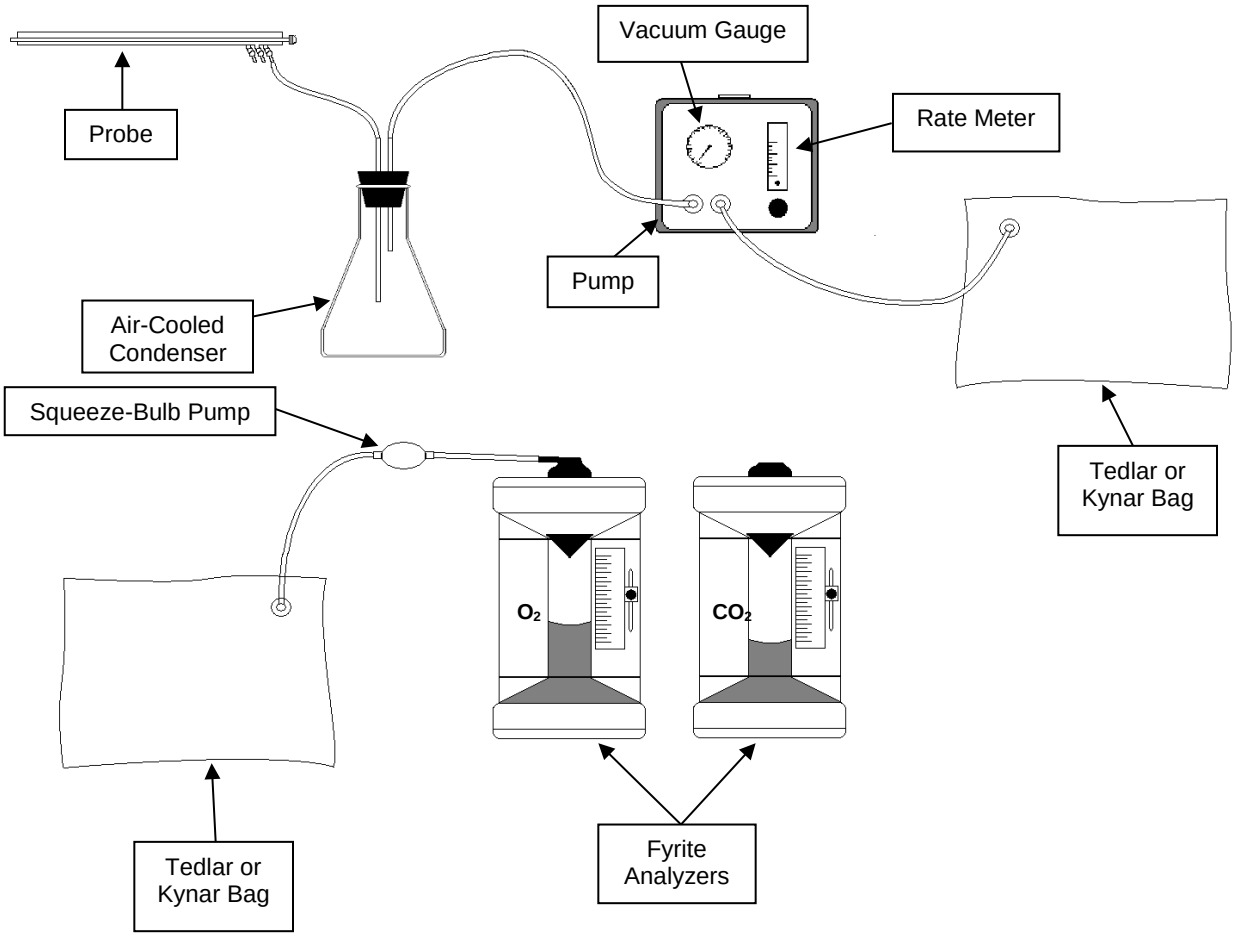

© Mostardi Platt

USEPA Method 5/202- Condensable Particulate Matter

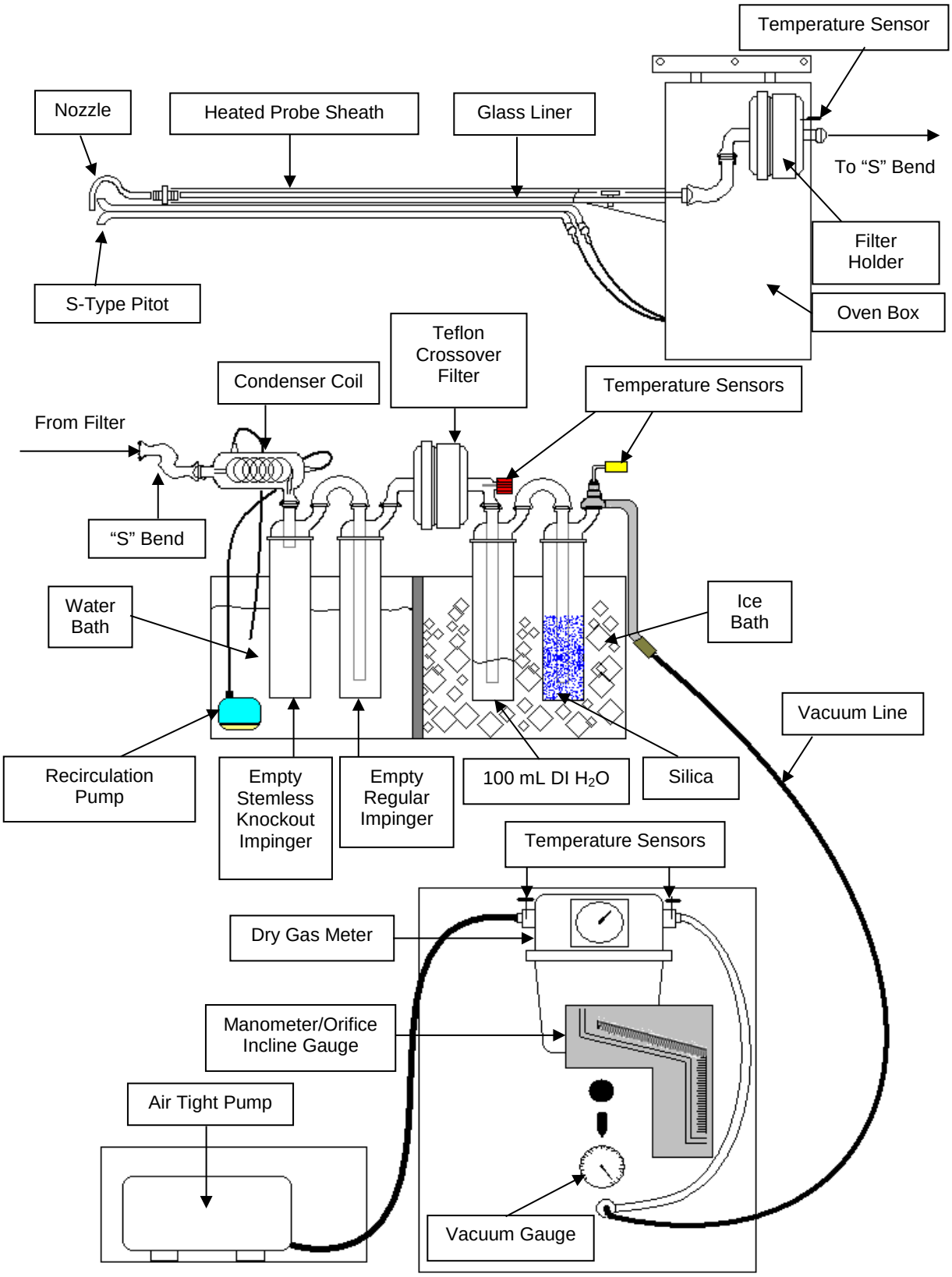

© Mostardi Platt

USEPA Method 29- Metals Sample Train Diagram (with Hg)

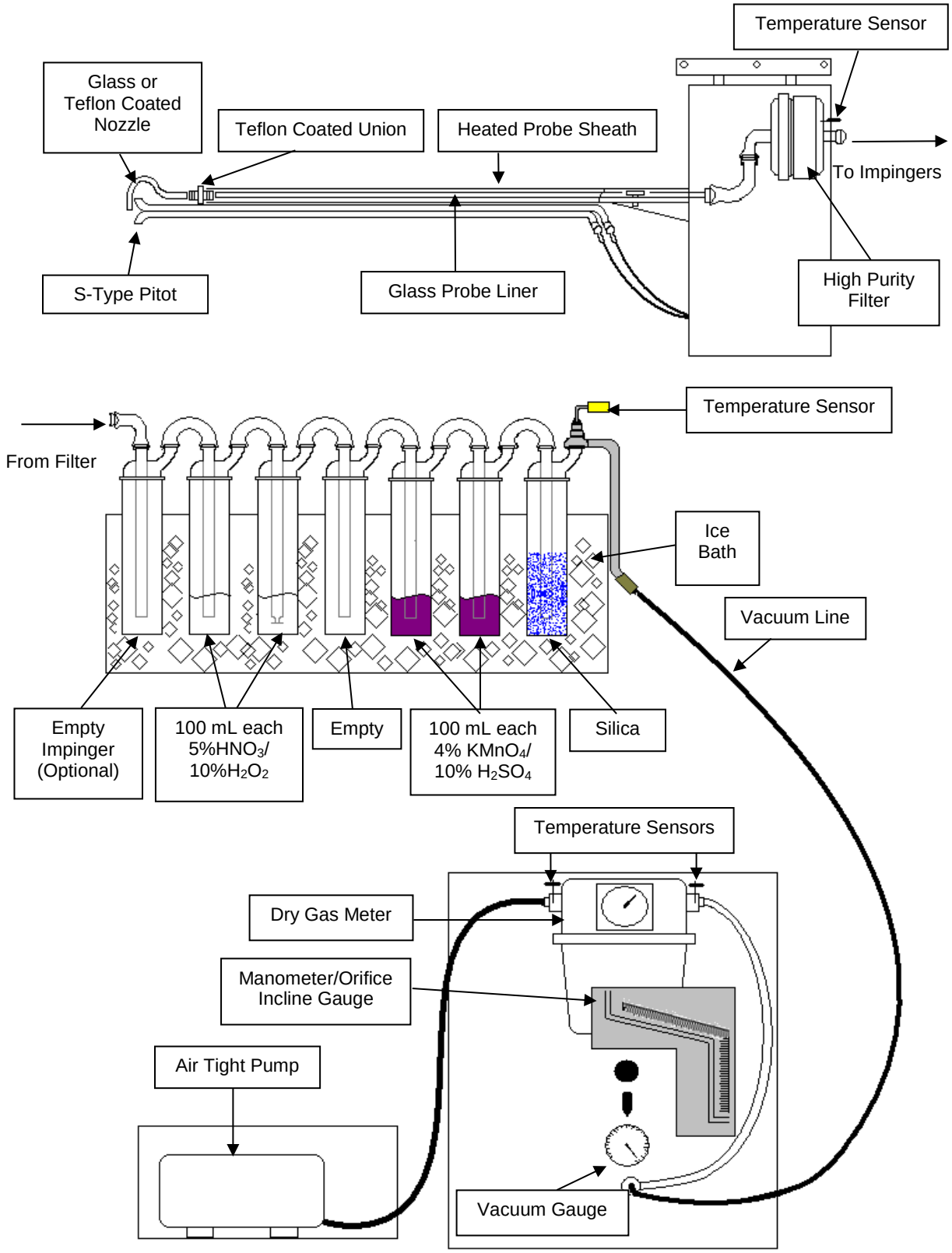

© Mostardi Platt

USEPA Method 25A – Total Gaseous Organic Compound Sample Train

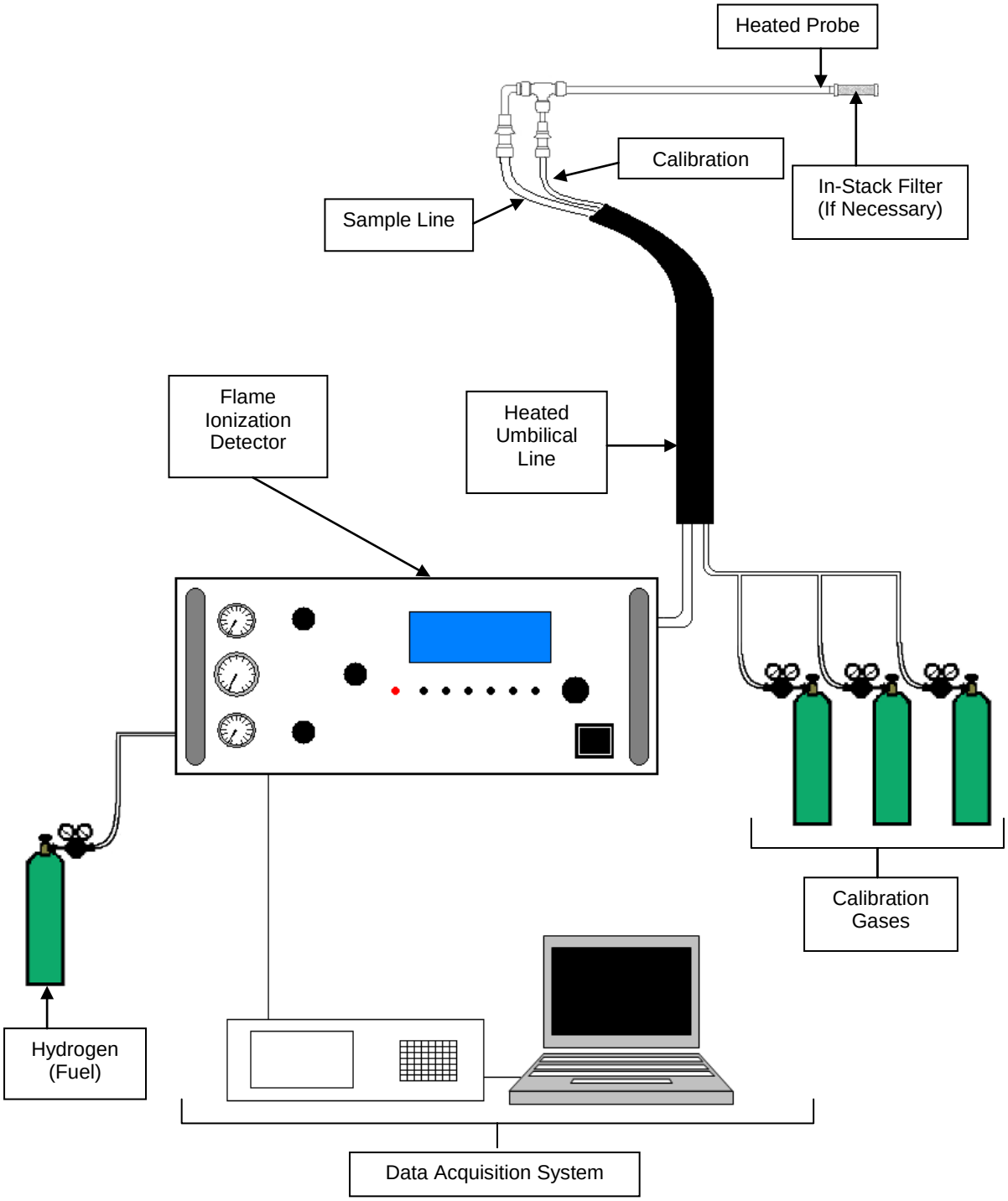

© Mostardi Platt

USEPA Method 320 – Vapor Phase Organic and Inorganic Emissions by Extractive Fourier Transform Infrared (FTIR) Spectroscopy Sample Train Diagram

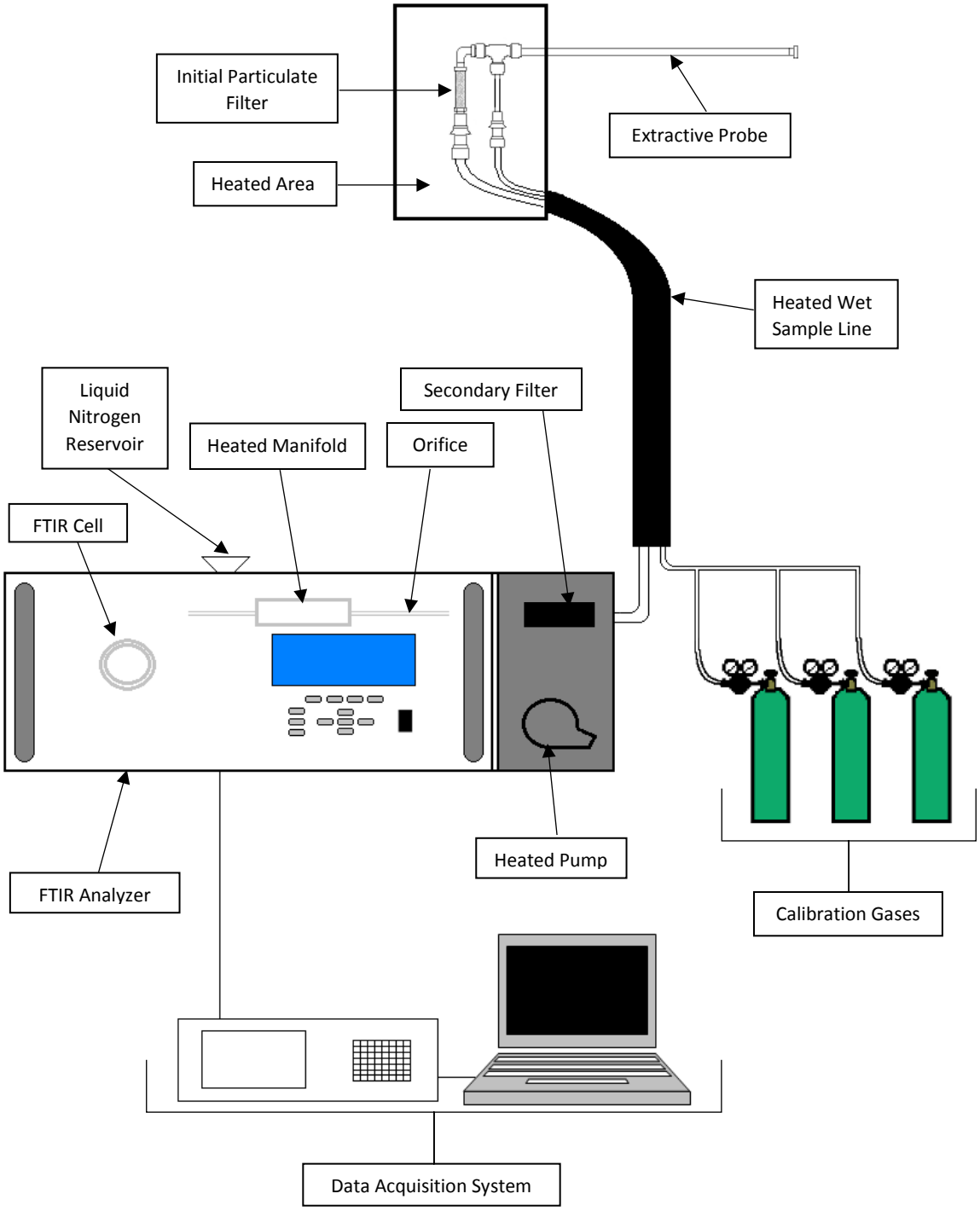

© Mostardi Platt

Appendix D- Calculation Nomenclature and Formulas

© Mostardi Platt

Client:	**Metal Management Midwest, Inc.**
Facility:	**Paulina Street Facility**
Test Location:	**Shredder Emissions**
Run:	**1**
Date:	**9/20/2019**
Method:	**5/202**
Source Condition:	**Normal**

Dry Molecular Weight

$$Md = 0.44 \times (\%CO_2) + 0.32 \times (\%O_2) + 0.28 \times \%N_2$$

$\%CO_2$ = 0.0 $\%O_2$ = 21.0 $\%N_2$ = 79.0

Md = 28.840

Wet Molecular Weight

$$Ms = Md \times (1-Bws) + (18.0 \times Bws)$$

Md = 28.840 Bws = 0.067

Ms = 28.341

Meter Volume at Standard Conditions

$$Vm(std) = 17.647 \times Y \times Vm \times \frac{(Pbar + DH/13.6)}{Tm}$$

Y = 0.998 Vm = 33.219 Pbar = 29.52

DH = 0.69 Tm = 548.2

Vm(std) = 31.557

Volume of Water Vapor Condensed

$$Vw(std) = 0.0471 \times (\text{net } H_2O \text{ gain})$$

Net H_2O = 48.0

Vw(std) = 2.261

Moisture Content

$$Bws = \frac{Vw(std)}{Vw(std) + Vm(std)}$$

Vw(std) = 2.261 Vm(std) = 31.557

Bws = 0.067

© Mostardi Platt

Client:	**Metal Management Midwest, Inc.**
Facility:	**Paulina Street Facility**
Test Location:	**Shredder Emissions**
Run:	**1**
Date:	**9/20/2019**
Method:	**5/202**
Source Condition:	**Normal**

Average Duct Velocity

$$Vs = 85.49 \times Cp \times \text{Sqrt DP (avg)} \times (Ts\ (avg) + 460/\ (Ps \times Ms))^{1/2}$$

Cp = 0.840 Ts (avg) = 88.4 Sqrt DP (avg): 0.817
Ps = 29.30 Ms = 28.341

Vs = 47.683

Volumetric Flow Rate (Actual Basis)

Q = Vs x A x 60

Vs = 47.683 A = 13.638

Q = 39,017

Volumetric Flow Rate (Standard Basis)

$$Qstd = 17.647 \times Q \times \frac{Ps}{Ts\ (avg) + 460}$$

Q = 39,017 Ps = 29.30 Ts (avg) = 88.4

Qstd = 36,785

Volumetric Flow Rate (Standard Dry Basis)

Qstd(dry) = Qstd x (1-Bws)

Qstd = 36,785 Bws = 0.067

Qstd(dry) = 35,093

Isokinetic Variation:

$$\%ISO = \frac{0.0945 \times (Ts + 460) \times Vm(std)}{Vs \times \theta \times An \times Ps \times (1-Bws)}$$

Ts = 88.4 Vm(std) = 31.557 Vs = 47.683
An = 0.0001651 θ = 72 Ps = 29.30
Bws = 0.067

%ISO = 103.2

© Mostardi Platt

Client:	**Metal Management Midwest, Inc.**
Facility:	**Paulina Street Facility**
Test Location:	**Shredder Emissions**
Run:	**1**
Date:	**9/20/2019**
Method:	**5/202**
Source Condition:	**Normal**

PM Concentration:

This example represents the filterable fraction. For other fractions, use the obtained mn for that particulate fraction.

$$Co = \frac{m_n \times 15.43}{Vm(std)}$$

m_n (g) = 0.00761 Vm(std) = 31.557

Co = 0.0037 gr/dscf

PM Emission Rate:

$$\text{Emission Rate lb/hr} = \frac{Co}{7{,}000} \times Qstd(dry) \times 60$$

Co = 0.0037 Qstd(dry) = 35,093

Emission Rate lb/hr = 1.119 lb/hr

© Mostardi Platt

Client:	**Metal Management Midwest, Inc.**
Facility:	**Paulina Street Facility**
Test Location:	**Shredder Emissions**
Run:	**1**
Date:	**9/20/2019**
Method:	**29**
Source Condition:	**Normal**

Dry Molecular Weight

$$Md = 0.44 \times (\%CO_2) + 0.32 \times (\%O_2) + 0.28 \times \%N_2$$

$\%CO_2$ =	0.0	$\%O_2$ =	21.0	$\%N_2$ =	79.0

Md = 28.840

Wet Molecular Weight

$$Ms = Md \times (1-Bws) + (18.0 \times Bws)$$

Md =	28.840	Bws =	0.043

Ms = 28.450

Meter Volume at Standard Conditions

$$Vm(std) = 17.647 \times Y \times Vm \times \frac{(Pbar + DH/13.6)}{Tm}$$

Y =	0.988	Vm =	50.008	Pbar =	29.5
DH =	0.8	Tm =	541.3		

Vm(std) = 47.598

Volume of Water Vapor Condensed

$$Vw(std) = 0.0471 \times (\text{net } H_2O \text{ gain})$$

Net H_2O = 45.1

Vw(std) = 2.124

Moisture Content

$$Bws = \frac{Vw(std)}{Vw(std) + Vm(std)}$$

Vw(std) =	2.124	Vm(std) =	47.598

Bws = 0.043

Average Duct Velocity

$$Vs = 85.49 \times Cp \times \text{Sqrt DP (avg)} \times (Ts\ (avg) + 460/(Ps \times Ms))^{1/2}$$

Cp =	0.840	Ts (avg) =	80.3	Sqrt DP (avg):	0.954
Ps =	29.34	Ms =	28.450		

Vs = 55.101

© Mostardi Platt

Client:	**Metal Management Midwest, Inc.**
Facility:	**Paulina Street Facility**
Test Location:	**Shredder Emissions**
Run:	**1**
Date:	**9/20/2019**
Method:	**29**
Source Condition:	**Normal**

Dry Molecular Weight

$$Md = 0.44 \times (\%CO_2) + 0.32 \times (\%O_2) + 0.28 \times \%N_2$$

$\%CO_2$ =	0.0	$\%O_2$ =	21.0	$\%N_2$ =	79.0

Md = 28.840

Wet Molecular Weight

$$Ms = Md \times (1-Bws) + (18.0 \times Bws)$$

Md =	28.840	Bws =	0.043

Ms = 28.450

Meter Volume at Standard Conditions

$$Vm(std) = 17.647 \times Y \times Vm \times \frac{(Pbar + DH/13.6)}{Tm}$$

Y =	0.988	Vm =	50.008	Pbar =	29.5
DH =	0.8	Tm =	541.3		

Vm(std) = 47.598

Volume of Water Vapor Condensed

$$Vw(std) = 0.0471 \times (\text{net } H_2O \text{ gain})$$

Net H_2O = 45.1

Vw(std) = 2.124

Moisture Content

$$Bws = \frac{Vw(std)}{Vw(std) + Vm(std)}$$

Vw(std) =	2.124	Vm(std) =	47.598

Bws = 0.043

Average Duct Velocity

$$Vs = 85.49 \times Cp \times \text{Sqrt DP (avg)} \times (Ts\ (avg) + 460/\ (Ps \times Ms))^{1/2}$$

Cp =	0.840	Ts (avg) =	80.3	Sqrt DP (avg):	0.954
Ps =	29.34	Ms =	28.450		

Vs = 55.101

© Mostardi Platt

Client:	**Metal Management Midwest, Inc.**
Facility:	**Paulina Street Facility**
Test Location:	**Shredder Emissions**
Run:	**1**
Date:	**9/20/2019**
Method:	**29**
Source Condition:	**Normal**

Volumetric Flow Rate (Actual Basis)

$$Q = Vs \times A \times 60$$

Vs = 55.101 A = 13.638

Q = 45,087

Volumetric Flow Rate (Standard Basis)

$$Qstd = 17.647 \times Q \times \frac{Ps}{Ts\ (avg) + 460}$$

Q = 45,087 Ps = 29.34 Ts (avg) = 80.3

Qstd = 43,211

Volumetric Flow Rate (Standard Dry Basis)

$$Qstd(dry) = Qstd \times (1-Bws)$$

Qstd = 43,211 Bws = 0.043

Qstd(dry) = 41,656

Isokinetic Variation:

$$\%ISO = \frac{0.0945 \times (Ts + 460) \times Vm(std)}{Vs \times \theta \times An \times Ps \times (1-Bws)}$$

Ts =	80.3	Vm(std) =	47.598	Vs =	55.101
An =	0.0001576	θ =	96	Ps =	29.34
Bws =	0.043				

%ISO = 103.0

© Mostardi Platt

Client:	**Metal Management Midwest, Inc.**
Facility:	**Paulina Street Facility**
Test Location:	**Shredder Emissions**
Run:	**1**
Date:	**9/20/2019**
Method:	**29**
Source Condition:	**Normal**

Antimony (Sb) Concentration:

$$\mu g/m^3 = \frac{\mu g \text{ of Antimony (Sb)}}{Vm(std) \times 0.02832\ m^3/ft^3}$$

µg= 8.20 **Vm(std) =** 47.598

µg/m³= 6.08

Antimony (Sb) Emission Rate:

$$\text{lb of Antimony (Sb)} = \frac{\mu g \text{ of sample} \times 10^{-6} \text{ grams}/\mu g}{453.6 \text{ grams/lb}}$$

lb of Antimony (Sb) = 1.81E-08 **dscfm =** 41,656

$$\text{Emission Rate lb/hr} = \frac{\text{lb of Antimony (Sb)}}{Vm(std)} \times dscfm \times 60 \text{ min/hr}$$

Emission Rate lb/hr = 0.001

© Mostardi Platt

MOSTARDI PLATT

Isokinetic Nomenclature

A = Cross-sectional area of stack or duct, square feet
A_n = Cross-sectional area of nozzle, square feet
B_{ws} = Water vapor in gas stream, by volume
C_a = Acetone blank residue concentration, g/g
C_{acf} = Concentration of particulate matter in gas stream at actual conditions, gr/acf
C_p = Pitot tube coefficient
C_s = Concentration of particulate matter in gas stream, dry basis, corrected to standard conditions, gr/dscf
IKV = Isokinetic sampling variance, must be 90.0 % ≤ IKV ≤ 110.0%
M_d = Dry molecular weight of gas, lb/lb-mole
M_s = Molecular weight of gas, wet basis, lb/lb-mole
M_w = Molecular weight of water, 18.0 lb/lb-mole
m_a = Mass of residue of acetone after evaporation, grams
P_{bar} = Barometric pressure at testing site, inches mercury
P_g = Static pressure of gas, inches mercury (inches water/13.6)
P_s = Absolute pressure of gas, inches mercury = $P_{bar} + P_g$
P_{std} = Standard absolute pressure, 29.92 inches mercury
Q_{acfm} = Actual volumetric gas flow rate, acfm
Q_{sd} = Dry volumetric gas flow rate corrected to standard conditions, dscfh
R = Ideal gas constant, 21.85 inches mercury cubic foot/°R-lb-mole
T_m = Dry gas meter temperature, °R
T_s = Gas temperature, °R
T_{std} = Absolute temperature, 528°R
V_a = Volume of acetone blank, ml
V_{aw} = Volume of acetone used in wash, ml
W_a = Weight of residue in acetone wash, grams
m_n = Total amount of particulate matter collected, grams
V_{1c} = Total volume of liquid collected in impingers and silica gel, ml
V_m = Volume of gas sample as measured by dry gas meter, dcf
$V_{m(std)}$ = Volume of gas sample measured by dry gas meter, corrected to standard conditions, dscf
v_s = Gas velocity, ft/sec
$V_{w(std)}$ = Volume of water vapor in gas sample, corrected to standard conditions, scf
Y = Dry gas meter calibration factor
ΔH = Average pressure differential across the orifice meter, inches water
Δp = Velocity head of gas, inches water
ρ_a = Density of acetone, 0.7855 g/ml (average)
ρ_w = Density of water, 0.002201 lb/ml
θ = Total sampling time, minutes
K_1 = 17.647 °R/in. Hg
K_2 = 0.04707 ft^3/ml
K_4 = 0.09450/100 = 0.000945
K_p = Pitot tube constant, $85.49 \frac{ft}{sec}\left[\frac{(lb/lb-mole)(in.\ Hg)}{(°R)(in.\ H_2O)}\right]^{1/2}$
%EA = Percent excess air
$\%CO_2$ = Percent carbon dioxide by volume, dry basis

$\%O_2$ = Percent oxygen by volume, dry basis
%CO = Percent carbon monoxide by volume, dry basis
$\%N_2$ = Percent nitrogen by volume, dry basis
0.264 = Ratio of O_2 to N_2 in air, v/v
28 = Molecular weight of N_2 or CO
32 = Molecular weight of O_2
44 = Molecular weight of CO_2
13.6 = Specific gravity of mercury (Hg)

© Mostardi Platt

MOSTARDI PLATT

Isokinetic Calculation Formulas

1. $V_{w(std)} = V_{lc}\left(\frac{\rho_w}{M_w}\right)\left(\frac{RT_{std}}{P_{std}}\right) = K_2 V_{lc}$

2. $V_{m(std)} = V_m Y \left(\frac{T_{std}}{T_m}\right)\left(\frac{(P_{bar} + (\frac{\Delta H}{13.6}))}{P_{std}}\right) = K_1\ V_m\ Y\ \frac{(P_{bar} + (\frac{\Delta H}{13.6}))}{T_m}$

3. $B_{ws} = \frac{V_{w(std)}}{(V_{m(std)} + V_{w(std)})}$

4. $M_d = 0.44(\%CO_2) + 0.32(\%O_2) + 0.28(\%N_2)$

5. $M_s = M_d(1 - B_{ws}) + 18.0(B_{ws})$

6. $C_a = \frac{m_a}{V_a \rho_a}$

7. $W_a = C_a V_{aw} \rho_a$

8. $C_{acf} = 15.43 K_i \left(\frac{m_n P_s}{V_{w(std)} + V_{m(std)}\ T_s}\right)$

9. $C_S = (15.43\ \text{grains/gram})\ (m_n / V_{m(std)})$

10. $v_s = K_p C_p \sqrt{\frac{\Delta P\ T_s}{P_s M_s}}$

11. $Q_{acfm} = v_s A(60_{sec/min})$

12. $Q_{sd} = (3600_{sec/hr})(1 - B_{ws})\ v_s \left(\frac{T_{std} P_s}{T_s P_{std}}\right) A$

13. $E\ (\text{emission rate, lbs/hr}) = Q_{std}\left(C_s / 7000\ \text{grains/lb}\right)$

14. $IKV = \frac{T_s V_{m(std)} P_{std}}{T_{std} v_s \theta A_n P_s 60(1 - B_{ws})} = K_4 \frac{T_s V_{m(std)}}{P_s v_s A_n \theta (1 - B_{ws})}$

15. $\%EA = \left(\frac{\%O_2 - (0.5\ \%CO)}{0.264\ \%N_2 - (\%O_2 - 0.5\ \%CO)}\right) \times 100$

© Mostardi Platt

MOSTARDI PLATT

Trace Metal (Including Mercury) Sample Calculations

Concentration

$$\frac{\mu g}{m^3} = \frac{\mu g\ of\ trace\ metal}{dscf\ volume\ sampled \times 0.02832 \frac{m^3}{ft^3}}$$

Emission Rate

$$\frac{\mu g\ of\ sample \times \frac{1 \times 10^{-6} grams}{\mu g}}{453.6\ gr/lb} = lbs\ of\ trace\ metal$$

$$\frac{lbs\ of\ trace\ metal}{V_m(std)sample} \times dscfm \times 60 \frac{min}{hr} = lbs\ of\ trace\ metal/hr$$

© Mostardi Platt

MOSTARDI PLATT

Volumetric Flow Nomenclature

A =	Cross-sectional area of stack or duct, ft2
Bws =	Water vapor in gas stream, proportion by volume
Cp =	Pitot tube coefficient, dimensionless
Md =	Dry molecular weight of gas, lb/lb-mole
Ms =	Molecular weight of gas, wet basis, lb/lb-mole
Mw =	Molecular weight of water, 18.0 lb/lb-mole
Pbar =	Barometric pressure at testing site, in. Hg
Pg =	Static pressure of gas, in. Hg (in. H2O/13.6)
DH=	Static pressure of gas, in.H2O
Ps =	Absolute pressure of gas, in. Hg = Pbar + Pg
Pstd =	Standard absolute pressure, 29.92 in. Hg
Acfm =	Actual volumetric gas flow rate
Scfm=	Volumetric gas flow rate, corrected to standard conditions
Dscfm =	Standard volumetric flow rate, corrected to dry conditions
R =	Ideal gas constant, 21.85 in. Hg-ft3/°R-lb-mole
Ts =	Average stack gas temperature, °F
Tm =	Average dry gas meter temperature, oF
Tstd =	Standard absolute temperature, 528°R
vs =	Gas velocity, ft/sec
Vm(std)=	Volume of gas sampled, corrected to standard conditions, scf
Vw(std) =	Volume of water vapor in gas sample, corrected to standard conditions, scf
Vlc=	Volume of liquid collected
Y =	Dry gas meter calibration factor
Δp =	Velocity head of gas, in. H2O
K1 =	17.647 °R/in. Hg
%EA =	Percent excess air
%CO2 =	Percent carbon dioxide by volume, dry basis
%O2 =	Percent oxygen by volume, dry basis
%N2 =	Percent nitrogen by volume, dry basis
0.264 =	Ratio of O2 to N2 in air, v/v
0.28 =	Molecular weight of N2 or CO, divided by 100
0.32 =	Molecular weight of O2 divided by 100
0.44 =	Molecular weight of CO2 divided by 100
13.6 =	Specific gravity of mercury (Hg)

© Mostardi Platt

MOSTARDI PLATT

Volumetric Air Flow Calculations

$$Vm\ (std) = 17.647 \times Vm \times \left[\frac{\left(P_{bar} + \left[\frac{DH}{13.6}\right]\right)}{(460 + Tm)}\right] \times Y$$

$$Vw\ (std) = 0.0471 \times Vlc$$

$$Bws = \left[\frac{Vw\ (std)}{Vw\ (std) + Vm\ (std)}\right]$$

$$Md = (0.44 \times \%CO_2) + (0.32 \times \%O_2) + [0.28 \times (100 - \%CO_2 - \%O_2)]$$

$$Ms = Md \times (1 - Bws) + (18 \times Bws)$$

$$Vs = \sqrt{\frac{(Ts + 460)}{Ms \times Ps}} \times \sqrt{DP} \times Cp \times 85.49$$

$$Acfm = Vs \times Area\ (of\ stack\ or\ duct) \times 60$$

$$Scfm = Acfm \times 17.647 \times \left[\frac{Ps}{(460 + Ts)}\right]$$

$$Scfh = Scfm \times 60 \frac{min}{hr}$$

$$Dscfm = Scfm \times (1 - Bws)$$

© Mostardi Platt

MOSTARDI PLATT

Moisture Calculations

$$V_{wc(std)} = \frac{(V_f - V_i)\rho_w R T_{std}}{P_{std} M_w} = 0.04707(V_f - V_i)$$

$$V_{wsg(std)} = \frac{(W_f - W_i)\rho_w R T_{std}}{P_{std} M_w} = 0.04715(W_f - W_i)$$

$$V_{m(std)} = 17.64\, V_m Y \frac{P_{bar} + \frac{\Delta H}{13.6}}{T_m}$$

$$B_{ws} = \frac{V_{wc(std)} + V_{wsg(std)}}{V_{wc(std)} + V_{wsg(std)} + V_{m(std)}}$$

Where:

B_{ws} =	Water vapor in gas stream, proportion by volume
M_w =	Molecular weight of water, 18.015 lb/lb-mole
P_{bar} =	Barometric pressure at the testing site, in. Hg
P_{std} =	Standard absolute pressure, 29.92 in. Hg
R =	Ideal gas constant, 0.048137 (in. Hg)(ft^3)/(g-mole)(°R) = [21.8348(in. Hg)(ft^3)/(lb-mole)(°R)]/453.592 g-mole/lb-mole
T_m =	Absolute average dry gas meter temperature, °R
T_{std} =	Standard absolute temperature, 528 °R
V_f =	Final volume of condenser water, ml
V_i =	Initial volume of condenser water, ml
V_m =	Dry gas volume measured by dry gas meter, dcf
$V_{m(std)}$ =	Dry gas volume measured by dry gas meter, corrected to standard conditions, scf
$V_{wc(std)}$ =	Volume of condensed water vapor, corrected to standard conditions, scf
$V_{wsg(std)}$ =	Volume of water vapor collected in silica gel, corrected to standard conditions, scf
W_f =	Final weight of silica gel, g
W_i =	Initial weight of silica gel, g
Y =	Dry gas meter calibration factor
ΔH =	Average pressure exerted on dry gas meter outlet by gas sample bag, in. H_2O
ρ_w =	Density of water, 0.9982 g/ml
13.6 =	Specific gravity of mercury (Hg)
17.64 =	T_{std}/P_{std}
0.04707 =	ft^3/ml 0.04715 = ft^3/g

© Mostardi Platt

Appendix E- Laboratory Sample Analysis

© Mostardi Platt

mostardi platt

Chain-of-Custody Form	
Project Number: M193411	Date Results Required:
Client: Metal Management Midwest, Inc.	TAT Required:
Plant/Test Location: Shredder Emissions	Project Supervisor: EE

Sample Number	Sample Date	Sample Point Identification	# of Conts	Sub Lab	Analysis Required	Volume, mls
001	9/20/19	R1 Acetone PW and Filter	2		M5	
002	9/20/19	R1 DI/Ace/Hex Rinses and CPM Filter	3		M202	
003	9/20/19	R2 Acetone PW and Filter	2		M5	
004	9/20/19	R2 DI/Ace/Hex Rinses and CPM Filter	3		M202	
005	9/20/19	R3 Acetone PW and Filter	2		M5	
006	9/20/19	R3 DI/Ace/Hex Rinses and CPM Filter	3		M202	
007	9/20/19	DI, Ace/Hex Proof Blank	2		M202	
008	9/20/19	Acetone Reagent Blank	1		M5	
009	9/20/19	DI, Acetone/Hexane, CPM Filter Recovery Blank	3		M202	

Delivered to Lab by: Date/Time:	Received by: Date/Time:	Processed by: Date/Time:

Laboratory Notes:

© Mostardi Platt

mostardi platt

Chain-of-Custody Form	
Project Number: M193411	Date Results Required: 10/4/19
Client: Metal Management Midwest, Inc.	TAT Required**: Rush**
Plant/Test Location: Shredder Emissions	Project Supervisor: ELE

Sample Number	Sample Date	Sample Point Identification	# of Conts	Sub Lab	Analysis Required	Volume, mls
001	9/20/19	R1 0.1N HNO3 PW and Filter	2		M29*	
002	9/20/19	R1 HNO3/H2O2 Imps and Rinses	1		M29*	
003	9/20/19	R1 0.1N HNO3 Blank Imp, KMnO4 Imp, HCl Rinse	3		M29-Hg	
004	9/20/19	R2 0.1N HNO3 PW and Filter	2		M29*	
005	9/20/19	R2 HNO3/H2O2 Imps and Rinses	1		M29*	
006	9/20/19	R2 0.1N HNO3 Blank Imp, KMnO4 Imp, HCl Rinse	3		M29-Hg	
007	9/20/19	R3 0.1N HNO3 PW and Filter	2		M29*	
008	9/20/19	R3 HNO3/H2O2 Imps and Rinses	1		M29*	
009	9/20/19	R3 0.1N HNO3 Blank Imp, KMnO4 Imp, HCl Rinse	3		M29-Hg	
010	9/20/19	Filter Reagent Blanks	3		M29*	
011	9/20/19	0.1N HNO3 Reagent Blanks	1		M29*	
012	9/20/19	DI Water Reagent Blank	1		M29*	
013	9/20/19	HNO3/H2O2 Reagent Blank	1		M29*	
014	9/20/19	H2SO4/KMnO4 Reagent Blank	1		M29*	
015	9/20/19	HCl Reagent Blank	1		M29*	

Delivered to Lab by: Date/Time:	Received by: Date/Time:	Processed by: Date/Time:

Laboratory Notes: M29*- The trace metals are Antimony (Sb), Arsenic (As), Barium (Ba), Beryllium (Be), Cadmium (Cd), Chromium (Cr), Cobalt (Co), Copper (Cu), Lead (Pb), Manganese (Mn), Mercury (Hg), Nickel (Ni), Phosphorus (P), Selenium (Se), Silver (Ag), Thallium (Tl), and Zinc (Zn). Front and back half fractions will be rushed and analyzed separately.

© Mostardi Platt

Client:	**Metal Management Midwest, Inc.**		
Facility:	**Paulina Street Facility**		
Project Number:	**M193411**		
Test Location:	**Shredder Emissions**		
Test Method:	**5/202**	**Filter Drying Temp °F:**	**220**
Filterable Analysis Date:	**9/26/2019**	**Analyst:**	**JMG**
Condensable Analysis Date:	**9/27/2019**	**Analyst:**	**JMG**

Description	Sample Date	ID#	vol. (ml)	Initial Weight (grams)	Final Weight (grams)	Net Weight Gain (grams)
Filterable Particulate						
Test No. 1	9/20/2019					
Source Condition: Normal						
M5 Filter		13926		0.45002	0.45572	0.00570
Acetone Wash (M5 Pans)		15397	100 mL	5.13877	5.14069	0.00192
Acetone Blank						0.00001
Total Front Half Weight						**0.00761**
Condensable Particulate						
Acetone/Hexane Wash		1896	200 mL	20.47210	20.47474	0.00264
DI Wash		1900	181 mL	20.30929	20.31098	0.00169
NH_4OH Correction			0 mL			0.00000
Field Blank						0.00161
Total Back Half Weight						**0.00272**
Total Particulate Weight						**0.01033**
Filterable Particulate						
Test No. 2	9/20/2019					
Source Condition: Normal						
M5 Filter		13925		0.45043	0.53384	0.08341
Acetone Wash (M5 Pans)		15398	100 mL	5.11909	5.12772	0.00863
Acetone Blank						0.00001
Total Front Half Weight						**0.09203**
Condensable Particulate						
Acetone/Hexane Wash		1897	215 mL	20.48059	20.48382	0.00323
DI Wash		1901	209 mL	20.35385	20.35482	0.00097
NH_4OH Correction			0 mL			0.00000
Field Blank						0.00161
Total Back Half Weight						**0.00259**
Total Particulate Weight						**0.09462**
Filterable Particulate						
Test No. 3	9/20/2019					
Source Condition: Normal						
M5 Filter		13927		0.44822	0.47078	0.02256
Acetone Wash (M5 Pans)		15399	85 mL	5.10296	5.10825	0.00529
Acetone Blank						0.00001
Total Front Half Weight						**0.02784**
Condensable Particulate						
Acetone/Hexane Wash		1898	290 mL	20.34520	20.34709	0.00189
DI Wash		1902	271 mL	20.28512	20.28603	0.00091
NH_4OH Correction			0 mL			0.00000
Field Blank						0.00161
Total Back Half Weight						**0.00119**
Total Particulate Weight						**0.02903**
Field Train Blank Summary						
Acetone/Hexane Wash		1899	215 mL	20.42316	20.42356	0.00040
DI Wash		1903	100 mL	20.37320	20.37441	0.00121
NH_4OH Correction			0 mL			0.00000
Total Field Train Blank						0.00161
Field Proof Blank Summary						
Acetone/Hexane Wash		1933	100 mL	20.35520	20.35619	0.00099
DI Wash		1934	75 mL	20.37068	20.37305	0.00237
Normality of NH_4OH						0.0973
Reagent Blank Summary						
Acetone Wash (M5 Pans)		15400	100 mL	5.08521	5.08522	0.00001

© Mostardi Platt

Client:	**Metal Management Midwest, Inc.**			
Facility:	**Paulina Street Facility**			
Test Location:	**Shredder Emissions**			
Test Method:	**29**			
Source Condition:		**Normal Run 1**	**Normal Run 2**	**Normal Run 3**
Identify Analyte:	Antimony (Sb)			
Molecular Weight:	121.75	DLL	DLL	BDL
ug (net) collected:		8.2	4.9	3.4
Identify Analyte:	Arsenic (As)			
Molecular Weight:	74.92	DLL	DLL	BDL
ug (net) collected:		1.39	1.45	12
Identify Analyte:	Barium (Ba)			
Molecular Weight:	137.33	ADL	ADL	ADL
ug (net) collected:		122.75	79.62	41.22
Identify Analyte:	Beryllium (Be)			
Molecular Weight:	9.01	BDL	BDL	BDL
ug (net) collected:		0.27	0.27	0.27
Identify Analyte:	Cadmium (Cd)			
Molecular Weight:	112.4	ADL	DLL	DLL
ug (net) collected:		2.239	2.1	1.53
Identify Analyte:	Chromium (Cr)			
Molecular Weight:	51.99	ADL	ADL	ADL
ug (net) collected:		18.8	13.6	16.1
Identify Analyte:	Cobalt (Co)			
Molecular Weight:	58.93	DLL	DLL	ADL
ug (net) collected:		2.77	2.69	1.616
Identify Analyte:	Copper (Cu)			
Molecular Weight:	63.55	ADL	ADL	ADL
ug (net) collected:		46.27	27.26	28.48
Identify Analyte:	Lead (Pb)			
Molecular Weight:	207.19	ADL	ADL	ADL
ug (net) collected:		67.78	105	43.37
Identify Analyte:	Manganese (Mn)			
Molecular Weight:	54.94	ADL	ADL	ADL
ug (net) collected:		60.95	59.18	37.07
Identify Analyte:	Nickel (Ni)			
Molecular Weight:	58.71	ADL	ADL	ADL
ug (net) collected:		20.13	13.57	10.04

© Mostardi Platt

Client:	**Metal Management Midwest, Inc.**			
Facility:	**Paulina Street Facility**			
Test Location:	**Shredder Emissions**			
Test Method:	**29**			
Source Condition:		**Normal Run 1**	**Normal Run 2**	**Normal Run 3**
Identify Analyte:	Phosphorus (P)			
Molecular Weight:	30.97	DLL	ADL	ADL
ug (net) collected:		222	401	390
Identify Analyte:	Selenium (Se)			
Molecular Weight:	78.96	BDL	BDL	BDL
ug (net) collected:		3	3	3
Identify Analyte:	Silver (Ag)			
Molecular Weight:	107.87	DLL	DLL	BDL
ug (net) collected:		0.73	0.54	0.36
Identify Analyte:	Thallium (Tl)			
Molecular Weight:	204.38	BDL	BDL	BDL
ug (net) collected:		0.36	0.36	0.36
Identify Analyte:	Zinc (Zn)			
Molecular Weight:	65.37	ADL	ADL	ADL
ug (net) collected:		1576.2	1224.2	1019.8
Identify Analyte:	Mercury (Hg)			
Molecular Weight:	200.59	DLL	DLL	DLL
ug (net) collected:		15.9152	5.2627	6.472

© Mostardi Platt

Your Project #: M193411-05
Site Location: SIMS METAL MANAGEMENT

Attention: Data Reporting

Mostardi Platt
888 Industrial Rd
Elmhurst, IL
USA 60126-1121

Your C.O.C. #: 010-015, 001-003, 004-006, 007-009

Report Date: 2019/10/07
Report #: R5910543
Version: 2 - Final

CERTIFICATE OF ANALYSIS

BV LABS JOB #: B9R0442
Received: 2019/09/26, 16:45

Sample Matrix: Stack Sampling Train
Samples Received: 4

Analyses	Quantity	Date Extracted	Date Analyzed	Laboratory Method	Reference
Mercury 3C in HCl Rinse	4	2019/10/01	2019/10/04	BRL SOP-00104	EPA M29/M0060 m
Mercury 2B in HNO3/H2O2 Imp.	4	2019/09/30	2019/10/02	BRL SOP-00104	EPA M29/M0060 m
Mercury 3A in HNO3 Rinse	4	2019/10/01	2019/10/04	BRL SOP-00104	EPA M29/M0060 m
Mercury 3B in KMnO4/H2SO4 Imp.	4	2019/10/01	2019/10/02	BRL SOP-00104	EPA M29/M0060 m
Mercury 1B in Filter + Rinse (M29)	4	2019/09/30	2019/10/04	BRL SOP-00104	EPA 29 m
Metals B.H. in H2O2/HNO3 Imp.(6020B m)	4	2019/09/30	2019/10/01	BRL SOP-00103 / BRL SOP-00102	EPA M29/CARB 436 m
Metals F.H. in Filter + Rinses (6020B m)	4	2019/09/30	2019/10/04	BRL SOP-00103/ BRL SOP-00102	EPA M29/CARB 436 m

Remarks:

Bureau Veritas Laboratories are accredited to ISO/IEC 17025 for specific parameters on scopes of accreditation. Unless otherwise noted, procedures used by BV Labs are based upon recognized Provincial, Federal or US method compendia such as CCME, MELCC, EPA, APHA.

All work recorded herein has been done in accordance with procedures and practices ordinarily exercised by professionals in BV Labs profession using accepted testing methodologies, quality assurance and quality control procedures (except where otherwise agreed by the client and BV Labs in writing). All data is in statistical control and has met quality control and method performance criteria unless otherwise noted. All method blanks are reported; unless indicated otherwise, associated sample data are not blank corrected. Where applicable, unless otherwise noted, Measurement Uncertainty has not been accounted for when stating conformity to the referenced standard.

BV Labs liability is limited to the actual cost of the requested analyses, unless otherwise agreed in writing. There is no other warranty expressed or implied. BV Labs has been retained to provide analysis of samples provided by the Client using the testing methodology referenced in this report. Interpretation and use of test results are the sole responsibility of the Client and are not within the scope of services provided by BV Labs, unless otherwise agreed in writing. BV Labs is not responsible for the accuracy or any data impacts, that result from the information provided by the customer or their agent.

Solid sample results, except biota, are based on dry weight unless otherwise indicated. Organic analyses are not recovery corrected except for isotope dilution methods.
Results relate to samples tested. When sampling is not conducted by BV Labs, results relate to the supplied samples tested.
This Certificate shall not be reproduced except in full, without the written approval of the laboratory.
Reference Method suffix "m" indicates test methods incorporate validated modifications from specific reference methods to improve performance.
* RPDs calculated using raw data. The rounding of final results may result in the apparent difference.

Bureau Veritas Laboratories 6740 Campobello Road, Mississauga, Ontario, L5N 2L8 Tel: (905) 817-5700 Toll-Free: 800-563-6266 Fax: (905) 817-5777 www.bvlabs.com

Microbiology testing is conducted at 6660 Campobello Rd. Chemistry testing is conducted at 6740 Campobello Rd.

© Mostardi Platt

Your Project #: M193411-05
Site Location: SIMS METAL MANAGEMENT

Attention: Data Reporting

Mostardi Platt
888 Industrial Rd
Elmhurst, IL
USA 60126-1121

Your C.O.C. #: 010-015, 001-003, 004-006, 007-009

Report Date: 2019/10/07
Report #: R5910543
Version: 2 - Final

CERTIFICATE OF ANALYSIS

BV LABS JOB #: B9R0442
Received: 2019/09/26, 16:45

Encryption Key

AUTHORIZED REPORT
RAPPORT AUTORISÉ

Bureau Veritas Laboratories
07 Oct 2019 09:32:20

Please direct all questions regarding this Certificate of Analysis to your Project Manager.
Clayton Johnson, Project Manager - Air Toxics, Source Evaluation
Email: Clayton.Johnson@bvlabs.com
Phone# (905)817-5769

==========

BV Labs has procedures in place to guard against improper use of the electronic signature and have the required "signatories", as per ISO/IEC 17025, signing the reports. For Service Group specific validation please refer to the Validation Signature Page.

Bureau Veritas Laboratories 6740 Campobello Road, Mississauga, Ontario, L5N 2L8 Tel: (905) 817-5700 Toll-Free: 800-563-6266 Fax: (905) 817-5777 www.bvlabs.com

Microbiology testing is conducted at 6660 Campobello Rd. Chemistry testing is conducted at 6740 Campobello Rd.

© Mostardi Platt

BV Labs Job #: B9R0442
Report Date: 2019/10/07

Mostardi Platt
Client Project #: M193411-05
Site Location: SIMS METAL MANAGEMENT

EPA M29 METALS (FRONT & BACK SEPARATE)

BV Labs ID		KWS557	KWS559	KWS559	KWS560	KWS561		
Sampling Date		2019/09/20	2019/09/20	2019/09/20	2019/09/20	2019/09/20		
COC Number		010-015	001-003	001-003	004-006	007-009		
	UNITS	M29- BLANK	M29- R1	M29- R1 Lab-Dup	M29- R2	M29- R3	RDL	QC Batch
Front Half Antimony (Sb)	ug	<3.0	7.8	7.9	4.5	<3.0	3.0	6360423
Front Half Arsenic (As)	ug	<0.80	0.99	1.00	1.05	<0.80	0.80	6360423
Front Half Barium (Ba)	ug	6.3	123	122	78.5	39.4	1.2	6360423
Front Half Beryllium (Be)	ug	<0.18	<0.18	<0.18	<0.18	<0.18	0.18	6360423
Front Half Cadmium (Cd)	ug	<0.18	2.06	2.04	2.01	1.44	0.18	6360423
Front Half Chromium (Cr)	ug	<3.0	16.4	16.3	11.6	8.7	3.0	6360423
Front Half Cobalt (Co)	ug	<0.18	2.68	2.64	2.60	1.05	0.18	6360423
Front Half Copper (Cu)	ug	<1.8	45.4	44.9	23.8	25.3	1.8	6360423
Front Half Lead (Pb)	ug	<0.60	67.3	68.9	104	41.8	0.60	6360423
Front Half Manganese (Mn)	ug	<1.2	57.9	58.1	56.8	33.9	1.2	6360423
Front Half Nickel (Ni)	ug	2.5	20.4	20.6	14.7	9.3	1.0	6360423
Front Half Phosphorus (P)	ug	<90	177	178	352	331	90	6360423
Front Half Selenium (Se)	ug	<2.0	<2.0	<2.0	<2.0	<2.0	2.0	6360423
Front Half Silver (Ag)	ug	<0.24	0.61	0.63	0.42	<0.24	0.24	6360423
Front Half Thallium (Tl)	ug	<0.24	<0.24	<0.24	<0.24	<0.24	0.24	6360423
Front Half Zinc (Zn)	ug	<10	1570	1530	1210	995	10	6360423
Back Half Antimony (Sb)	ug	<0.40	<0.40	<0.40	<0.40	<0.40	0.40	6360441
Back Half Arsenic (As)	ug	<0.40	<0.40	<0.40	<0.40	<0.40	0.40	6360441
Back Half Barium (Ba)	ug	3.48	9.53	9.63	10.9	11.6	0.60	6360441
Back Half Beryllium (Be)	ug	<0.090	<0.090	<0.090	<0.090	<0.090	0.090	6360441
Back Half Cadmium (Cd)	ug	<0.090	0.179	0.202	<0.090	<0.090	0.090	6360441
Back Half Chromium (Cr)	ug	<1.5	2.4	2.4	2.0	7.4	1.5	6360441
Back Half Cobalt (Co)	ug	<0.090	<0.090	<0.090	<0.090	0.111	0.090	6360441
Back Half Copper (Cu)	ug	2.25	3.12	3.16	5.71	5.43	0.75	6360441
Back Half Lead (Pb)	ug	<0.30	0.48	0.47	1.00	1.57	0.30	6360441
Back Half Manganese (Mn)	ug	<0.60	3.05	3.18	2.38	3.17	0.60	6360441
Back Half Nickel (Ni)	ug	<0.50	2.23	2.29	1.37	3.24	0.50	6360441
Back Half Phosphorus (P)	ug	<45	<45	<45	49	59	45	6360441
Back Half Selenium (Se)	ug	<1.0	<1.0	<1.0	<1.0	<1.0	1.0	6360441
Back Half Silver (Ag)	ug	<0.12	<0.12	<0.12	<0.12	<0.12	0.12	6360441
Back Half Thallium (Tl)	ug	<0.12	<0.12	<0.12	<0.12	<0.12	0.12	6360441
Back Half Zinc (Zn)	ug	<5.0	6.2	6.3	14.2	24.8	5.0	6360441

RDL = Reportable Detection Limit
QC Batch = Quality Control Batch
Lab-Dup = Laboratory Initiated Duplicate

Bureau Veritas Laboratories 6740 Campobello Road, Mississauga, Ontario, L5N 2L8 Tel: (905) 817-5700 Toll-Free: 800-563-6266 Fax: (905) 817-5777 www.bvlabs.com

Microbiology testing is conducted at 6660 Campobello Rd. Chemistry testing is conducted at 6740 Campobello Rd.

© Mostardi Platt

BV Labs Job #: B9R0442
Report Date: 2019/10/07

Mostardi Platt
Client Project #: M193411-05
Site Location: SIMS METAL MANAGEMENT

EPA M29 MERCURY (STACK SAMPLING TRAIN)

BV Labs ID		KWS557		KWS559	KWS559		KWS560	KWS560		
Sampling Date		2019/09/20		2019/09/20	2019/09/20		2019/09/20	2019/09/20		
COC Number		010-015		001-003	001-003		004-006	004-006		
	UNITS	M29- BLANK	RDL	M29- R1	M29- R1 Lab-Dup	RDL	M29- R2	M29- R2 Lab-Dup	RDL	QC Batch
1B Mercury (Hg)	ug	<0.015	0.015	0.118	N/A	0.015	0.031	N/A	0.015	6360437
2B Mercury (Hg)	ug	<0.15	0.15	<0.13	<0.13	0.13	<0.15	N/A	0.15	6361739
3A Mercury (Hg)	ug	<0.005	0.005	0.0072	N/A	0.0036	<0.0017	N/A	0.0017	6362483
3B Mercury (Hg)	ug	<0.02	0.02	0.160	N/A	0.023	0.19	0.19	0.02	6361741
3C Mercury (Hg)	ug	<0.013	0.013	15.5	16.2	0.13	4.89	N/A	0.063	6362584

RDL = Reportable Detection Limit
QC Batch = Quality Control Batch
Lab-Dup = Laboratory Initiated Duplicate
N/A = Not Applicable

BV Labs ID		KWS561	KWS561		
Sampling Date		2019/09/20	2019/09/20		
COC Number		007-009	007-009		
	UNITS	M29- R3	M29- R3 Lab-Dup	RDL	QC Batch
1B Mercury (Hg)	ug	0.027	0.029	0.015	6360437
2B Mercury (Hg)	ug	<0.2	N/A	0.2	6361739
3A Mercury (Hg)	ug	0.005	0.005	0.004	6362483
3B Mercury (Hg)	ug	1.17	N/A	0.02	6361741
3C Mercury (Hg)	ug	5.07	N/A	0.075	6362584

RDL = Reportable Detection Limit
QC Batch = Quality Control Batch
Lab-Dup = Laboratory Initiated Duplicate
N/A = Not Applicable

Bureau Veritas Laboratories 6740 Campobello Road, Mississauga, Ontario, L5N 2L8 Tel: (905) 817-5700 Toll-Free: 800-563-6266 Fax: (905) 817-5777 www.bvlabs.com

© Mostardi Platt

BV Labs Job #: B9R0442
Report Date: 2019/10/07

Mostardi Platt
Client Project #: M193411-05
Site Location: SIMS METAL MANAGEMENT

TEST SUMMARY

BV Labs ID: KWS557
Sample ID: M29- BLANK
Matrix: Stack Sampling Train

Collected: 2019/09/20
Shipped:
Received: 2019/09/26

Test Description	Instrumentation	Batch	Extracted	Date Analyzed	Analyst
Mercury 3C in HCl Rinse	CV/AA	6362584	2019/10/01	2019/10/04	Meghaben Patel
Mercury 2B in HNO3/H2O2 Imp.	CV/AA	6361739	2019/09/30	2019/10/02	Meghaben Patel
Mercury 3A in HNO3 Rinse	CV/AA	6362483	2019/10/01	2019/10/04	Meghaben Patel
Mercury 3B in KMnO4/H2SO4 Imp.	CV/AA	6361741	2019/10/01	2019/10/02	Meghaben Patel
Mercury 1B in Filter + Rinse (M29)	CV/AA	6360437	2019/09/30	2019/10/04	Meghaben Patel
Metals B.H. in H2O2/HNO3 Imp.(6020B m)	ICP1/MS	6360441	2019/09/30	2019/10/01	Nan Raykha
Metals F.H. in Filter + Rinses (6020B m)	ICP1/MS	6360423	2019/09/30	2019/10/04	Nan Raykha

BV Labs ID: KWS559
Sample ID: M29- R1
Matrix: Stack Sampling Train

Collected: 2019/09/20
Shipped:
Received: 2019/09/26

Test Description	Instrumentation	Batch	Extracted	Date Analyzed	Analyst
Mercury 3C in HCl Rinse	CV/AA	6362584	2019/10/01	2019/10/04	Meghaben Patel
Mercury 2B in HNO3/H2O2 Imp.	CV/AA	6361739	2019/09/30	2019/10/02	Meghaben Patel
Mercury 3A in HNO3 Rinse	CV/AA	6362483	2019/10/01	2019/10/04	Meghaben Patel
Mercury 3B in KMnO4/H2SO4 Imp.	CV/AA	6361741	2019/10/01	2019/10/02	Meghaben Patel
Mercury 1B in Filter + Rinse (M29)	CV/AA	6360437	2019/09/30	2019/10/04	Meghaben Patel
Metals B.H. in H2O2/HNO3 Imp.(6020B m)	ICP1/MS	6360441	2019/09/30	2019/10/01	Nan Raykha
Metals F.H. in Filter + Rinses (6020B m)	ICP1/MS	6360423	2019/09/30	2019/10/04	Nan Raykha

BV Labs ID: KWS559 Dup
Sample ID: M29- R1
Matrix: Stack Sampling Train

Collected: 2019/09/20
Shipped:
Received: 2019/09/26

Test Description	Instrumentation	Batch	Extracted	Date Analyzed	Analyst
Mercury 3C in HCl Rinse	CV/AA	6362584	2019/10/01	2019/10/04	Meghaben Patel
Mercury 2B in HNO3/H2O2 Imp.	CV/AA	6361739	2019/09/30	2019/10/02	Meghaben Patel
Metals B.H. in H2O2/HNO3 Imp.(6020B m)	ICP1/MS	6360441	2019/09/30	2019/10/01	Nan Raykha
Metals F.H. in Filter + Rinses (6020B m)	ICP1/MS	6360423	2019/09/30	2019/10/04	Nan Raykha

BV Labs ID: KWS560
Sample ID: M29- R2
Matrix: Stack Sampling Train

Collected: 2019/09/20
Shipped:
Received: 2019/09/26

Test Description	Instrumentation	Batch	Extracted	Date Analyzed	Analyst
Mercury 3C in HCl Rinse	CV/AA	6362584	2019/10/01	2019/10/04	Meghaben Patel
Mercury 2B in HNO3/H2O2 Imp.	CV/AA	6361739	2019/09/30	2019/10/02	Meghaben Patel
Mercury 3A in HNO3 Rinse	CV/AA	6362483	2019/10/01	2019/10/04	Meghaben Patel
Mercury 3B in KMnO4/H2SO4 Imp.	CV/AA	6361741	2019/10/01	2019/10/02	Meghaben Patel
Mercury 1B in Filter + Rinse (M29)	CV/AA	6360437	2019/09/30	2019/10/04	Meghaben Patel
Metals B.H. in H2O2/HNO3 Imp.(6020B m)	ICP1/MS	6360441	2019/09/30	2019/10/01	Nan Raykha
Metals F.H. in Filter + Rinses (6020B m)	ICP1/MS	6360423	2019/09/30	2019/10/04	Nan Raykha

Bureau Veritas Laboratories 6740 Campobello Road, Mississauga, Ontario, L5N 2L8 Tel: (905) 817-5700 Toll-Free: 800-563-6266 Fax: (905) 817-5777 www.bvlabs.com

Microbiology testing is conducted at 6660 Campobello Rd. Chemistry testing is conducted at 6740 Campobello Rd.

© Mostardi Platt

BV Labs Job #: B9R0442
Report Date: 2019/10/07

Mostardi Platt
Client Project #: M193411-05
Site Location: SIMS METAL MANAGEMENT

TEST SUMMARY

BV Labs ID: KWS560 Dup
Sample ID: M29- R2
Matrix: Stack Sampling Train

Collected: 2019/09/20
Shipped:
Received: 2019/09/26

Test Description	Instrumentation	Batch	Extracted	Date Analyzed	Analyst
Mercury 3B in KMnO4/H2SO4 Imp.	CV/AA	6361741	2019/10/01	2019/10/02	Meghaben Patel

BV Labs ID: KWS561
Sample ID: M29- R3
Matrix: Stack Sampling Train

Collected: 2019/09/20
Shipped:
Received: 2019/09/26

Test Description	Instrumentation	Batch	Extracted	Date Analyzed	Analyst
Mercury 3C in HCl Rinse	CV/AA	6362584	2019/10/01	2019/10/04	Meghaben Patel
Mercury 2B in HNO3/H2O2 Imp.	CV/AA	6361739	2019/09/30	2019/10/02	Meghaben Patel
Mercury 3A in HNO3 Rinse	CV/AA	6362483	2019/10/01	2019/10/04	Meghaben Patel
Mercury 3B in KMnO4/H2SO4 Imp.	CV/AA	6361741	2019/10/01	2019/10/02	Meghaben Patel
Mercury 1B in Filter + Rinse (M29)	CV/AA	6360437	2019/09/30	2019/10/04	Meghaben Patel
Metals B.H. in H2O2/HNO3 Imp.(6020B m)	ICP1/MS	6360441	2019/09/30	2019/10/01	Nan Raykha
Metals F.H. in Filter + Rinses (6020B m)	ICP1/MS	6360423	2019/09/30	2019/10/04	Nan Raykha

BV Labs ID: KWS561 Dup
Sample ID: M29- R3
Matrix: Stack Sampling Train

Collected: 2019/09/20
Shipped:
Received: 2019/09/26

Test Description	Instrumentation	Batch	Extracted	Date Analyzed	Analyst
Mercury 3A in HNO3 Rinse	CV/AA	6362483	2019/10/01	2019/10/04	Meghaben Patel
Mercury 1B in Filter + Rinse (M29)	CV/AA	6360437	2019/09/30	2019/10/04	Meghaben Patel

Bureau Veritas Laboratories 6740 Campobello Road, Mississauga, Ontario, L5N 2L8 Tel: (905) 817-5700 Toll-Free: 800-563-6266 Fax: (905) 817-5777 www.bvlabs.com

Microbiology testing is conducted at 6660 Campobello Rd. Chemistry testing is conducted at 6740 Campobello Rd.

© Mostardi Platt

GENERAL COMMENTS

EPA M29 METALS (FRONT & BACK SEPARATE)

Metals F.H. in Filter + Rinses (6020B m): Post digestion duplicate and spike were done on sample KWS559.
Metals B.H. in H2O2/HNO3 Imp.(6020B m): Post digestion duplicate and spike were done on sample KWS559.

Results relate only to the items tested.

Bureau Veritas Laboratories 6740 Campobello Road, Mississauga, Ontario, L5N 2L8 Tel: (905) 817-5700 Toll-Free: 800-563-6266 Fax: (905) 817-5777 www.bvlabs.com

Microbiology testing is conducted at 6660 Campobello Rd. Chemistry testing is conducted at 6740 Campobello Rd.

© Mostardi Platt

BV Labs Job #: B9R0442
Report Date: 2019/10/07

Mostardi Platt
Client Project #: M193411-05
Site Location: SIMS METAL MANAGEMENT

QUALITY ASSURANCE REPORT

QA/QC Batch	Init	QC Type	Parameter	Date Analyzed	Value	% Recovery	UNITS	QC Limits
6360423	N_R	Matrix Spike(KWS559)	Front Half Antimony (Sb)	2019/10/04		98	%	75 - 125
			Front Half Arsenic (As)	2019/10/04		97	%	75 - 125
			Front Half Barium (Ba)	2019/10/04		91	%	75 - 125
			Front Half Beryllium (Be)	2019/10/04		92	%	75 - 125
			Front Half Cadmium (Cd)	2019/10/04		98	%	75 - 125
			Front Half Chromium (Cr)	2019/10/04		94	%	75 - 125
			Front Half Cobalt (Co)	2019/10/04		97	%	75 - 125
			Front Half Copper (Cu)	2019/10/04		98	%	75 - 125
			Front Half Lead (Pb)	2019/10/04		97	%	75 - 125
			Front Half Manganese (Mn)	2019/10/04		93	%	75 - 125
			Front Half Nickel (Ni)	2019/10/04		96	%	75 - 125
			Front Half Phosphorus (P)	2019/10/04		90	%	75 - 125
			Front Half Selenium (Se)	2019/10/04		98	%	75 - 125
			Front Half Silver (Ag)	2019/10/04		105	%	75 - 125
			Front Half Thallium (Tl)	2019/10/04		97	%	75 - 125
			Front Half Zinc (Zn)	2019/10/04		106	%	75 - 125
6360423	N_R	Matrix Spike DUP(KWS559)	Front Half Antimony (Sb)	2019/10/04		97	%	75 - 125
			Front Half Arsenic (As)	2019/10/04		97	%	75 - 125
			Front Half Barium (Ba)	2019/10/04		93	%	75 - 125
			Front Half Beryllium (Be)	2019/10/04		96	%	75 - 125
			Front Half Cadmium (Cd)	2019/10/04		97	%	75 - 125
			Front Half Chromium (Cr)	2019/10/04		93	%	75 - 125
			Front Half Cobalt (Co)	2019/10/04		98	%	75 - 125
			Front Half Copper (Cu)	2019/10/04		95	%	75 - 125
			Front Half Lead (Pb)	2019/10/04		99	%	75 - 125
			Front Half Manganese (Mn)	2019/10/04		93	%	75 - 125
			Front Half Nickel (Ni)	2019/10/04		95	%	75 - 125
			Front Half Phosphorus (P)	2019/10/04		88	%	75 - 125
			Front Half Selenium (Se)	2019/10/04		97	%	75 - 125
			Front Half Silver (Ag)	2019/10/04		104	%	75 - 125
			Front Half Thallium (Tl)	2019/10/04		100	%	75 - 125
			Front Half Zinc (Zn)	2019/10/04		106	%	75 - 125
6360423	N_R	MS/MSD RPD	Front Half Antimony (Sb)	2019/10/04	0.23		%	20
			Front Half Arsenic (As)	2019/10/04	0.25		%	20
			Front Half Barium (Ba)	2019/10/04	2.7		%	20
			Front Half Beryllium (Be)	2019/10/04	4.3		%	20
			Front Half Cadmium (Cd)	2019/10/04	0.60		%	20
			Front Half Chromium (Cr)	2019/10/04	1.3		%	20
			Front Half Cobalt (Co)	2019/10/04	0.89		%	20
			Front Half Copper (Cu)	2019/10/04	3.1		%	20
			Front Half Lead (Pb)	2019/10/04	1.6		%	20
			Front Half Manganese (Mn)	2019/10/04	0		%	20
			Front Half Nickel (Ni)	2019/10/04	1.2		%	20
			Front Half Phosphorus (P)	2019/10/04	0.26		%	20
			Front Half Selenium (Se)	2019/10/04	1.2		%	20
			Front Half Silver (Ag)	2019/10/04	0.24		%	20
			Front Half Thallium (Tl)	2019/10/04	3.1		%	20
			Front Half Zinc (Zn)	2019/10/04	0.31		%	20
6360423	N_R	Spiked Blank	Front Half Antimony (Sb)	2019/10/04		98	%	85 - 115
			Front Half Arsenic (As)	2019/10/04		103	%	85 - 115
			Front Half Barium (Ba)	2019/10/04		96	%	85 - 115
			Front Half Beryllium (Be)	2019/10/04		103	%	85 - 115

Bureau Veritas Laboratories 6740 Campobello Road, Mississauga, Ontario, L5N 2L8 Tel: (905) 817-5700 Toll-Free: 800-563-6266 Fax: (905) 817-5777 www.bvlabs.com

Microbiology testing is conducted at 6660 Campobello Rd. Chemistry testing is conducted at 6740 Campobello Rd.

© Mostardi Platt

QUALITY ASSURANCE REPORT(CONT'D)

QA/QC Batch	Init	QC Type	Parameter	Date Analyzed	Value	% Recovery	UNITS	QC Limits
			Front Half Cadmium (Cd)	2019/10/04		98	%	85 - 115
			Front Half Chromium (Cr)	2019/10/04		102	%	85 - 115
			Front Half Cobalt (Co)	2019/10/04		103	%	85 - 115
			Front Half Copper (Cu)	2019/10/04		104	%	85 - 115
			Front Half Lead (Pb)	2019/10/04		99	%	85 - 115
			Front Half Manganese (Mn)	2019/10/04		97	%	85 - 115
			Front Half Nickel (Ni)	2019/10/04		101	%	85 - 115
			Front Half Phosphorus (P)	2019/10/04		107	%	85 - 115
			Front Half Selenium (Se)	2019/10/04		102	%	85 - 115
			Front Half Silver (Ag)	2019/10/04		100	%	85 - 115
			Front Half Thallium (Tl)	2019/10/04		100	%	85 - 115
			Front Half Zinc (Zn)	2019/10/04		100	%	85 - 115
6360423	N_R	Spiked Blank DUP	Front Half Antimony (Sb)	2019/10/04		100	%	85 - 115
			Front Half Arsenic (As)	2019/10/04		104	%	85 - 115
			Front Half Barium (Ba)	2019/10/04		100	%	85 - 115
			Front Half Beryllium (Be)	2019/10/04		102	%	85 - 115
			Front Half Cadmium (Cd)	2019/10/04		101	%	85 - 115
			Front Half Chromium (Cr)	2019/10/04		103	%	85 - 115
			Front Half Cobalt (Co)	2019/10/04		105	%	85 - 115
			Front Half Copper (Cu)	2019/10/04		106	%	85 - 115
			Front Half Lead (Pb)	2019/10/04		101	%	85 - 115
			Front Half Manganese (Mn)	2019/10/04		98	%	85 - 115
			Front Half Nickel (Ni)	2019/10/04		101	%	85 - 115
			Front Half Phosphorus (P)	2019/10/04		104	%	85 - 115
			Front Half Selenium (Se)	2019/10/04		102	%	85 - 115
			Front Half Silver (Ag)	2019/10/04		102	%	85 - 115
			Front Half Thallium (Tl)	2019/10/04		101	%	85 - 115
			Front Half Zinc (Zn)	2019/10/04		101	%	85 - 115
6360423	N_R	RPD	Front Half Antimony (Sb)	2019/10/04	1.8		%	20
			Front Half Arsenic (As)	2019/10/04	1.0		%	20
			Front Half Barium (Ba)	2019/10/04	3.6		%	20
			Front Half Beryllium (Be)	2019/10/04	0.53		%	20
			Front Half Cadmium (Cd)	2019/10/04	2.9		%	20
			Front Half Chromium (Cr)	2019/10/04	0.60		%	20
			Front Half Cobalt (Co)	2019/10/04	1.9		%	20
			Front Half Copper (Cu)	2019/10/04	1.9		%	20
			Front Half Lead (Pb)	2019/10/04	1.9		%	20
			Front Half Manganese (Mn)	2019/10/04	0.66		%	20
			Front Half Nickel (Ni)	2019/10/04	0.60		%	20
			Front Half Phosphorus (P)	2019/10/04	3.2		%	20
			Front Half Selenium (Se)	2019/10/04	0.48		%	20
			Front Half Silver (Ag)	2019/10/04	2.4		%	20
			Front Half Thallium (Tl)	2019/10/04	0.78		%	20
			Front Half Zinc (Zn)	2019/10/04	1.1		%	20
6360423	N_R	Method Blank	Front Half Antimony (Sb)	2019/10/04	<3.0		ug	
			Front Half Arsenic (As)	2019/10/04	<0.80		ug	
			Front Half Barium (Ba)	2019/10/04	<1.2		ug	
			Front Half Beryllium (Be)	2019/10/04	<0.18		ug	
			Front Half Cadmium (Cd)	2019/10/04	<0.18		ug	
			Front Half Chromium (Cr)	2019/10/04	<3.0		ug	
			Front Half Cobalt (Co)	2019/10/04	<0.18		ug	
			Front Half Copper (Cu)	2019/10/04	<1.8		ug	

Bureau Veritas Laboratories 6740 Campobello Road, Mississauga, Ontario, L5N 2L8 Tel: (905) 817-5700 Toll-Free: 800-563-6266 Fax: (905) 817-5777 www.bvlabs.com

© Mostardi Platt

QUALITY ASSURANCE REPORT(CONT'D)

QA/QC Batch	Init	QC Type	Parameter	Date Analyzed	Value	% Recovery	UNITS	QC Limits
			Front Half Lead (Pb)	2019/10/04	<0.60		ug	
			Front Half Manganese (Mn)	2019/10/04	<1.2		ug	
			Front Half Nickel (Ni)	2019/10/04	<1.0		ug	
			Front Half Phosphorus (P)	2019/10/04	<90		ug	
			Front Half Selenium (Se)	2019/10/04	<2.0		ug	
			Front Half Silver (Ag)	2019/10/04	<0.24		ug	
			Front Half Thallium (Tl)	2019/10/04	<0.24		ug	
			Front Half Zinc (Zn)	2019/10/04	<10		ug	
6360423	N_R	RPD - Sample/Sample Dup	Front Half Antimony (Sb)	2019/10/04	0.40		%	20
			Front Half Arsenic (As)	2019/10/04	1.0		%	20
			Front Half Barium (Ba)	2019/10/04	0.72		%	20
			Front Half Beryllium (Be)	2019/10/04	NC		%	20
			Front Half Cadmium (Cd)	2019/10/04	0.88		%	20
			Front Half Chromium (Cr)	2019/10/04	0.93		%	20
			Front Half Cobalt (Co)	2019/10/04	1.5		%	20
			Front Half Copper (Cu)	2019/10/04	1.1		%	20
			Front Half Lead (Pb)	2019/10/04	2.3		%	20
			Front Half Manganese (Mn)	2019/10/04	0.21		%	20
			Front Half Nickel (Ni)	2019/10/04	1.0		%	20
			Front Half Phosphorus (P)	2019/10/04	0.21		%	20
			Front Half Selenium (Se)	2019/10/04	NC		%	20
			Front Half Silver (Ag)	2019/10/04	3.5		%	20
			Front Half Thallium (Tl)	2019/10/04	NC		%	20
			Front Half Zinc (Zn)	2019/10/04	2.5		%	20
6360437	MPD	Reagent Blank	1B Mercury (Hg)	2019/10/04	<0.015		ug	
6360437	MPD	Matrix Spike(KWS561)	1B Mercury (Hg)	2019/10/04		94	%	85 - 115
6360437	MPD	Matrix Spike DUP(KWS561)	1B Mercury (Hg)	2019/10/04		96	%	85 - 115
6360437	MPD	MS/MSD RPD	1B Mercury (Hg)	2019/10/04	1.9		%	20
6360437	MPD	Spiked Blank	1B Mercury (Hg)	2019/10/04		95	%	90 - 110
6360437	MPD	Spiked Blank DUP	1B Mercury (Hg)	2019/10/04		93	%	90 - 110
6360437	MPD	RPD	1B Mercury (Hg)	2019/10/04	1.5		%	20
6360437	MPD	Method Blank	1B Mercury (Hg)	2019/10/04	<0.015		ug	
6360437	MPD	RPD - Sample/Sample Dup	1B Mercury (Hg)	2019/10/04	6.9		%	20
6360441	N_R	Matrix Spike(KWS559)	Back Half Antimony (Sb)	2019/10/01		100	%	75 - 125
			Back Half Arsenic (As)	2019/10/01		99	%	75 - 125
			Back Half Barium (Ba)	2019/10/01		101	%	75 - 125
			Back Half Beryllium (Be)	2019/10/01		104	%	75 - 125
			Back Half Cadmium (Cd)	2019/10/01		98	%	75 - 125
			Back Half Chromium (Cr)	2019/10/01		97	%	75 - 125
			Back Half Cobalt (Co)	2019/10/01		98	%	75 - 125
			Back Half Copper (Cu)	2019/10/01		97	%	75 - 125
			Back Half Lead (Pb)	2019/10/01		102	%	75 - 125
			Back Half Manganese (Mn)	2019/10/01		102	%	75 - 125
			Back Half Nickel (Ni)	2019/10/01		101	%	75 - 125
			Back Half Phosphorus (P)	2019/10/01		98	%	75 - 125
			Back Half Selenium (Se)	2019/10/01		97	%	75 - 125
			Back Half Silver (Ag)	2019/10/01		94	%	75 - 125
			Back Half Thallium (Tl)	2019/10/01		101	%	75 - 125
			Back Half Zinc (Zn)	2019/10/01		97	%	75 - 125
6360441	N_R	Matrix Spike DUP(KWS559)	Back Half Antimony (Sb)	2019/10/01		101	%	75 - 125
			Back Half Arsenic (As)	2019/10/01		99	%	75 - 125
			Back Half Barium (Ba)	2019/10/01		101	%	75 - 125

Bureau Veritas Laboratories 6740 Campobello Road, Mississauga, Ontario, L5N 2L8 Tel: (905) 817-5700 Toll-Free: 800-563-6266 Fax: (905) 817-5777 www.bvlabs.com

© Mostardi Platt

QUALITY ASSURANCE REPORT(CONT'D)

QA/QC Batch	Init	QC Type	Parameter	Date Analyzed	Value	% Recovery	UNITS	QC Limits
			Back Half Beryllium (Be)	2019/10/01		102	%	75 - 125
			Back Half Cadmium (Cd)	2019/10/01		99	%	75 - 125
			Back Half Chromium (Cr)	2019/10/01		98	%	75 - 125
			Back Half Cobalt (Co)	2019/10/01		99	%	75 - 125
			Back Half Copper (Cu)	2019/10/01		97	%	75 - 125
			Back Half Lead (Pb)	2019/10/01		100	%	75 - 125
			Back Half Manganese (Mn)	2019/10/01		104	%	75 - 125
			Back Half Nickel (Ni)	2019/10/01		102	%	75 - 125
			Back Half Phosphorus (P)	2019/10/01		99	%	75 - 125
			Back Half Selenium (Se)	2019/10/01		98	%	75 - 125
			Back Half Silver (Ag)	2019/10/01		94	%	75 - 125
			Back Half Thallium (Tl)	2019/10/01		101	%	75 - 125
			Back Half Zinc (Zn)	2019/10/01		97	%	75 - 125
6360441	N_R	MS/MSD RPD	Back Half Antimony (Sb)	2019/10/01	0.31		%	20
			Back Half Arsenic (As)	2019/10/01	0.60		%	20
			Back Half Barium (Ba)	2019/10/01	0.27		%	20
			Back Half Beryllium (Be)	2019/10/01	1.9		%	20
			Back Half Cadmium (Cd)	2019/10/01	1.2		%	20
			Back Half Chromium (Cr)	2019/10/01	1.2		%	20
			Back Half Cobalt (Co)	2019/10/01	1.4		%	20
			Back Half Copper (Cu)	2019/10/01	0.041		%	20
			Back Half Lead (Pb)	2019/10/01	1.8		%	20
			Back Half Manganese (Mn)	2019/10/01	1.9		%	20
			Back Half Nickel (Ni)	2019/10/01	1.5		%	20
			Back Half Phosphorus (P)	2019/10/01	1.1		%	20
			Back Half Selenium (Se)	2019/10/01	0.81		%	20
			Back Half Silver (Ag)	2019/10/01	0.47		%	20
			Back Half Thallium (Tl)	2019/10/01	0.54		%	20
			Back Half Zinc (Zn)	2019/10/01	0.10		%	20
6360441	N_R	Spiked Blank	Back Half Antimony (Sb)	2019/10/01		100	%	85 - 115
			Back Half Arsenic (As)	2019/10/01		99	%	85 - 115
			Back Half Barium (Ba)	2019/10/01		99	%	85 - 115
			Back Half Beryllium (Be)	2019/10/01		99	%	85 - 115
			Back Half Cadmium (Cd)	2019/10/01		99	%	85 - 115
			Back Half Chromium (Cr)	2019/10/01		97	%	85 - 115
			Back Half Cobalt (Co)	2019/10/01		97	%	85 - 115
			Back Half Copper (Cu)	2019/10/01		97	%	85 - 115
			Back Half Lead (Pb)	2019/10/01		100	%	85 - 115
			Back Half Manganese (Mn)	2019/10/01		100	%	85 - 115
			Back Half Nickel (Ni)	2019/10/01		100	%	85 - 115
			Back Half Phosphorus (P)	2019/10/01		108	%	85 - 115
			Back Half Selenium (Se)	2019/10/01		99	%	85 - 115
			Back Half Silver (Ag)	2019/10/01		98	%	85 - 115
			Back Half Thallium (Tl)	2019/10/01		103	%	85 - 115
			Back Half Zinc (Zn)	2019/10/01		98	%	85 - 115
6360441	N_R	Spiked Blank DUP	Back Half Antimony (Sb)	2019/10/01		104	%	85 - 115
			Back Half Arsenic (As)	2019/10/01		103	%	85 - 115
			Back Half Barium (Ba)	2019/10/01		102	%	85 - 115
			Back Half Beryllium (Be)	2019/10/01		100	%	85 - 115
			Back Half Cadmium (Cd)	2019/10/01		101	%	85 - 115
			Back Half Chromium (Cr)	2019/10/01		101	%	85 - 115
			Back Half Cobalt (Co)	2019/10/01		100	%	85 - 115

Bureau Veritas Laboratories 6740 Campobello Road, Mississauga, Ontario, L5N 2L8 Tel: (905) 817-5700 Toll-Free: 800-563-6266 Fax: (905) 817-5777 www.bvlabs.com

© Mostardi Platt

QUALITY ASSURANCE REPORT(CONT'D)

QA/QC Batch	Init	QC Type	Parameter	Date Analyzed	Value	% Recovery	UNITS	QC Limits
			Back Half Copper (Cu)	2019/10/01		101	%	85 - 115
			Back Half Lead (Pb)	2019/10/01		102	%	85 - 115
			Back Half Manganese (Mn)	2019/10/01		104	%	85 - 115
			Back Half Nickel (Ni)	2019/10/01		104	%	85 - 115
			Back Half Phosphorus (P)	2019/10/01		113	%	85 - 115
			Back Half Selenium (Se)	2019/10/01		101	%	85 - 115
			Back Half Silver (Ag)	2019/10/01		102	%	85 - 115
			Back Half Thallium (Tl)	2019/10/01		102	%	85 - 115
			Back Half Zinc (Zn)	2019/10/01		101	%	85 - 115
6360441	N_R	RPD	Back Half Antimony (Sb)	2019/10/01	4.2		%	20
			Back Half Arsenic (As)	2019/10/01	4.0		%	20
			Back Half Barium (Ba)	2019/10/01	2.6		%	20
			Back Half Beryllium (Be)	2019/10/01	1.0		%	20
			Back Half Cadmium (Cd)	2019/10/01	2.1		%	20
			Back Half Chromium (Cr)	2019/10/01	3.8		%	20
			Back Half Cobalt (Co)	2019/10/01	3.2		%	20
			Back Half Copper (Cu)	2019/10/01	3.5		%	20
			Back Half Lead (Pb)	2019/10/01	2.7		%	20
			Back Half Manganese (Mn)	2019/10/01	4.2		%	20
			Back Half Nickel (Ni)	2019/10/01	3.3		%	20
			Back Half Phosphorus (P)	2019/10/01	4.2		%	20
			Back Half Selenium (Se)	2019/10/01	2.3		%	20
			Back Half Silver (Ag)	2019/10/01	3.1		%	20
			Back Half Thallium (Tl)	2019/10/01	0.87		%	20
			Back Half Zinc (Zn)	2019/10/01	2.6		%	20
6360441	N_R	Method Blank	Back Half Antimony (Sb)	2019/10/01	<0.40		ug	
			Back Half Arsenic (As)	2019/10/01	<0.40		ug	
			Back Half Barium (Ba)	2019/10/01	<0.60		ug	
			Back Half Beryllium (Be)	2019/10/01	<0.090		ug	
			Back Half Cadmium (Cd)	2019/10/01	<0.090		ug	
			Back Half Chromium (Cr)	2019/10/01	<1.5		ug	
			Back Half Cobalt (Co)	2019/10/01	<0.090		ug	
			Back Half Copper (Cu)	2019/10/01	<0.75		ug	
			Back Half Lead (Pb)	2019/10/01	<0.30		ug	
			Back Half Manganese (Mn)	2019/10/01	<0.60		ug	
			Back Half Nickel (Ni)	2019/10/01	<0.50		ug	
			Back Half Phosphorus (P)	2019/10/01	<45		ug	
			Back Half Selenium (Se)	2019/10/01	<1.0		ug	
			Back Half Silver (Ag)	2019/10/01	<0.12		ug	
			Back Half Thallium (Tl)	2019/10/01	<0.12		ug	
			Back Half Zinc (Zn)	2019/10/01	<5.0		ug	
6360441	N_R	RPD - Sample/Sample Dup	Back Half Antimony (Sb)	2019/10/01	NC		%	20
			Back Half Arsenic (As)	2019/10/01	NC		%	20
			Back Half Barium (Ba)	2019/10/01	1.1		%	20
			Back Half Beryllium (Be)	2019/10/01	NC		%	20
			Back Half Cadmium (Cd)	2019/10/01	12		%	20
			Back Half Chromium (Cr)	2019/10/01	1.4		%	20
			Back Half Cobalt (Co)	2019/10/01	NC		%	20
			Back Half Copper (Cu)	2019/10/01	1.3		%	20
			Back Half Lead (Pb)	2019/10/01	2.0		%	20
			Back Half Manganese (Mn)	2019/10/01	4.1		%	20
			Back Half Nickel (Ni)	2019/10/01	2.7		%	20

Bureau Veritas Laboratories 6740 Campobello Road, Mississauga, Ontario, L5N 2L8 Tel: (905) 817-5700 Toll-Free: 800-563-6266 Fax: (905) 817-5777 www.bvlabs.com

Microbiology testing is conducted at 6660 Campobello Rd. Chemistry testing is conducted at 6740 Campobello Rd.

© Mostardi Platt

BV Labs Job #: B9R0442
Report Date: 2019/10/07

Mostardi Platt
Client Project #: M193411-05
Site Location: SIMS METAL MANAGEMENT

QUALITY ASSURANCE REPORT(CONT'D)

QA/QC Batch	Init	QC Type	Parameter	Date Analyzed	Value	% Recovery	UNITS	QC Limits
			Back Half Phosphorus (P)	2019/10/01	NC		%	20
			Back Half Selenium (Se)	2019/10/01	NC		%	20
			Back Half Silver (Ag)	2019/10/01	NC		%	20
			Back Half Thallium (Tl)	2019/10/01	NC		%	20
			Back Half Zinc (Zn)	2019/10/01	0.57		%	20
6361739	MPD	Matrix Spike(KWS559)	2B Mercury (Hg)	2019/10/02		94	%	85 - 115
6361739	MPD	Matrix Spike DUP(KWS559)	2B Mercury (Hg)	2019/10/02		95	%	85 - 115
6361739	MPD	MS/MSD RPD	2B Mercury (Hg)	2019/10/02	0.85		%	20
6361739	MPD	Spiked Blank	2B Mercury (Hg)	2019/10/02		99	%	90 - 110
6361739	MPD	Spiked Blank DUP	2B Mercury (Hg)	2019/10/02		99	%	90 - 110
6361739	MPD	RPD	2B Mercury (Hg)	2019/10/02	0.10		%	20
6361739	MPD	Method Blank	2B Mercury (Hg)	2019/10/02	<0.015		ug	
6361739	MPD	RPD - Sample/Sample Dup	2B Mercury (Hg)	2019/10/02	NC		%	20
6361741	MPD	Reagent Blank	3B Mercury (Hg)	2019/10/02	<0.013		ug	
6361741	MPD	Matrix Spike(KWS560)	3B Mercury (Hg)	2019/10/02		97	%	85 - 115
6361741	MPD	Matrix Spike DUP(KWS560)	3B Mercury (Hg)	2019/10/02		97	%	85 - 115
6361741	MPD	MS/MSD RPD	3B Mercury (Hg)	2019/10/02	0.72		%	20
6361741	MPD	Spiked Blank	3B Mercury (Hg)	2019/10/02		99	%	90 - 110
6361741	MPD	Spiked Blank DUP	3B Mercury (Hg)	2019/10/02		101	%	90 - 110
6361741	MPD	RPD	3B Mercury (Hg)	2019/10/02	1.7		%	20
6361741	MPD	Method Blank	3B Mercury (Hg)	2019/10/02	<0.013		ug	
6361741	MPD	RPD - Sample/Sample Dup	3B Mercury (Hg)	2019/10/02	0.89		%	20
6362483	MPD	Matrix Spike(KWS561)	3A Mercury (Hg)	2019/10/04		97	%	85 - 115
6362483	MPD	Spiked Blank	3A Mercury (Hg)	2019/10/04		101	%	90 - 110
6362483	MPD	Spiked Blank DUP	3A Mercury (Hg)	2019/10/04		100	%	90 - 110
6362483	MPD	RPD	3A Mercury (Hg)	2019/10/04	1.0		%	20
6362483	MPD	Method Blank	3A Mercury (Hg)	2019/10/04	<0.005		ug	
6362483	MPD	RPD - Sample/Sample Dup	3A Mercury (Hg)	2019/10/04	3.8		%	20
6362584	MPD	Reagent Blank	3C Mercury (Hg)	2019/10/04	<0.013		ug	
6362584	MPD	Matrix Spike(KWS559)	3C Mercury (Hg)	2019/10/04		84 (1)	%	85 - 115
6362584	MPD	Matrix Spike DUP(KWS559)	3C Mercury (Hg)	2019/10/04		99	%	85 - 115
6362584	MPD	MS/MSD RPD	3C Mercury (Hg)	2019/10/04	17		%	20
6362584	MPD	Spiked Blank	3C Mercury (Hg)	2019/10/04		98	%	90 - 110
6362584	MPD	Spiked Blank DUP	3C Mercury (Hg)	2019/10/04		98	%	90 - 110
6362584	MPD	RPD	3C Mercury (Hg)	2019/10/04	0.41		%	20
6362584	MPD	Method Blank	3C Mercury (Hg)	2019/10/04	<0.013		ug	
6362584	MPD	RPD - Sample/Sample Dup	3C Mercury (Hg)	2019/10/04	4.4		%	20

Duplicate: Paired analysis of a separate portion of the same sample. Used to evaluate the variance in the measurement.

Reagent Blank: A blank matrix containing all reagents used in the analytical procedure. Used to determine any analytical contamination.

Matrix Spike: A sample to which a known amount of the analyte of interest has been added. Used to evaluate sample matrix interference.

Spiked Blank: A blank matrix sample to which a known amount of the analyte, usually from a second source, has been added. Used to evaluate method accuracy.

Method Blank: A blank matrix containing all reagents used in the analytical procedure. Used to identify laboratory contamination.

NC (Duplicate RPD): The duplicate RPD was not calculated. The concentration in the sample and/or duplicate was too low to permit a reliable RPD calculation (absolute difference <= 2x RDL).

(1) Matrix spike could not be calculated accurately due to high mercury content in the native sample.

Bureau Veritas Laboratories 6740 Campobello Road, Mississauga, Ontario, L5N 2L8 Tel: (905) 817-5700 Toll-Free: 800-563-6266 Fax: (905) 817-5777 www.bvlabs.com

© Mostardi Platt

BV Labs Job #: B9R0442
Report Date: 2019/10/07

Mostardi Platt
Client Project #: M193411-05
Site Location: SIMS METAL MANAGEMENT

VALIDATION SIGNATURE PAGE

The analytical data and all QC contained in this report were reviewed and validated by the following individual(s).

John Bowman, Supervisor, Metals Group

Walt Wang, Scientific Specialist – Inorganic

BV Labs has procedures in place to guard against improper use of the electronic signature and have the required "signatories", as per ISO/IEC 17025, signing the reports. For Service Group specific validation please refer to the Validation Signature Page.

Bureau Veritas Laboratories 6740 Campobello Road, Mississauga, Ontario, L5N 2L8 Tel: (905) 817-5700 Toll-Free: 800-563-6266 Fax: (905) 817-5777 www.bvlabs.com

© Mostardi Platt

Appendix F – Reference Method Test Data (Computerized Sheets)

© Mostardi Platt

Client:	Metal Management Midwest, Inc.		
Facility:	Paulina Street Facility		
Test Location:	Shredder Emissions		
Project #:	M193411		
Test Method:	5/202		
Test Engineer:	JJC		
Test Technician:	DPP1		
	R1	**R2**	**R3**
Temp ID:	CM31	CM31	CM31
Meter ID:	CM31	CM31	CM31
Pitot ID:	120	120	120
Filter ID:	13926	13925	13927
Filter Pre-Weight (grams):	0.45002	0.45043	0.44822
Nozzle Diameter (Inches):	0.174	0.174	0.174
Meter Calibration Date:	9/6/2019	9/6/2019	9/6/2019
Meter Calibration Factor (Y):	0.998	0.998	0.998
Meter Orifice Setting (Delta H):	1.903	1.903	1.903
Nozzle Kit ID Number and Material:	Teflon 11	Teflon 11	Teflon 11
Pitot Tube Coefficient:	0.840		
Probe Length (Feet):	6.0		
Probe Liner Material:	Glass		
Sample Plane:	Horizontal		
Port Length (Inches):	1.00		
Port Size (Diameter, Inches):	4.50		
Port Type:	Nipple		
Duct Shape:	Circular		
Diameter (Feet):	4.167		
Duct Area (Square Feet):	13.638		
Upstream Diameters:	1.4		
Downstream Diameters:	4.5		
Number of Ports Sampled:	2		
Number of Points per Port:	12		
Minutes per Point:	3.0		
Minutes per Reading:	3.0		
Total Number of Traverse Points:	24		
Test Length (Minutes):	72		
Train Type:	Hot Box		
Source Condition:	Normal		
Diluent Model/Serial Number:	Ecom		
Moisture Balance ID:	S10-33		
# of Runs	3		

© Mostardi Platt

Run 1-Method 5/202

Client:	**Metal Management Midwest, Inc.**	**Date:**	**9/20/19**
Facility:	**Paulina Street Facility**	**Start Time:**	**9:00**
Test Location:	**Shredder Emissions**	**End Time:**	**10:26**
Source Condition:	**Normal**		

DRY GAS METER CONDITIONS

ΔH:	0.69	in. H_2O
Meter Temperature, Tm:	88.2	°F
Sqrt ΔP:	0.817	in. H_2O
Stack Temperature, Ts:	88.4	°F
Meter Volume, Vm:	33.219	ft^3
Meter Volume, Vmstd:	31.557	dscf
Meter Volume, Vwstd:	2.261	wscf
Isokinetic Variance:	103.2	%I
Test Length:	72.00	in mins.
Nozzle Diameter:	0.174	in inches
Barometric Pressure:	29.52	in Hg
Filter ID:	13926	

STACK CONDITIONS

Static Pressure	-3.00	in. H_2O
Flue Pressure (Ps):	29.30	in. Hg. abs.
Carbon Dioxide:	0.00	%
Oxygen:	21.00	%
Nitrogen:	79.00	%
Gas Weight dry, Md:	28.840	lb/lb mole
Gas Weight wet, Ms:	28.341	lb/lb mole
Excess Air:	---	%
Gas Velocity, Vs:	47.683	fps
Volumetric Flow:	39,017	acfm
Volumetric Flow:	35,093	dscfm
Volumetric Flow:	36,785	scfm

MOISTURE DETERMINATION

Initial Impinger Content:	1728.4	ml	Silica Initial Wt.	842.2	grams
Final Impinger Content:	1762.9	ml	Silica Final Wt.	855.7	grams
Impinger Difference:	34.5	ml	Silica Difference:	13.5	grams

Total Water Gain: 48.0 Moisture, Bws: 0.067 **Supersaturation Value, Bws: 0.046**

Port-Point No.	Clock Time	Velocity Head Δp in. H2O	Orifice ΔH in. H2O	Actual Meter Vol. ft^3	Stack Temp °F	Meter Temp Inlet °F	Meter Temp Outlet °F	Probe Temp °F	Filter Exit Temp °F	Impinger Exit Temp °F	CPM Filter Exit Temp °F
1-1	9:00:00	0.90	0.93	921.002	86	83	81	250	252	66	82
-2	9:03:00	0.70	0.72	922.590	88	83	82	249	252	66	83
-3	9:06:00	0.65	0.66	924.520	88	84	82	250	255	65	84
-4	9:09:00	0.60	0.62	925.320	88	84	83	251	255	64	85
-5	9:12:00	0.82	0.84	926.660	89	85	84	253	255	63	85
-6	9:15:00	0.80	0.82	928.190	89	85	84	254	257	63	85
-7	9:18:00	0.79	0.81	929.700	89	86	85	255	256	62	85
-8	9:21:00	0.77	0.80	931.190	89	87	85	254	255	62	84
-9	9:24:00	0.76	0.78	932.680	90	88	86	256	255	61	83
-10	9:27:00	0.82	0.84	934.150	90	89	86	254	254	62	83
-11	9:30:00	0.79	0.82	935.680	90	91	86	254	255	61	83
-12	9:33:00	0.76	0.79	937.180	90	91	87	253	255	62	83
	9:36:00			938.663							
1-1	9:50:00	0.81	0.84	938.663	89	91	86	252	251	60	82
-2	9:53:00	0.77	0.80	940.160	89	92	93	252	251	61	81
-3	9:56:00	0.75	0.78	941.660	86	92	88	253	254	61	82
-4	9:59:00	0.52	0.54	943.140	86	93	88	254	254	62	83
-5	10:02:00	0.51	0.53	944.370	88	93	89	249	250	63	82
-6	10:05:00	0.52	0.54	945.590	89	93	89	250	251	63	83
-7	10:08:00	0.56	0.58	946.820	89	94	89	250	250	64	82
-8	10:11:00	0.53	0.55	948.100	88	94	89	251	253	63	82
-9	10:14:00	0.59	0.62	949.330	89	94	90	252	254	62	82
-10	10:17:00	0.59	0.62	950.650	88	94	90	253	249	61	83
-11	10:20:00	0.45	0.41	951.960	87	94	90	255	249	61	83
-12	10:23:00	0.43	0.43	953.100	88	93	90	255	253	61	82
	10:26:00			954.221							
Total	1:12:00			33.219		89.7	86.8				
Average			0.69		88.4	88.2					
Min			0.41		86.0	81.0					
Max			0.93		90.0	94.0					

IMPINGER WEIGHT SHEET - RUN 1

Client:	**Metal Management Midwest, Inc.**	**Scale Calibration Check Date:**	**9/20/2019**
Facility:	**Paulina Street Facility**	**Scale Calibration Check (see QS-6.05C for procedure)**	
Test Location:	**Shredder Emissions**		
Project #:	**M193411**	**250 grams:**	**250.1**
Date:	**9/20/2019**		
Test Method:	**5/202**	**500 grams:**	**499.9**
Weighed/Measured By:	**ELE**		
Balance ID:	**S10-33**	**750 grams:**	**750.1**

IMPINGER CONTENTS	FINAL MLS / GRAMS	INITIAL MLS / GRAMS	GAIN MLS / GRAMS
Empty	430.7	413.8	16.9
Empty	582.0	583.7	-1.7
DI Water	750.2	730.9	19.3
Silica Gel	855.7	842.2	13.5

1,762.9	1,728.4	34.5
Liquid Final	**Liquid Initial**	**Liquid Gain**
855.7	842.2	13.5
Silica Final	**Silica Initial**	**Silica Gain**

© Mostardi Platt

Run 2-Method 5/202

Client:	**Metal Management Midwest, Inc.**	**Date:**	**9/20/19**
Facility:	**Paulina Street Facility**	**Start Time:**	**11:30**
Test Location:	**Shredder Emissions**	**End Time:**	**13:01**
Source Condition:	**Normal**		

DRY GAS METER CONDITIONS			STACK CONDITIONS		
ΔH:	0.81	In. H_2O	Static Pressure	-3.00	in. H_2O
Meter Temperature, Tm:	97.0	°F	Flue Pressure (Ps):	29.27	in. Hg. abs.
Sqrt ΔP:	0.876	In. H_2O	Carbon Dioxide:	0.00	%
Stack Temperature, Ts:	93.8	°F	Oxygen:	21.00	%
Meter Volume, Vm:	36.067	ft^3	Nitrogen:	79.0	%
Meter Volume, Vmstd:	33.699	dscf	Gas Weight dry, Md:	28.840	lb/lb mole
Meter Volume, Vwstd:	1.187	wscf	Gas Weight wet, Ms:	28.471	lb/lb mole
Isokinetic Variance:	102.3	%I	Excess Air:	---	%
			Gas Velocity, Vs:	51.276	fps
Test Length:	72.00	in mins.	Volumetric Flow:	41,957	acfm
Nozzle Diameter:	0.174	in inches	Volumetric Flow:	37,804	dscfm
Barometric Pressure:	29.49	in Hg	Volumetric Flow:	39,136	scfm
Filter ID:	13925				
Filter Pre Weight (grams):	0.45043				

MOISTURE DETERMINATION

Initial Impinger Content:	1760.2	ml	Silica Initial Wt.	852.9	grams
Final Impinger Content:	1769.3	ml	Silica Final Wt.	869.0	grams
Impinger Difference:	9.1	ml	Silica Difference:	16.1	grams

Total Water Gain: 25.2 Moisture, Bws: 0.034 **Supersaturation Value, Bws: 0.055**

Port-Point No.	Clock Time	Velocity Head Δp in. H2O	Orifice ΔH in. H2O	Actual Meter Vol. ft^3	Stack Temp °F	Meter Temp Inlet °F	Meter Temp Outlet °F	Probe Temp °F	Filter Exit Temp °F	Impinger Exit Temp °F	CPM Filter Exit Temp °F
1-1	11:30:00	0.87	1.30	961.863	91	92	91	245	227	62	83
-2	11:33:00	0.69	0.71	962.510	91	92	91	246	230	63	82
-3	11:36:00	0.76	0.78	964.300	96	96	93	248	232	63	83
-4	11:39:00	0.76	0.78	965.640	97	96	93	248	232	64	83
-5	11:42:00	0.77	0.79	967.120	97	96	92	248	231	63	84
-6	11:45:00	0.78	0.80	968.710	98	97	93	252	231	62	82
-7	11:48:00	0.67	0.69	969.940	90	97	93	252	231	63	82
-8	11:56:00	0.82	0.84	971.360	92	97	93	251	230	63	81
-9	11:59:00	0.81	0.83	973.310	92	98	93	250	230	62	82
-10	12:02:00	0.83	0.85	974.850	91	98	94	250	231	62	82
-11	12:05:00	0.82	0.84	976.290	92	100	94	249	230	62	83
-12	12:08:00	0.86	0.88	977.580	93	99	94	248	229	63	84
	12:11:00			979.161							
1-1	12:22:00	0.73	0.75	979.161	94	98	96	248	231	63	83
-2	12:25:00	0.73	0.75	980.780	94	100	96	247	231	64	83
-3	12:28:00	0.72	0.74	982.190	95	100	96	247	231	64	82
-4	12:31:00	0.70	0.72	983.560	96	101	97	247	230	65	84
-5	12:37:00	0.73	0.75	984.840	97	101	97	251	230	64	83
-6	12:40:00	0.79	0.81	986.550	93	101	97	251	230	63	84
-7	12:43:00	0.79	0.81	988.080	93	102	97	249	230	62	84
-8	12:46:00	0.83	0.85	989.570	93	103	98	248	229	63	83
-9	12:49:00	0.68	0.69	991.290	94	102	98	249	230	64	83
-10	12:52:00	0.69	0.71	992.530	94	102	98	250	230	63	82
-11	12:55:00	0.80	0.82	993.970	93	103	98	251	230	63	82
-12	12:58:00	0.81	0.83	995.480	94	104	98	250	229	62	81
	13:01:00			997.930							
Total	1:20:00			36.067		99.0	95.0				
Average			0.81		93.8	97.0					
Min			0.69		90.0	91.0					
Max			1.30		98.0	104.0					

IMPINGER WEIGHT SHEET - RUN 2

Client:	**Metal Management Midwest, Inc.**	**Scale Calibration Check Date:**	**9/20/2019**
Facility:	**Paulina Street Facility**	**Scale Calibration Check (see QS-6.05C for procedure)**	
Test Location:	**Shredder Emissions**		
Project #:	**M193411**	**250 grams:**	**250.1**
Date:	**9/20/2019**		
Test Method:	**5/202**	**500 grams:**	**499.9**
Weighed/Measured By:	**ELE**		
Balance ID:	**S10-33**	**750 grams:**	**750.1**

IMPINGER CONTENTS	FINAL MLS / GRAMS	INITIAL MLS / GRAMS	GAIN MLS / GRAMS
Empty	412.7	415.3	-2.6
Empty	626.1	629.2	-3.1
DI Water	730.5	715.7	14.8
Silica Gel	869.0	852.9	16.1

1,769.3	1,760.2	9.1
Liquid Final	**Liquid Initial**	**Liquid Gain**
869.0	852.9	16.1
Silica Final	**Silica Initial**	**Silica Gain**

© Mostardi Platt

Run 3-Method 5/202

Client:	**Metal Management Midwest, Inc.**	**Date:**	**9/20/19**
Facility:	**Paulina Street Facility**	**Start Time:**	**13:51**
Test Location:	**Shredder Emissions**	**End Time:**	**15:13**
Source Condition:	**Normal**		

DRY GAS METER CONDITIONS			STACK CONDITIONS		
ΔH:	0.83	In. H_2O	Static Pressure	-3.00	in. H_2O
Meter Temperature, Tm:	104.0	°F	Flue Pressure (Ps):	29.27	in. Hg. abs.
Sqrt ΔP:	0.894	In. H_2O	Carbon Dioxide:	0.00	%
Stack Temperature, Ts:	92.3	°F	Oxygen:	21.00	%
Meter Volume, Vm:	36.739	ft^3	Nitrogen:	79	%
Meter Volume, Vmstd:	33.901	dscf	Gas Weight dry, Md:	28.840	lb/lb mole
Meter Volume, Vwstd:	1.889	wscf	Gas Weight wet, Ms:	28.276	lb/lb mole
Isokinetic Variance:	102.3	%I	Excess Air:	---	%
			Gas Velocity, Vs:	52.431	fps
Test Length:	72.00	in mins.	Volumetric Flow:	42,902	acfm
Nozzle Diameter:	0.174	in inches	Volumetric Flow:	38,036	dscfm
Barometric Pressure:	29.49	in Hg	Volumetric Flow:	40,123	scfm
Filter ID:	13927				
Filter Pre Weight (grams):	0.44822				

MOISTURE DETERMINATION

Initial Impinger Content:	1703.1	ml	Silica Initial Wt.	844.6	grams
Final Impinger Content:	1725.0	ml	Silica Final Wt.	862.8	grams
Impinger Difference:	21.9	ml	Silica Difference:	18.2	grams

Total Water Gain: 40.1 Moisture, Bws: 0.053 **Supersaturation Value, Bws: 0.052**

Port-Point No.	Clock Time	Velocity Head Δp in. H2O	Orifice ΔH in. H2O	Actual Meter Vol. ft^3	Stack Temp °F	Meter Temp Inlet °F	Meter Temp Outlet °F	Probe Temp °F	Filter Exit Temp °F	Impinger Exit Temp °F	CPM Filter Exit Temp °F
1-1	13:51:00	0.91	0.93	997.874	91	102	101	244	230	64	81
-2	13:54:00	0.88	0.90	999.470	91	102	101	244	230	65	80
-3	13:57:00	0.88	0.90	1001.240	90	104	101	245	231	64	80
-4	14:00:00	0.84	0.86	1002.680	90	104	101	246	229	64	81
-5	14:03:00	0.87	0.89	1004.250	92	105	101	248	230	63	81
-6	14:06:00	0.86	0.88	1005.840	92	105	102	249	230	62	82
-7	14:09:00	0.85	0.86	1007.910	91	106	102	251	231	62	82
-8	14:12:00	0.82	0.84	1008.980	92	106	102	252	231	62	82
-9	14:15:00	0.81	0.90	1010.500	92	106	102	251	230	61	81
-10	14:18:00	0.81	0.90	1012.060	90	106	102	250	230	61	81
-11	14:21:00	0.82	0.84	1013.660	92	107	102	250	230	61	80
-12	14:24:00	0.78	0.80	1015.170	91	106	102	250	231	60	79
	14:27:00			1016.870							
1-1	14:37:00	0.75	0.77	1016.870	93	105	103	247	230	62	81
-2	14:40:00	0.75	0.77	1018.320	93	106	103	246	230	62	82
-3	14:43:00	0.58	0.59	1019.710	94	106	103	247	230	61	82
-4	14:46:00	0.64	0.65	1021.170	94	106	103	247	231	61	83
-5	14:49:00	0.64	0.65	1022.600	93	106	103	249	230	60	83
-6	14:52:00	0.69	0.71	1024.070	94	106	103	249	229	60	83
-7	14:55:00	0.79	0.81	1025.440	94	107	103	250	230	61	82
-8	14:58:00	0.81	0.83	1026.910	94	107	104	250	230	61	82
-9	15:01:00	0.82	0.84	1028.470	93	107	103	251	230	62	81
-10	15:04:00	0.88	0.90	1029.980	93	107	103	249	230	62	81
-11	15:07:00	0.87	0.89	1031.580	92	107	103	249	230	63	80
-12	15:10:00	0.88	0.90	1033.110	94	107	103	250	230	63	80
	15:13:00			1034.613							
Total	1:12:00			36.739		105.7	102.3				
Average			0.83		92.3	104.0					
Min			0.59		90.0	101.0					
Max			0.93		94.0	107.0					

© Mostardi Platt

IMPINGER WEIGHT SHEET - RUN 3

Client:	**Metal Management Midwest, Inc.**	**Scale Calibration Check Date:**	**9/20/2019**
Facility:	**Paulina Street Facility**	**Scale Calibration Check (see QS-6.05C for procedure)**	
Test Location:	**Shredder Emissions**		
Project #:	**M193411**	**250 grams:**	**250.1**
Date:	**9/20/2019**		
Test Method:	**5/202**	**500 grams:**	**499.9**
Weighed/Measured By:	**ELE**		
Balance ID:	**S10-33**	**750 grams:**	**750.1**

IMPINGER CONTENTS	FINAL MLS / GRAMS	INITIAL MLS / GRAMS	GAIN MLS / GRAMS
Empty	414.5	414.5	0.0
Empty	582.5	585.0	-2.5
DI Water	728.0	703.6	24.4
Silica Gel	862.8	844.6	18.2

1,725.0	1,703.1	21.9
Liquid Final	**Liquid Initial**	**Liquid Gain**
862.8	844.6	18.2
Silica Final	**Silica Initial**	**Silica Gain**

© Mostardi Platt

Client:	Metal Management Midwest, Inc.		
Facility:	Paulina Street Facility		
Test Location:	Shredder Emissions		
Project #:	M193411		
Test Method:	29		
Test Engineer:	DJK		
Test Technician:	DPP		
	R1	**R2**	**R3**
Temp ID:	CM25	CM25	CM25
Meter ID:	CM25	CM25	CM25
Pitot ID:	6	6	6
Filter ID:	N/A	N/A	N/A
Filter Pre-Weight (grams):	N/A	N/A	N/A
Nozzle Diameter (Inches):	0.170	0.170	0.170
Meter Calibration Date:	9/16/2019	9/16/2019	9/16/2019
Meter Calibration Factor (Y):	0.988	0.988	0.988
Meter Orifice Setting (Delta H):	1.722	1.722	1.722
Nozzle Kit ID Number and Material:	Teflon #10	Teflon #10	Teflon #10
Pitot Tube Coefficient:	0.840		
Probe Length (Feet):	6.0		
Probe Liner Material:	Glass		
Sample Plane:	Horizontal		
Port Length (Inches):	1.00		
Port Size (Diameter, Inches):	4.50		
Port Type:	Nipple		
Duct Shape:	Circular		
Diameter (Feet):	4.167		
Duct Area (Square Feet):	13.638		
Upstream Diameters:	4.5		
Downstream Diameters:	1.4		
Number of Ports Sampled:	2		
Number of Points per Port:	12		
Minutes per Point:	4.0		
Minutes per Reading:	4.0		
Total Number of Traverse Points:	24		
Test Length (Minutes):	96		
Train Type:	Hot Box		
Source Condition:	Normal		
Diluent Model/Serial Number:	ECOM 422		
Moisture Balance ID:	S10-33		
# of Runs	3		

© Mostardi Platt

Run 1-Method 29

Client:	**Metal Management Midwest, Inc.**	**Date:**	**9/20/19**
Facility:	**Paulina Street Facility**	**Start Time:**	**8:58**
Test Location:	**Shredder Emissions**	**End Time:**	**10:38**
Source Condition:	**Normal**		

DRY GAS METER CONDITIONS			STACK CONDITIONS		
ΔH:	0.78	in. H_2O	Static Pressure	-2.00	in. H_2O
Meter Temperature, Tm:	81.3	°F	Flue Pressure (Ps):	29.34	in. Hg. abs.
Sqrt ΔP:	0.954	in. H_2O	Carbon Dioxide:	0.00	%
Stack Temperature, Ts:	80.3	°F	Oxygen:	21.00	%
Meter Volume, Vm:	50.008	ft^3	Nitrogen:	79.00	%
Meter Volume, Vmstd:	47.598	dscf	Gas Weight dry, Md:	28.840	lb/lb mole
Meter Volume, Vwstd:	2.124	wscf	Gas Weight wet, Ms:	28.450	lb/lb mole
Isokinetic Variance:	103.0	%I	Excess Air:	---	%
			Gas Velocity, Vs:	55.101	fps
Test Length:	96.00	in mins.	Volumetric Flow:	45,087	acfm
Nozzle Diameter:	0.170	in inches	Volumetric Flow:	41,656	dscfm
Barometric Pressure:	29.49	in Hg	Volumetric Flow:	43,211	scfm
Filter ID:	N/A		Calculated Fo:	#DIV/0!	
Filter Pre Weight (grams):	N/A		Fo Validity:	#DIV/0!	

MOISTURE DETERMINATION

Initial Impinger Content:	3438.4	ml	Silica Initial Wt.	847.7	grams
Final Impinger Content:	3474.4	ml	Silica Final Wt.	856.8	grams
Impinger Difference:	36.0	ml	Silica Difference:	9.1	grams

Total Water Gain: 45.1 Moisture, Bws: 0.043 **Supersaturation Value, Bws: 0.036**

Port-Point No.	Clock Time	Velocity Head Δp in. H2O	Orifice ΔH in. H2O	Actual Meter Vol. ft^3	Stack Temp °F	Meter Temp Inlet °F	Meter Temp Outlet °F	Probe Temp °F	Filter Exit Temp °F	Impinger Exit Temp °F
1-1	8:58:00	0.95	0.82	251.544	74	74	74	251	251	52
-2	9:02:00	0.95	0.82	253.680	75	75	74	251	251	48
-3	9:06:00	0.90	0.78	255.920	80	77	74	251	251	46
-4	9:10:00	0.88	0.76	257.890	77	79	74	251	252	47
-5	9:14:00	0.88	0.76	259.950	81	80	75	252	251	50
-6	9:18:00	1.00	0.87	262.030	79	82	75	252	250	52
-7	9:22:00	0.92	0.80	264.180	79	83	76	252	250	51
-8	9:26:00	0.90	0.78	266.290	80	83	76	252	250	52
-9	9:30:00	0.90	0.78	268.350	81	84	76	252	250	53
-10	9:34:00	0.75	0.65	270.420	80	85	77	252	251	54
-11	9:38:00	0.85	0.74	272.310	80	86	78	252	251	55
-12	9:42:00	0.88	0.76	274.310	82	86	79	252	253	55
	9:46:00			276.351						
2-1	9:50:00	0.98	0.84	276.351	88	83	80	252	252	64
-2	9:54:00	0.95	0.81	278.550	81	83	81	252	252	55
-3	9:58:00	0.92	0.79	280.660	80	86	80	252	252	56
-4	10:02:00	0.88	0.75	282.770	78	86	81	252	252	55
-5	10:06:00	0.88	0.75	284.810	82	87	81	252	252	57
-6	10:10:00	0.92	0.79	286.850	81	87	81	252	251	55
-7	10:14:00	0.98	0.84	288.940	86	87	82	252	252	55
-8	10:18:00	0.95	0.81	291.092	80	87	82	252	252	55
-9	10:22:00	0.88	0.75	293.240	82	88	83	252	252	58
-10	10:26:00	0.88	0.75	295.280	80	88	83	252	252	58
-11	10:30:00	0.92	0.79	297.360	80	88	83	252	252	58
-12	10:34:00	0.95	0.81	299.440	81	88	83	252	252	59
	10:38:00			301.552						
Total	1:36:00			50.008		83.8	78.7			
Average			0.78		80.3	81.3				
Min			0.65		74.0	74.0				
Max			0.87		88.0	88.0				

© Mostardi Platt

IMPINGER WEIGHT SHEET - RUN 1

Client:	**Metal Management Midwest, Inc**	**Scale Calibration Check Date:**	**9/20/2019**
Facility:	**Paulina Street**	**Scale Calibration Check (see QS-6.05C for procedure)**	
Test Location:	**Shredder Emissions**		
Project #:	**M193411**	**250 grams:**	**250.1**
Date:	**9/20/2019**		
Test Method:	**29**	**500 grams:**	**499.9**
Weighed/Measured By:	**ELE**		
Balance ID:	**S10-33**	**750 grams:**	**750.1**

IMPINGER CONTENTS	FINAL MLS / GRAMS	INITIAL MLS / GRAMS	GAIN MLS / GRAMS
HNO3/H2O2	782.0	756.5	25.5
HNO3/H2O2	692.1	685.9	6.2
Empty	656.8	653.9	2.9
KMnO4/H2SO4	652.8	651.9	0.9
KMnO4/H2SO4	690.7	690.2	0.5
Silica Gel	856.8	847.7	9.1

3,474.4	3,438.4	36.0
Liquid Final	**Liquid Initial**	**Liquid Gain**
856.8	847.7	9.1
Silica Final	**Silica Initial**	**Silica Gain**

© Mostardi Platt

Run 2-Method 29

Client:	**Metal Management Midwest, Inc.**	**Date:**	**9/20/19**
Facility:	**Paulina Street Facility**	**Start Time:**	**11:30**
Test Location:	**Shredder Emissions**	**End Time:**	**13:10**
Source Condition:	**Normal**		

DRY GAS METER CONDITIONS			STACK CONDITIONS		
ΔH:	0.78	In. H_2O	Static Pressure	-3.00	in. H_2O
Meter Temperature, Tm:	89.2	°F	Flue Pressure (Ps):	29.27	in. Hg. abs.
Sqrt ΔP:	0.951	In. H_2O	Carbon Dioxide:	0.00	%
Stack Temperature, Ts:	84.8	°F	Oxygen:	21.00	%
Meter Volume, Vm:	50.341	ft^3	Nitrogen:	79.0	%
Meter Volume, Vmstd:	47.219	dscf	Gas Weight dry, Md:	28.840	lb/lb mole
Meter Volume, Vwstd:	2.148	wscf	Gas Weight wet, Ms:	28.396	lb/lb mole
Isokinetic Variance:	103.5	%I	Excess Air:	---	%
			Gas Velocity, Vs:	55.319	fps
Test Length:	96.00	in mins.	Volumetric Flow:	45,265	acfm
Nozzle Diameter:	0.170	in inches	Volumetric Flow:	41,153	dscfm
Barometric Pressure:	29.49	in Hg	Volumetric Flow:	42,912	scfm
Filter ID:	N/A		Calculated Fo:	#DIV/0!	
Filter Pre Weight (grams):	N/A		Fo Validity:	#DIV/0!	

MOISTURE DETERMINATION

Initial Impinger Content:	3489.7	ml	Silica Initial Wt.	773.4	grams
Final Impinger Content:	3525.2	ml	Silica Final Wt.	783.5	grams
Impinger Difference:	35.5	ml	Silica Difference:	10.1	grams

Total Water Gain: 45.6 Moisture, Bws: 0.044 **Supersaturation Value, Bws: 0.041**

Port-Point No.	Clock Time	Velocity Head Δp in. H2O	Orifice ΔH in. H2O	Actual Meter Vol. ft^3	Stack Temp °F	Meter Temp Inlet °F	Meter Temp Outlet °F	Probe Temp °F	Filter Exit Temp °F	Impinger Exit Temp °F
1-1	11:30:00	0.95	0.82	301.780	80	89	83	252	252	65
-2	11:34:00	0.95	0.82	303.950	80	88	84	252	250	64
-3	11:38:00	0.92	0.79	306.092	83	88	84	252	250	63
-4	11:42:00	0.90	0.78	308.220	83	88	84	252	252	63
-5	11:46:00	0.90	0.78	310.310	84	90	85	252	252	62
-6	11:50:00	0.90	0.78	312.410	85	90	85	252	252	62
-7	11:54:00	0.88	0.76	314.480	85	91	85	252	252	62
-8	11:58:00	0.88	0.76	316.850	85	92	86	252	252	62
-9	12:02:00	0.92	0.79	318.710	84	92	86	252	252	62
-10	12:06:00	0.90	0.78	320.750	85	92	87	252	252	62
-11	12:10:00	0.88	0.76	322.840	87	93	87	252	252	62
-12	12:14:00	0.92	0.79	324.895	84	93	87	252	252	62
	12:18:00			327.051						
2-1	12:22:00	0.95	0.82	327.051	87	89	87	252	252	65
-2	12:26:00	0.95	0.82	329.160	87	90	88	252	252	65
-3	12:30:00	0.92	0.79	331.310	87	92	88	252	252	65
-4	12:34:00	0.92	0.79	332.420	85	93	88	252	252	65
-5	12:38:00	0.90	0.78	335.540	85	93	88	252	252	64
-6	12:42:00	0.88	0.76	337.620	85	93	88	252	252	65
-7	12:46:00	0.85	0.73	339.740	85	93	89	252	252	65
-8	12:50:00	0.88	0.76	341.730	86	94	89	252	252	65
-9	12:54:00	0.88	0.76	343.770	86	94	89	252	252	65
-10	12:58:00	0.88	0.76	345.860	86	94	89	252	252	65
-11	13:02:00	0.90	0.78	347.990	86	94	89	252	252	65
-12	13:06:00	0.92	0.79	349.990	86	94	89	252	252	65
	13:10:00			352.121						
Total	1:36:00			50.341		91.6	86.8			
Average			0.78		84.8	89.2				
Min			0.73		80.0	83.0				
Max			0.82		87.0	94.0				

© Mostardi Platt

IMPINGER WEIGHT SHEET - RUN 2

Client:	**Metal Management Midwest, Inc**	**Scale Calibration Check Date:**	**9/20/2019**
Facility:	**Paulina Street Facility**	**Scale Calibration Check (see QS-6.05C for procedure)**	
Test Location:	**Shredder Emissions**		
Project #:	**M193411**	**250 grams:**	**250.1**
Date:	**9/20/2019**		
Test Method:	**29**	**500 grams:**	**499.9**
Weighed/Measured By:	**ELE**		
Balance ID:	**S10-33**	**750 grams:**	**750.1**

IMPINGER CONTENTS	FINAL MLS / GRAMS	INITIAL MLS / GRAMS	GAIN MLS / GRAMS
HNO3/H2O2	647.0	620.7	26.3
HNO3/H2O2	737.3	730.4	6.9
Empty	647.5	645.8	1.7
KMnO4/H2SO4	738.6	736.6	2.0
KMnO4/H2SO4	754.8	756.2	-1.4
Silica Gel	783.5	773.4	10.1

3,525.2	3,489.7	35.5
Liquid Final	**Liquid Initial**	**Liquid Gain**
783.5	773.4	10.1
Silica Final	**Silica Initial**	**Silica Gain**

© Mostardi Platt

Run 3-Method 29

Client:	**Metal Management Midwest, Inc.**	**Date:**	**9/20/19**
Facility:	**Paulina Street Facility**	**Start Time:**	**13:45**
Test Location:	**Shredder Emissions**	**End Time:**	**15:25**
Source Condition:	**Normal**		

DRY GAS METER CONDITIONS			STACK CONDITIONS		
ΔH:	0.78	In. H_2O	Static Pressure	-3.00	in. H_2O
Meter Temperature, Tm:	95.1	°F	Flue Pressure (Ps):	29.27	in. Hg. abs.
Sqrt ΔP:	0.949	In. H_2O	Carbon Dioxide:	0.00	%
Stack Temperature, Ts:	83.5	°F	Oxygen:	21.00	%
Meter Volume, Vm:	50.676	ft^3	Nitrogen:	79	%
Meter Volume, Vmstd:	47.030	dscf	Gas Weight dry, Md:	28.840	lb/lb mole
Meter Volume, Vwstd:	2.143	wscf	Gas Weight wet, Ms:	28.406	lb/lb mole
Isokinetic Variance:	103.1	%I	Excess Air:	---	%
Heat Input, mmBtu/hr		Heat Input, mmBtu/hr	Gas Velocity, Vs:	55.105	fps
Test Length:	96.00	in mins.	Volumetric Flow:	45,090	acfm
Nozzle Diameter:	0.170	in inches	Volumetric Flow:	41,134	dscfm
Barometric Pressure:	29.49	in Hg	Volumetric Flow:	42,848	scfm
Filter ID:	N/A		Calculated Fo:	#DIV/0!	
Filter Pre Weight (grams):	N/A		Fo Validity:	#DIV/0!	

MOISTURE DETERMINATION

Initial Impinger Content:	3546.7	ml	Silica Initial Wt.	856.8	grams
Final Impinger Content:	3582.6	ml	Silica Final Wt.	866.4	grams
Impinger Difference:	35.9	ml	Silica Difference:	9.6	grams

Total Water Gain: 45.5 Moisture, Bws: 0.044 **Supersaturation Value, Bws: 0.040**

Port-Point No.	Clock Time	Velocity Head Δp in. H2O	Orifice ΔH in. H2O	Actual Meter Vol. ft^3	Stack Temp °F	Meter Temp Inlet °F	Meter Temp Outlet °F	Probe Temp °F	Filter Exit Temp °F	Impinger Exit Temp °F
1-1	13:45:00	0.91	0.79	53.246	81	93	92	252	252	65
-2	13:49:00	0.95	0.82	55.250	83	95	93	252	252	65
-3	13:53:00	0.92	0.79	57.520	83	96	93	252	252	65
-4	13:57:00	0.92	0.79	59.760	82	97	93	252	252	63
-5	14:01:00	0.90	0.78	61.740	82	97	93	252	252	63
-6	14:05:00	0.88	0.76	63.850	82	97	93	252	252	62
-7	14:09:00	0.85	0.73	65.920	82	97	93	252	252	60
-8	14:13:00	0.88	0.76	67.930	82	97	93	252	252	60
-9	14:17:00	0.89	0.77	69.990	83	98	94	252	252	58
-10	14:21:00	0.90	0.78	72.080	84	98	94	252	252	58
-11	14:25:00	0.90	0.78	74.170	84	98	94	252	252	59
-12	14:29:00	0.92	0.79	76.270	84	98	94	252	252	59
	14:33:00			78.372						
2-1	14:37:00	0.90	0.79	78.372	84	94	94	252	252	65
-2	14:41:00	0.92	0.81	80.520	84	95	94	252	252	62
-3	14:45:00	0.92	0.81	82.660	84	97	94	252	252	60
-4	14:49:00	0.90	0.79	84.810	85	98	94	252	252	58
-5	14:53:00	0.90	0.79	86.930	84	98	94	252	252	58
-6	14:57:00	0.88	0.77	89.040	84	97	94	252	252	58
-7	15:01:00	0.90	0.79	91.170	84	97	94	252	252	59
-8	15:05:00	0.90	0.79	93.310	84	97	94	252	252	59
-9	15:09:00	0.88	0.77	95.440	85	96	94	252	252	59
-10	15:13:00	0.90	0.79	97.550	85	96	94	252	252	59
-11	15:17:00	0.90	0.79	99.720	85	96	94	252	252	59
-12	15:21:00	0.90	0.79	101.780	85	96	94	252	252	59
	15:25:00			103.922						
Total	1:36:00			50.676		96.6	93.6			
Average			0.78		83.5	95.1				
Min			0.73		81.0	92.0				
Max			0.82		85.0	98.0				

© Mostardi Platt

IMPINGER WEIGHT SHEET - RUN 3

Client:	**Metal Management Midwest, Inc**	**Scale Calibration Check Date:**	**9/20/2019**
Facility:	**Paulina Street Facility**	**Scale Calibration Check (see QS-6.05C for procedure)**	
Test Location:	**Shredder Emissions**		
Project #:	**M193411**	**250 grams:**	**250.1**
Date:	**9/20/2019**		
Test Method:	**29**	**500 grams:**	**499.9**
Weighed/Measured By:	**ELE**		
Balance ID:	**S10-33**	**750 grams:**	**750.1**

IMPINGER CONTENTS	FINAL MLS / GRAMS	INITIAL MLS / GRAMS	GAIN MLS / GRAMS
HNO3/H2O2	833.2	802.0	31.2
HNO3/H2O2	724.1	719.5	4.6
Empty	662.8	661.2	1.6
KMnO4/H2SO4	677.7	678.7	-1.0
KMnO4/H2SO4	684.8	685.3	-0.5
Silica Gel	866.4	856.8	9.6

3,582.6	3,546.7	35.9
Liquid Final	**Liquid Initial**	**Liquid Gain**
866.4	856.8	9.6
Silica Final	**Silica Initial**	**Silica Gain**

© Mostardi Platt

Client: Metal Management Midwest, Inc.
Facility: Paulina Street Facility
Project #: M193411
Test Location: Shredder Emissions
Operating Condition: Normal
Date: 9/20/19
Run 1

Time	THC ppmv
9:00	51.50
9:01	26.70
9:02	21.10
9:03	45.20
9:04	36.30
9:05	35.70
9:06	32.30
9:07	30.90
9:08	64.10
9:09	115.70
9:10	212.00
9:11	68.60
9:12	57.60
9:13	27.80
9:14	62.00
9:15	58.70
9:16	64.60
9:17	121.30
9:18	45.40
9:19	16.20
9:20	59.30
9:21	55.00
9:22	44.80
9:23	50.50
9:24	29.10
9:25	28.90
9:26	63.70
9:27	53.40
9:28	44.20
9:29	45.00
9:30	73.30
9:31	58.00
9:32	30.40
9:33	48.10
9:34	56.00
9:35	32.30
9:36	50.40
9:37	43.40
9:38	43.60
9:39	43.10
9:40	43.70
9:41	39.50
9:42	35.70
9:43	50.30
9:44	37.50
9:45	25.80
9:46	13.80
9:47	31.40
9:48	33.40
9:49	28.60
9:50	51.70
9:51	24.90
9:52	45.10
9:53	57.80
9:54	57.90
9:55	27.00
9:56	47.40
9:57	60.70
9:58	38.80
9:59	36.10
Average	**48.90**
Min	13.80
Max	212.00

© Mostardi Platt

Client: Metal Management Midwest, Inc.
Facility: Paulina Street Facility
Project #: M193411
Test Location: Shredder Emissions
Operating Condition: Normal
Date: 9/20/19
Run 2

Time	THC ppmv
11:40	36.30
11:41	67.80
11:42	91.40
11:43	52.20
11:44	26.00
11:45	76.30
11:46	48.80
11:47	17.00
11:48	30.00
11:49	57.90
11:50	38.10
11:51	71.20
11:52	95.60
11:53	100.30
11:54	69.20
11:55	71.80
11:56	96.10
11:57	63.60
11:58	67.20
11:59	158.30
12:00	131.00
12:01	95.80
12:02	180.10
12:03	93.20
12:04	56.50
12:05	111.30
12:06	90.50
12:07	78.70
12:08	87.50
12:09	51.80
12:10	47.70
12:11	55.10
12:12	100.00
12:13	70.90
12:14	54.00
12:15	70.40
12:16	58.50
12:17	110.60
12:18	58.60
12:19	62.10
12:20	68.80
12:21	53.00
12:22	88.00
12:23	138.50
12:24	45.50
12:25	58.30
12:26	38.50
12:27	84.00
12:28	64.90
12:29	87.30
12:30	42.50
12:31	51.80
12:32	53.20
12:33	75.80
12:34	43.20
12:35	39.80
12:36	43.40
12:37	28.80
12:38	57.80
12:39	41.40
Average	**70.10**
Min	17.00
Max	180.10

© Mostardi Platt

Client: Metal Management Midwest, Inc.
Facility: Paulina Street Facility
Project #: M193411
Test Location: Shredder Emissions
Operating Condition: Normal
Date: 9/20/19
Run 3

Time	THC ppmv
13:45	49.10
13:46	29.80
13:47	19.50
13:48	29.40
13:49	49.00
13:50	24.10
13:51	26.20
13:52	79.10
13:53	47.60
13:54	38.50
13:55	27.80
13:56	312.00
13:57	156.50
13:58	93.20
13:59	82.10
14:00	62.70
14:01	41.00
14:02	21.10
14:03	61.20
14:04	38.90
14:05	15.50
14:06	14.30
14:07	18.40
14:08	67.00
14:09	219.80
14:10	53.30
14:11	35.40
14:12	27.00
14:13	22.70
14:14	24.80
14:15	75.80
14:16	92.40
14:17	33.10
14:18	22.70
14:19	24.10
14:20	22.40
14:21	40.90
14:22	54.10
14:23	34.70
14:24	37.60
14:25	97.60
14:26	47.40
14:27	53.00
14:28	120.80
14:29	79.30
14:30	43.70
14:31	43.90
14:32	59.40
14:33	166.00
14:34	54.60
14:35	80.40
14:36	65.30
14:37	39.30
14:38	72.70
14:39	50.70
14:40	50.40
14:41	43.80
14:42	33.00
14:43	58.60
14:44	114.30
Average	**60.00**
Min	14.30
Max	312.00

© Mostardi Platt

Client: Metal Management Midwest, Inc.
Facility: Paulina Street Facility
Project #: M193411
Operating Condition: Normal

Test Location: Shredder Emissions
Date: 9/20/2019
Operator: R. Sollars
FTIR s/n: 017613963

Run 1

Spectrum	Date	Time	H2O% %v	CO2% %v	CH4 ppmv wet	Ethane ppmv wet
RUN1_0237.LAB	9/20/19	9:00:09	3.7	0.1	2.8	1.7
RUN1_0238.LAB	9/20/19	9:01:09	3.5	0.1	2.7	2.2
RUN1_0239.LAB	9/20/19	9:02:09	3.5	0.1	2.7	1.8
RUN1_0240.LAB	9/20/19	9:03:09	3.6	0.1	2.7	0.9
RUN1_0241.LAB	9/20/19	9:04:10	3.7	0.1	2.5	0.3
RUN1_0242.LAB	9/20/19	9:05:09	3.5	0.1	2.5	0.9
RUN1_0243.LAB	9/20/19	9:06:09	3.7	0.1	2.6	0.9
RUN1_0244.LAB	9/20/19	9:07:10	3.8	0.1	2.7	0.7
RUN1_0245.LAB	9/20/19	9:08:10	4.0	0.1	2.7	0.9
RUN1_0246.LAB	9/20/19	9:09:10	3.9	0.1	2.5	0.6
RUN1_0247.LAB	9/20/19	9:10:10	3.7	0.1	2.5	1.3
RUN1_0248.LAB	9/20/19	9:11:10	3.8	0.1	2.4	1.5
RUN1_0249.LAB	9/20/19	9:12:10	3.9	0.1	2.3	5.0
RUN1_0250.LAB	9/20/19	9:13:10	4.1	0.1	2.6	2.9
RUN1_0251.LAB	9/20/19	9:14:10	4.3	0.1	2.6	1.8
RUN1_0252.LAB	9/20/19	9:15:10	4.0	0.1	2.4	0.6
RUN1_0253.LAB	9/20/19	9:16:10	3.8	0.1	2.5	1.1
RUN1_0254.LAB	9/20/19	9:17:10	4.0	0.1	2.7	1.7
RUN1_0255.LAB	9/20/19	9:18:10	4.0	0.1	2.5	1.4
RUN1_0256.LAB	9/20/19	9:19:10	4.0	0.1	2.4	2.4
RUN1_0257.LAB	9/20/19	9:20:10	4.1	0.1	2.3	2.1
RUN1_0258.LAB	9/20/19	9:21:10	4.4	0.1	2.3	0.7
RUN1_0259.LAB	9/20/19	9:22:10	3.6	0.1	2.2	0.6
RUN1_0260.LAB	9/20/19	9:23:10	3.8	0.1	2.5	1.2
RUN1_0261.LAB	9/20/19	9:24:10	3.9	0.1	2.7	1.9
RUN1_0262.LAB	9/20/19	9:25:10	4.0	0.1	2.5	1.5
RUN1_0263.LAB	9/20/19	9:26:10	4.2	0.1	2.5	1.0
RUN1_0264.LAB	9/20/19	9:27:10	4.2	0.1	2.4	0.8
RUN1_0265.LAB	9/20/19	9:28:10	4.2	0.1	2.6	1.5
RUN1_0266.LAB	9/20/19	9:29:10	4.2	0.1	2.4	1.1
RUN1_0267.LAB	9/20/19	9:30:10	4.3	0.1	2.5	0.6
RUN1_0268.LAB	9/20/19	9:31:10	4.3	0.1	2.5	0.7
RUN1_0269.LAB	9/20/19	9:32:10	4.1	0.1	2.4	1.5
RUN1_0270.LAB	9/20/19	9:33:10	4.1	0.1	2.5	1.8
RUN1_0271.LAB	9/20/19	9:34:10	4.1	0.1	2.5	1.3
RUN1_0272.LAB	9/20/19	9:35:10	4.1	0.1	2.4	0.5
RUN1_0273.LAB	9/20/19	9:36:10	4.0	0.1	2.6	1.4
RUN1_0274.LAB	9/20/19	9:37:10	4.2	0.1	2.6	1.0
RUN1_0275.LAB	9/20/19	9:38:10	4.2	0.1	2.4	0.5
RUN1_0276.LAB	9/20/19	9:39:10	4.1	0.1	2.4	1.1
RUN1_0277.LAB	9/20/19	9:40:10	4.0	0.1	2.6	0.8
RUN1_0278.LAB	9/20/19	9:41:10	4.5	0.1	2.7	0.9
RUN1_0279.LAB	9/20/19	9:42:10	4.4	0.1	2.9	0.6
RUN1_0280.LAB	9/20/19	9:43:10	4.1	0.1	2.6	0.3
RUN1_0281.LAB	9/20/19	9:44:10	4.2	0.1	2.5	0.4
RUN1_0282.LAB	9/20/19	9:45:10	4.0	0.1	2.7	0.7
RUN1_0283.LAB	9/20/19	9:46:10	4.0	0.1	2.6	1.4
RUN1_0284.LAB	9/20/19	9:47:10	4.2	0.1	2.8	0.9
RUN1_0285.LAB	9/20/19	9:48:10	4.5	0.1	2.5	0.3
RUN1_0286.LAB	9/20/19	9:49:10	4.0	0.1	2.5	0.7
RUN1_0287.LAB	9/20/19	9:50:10	4.0	0.1	2.5	1.0
RUN1_0288.LAB	9/20/19	9:51:10	3.9	0.1	2.5	0.5
RUN1_0289.LAB	9/20/19	9:52:10	4.3	0.1	2.7	1.5
RUN1_0290.LAB	9/20/19	9:53:10	4.6	0.1	2.4	0.4
RUN1_0291.LAB	9/20/19	9:54:10	3.8	0.1	2.6	1.2
RUN1_0292.LAB	9/20/19	9:55:10	3.9	0.1	2.8	0.4
RUN1_0293.LAB	9/20/19	9:56:10	4.4	0.1	2.8	0.7
RUN1_0294.LAB	9/20/19	9:57:10	4.4	0.1	2.6	0.8
RUN1_0295.LAB	9/20/19	9:58:10	4.4	0.1	2.7	0.5
RUN1_0296.LAB	9/20/19	9:59:10	4.1	0.1	3.2	2.0
Average			**4.0**	**0.1**	**2.6**	**1.1**

© Mostardi Platt

Client: Metal Management Midwest, Inc.
Facility: Paulina Street Facility
Project #: M193411
Operating Condition: Normal

Test Location: Shredder Emissions
Date: 9/20/2019
Operator: R. Sollars
FTIR s/n: 017613963

Run 2

Spectrum	Date	Time	H2O% %v	CO2% %v	CH4 ppmv wet	Ethane ppmv wet
RUN2_0430.LAB	9/20/19	11:40:33	4.7	0.1	2.8	1.7
RUN2_0431.LAB	9/20/19	11:41:32	4.8	0.1	2.4	1.5
RUN2_0432.LAB	9/20/19	11:42:32	4.8	0.1	2.4	1.0
RUN2_0433.LAB	9/20/19	11:43:33	4.2	0.1	2.3	1.7
RUN2_0434.LAB	9/20/19	11:44:32	4.6	0.1	2.3	2.9
RUN2_0435.LAB	9/20/19	11:45:32	5.2	0.1	2.2	1.6
RUN2_0436.LAB	9/20/19	11:46:33	4.7	0.1	2.0	0.7
RUN2_0437.LAB	9/20/19	11:47:33	4.1	0.1	2.1	2.3
RUN2_0438.LAB	9/20/19	11:48:32	4.2	0.1	2.3	1.7
RUN2_0439.LAB	9/20/19	11:49:33	4.7	0.1	2.1	0.6
RUN2_0440.LAB	9/20/19	11:50:32	4.0	0.1	2.1	1.0
RUN2_0441.LAB	9/20/19	11:51:32	3.9	0.1	2.2	1.7
RUN2_0442.LAB	9/20/19	11:52:32	3.6	0.1	2.3	1.2
RUN2_0443.LAB	9/20/19	11:53:32	4.2	0.1	2.2	1.7
RUN2_0444.LAB	9/20/19	11:54:33	4.4	0.1	2.3	1.6
RUN2_0445.LAB	9/20/19	11:55:32	4.2	0.1	2.4	2.2
RUN2_0446.LAB	9/20/19	11:56:32	4.1	0.1	2.5	0.8
RUN2_0447.LAB	9/20/19	11:57:33	4.2	0.1	2.2	1.7
RUN2_0448.LAB	9/20/19	11:58:32	4.0	0.1	2.5	3.0
RUN2_0449.LAB	9/20/19	11:59:32	4.2	0.1	2.4	1.8
RUN2_0450.LAB	9/20/19	12:00:33	4.3	0.1	2.7	1.3
RUN2_0451.LAB	9/20/19	12:01:33	4.4	0.1	2.6	3.2
RUN2_0452.LAB	9/20/19	12:02:33	4.6	0.1	2.3	2.4
RUN2_0453.LAB	9/20/19	12:03:33	4.2	0.1	2.2	2.0
RUN2_0454.LAB	9/20/19	12:04:33	4.3	0.1	2.5	7.5
RUN2_0455.LAB	9/20/19	12:05:33	4.3	0.1	2.4	3.3
RUN2_0456.LAB	9/20/19	12:06:33	4.2	0.1	2.4	1.3
RUN2_0457.LAB	9/20/19	12:07:33	4.3	0.1	2.2	2.5
RUN2_0458.LAB	9/20/19	12:08:33	4.1	0.1	2.1	1.9
RUN2_0459.LAB	9/20/19	12:09:33	4.8	0.1	2.4	1.4
RUN2_0460.LAB	9/20/19	12:10:33	4.8	0.1	2.5	3.3
RUN2_0461.LAB	9/20/19	12:11:33	4.9	0.1	2.5	1.6
RUN2_0462.LAB	9/20/19	12:12:33	4.9	0.1	2.2	-0.4
RUN2_0463.LAB	9/20/19	12:13:33	4.7	0.1	2.2	0.0
RUN2_0464.LAB	9/20/19	12:14:33	4.6	0.1	2.2	1.0
RUN2_0465.LAB	9/20/19	12:15:33	4.5	0.1	2.2	1.9
RUN2_0466.LAB	9/20/19	12:16:33	4.3	0.1	2.4	1.8
RUN2_0467.LAB	9/20/19	12:17:33	4.3	0.1	2.2	1.8
RUN2_0468.LAB	9/20/19	12:18:33	4.6	0.1	2.3	1.2
RUN2_0469.LAB	9/20/19	12:19:33	4.4	0.1	2.3	4.2
RUN2_0470.LAB	9/20/19	12:20:33	4.5	0.1	2.3	1.9
RUN2_0471.LAB	9/20/19	12:21:33	4.5	0.1	2.1	1.1
RUN2_0472.LAB	9/20/19	12:22:33	4.8	0.1	2.2	2.0
RUN2_0473.LAB	9/20/19	12:23:33	4.5	0.1	2.3	2.0
RUN2_0474.LAB	9/20/19	12:24:33	4.3	0.1	2.2	1.6
RUN2_0475.LAB	9/20/19	12:25:33	4.4	0.1	2.1	5.4
RUN2_0476.LAB	9/20/19	12:26:33	4.4	0.1	2.2	1.9
RUN2_0477.LAB	9/20/19	12:27:33	4.5	0.1	2.3	2.7
RUN2_0478.LAB	9/20/19	12:28:33	4.2	0.1	2.3	1.0
RUN2_0479.LAB	9/20/19	12:29:33	4.6	0.1	2.5	2.2
RUN2_0480.LAB	9/20/19	12:30:33	4.5	0.1	2.4	2.6
RUN2_0481.LAB	9/20/19	12:31:33	4.6	0.1	2.3	2.4
RUN2_0482.LAB	9/20/19	12:32:33	4.6	0.1	2.4	1.4
RUN2_0483.LAB	9/20/19	12:33:33	4.7	0.1	2.3	1.9
RUN2_0484.LAB	9/20/19	12:34:33	4.6	0.1	2.2	1.7
RUN2_0485.LAB	9/20/19	12:35:33	4.5	0.1	2.2	1.4
RUN2_0486.LAB	9/20/19	12:36:33	4.3	0.1	2.2	1.0
RUN2_0487.LAB	9/20/19	12:37:33	4.1	0.1	2.2	0.6
RUN2_0488.LAB	9/20/19	12:38:33	4.3	0.1	2.1	1.1
RUN2_0489.LAB	9/20/19	12:39:33	4.3	0.1	2.1	0.9
Average			**4.4**	**0.1**	**2.3**	**1.9**

© Mostardi Platt

Client: Metal Management Midwest, Inc.
Facility: Paulina Street Facility
Project #: M193411
Operating Condition: Normal

Test Location: Shredder Emissions
Date: 9/20/2019
Operator: R. Sollars
FTIR s/n: 017613963

Run 3

Spectrum	Date	Time	H2O% %v	CO2% %v	CH4 ppmv wet	Ethane ppmv wet
RUN3_0590.LAB	9/20/19	13:45:24	3.9	0.1	2.4	1.1
RUN3_0591.LAB	9/20/19	13:46:24	3.7	0.1	2.2	0.8
RUN3_0592.LAB	9/20/19	13:47:24	3.9	0.1	2.4	1.0
RUN3_0593.LAB	9/20/19	13:48:24	3.8	0.1	2.3	0.5
RUN3_0594.LAB	9/20/19	13:49:24	4.1	0.1	2.4	0.5
RUN3_0595.LAB	9/20/19	13:50:24	3.8	0.1	2.4	0.6
RUN3_0596.LAB	9/20/19	13:51:24	3.8	0.1	2.7	2.5
RUN3_0597.LAB	9/20/19	13:52:24	4.0	0.1	2.4	0.6
RUN3_0598.LAB	9/20/19	13:53:24	4.1	0.1	2.4	0.4
RUN3_0599.LAB	9/20/19	13:54:24	4.1	0.1	2.4	3.4
RUN3_0600.LAB	9/20/19	13:55:24	3.9	0.1	2.5	1.2
RUN3_0601.LAB	9/20/19	13:56:24	4.2	0.1	2.4	1.2
RUN3_0602.LAB	9/20/19	13:57:24	4.1	0.1	2.4	0.8
RUN3_0603.LAB	9/20/19	13:58:24	4.4	0.1	1.2	10.5
RUN3_0604.LAB	9/20/19	13:59:24	3.9	0.1	0.6	14.6
RUN3_0605.LAB	9/20/19	14:00:24	3.9	0.1	2.2	3.3
RUN3_0606.LAB	9/20/19	14:01:24	3.7	0.1	2.2	1.9
RUN3_0607.LAB	9/20/19	14:02:24	3.8	0.1	2.3	1.9
RUN3_0608.LAB	9/20/19	14:03:24	4.1	0.1	2.3	1.6
RUN3_0609.LAB	9/20/19	14:04:24	4.1	0.1	2.3	0.4
RUN3_0610.LAB	9/20/19	14:05:24	3.9	0.1	2.3	1.6
RUN3_0611.LAB	9/20/19	14:06:24	4.3	0.1	2.4	1.3
RUN3_0612.LAB	9/20/19	14:07:24	3.8	0.1	2.3	0.4
RUN3_0613.LAB	9/20/19	14:08:24	4.1	0.1	2.3	0.3
RUN3_0614.LAB	9/20/19	14:09:24	3.9	0.1	2.2	0.4
RUN3_0615.LAB	9/20/19	14:10:24	4.0	0.1	2.4	1.9
RUN3_0616.LAB	9/20/19	14:11:24	4.1	0.1	2.4	0.2
RUN3_0617.LAB	9/20/19	14:12:24	3.9	0.1	2.3	0.5
RUN3_0618.LAB	9/20/19	14:13:24	3.9	0.1	2.4	1.1
RUN3_0619.LAB	9/20/19	14:14:24	4.1	0.1	2.3	0.7
RUN3_0620.LAB	9/20/19	14:15:24	4.0	0.1	2.2	0.9
RUN3_0621.LAB	9/20/19	14:16:24	3.9	0.1	2.3	0.5
RUN3_0622.LAB	9/20/19	14:17:24	4.0	0.1	2.2	0.5
RUN3_0623.LAB	9/20/19	14:18:24	4.4	0.1	2.6	2.7
RUN3_0624.LAB	9/20/19	14:19:25	4.0	0.1	2.3	0.6
RUN3_0625.LAB	9/20/19	14:20:24	4.2	0.1	2.3	0.5
RUN3_0626.LAB	9/20/19	14:21:24	3.9	0.1	2.2	0.7
RUN3_0627.LAB	9/20/19	14:22:24	3.9	0.1	2.4	0.6
RUN3_0628.LAB	9/20/19	14:23:24	4.0	0.1	2.4	0.6
RUN3_0629.LAB	9/20/19	14:24:24	3.8	0.1	2.4	1.3
RUN3_0630.LAB	9/20/19	14:25:24	4.1	0.1	2.5	0.9
RUN3_0631.LAB	9/20/19	14:26:24	3.9	0.1	2.4	1.0
RUN3_0632.LAB	9/20/19	14:27:24	4.3	0.1	2.4	4.3
RUN3_0633.LAB	9/20/19	14:28:24	4.2	0.1	2.3	1.0
RUN3_0634.LAB	9/20/19	14:29:25	4.1	0.1	2.4	1.3
RUN3_0635.LAB	9/20/19	14:30:25	4.1	0.1	2.4	5.1
RUN3_0636.LAB	9/20/19	14:31:25	4.2	0.1	2.4	2.9
RUN3_0637.LAB	9/20/19	14:32:24	4.1	0.1	3.4	1.6
RUN3_0638.LAB	9/20/19	14:33:24	3.9	0.1	2.5	1.4
RUN3_0639.LAB	9/20/19	14:34:24	4.1	0.1	2.4	1.7
RUN3_0640.LAB	9/20/19	14:35:24	4.0	0.1	2.3	6.3
RUN3_0641.LAB	9/20/19	14:36:24	4.2	0.1	2.3	2.2
RUN3_0642.LAB	9/20/19	14:37:24	3.9	0.1	2.3	1.5
RUN3_0643.LAB	9/20/19	14:38:24	4.0	0.1	2.3	1.6
RUN3_0644.LAB	9/20/19	14:39:24	4.3	0.1	2.3	0.9
RUN3_0645.LAB	9/20/19	14:40:24	4.2	0.1	2.2	1.8
RUN3_0646.LAB	9/20/19	14:41:25	4.2	0.1	2.3	1.5
RUN3_0647.LAB	9/20/19	14:42:25	4.1	0.1	2.4	1.4
RUN3_0648.LAB	9/20/19	14:43:24	4.2	0.1	2.3	1.1
RUN3_0649.LAB	9/20/19	14:44:24	4.2	0.1	2.4	0.8
Average			**4.0**	**0.1**	**2.3**	**1.8**

© Mostardi Platt

Metal Management Midwest, Inc. Paulina Street Facility Shredder Emissions Methane and Ethane Summary							
Test No.	**Date**	**Start Time**	**End Time**	**H_2O%**	**CO2%**	**CH4 ppmv wet**	**Ethane ppmv wet**
1	09/20/19	9:00	9:58	4.04	0.07	2.55	1.13
2	09/20/19	11:40	12:37	4.43	0.07	2.30	1.90
3	09/20/19	13:45	14:42	4.02	0.08	2.32	1.80
Average				4.16	0.07	2.39	1.61

© Mostardi Platt

Client:	Metal Management Midwest, Inc.	
Facility:	Paulina Street Facility	
Test Location:	Shredder Emissions	
Project #:	M193411	
Test Method:	2	
Test Engineer:	JJC	
Test Technician:	DPP1	
Type of Fuel Firing:	Natural Gas	
Temp ID:	CM31	
Meter ID:	CM31	
Pitot ID:	320	
Pitot Type:	S-Type	
Pitot Tube Coefficient:	0.840	
Probe Length:	6.0	**ft**
Sample Plane:	Horizontal	
Port Length:	1.00	**in.**
Port Size (diameter):	4.50	**in.**
Port Type:	Hole in duct	
Duct Shape:	Circular	
Diameter:	4.167	**ft**
Duct Area:	13.64	**Sq. Ft.**
Upstream Diameters:	1.400	
Downstream Diameters:	4.500	
Number of Ports Sampled:	2	
Number of Points per Port:	8	
Total Number of Traverse Points:	16	

© Mostardi Platt

METHOD 2 VOLUMETRIC FLOW DATA

Project Number:	M193411	**Operating Level:**	Normal		
Client:	Metal Management Midwest, Inc.	**Run No.:**	Pre 1		
Facility:	Paulina Street Facility	**Test Date:**	9/20/2019		
Test Location:	Shredder Emissions	**Start Time:**	8:36		
Pitot ID:	320	**End Time:**	8:41		
Pitot Coefficient:	0.840	**Test Engineer:**	JJC	**Test Tech:**	DPP1
Probe Length, Feet:	6	**Port Length, Inches:**	1		

Port	Point	DP (in. H_2O)	Sqrt. DP	Temp (^oF)	Velocity (V)	Port	Point	DP (in. H_2O)	Sqrt. DP	Temp (^oF)	Velocity (V)
A	**1**	1.10	1.0488	82.0	60.62	**B**	**1**	1.00	1.0000	82.0	57.80
A	**2**	1.40	1.1832	82.0	68.39	**B**	**2**	1.30	1.1402	82.0	65.90
A	**3**	1.40	1.1832	82.0	68.39	**B**	**3**	1.50	1.2247	82.0	70.79
A	**4**	1.20	1.0954	82.0	63.32	**B**	**4**	1.30	1.1402	82.0	65.90
A	**5**	1.30	1.1402	82.0	65.90	**B**	**5**	1.30	1.1402	82.0	65.90
A	**6**	1.00	1.0000	82.0	57.80	**B**	**6**	1.20	1.0954	82.0	63.32
A	**7**	0.94	0.9695	82.0	56.04	**B**	**7**	1.00	1.0000	82.0	57.80
A	**8**	0.82	0.9055	82.0	52.34	**B**	**8**	0.80	0.8944	82.0	51.70

Test Parameters

P_{bar} - Barometric pressure, inches Hg	29.49	% CO_2	0.00	
P_g - Stack Pressure, inches of H_2O	-3.00	% O_2	20.00	
P_s - Absolute stack pressure, inches Hg	29.27	% N_2	80.00	
t_s - Average stack temperature, ^oF	82.0	Md - dry basis lb/lb mole	28.80	
Duct Shape:	Circular	Ms - wet basis lb/lb mole	28.584	
Diameter, Feet	4.167	Wet Bulb Temp(t'):		
		Dry Bulb Temp(t'):	82	
		Bws - Moisture content fraction		**0.020**
Cross Sectional Area of Stack, Ft^2	13.64	Moisture determined by wb/db?		Y
				0.038

Method 2 Results

Average DP	1.1600	Q - ACFM	50,736
Average Sqrt DP	1.0726	Qsd - DSCFM	47,384
Average Velocity Vs (ft/sec)	61.994	Qs - SCFM	48,351
		Qs - SCFH	2,901,044

© Mostardi Platt

METHOD 2 VOLUMETRIC FLOW DATA

Project Number:	M193411	**Operating Level:**	Normal		
Client:	Metal Management Midwest, Inc.	**Run No.:**	Post 1/Pre 2		
Facility:	Paulina Street Facility	**Test Date:**	9/20/2019		
Test Location:	Shredder Emissions	**Start Time:**	11:06		
Pitot ID:	320	**End Time:**	11:11		
Pitot Coefficient:	0.840	**Test Engineer:**	JJC	**Test Tech:**	DPP1
Probe Length, Feet:	6	**Port Length, Inches:**	1		

Port	Point	DP (in. H_2O)	Sqrt. DP	Temp (^oF)	Velocity (V)	Port	Point	DP (in. H_2O)	Sqrt. DP	Temp (^oF)	Velocity (V)
A	**1**	0.90	0.9487	86.0	55.00	**B**	**1**	0.88	0.9381	87.0	54.44
A	**2**	1.10	1.0488	86.0	60.81	**B**	**2**	0.82	0.9055	87.0	52.55
A	**3**	1.30	1.1402	86.0	66.10	**B**	**3**	1.10	1.0488	87.0	60.86
A	**4**	1.40	1.1832	86.0	68.60	**B**	**4**	0.92	0.9592	87.0	55.66
A	**5**	1.20	1.0954	86.0	63.51	**B**	**5**	1.30	1.1402	87.0	66.16
A	**6**	1.20	1.0954	86.0	63.51	**B**	**6**	1.20	1.0954	87.0	63.57
A	**7**	1.10	1.0488	86.0	60.81	**B**	**7**	0.90	0.9487	87.0	55.05
A	**8**	0.69	0.8307	86.0	48.16	**B**	**8**	0.88	0.9381	87.0	54.44

Test Parameters

P_{bar} - Barometric pressure, inches Hg	29.49	% CO_2	0.00	
P_g - Stack Pressure, inches of H_2O	-3.00	% O_2	20.90	
P_s - Absolute stack pressure, inches Hg	29.27	% N_2	79.10	
t_s - Average stack temperature, ^oF	86.5	Md - dry basis lb/lb mole	28.84	
Duct Shape:	Circular	Ms - wet basis lb/lb mole	28.619	
Diameter, Feet	4.167	Wet Bulb Temp(t'):		
		Dry Bulb Temp(t'):	87	
		Bws - Moisture content fraction		**0.020**
Cross Sectional Area of Stack, Ft^2	13.64	Moisture determined by wb/db?		Y
				0.043

Method 2 Results

Average DP	1.0556	Q - ACFM	48,554
Average Sqrt DP	1.0228	Qsd - DSCFM	44,972
Average Velocity Vs (ft/sec)	59.327	Qs - SCFM	45,890
		Qs - SCFH	2,753,395

© Mostardi Platt

METHOD 2 VOLUMETRIC FLOW DATA

Project Number:	M193411	**Operating Level:**	Normal		
Client:	Metal Management Midwest, Inc.	**Run No.:**	Post 2/Pre 3		
Facility:	Paulina Street Facility	**Test Date:**	9/20/2019		
Test Location:	Shredder Emissions	**Start Time:**	13:35		
Pitot ID:	320	**End Time:**	13:39		
Pitot Coefficient:	0.840	**Test Engineer:**	JJC	**Test Tech:**	DPP1
Probe Length, Feet:	6	**Port Length, Inches:**	1		

Port	Point	DP (in. H_2O)	Sqrt. DP	Temp (^oF)	Velocity (V)	Port	Point	DP (in. H_2O)	Sqrt. DP	Temp (^oF)	Velocity (V)
A	**1**	1.00	1.0000	96.0	58.51	**B**	**1**	0.86	0.9274	96.0	54.26
A	**2**	1.10	1.0488	96.0	61.36	**B**	**2**	1.00	1.0000	96.0	58.51
A	**3**	1.20	1.0954	96.0	64.09	**B**	**3**	1.00	1.0000	96.0	58.51
A	**4**	1.30	1.1402	96.0	66.71	**B**	**4**	1.10	1.0488	96.0	61.36
A	**5**	1.50	1.2247	96.0	71.65	**B**	**5**	1.20	1.0954	96.0	64.09
A	**6**	1.10	1.0488	96.0	61.36	**B**	**6**	1.20	1.0954	96.0	64.09
A	**7**	0.80	0.8944	96.0	52.33	**B**	**7**	1.00	1.0000	96.0	58.51
A	**8**	0.46	0.6782	96.0	39.68	**B**	**8**	0.79	0.8888	96.0	52.00

Test Parameters

P_{bar} - Barometric pressure, inches Hg	29.49	% CO_2	0.00	
P_g - Stack Pressure, inches of H_2O	-3.00	% O_2	20.90	
P_s - Absolute stack pressure, inches Hg	29.27	% N_2	79.10	
t_s - Average stack temperature, ^oF	96.0	Md - dry basis lb/lb mole	28.84	
Duct Shape:	Circular	Ms - wet basis lb/lb mole	28.619	
Diameter, Feet	4.167	Wet Bulb Temp(t'):		
		Dry Bulb Temp(t'):	96	
		Bws - Moisture content fraction		**0.020**
Cross Sectional Area of Stack, Ft^2	13.64	Moisture determined by wb/db?		Y
				0.058

Method 2 Results

Average DP	1.0381	Q - ACFM	48,439
Average Sqrt DP	1.0117	Qsd - DSCFM	44,099
Average Velocity Vs (ft/sec)	59.187	Qs - SCFM	44,999
		Qs - SCFH	2,699,962

© Mostardi Platt

METHOD 2 VOLUMETRIC FLOW DATA

Project Number:	M193411	**Operating Level:**	Normal		
Client:	Metal Management Midwest, Inc.	**Run No.:**	Post 3/Pre 4		
Facility:	Paulina Street Facility	**Test Date:**	9/20/2019		
Test Location:	Shredder Emissions	**Start Time:**	15:20		
Pitot ID:	320	**End Time:**	15:26		
Pitot Coefficient:	0.840	**Test Engineer:**	JJC	**Test Tech:**	DPP1
Probe Length, Feet:	6	**Port Length, Inches:**	1		

Port	Point	DP (in. H_2O)	Sqrt. DP	Temp (^oF)	Velocity (V)	Port	Point	DP (in. H_2O)	Sqrt. DP	Temp (^oF)	Velocity (V)
A	**1**	0.51	0.7141	94.0	41.71	**B**	**1**	0.48	0.6928	93.0	40.42
A	**2**	0.63	0.7937	93.0	46.31	**B**	**2**	0.51	0.7141	93.0	41.67
A	**3**	0.67	0.8185	93.0	47.76	**B**	**3**	0.60	0.7746	93.0	45.20
A	**4**	0.69	0.8307	93.0	48.47	**B**	**4**	0.63	0.7937	93.0	46.31
A	**5**	0.71	0.8426	93.0	49.16	**B**	**5**	0.69	0.8307	92.0	48.42
A	**6**	0.71	0.8426	93.0	49.16	**B**	**6**	0.69	0.8307	92.0	48.42
A	**7**	0.60	0.7746	92.0	45.15	**B**	**7**	0.65	0.8062	92.0	47.00
A	**8**	0.64	0.8000	92.0	46.64	**B**	**8**	0.75	0.8660	93.0	50.53

Test Parameters

P_{bar} - Barometric pressure, inches Hg	29.49	% CO_2	0.00	
P_g - Stack Pressure, inches of H_2O	-3.00	% O_2	20.90	
P_s - Absolute stack pressure, inches Hg	29.27	% N_2	79.10	
t_s - Average stack temperature, ^oF	92.8	Md - dry basis lb/lb mole	28.84	
Duct Shape:	Circular	Ms - wet basis lb/lb mole	28.619	
Diameter, Feet	4.167	Wet Bulb Temp(t'):		
		Dry Bulb Temp(t'):	93	
		Bws - Moisture content fraction		**0.020**
Cross Sectional Area of Stack, Ft^2	13.64	Moisture determined by wb/db?		Y
				0.053

Method 2 Results

Average DP	0.6350	Q - ACFM	37,971
Average Sqrt DP	0.7954	Qsd - DSCFM	34,772
Average Velocity Vs (ft/sec)	46.397	Qs - SCFM	35,482
		Qs - SCFH	2,128,926

© Mostardi Platt

Appendix G - Field Data Sheets

© Mostardi Platt

Isokinetic Sampling Cover Sheet

Test Engineer: JSC
Test Technician: KJDI

Plant Information

Run Number: 1
Test Location: Crusher Exhaust
Duct Shape: Circular or Rectangular
Flue Area: 18.857
Port Type: nipple
Test Method: 5/202

Date: 9/20/19
Client Name: Sims Metal Mgmt.
Length: — Width: — or Diameter: 4.9
Upstream Diameters: 5.~~0~~ 4.5
Port Length: 1
Source Condition: 50 Hz

Project Number: M193411
Plant Name: Sims Metal Mgmt. Chicago
Downstream Diameters: 1.4
Port Diameter: 4.5

Meter and Probe Data

Meter ID: (M3)
Pitot ID: 120
Nozzle Kit ID: Teflon 11
Probe Length: 6
Pre-Test Nozzle Leak Check: .000 @ 15 "Hg
Pre-Test Pitot Leak Check: .000 @ 4V0 "H_2O

Meter Y Value: .998
Pitot Coefficient: .84
Nozzle Diameter: ~~.247~~ .174
Probe Liner: Glass

ΔH Value: 1.903
Train Type: Hot Box
Filter Number/Weight: 13926 / .45002
Thimble Number/Weight:
Post-Test Nozzle Leak Check: .000 @ 10 "Hg
Post-Test Pitot Leak Check: .000 @ 3.6 "H_2O

Traverse Data

Ports Sampled: 2
Total Points: 16

Points/Port: 8
Total Test Time: 64

Min/Point: 4
Sample Plane: Horizontal or Vertical

Stack Parameters

Barometric Pressure: 29.46
CO_2 %: ___/___/___/ Avg.___
Imp and/or silica balance Model and S/N:
Initial Imp. Volume or Weight:
Initial Silica Weight:

Static Pressure: -3
O_2 %: ___/___/___/Avg.___
Servomex Serial #:
Final Imp. Volume or Weight:
Final Silica Weight:

Determined by: Method 3 or Method 3A
Imp. Volume or Weight Gain:
Silica Weight Gain:

Comments:

© Mostardi Platt

Isokinetic Sampling Field Data Sheet-M202

Project Number: M193411 | Date: 9/20/19 | Test Number: 1

Client: Sims Metal Mgmt. | Test Location: Crusher Exhaust | Operator: JJC | Test Tech: KJDI

Plant: Sims Metal Mgmt - Chicago | Test Method: 5 /202 | Page Number: 1 of 1

$R_1 = 1.029$ K=0.561 x3

Port-Point #.	Time	(ΔP)	Orifice Setting (ΔH)	Meter Volume (V_m) ft^3, Actual	Square Root, ΔP	Meter Rate, Cubic Feet/ Min.	Theoretical Meter Volume, (V_m) ft^3, per point	Theoretical Meter Volume, (V_m) ft^3, total	Stack Temp, °F	Meter Temp Inlet, °F	Meter Temp Outlet, °F	Pump Vacuum, " Hg	Probe Temp. °F (248 ± 25)	Filter Temp. °F	Impinger Outlet Well Temp °F (max 68)	CPM Filter Temp. °F (69-85)
1-1	9:00	.90	.93	921.002	.94	.53	1.59	—	86	83	81	2.0	250	252	66	82
1-2	9:03	.70	.72	922.590	.83	.45	1.41	922.59	88	83	82	2.0	249	252	66	83
1-3	9:06	.65	.66	924.52	.80	.45	1.35	923.99	88	84	82	2.0	250	255	65	84
1-4	9:09	.60	.62	925.870	.77	.43	1.30	925.34	88	84	83	2.0	251	255	64	85
1-5	9:12	.82	.84	926.66	.90	.50	1.52	926.64	89	85	84	2.0	253	255	63	85
1-6	9:15	.80	.82	928.19	.89	.50	1.50	928.16	89	85	84	2.0	254	257	63	85
1-7	9:18	.79	.81	929.7	.88	.49	1.49	929.66	89	86	85	2.0	255	256	62	85
1-8	9:21	.77	.80	931.19	.87	.49	1.47	931.15	89	87	85	2.0	254	255	62	84
1-9	9:24	.76	.78	932.68	.87	.48	1.46	932.62	90	88	86	2.0	256	255	61	83
1-10	9:27	.82	.84	934.15	.90	.50	1.52	934.08	90	89	86	2.0	254	254	62	83
1-11	9:30	.79	.82	935.68	.88	.49	1.49	935.60	90	91	86	2.0	254	255	61	83
1-12	9:33	.76	.79	937.18	.87	.48	1.46	937.09	90	91	87	2.0	253	255	62	83
—	9:36	—	—	938.663	—	—	—	938.55	—	—	—	—	—	—	—	—
2-1	9:50	.81	.84	938.663	.90	.50	1.51	—	89	91	86	2.0	252	251	60	82
2-2	9:53	.77	.80	940.16	.87	.49	1.47	940.06	89	92	93	2.0	252	251	61	81
2-3	9:56	.75	.78	941.66	.86	.48	1.45	941.53	86	92	88	2.0	253	254	61	82
2-4	9:59	.52	.54	943.14	.72	.40	1.21	942.98	86	93	88	2.0	254	254	62	83
2-5	10:02	.51	.53	944.37	.71	.40	1.20	944.19	88	93	89	2.0	249	250	63	82
2-6	10:05	.52	.54	945.59	.72	.40	1.21	945.39	89	93	89	2.0	250	251	63	83
2-7	10:07	.56	.58	946.82	.74	.41	1.25	946.60	89	94	89	2.0	250	250	64	82
2-8	10:11	.53	.55	948.10	.72	.40	1.22	947.85	88	94	89	2.0	251	253	63	82
2-9	10:14	.59	.62	949.33	.76	.43	1.29	949.07	89	94	90	2.0	252	254	62	82
2-10	10:17	.59	.62	950.65	.76	.43	1.29	950.36	88	94	90	2.0	253	249	61	83
2-11	10:20	.39	.41	951.96	.67	.37	1.12	951.65	87	94	90	2.0	255	249	61	83
2-12	10:23	.43	.43	953.10	.65	.36	1.10	952.77	88	93	90	2.0	255	253	61	82
	10:26			954.221				953.87								

© Mostardi Platt

IMPINGER WEIGHT SHEET

PLANT: Sims Metals

UNIT NO: Crusher

LOCATION: Exhaust

DATE: 9/20/19

TEST NO: 1

METHOD: 5/202

WEIGHED/MEASURED BY: EE

BALANCE ID: 810-33

Scale ID Number _____

Scale Calibration Check Date: _____

Scale Calibration Check (see QS-6.05C for procedure)

250 grams 250.1

500 grams 499.9

750 grams 750.1

Circle One:	FINAL WEIGHT MLS / GRAMS		INITIAL WEIGHT MLS / GRAMS		IMPINGER GAIN		IMPINGER CONTENTS
IMPINGER 1	430.7		413.8				
IMPINGER 2	582.0		583.7				
IMPINGER 3	750.2		730.9				
IMPINGER 4	855.7		842.2				
IMPINGER 5							
IMPINGER 6							
IMPINGER 7							
IMPINGER 8							

IMPINGERS _____ FINAL TOTAL _____ INITIAL TOTAL _____ TOTAL IMPINGER GAIN

SILICA _____ FINAL TOTAL _____ INITIAL TOTAL _____ TOTAL SILICA GAIN

© Mostardi Platt

Isokinetic Sampling Cover Sheet

Test Engineer: JJG
Test Technician: KSDI

Plant Information

Run Number: 2
Date: 9/20/19
Project Number: M193411
Test Location: Crusher Exhaust
Client Name: Sims Metal Mgmt.
Plant Name: Sims Metal Mgmt. Chicago
Duct Shape: Circular or Rectangular
Length: — Width: — or Diameter: 4.9
Flue Area: 18.857
Upstream Diameters: 3.5
Downstream Diameters: >2
Port Type: nipple
Port Length: 1
Port Diameter: 4.5
Test Method: 5/202
Source Condition: 50 Hz

Meter and Probe Data

Meter ID: CM31
Meter Y Value: .998
ΔH Value: 1.903
Pitot ID: 120
Pitot Coefficient: .84
Train Type: Hot Box
Nozzle Kit ID: Teflon II
Nozzle Diameter: ~~.247~~ .174
Filter Number/Weight:
Probe Length: 6
Probe Liner: Glass
Thimble Number/Weight: —
Pre-Test Nozzle Leak Check: .000 @ 15 "Hg
Post-Test Nozzle Leak Check: .000 @ 10 "Hg
Pre-Test Pitot Leak Check: .000 @ 4.0 "H_2O
Post-Test Pitot Leak Check: .000 @ 3.6 "H_2O

Traverse Data

Ports Sampled: 2
Points/Port: 8
Min/Point: 4
Total Points: 16
Total Test Time: 64
Sample Plane: Horizontal or Vertical

Stack Parameters

Barometric Pressure: 29.49
Static Pressure: -3
CO_2 %: ___/___/___/ Avg.___
O_2 %: ___/___/___/Avg.___
Determined by: Method 3 or Method 3A
Imp and/or silica balance Model and S/N:
Servomex Serial #:
Initial Imp. Volume or Weight:
Final Imp. Volume or Weight:
Imp. Volume or Weight Gain:
Initial Silica Weight:
Final Silica Weight:
Silica Weight Gain:

Comments:

© Mostardi Platt

Isokinetic Sampling Field Data Sheet-M202

Project Number: M193411 Date: 9/20/19 Test Number: 2

Client: Sims Metal Mgmt. Test Location: Crusher Exhaust Operator: JJC Test Tech: K

Plant: Sims Metal Mgmt - Chicago Test Method: 5 /202 Page Number: 1 of 1

1.029 .561 x3

Port-Point #.	Time	(ΔP)	Orifice Setting (ΔH)	Meter Volume (V_m) ft^3, Actual	Square Root, ΔP	Meter Rate, Cubic Feet/ Min.	Theoretical Meter Volume, (V_m) ft^3, per point	Theoretical Meter Volume, (V_m) ft^3, total	Stack Temp, °F	Meter Temp Inlet, °F	Meter Temp Outlet, °F	Pump Vacuum, " Hg	Probe Temp. °F (248 ± 25)	Filter Temp. °F	Impinger Outlet Well Temp °F (max 68)	CPM Filter Temp. °F (69-85)
1-1	11:30	.87	1.3	961.863	.93	.52	1.57	—	91	92	91	4.0	245	227	62	83
1-2	11:33	.69	.71	962.51	.83	.47	1.40	963.428	91	97	91	3.0	246	230	63	82
1-3	11:36	.76	.78	964.30	.87	.49	1.47	964.83	96	96	93	3.0	248	232	63	83
1-4	11:39	.76	.78	965.64	.87	.49	1.47	966.29	97	96	93	3.0	248	232	64	83
1-5	11:42	.77	.79	967.12	.877	.49	1.48	967.76	97	96	92	3.0	248	231	63	84
1-6	11:45	.78	.80	968.71	.88	.49	1.49	969.23	98	97	93	3.0	252	231	62	82
1-7	11:48	.67	.69	969.94	.67	.46	1.38	970.72	90	97	93	3.0	257	231	63	82
1-8	11:51	.82	.84	971.36	.91	.51	1.52	972.60	92	97	93	3.0	251	230	63	81
1-9	11:54	.81	.83	973.31	.90	.50	1.51	973.62	92	98	93	3.0	250	230	62	82
1-10	11:57	.83	.85	974.85	.91	.51	1.53	975.13	91	98	94	3.0	250	231	62	82
1-11	12:00	.82	.84	976.29	.91	.51	1.52	976.66	92	100	94	3.0	249	230	62	83
1-12	12:03	.86	.88	977.58	.93	.52	1.56	978.18	93	99	94	3.0	248	229	63	84
	12:11			979.74				979.74								
2-1	12:22	.73	.75	979.161	.85	.47	1.43	—	94	98	96	3.0	248	231	63	83
2-2	12:25	.73	.75	980.78	.85	.47	1.43	981.17	94	100	96	3.0	247	231	64	83
2-3	12:28	.72	.74	982.19	.84	.47	1.42	982.60	95	100	96	3.0	247	231	64	82
2-4	12:31	.70	.72	983.56	.83	.46	1.40	984.02	96	101	97	3.0	247	230	65	84
2-5	12:34	.73	.75	984.84	.85	.47	1.43	985.42	97	101	97	3.0	251	230	64	83
2-6	12:37	.79	.81	986.55	.88	.49	1.49	986.85	93	101	97	3.0	251	230	63	84
2-7	12:40	.79	.81	988.08	.88	.49	1.49	988.34	93	102	97	3.0	249	230	62	84
2-8	12:43	.83	.85	989.57	.91	.51	1.53	989.83	93	103	98	3.0	248	229	63	83
2-9	12:46	.68	.69	991.29	.82	.46	1.38	991.36	94	102	98	3.0	249	230	64	83
2-10	12:49	.69	.71	992.53	.83	.46	1.39	992.71	94	102	98	3.0	250	230	63	82
2-11	12:52	.80	.82	993.97	.89	.50	1.50	994.13	93	103	98	3.0	251	230	63	82
2-12	12:55	.81	.83	995.48	.90	.50	1.51	995.63	94	104	98	3.0	250	229	62	81
	12:58			997.93				997.14								

© Mostardi Platt

IMPINGER WEIGHT SHEET

PLANT: Sims Metals

UNIT NO: Crusher

LOCATION: Gilbert

DATE: 9/20/19

TEST NO: 2

METHOD: M5/202

WEIGHED/MEASURED BY: CB

BALANCE ID: 510-33

Scale ID Number _____

Scale Calibration Check Date: _____

Scale Calibration Check (see QS-6.05C for procedure)

250 grams _____

500 grams _____

750 grams _____

Circle One:	FINAL WEIGHT MLS / GRAMS		INITIAL WEIGHT MLS / GRAMS		IMPINGER GAIN		IMPINGER CONTENTS
IMPINGER 1	412.7		415.3				
IMPINGER 2	626.1		629.2				
IMPINGER 3	730.5		715.7				
IMPINGER 4	869.0		852.9				
IMPINGER 5							
IMPINGER 6							
IMPINGER 7							
IMPINGER 8							

IMPINGERS _____ FINAL TOTAL _____ INITIAL TOTAL _____ TOTAL IMPINGER GAIN

SILICA _____ FINAL TOTAL _____ INITIAL TOTAL _____ TOTAL SILICA GAIN

© Mostardi Platt

Isokinetic Sampling Cover Sheet

Test Engineer: JJC
Test Technician: KDD

Plant Information

Run Number: 3
Date: 9/20/19
Project Number: M193411
Test Location: Crusher Exhaust
Client Name: Sims Metal Mgmt.
Plant Name: Sims Metal Mgmt. Chicago
Duct Shape: Circular or Rectangular
Length: — Width: — or Diameter: 4.9
Flue Area: 18.857
Upstream Diameters: >5
Downstream Diameters: >1.4
Port Type: nipple
Port Length: 1
Port Diameter: 4.5
Test Method: 5/202
Source Condition: 50 Hz

Meter and Probe Data

Meter ID: CM31
Meter Y Value: .998
ΔH Value: 1.903
Pitot ID: 120
Pitot Coefficient: .84
Train Type: Hot Box
Nozzle Kit ID: Teflon 11
Nozzle Diameter: ~~.217~~ .174
Filter Number/Weight:
Probe Length: 6
Probe Liner: Glass
Thimble Number/Weight: —
Pre-Test Nozzle Leak Check: .000 @ 15 "Hg
Post-Test Nozzle Leak Check: .000 @ 10 "Hg
Pre-Test Pitot Leak Check: .000 @ 4.0 "H_2O
Post-Test Pitot Leak Check: .000 @ 3.6 "H_2O

Traverse Data

Ports Sampled: 2
Points/Port: 8
Min/Point: 4
Total Points: 16
Total Test Time: 64
Sample Plane: Horizontal or Vertical

Stack Parameters

Barometric Pressure: 29.49
Static Pressure: -3
CO_2 %: ___/___/___/ Avg.___
O_2 %: ___/___/___/Avg.___
Determined by: Method 3 or Method 3A
Imp and/or silica balance Model and S/N: ___
Servomex Serial #: ___
Initial Imp. Volume or Weight: ___
Final Imp. Volume or Weight: ___
Imp. Volume or Weight Gain: ___
Initial Silica Weight: ___
Final Silica Weight: ___
Silica Weight Gain: ___

Comments:

© Mostardi Platt

Isokinetic Sampling Field Data Sheet-M202

Project Number: M193411 | Date: 9/20/19 | Test Number: 3

Client: Sims Metal Mgmt. | Test Location: Crusher Exhaust | Operator: JJC | Test Tech: KJDI

Plant: Sims Metal Mgmt - Chicago | Test Method: 5 /202 | Page Number: 1 of 1

1.029 | .561 x3

	Port-Point #.	Time	(ΔP)	Orifice Setting (ΔH)	447.874 Meter Volume (V_m) ft³, Actual	Square Root, ΔP	Meter Rate, Cubic Feet/Min.	Theoretical Meter Volume, (V_m) ft³, per point	Theoretical Meter Volume, (V_m) ft³, total	Stack Temp, °F	Meter Temp Inlet, °F	Meter Temp Outlet, °F	Pump Vacuum, " Hg	248 ± 25 Probe Temp. °F	Filter Temp. °F	max 68 Impinger Outlet Well Temp °F	69-85 CPM Filter Temp. °F
13:51	1-1	13:50	.91	.93	997.87	.95	.53	1.60		91	102	101	2.0	244	230	64	81
13:54	1-2	~~13:48~~	.88	.90	999.47	.93	.52	1.57	999.48	91	102	101	2.0	244	230	65	80
13:57	1-3	~~13:51~~	.88	.90	1000.24	.93	.52	1.57	1001.05	90	104	101	2.0	245	231	64	80
14:00	1-4	~~13:54~~	.84	.86	1002.68	.91	.51	1.54	1002.63	90	104	101	2.0	246	229	64	81
14:03	1-5	~~13:57~~	.87	.89	1004.25	.95	.53	1.61	1004.17	92	105	101	2.0	248	230	63	81
14:06	1-6	~~14:00~~	.86	.88	1005.84	.92	.52	1.56	1005.78	92	105	102	2.0	249	230	62	82
14:09	1-7	~~14:03~~	.85	.86	1007.41	.92	.51	1.55	1007.34	91	106	102	2.0	251	231	62	82
14:12	1-8	~~14:06~~	.82	.84	1008.98	.90	.50	1.52	1008.89	92	106	102	2.0	252	231	62	82
14:15	1-9	~~14:09~~	.81	.90	1010.50	.90	.50	1.51	1010.41	92	106	102	2.0	251	230	61	81
14:18	1-10	~~14:12~~	.81	.90	1012.06	.90	.50	1.51	1011.92	90	106	102	2.0	250	230	61	81
14:21	1-11	~~14:15~~	.82	.84	1013.66	.90	.50	1.52	1013.43	92	107	102	2.0	250	230	61	80
14:24	1-12	~~14:18~~	.78	.80	1015.17	.88	.49	1.48	1014.95	91	106	102	2.0	250	231	60	79
14:27		~~14:21~~			1016.87				1016.43								
	2-1	14:37	.75	.77	1016.87	.86	.48	1.45		93	105	103	2.0	247	230	62	81
	2-2	14:40	.75	.77	1018.32	.86	.48	1.45	1017.88	93	106	103	2.0	246	230	62	82
	2-3	14:43	.59	.59	1019.71	.76	.42	1.28	1019.33	94	106	103	2.0	247	230	61	82
	2-4	14:46	.64	.65	1021.17	.80	.44	1.34	1020.61	94	106	103	2.0	247	231	61	83
	2-5	14:49	.64	.65	1022.60	.80	.44	1.34	1021.95	93	106	103	2.0	249	230	60	83
	2-6	14:52	.69	.71	1024.07	.83	.46	1.39	1023.29	94	106	103	2.0	249	229	60	83
	2-7	14:55	.79	.81	1025.44	.88	.49	1.49	1024.68	94	107	103	2.0	250	230	61	82
	2-8	14:58	.81	.83	1026.91	.90	.50	1.51	1026.17	94	107	104	2.0	250	230	61	82
	2-9	15:01	.82	.84	1028.47	.90	.50	1.52	1027.68	93	107	103	2.0	251	230	62	81
	2-10	15:04	.88	.90	1029.98	.93	.52	1.57	1029.20	93	107	103	2.0	249	230	62	81
	2-11	15:07	.87	.89	1031.58	.93	.52	1.56	1030.77	92	107	103	2.0	249	230	63	80
	2-12	15:10	.88	.90	1033.11	.93	.52	1.57	1032.33	94	107	103	2.0	250	230	63	80
		15:13			1034.613				1033.908								

Project No. M193411
Metal Shredder Facility

© Mostardi Platt

IMPINGER WEIGHT SHEET

PLANT: Sims Metal

UNIT NO: Crusher

LOCATION: Exhaust

DATE: 9/20/19

TEST NO: 3

METHOD: 5/202

WEIGHED/MEASURED BY: Richy

BALANCE ID: S10-33

Scale ID Number _____

Scale Calibration Check Date: _____

Scale Calibration Check (see QS-6.05C for procedure)

250 grams _____

500 grams _____

750 grams _____

Circle One:	FINAL WEIGHT MLS / GRAMS		INITIAL WEIGHT MLS / GRAMS		IMPINGER GAIN		IMPINGER CONTENTS
IMPINGER 1	414.5		414.5				
IMPINGER 2	582.5		585.0				
IMPINGER 3	728.0		703.6				
IMPINGER 4	862.8		844.6				
IMPINGER 5							
IMPINGER 6							
IMPINGER 7							
IMPINGER 8							

IMPINGERS _____ FINAL TOTAL _____ INITIAL TOTAL _____ TOTAL IMPINGER GAIN

SILICA _____ FINAL TOTAL _____ INITIAL TOTAL _____ TOTAL SILICA GAIN

© Mostardi Platt

Isokinetic Sampling Cover Sheet

Test Engineer: DJH
Test Technician: D PP

Plant Information

Run Number: 1
Test Location: Crusher Exhaust
Duct Shape: Circular or Rectangular
Flue Area: 18.857
Port Type: nipple
Test Method: M 29

Date: 4/20/19
Client Name: Sims Metal Mgmt.
Length: ___ Width: ___ or Diameter: 4.9
Upstream Diameters: 4.4 ~~[illegible]~~
Port Length: 1
Source Condition: ___

Project Number: M193411
Plant Name: Sims Metal Mgmt. Chicago
Downstream Diameters: >2 1.4
Port Diameter: 4.5

Meter and Probe Data

Meter ID: CM25
Pitot ID: 6
Nozzle Kit ID: Tetra # 10
Probe Length: 6
Pre-Test Nozzle Leak Check: 0.00 @ 10 "Hg
Pre-Test Pitot Leak Check: ✓ @ 3.5 "H_2O

Meter Y Value: .984
Pitot Coefficient: .84
Nozzle Diameter: ~~[illegible]~~ .17
Probe Liner: Glass

ΔH Value: 1.722
Train Type: Hot Box
Filter Number/Weight: ___
Thimble Number/Weight: —
Post-Test Nozzle Leak Check: 0.00 @ 19 "Hg
Post-Test Pitot Leak Check: ✓ @ 3.5 "H_2O

Traverse Data

Ports Sampled: 2
Total Points: 16 24

Points/Port: 8 12
Total Test Time: 96

Min/Point: 4
Sample Plane: Horizontal or Vertical

Stack Parameters

Barometric Pressure: 29.71
CO_2 %: ___/___/___/ Avg. 0
Imp and/or silica balance Model and S/N: ___
Initial Imp. Volume or Weight: ___
Initial Silica Weight: ___

Static Pressure: -2
O_2 %: ___/___/___/Avg. 20.9
Final Imp. Volume or Weight: ___
Final Silica Weight: ___

Determined by: Method 3 or Method 3A
Servomex Serial #: ___
Imp. Volume or Weight Gain: ___
Silica Weight Gain: ___

Comments:

© Mostardi Platt

48/44 47.5-1
~~48.57~~ 79.26

Isokinetic Sampling Field Data Sheet

Project Number: M193411 Date: 9/20/19 Test Number: 1

Client: Sims Metal Mgmt Test Location: Crusher Exhaust Operator: DJM Test Tech: DPP

Plant: Sims Metal Mgmt - Chicago Test Method: M29 Page Number: 1 of 1

Port-Point #.	Time	(ΔP)	Orifice Setting (ΔH)	Meter Volume (V_m) ft^3, Actual	Square Root, ΔP	Meter Rate, Cubic Feet/Min.	Theoretical Meter Volume, (V_m) ft^3, per point	Theoretical Meter Volume, (V_m) ft^3, total	Stack Temp, °F	Meter Temp Inlet, °F	Meter Temp Outlet, °F	Pump Vacuum, " Hg	Probe Temp. °F (248 ±25)	Filter Temp. °F	Impinger Outlet Well Temp. °F (max 68)	Amps
1-1	8:38	.95	.82	251.544	.97	.532	2.129	—	77	74	74	5	251	251	52	88.2
-2	9:02	.95	.82	253.68	.97	.532	2.129	255.672	75	75	74	5	251	251	48	88.0
-3	9:06	.90	.76	255.92	.95	.514	2.072	257.807	80	77	74	5	251	251	46	87.48
-4	9:10	.88	.76	257.87	.94	.514	2.049	259.873	77	74	74	5	251	252	47	87.57
-5	9:14	.88	.76	259.95	.94	.514	2.049	261.922	81	80	75	4	252	251	50	88.6
-6	9:18	1.0	.87	262.03	1.0	.546	2.184	264.971	79	82	75	4	252	250	52	87.45
-7	9:22	.92	.80	264.18	.96	.524	2.095	267.155	79	83	76	4	252	250	51	86.78
-8	9:26	.90	.78	266.29	.95	.518	2.072	269.227	80	83	76	4	252	250	52	86.85
-9	9:30	.90	.78	268.39	.95	.518	2.072	271.322	81	84	76	4	252	250	53	86.47
-10	9:34	.75	.65	270.42	.87	.473	1.891	273.394	80	85	77	4	252	251	54	87.05
-11	9:38	.85	.74	272.31	.92	.503	2.014	275.285	80	86	78	4	252	251	55	85.49
-12	9:42	.88	.76	274.31	.94	.512	2.044	277.295	82	86	79	4	252	253	55	81.43
	9:46			276.351				279.343								
2-1	9:50	.95	.84	276.351	.96	.521	2.162	—	88	83	80	4	252	252	54	82.98
-2	9:54	.95	.81	278.55	.97	.532	2.129	276.509	81	85	81	4	252	252	55	82.02
-3	9:58	.92	.79	280.66	.96	.524	2.095	280.635	80	86	80	4	252	252	56	82.06
-4	10:02	.88	.75	282.77	.94	.512	2.044	282.733	78	86	81	4	252	252	55	81.28
-5	10:06	.88	.75	284.81	.94	.512	2.044	284.781	82	87	81	4	252	252	57	80.73
-6	10:10	.92	.79	286.85	.96	.524	2.095	286.830	81	87	81	4	252	251	55	81.55
-7	10:14	.98	.84	288.94	.99	.541	2.162	288.925	82	87	82	4	252	252	55	84.40
-8	10:18	.95	.81	291.092	.97	.532	2.129	291.087	80	87	82	4	252	252	55	85.44
-9	10:22	.88	.75	293.24	.94	.512	2.044	293.216	82	88	83	4	252	252	56	84.85
-10	10:26	.88	.75	295.28	.94	.512	2.044	295.264	80	88	83	4	252	252	54	84.85
-11	10:30	.92	.79	297.36	.96	.524	2.095	297.313	82	88	83	4	252	252	58	83.34
-12	10:34	.95	.81	299.44	.97	.532	2.129	299.408	81	88	83	4	252	252	54	84.25
	10:38			301.552				301.537								

Project No. M193411
Metal Shredder Facility
102 of 145
© Mostardi Platt

IMPINGER WEIGHT SHEET

PLANT: Sims Metals

UNIT NO: Crusher

LOCATION: Exhaust

DATE: 9/20/19

TEST NO: 1

METHOD: 29

WEIGHED/MEASURED BY: CE

BALANCE ID: S10-33

Scale ID Number _____

Scale Calibration Check Date: _____

Scale Calibration Check (see QS-6.05C for procedure)

250 grams _____

500 grams _____

750 grams _____

See MS1202 R1

Circle One:	FINAL WEIGHT MLS / GRAMS		INITIAL WEIGHT MLS / GRAMS		IMPINGER GAIN		IMPINGER CONTENTS
IMPINGER 1	782.0		756.5				
IMPINGER 2	692.1		685.9				
IMPINGER 3	656.8		653.9				
IMPINGER 4	652.2		651.9				
IMPINGER 5	690.7		690.2				
IMPINGER 6	856.8		847.7				
IMPINGER 7							
IMPINGER 8							

IMPINGERS _____ FINAL TOTAL _____ INITIAL TOTAL _____ TOTAL IMPINGER GAIN

SILICA _____ FINAL TOTAL _____ INITIAL TOTAL _____ TOTAL SILICA GAIN

© Mostardi Platt

Isokinetic Sampling Cover Sheet

Test Engineer: DJM
Test Technician: DAP

Plant Information

Run Number: 2
Test Location: Crusher Exhaust
Duct Shape: Circular or Rectangular
Flue Area: 18.857
Port Type: nipple
Test Method: M29

Date: 4/20/15
Client Name: Sims Metal Mgmt.
Length: ___ Width: ___ or Diameter: 4.9
Upstream Diameters: ~~2.82~~ 4.8
Port Length: 1
Source Condition:

Project Number: M193411
Plant Name: Sims Metal Mgmt. Chicago
Downstream Diameters: ~~2.97~~ 1.4
Port Diameter: 4.5

Meter and Probe Data

Meter ID: CM25
Pitot ID: 6
Nozzle Kit ID: Tetra #10
Probe Length: 6
Pre-Test Nozzle Leak Check: Ok @ 10 "Hg
Pre-Test Pitot Leak Check: ✓ @ 35 "H_2O

Meter Y Value: .988
Pitot Coefficient: .84
Nozzle Diameter: ~~.246~~ .17
Probe Liner: Glass

ΔH Value: 1.722
Train Type: Hot Box
Filter Number/Weight:
Thimble Number/Weight: —
Post-Test Nozzle Leak Check: Ok @ 10 "Hg
Post-Test Pitot Leak Check: ✓ @ 35 "H_2O

Traverse Data

Ports Sampled: 2
Total Points: ~~16~~ 24

Points/Port: ~~8~~ 12
Total Test Time: 96

Min/Point: 4
Sample Plane: ~~Horizontal~~ or Vertical

Stack Parameters

Barometric Pressure: 29.49
CO_2 %: ___/___/___/ Avg. 0
Imp and/or silica balance Model and S/N:
Initial Imp. Volume or Weight:
Initial Silica Weight:

Static Pressure: -3
O_2 %: ___/___/___/Avg. 20.9
Servomex Serial #:
Final Imp. Volume or Weight:
Final Silica Weight:

Determined by: Method 3 or Method 3A
Imp. Volume or Weight Gain:
Silica Weight Gain:

Comments:

© Mostardi Platt

Isokinetic Sampling Field Data Sheet

Project Number: M193411 Date: 9/29/19 Test Number: 2

Client: Sims Metal Mgmt Test Location: Crusher Exhaust Operator: DJG Test Tech: DPP

Plant: Sims Metal Mgmt - Chicago Test Method: M29 Page Number: 1 of 1

Port-Point #.	Time	(ΔP)	Orifice Setting (ΔH)	Meter Volume (V_m) ft^3, Actual	Square Root, ΔP	Meter Rate, Cubic Feet/ Min.	Theoretical Meter Volume, (V_m) ft^3, per point	Theoretical Meter Volume, (V_m) ft^3, total	Stack Temp, °F	Meter Temp Inlet, °F	Meter Temp Outlet, °F	Pump Vacuum, " Hg	Probe Temp. °F (248 ±25)	Filter Temp. °F	Impinger Outlet Well Temp. °F (max 68)	Amp
1-1	11:30	.95	.82	301.750	.97	.537	2.148	—	80	84	83	4	252	252	65	93.6
-2	11:34	.95	.82	303.93	.97	.537	2.148	303.928	80	86	84	4	252	250	64	89.22
-3	11:38	.92	.79	306.092	.96	.525	2.114	306.076	83	88	84	4	252	250	63	87.78
-4	11:42	.90	.78	308.22	.95	.523	2.091	308.140	83	88	84	4	252	252	63	85.42
-5	11:46	.90	.78	310.31	.95	.523	2.091	310.281	84	90	85	4	252	252	62	86.52
-6	11:50	.90	.78	312.41	.95	.523	2.091	312.372	85	90	85	4	252	252	62	86.55
-7	11:54	.88	.76	314.48	.94	.517	2.068	314.463	86	91	85	4	252	252	62	86.41
-8	11:58	.88	.76	316.55	.94	.517	2.068	316.531	85	92	86	4	252	252	62	86.12
-9	12:02	.92	.79	318.71	.96	.529	2.114	318.698	84	92	86	4	252	252	62	85.00
-10	12:06	.90	.79	320.75	.95	.523	2.091	320.712	85	92	87	4	253	252	62	82.22
-11	12:10	.88	.76	322.84	.94	.517	2.068	322.803	87	93	87	4	252	252	62	83.37
-12	12:14	.92	.79	324.895	.96	.529	2.114	324.871	84	93	87	4	252	252	62	84.14
	12:18			326.951				326.935								
2-1	12:22	.95	.82	327.051	.97	.537	2.148	—	87	89	87	4	252	252	65	82.00
-2	12:26	.95	.82	329.26	.97	.537	2.148	329.133	87	90	84	4	252	252	65	82.44
-3	12:30	.92	.79	331.31	.96	.529	2.114	331.281	87	92	86	4	252	252	65	81.04
-4	12:34	.92	.79	332.42	.96	.529	2.114	333.395	85	93	84	4	252	252	65	80.33
-5	12:38	.90	.78	335.54	.95	.523	2.091	335.509	85	93	86	4	252	252	64	80.12
-6	12:42	.88	.76	337.62	.94	.517	2.068	337.600	85	93	88	4	252	252	65	80.12
-7	12:46	.85	.73	339.74	.92	.506	2.022	339.669	85	93	84	4	252	252	65	80.15
-8	12:50	.88	.76	341.73	.94	.517	2.068	341.709	86	94	84	4	252	252	65	80.17
-9	12:54	.88	.76	343.77	.94	.517	2.068	343.767	86	94	84	4	252	252	65	80.25
-10	12:58	.88	.76	345.86	.94	.517	2.068	345.835	86	94	84	4	252	252	65	78.14
-11	13:02	.90	.78	347.99	.95	.523	2.091	347.94	86	94	84	4	252	252	65	78.44
-12	13:06	.92	.79	349.99	.96	.529	2.114	349.994	86	94	84	4	252	252	65	78.50
	13:10			352.121				352.107				4				

Project No. M193411
Metal Shredder Facility
105 of 145
© Mostardi Platt

IMPINGER WEIGHT SHEET

PLANT: Sims Metals

UNIT NO: ~~Exhaust~~ Crusher

LOCATION: Exhaust

DATE: 9/20/19

TEST NO: 2

METHOD: 29

WEIGHED/MEASURED BY: [illegible]

BALANCE ID: 510-33

Scale ID Number _____

Scale Calibration Check Date: _____

Scale Calibration Check (see QS-6.05C for procedure)

250 grams _____

500 grams _____

750 grams _____

Circle One:	FINAL WEIGHT MLS / GRAMS		INITIAL WEIGHT MLS / GRAMS		IMPINGER GAIN		IMPINGER CONTENTS
IMPINGER 1	647.0		620.7				
IMPINGER 2	737.3		730.4				
IMPINGER 3	647.5		645.8				
IMPINGER 4	738.6		~~723.4~~ 736.6				
IMPINGER 5	754.8		756.2				
IMPINGER 6	783.5		773.4				
IMPINGER 7							
IMPINGER 8							

IMPINGERS _____ FINAL TOTAL _____ INITIAL TOTAL _____ TOTAL IMPINGER GAIN

SILICA _____ FINAL TOTAL _____ INITIAL TOTAL _____ TOTAL SILICA GAIN

© Mostardi Platt

Isokinetic Sampling Cover Sheet

Test Engineer: DJY
Test Technician: _____

Plant Information

Run Number: 3
Test Location: Crusher Exhaust
Duct Shape: Circular or Rectangular
Flue Area: 18.857
Port Type: nipple
Test Method: M 29

Date: 4/ /15
Client Name: Sims Metal Mgmt.
Length: _____ Width: _____ or Diameter: 4.5
Upstream Diameters: ~~2.5~~ 4.5
Port Length: 1
Source Condition: _____

Project Number: M193411
Plant Name: Sims Metal Mgmt. Chicago
Downstream Diameters: ~~2.5~~ 1.4
Port Diameter: 4.5

Meter and Probe Data

Meter ID: CM25
Pitot ID: 6
Nozzle Kit ID: Tetra #10
Probe Length: 6
Pre-Test Nozzle Leak Check: 0.49 @ 10 "Hg
Pre-Test Pitot Leak Check: ✓ @ 3.7 "H_2O

Meter Y Value: .984
Pitot Coefficient: .84
Nozzle Diameter: ~~.2510~~ .17
Probe Liner: Glass

ΔH Value: 1.722
Train Type: Hot Box
Filter Number/Weight: _____
Thimble Number/Weight: —
Post-Test Nozzle Leak Check: 0.0 @ 12 "Hg
Post-Test Pitot Leak Check: ✓ @ 3.4 "H_2O

Traverse Data

Ports Sampled: 2
Total Points: ~~16~~ 24

Points/Port: ~~8~~ 12
Total Test Time: 96

Min/Point: 4
Sample Plane: ~~Horizontal~~ or Vertical

Stack Parameters

Barometric Pressure: 29.44
CO_2 %: ____/____/____/ Avg. 0
Imp and/or silica balance Model and S/N: _____
Initial Imp. Volume or Weight: _____
Initial Silica Weight: _____

Static Pressure: -.2
O_2 %: ____/____/____/Avg. 20.9
Final Imp. Volume or Weight: _____
Final Silica Weight: _____

Determined by: Method 3 or Method 3A
Servomex Serial #: _____
Imp. Volume or Weight Gain: _____
Silica Weight Gain: _____

Comments:

© Mostardi Platt

Isokinetic Sampling Field Data Sheet

Project Number: M193411 Date: 9/20/19 Test Number: 3

Client: Sims Metal Mgmt Test Location: Crusher Exhaust Operator: DSH Test Tech: DAP

Plant: Sims Metal Mgmt - Chicago Test Method: M29 Page Number: 1 of 1

0.864 ~~0.881~~ 0.881 ~~0.864~~

Port-Point #.	Time	(ΔP)	Orifice Setting (ΔH)	Meter Volume (V_m) ft^3, Actual	Square Root, ΔP	Meter Rate, Cubic Feet/ Min.	Theoretical Meter Volume, (V_m) ft^3, per point	Theoretical Meter Volume, (V_m) ft^3, total	Stack Temp, °F	Meter Temp Inlet, °F	Meter Temp Outlet, °F	Pump Vacuum, " Hg	Probe Temp. °F (248 ±25)	Filter Temp. °F	Impinger Outlet Well Temp. °F (max 68)	Amp
1-1	1345	0.91	0.79	53.246	0.901	0.497	1.987	—	81	93	92	4	252	252	65	91.92
-2	1349	.95	.82	55.28	.97	.537	2.148	55.233	82	95	93	4	252	252	65	90.55
-3	1353	.92	.79	57.52	.96	.529	2.114	57.457	83	96	93	4	252	252	63	89.43
-4	1357	.92	.79	59.76	.96	.529	2.114	59.681	82	97	93	4	252	252	63	89.22
-5	1401	.90	.78	61.74	.95	.523	2.091	61.725	82	97	93	4	252	252	63	89.27
-6	1405	.88	.76	63.85	.94	.517	2.069	63.816	82	97	93	4	252	252	63	88.74
-7	1409	.85	.73	65.92	.92	.508	2.032	65.883	82	97	93	4	252	252	62	88.55
-8	1413	.88	.76	67.93	.94	.517	2.068	67.915	82	97	93	4	252	253	60	88.12
-9	1417	.87	.77	69.99	.94	.520	2.079	69.983	83	98	94	4	252	252	58	87.48
-10	1421	.90	.78	72.08	.95	.523	2.091	72.062	84	99	94	4	252	252	58	87.52
-11	1425	.90	.78	74.17	.95	.523	2.091	74.153	84	98	94	4	252	252	59	88.38
-12	1429	.92	.79	76.27	.96	.529	2.117	76.244	84	98	94	4	252	252	59	88.25
	1433			78.372				78.358								
2-1	14:37	.90	.78	78.372	.95	.532	2.129	—	84	94	94	4	252	252	65	88.37
-2	14:41	.92	.89	80.52	.96	.538	2.129	80.487	84	95	94	4	252	252	62	88.97
-3	14:45	.92	.89	82.66	.96	.531	2.152	82.639	84	97	94	4	252	252	60	89.20
-4	14:49	.90	.78	84.81	.95	.532	2.129	84.742	85	98	94	4	252	252	58	88.18
-5	14:53	.90	.78	86.93	.95	.532	2.129	86.920	84	95	94	4	252	252	58	86.52
-6	14:57	.88	.77	89.04	.94	.526	2.105	89.049	84	97	94	4	252	252	58	84.49
-7	15:01	.90	.79	91.17	.95	.532	2.129	91.154	84	97	94	4	252	252	59	83.66
-8	15:05	.90	.79	93.31	.95	.532	2.129	93.283	84	97	94	4	252	252	59	82.89
-9	15:09	.88	.77	95.44	.94	.526	2.105	95.412	85	96	94	4	252	252	59	82.75
-10	15:13	.90	.79	97.55	.95	.532	2.129	97.517	85	96	94	4	252	252	59	84.3
-11	15:17	.90	.79	99.72	.95	.532	2.129	99.646	85	96	94	4	252	252	59	86.25
-12	15:21	.90	.79	101.74	.95	.532	2.129	101.775	85	96	94	4	252	252	59	83.17
	15:25			103.922				103.904								

Project No. M193411
Metal Shredder Facility
108 of 145
© Mostardi Platt

IMPINGER WEIGHT SHEET

PLANT: Sims Metal

UNIT NO: Crusher

LOCATION: Exhaust

DATE: 9/20/19

TEST NO: 3

METHOD: 29

WEIGHED/MEASURED BY: Riches

BALANCE ID: S10-33

Scale ID Number _____

Scale Calibration Check Date: _____

Scale Calibration Check (see QS-6.05C for procedure)

250 grams _____

500 grams _____

750 grams _____

Circle One:	FINAL WEIGHT MLS / GRAMS		INITIAL WEIGHT MLS / GRAMS		IMPINGER GAIN		IMPINGER CONTENTS
IMPINGER 1	833.2		802.0				
IMPINGER 2	724.1		719.5				
IMPINGER 3	662.8		661.2				
IMPINGER 4	677.7		698.7				
IMPINGER 5	684.8		685.3				
IMPINGER 6	866.4		856.8				
IMPINGER 7							
IMPINGER 8							

IMPINGERS _____ FINAL TOTAL _____ INITIAL TOTAL _____ TOTAL IMPINGER GAIN

SILICA _____ FINAL TOTAL _____ INITIAL TOTAL _____ TOTAL SILICA GAIN

© Mostardi Platt

Volumetric Flow Rate Determination Field Data Sheet

Project Number: M193411
Client: Sims Metal Management
Test Location: Crusher Exhaust
Source Condition: 50 Hz
Test Engineer: JJC

Date: 9-20-19
Test Number: 1
Start Time: 8:36
End Time: 8:41
Test Tech: DRR

Duct Diameter 4.167 ft
Flue Area 13.64 ft^2
Upstream Disturbance, Diameters 1.4
Downstream Disturbance, Diameters 4.5
Port Length 1 " Port Size 4.5 " Port Type hole Pitot ID 320 Pitot Coefficient (C_p) 0.840
P_{bar} 29.49 "Hg
Static -3.0 "H_2O
Static ____ "Hg
P_s 29.27 "Hg
CO_2 % 0
O_2 % 20
N_2 % 80
Meter No. CM31
Wet Bulb Temp NA
Dry Bulb Temp NA
B_{ws} 0.02
Fluke # CM31
Leak Checks Passed@
Pre 5 Inches H_2O
Post 5 Inches H_2O
Umbilical ID ___

Port-Point #	ΔP	Temp. °F	$\sqrt{\Delta P}$	Null Point Angle, Degrees	Port-Point #	ΔP	Temp. °F	$\sqrt{\Delta P}$	Null Point Angle, Degrees
A - 1	1.1	82			B - 1	1.0	82		
2	1.4	82			2	1.3	82		
3	1.4	82			3	1.5	82		
4	1.2	82			4	1.3	82		
5	1.3	82			5	1.3	82		
6	1.0	82			6	1.2	82		
7	0.94	82			7	1.0	82		
8	0.82	82			8	0.80	82		
Average									

44 x CO_2% + .32 x O_2% + .28 x N_2% = _____ (Md)

(_____ Md × _____1-Bws) + (18 ×_____Bws) = _____ (Ms)

$$85.49 \times ____ Cp \times \sqrt{\frac{(_____)Ts\ °R}{____ Ms \times ____ Ps}} \times ____ \sqrt{\Delta P} = ____ ft/sec\ (Vs)$$

_____ Vs × _____ Flue Area × 60 = _____acfm

$$17.647 \times ____ acfm \times \frac{Ps}{Ts\ °R} = _____ scfm \times 60 = _____ scfh$$

© Mostardi Platt

Volumetric Flow Rate Determination Field Data Sheet

Project Number:	M193411	Date:	9/20/19
Client:	Sims Metal Management	Test Number:	2
Test Location:	Crusher Exhaust	Start Time:	11:06
Source Condition:	T	End Time:	11:11
Test Engineer:	JJC	Test Tech:	~~KHDF~~ DPPI

Duct Diameter 4.67 ft — Upstream Disturbance, Diameters 7.5
13.64 Flue Area ~~19.637~~ ft² — Downstream Disturbance, Diameters 2.5
Port Length 1 " — Port Size 4.5 " — Port Type nipple — Pitot ID 320 — Pitot Coefficient (C_p) .84

P_{bar} 29.49 "Hg — CO_2 % 0 — Wet Bulb Temp NA — Leak Checks Passed@
Static -3.0 "H_2O — O_2 % 20 — Dry Bulb Temp NA — Pre 5 Inches H_2O
Static ____ "Hg — N_2 % 80 — B_{ws} 0.02 — Post 5 Inches H_2O
P_s 29.27 "Hg — Meter No CM31 — Fluke # CM31 — Umbilical ID ___

Port-Point #	ΔP	Temp. °F	$\sqrt{\Delta P}$	Null Point Angle, Degrees	Port-Point #	ΔP	Temp. °F	$\sqrt{\Delta P}$	Null Point Angle, Degrees
1	.9	86			1	.88	87		
2	1.1	86			2	.82	87		
3	1.3	86			3	1.1	87		
4	1.4	86			4	.92	87		
5	1.2	86			5	1.3	87		
6	1.2	86			6	1.2	87		
7	1.1	86			7	.97	87		
8	.69	86			8	.88	87		
Average									

A

B

44 x CO_2% + .32 x O_2% + .28 x N_2% = _____ (Md)

(_____ Md × _____1-Bws) + (18 ×_____Bws) = _____ (Ms)

$$85.49 \times ____ Cp \times \sqrt{\frac{(_____)Ts\ °R}{____ Ms \times ____ Ps}} \times ____ \sqrt{\Delta P} = ____ ft/sec\ (Vs)$$

_____ Vs × _____ Flue Area × 60 = _____acfm

$$17.647 \times ____ acfm \times \frac{Ps}{Ts\ °R} = _____ scfm \times 60 = _____ scfh$$

© Mostardi Platt

Volumetric Flow Rate Determination Field Data Sheet

Project Number:	M193411	Date:	9/20/19
Client:	Sims Metal Management	Test Number:	3
Test Location:	Crusher Exhaust	Start Time:	13:35
Source Condition:	50 Hz	End Time:	13:39
Test Engineer:	JJC	Test Tech:	DPPI

Duct Diameter 4.9 ft — Upstream Disturbance, Diameters ~~7.5~~ 1.4
Flue Area 18.857 ft² — Downstream Disturbance, Diameters ~~22~~ ~4.5
Port Length 1 " Port Size 4.5 " Port Type nipple Pitot ID _____ Pitot Coefficient (C_p) .84

P_{bar} 29.49 "Hg — CO_2 % 0 — Wet Bulb Temp NA — Leak Checks Passed@
Static -3.0 "H_2O — O_2 % 20 — Dry Bulb Temp NA — Pre 5 Inches H_2O
Static _____ "Hg — N_2 % 80 — B_{ws} 0.02 — Post 5 Inches H_2O
P_s 29.27 "Hg — Meter No. CM31 — Fluke # CM31 — Umbilical ID ___

Port-Point #	ΔP	Temp. °F	$\sqrt{\Delta P}$	Null Point Angle, Degrees	Port-Point #	ΔP	Temp. °F	$\sqrt{\Delta P}$	Null Point Angle, Degrees
1	1.0	96			1	.86	96		
2	1.1	96			2	1.0	96		
3	1.2	96			3	1.0	96		
4	1.3	96			4	1.1	96		
5	1.5	96			5	1.2	96		
6	1.1	96			6	1.2	96		
7	.81	96			7	1.0	96		
8	.46	96			8	.79	95		
Average									

A

B

$44 \times CO_2\% + .32 \times O_2\% + .28 \times N_2\% =$ _____ (Md)

(_____ Md × _____ 1-Bws) + (18 × _____ Bws) = _____ (Ms)

$$85.49 \times ____ Cp \times \sqrt{\frac{(_____)Ts\ °R}{____ Ms \times ____ Ps}} \times ____ \sqrt{\Delta P} = ____ ft/sec\ (Vs)$$

_____ Vs × _____ Flue Area × 60 = _____ acfm

$$17.647 \times ____ acfm \times \frac{Ps}{Ts\ °R} = _____ scfm \times 60 = _____ scfh$$

© Mostardi Platt

Volumetric Flow Rate Determination Field Data Sheet

Project Number:	M193411	Date:	9/20/19
Client:	Sims Metal Management	Test Number:	4
Test Location:	Crusher Exhaust	Start Time:	15:20
Source Condition:		End Time:	15:26
Test Engineer:	JJC	Test Tech:	~~[illegible]~~ DPPI

Duct Diameter 4.9 ft — Upstream Disturbance, Diameters >.5
Flue Area 18.857 ft² — Downstream Disturbance, Diameters >2
Port Length 1 " Port Size 4.5 " Port Type nipple Pitot ID ____ Pitot Coefficient (C_p) .84

P_{bar} 29.49 "Hg	CO_2 % 0	Wet Bulb Temp NA	Leak Checks Passed@
Static -3.0 "H_2O	O_2 % 20	Dry Bulb Temp NA	Pre 5 Inches H_2O
Static ____ "Hg	N_2 % 80	B_{ws} 0.02	Post 5 Inches H_2O
P_s 29.27 "Hg	Meter No. CM31	Fluke # CM31	Umbilical ID ___

Port-Point #	ΔP	Temp. °F	$\sqrt{\Delta P}$	Null Point Angle, Degrees	Port-Point #	ΔP	Temp. °F	$\sqrt{\Delta P}$	Null Point Angle, Degrees
A 1	.51	94			B 1	.48	93		
2	.63	93			2	.51	93		
3	.67	93			3	.60	93		
4	.69	93			4	.63	93		
5	.71	93			5	.69	92		
6	.71	93			6	.69	92		
7	.60	92			7	.65	92		
8	.64	92			8	.75	93		
Average									

$44 \times CO_2\% + .32 \times O_2\% + .28 \times N_2\% =$ _____ (Md)

(_____ Md × _____ 1-Bws) + (18 × _____ Bws) = _____ (Ms)

$$85.49 \times ____ Cp \times \sqrt{\frac{(____)Ts\ °R}{____ Ms \times ____ Ps}} \times ____ \sqrt{\Delta P} = ____ ft/sec\ (Vs)$$

_____ Vs × _____ Flue Area × 60 = _____ acfm

$$17.647 \times ____ acfm \times \frac{Ps}{Ts\ °R} = ____ scfm \times 60 = ____ scfh$$

© Mostardi Platt

Appendix H- Calibration Data

© Mostardi Platt

Client:	Metal Management Midwest, Inc.	**Test Location:**	Shredder Emissions
Facility:	Paulina Street Facility	**Date:**	9/20/19
Project #:	M193411	**Operator:**	R. Sollars
Operating Condition:	Normal		

Probe Length:	6.0	**ft**
Probe Type:	Extractive	
Sample Plane:	Horizontal	
Port Length:	8.00	**in.**
Port Size (diameter):	4.5	**in.**
Port Type:	Nipple	
Duct Shape:	Circular	
Diameter:	4.167	**ft**
Duct Area:	13.64	**Sq. Ft.**
Upstream Diameters:	>0.5	
Downstream Diameters:	>2.0	
Number of Ports Sampled:	1	
Number of Points per Port:	1	
Total Number of Traverse Points:	1	

Type	Setting	Cylinder ID	Cylinder Value	Predicted Value	Predicted Value Difference, %	Analyzer Response	Difference, % of Cylinder	Expiration Date	Final Bottle Pressure, PSI
THC ppmv	Zero	Zero Air	0	N/A	N/A	-0.50	0.55%	N/A	1100
	Low	EB0065467	30.03	29.49	-0.04%	29.50	1.76%	7/5/2024	900
	Mid	EB0039469	60.46	59.87	-0.37%	60.10	0.60%	2/22/2027	1800
	High	CC401436	91.43	N/A	N/A	90.80	0.69%	5/31/2027	1900

Response Time Data

Type	RM Analyzer Make/Model	RM Analyzer s/n	Analyzer Span	RM Gas Span
THC ppmv	TECO 51i	11618970155	1000	111
CH4 ppmv	MKS Multigas FTIR	18190669	1000	111
	Start		95% Response	Time (min)
Upscale				0.5
Downscale				0.5

© Mostardi Platt

Client: Metal Management Midwest, Inc.
Facility: Paulina Street Facility
Fuel Type: Other

Location: Shredder Emissions
Date: 9/20/19
Operator: R. Sollars
Project #: M193411

THC ppmv Calibration Data

Run #	Cma	Precal	Postcal	Pre zero	Post zero	Co	Cm	C	Cgas	Span Bias	Span Drift	Zero Bias	Zero Drift
1	60.46	60.10	60.60	-0.50	0.60	0.05	60.35	48.90	48.9	-0.23	0.45	-0.54	0.99
2	60.46	60.60	61.40	0.60	1.50	1.05	61.00	70.10	70.1	-1.55	0.72	-1.35	0.81
3	60.46	61.40	61.70	1.50	1.80	1.65	61.55	60.00	60.0	-2.05	0.27	-1.62	0.27

Calibration Corrected Data

Run #	Run Date	Start Time	End Time	THC ppmv	CH4 ppmv	C2H6 ppmv
1	9/20/19	09:00	09:59	48.9	2.6	1.1
2	9/20/19	11:40	12:39	70.1	2.3	1.9
3	9/20/19	13:45	14:44	60.0	2.3	1.8

© Mostardi Platt

Client: Metal Management Midwest, Inc.
Facility: Paulina Street Facility
Project #: M193411
Test Location: Shredder Emissions
Operating Condition: Normal
Date: 9/20/19

Linearity Cal/Pre 1 Cal

Time	THC ppmv	
05:23	29.50	l
05:24	27.40	
05:25	90.80	h
05:26	104.00	
05:27	103.70	
05:28	93.20	
05:29	93.20	
05:30	74.60	
05:31	1.00	
05:32	-0.50	
05:33	-0.50	z
05:34	-0.90	
05:35	-0.90	
05:36	120.60	
05:37	88.90	
05:38	61.30	
05:39	60.80	
08:00	1.30	
08:01	1.20	
08:02	1.10	
08:03	1.30	
08:04	21.90	
08:05	60.10	
08:06	60.10	m
08:07	26.00	
08:08	0.50	
08:09	-0.10	z

© Mostardi Platt

Client: Metal Management Midwest, Inc.
Facility: Paulina Street Facility
Project #: M193411

Test Location: Shredder Emissions
Operating Condition: Normal
Date: 9/20/19

Post 1/Pre 2

Time	THC ppmv	
10:22	0.60	
10:23	0.60	z
10:24	1.60	
10:25	57.20	
10:26	60.60	
10:27	60.60	m

Post 2/Pre 3

Time	THC ppmv	
12:54	1.60	
12:55	1.50	z
12:56	35.00	
12:57	61.50	
12:58	61.40	m

Post 3

Time	THC ppmv	
14:53	16.50	
14:54	2.30	
14:55	2.10	
14:56	1.80	z
14:57	5.50	
14:58	56.60	
14:59	61.70	
15:00	61.70	m

© Mostardi Platt

Client:	Metal Management Midwest, Inc.	**Test Location:**	Shredder Emissions
Facility:	Paulina Street Facility	**Date:**	9/20/19
Project #:	M193411	**Operator:**	R. Sollars
Operating Condition:	Normal	**FTIR s/n:**	017613963

Fuel Type	Other	
Probe Length:	6.0	**ft**
Sample Plane:	Horizontal	
Port Length:	8.00	**in.**
Port Size (diameter):	4.5	**in.**
Port Type:	Nipple	
Duct Shape:	Circular	
Diameter:	4.167	**ft**
Duct Area:	13.64	**Sq. Ft.**
Upstream Diameters:	>0.5	
Downstream Diameters:	>2.0	

Type	Compound	Cylinder ID	Cylinder Value	Expiration Date	Final Bottle Pressure, PSI
Zero Gas	**Nitrogen**	Zero Nitrogen	0	N/A	1200
Certified Transfer Standard	**Ethylene**	EB002598	100	6/5/2022	1200
Analyte Spike Gas	**Acetaldehyde**	CC718237	201.1	6/10/2020	1800
	Methanol		212.1		
	SF6		5.099		

Compounds Reported	Units for report
H2O%	%v
CO2%	%v
CH4	ppmv wet
Ethane	ppmv wet

© Mostardi Platt

Client: Metal Management Midwest, Inc.
Facility: Paulina Street Facility
Project #: M193411
Operating Condition: Normal

Test Location: Shredder Emissions
Date: 9/20/2019
Operator: R. Sollars
FTIR s/n: 017613963

Nitrogen (Zero) Direct to FTIR

Spectrum	Date	Time	H2O% %v	CO2% %v	Ethylene ppmv wet	Acetaldehyde ppmv wet	Methanol ppmv wet	SF6 ppmv wet
N2_DIR_0006.LAB	9/20/19	6:10:27	0.0	0.0	0.0	-0.3	0.0	-0.005
N2_DIR_0007.LAB	9/20/19	6:10:34	0.0	0.0	0.1	0.1	0.0	-0.001
N2_DIR_0008.LAB	9/20/19	6:10:42	0.0	0.0	-0.1	0.6	-0.1	0.007
N2_DIR_0009.LAB	9/20/19	6:10:49	0.0	0.0	0.0	-0.4	0.3	0.003
N2_DIR_0010.LAB	9/20/19	6:10:57	0.0	0.0	0.1	-0.1	0.3	-0.003
N2_DIR_0011.LAB	9/20/19	6:11:04	0.0	0.0	-0.1	0.3	0.0	0.000
N2_DIR_0012.LAB	9/20/19	6:11:12	0.0	0.0	0.1	0.2	0.1	-0.005
N2_DIR_0013.LAB	9/20/19	6:11:19	0.0	0.0	-0.2	0.4	-0.1	0.004
N2_DIR_0014.LAB	9/20/19	6:11:27	0.0	0.0	0.0	-0.1	0.2	-0.009
N2_DIR_0015.LAB	9/20/19	6:11:34	0.0	0.0	-0.1	-0.1	-0.1	-0.001

CTS, Direct to FTIR

Spectrum	Date	Time	H2O% %v	CO2% %v	Ethylene ppmv wet	Acetaldehyde ppmv wet	Methanol ppmv wet	SF6 ppmv wet	Recovery % Ethylene
CTS_DIR_0048.LAB	9/20/19	6:20:13	0.0	0.0	0.2	223.4	224.8	5.221	**0.2%**
CTS_DIR_0049.LAB	9/20/19	6:20:21	0.0	0.0	-0.3	217.8	218.0	4.967	**-0.3%**
CTS_DIR_0050.LAB	9/20/19	6:20:28	0.0	0.0	-0.4	217.0	217.7	4.983	**-0.4%**
CTS_DIR_0051.LAB	9/20/19	6:20:36	0.0	0.0	-0.2	216.6	217.0	4.963	**-0.2%**
CTS_DIR_0052.LAB	9/20/19	6:20:43	0.0	0.0	-0.6	216.8	216.3	4.967	**-0.6%**
CTS_DIR_0053.LAB	9/20/19	6:20:51	0.0	0.0	-0.2	216.5	216.5	4.958	**-0.2%**
CTS_DIR_0054.LAB	9/20/19	6:20:58	0.0	0.0	-0.3	216.0	216.7	4.968	**-0.3%**
CTS_DIR_0055.LAB	9/20/19	6:21:06	0.0	0.0	-0.2	216.1	216.0	4.958	**-0.2%**
	Average				**-0.2**				

Analyte Direct to FTIR

Spectrum	Date	Time	H2O% %v	CO2% %v	Ethylene ppmv wet	Acetaldehyde ppmv wet	Methanol ppmv wet	SF6 ppmv wet	Recovery % Acetaldehyde
ACE_DIR_0057.LAB	9/20/19	6:21:46	0.0	0.0	-0.4	215.0	215.7	4.969	**106.9%**
ACE_DIR_0058.LAB	9/20/19	6:21:53	0.0	0.0	-0.3	216.0	214.8	4.972	**107.4%**
ACE_DIR_0059.LAB	9/20/19	6:22:01	0.0	0.0	-0.4	215.8	215.0	4.973	**107.3%**
ACE_DIR_0060.LAB	9/20/19	6:22:08	0.0	0.0	-0.5	216.9	215.0	4.974	**107.8%**
ACE_DIR_0061.LAB	9/20/19	6:22:16	0.0	0.0	-0.3	216.3	214.5	4.972	**107.5%**
ACE_DIR_0062.LAB	9/20/19	6:22:23	0.0	0.0	-0.3	215.9	214.3	4.959	**107.3%**
ACE_DIR_0063.LAB	9/20/19	6:22:31	0.0	0.0	-0.5	216.1	214.1	4.947	**107.5%**
ACE_DIR_0064.LAB	9/20/19	6:22:39	0.0	0.0	-0.3	215.5	214.3	4.951	**107.2%**
	Average					**215.9**	**214.7**	**4.965**	

CTS, System Purge and Reposne Time Test

Spectrum	Date	Time	H2O% %v	CO2% %v	Ethylene ppmv wet	Acetaldehyde ppmv wet	Methanol ppmv wet	SF6 ppmv wet	Recovery % Ethylene	Response Time
CTS_RT_0098.LAB	9/20/19	6:39:39	2.1	0.1	0.0	0.1	0.2	0.004	**0.0%**	-
CTS_RT_0099.LAB	9/20/19	6:39:47	1.3	0.0	35.6	0.4	3.5	0.008	**35.6%**	**8**
CTS_RT_0100.LAB	9/20/19	6:39:55	0.2	0.0	89.8	0.2	0.4	0.000	**89.8%**	**16**
CTS_RT_0101.LAB	9/20/19	6:40:02	0.0	0.0	99.4	0.4	0.1	-0.001	**99.4%**	**23**

Zero Gas System Purge and Response Time Test

Spectrum	Date	Time	H2O% %v	CO2% %v	Ethylene ppmv wet	Acetaldehyde ppmv wet	Methanol ppmv wet	SF6 ppmv wet	Recovery % Ethylene	Response Time
N2_SYS_0065.LAB	9/20/19	6:29:48	2.1	0.1	0.0	2.6	3.4	0.063	**0.0%**	-
N2_SYS_0066.LAB	9/20/19	6:30:03	2.1	0.1	0.1	0.4	0.8	0.003	**0.1%**	**8**
N2_SYS_0067.LAB	9/20/19	6:30:18	2.1	0.1	0.0	0.2	0.6	0.014	**0.0%**	**23**
N2_SYS_0068.LAB	9/20/19	6:30:33	2.1	0.1	0.1	0.3	0.4	0.004	**0.1%**	**38**

© Mostardi Platt

Native Effluent Prior to Analyte Spike

Spectrum	Date	Time	H2O% %v	CO2% %v	Ethylene ppmv wet	Acetaldehyde ppmv wet	Methanol ppmv wet	SF6 ppmv wet
POST1_PRESPIKE_0336.LAB	9/20/19	10:33:27	3.4	0.1	4.1	0.2	1.3	-0.016
POST1_PRESPIKE_0337.LAB	9/20/19	10:33:34	3.8	0.1	2.5	-0.7	1.2	-0.024
POST1_PRESPIKE_0338.LAB	9/20/19	10:33:42	3.9	0.1	0.3	0.2	2.3	-0.019
						-0.1	**1.6**	**-0.020**

Effluent Spike Using Analyte Post Run 1

Spectrum	Date	Time	H2O% %v	CO2% %v	Ethylene ppmv wet	Acetaldehyde ppmv wet	Methanol ppmv wet	SF6 ppmv wet	Dilution Factor	Recovery % Acetaldehyde
POST1_SPIKE_0360.LAB	9/20/19	10:36:51	3.7	0.1	0.6	20.4	20.7	0.397	**8.0%**	**118.6%**
POST1_SPIKE_0361.LAB	9/20/19	10:36:58	3.7	0.1	0.7	19.8	20.4	0.427	**8.6%**	**106.9%**
POST1_SPIKE_0362.LAB	9/20/19	10:37:06	3.7	0.1	0.5	20.3	20.8	0.430	**8.7%**	**109.1%**
POST1_SPIKE_0363.LAB	9/20/19	10:37:14	3.7	0.1	0.3	18.3	17.9	0.409	**8.2%**	**103.3%**
POST1_SPIKE_0364.LAB	9/20/19	10:37:21	3.9	0.1	0.2	16.8	17.4	0.376	**7.6%**	**103.3%**
POST1_SPIKE_0365.LAB	9/20/19	10:37:29	4.0	0.1	0.1	17.0	17.0	0.382	**7.7%**	**103.2%**
POST1_SPIKE_0366.LAB	9/20/19	10:37:36	3.9	0.1	-0.1	15.2	16.7	0.391	**7.9%**	**90.2%**
POST1_SPIKE_0367.LAB	9/20/19	10:37:43	3.8	0.1	0.5	15.9	16.7	0.361	**7.3%**	**102.1%**
							Average:		**8.0%**	**104.6%**

CTS, System Purge Post Run 1

Spectrum	Date	Time	H2O% %v	CO2% %v	Ethylene ppmv wet	Acetaldehyde ppmv wet	Methanol ppmv wet	SF6 ppmv wet	Recovery % Ethylene
POST1_CTS_0326.LAB	9/20/19	10:31:47	0.0	0.0	100.2	-0.9	0.6	-0.019	**100.2%**
POST1_CTS_0327.LAB	9/20/19	10:31:54	0.0	0.0	100.8	-0.9	-0.1	-0.022	**100.8%**
POST1_CTS_0328.LAB	9/20/19	10:32:02	0.0	0.0	99.6	0.2	-0.4	-0.023	**99.6%**
POST1_CTS_0329.LAB	9/20/19	10:32:09	0.0	0.0	100.7	-0.2	0.1	-0.008	**100.7%**
POST1_CTS_0330.LAB	9/20/19	10:32:17	0.0	0.0	100.1	-0.3	-0.2	-0.007	**100.1%**
POST1_CTS_0331.LAB	9/20/19	10:32:24	0.0	0.0	101.3	-0.4	0.1	0.002	**101.3%**
POST1_CTS_0332.LAB	9/20/19	10:32:32	0.0	0.0	99.3	-0.3	-0.2	0.000	**99.3%**
POST1_CTS_0333.LAB	9/20/19	10:32:39	0.0	0.0	99.7	-0.4	0.7	-0.010	**99.7%**

Native Effluent Prior to Analyte Spike

Spectrum	Date	Time	H2O% %v	CO2% %v	Ethylene ppmv wet	Acetaldehyde ppmv wet	Methanol ppmv wet	SF6 ppmv wet
RUN2_0490.LAB	9/20/19	12:40:33	4.5	0.1	0.2	0.2	0.6	-0.015
RUN2_0491.LAB	9/20/19	12:41:33	4.4	0.1	0.1	0.2	0.6	-0.015
RUN2_0492.LAB	9/20/19	12:42:33	4.2	0.1	0.2	-0.3	0.4	-0.013
						0.1	**0.5**	**-0.014**

Effluent Spike Using Analyte Post Run 2

Spectrum	Date	Time	H2O% %v	CO2% %v	Ethylene ppmv wet	Acetaldehyde ppmv wet	Methanol ppmv wet	SF6 ppmv wet	Dilution Factor	Recovery % Acetaldehyde
POST2_SPIKE_0510.LAB	9/20/19	12:50:08	3.9	0.1	0.0	13.3	11.8	0.275	**5.5%**	**110.9%**
POST2_SPIKE_0511.LAB	9/20/19	12:50:16	3.9	0.1	0.3	13.6	12.5	0.277	**5.6%**	**112.5%**
POST2_SPIKE_0512.LAB	9/20/19	12:50:23	4.1	0.1	0.7	12.3	12.3	0.263	**5.3%**	**107.2%**
POST2_SPIKE_0513.LAB	9/20/19	12:50:31	3.7	0.1	0.8	13.7	12.5	0.294	**5.9%**	**106.5%**
POST2_SPIKE_0514.LAB	9/20/19	12:50:38	3.6	0.1	0.0	14.4	12.9	0.294	**5.9%**	**111.7%**
POST2_SPIKE_0515.LAB	9/20/19	12:50:46	3.9	0.1	0.4	14.1	13.2	0.293	**5.9%**	**110.3%**
POST2_SPIKE_0516.LAB	9/20/19	12:50:53	3.9	0.1	0.5	16.3	15.6	0.363	**7.3%**	**103.1%**
POST2_SPIKE_0517.LAB	9/20/19	12:51:01	3.8	0.1	0.6	17.9	17.1	0.371	**7.5%**	**110.2%**
							Average:		**6.1%**	**109.0%**

CTS, System Purge Post Run 2

Spectrum	Date	Time	H2O% %v	CO2% %v	Ethylene ppmv wet	Acetaldehyde ppmv wet	Methanol ppmv wet	SF6 ppmv wet	Recovery % Ethylene
POST2_CTS_0520.LAB	9/20/19	12:52:30	0.0	0.0	100.2	-0.4	-0.3	-0.017	**100.2%**
POST2_CTS_0521.LAB	9/20/19	12:52:37	0.0	0.0	99.6	-0.3	0.6	0.002	**99.6%**
POST2_CTS_0522.LAB	9/20/19	12:52:45	0.0	0.0	99.6	0.4	0.4	-0.028	**99.6%**
POST2_CTS_0523.LAB	9/20/19	12:52:52	0.0	0.0	99.0	0.4	0.4	-0.013	**99.0%**
POST2_CTS_0524.LAB	9/20/19	12:53:00	0.0	0.0	100.1	1.0	-0.2	-0.022	**100.1%**
POST2_CTS_0525.LAB	9/20/19	12:53:08	0.0	0.0	100.1	0.2	-0.2	-0.004	**100.1%**
POST2_CTS_0526.LAB	9/20/19	12:53:15	0.0	0.0	99.6	0.3	-0.4	0.016	**99.6%**
POST2_CTS_0527.LAB	9/20/19	12:53:22	0.0	0.0	100.3	-0.2	0.3	-0.037	**100.3%**

Native Effluent Prior to Analyte Spike

Spectrum	Date	Time	H2O% %v	CO2% %v	Ethylene ppmv wet	Acetaldehyde ppmv wet	Methanol ppmv wet	SF6 ppmv wet
RUN3_0581.LAB	9/20/19	13:36:24	2.6	0.1	0.1	0.6	0.3	0.001
RUN3_0582.LAB	9/20/19	13:37:24	2.8	0.1	0.0	0.4	0.3	-0.005
RUN3_0583.LAB	9/20/19	13:38:24	2.7	0.1	0.0	0.6	0.0	0.000
						0.5	**0.2**	**-0.001**

Effluent Spike Using Analyte Post Run 3

Spectrum	Date	Time	H2O% %v	CO2% %v	Ethylene ppmv wet	Acetaldehyde ppmv wet	Methanol ppmv wet	SF6 ppmv wet	Dilution Factor	Recovery % Acetaldehyde
POST3_SPIKE_0662.LAB	9/20/19	14:51:24	4.0	0.1	0.1	10.4	11.1	0.232	**4.7%**	**98.3%**
POST3_SPIKE_0663.LAB	9/20/19	14:51:31	4.1	0.1	0.1	10.9	11.5	0.246	**5.0%**	**97.7%**
POST3_SPIKE_0664.LAB	9/20/19	14:51:38	3.8	0.1	0.3	10.7	11.3	0.267	**5.4%**	**88.5%**
POST3_SPIKE_0665.LAB	9/20/19	14:51:46	4.0	0.1	0.6	11.1	13.1	0.258	**5.2%**	**94.5%**
POST3_SPIKE_0666.LAB	9/20/19	14:51:54	4.2	0.1	0.5	11.3	13.3	0.281	**5.7%**	**88.9%**
POST3_SPIKE_0667.LAB	9/20/19	14:52:01	3.9	0.1	0.2	12.6	12.6	0.262	**5.3%**	**105.7%**
POST3_SPIKE_0668.LAB	9/20/19	14:52:09	3.9	0.1	0.4	11.9	12.4	0.253	**5.1%**	**102.9%**
POST3_SPIKE_0669.LAB	9/20/19	14:52:16	4.0	0.1	0.4	12.2	12.8	0.274	**5.5%**	**98.0%**
							Average:		**5.2%**	**96.8%**

© Mostardi Platt

CTS, System Purge Post Run 3

Spectrum	Date	Time	H2O% %v	CO2% %v	Ethylene ppmv wet	Acetaldehyde ppmv wet	Methanol ppmv wet	SF6 ppmv wet	Recovery % Ethylene
POST3_CTS_SYS_0671.LAB	9/20/19	14:53:29	0.0	0.0	100.3	0.3	0.1	-0.014	**100.3%**
POST3_CTS_SYS_0672.LAB	9/20/19	14:53:36	0.0	0.0	100.1	1.1	0.5	0.012	**100.1%**
POST3_CTS_SYS_0673.LAB	9/20/19	14:53:43	0.0	0.0	99.9	0.2	-0.4	-0.010	**99.9%**
POST3_CTS_SYS_0674.LAB	9/20/19	14:53:51	0.0	0.0	99.8	1.1	-0.7	-0.020	**99.8%**
POST3_CTS_SYS_0675.LAB	9/20/19	14:53:58	0.0	0.0	99.4	-0.1	-0.1	-0.011	**99.4%**
POST3_CTS_SYS_0676.LAB	9/20/19	14:54:06	0.0	0.0	100.8	0.6	0.2	0.014	**100.8%**
POST3_CTS_SYS_0677.LAB	9/20/19	14:54:13	0.0	0.0	99.9	0.7	-0.4	-0.010	**99.9%**
POST3_CTS_SYS_0678.LAB	9/20/19	14:54:21	0.0	0.0	99.8	0.5	-0.3	-0.009	**99.8%**

CTS, Direct Purge

Spectrum	Date	Time	H2O% %v	CO2% %v	Ethylene ppmv wet	Acetaldehyde ppmv wet	Methanol ppmv wet	SF6 ppmv wet	Recovery % Ethylene
POST3_CTS_DIR_0711.LAB	9/20/19	15:20:51	0.0	0.0	99.0	0.5	-0.3	-0.025	**99.0%**
POST3_CTS_DIR_0712.LAB	9/20/19	15:20:59	0.0	0.0	99.2	0.9	0.0	-0.024	**99.2%**
POST3_CTS_DIR_0713.LAB	9/20/19	15:21:06	0.0	0.0	99.0	0.4	-0.2	-0.023	**99.0%**
POST3_CTS_DIR_0714.LAB	9/20/19	15:21:14	0.0	0.0	98.9	-0.1	-0.1	-0.020	**98.9%**
POST3_CTS_DIR_0715.LAB	9/20/19	15:21:21	0.0	0.0	99.3	0.2	-0.2	-0.013	**99.3%**
POST3_CTS_DIR_0716.LAB	9/20/19	15:21:29	0.0	0.0	99.2	0.5	-0.4	-0.024	**99.2%**
POST3_CTS_DIR_0717.LAB	9/20/19	15:21:36	0.0	0.0	99.3	-0.1	0.2	-0.021	**99.3%**
POST3_CTS_DIR_0718.LAB	9/20/19	15:21:44	0.0	0.0	99.0	0.6	-0.1	-0.019	**99.0%**
	Average				**99.1**				

Nitrogen, Direct Purge

Spectrum	Date	Time	H2O% %v	CO2% %v	Ethylene ppmv wet	Acetaldehyde ppmv wet	Methanol ppmv wet	SF6 ppmv wet
POST3_N2_DIR_0722.LAB	9/20/19	15:28:52	0.0	0.0	-0.1	0.8	0.1	-0.004
POST3_N2_DIR_0723.LAB	9/20/19	15:30:52	0.0	0.0	-0.1	0.6	-0.1	-0.003
POST3_N2_DIR_0724.LAB	9/20/19	15:32:52	0.0	0.0	0.0	0.6	0.0	-0.004

© Mostardi Platt

MOSTARDI PLATT

Procedures for Method 5 and Flow Calibration

Nozzles

The nozzles are measured according to Method 5, Section 10.1

Dry Gas Meters

The test meters are calibrated according to Method 5, Section 10.3 and 16.1. and “Procedures for Calibrating and Using Dry Gas Volume Meters as Calibration Standards” by P.R. Westlin and R.T. Shigehara, March 10, 1978.

Analytical Balance

The accuracy of the analytical balance is checked with Class S, Stainless Steel Type 303 weights manufactured by F. Hopken and Son, Jersey City, New Jersey.

Temperature Sensing Devices

The potentiometer and thermocouples are calibrated utilizing a NIST traceable millivolt source.

Pitot Tubes

The pitot tubes utilized during this test program are manufactured according to the specification described and illustrated in the *Code of Federal Regulations*, Title 40, Part 60, Appendix A, Methods 1 and 2. The pitot tubes comply with the alignment specifications in Method 2, Section 10.1; and the pitot tube assemblies are in compliance with specifications in the same section.

© Mostardi Platt

Dry Gas Meter/Control Module Calibration Diagram

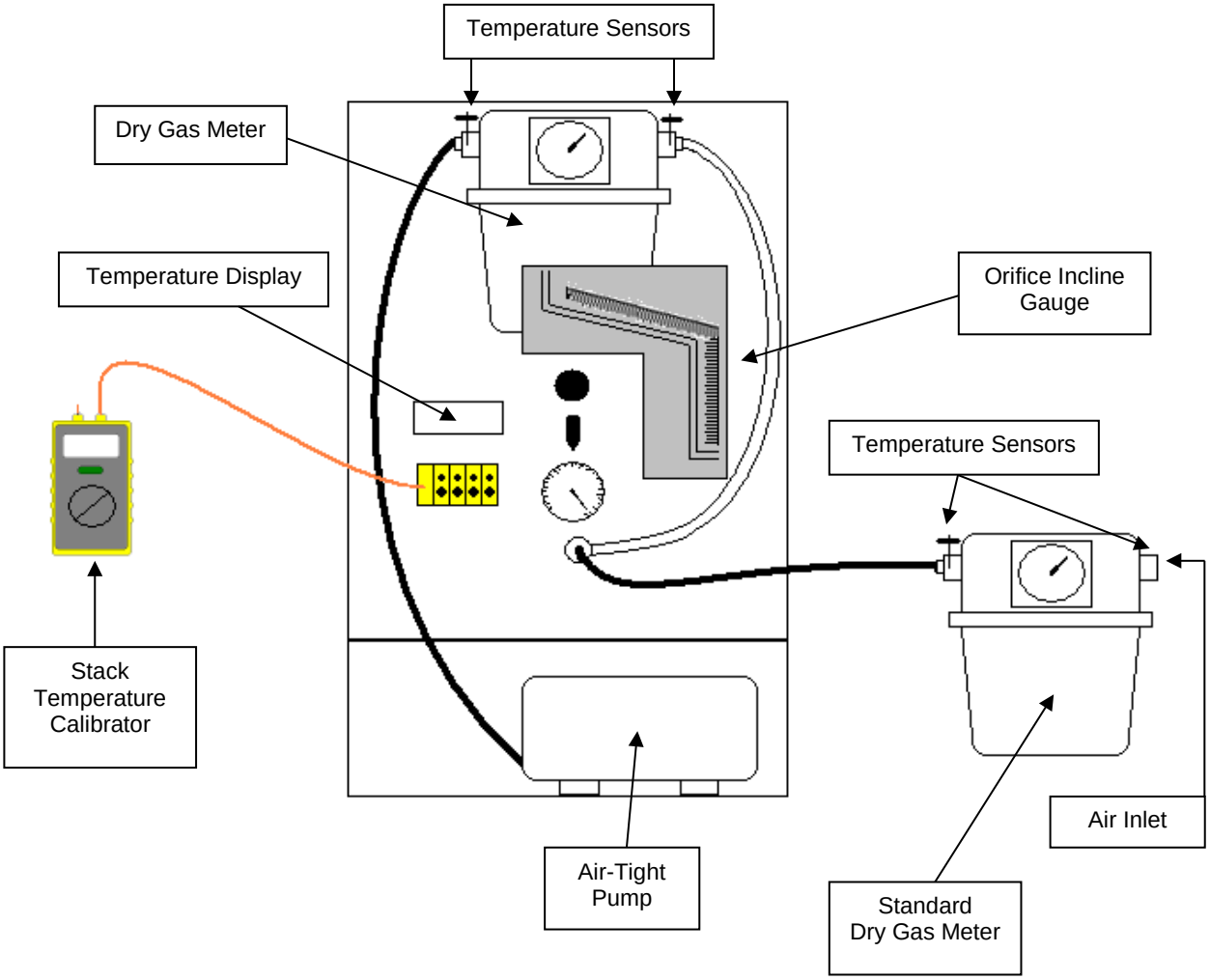

© Mostardi Platt

Meter Box Calibration

Dry Gas Meter Calibration Data

Dry Gas Meter No.	*CM25*	*Date:*	*September 16, 2019*
Standard Meter No.	*366118*	*Calibrated By:*	*LEM*
Standard Meter (Y)	*0.98716*	*Barometric Pressure:*	*29.44*

Run Number		Orifice Setting in H_2O Chg (H)	Standard Meter Gas Volume vr	Dry Gas Meter Gas Volume vd	Standard Meter Temp. F° tr	Dry Gas Meter Inlet Temp. F° tdi	Dry Gas Meter Outlet Temp. F° tdo	Dry Gas Meter Avg. Temp. F° td	Time Min	Time Sec	Y	Chg (H)
Final			58.245	17.530	72	75	74					
Initial			52.194	11.455	72	75	74					
Difference	1	0.20	6.051	6.075	72	75	74	75	22	14	0.987	1.588
Final			63.623	22.914	73	75	75					
Initial			58.451	17.740	72	75	75					
Difference	2	0.50	5.172	5.174	73	75	75	75	12	19	0.990	1.669
Final			72.005	31.322	73	78	75					
Initial			64.095	23.400	73	75	75					
Difference	3	0.70	7.910	7.922	73	77	75	76	16	16	0.989	1.743
Final			79.400	38.789	73	79	76					
Initial			72.294	31.625	73	78	75					
Difference	4	0.90	7.106	7.164	73	79	76	77	12	55	0.984	1.747
Final			79.400	38.789	73	79	76					
Initial			72.294	31.625	73	79	75					
Difference	5	1.20	7.106	7.164	73	79	76	77	11	20	0.984	1.792
Final			52.119	11.390	72	75	74					
Initial			45.816	5.126	72	74	74					
Difference	6	2.00	6.303	6.264	72	75	74	74	7	47	0.993	1.794
									Average		**0.988**	**1.722**

© Mostardi Platt

Stack Temperature Sensor Calibration

Meter Box # : CM25 *Name :* LEM

Ambient Temperature : 76 ^{o}F *Date :* September 16, 2019

Calibrator Model # : CL23A

Serial # : T-249465

Date Of Certification : May 9, 2019

Primary Standards Directly Traceable National Institute of Standards and Technology (NIST)

Reference Source Temperature (^{o}F)	Test Thermometer Temperature (^{o}F)	Temperature Difference %
0	-1	0.2
250	249	0.1
600	599	0.1
1200	1203	0.2

$$\frac{(\text{Ref. Temp., }^{o}\text{F} + 460) - (\text{Test Therm. Temp., }^{o}\text{F} + 460)}{\text{Ref. Temp., }^{o}\text{F} + 460} * 100 <= 1.5\ \%$$

© Mostardi Platt

Meter Box Calibration

Dry Gas Meter Calibration Data

Dry Gas Meter No.	*CM25*	*Date:*	*September 23, 2019*
Standard Meter No.	*1865430*	*Calibrated By:*	*JAP*
Standard Meter (Y)	*1.00490*	*Barometric Pressure:*	*29.29*

Run Number		Orifice Setting in H_2O Chg (H)	Standard Meter Gas Volume vr	Dry Gas Meter Gas Volume vd	Standard Meter Temp. F° tr	Dry Gas Meter Inlet Temp. F° tdi	Dry Gas Meter Outlet Temp. F° tdo	Dry Gas Meter Avg. Temp. F° td	Time Min	Time Sec	Y	Chg (H)
Final			17.209	35.840	69	73	72					
Initial			12.082	30.645	69	72	71					
Difference	1	0.20	5.127	5.195	69	73	72	72	20	19	0.997	1.779
Final			23.273	42.003	70	74	73					
Initial			17.778	36.411	69	73	72					
Difference	2	0.50	5.495	5.592	70	74	73	73	13	37	0.993	1.739
Final			29.071	47.898	70	74	73					
Initial			23.957	42.696	69	73	73					
Difference	3	0.70	5.114	5.202	70	74	73	73	10	41	0.993	1.730
Final			35.241	54.160	69	76	73					
Initial			29.919	48.751	70	74	73					
Difference	4	0.90	5.322	5.409	70	75	73	74	9	55	0.995	1.767
Final			43.169	62.185	70	76	74					
Initial			36.114	55.041	70	75	73					
Difference	5	1.20	7.055	7.144	70	76	74	75	11	30	0.998	1.805
Final			11.755	30.299	68	73	71					
Initial			6.442	24.934	69	71	71					
Difference	6	2.00	5.313	5.365	69	72	71	72	6	42	0.996	1.800
									Average		**0.995**	**1.770**

© Mostardi Platt

Stack Temperature Sensor Calibration

Meter Box # : CM25 *Name :* JAP

Ambient Temperature : 73 ^{o}F *Date :* September 23, 2019

Calibrator Model # : CL23A

Serial # : T-249465

Date Of Certification : May 9, 2019

Primary Standards Directly Traceable National Institute of Standards and Technology (NIST)

Reference Source Temperature (^{o}F)	Test Thermometer Temperature (^{o}F)	Temperature Difference %
0	-1	0.2
250	249	0.1
600	598	0.2
1200	1202	0.1

$$\frac{(\text{Ref. Temp., }^{o}\text{F} + 460) - (\text{Test Therm. Temp., }^{o}\text{F} + 460)}{\text{Ref. Temp., }^{o}\text{F} + 460} * 100 <= 1.5\ \%$$

© Mostardi Platt

Meter Box Calibration

Dry Gas Meter Calibration Data

Dry Gas Meter No.	*CM31*	*Date:*	*September 6, 2019*
Standard Meter No.	*366118*	*Calibrated By:*	*KJW*
Standard Meter (Y)	*0.98716*	*Barometric Pressure:*	*29.29*

Run Number		Orifice Setting in H_2O Chg (H)	Standard Meter Gas Volume vr	Dry Gas Meter Gas Volume vd	Standard Meter Temp. F° tr	Dry Gas Meter Inlet Temp. F° tdi	Dry Gas Meter Outlet Temp. F° tdo	Dry Gas Meter Avg. Temp. F° td	Time Min	Time Sec	Y	Chg (H)
Final			86.085	93.952	79	82	80					
Initial			81.031	88.910	79	81	79					
Difference	1	0.20	5.054	5.042	79	82	80	81	19	4	0.992	1.708
Final			91.441	99.272	79	84	81					
Initial			86.345	94.209	79	82	80					
Difference	2	0.50	5.096	5.063	79	83	81	82	12	36	0.997	1.829
Final			97.299	105.103	79	85	82					
Initial			91.861	99.696	79	84	81					
Difference	3	0.70	5.438	5.407	79	85	82	83	11	32	0.998	1.880
Final			102.679	110.469	79	86	84					
Initial			97.619	105.432	79	85	82					
Difference	4	0.90	5.060	5.037	79	86	83	84	9	32	0.999	1.903
Final			107.962	115.729	80	87	84					
Initial			102.916	110.710	79	86	84					
Difference	5	1.20	5.046	5.019	80	87	84	85	8	37	1.000	2.085
Final			80.800	88.679	79	81	79					
Initial			75.334	83.311	79	79	78					
Difference	6	2.00	5.466	5.368	79	80	79	79	7	4	1.001	2.010
									Average		**0.998**	**1.903**

© Mostardi Platt

Stack Temperature Sensor Calibration

Meter Box # : CM31 *Name :* KJW

Ambient Temperature : 76 ^{o}F *Date :* September 6, 2019

Calibrator Model # : CL23A

Serial # : T-285668

Date Of Certification : May 9, 2019

Primary Standards Directly Traceable National Institute of Standards and Technology (NIST)

Reference Source Temperature (^{o}F)	***Test Thermometer Temperature (^{o}F)***	***Temperature Difference %***
0	*5*	1.1
250	*254*	0.6
600	*601*	0.1
1200	*1197*	0.2

$$\frac{(\text{Ref. Temp., }^{o}\text{F} + 460) - (\text{Test Therm. Temp., }^{o}\text{F} + 460)}{\text{Ref. Temp., }^{o}\text{F} + 460} * 100 <= 1.5\ \%$$

© Mostardi Platt

Meter Box Calibration

Dry Gas Meter Calibration Data

Dry Gas Meter No.	*CM31*	*Date:*	*September 23, 2019*
Standard Meter No.	*366118*	*Calibrated By:*	*KJW*
Standard Meter (Y)	*0.98716*	*Barometric Pressure:*	*29.32*

Run Number		Orifice Setting in H_2O Chg (H)	Standard Meter Gas Volume vr	Dry Gas Meter Gas Volume vd	Standard Meter Temp. F° tr	Dry Gas Meter Inlet Temp. F° tdi	Dry Gas Meter Outlet Temp. F° tdo	Dry Gas Meter Avg. Temp. F° td	Time Min	Time Sec	Y	Chg (H)
Final			81.187	46.716	78	81	78					
Initial			75.759	41.322	77	81	76					
Difference	1	0.20	5.428	5.394	78	81	77	79	20	29	0.996	1.702
Final			86.643	52.131	78	83	80					
Initial			81.612	47.131	78	81	78					
Difference	2	0.50	5.031	5.000	78	82	79	81	12	27	0.997	1.828
Final			92.204	57.666	79	84	81					
Initial			87.165	52.653	78	83	80					
Difference	3	0.70	5.039	5.013	79	84	81	82	10	43	0.997	1.889
Final			97.682	63.094	78	84	81					
Initial			92.600	58.060	79	84	81					
Difference	4	0.90	5.082	5.034	79	84	81	83	9	37	1.002	1.921
Final			103.139	68.505	87	85	81					
Initial			98.049	63.462	78	84	81					
Difference	5	1.20	5.090	5.043	83	85	81	83	8	37	0.994	2.079
Final			75.425	40.981	77	81	76					
Initial			69.992	35.674	77	77	76					
Difference	6	2.00	5.433	5.307	77	79	76	78	6	59	1.006	1.976
									Average		**0.999**	**1.899**

© Mostardi Platt

Stack Temperature Sensor Calibration

Meter Box # : CM31 *Name :* KJW

Ambient Temperature : 73 ^{o}F *Date :* September 6, 2019

Calibrator Model # : CL23A

Serial # : T-285668

Date Of Certification : May 9, 2019

Primary Standards Directly Traceable National Institute of Standards and Technology (NIST)

Reference Source Temperature (^{o}F)	Test Thermometer Temperature (^{o}F)	Temperature Difference %
0	6	1.3
250	255	0.7
600	601	0.1
1200	1197	0.2

$$\frac{(\text{Ref. Temp., }^{o}\text{F} + 460) - (\text{Test Therm. Temp., }^{o}\text{F} + 460)}{\text{Ref. Temp., }^{o}\text{F} + 460} * 100 <= 1.5\ \%$$

© Mostardi Platt

S TYPE PITOT TUBE INSPECTION WORKSHEET

Pitot Tube No: 6 Date: 9/12/2019 Inspectors Name: JAP

Type of Probe: (circle one) M2 M5 M17 Probe Length: 6 ft.

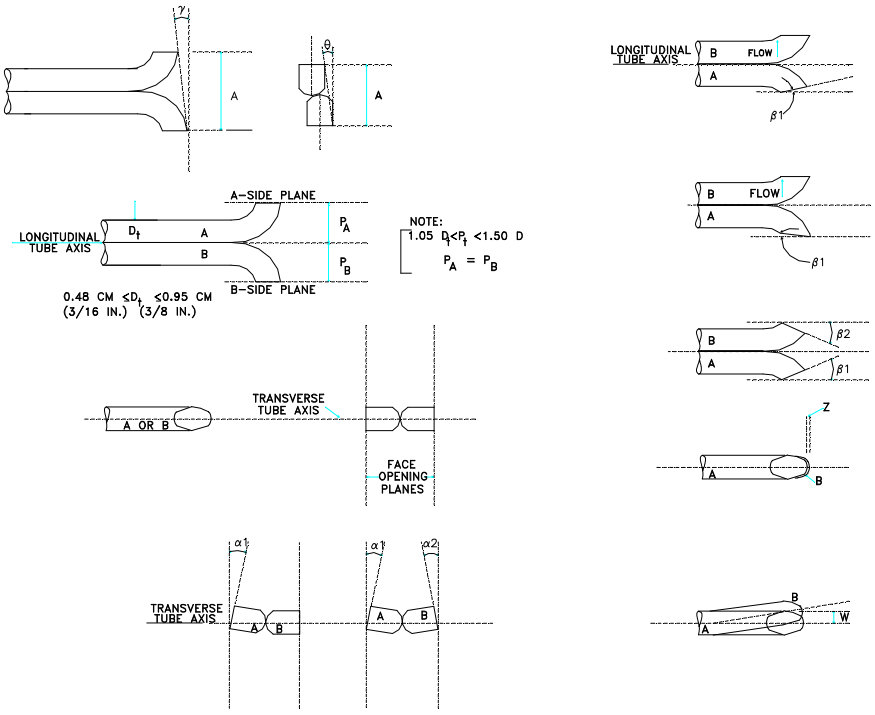

Pitot tube assembly level? X yes ____ no

Pitot tube openings damaged? ____ yes (explain below) X no

a_1 = 2 ° (<10°), a_2 = 2 ° (<10°) z = A sin g = 0.000 (in.); (<0.125 in.)

b_1 = 2 ° (<5°), b_2 = 2 ° (<5°) w = A sin q = 0.008 (in.); (<0.03125 in.)

γ = 1 °, θ = 0.5 °, A = 0.950 (in.) P_A = 0.475 (in.), P_B = 0.475 (in.), D_t = 0.375 (in.)

Calibration required? ____ yes X no

© Mostardi Platt

S TYPE PITOT TUBE INSPECTION WORKSHEET

Pitot Tube No: 6 Date: 9/25/2019 Inspectors Name: JAP

Type of Probe: (circle one) M2 M5 M17 Probe Length: 6 ft.

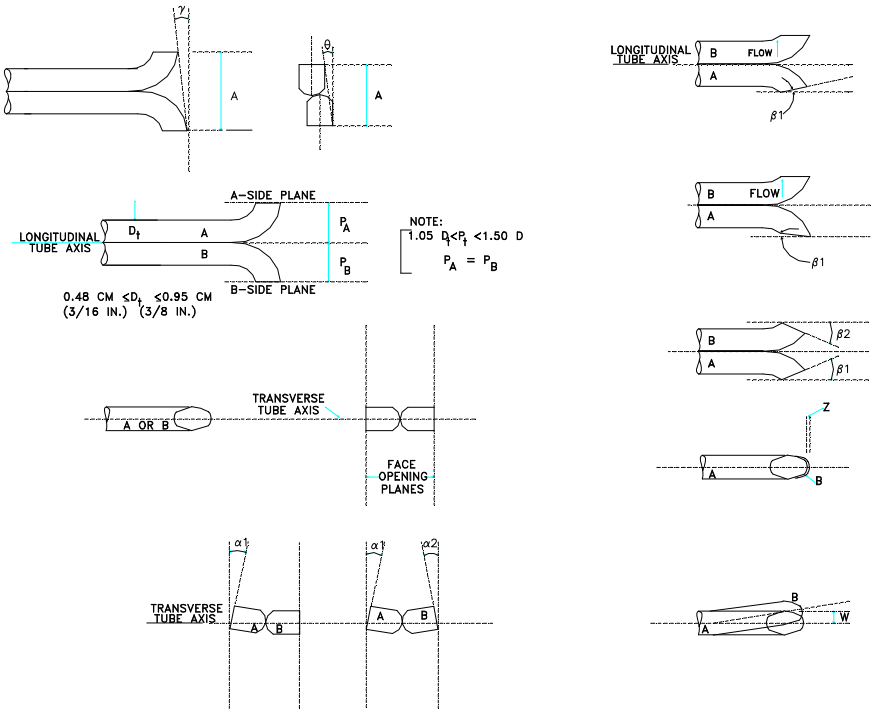

Pitot tube assembly level? X yes ____ no

Pitot tube openings damaged? ____ yes (explain below) X no

a_1 = 1 ° (<10°), a_2 = 1 ° (<10°) z = A sin g = 0.000 (in.); (<0.125 in.)

b_1 = 1.5 ° (<5°), b_2 = 1 ° (<5°) w = A sin q = 0.008 (in.); (<0.03125 in.)

γ = 0 °, θ = 0.5 °, A = 0.930 (in.) P_A = 0.465 (in.), P_B = 0.465 (in.), D_t = 0.375 (in.)

Calibration required? ____ yes X no

© Mostardi Platt

S TYPE PITOT TUBE INSPECTION WORKSHEET

Pitot Tube No: 320 Date: 9/6/2019 Inspectors Name: JAP

Type of Probe: (circle one) **M2** M5 M17 Probe Length: 6 ft.

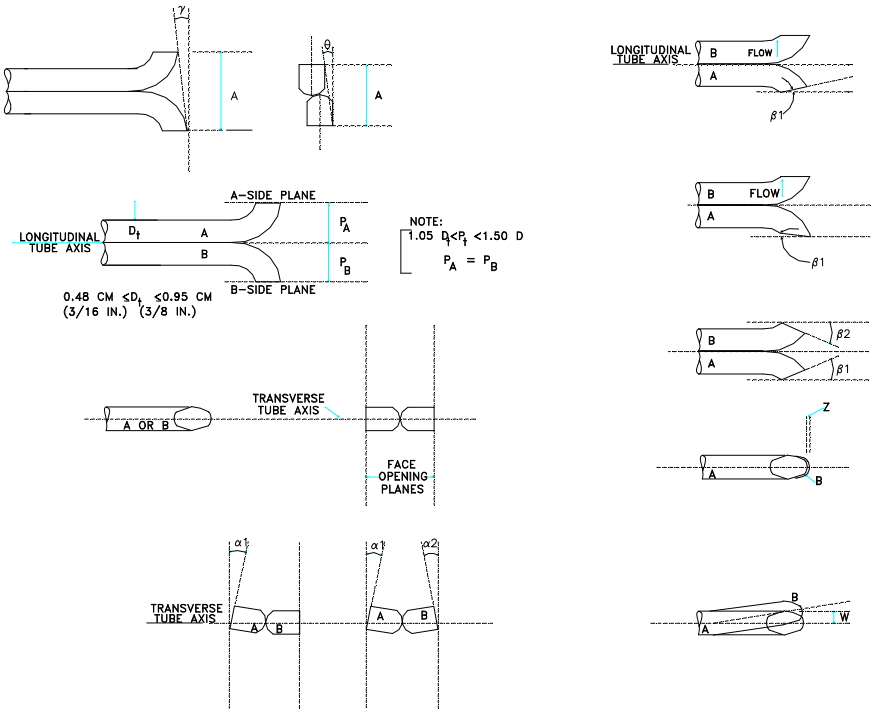

Pitot tube assembly level? X yes ____ no

Pitot tube openings damaged? ____ yes (explain below) X no

a_1 = 0.5 ° (<10°), a_2 = 1.5 ° (<10°) z = A sin g = 0.000 (in.); (<0.125 in.)

b_1 = 1 ° (<5°), b_2 = 1 ° (<5°) w = A sin q = 0.025 (in.); (<0.03125 in.)

γ = 0.5 °, θ = 1.5 °, A = 0.970 (in.) P_A = 0.485 (in.), P_B = 0.485 (in.), D_t = 0.375 (in.)

Calibration required? ____ yes X no

© Mostardi Platt

S TYPE PITOT TUBE INSPECTION WORKSHEET

Pitot Tube No: 320 Date: 9/25/2019 Inspectors Name: JAP

Type of Probe: (circle one) **M2** M5 M17 Probe Length: 6 ft.

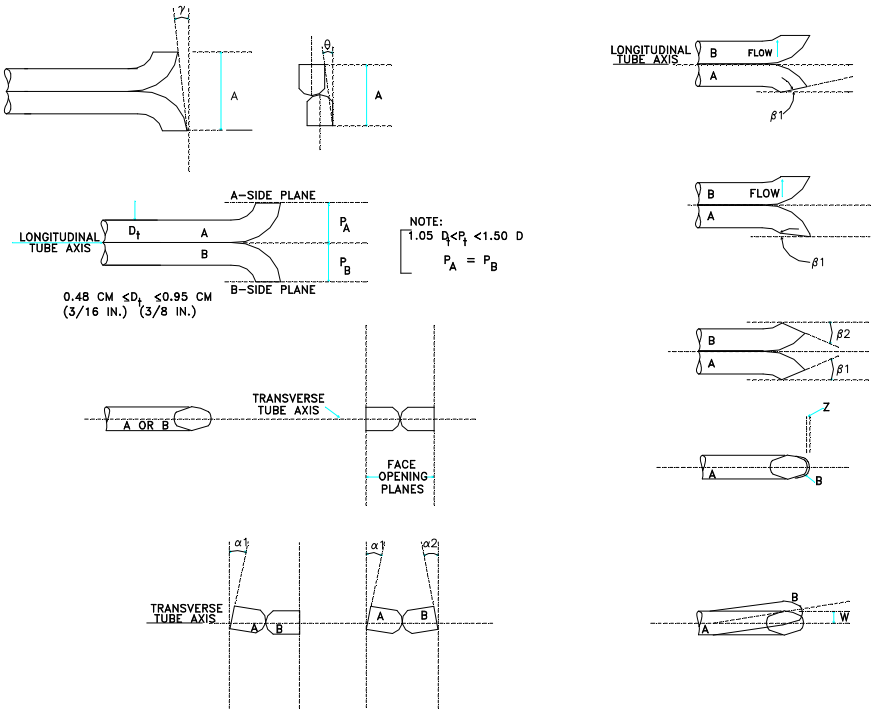

Pitot tube assembly level? X yes ____ no

Pitot tube openings damaged? ____ yes (explain below) X no

a_1 = 0 ° (<10°), a_2 = 2 ° (<10°) z = A sin g = 0.000 (in.); (<0.125 in.)

b_1 = 0.5 ° (<5°), b_2 = 2 ° (<5°) w = A sin q = 0.017 (in.); (<0.03125 in.)

γ = 0 °, θ = 1 °, A = 0.980 (in.) P_A = 0.490 (in.), P_B = 0.490 (in.), D_t = 0.375 (in.)

Calibration required? ____ yes X no

© Mostardi Platt

Nozzle Calibration

Date: 6/16/2017

Nozzle ID No.: 3T-6

Analyst: MDK

Material/Type: Teflon

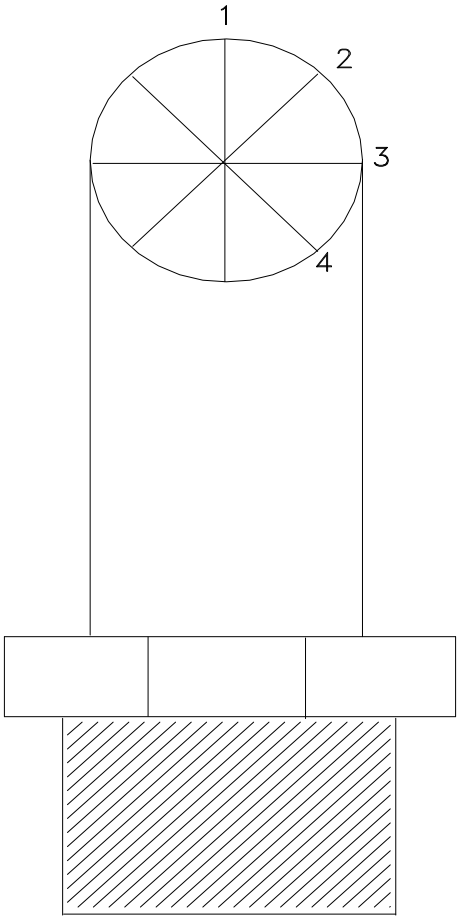

0.170	1
0.170	2
0.170	3
0.170	4

\

Valid Data

Average
0.170

© Mostardi Platt

Nozzle Calibration

Date: 10/11/2016

Nozzle ID No.: 6T-1

Analyst: ADT

Material/Type: Teflon

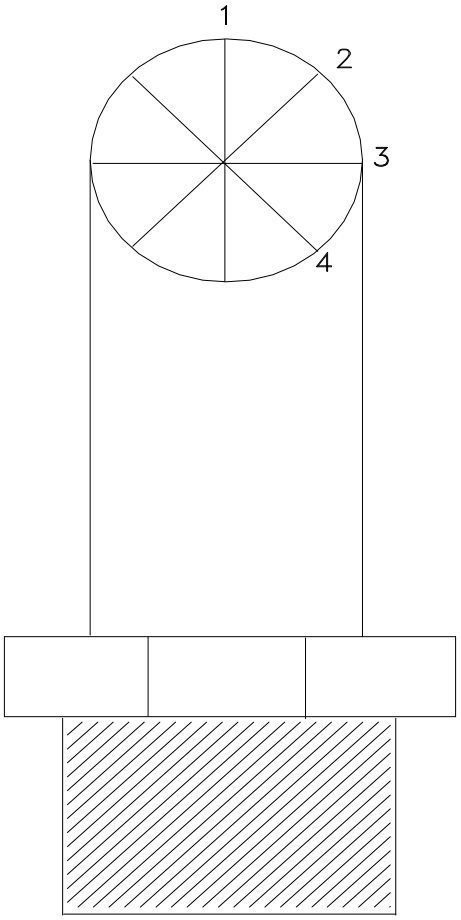

0.173	1
0.174	2
0.174	3
0.175	4

Valid Data

Average
0.174

© Mostardi Platt

Appendix I- Gas Cylinder Certifications

© Mostardi Platt

Airgas

Airgas USA, LLC
Airgas Specialty Gases
12722 S. Wentworth Avenue
Chicago, IL 60628
773-785-3000 Fax: 773 785-1928
Airgas.com

CERTIFICATE OF ANALYSIS

Grade of Product: EPA Protocol

Part Number:	E02AI99E15A0705	Reference Number:	54-124563196-1
Cylinder Number:	EB0065467	Cylinder Volume:	146.2 CF
Laboratory:	ASG - Chicago - IL	Cylinder Pressure:	2015 PSIG
PGVP Number:	B12016	Valve Outlet:	590
Gas Code:	PPN,BALA	Certification Date:	Jul 05, 2016

Expiration Date: Jul 05, 2024

Certification performed in accordance with "EPA Traceability Protocol for Assay and Certification of Gaseous Calibration Standards (May 2012)" document EPA 600/R-12/531, using the assay procedures listed. Analytical Methodology does not require correction for analytical interference. This cylinder has a total analytical uncertainty as stated below with a confidence level of 95%. There are no significant impurities which affect the use of this calibration mixture. All concentrations are on a volume/volume basis unless otherwise noted.

Do Not Use This Cylinder below 100 psig, i.e. 0.7 megapascals.

ANALYTICAL RESULTS

Component	Requested Concentration	Actual Concentration	Protocol Method	Total Relative Uncertainty	Assay Dates
PROPANE	30.00 PPM	30.03 PPM	G1	+/- 0.7% NIST Traceable	07/05/2016
AIR	Balance				

CALIBRATION STANDARDS

Type	Lot ID	Cylinder No	Concentration	Uncertainty	Expiration Date
NTRM	13060520	CC417457	50.80 PPM PROPANE/NITROGEN	+/- 0.6%	Feb 26, 2019

ANALYTICAL EQUIPMENT

Instrument/Make/Model	Analytical Principle	Last Multipoint Calibration
Nicolet 6700 AHR0801332	FTIR	Jun 06, 2016

Triad Data Available Upon Request

Approved for Release

© Mostardi Platt

Airgas
an Air Liquide company

Airgas Specialty Gases
Airgas USA, LLC
12722 S. Wentworth Ave.
Chicago, IL 60628
Airgas.com

CERTIFICATE OF ANALYSIS

Grade of Product: EPA Protocol

Part Number:	E02AI99E15A1877	Reference Number:	54-401424229-1
Cylinder Number:	EB0039469	Cylinder Volume:	146.2 CF
Laboratory:	124 - Chicago (SAP) - IL	Cylinder Pressure:	2015 PSIG
PGVP Number:	B12019	Valve Outlet:	590
Gas Code:	PPN,BALA	Certification Date:	Feb 22, 2019

Expiration Date: Feb 22, 2027

Certification performed in accordance with "EPA Traceability Protocol for Assay and Certification of Gaseous Calibration Standards (May 2012)" document EPA 600/R-12/531, using the assay procedures listed. Analytical Methodology does not require correction for analytical interference. This cylinder has a total analytical uncertainty as stated below with a confidence level of 95%. There are no significant impurities which affect the use of this calibration mixture. All concentrations are on a volume/volume basis unless otherwise noted.

Do Not Use This Cylinder below 100 psig, i.e. 0.7 megapascals.

ANALYTICAL RESULTS

Component	Requested Concentration	Actual Concentration	Protocol Method	Total Relative Uncertainty	Assay Dates
PROPANE	60.00 PPM	60.46 PPM	G1	+/- 0.6% NIST Traceable	02/22/2019
AIR	Balance				

CALIBRATION STANDARDS

Type	Lot ID	Cylinder No	Concentration	Uncertainty	Expiration Date
NTRM	16060318	CC471451	99.7 PPM PROPANE/AIR	+/- 0.5%	Nov 16, 2021

ANALYTICAL EQUIPMENT

Instrument/Make/Model	Analytical Principle	Last Multipoint Calibration
Nicolet 6700 AHR0801332	FTIR	Jan 28, 2019

Triad Data Available Upon Request

Approved for Release

© Mostardi Platt

Airgas
an Air Liquide company

Airgas Specialty Gases
Airgas USA, LLC
12722 S. Wentworth Ave.
Chicago, IL 60628
Airgas.com

CERTIFICATE OF ANALYSIS

Grade of Product: EPA Protocol

Part Number:	E02AI99E15A0565	Reference Number:	54-401503217-1
Cylinder Number:	CC401436	Cylinder Volume:	146.2 CF
Laboratory:	124 - Chicago (SAP) - IL	Cylinder Pressure:	2015 PSIG
PGVP Number:	B12019	Valve Outlet:	590
Gas Code:	PPN,BALA	Certification Date:	May 31, 2019

Expiration Date: May 31, 2027

Certification performed in accordance with "EPA Traceability Protocol for Assay and Certification of Gaseous Calibration Standards (May 2012)" document EPA 600/R-12/531, using the assay procedures listed. Analytical Methodology does not require correction for analytical interference. This cylinder has a total analytical uncertainty as stated below with a confidence level of 95%. There are no significant impurities which affect the use of this calibration mixture. All concentrations are on a volume/volume basis unless otherwise noted.

Do Not Use This Cylinder below 100 psig, i.e. 0.7 megapascals.

ANALYTICAL RESULTS

Component	Requested Concentration	Actual Concentration	Protocol Method	Total Relative Uncertainty	Assay Dates
PROPANE	90.00 PPM	91.43 PPM	G1	+/- 0.5% NIST Traceable	05/31/2019
AIR	Balance				

CALIBRATION STANDARDS

Type	Lot ID	Cylinder No	Concentration	Uncertainty	Expiration Date
NTRM	16060318	CC471451	99.7 PPM PROPANE/AIR	+/- 0.5%	Nov 16, 2021

ANALYTICAL EQUIPMENT

Instrument/Make/Model	Analytical Principle	Last Multipoint Calibration
Nicolet 6700 AHR0801332	FTIR	May 28, 2019

Triad Data Available Upon Request

Approved for Release

© Mostardi Platt

Airgas
an Air Liquide company

Airgas Specialty Gases
Airgas USA, LLC
6141 Easton Road
Bldg 1
Plumsteadville, PA 18949
Airgas.com

CERTIFICATE OF ANALYSIS

Grade of Product: CERTIFIED HYDROCARBON

Part Number:	X04NI99C15A00B5	Reference Number:	160-401512084-1
Cylinder Number:	CC718237	Cylinder Volume:	144.4 CF
Laboratory:	124 - Plumsteadville - PA	Cylinder Pressure:	2015 PSIG
Analysis Date:	Jun 10, 2019	Valve Outlet:	350SS
Lot Number:	160-401512084-1	Expiration Date:	Jun 10, 2020

Traceability Statement: Hydrocarbon Process standards are NIST traceable either directly by weight or by comparison to Airgas laboratory standards that are directly NIST traceable by weight.

CERTIFIED CONCENTRATIONS

Component	Requested Concentration	Reported Mole %	Accuracy
SULFUR HEXAFLUORIDE	5.000 PPM	5.099 PPM	+/- 5%
ACETALDEHYDE	200.0 PPM	201.1 PPM	+/- 2%
METHANOL	200.0 PPM	212.1 PPM	+/- 2%
NITROGEN	Balance	Balance	

Permanent Notes:-NA-

Approved for Release

© Mostardi Platt

Airgas
an Air Liquide company

Airgas Specialty Gases
Airgas USA, LLC
12722 S. Wentworth Ave.
Chicago, IL 60628
Airgas.com

CERTIFICATE OF ANALYSIS

Grade of Product: PRIMARY STANDARD

Part Number:	X02NI99P15AD524	Reference Number:	54-401514125-1
Cylinder Number:	EB0002598	Cylinder Volume:	144.4 CF
Laboratory:	124 - Chicago (SAP) - IL	Cylinder Pressure:	2015 PSIG
Analysis Date:	Jun 05, 2019	Valve Outlet:	350
Lot Number:	54-401514125-1		

Expiration Date: Jun 05, 2022

Primary Standard Gas Mixtures are traceable to N.I.S.T. weights and/or N.I.S.T. Gas Mixture reference materials.

ANALYTICAL RESULTS

Component	Req Conc	Actual Concentration (Mole %)	Analytical Uncertainty
ETHYLENE	100.0 PPM	100.0 PPM	+/- 1%
NITROGEN	Balance		

Approved for Release

© Mostardi Platt

END OF THE REPORT

© Mostardi Platt