# METRO PLANT ASH ROUTING

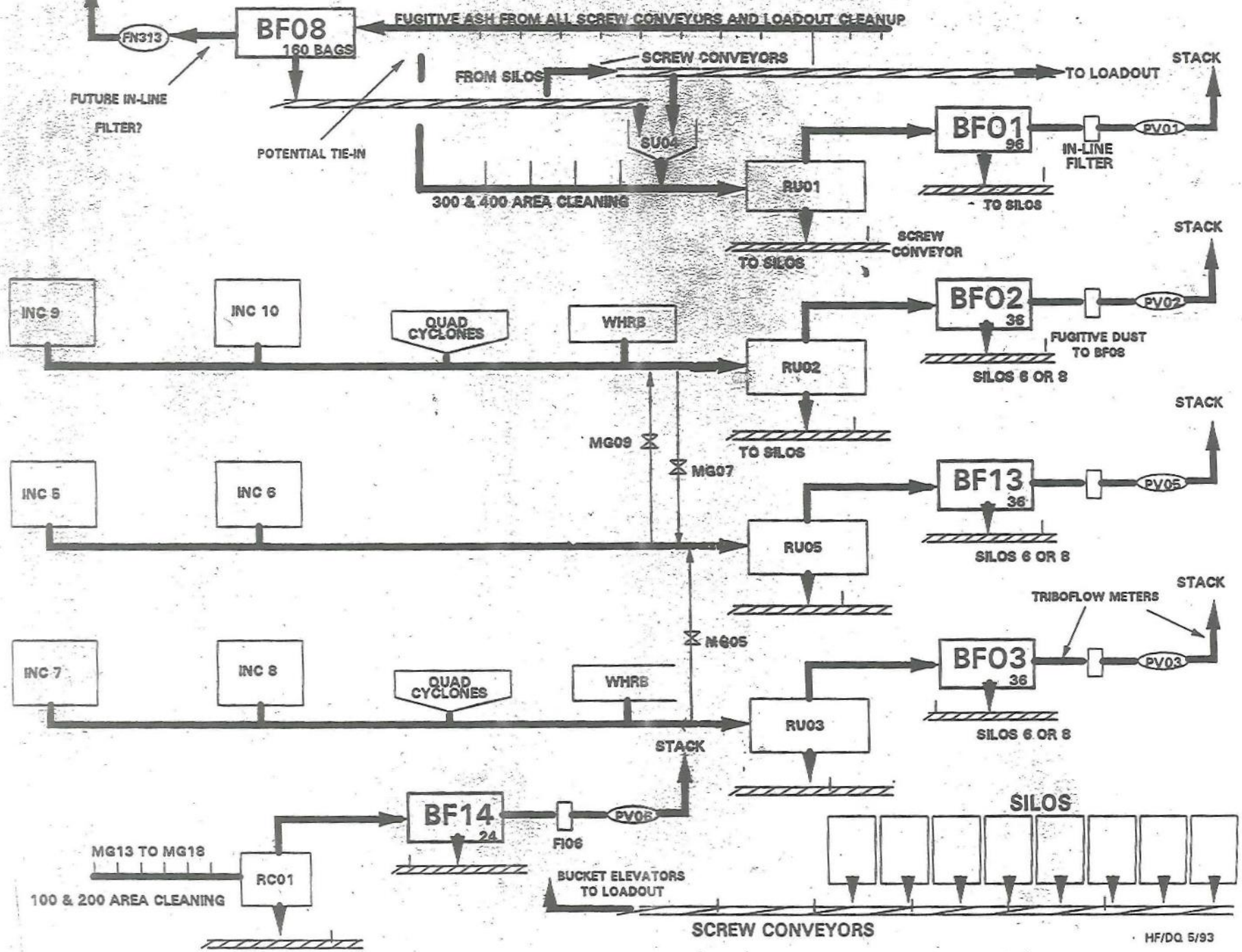

# PNEUMATIC ASH SYSTEM

## TYPICAL ASH FLOW RATES PER INCINERATOR

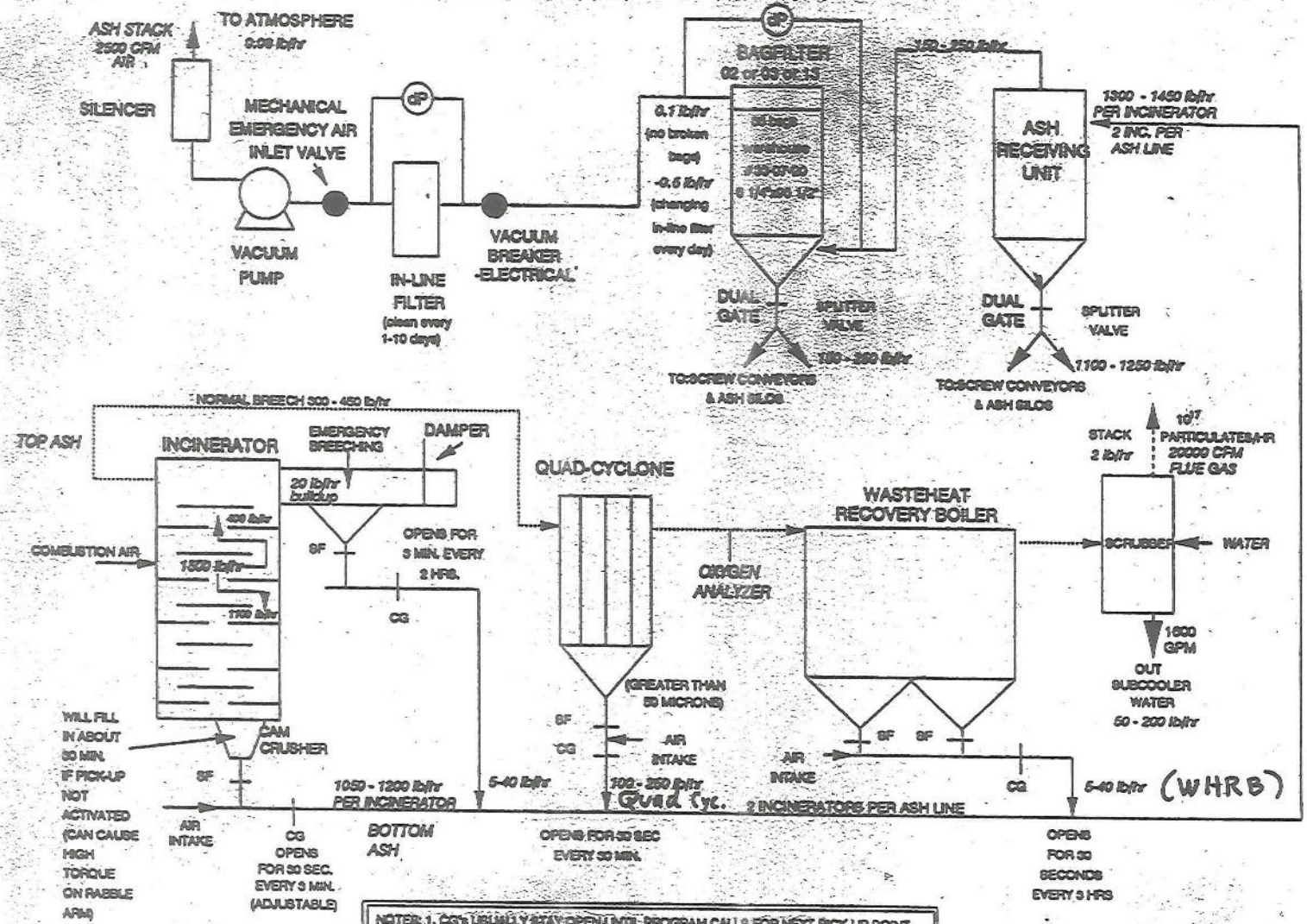


NOTES: 1. CG's USUALLY STAY OPEN UNTIL PROGRAM CALLS FOR NEXT PICK-UP POINT
2. TYPICAL ASH FLOWS (APPROXIMATE) BASED ON DATA COMPILED BY STEVE GREENWOOD, STEVE BALOGH AND 1990 ASH STACK TEST
3. DRY ASH DENSITY: 40 LB/CUBIC FOOT (UNCOMPACTED) RANGE 30-60 LB/C.F.

HF 2/92
REV DG, JK 1/93