COMPLIANCE TEST REPORT

Version 1.0

As Defined By The
Code of Federal Regulations; Title 40 Part 60 & State Permit

RECEIVED
SEP 25 2009
AIR ENFORCEMENT BRANCH
U.S. EPA, REGION 5

RMCEINC Project #2009-11029

LAFARGE - NORTH AMERICA
JOPPA PLANT
KILNS 1 & 2 STACK
JOPPA, ILLINOIS

Facility ID# 127855AAA

PREPARED FOR:
LAFARGE NORTH AMERICA

BY:
RMC ENVIRONMENTAL, INC. – CHICAGO REGIONAL OFFICE

TABLE OF CONTENTS

1.0 INTRODUCTION **2**
1.1 Company Information 2
1.2 Test Information 2
2.0 EMISSION SOURCE INFORMATION **2**
2.1 Facility Description, Process Information, and Emission Source Description 2
SAFETY NOTICE **3**
3.0 SOURCE TEST PROGRAM DESCRIPTION **5**
3.1 Test Contractor 5
3.2 Test Program Organization 5
3.3 Test Program Objectives 5
4.0 REFERENCE TEST EQUIPMENT AND PROCEDURES **6**
4.1 Instrumentation and Equipment Procedures 6
4.1.1 Compliance Testing - Volumetric Flow Rates 6
4.1.2 Filterable Particulate Emissions Testing 6
4.2 Test Methods 7
4.3 Analytical Methods 7
4.4 Sample Data 7
5.0 QUALITY ASSURANCE AND EQUIPMENT CALIBRATION **7**
6.0 SOURCE TEST REPORT **8**
6.1 Report Format 8
6.2 Data Reduction Procedures/ Methods 8

APPENDIX A. REFERENCE DATA SUMMARIES ..... **A**
APPENDIX B. ISOKENETIC DATA ..... **B**
APPENDIX C. ANALYTICAL DATA ..... **C**
APPENDIX D REFERENCE METHOD SYSTEM PERFORMANCE DATA ..... **D**
APPENDIX E. PROCESS DATA ..... **E**

LIST OF TABLES AND FIGURES

FIGURE 4.4-1 Diagram of Kiln 1 Test Location 3
FIGURE 4.4-2 Diagram of Kiln 2 Test Location 4
TABLE 3.3-1 Facility Compliance Test Results and Permitted Limits 6
FIGURE 6.2-1 Example Calculations 9

1.0 INTRODUCTION

1.1 Company Information

Name & Mailing Address:	Lafarge North America Joppa Plant 2500 Portland Road Grand Chain, Illinois 62941
Contact:	Mr. Louis Derose
Title:	Sr. Environmental Mgr.
Telephone Number:	618-543-3925
Email:	Louis.Derose@lafarge-na.com

Facility ID Number:	127855AAA
Source tested:	Kilns 1 & 2 Stacks

1.2 Test Information

Test Requested By:	Lafarge North America, Joppa Plant	
Source Contact:	Mr. Louis Derose	
Telephone Number:	618-543-3925	
Test Objective:	CFR, Title 40 Part 60, PC MACT Testing	
Test Methods:	1, 2, 3, 4 & 5	
Test Dates:	August 25-26, 2009	
Source Test Coordinators:	Mr. Louis Derose	Lafarge – Joppa Plant
On-Site RMCEINC Supervisor:	Gregory Chleborowicz	RMC Environmental, Inc. (RMCEINC)

2.0 EMISSION SOURCE INFORMATION

2.1 Facility Description, Process Information, and Emission Source Description

The heart of the Portland cement manufacturing process is the pyroprocessing system, which transforms raw mix into "clinker". The sequence of events that leads up to the final product can be divided into four stages:

1). Evaporation of uncombined water as the material temperature increases to 100°C.

2). Dehydration as the temperature of the material increases from 100°C to 430°C.

3). Calcination occurs between 900°C and 982°C and forms calcium oxide (CaO). During this stage, carbon dioxide (CO_2) evolves.

4). Reaction of the oxides in the kiln's burning zone form cement "clinker" at approximately 1510°C.

The kilns at the Lafarge North America - Joppa Facility use coal, petroleum coke and whole tires as fuel. The hot gases exit the feed end of the kiln, continue up the riser, through pre-heater cyclones and a spray water tower to cool the gases before entering the bag house at a temperature of 450 - 500°F. An induced draft fan, located between the bag house and the stack, draws the gases from the kiln and the bag house and pushes it up the stack. The primary emissions from this facility are particulate matter (PM), sulfur dioxide (SO_2), oxides of nitrogen (NO_X), carbon monoxide (CO) and carbon dioxide (CO_2). This test program is to determine compliance with the newly instituted PC MACT specifications regulating all Portland Cement Facilities.

Diagrams of the Stack Locations are presented in **Figure 4.4-1 & 4.4-2**

SAFETY NOTICE

The minimum facility personal safety requirements include safety glasses, hearing protection and leather boots.

FIGURE 4.4-1 Diagram of Kiln 1 Test Location

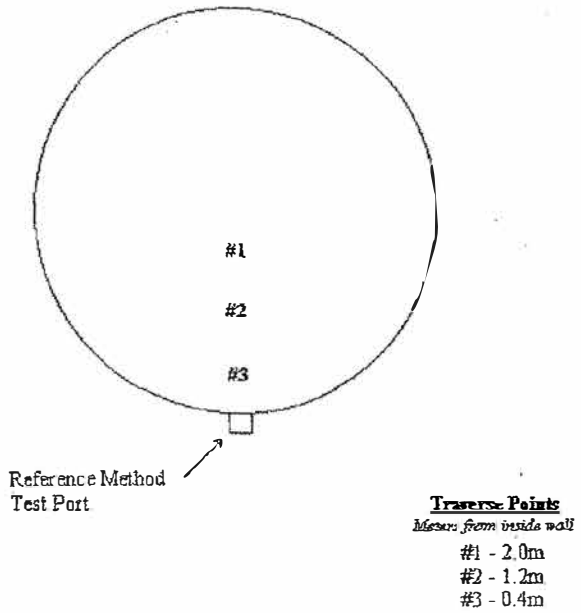

Stack Information

Shape of the test plane	Round
Internal diameter	108"
Reference sampling system approximate height (AGL)	150'
Source sampling system approximate height (AGL)	125'
Reference CEM Sampling Port (Est. Offset from North)	270°
Reference Flow Sampling Ports (Est. Offset from North)	75°, 165°
Source CEM Sampling Port (Est. Offset from North)	105°
Source Flow Sampling Port (Est. Offset from North)	90°

FIGURE 4.4-2 Diagram of Kiln 2 Test Location

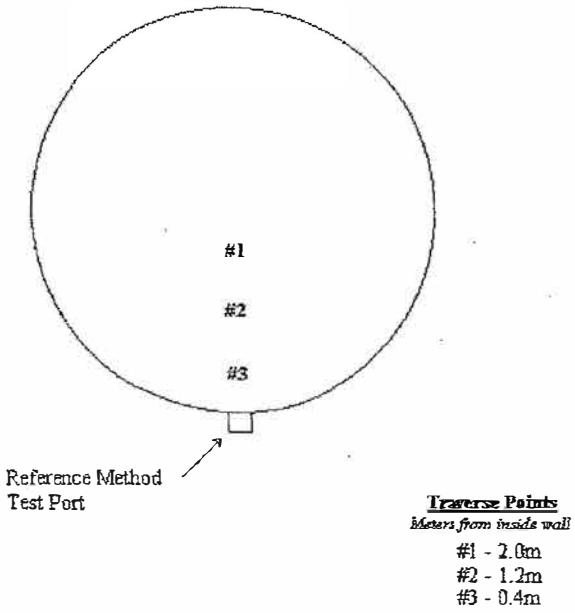

Stack Information

Shape of the test plane	Round
Internal diameter	102"
Reference sampling system approximate height (AGL)	150'
Source sampling system approximate height (AGL)	120'
Reference CEM Sampling Port (Est. Offset from North)	270°
Reference Flow Sampling Ports (Est. Offset from North)	75°, 165°
Source CEM Sampling Port (Est. Offset from North)	105°
Source Flow Sampling Port (Est. Offset from North)	90°

3.0 SOURCE TEST PROGRAM DESCRIPTION

3.1 Test Contractor

Name and Address:	RMC ENVIRONMENTAL, INC. (RMCEINC) 9226 North 2nd Street, Suite D Machesney Park, Illinois 61115
Contact:	Rachel Chleborowicz – Sr. Project Manager
Telephone Number:	815-378-6150 Mobile 815-425-1102 Fax RMCE@AirMonitoring.com

3.2 Test Program Organization

Test Team Participants:	Gregory Chleborowicz	RMCEINC, Project Manager
	Andrew McDermand	RMCEINC, Team Leader
Site Coordinator:	Mr. Louis Derose	Lafarge North America – Joppa Plant
Test Dates:	August 25-26, 2009	
Project Number:	2009-11029	
State Observer:		None on Site

- Senior Project Manager works directly with the site coordinator and the facility's operators during the testing to coordinate the testing. They are also responsible for operating and monitoring the instrumental test methods within the mobile test laboratory.
- Project Manager manages and supervises the wet test methods conducted at the sample location.
- Team Leader and the Environmental technicians conduct the wet test methods and provide assistance as required on the instrumental test methods.
- The Site Coordinator is the facility's representative for the test program.

The individuals listed within above account for nearly 75 years of accumulative experience in the stack testing industry. Their experience expands nearly every state in the United States. It also includes most source categories such as waste incinerators, hazardous waste incinerators, Trash incinerators, Medical waste incinerators, cement kilns, paper mills, steel mills, combined cycle power plants, simple cycle power plants, coal fired power plants, natural gas compressor stations, diesel engines, ethanol plants, and oil refineries.

3.3 Test Program Objectives

The test objective is to conduct PC MACT compliance testing on Kilns 1 & 2 at the Lafarge North America Facility in Grand Chain, Illinois. Compliance Testing included three one-hour test runs conducted on actual product and while the units operated at their maximum capacity. The production data is included in Appendix

The average emission rate of three test runs will be used to demonstrate compliance with the permitted PM emission limit of 0.30 lb of Particulate / ton of feed. The PM test parameter is expressed as filterable particulate.

TABLE 3.3-1 Facility Compliance Test Results and Permitted Limits

LOCATION	PARAMETER	Run 1	Run 2	Run 3	RESULT	PERMITTED LIMIT
KILN 1	Total Filterable Particulate	0.194	0.143	0.122	0.153	0.30 lb/Ton of feed -
KILN 2	Total Filterable Particulate	0.203	0.172	0.175	0.183	0.30 lb/Ton of Feed

The compliance test program is to measure exhaust gas concentrations of total particulate utilizing manual methods, to demonstrate compliance with the issued permit and federal requirements. RMCEINC uses procedures that conform to the requirements of CFR; Title 40 Part 51, 60 and 63, and EPA Test Methods 1, 2, 3, 4, and 5 (CFR; Title 40 Part 60, Appendix A).

The equipment and procedures RMCEINC used in meeting these requirements are described below. The completed EPA Method 1 data sheets for Kilns 1 & 2 are included as **Appendix C.** The corresponding test data is presented in **Appendix A, B & C.**

Cyclonic flow within each Stack was verified as defined by 40CFR60 and that data is in **Appendix D**.

PROCESS TESTING SCENARIOS AND ANOMOLIES:

There were no anomalies noted during the field test runs for any of the pollutants.

4.0 REFERENCE TEST EQUIPMENT AND PROCEDURES

4.1 Instrumentation and Equipment Procedures

4.1.1 Compliance Testing - Volumetric Flow Rates

RMCEINC determines the number and location of the traverse points for volumetric flow rate measurement according to the procedures outlined in EPA Method 1. When determining the location and number of sample points, RMCEInc takes into account the number of sample ports, duct configuration, and location of upstream and downstream flow disturbances.

The flue gas velocity and volumetric flow rate are determined according to the procedures of EPA Method 2. A Type S Pitot tube with a Type K thermocouple (EPA Method 5 Sample Probe) is used to measure velocity pressure and stack gas temperature at each sample point. Each Pitot tube conformed to the geometric specifications of EPA Method 2 and was assigned a coefficient of 0.84. An umbilical cord connected the Pitot tube to the meter box inclined manometer or digital differential pressure meter and digital temperature readout.

RMCEInc determines the flue gas composition and molecular weight using EPA Methods 3 and 4 procedures.

4.1.2 Filterable Particulate Emissions Testing

Sample Collection. Samples are withdrawn isokinetically from the source using a modified EPA Method 5 sampling train. The sampling train consists of a glass nozzle, a heated glass or Teflon probe with a Type S Pitot tube attached, a heated glass fiber filter, four chilled impingers, and a metering console. The first and second impingers each contain 100 ml of DI Water, the third remains empty and the fourth contains preweighed silica gel. Each run is a minimum of one hour in duration with a minimum sample volume of 30 dry standard cubic feet. Each of the 12 points are sampled for 5 minutes, resulting in net run times of 60 minutes.

Sample Recovery. The reagents are returned to the original bottles, weighed, the weights recorded on the labels, and the liquid levels marked. The silica gel is returned to the original container, weighed, and the weight recorded on the label. The volume of water vapor condensed in the impingers and the volume of water vapor collected in the silica gel is summed and entered into moisture content calculations.

The nozzle, probe, front half of the filter are rinsed and brushed with 100 ml of acetone into container 2. The weighed filter is put back in to the glass petri dish (container 1) and sealed.

Sample Analyses. The amount of condensate collected in each train is used to determine the moisture content of the flue gas. The filter and front half rinses (containers 1 & 2) are analyzed for total particulate by the methods outlined in EPA Method 5.

4.2 Test Methods

Test methods to be used during the test project are described within the sections 4.1.1 – 4.1.2 above. In order to supplement this information further **FIGURE 4.2-1** has been added to help summarize this EPA method.

FIGURE 4.2-1 Sample Train Diagram -

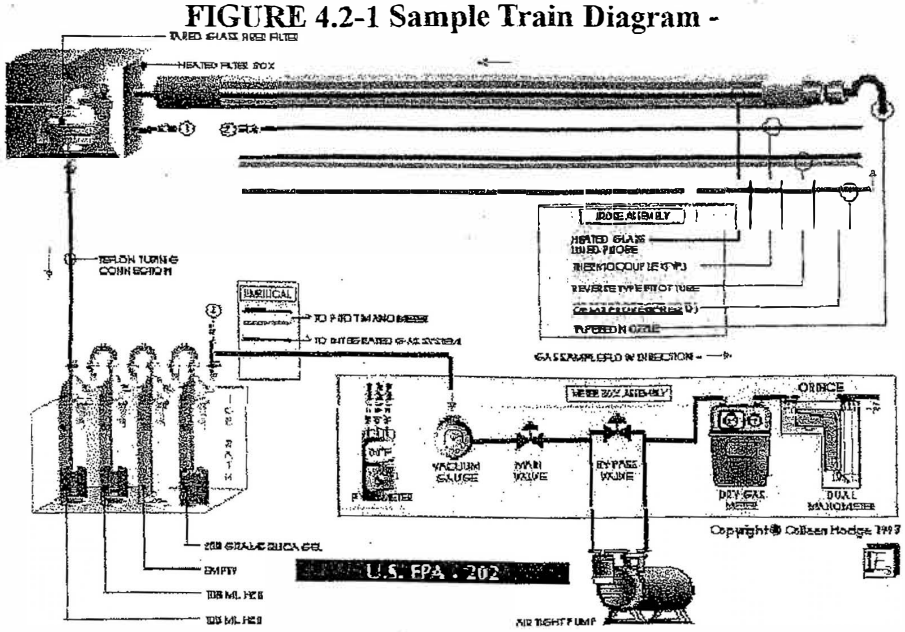

4.3 Analytical Methods

Analytical methods to be used during the test project are described within the sections 4.1.1 – 4.1.2 above.

4.4 Sample Data

All data collected during the respective testing of the processes are included in **Appendix B & C** to this report. All process data to substantiate the production rates, temperature, fuel flows, etc. are contained in **Appendix E**.

5.0 QUALITY ASSURANCE AND EQUIPMENT CALIBRATION

RMCEINC follows the calibration and quality assurance procedures of EPA Methods 1, 2, 3, 4 and 5 throughout the test program. The maintenance for our meterboxes, probes, analyzers and a majority of our other test equipment is performed off site by either Clean Air Engineering or Millenium Instruments. These companies ensure that our equipment is operating correctly and within the specification of the respective methods. All equipment is calibrated in accordance with the EPA Methods and guidelines.

A copy of the meter box calibrations, pitot tube inspections, calibration gas certificates of analysis and the analyzer quality assurance checks are included in **Appendix D**.

RMCEINC uses computers throughout the test program. Spreadsheets and software programs are checked in our office for accuracy. Software used by RMCEINC is structured to eliminate human errors in data entry where possible by automating the process. When possible RMCEINC, inputs field data directly into the DAS system and eliminates the hand written field data sheets. These systems provide an accurate measurement of the raw test data and are not used to modify or change test data in any manner. Equations used in these systems are taken directly

from the CFR when possible and notations are provided if originated from an alternate source or customized in any manner.

6.0 SOURCE TEST REPORT

6.1 Report Format

This final report, which follows the format defined within the protocol approved by the State of Illinois. All field data, calculations, and QA documentation will be included within the appendices of this report.

6.2 Data Reduction Procedures/ Methods

In 1994 most of the data reduction (validation) was completed by hand and thus a written procedure was required in order to ensure that the data was handled and validated properly. Although some testing companies today still utilize this old method, RMCEINC utilizes through the use of computers an automated data reduction/ validation procedure, thus eliminating the potential of errors that the old method was known. This automated system was developed in 1996 by a third party and has been continually verified each year though its use at several hundred test projects.

Figure 6.2-1 and 6.2-2 include several example calculations that will be used during the test project. The final test report will include a full set of example calculations that will use one of the actual test runs as a demonstration.

The equipment calibration and QA/QC forms are included within **Appendix D**.

FIGURE 6.2-1 Example Calculations

EPA DUST LOADING FORMULAS

(1) ABSOLUTE FLUE PRESSURE (in. Hg)

$$P_s = (\pm P_f \div 13.6) + P_b$$

(2) WATER VAPOR VOLUME IN METERED GAS CORRECTED TO STANDARD CONDITIONS (scf)

$$V_{wc} = .04707 \times V_l \qquad V_{wsg} = .04715 \times W_{sg}$$

$$V_w = V_{wc} + V_{wsg}$$

(3) METERED GAS VOLUME CORRECTED TO STANDARD CONDITIONS (scf)

$$V_{ms} = 17.64 \times Y \times V_m \; \frac{P_b + (\Delta H/13.6)}{T_m}$$

(4) PERCENT MOISTURE IN FLUE GAS

$$B_{ws} = \frac{V_w}{(V_{ms} + V_w)} \qquad \%M = B_{ws} \times 100$$

(5) AVERAGE RESULTS OF FLUE GAS ANALYSIS

$$\%N_2 \text{ dry} = 100 - (\%CO_2 + \%O_2 + \%CO)$$

(6) APPROXIMATE MOLECULAR WEIGHT OF FLUE GAS (WET BASIS) (lb/lb-mole)

$$M_s = (18 \times B_{ws}) + \left((.440\,(\%CO_2) + .320\,(\%O_2) + .280\,(\%N_2 + \%CO)\right) \times (1 - B_{ws})$$

(7) GAS VELOCITY IN FLUE (fps)

$$V_s = 85.49 \times C_p \times (\sqrt{\Delta P}\,)_{avg.} \sqrt{\frac{T_s}{P_s \times M_s}}$$

(8) FLUE GAS VOLUME AT ACTUAL CONDITIONS (acfm)

$$V_a = V_s \times A \times 60$$

(9) FLUE GAS VOLUME CORRECTED TO DRY STANDARD CONDITIONS (dscfm)

$$Q_{sd} = \frac{T_{std}}{29.92} \times \frac{P_s}{T_s} \times V_a \times (1 - B_{ws}) \times 60$$

(10) TOTAL FLUE GAS VOLUME SAMPLED AT ACTUAL CONDITIONS (acf)

$$V_t = \left[V_m \times Y \times \frac{T_s}{T_m} \times \left(\frac{P_b + (\Delta H/13.6)}{P_s}\right)\right] + \left(0.00267 \times V_{lc} \times \frac{T_s}{P_s}\right)$$

030281

Form AQD-(T-S)-IN
Page 2 of 3

FIGURE 6.2-1 Example Calculations (Continued)

NOMENCLATURE

acf = actual cubic feet
acfm = actual cubic feet per minute
A = effective area of flue in square feet
acm = actual cubic meters
acmm = actual cubic meters per minute
A_n = inside area of sampling nozzle in square feet
B_{ws} = water vapor in gas stream, proportion by volume
%C = percent carbon by weight, dry basis
%CO = percent carbon monoxide by volume, dry basis
$\%CO_2$ = percent carbon dioxide by volume, dry basis
C_p = pitot tube coefficient
D_I = dust loading per heat input in pounds (grams) per million Btu (calories) per Fr constant
D_I' = dust loading per heat input in pounds (grams) per million Btu (calories) per Fr calculated
dscf = dry standard cubic feet
dscfh = dry standard cubic feet per hour
dscm = dry standard cubic meters
dscmh = dry standard cubic meters per hour
fps = feet per second
F_r = ratio factor of dry flue gas volume to heat value of combusted fuel in dry standard cubic feet (meters) per million Btu (calories)
gms = grams
gm-mole = gram-mole
grs = grains
ΔH = orifice pressure drop in inches water, average
%H = percent hydrogen by weight, dry basis
H_c = heat of combustion in Btu per pound, dry basis
hr = hour
%I = percent isokinetic
in. Hg = inches mercury
lbs = pounds
lb-mole = pound-mole
%M = percent moisture by volume
mmBtu = million Btu
mmcal = million calories
mm Hg = millimeters mercury
mps = meters per second
M_s = molecular weight in pound (gram) per pound (gram) mole (wet basis)
%N = percent nitrogen by weight, dry basis
$\%N_2$ = percent nitrogen by difference, dry basis
%O = percent oxygen by difference, dry basis
$\%O_2$ = percent oxygen by volume, dry basis
P_b = barometric pressure in inches mercury
P_{std} = standard absolute pressure (29.92 in Hg)
P_s = absolute pressure in flue in inches (millimeters) mercury
P_f = static pressure in flue in inches water, average
$\sqrt{\Delta P}$ = square root of velocity head in inches water, average
%S = percent sulfur by weight, dry basis
scf = standard cubic feet
scm = standard cubic meters
T_{std} = absolute temperature of air in degrees Rankine at standard conditions (528 degrees)
T_s = absolute temperature of flue gas in degrees Rankine, average
T_m = absolute temperature at meter in degrees Rankine, average
V_s = velocity of flue gas in feet (meters) per second
V_l = volume of condensate through the impingers in milliliters
V_{lc} = volume of liquid collected in condenser in milliliters plus weight of liquid absorbed in silica gel in grams indicated as milliliters
V_m = volume of metered gas measured at meter conditions in cubic feet
V_{ms} = volume of metered gas corrected to dry standard conditions in cubic feet (meters)
V_o = volume of flue gas at actual conditions in cubic feet (meters) per minute
Q_{sd} = volume of flue gas corrected to dry standard conditions in cubic feet (meters) per hour
V_t = total volume of flue gas sampled at actual conditions in cubic feet (meters)
V_w = volume of water vapor in metered gas corrected to standard conditions in cubic feet (meters)
V_{wc} = volume of water condensed in impingers corrected to standard conditions
V_{wsg} = volume of water collected in silica gel corrected to standard conditions
W_a = total weight of dust collected per unit volume in grains (grams) per actual cubic feet (meters)
W_d = total weight of dust collected per unit volume in pounds (grams) per dry standard cubic feet (meters)
W_g = total weight of dust collected in grams
W_h = total weight of dust collected per unit volume in pounds (grams) per hour, dry basis
W_p = total weight of dust collected in pounds
W_s = total weight of dust collected per unit volume in grains (grams) per dry standard cubic feet (meters)
W_{sg} = impinger silica gel weight gain in grams
Y = metered gas volume correction factor
Θ = total elapsed sampling time in minutes

030281

Form AQD-(T-S)-1N
Page 3 of 3

APPENDIX A. REFERENCE DATA SUMMARY

METHOD 5 - DETERMINATION OF PARTICULATE EMISSIONS - RESULTS

Plant Name	LaFarge	Date	8/26/2009
Sampling Location	Kiln 2 Outlet	Project #	2009-11029
Operator	GC/AM	Stack Type	Circular

Historical Data						
Run Number		K2-M5-1	K2-M5-2	K2-M5-3	Average	
Run Start Time		9:25	10:40	11:55		hh:mm
Run Stop Time		10:30	11:45	13:00		hh:mm
Meter Calibration Factor	(Y)	0.983	0.983	0.983		
Pitot Tube Coefficient	(C_p)	0.840	0.840	0.840		
Actual Nozzle Diameter	(D_{ns})	0.265	0.265	0.265		in
Stack Test Data						
Initial Meter Volume	$(V_m)_i$	626.500	679.115	733.651		ft^3
Final Meter Volume	$(V_m)_f$	677.748	733.106	787.958		ft^3
Total Meter Volume	(V_m)	51.248	53.991	54.307	53.182	ft^3
Total Sampling Time	(Θ)	60.0	60.0	60.0	60.0	min
Average Meter Temperature	$(t_m)_{avg}$	84.3	96.4	99.8	93.5	°F
Average Stack Temperature	$(t_s)_{avg}$	346.3	347.6	347.3	347.1	°F
Barometric Pressure	(P_b)	30.37	30.37	30.37	30.37	in Hg
Stack Static Pressure	(P_{static})	-1.20	-1.20	-1.20	-1.20	in H_2O
Absolute Stack Pressure	(P_s)	30.37	30.37	30.37	30.37	in Hg
Average Orifice Pressure Drop	$(\Delta H)_{avg}$	2.55	2.50	2.49	2.51	in H_2O
Absolute Meter Pressure	(P_m)	30.56	30.55	30.55	30.55	in Hg
Avg Square Root Pitot Pressure	$(\Delta p^{1/2})_{avg}$	0.93	0.93	0.93	0.93	$(in\ H_2O)^{1/2}$
Moisture Content Data						
Impingers 1-3 Water Volume Gain	(V_n)	200.0	236.0	210.0	215.3	ml
Impinger 4 Silica Gel Weight Gain	(W_n)	14.5	13.6	12.2	13.4	g
Total Water Volume Collected	(V_{lc})	214.5	249.6	222.2	228.8	ml
Standard Water Vapor Volume	$(V_w)_{std}$	10.098	11.750	10.460	10.769	scf
Standard Meter Volume	$(V_m)_{std}$	49.910	51.433	51.418	50.920	dscf
Calculated Stack Moisture	$(B_{ws(calc)})$	16.8	18.6	16.9	17.4	%
Saturated Stack Moisture	$(B_{ws(sat)})$	100.00	100.0	100.0	100.0	%
Reported Stack Moisture Content	(B_{ws})	16.8	18.6	16.9	17.4	%
Gas Analysis Data						
Carbon Dioxide Percentage	$(\%CO_2)$	18.5	17.5	18.0	18.0	%
Oxygen Percentage	$(\%O_2)$	8.4	9.2	9.1	8.9	%
Carbon Monoxide Percentage	(%CO)	0.0	0.0	0.0	0.0	%
Nitrogen Percentage	$(\%N_2)$	73.1	73.3	72.9	73.1	%
Dry Gas Molecular Weight	(M_d)	31.30	31.17	31.24	31.24	lb/lb-mole
Wet Stack Gas Molecular Weight	(M_s)	29.06	28.72	29.01	28.93	lb/lb-mole
Calculated Fuel Factor	(F_o)	0.676	0.669	0.656	0.667	
Fuel F-Factor	(F_d)	8710	8710	8710	8710	dscf/mmBtu
Percent Excess Air	(%EA)	77.1	90.6	89.7	85.8	%
Volumetric Flow Rate Data						
Average Stack Gas Velocity	(v_s)	63.96	64.20	63.65	63.94	ft/sec
Stack Cross-Sectional Area	(A_s)	56.75	56.75	56.75		ft^2
Actual Stack Flow Rate	(Q_{aw})	217765	218590	216722	217692	acfm
Wet Standard Stack Flow Rate	(Q_{sw})	8684	8704	8633	8674	wkscfh
Dry Standard Stack Flow Rate	(Q_{sd})	120385	118087	119561	119344	dscfm
Percent of Isokinetic Rate	(I)	102.4	107.5	106.2	105.4	%
Emission Rate Data						
Mass of Particulate - Front Half	(m_f)	10.8	16.7	21.1	16.2	mg
Mass of Particulate - Back Half	(m_e')	73.1	57.6	58.1	62.9	mg
Mass due to Acetone Blank	(W_a)	0.0	0.0	0.0	0.0	mg
Total Mass of Particulates	(m_n)	83.9	74.3	79.2	79.1	mg
Stack Particulate Concentration	(c_s)	0.002	0.001	0.002	0.002	g/dscf
	(c_s)	0.026	0.022	0.024	0.024	gr/dscf
Particulate Emission Rate	(E)	12.14	10.24	11.05	11.14	kg/hr
	(E)	26.8	22.6	24.4	24.6	lbs/hr
	(E)	0.0540	0.0496	0.0524	0.0520	lbs/mmBtu
Particulate Emission Rate		0.203	0.172	0.175	0.183	lb/ton feed
Process feed Rate		131.94	131.38	138.84	134.05	ton of raw feed
Meterbox Calibration Check						
Yqa		1.0132	0.9864	0.9868	0.9955	+/- 5%
+ 5% of y					1.0322	
- 5% of y					0.9339	

METHOD 5 - DETERMINATION OF PARTICULATE EMISSIONS - RESULTS

Plant Name	LaFarge	Date	8/25/2009
Sampling Location	Outlet KILN1	Project #	2009-11026
Operator	GC/AM	Stack Type	Circular

Historical Data						
Run Number		K1-M5-1	K1-M5-2	K1-M5-3	Average	
Run Start Time		3:08	4:18	5:35		hh:mm
Run Stop Time		4:12	5:25	6:40		hh:mm
Meter Calibration Factor	(Y)	0.951	0.951	0.951		
Pitot Tube Coefficient	(C_p)	0.840	0.840	0.840		
Actual Nozzle Diameter	(D_{ne})	0.309	0.309	0.309		in
Stack Test Data						
Initial Meter Volume	(V_{mi})	397.475	441.501	486.802		ft^3
Final Meter Volume	(V_{mf})	441.216	486.348	532.018		ft^3
Total Meter Volume	(V_m)	43.741	44.847	45.216	44.601	ft^3
Total Sampling Time	(Θ)	60.0	60.0	60.0	60.0	min
Average Meter Temperature	(t_m)$_{avg}$	93.0	95.5	96.7	95.1	°F
Average Stack Temperature	(t_s)$_{avg}$	313.4	313.0	314.5	313.6	°F
Barometric Pressure	(P_b)	30.25	30.25	30.25	30.25	in Hg
Stack Static Pressure	(P_{static})	-0.20	-0.18	-0.19	-0.19	in H_2O
Absolute Stack Pressure	(P_s)	30.24	30.24	30.24	30.24	in Hg
Average Orifice Pressure Drop	(ΔH)$_{avg}$	1.62	1.55	1.63	1.60	in H_2O
Absolute Meter Pressure	(P_m)	30.37	30.36	30.37	30.37	in Hg
Avg Square Root Pitot Pressure	($\Delta p^{1/2}$)$_{avg}$	0.54	0.53	0.54	0.54	(in H_2O)$^{1/2}$
Moisture Content Data						
Impingers 1-3 Water Volume Gain	(V_n)	104.0	210.0	175.0	163.0	ml
Impinger 4 Silica Gel Weight Gain	(W_n)	4.6	9.2	14.1	9.3	g
Total Water Volume Collected	(V_c)	108.6	219.2	189.1	172.3	ml
Standard Water Vapor Volume	(V_w)$_{std}$	5.112	10.319	8.902	8.111	scf
Standard Meter Volume	(V_m)$_{std}$	40.316	41.140	41.396	40.950	dscf
Calculated Stack Moisture	($B_{ws(calc)}$)	11.3	20.1	17.7	16.3	%
Saturated Stack Moisture	($B_{ws(sat)}$)	100.00	100.0	100.0	100.0	%
Reported Stack Moisture Content	(B_{ws})	11.3	20.1	17.7	16.3	%
Gas Analysis Data						
Carbon Dioxide Percentage	(%CO_2)	17.8	18.1	18.2	18.0	%
Oxygen Percentage	(%O_2)	8.2	7.9	8.1	8.1	%
Carbon Monoxide Percentage	(%CO)	0.0	0.0	0.0	0.0	%
Nitrogen Percentage	(%N_2)	74.0	74.0	73.7	73.9	%
Dry Gas Molecular Weight	(M_d)	31.18	31.21	31.24	31.21	lb/lb-mole
Wet Stack Gas Molecular Weight	(M_s)	29.69	28.56	28.89	29.05	lb/lb-mole
Calculated Fuel Factor	(F_o)	0.713	0.718	0.703	0.712	
Fuel F-Factor	(F_c)	8710	8710	8710	8710	dscf/mmBtu
Percent Excess Air	(%EA)	72.3	67.9	71.3	70.5	%
Volumetric Flow Rate Data						
Average Stack Gas Velocity	(v_s)	35.94	36.31	36.34	36.20	ft/sec
Stack Cross-Sectional Area	(A_s)	63.62	63.62	63.62		ft^2
Actual Stack Flow Rate	(Q_{sw})	137171	138593	138710	138158	acfm
Wet Standard Stack Flow Rate	(Q_{sw})	5678	5740	5734	5717	wkscfh
Dry Standard Stack Flow Rate	(Q_{sd})	83982	76485	78649	79705	dscfm
Percent of Isokinetic Rate	(I)	97.7	109.5	107.2	104.8	%
Emission Rate Data						
Mass of Particulate - Front Half	(m_f)	60.3	51.2	43.2	51.6	mg
Mass of Particulate - Back Half	(m_e')	5.3	5.8	3.2	4.8	mg
Mass due to Acetone Blank	(W_a)	0.0	0.0	0.0	0.0	mg
Total Mass of Particulates	(m_n)	65.6	57.0	46.4	56.3	mg
Stack Particulate Concentration	(c_s)	0.002	0.001	0.001	0.001	g/dscf
	(c_s)	0.025	0.021	0.017	0.021	gr/dscf
Particulate Emission Rate	(E)	8.20	6.36	5.29	6.62	kg/hr
	(E)	18.1	14.0	11.7	14.6	lbs/hr
	(E)	0.0514	0.0428	0.0351	0.0431	lbs/mmbtu
Particulate Emission Rate		0.194	0.143	0.122	0.153	lb/ton feed
Process feed Rate		93.31	97.85	95.29	95.48	ton of raw feed
Meterbox Calibration Check						
Yqa		1.0117	0.9726	0.9903	0.9915	+/- 5%
+ 5% of y					0.9986	
- 5% of y					0.9035	

APPENDIX B. ISOKINETIC TEST DATA

EPA METHOD 1 DATA
EPA METHOD 3 DATA
EPA METHOD 4 DATA
EPA METHOD 5 DATA

METHOD 1 - SAMPLE AND VELOCITY TRAVERSES FOR CIRCULAR SOURCES

Plant Name	LaFarge	Date	8/25/2009
Sampling Location	Outlet KILN1	Project #	2009-11026
Operator	GC/AM	# of Ports Available	4
Stack Type	Circular	# of Ports Used	2
Stack Size	Large	Port Inside Diameter	18

Circular Stack or Duct Diameter			
Distance to Far Wall of Stack	(L_{fw})	126.00	in
Distance to Near Wall of Stack	(L_{nw})	18.00	in
(=Lfw - Lnw) Diameter of Stack	(D)	108.00	in
(=3.14(D/2/Cunits)2) Area of Stack	(A_s)	63.62	ft^2

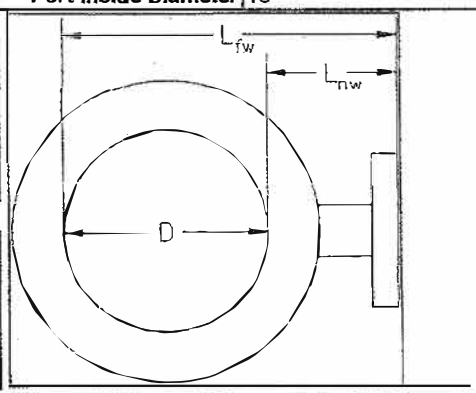

Distance from Port to Disturbances			
Distance Upstream	(B)	1140.00	in
(=B/D) Diameters Upstream	(B_D)	10.56	diameters
Distance Downstream	(A)	360.00	in
(=A/D) Diameters Downstream	(A_D)	3.33	diameters

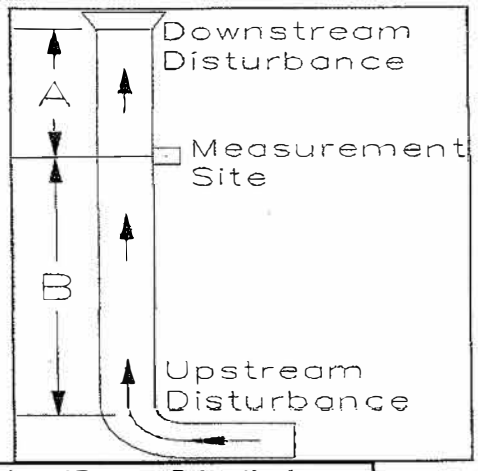

Number of Traverse Points Required			
Diameters to Flow Disturbance		Minimum Number of[1] Traverse Points	
Up Stream	Down Stream	Particulate Points	Velocity Points
2.00-4.99	0.50-1.24	24	16
5.00-5.99	1.25-1.49	20	16
6.00-6.99	1.50-1.74	16	12
7.00-7.99	1.75-1.99	12	12
>= 8.00	>=2.00	8 or 12[2]	8 or 12[2]
Upstream Spec		12	12
Downstream Spec		12	12
Traverse Pts Required		12	12

[1] Check Minimum Number of Points for the Upstream and Downstream conditions, then use the largest.
[2] 8 for Circular Stacks 12 to 24 inches
12 for Circular Stacks over 24 inches

Number of Traverse Points Used			
2	Ports by	6	Across
12	Pts Used	12	Required
☑	Particulate	☐	Velocity

Location of Traverse Points in Circular Stacks						
Traverse Point Number	(Fraction of Stack Diameter from Inside Wall to Traverse Point) Number of Traverse Points on a Diameter					
	2	4	6	8	10	12
1	.146	.067	.044	.032	.026	.021
2	.854	.250	.146	.105	.082	.067
3		.750	.296	.194	.146	.118
4		.933	.704	.323	.226	.177
5			.854	.677	.342	.250
6			.956	.806	.658	.356
7				.895	.774	.644
8				.968	.854	.750
9					.918	.823
10					.974	.882
11						.933
12						.979

Traverse Point Locations			
Traverse Point Number	Fraction of Stack Diameter	Distance from Inside Wall	Distance Including Nipple Length
		in	in
1	0.044	4 6/8	22 6/8
2	0.146	15 6/8	33 6/8
3	0.296	32	50
4	0.704	76	94
5	0.854	92 2/8	110 2/8
6	0.956	103 2/8	121 2/8
7			
8			
9			
10			
11			
12			

METHOD 3 - GAS ANALYSIS FOR THE DETERMINATION OF DRY MOLECULAR WEIGHT

Plant Name	LaFarge			Date	8/25/2009
Sampling Location	Outlet KILN1			Project #	2009-11026
Operator	GC/AM			# of Ports Used	2
Fuel Type	N/A	Minimum Fuel Factor	1.600	Maximum Fuel Factor	1.800
Orsat Leak Check	☑	PreTest	☑	PostTest	Orsat Identification

Gas Analysis Data

Run Number	K1-M5-1			Run Start Time	3:08		Run Stop Time	4:12
Sample Analysis Time	Carbon Dioxide Volume (V_{CO2})	Oxygen Volume (V_{O2})	Carbon Monoxide Volume (V_{CO})	Carbon Dioxide Conc. ($\%CO_2$)	Oxygen Conc. ($\%O_2$)	Carbon Monoxide Conc. (%CO)	Nitrogen Conc. ($\%N_2$)	Dry Molecular Weight (M_d)	Molecular Weight Deviation (ΔM_d)
hh:mm	ml	ml	ml	percent	percent	percent	percent	lb/lb-mole	lb/lb-mole
Fyrite	17.8	26.0		17.8	8.2	0.0	74.0	31.18	0.00
	17.8	26.0		17.8	8.2	0.0	74.0	31.18	0.00
	17.8	26.0		17.8	8.2	0.0	74.0	31.18	0.00
Results			Averages	17.8	8.2	0.0	74.0	31.18	
Average Calculated Fuel Factor			$(F_o)_{avg}$	0.713		Molecular Wt Deviation < 0.3?			☑
Average Excess Air			$(\%EA)_{avg}$	72.3	percent	Fuel Factor in Handbook Range?			☑

Gas Analysis Data

Run Number	K1-M5-2			Run Start Time	4:18		Run Stop Time	5:25
Sample Analysis Time	Carbon Dioxide Volume (V_{CO2})	Oxygen Volume (V_{O2})	Carbon Monoxide Volume (V_{CO})	Carbon Dioxide Conc. ($\%CO_2$)	Oxygen Conc. ($\%O_2$)	Carbon Monoxide Conc. (%CO)	Nitrogen Conc. ($\%N_2$)	Dry Molecular Weight (M_d)	Molecular Weight Deviation (ΔM_d)
hh:mm	ml	ml	ml	percent	percent	percent	percent	lb/lb-mole	lb/lb-mole
Fyrite	18.1	26.0		18.1	7.9	0.0	74.0	31.21	0.00
	18.1	26.0		18.1	7.9	0.0	74.0	31.21	0.00
	18.1	26.0		18.1	7.9	0.0	74.0	31.21	0.00
Results			Averages	18.1	7.9	0.0	74.0	31.21	
Average Calculated Fuel Factor			$(F_o)_{avg}$	0.718		Molecular Wt Deviation < 0.3?			☑
Average Excess Air			$(\%EA)_{avg}$	67.9	percent	Fuel Factor in Handbook Range?			☑

Gas Analysis Data

Run Number	K1-M5-3			Run Start Time	5:35		Run Stop Time	6:40
Sample Analysis Time	Carbon Dioxide Volume (V_{CO2})	Oxygen Volume (V_{O2})	Carbon Monoxide Volume (V_{CO})	Carbon Dioxide Conc. ($\%CO_2$)	Oxygen Conc. ($\%O_2$)	Carbon Monoxide Conc. (%CO)	Nitrogen Conc. ($\%N_2$)	Dry Molecular Weight (M_d)	Molecular Weight Deviation (ΔM_d)
hh:mm	ml	ml	ml	percent	percent	percent	percent	lb/lb-mole	lb/lb-mole
Fyrite	18.2	26.3		18.2	8.1	0.0	73.7	31.24	0.00
	18.2	26.3		18.2	8.1	0.0	73.7	31.24	0.00
	18.2	26.3		18.2	8.1	0.0	73.7	31.24	0.00
Results			Averages	18.2	8.1	0.0	73.7	31.24	
Average Calculated Fuel Factor			$(F_o)_{avg}$	0.703		Molecular Wt Deviation < 0.3?			☑
Average Excess Air			$(\%EA)_{avg}$	71.3	percent	Fuel Factor in Handbook Range?			☑

Fuel Factor Fo

Fuel Type	Minimum	Maximum
Coal, Anthracite	1.016	1.130
Coal, Lignite	1.016	1.130
Coal, Bituminous	1.083	1.230
Oil, Distillate	1.260	1.413
Oil, Residual	1.210	1.370
Gas, Natural	1.600	1.836
Gas, Propane	1.434	1.586
Gas, Butane	1.405	1.553
Wood	1.000	1.120
Wood Bark	1.003	1.130

Formulas Used

$\%CO_2 = V_{CO2}$

$\%O_2 = V_{O2} - V_{CO2}$

$\%CO = V_{CO} - V_{O2}$

$\%N_2 = 100 - \%CO_2 - \%O_2 - \%CO$

$M_d = .44(\%CO_2) + .32(\%O_2) + .28(\%N_2 + \%CO)$

$\Delta M_d = M_d - M_{davg}$

$F_o = (20.9 - \%O_2 - .5\%CO)/(\%CO_2 + \%CO)$

$\%EA = 100(\%O_2 - .5\%CO)/(.264\%NO_2 - (\%O_2 - .5\%CO))$

METHOD 4 - DETERMINATION OF MOISTURE CONTENT IN STACK GASES

Plant Name	LaFarge			Date	8/25/2009
Sampling Location	Outlet KILN1			Project #	2009-11026
Operator	GC/AM			# of Ports Used	2
Stack Type	Circular			Meter Box Number	002
Train Leak Check	☑ PreTest	☑ PostTest		Meter Cal Factor (Y)	0.951

Moisture Content Data							
Run Number	K1-M5-1		Run Start Time	3:08		Run Stop Time	4:12
Total Meter Volume	(V_m)	43.741	dcf	Barometric Press.	(P_b)	30.25	in Hg
Avg Meter Temp	$(t_m)_{avg}$	93	°F	Stack Static Press.	(P_{static})	-0.20	in H_2O
Avg Stack Temp	$(t_s)_{avg}$	313	°F	Avg Orifice Press.	$(\Delta H)_{avg}$	1.62	in H_2O
		Impinger 1	Impinger 2	Impinger 3	Impinger 4	Impinger 5	Impinger 6	Impinger 7
		ml	ml	ml	g	ml	ml	ml
Contents		DI	DI		Sil Gel			
Final Value	$(V_f),(W_f)$	304.00			154.60			
Initial Value	$(V_i),(W_i)$	200.00			150.00			
Net Value	$(V_n),(W_n)$	104.0			4.6			
Results								
Total Volume	(V_t)	104.00	ml	Water Vol Condensed	$(V_{wc(std)})$	4.895	scf
Total Weight	(W_t)	4.60	g	Water Vol Weighed	$(V_{wsg(std)})$	0.217	scf
Std Meter Volume	$(V_{m(std)})$	40.316	dscf	Sat. Moisture Content	$(B_{ws(svp)})$	100.0	%
Calc Moisture Content	$(B_{ws(calc)})$	11.3	%	Final Moisture Content	(B_{ws})	11.3	%

Moisture Content Data							
Run Number	K1-M5-2		Run Start Time	4:18		Run Stop Time	5:25
Total Meter Volume	(V_m)	44.847	dcf	Barometric Press.	(P_b)	30.25	in Hg
Avg Meter Temp	$(t_m)_{avg}$	96	°F	Stack Static Press.	(P_{static})	-0.18	in H_2O
Avg Stack Temp	$(t_s)_{avg}$	313	°F	Avg Orifice Press.	$(\Delta H)_{avg}$	1.55	in H_2O
		Impinger 1	Impinger 2	Impinger 3	Impinger 4	Impinger 5	Impinger 6	Impinger 7
		ml	ml	ml	g	ml	ml	ml
Contents		DI	DI		Sil Gel			
Final Value	$(V_f),(W_f)$	410.00			159.20			
Initial Value	$(V_i),(W_i)$	200.00			150.00			
Net Value	$(V_n),(W_n)$	210.0			9.2			
Results								
Total Volume	(V_t)	210.00	ml	Water Vol Condensed	$(V_{wc(std)})$	9.885	scf
Total Weight	(W_t)	9.20	g	Water Vol Weighed	$(V_{wsg(std)})$	0.434	scf
Std Meter Volume	$(V_{m(std)})$	41.140	dscf	Sat. Moisture Content	$(B_{ws(svp)})$	100.0	%
Calc Moisture Content	(B_{ws})	20.1	%	Final Moisture Content	(B_{ws})	20.1	%

Moisture Content Data							
Run Number	K1-M5-3		Run Start Time	5:35		Run Stop Time	6:40
Total Meter Volume	(V_m)	45.216	dcf	Barometric Press.	(P_b)	30.25	in Hg
Avg Meter Temp	$(t_m)_{avg}$	97	°F	Stack Static Press.	(P_{static})	-0.19	in H_2O
Avg Stack Temp	$(t_s)_{avg}$	315	°F	Avg Orifice Press.	$(\Delta H)_{avg}$	1.63	in H_2O
		Impinger 1	Impinger 2	Impinger 3	Impinger 4	Impinger 5	Impinger 6	Impinger 7
		ml	ml	ml	g	ml	ml	ml
Contents		DI	DI		Sil Gel			
Final Value	$(V_f),(W_f)$	375.00			164.10			
Initial Value	$(V_i),(W_i)$	200.00			150.00			
Net Value	$(V_n),(W_n)$	175.0			14.1			
Results								
Total Volume	(V_t)	175.00	ml	Water Vol Condensed	$(V_{wc(std)})$	8.237	scf
Total Weight	(W_t)	14.10	g	Water Vol Weighed	$(V_{wsg(std)})$	0.665	scf
Std Meter Volume	$(V_{m(std)})$	41.396	dscf	Sat. Moisture Content	$(B_{ws(svp)})$	100.0	%
Calc Moisture Content	(B_{ws})	17.7	%	Final Moisture Content	(B_{ws})	17.7	%

ISOKINETIC SAMPLING DATA

Plant Name	LaFarge	Date	8/25/2009
Sampling Location	Outlet KILN1	Project #	2009-11026
Operator	GC/AM	Run #	K1-M5-1
# of Points Across	6	# of Ports Used	2

Ideal Nozzle Diameter and IsoKinetic Factor Setup			
Pitot Tube Coefficient	(C_p)	0.840	
Avg Stack Temp	(t_s)	315	°F
Avg Gas Meter Temp	(t_m)	85	°F
DH @ 0.75 SCFM	($\Delta H@$)	1.84	in H_2O
Avg Pitot Tube Diff. Pressure	(Δp_{avg})	0.32	in H_2O
Stack Moisture Content	(B_{ws})	16.0	%
Stack Dry Molecular Weight	(M_{ds})	31.55	lb/lb-mole
Estimated Orifice Flow Rate	(Q_m)	0.750	acfm
DP to DH Isokinetic Factor	(K)	5.33	

Sampling Equipment			
Meter #	002		
Meterbox Cal. Factor	(Y)	0.951	
Nozzle #	N309		
Actual Nozzle Diameter	(D_{na})	0.3090	in
Req. Nozzle Diameter	(D_{ni})	0.3206	in
Probe # / Length		120.00	ft
Liner Material	ss		
Sample Case / Oven #			
Impinger Case #			

Pressures			
Barometric Pressure	(P_b)	30.25	in Hg
Stack Static Pressure	(P_{static})	-0.20	in H_2O
Absolute Stack Pressure	(P_s)	30.24	in Hg
Absolute Meter Pressure	(P_m)	30.39	in Hg

ΔV_m		Leak Checks			
Pre	0.001	ft^3/min	@	15	in Hg
Mid		ft^3/min	@		in Hg
Post	0.001	ft^3/min	@	10	in Hg
ΔV_m <	0.020	ft^3/min	☑	Leak Check OK?	
Pitot OK?		☑	Orsat OK?		☑

Traverse Point #	Sampling Time (Θ)	Clock Time	Dry Gas Meter Reading (V_m)	Velocity Head (Δp)	Desired Orifice ΔH (ΔH)	Actual Orifice ΔH (ΔH)	Stack Temp (t_s)	Meter Inlet Temp (t_{mi})	Meter Outlet Temp (t_{mo})	Filter Temp	Impinger Exit Temp	Pump Vacuum
	min	hh:mm:ss	ft^3	in H_2O	in H_2O	in H_2O	°F	°F	°F	°F	°F	in Hg
A-1	0.0	3:08:00	397.475	0.280	1.492	1.600	310	88	87	250	50	5.0
A-2	5.0	3:13:00	401.025	0.290	1.545	1.600	311	88	87	251	50	5.0
A-3	10.0	3:18:00	404.662	0.270	1.438	1.500	313	89	89	252	50	5.0
A-4	15.0	3:23:00	408.259	0.290	1.545	1.600	315	92	89	251	50	5.0
A-5	20.0	3:28:00	411.709	0.310	1.651	1.700	312	94	90	250	51	5.0
A-6	25.0	3:33:00	415.341	0.300	1.598	1.700	314	96	91	249	51	5.0
B-1	30.0	3:42:00	419.084	0.290	1.545	1.600	312	97	92	248	51	5.0
B-2	35.0	3:47:00	422.759	0.270	1.438	1.500	315	98	94	250	51	5.0
B-3	40.0	3:52:00	426.405	0.290	1.545	1.600	316	98	94	252	51	5.0
B-4	45.0	3:57:00	430.146	0.310	1.651	1.700	315	99	95	251	51	5.0
B-5	50.0	4:02:00	433.854	0.300	1.598	1.700	313	98	94	250	52	5.0
B-6	55.0	4:07:00	437.524	0.290	1.545	1.600	315	98	94	251	52	5.0
Last Pt	60.0	4:12:00	441.216									
Last Pt	60.0	4:12:00	441.216							Maximum Vacuum		5.0
Average Values				0.29		1.62	313	95	91	250	51	
								93				

ISOKINETIC SAMPLING DATA

Plant Name	LaFarge	Date	8/25/2009
Sampling Location	Outlet KILN1	Project #	2009-11026
Operator	GC/AM	Run #	K1-M5-2
# of Points Across	6	# of Ports Used	2

Ideal Nozzle Diameter and IsoKinetic Factor Setup			
Pitot Tube Coefficient	(C_p)	0.840	
Avg Stack Temp	(t_s)	315	°F
Avg Gas Meter Temp	(t_m)	85	°F
DH @ 0.75 SCFM	($\Delta H@$)	1.84	in H_2O
Avg Pitot Tube Diff. Pressure	(Δp_{avg})	0.32	in H_2O
Stack Moisture Content	(B_{ws})	18.0	%
Stack Dry Molecular Weight	(M_{ds})	31.18	lb/lb-mole
Estimated Orifice Flow Rate	(Q_m)	0.729	acfm
DP to DH Isokinetic Factor	(K)	5.12	

Sampling Equipment			
Meter #	002		
Meterbox Cal. Factor	(Y)	0.951	
Nozzle #	N309		
Actual Nozzle Diameter	(D_{na})	0.3090	in
Req. Nozzle Diameter	(D_{nl})	0.3183	in
Probe # / Length		120.00	ft
Liner Material	ss		
Sample Case / Oven #			
Impinger Case #			

Pressures			
Barometric Pressure	(P_b)	30.25	in Hg
Stack Static Pressure	(P_{static})	-0.18	in H_2O
Absolute Stack Pressure	(P_s)	30.24	in Hg
Absolute Meter Pressure	(P_m)	30.39	in Hg

ΔV_m			Leak Checks		
Pre	0.001	ft^3/min	@	15	in Hg
Mid		ft^3/min	@		in Hg
Post	0.002	ft^3/min	@	10	in Hg
ΔV_m <	0.020	ft^3/min	☑	Leak Check OK?	
Pitot OK?		☑	Orsat OK?		☑

Traverse Point #	Sampling Time (Θ)	Clock Time	Dry Gas Meter Reading (V_m)	Velocity Head (Δp)	Desired Orifice ΔH (ΔH)	Actual Orifice ΔH (ΔH)	Stack Temp (t_s)	Meter Inlet Temp (t_{mi})	Meter Outlet Temp (t_{mo})	Filter Temp	Impinger Exit Temp	Pump Vacuum
	min	hh:mm:ss	ft^3	in H_2O	in H_2O	in H_2O	°F	°F	°F	°F	°F	in Hg
A-1	0.0	4:18:00	441.501	0.280	1.433	1.500	311	94	94	247	51	6.0
A-2	5.0	4:23:00	445.198	0.270	1.382	1.500	310	95	94	248	51	6.0
A-3	10.0	4:28:00	448.845	0.300	1.535	1.600	313	95	94	249	51	6.0
A-4	15.0	4:33:00	452.684	0.310	1.586	1.700	310	95	94	250	51	6.0
A-5	20.0	4:38:00	456.354	0.280	1.433	1.500	314	95	94	250	51	6.0
A-6	25.0	4:43:00	460.213	0.290	1.484	1.600	315	96	94	251	51	6.0
B-1	30.0	4:55:00	464.025	0.270	1.382	1.500	315	97	94	250	52	6.0
B-2	35.0	5:00:00	467.861	0.280	1.433	1.500	313	98	94	251	52	6.0
B-3	40.0	5:05:00	471.583	0.310	1.586	1.700	312	98	95	250	52	6.0
B-4	45.0	5:10:00	475.235	0.300	1.535	1.600	317	99	95	249	52	6.0
B-5	50.0	5:15:00	478.964	0.280	1.433	1.500	314	99	95	248	52	6.0
B-6	55.0	5:20:00	482.742	0.260	1.330	1.400	312	98	96	249	53	6.0
Last Pt	60.0	5:25:00	486.348									
Final Values	60.0	5:25:00	486.348							Maximum Vacuum		6.0
Average Values				0.29		1.55	313	97	94	249	52	
								96				

ISOKINETIC SAMPLING DATA

Plant Name	LaFarge	Date	8/25/2009
Sampling Location	Outlet KILN1	Project #	2009-11026
Operator	GC/AM	Run #	K1-M5-3
# of Points Across	6	# of Ports Used	2

Ideal Nozzle Diameter and IsoKinetic Factor Setup			
Pitot Tube Coefficient	(C_p)	0.840	
Avg Stack Temp	(t_s)	315	°F
Avg Gas Meter Temp	(t_m)	95	°F
DH @ 0.75 SCFM	($\Delta H@$)	1.84	in H_2O
Avg Pitot Tube Diff. Pressure	(Δp_{avg})	0.32	in H_2O
Stack Moisture Content	(B_{ws})	18.0	%
Stack Dry Molecular Weight	(M_{ds})	31.21	lb/lb-mole
Estimated Orifice Flow Rate	(Q_m)	0.747	acfm
DP to DH Isokinetic Factor	(K)	5.21	

Sampling Equipment			
Meter #	002		
Meterbox Cal. Factor	(Y)	0.951	
Nozzle #	N309		
Actual Nozzle Diameter	(D_{na})	0.3090	in
Req. Nozzle Diameter	(D_{ni})	0.3195	in
Probe # / Length		120.00	ft
Liner Material	ss		
Sample Case / Oven #			
Impinger Case #			

Pressures			
Barometric Pressure	(P_b)	30.25	in Hg
Stack Static Pressure	(P_{static})	-0.19	in H_2O
Absolute Stack Pressure	(P_s)	30.24	in Hg
Absolute Meter Pressure	(P_m)	30.39	in Hg

ΔV_m		Leak Checks			
Pre	0.001	ft^3/min	@	15	in Hg
Mid		ft^3/min	@		in Hg
Post	0.001	ft^3/min	@	10	in Hg
ΔV_m <	0.020	ft^3/min	☑	Leak Check OK?	
Pitot OK?		☑	Orsat OK?		☑

Traverse Point #	Sampling Time (Θ)	Clock Time	Dry Gas Meter Reading (V_m)	Velocity Head (Δp)	Desired Orifice ΔH (ΔH)	Actual Orifice ΔH (ΔH)	Stack Temp (t_s)	Meter Inlet Temp (t_{mi})	Meter Outlet Temp (t_{mo})	Filter Temp	Impinger Exit Temp	Pump Vacuum
	min	hh:mm:ss	ft^3	in H_2O	in H_2O	in H_2O	°F	°F	°F	°F	°F	in Hg
A-1	0.0	5:35:00	486.802	0.27	1.41	1.50	310	96	95	251	49	6.0
A-2	5.0	5:40:00	490.421	0.29	1.51	1.60	315	96	95	249	49	6.0
A-3	10.0	5:45:00	494.217	0.30	1.56	1.70	316	97	95	250	50	6.0
A-4	15.0	5:50:00	498.014	0.31	1.62	1.70	314	98	95	249	50	6.0
A-5	20.0	5:55:00	501.864	0.30	1.56	1.70	318	98	95	250	50	6.0
A-6	25.0	6:00:00	505.624	0.32	1.67	1.80	315	98	96	251	50	6.0
B-1	30.0	6:10:00	509.734	0.26	1.35	1.50	313	98	96	250	50	6.0
B-2	35.0	6:15:00	513.574	0.26	1.35	1.50	316	99	96	249	51	6.0
B-3	40.0	6:20:00	517.216	0.27	1.41	1.50	314	99	96	248	51	6.0
B-4	45.0	6:25:00	520.743	0.29	1.51	1.60	315	98	95	247	51	6.0
B-5	50.0	6:30:00	524.415	0.30	1.56	1.70	316	98	96	249	52	6.0
B-6	55.0	6:35:00	528.214	0.30	1.56	1.70	312	99	97	250	52	6.0
Last Pt	60.0	6:40:00	532.018									
Final Values	60.0	6:40:00	532.018						Maximum Vacuum			6.0
Average Values				0.29		1.63	315	98	96	249	50	
								97				

METHOD 1 - SAMPLE AND VELOCITY TRAVERSES FOR CIRCULAR SOURCES

Plant Name	LaFarge	**Date**	8/26/2009
Sampling Location	Kiln 2 Outlet	**Project #**	2009-11029
Operator	GC/AM	**# of Ports Available**	4
Stack Type	Circular	**# of Ports Used**	2
Stack Size	Large	**Port Inside Diameter**	4

Circular Stack or Duct Diameter			
Distance to Far Wall of Stack	(L_{fw})	137.25	in
Distance to Near Wall of Stack	(L_{nw})	35.25	in
(=Lfw - Lnw) **Diameter of Stack**	(D)	102.00	in
(=3.14(D/2/Cunits)2) **Area of Stack**	(A_s)	56.75	ft^2

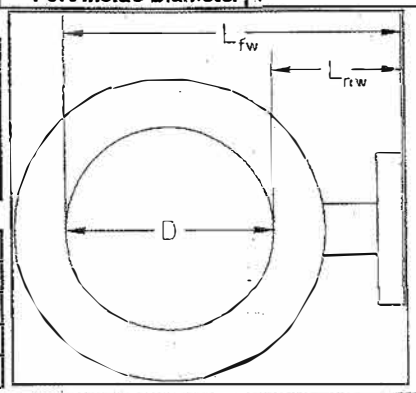

Distance from Port to Disturbances			
Distance Upstream	(B)	1140.00	in
(=B/D) **Diameters Upstream**	(B_D)	11.18	diameters
Distance Downstream	(A)	1020.00	in
(=A/D) **Diameters Downstream**	(A_D)	10.00	diameters

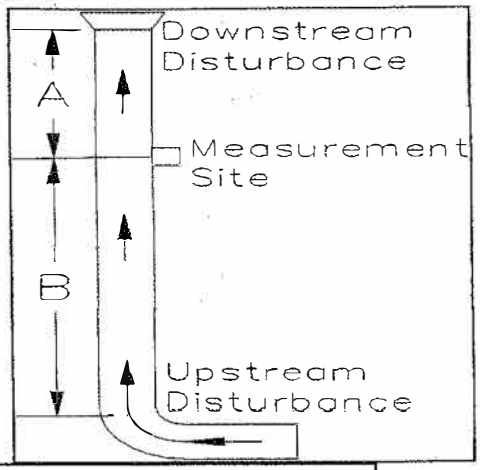

Number of Traverse Points Required			
Diameters to Flow Disturbance		Minimum Number of[1] Traverse Points	
Up Stream	Down Stream	Particulate Points	Velocity Points
2.00-4.99	0.50-1.24	24	16
5.00-5.99	1.25-1.49	20	16
6.00-6.99	1.50-1.74	16	12
7.00-7.99	1.75-1.99	12	12
>= 8.00	>=2.00	8 or 12[2]	8 or 12[2]
Upstream Spec		12	12
Downstream Spec		12	12
Traverse Pts Required		12	12

[1] Check Minimum Number of Points for the Upstream and Downstream conditions, then use the largest.
[2] 8 for Circular Stacks 12 to 24 inches
12 for Circular Stacks over 24 inches

Number of Traverse Points Used			
2	**Ports by**	6	**Across**
12	**Pts Used**	12	**Required**
☑	**Particulate**	☐	**Velocity**

Location of Traverse Points in Circular Stacks						
Traverse Point Number	(Fraction of Stack Diameter from Inside Wall to Traverse Point) Number of Traverse Points on a Diameter					
	2	4	6	8	10	12
1	.146	.067	.044	.032	.026	.021
2	.854	.250	.146	.105	.082	.067
3		.750	.296	.194	.146	.118
4		.933	.704	.323	.226	.177
5			.854	.677	.342	.250
6			.956	.806	.658	.356
7				.895	.774	.644
8				.968	.854	.750
9					.918	.823
10					.974	.882
11						.933
12						.979

Traverse Point Locations			
Traverse Point Number	Fraction of Stack Diameter	Distance from Inside Wall	Distance Including Nipple Length
		in	in
1	0.044	4 4/8	39 6/8
2	0.146	14 7/8	50 1/8
3	0.296	30 2/8	65 4/8
4	0.704	71 6/8	107
5	0.854	87 1/8	122 3/8
6	0.956	97 4/8	132 6/8
7			
8			
9			
10			
11			
12			

METHOD 3 - GAS ANALYSIS FOR THE DETERMINATION OF DRY MOLECULAR WEIGHT

Plant Name	LaFarge			Date	8/26/2009
Sampling Location	Kiln 2 Outlet			Project #	2009-11029
Operator	GC/AM			# of Ports Used	2
Fuel Type	N/A	Minimum Fuel Factor	1.600	Maximum Fuel Factor	1.800
Orsat Leak Check	☑	PreTest ☑	PostTest	Orsat Identification	

Gas Analysis Data

Run Number	K2-M5-1			Run Start Time	9:25		Run Stop Time	10:30
Sample Analysis Time	Carbon Dioxide Volume (V_{CO2})	Oxygen Volume (V_{O2})	Carbon Monoxide Volume (V_{CO})	Carbon Dioxide Conc. ($\%CO_2$)	Oxygen Conc. ($\%O_2$)	Carbon Monoxide Conc. (%CO)	Nitrogen Conc. ($\%N_2$)	Dry Molecular Weight (M_d)	Molecular Weight Deviation (ΔM_d)
hh:mm	ml	ml	ml	percent	percent	percent	percent	lb/lb-mole	lb/lb-mole
Fyrite	18.5	26.9		18.5	8.4	0.0	73.1	31.30	0.00
	18.5	26.9		18.5	8.4	0.0	73.1	31.30	0.00
	18.5	26.9		18.5	8.4	0.0	73.1	31.30	0.00
Results			Averages	18.5	8.4	0.0	73.1	31.30	
Average Calculated Fuel Factor			$(F_o)_{avg}$	0.676		Molecular Wt Deviation < 0.3?			☑
Average Excess Air			$(\%EA)_{avg}$	77.1	percent	Fuel Factor in Handbook Range?			☑

Gas Analysis Data

Run Number	K2-M5-2			Run Start Time	10:40		Run Stop Time	11:45
Sample Analysis Time	Carbon Dioxide Volume (V_{CO2})	Oxygen Volume (V_{O2})	Carbon Monoxide Volume (V_{CO})	Carbon Dioxide Conc. ($\%CO_2$)	Oxygen Conc. ($\%O_2$)	Carbon Monoxide Conc. (%CO)	Nitrogen Conc. ($\%N_2$)	Dry Molecular Weight (M_d)	Molecular Weight Deviation (ΔM_d)
hh:mm	ml	ml	ml	percent	percent	percent	percent	lb/lb-mole	lb/lb-mole
Fyrite	17.5	26.7		17.5	9.2	0.0	73.3	31.17	0.00
	17.5	26.7		17.5	9.2	0.0	73.3	31.17	0.00
	17.5	26.7		17.5	9.2	0.0	73.3	31.17	0.00
Results			Averages	17.5	9.2	0.0	73.3	31.17	
Average Calculated Fuel Factor			$(F_o)_{avg}$	0.669		Molecular Wt Deviation < 0.3?			☑
Average Excess Air			$(\%EA)_{avg}$	90.6	percent	Fuel Factor in Handbook Range?			☑

Gas Analysis Data

Run Number	K2-M5-3			Run Start Time	11:55		Run Stop Time	13:00
Sample Analysis Time	Carbon Dioxide Volume (V_{CO2})	Oxygen Volume (V_{O2})	Carbon Monoxide Volume (V_{CO})	Carbon Dioxide Conc. ($\%CO_2$)	Oxygen Conc. ($\%O_2$)	Carbon Monoxide Conc. (%CO)	Nitrogen Conc. ($\%N_2$)	Dry Molecular Weight (M_d)	Molecular Weight Deviation (ΔM_d)
hh:mm	ml	ml	ml	percent	percent	percent	percent	lb/lb-mole	lb/lb-mole
Fyrite	18.0	27.1		18.0	9.1	0.0	72.9	31.24	0.00
	18.0	27.1		18.0	9.1	0.0	72.9	31.24	0.00
	18.0	27.1		18.0	9.1	0.0	72.9	31.24	0.00
Results			Averages	18.0	9.1	0.0	72.9	31.24	
Average Calculated Fuel Factor			$(F_o)_{avg}$	0.656		Molecular Wt Deviation < 0.3?			☑
Average Excess Air			$(\%EA)_{avg}$	89.7	percent	Fuel Factor in Handbook Range?			☑

Fuel Factor Fo

Fuel Type	Minimum	Maximum
Coal, Anthracite	1.016	1.130
Coal, Lignite	1.016	1.130
Coal, Bituminous	1.083	1.230
Oil, Distillate	1.260	1.413
Oil, Residual	1.210	1.370
Gas, Natural	1.600	1.836
Gas, Propane	1.434	1.586
Gas, Butane	1.405	1.553
Wood	1.000	1.120
Wood Bark	1.003	1.130

Formulas Used

$\%CO_2 = V_{CO2}$

$\%O_2 = V_{O2} - V_{CO2}$

$\%CO = V_{CO} - V_{O2}$

$\%N_2 = 100 - \%CO_2 - \%O_2 - \%CO$

$M_d = .44(\%CO_2) + .32(\%O_2) + .28(\%N_2 + \%CO)$

$\Delta M_d = M_d - M_{d_{avg}}$

$F_o = (20.9 - \%O_2 - .5\%CO)/(\%CO_2 + \%CO)$

$\%EA = 100(\%O_2 - .5\%CO)/(.264\%NO_2 - (\%O_2 - .5\%CO))$

METHOD 4 - DETERMINATION OF MOISTURE CONTENT IN STACK GASES

Plant Name	LaFarge			Date	8/26/2009
Sampling Location	Kiln 2 Outlet			Project #	2009-11029
Operator	GC/AM			# of Ports Used	2
Stack Type	Circular			Meter Box Number	001
Train Leak Check	☑	PreTest	☑ PostTest	Meter Cal Factor (Y)	0.983

Moisture Content Data							
Run Number	K2-M5-1		Run Start Time	9:25		Run Stop Time	10:30
Total Meter Volume	(V_m)	51.248	dcf	Barometric Press.	(P_b)	30.37	in Hg
Avg Meter Temp	$(t_m)_{avg}$	84	°F	Stack Static Press.	(P_{static})	-1.20	in H_2O
Avg Stack Temp	$(t_s)_{avg}$	346	°F	Avg Orifice Press.	$(\Delta H)_{avg}$	2.55	in H_2O
		Impinger 1	Impinger 2	Impinger 3	Impinger 4	Impinger 5	Impinger 6	Impinger 7
		ml	ml	ml	g	ml	ml	ml
Contents		DI	DI		Sil Gel			
Final Value	$(V_f),(W_f)$	400.00			164.50			
Initial Value	$(V_i),(W_i)$	200.00			150.00			
Net Value	$(V_n),(W_n)$	200.0			14.5			
Results								
Total Volume	(V_t)	200.00	ml	Water Vol Condensed	$(V_{wc(std)})$	9.414	scf
Total Weight	(W_t)	14.50	g	Water Vol Weighed	$(V_{wsg(std)})$	0.684	scf
Std Meter Volume	$(V_{m(std)})$	49.910	dscf	Sat. Moisture Content	$(B_{ws(svp)})$	100.0	%
Calc Moisture Content	$(B_{ws(calc)})$	16.8	%	Final Moisture Content	(B_{ws})	16.8	%

Moisture Content Data							
Run Number	K2-M5-2		Run Start Time	10:40		Run Stop Time	11:45
Total Meter Volume	(V_m)	53.991	dcf	Barometric Press.	(P_b)	30.37	in Hg
Avg Meter Temp	$(t_m)_{avg}$	96	°F	Stack Static Press.	(P_{static})	-1.20	in H_2O
Avg Stack Temp	$(t_s)_{avg}$	348	°F	Avg Orifice Press.	$(\Delta H)_{avg}$	2.50	in H_2O
		Impinger 1	Impinger 2	Impinger 3	Impinger 4	Impinger 5	Impinger 6	Impinger 7
		ml	ml	ml	g	ml	ml	ml
Contents		DI	DI		Sil Gel			
Final Value	$(V_f),(W_f)$	436.00			163.60			
Initial Value	$(V_i),(W_i)$	200.00			150.00			
Net Value	$(V_n),(W_n)$	236.0			13.6			
Results								
Total Volume	(V_t)	236.00	ml	Water Vol Condensed	$(V_{wc(std)})$	11.109	scf
Total Weight	(W_t)	13.60	g	Water Vol Weighed	$(V_{wsg(std)})$	0.641	scf
Std Meter Volume	$(V_{m(std)})$	51.433	dscf	Sat. Moisture Content	$(B_{ws(svp)})$	100.0	%
Calc Moisture Content	(B_{ws})	18.6	%	Final Moisture Content	(B_{ws})	18.6	%

Moisture Content Data							
Run Number	K2-M5-3		Run Start Time	11:55		Run Stop Time	13:00
Total Meter Volume	(V_m)	54.307	dcf	Barometric Press.	(P_b)	30.37	in Hg
Avg Meter Temp	$(t_m)_{avg}$	100	°F	Stack Static Press.	(P_{static})	-1.20	in H_2O
Avg Stack Temp	$(t_s)_{avg}$	347	°F	Avg Orifice Press.	$(\Delta H)_{avg}$	2.49	in H_2O
		Impinger 1	Impinger 2	Impinger 3	Impinger 4	Impinger 5	Impinger 6	Impinger 7
		ml	ml	ml	g	ml	ml	ml
Contents		DI	DI		Sil Gel			
Final Value	$(V_f),(W_f)$	410.00			162.20			
Initial Value	$(V_i),(W_i)$	200.00			150.00			
Net Value	$(V_n),(W_n)$	210.0			12.2			
Results								
Total Volume	(V_t)	210.00	ml	Water Vol Condensed	$(V_{wc(std)})$	9.885	scf
Total Weight	(W_t)	12.20	g	Water Vol Weighed	$(V_{wsg(std)})$	0.575	scf
Std Meter Volume	$(V_{m(std)})$	51.418	dscf	Sat. Moisture Content	$(B_{ws(svp)})$	100.0	%
Calc Moisture Content	(B_{ws})	16.9	%	Final Moisture Content	(B_{ws})	16.9	%

ISOKINETIC SAMPLING DATA

Plant Name	LaFarge	Date	8/26/2009
Sampling Location	Kiln 2 Outlet	Project #	2009-11029
Operator	GC/AM	Run #	K2-M5-1
# of Points Across	6	# of Ports Used	2

Ideal Nozzle Diameter and IsoKinetic Factor Setup			
Pitot Tube Coefficient	(C_p)	0.840	
Avg Stack Temp	(t_s)	345	°F
Avg Gas Meter Temp	(t_m)	85	°F
DH @ 0.75 SCFM	($\Delta H@$)	1.89	in H_2O
Avg Pitot Tube Diff. Pressure	(Δp_{avg})	0.82	in H_2O
Stack Moisture Content	(B_{ws})	14.5	%
Stack Dry Molecular Weight	(M_{ds})	31.55	lb/lb-mole
Estimated Orifice Flow Rate	(Q_m)	0.750	acfm
DP to DH Isokinetic Factor	(K)	2.93	

Sampling Equipment			
Meter #	001		
Meterbox Cal. Factor	(Y)	0.983	
Nozzle #	N265		
Actual Nozzle Diameter	(D_{na})	0.2650	in
Req. Nozzle Diameter	(D_{ni})	0.2544	in
Probe # / Length		120.00	ft
Liner Material	ss		
Sample Case / Oven #			
Impinger Case #			

Pressures			
Barometric Pressure	(P_b)	30.37	in Hg
Stack Static Pressure	(P_{static})	-1.20	in H_2O
Absolute Stack Pressure	(P_s)	30.28	in Hg
Absolute Meter Pressure	(P_m)	30.51	in Hg

ΔV_m		Leak Checks			
Pre	0	ft^3/min	@	14	in Hg
Mid		ft^3/min	@		in Hg
Post	0	ft^3/min	@	14	in Hg
ΔV_m <	0.020	ft^3/min	☑	Leak Check OK?	
Pitot OK?		☑	Orsat OK?		☑

Traverse Point #	Sampling Time (Θ)	Clock Time	Dry Gas Meter Reading (V_m)	Velocity Head (Δp)	Desired Orifice ΔH (ΔH)	Actual Orifice ΔH (ΔH)	Stack Temp (t_s)	Meter Inlet Temp (t_{mi})	Meter Outlet Temp (t_{mo})	Filter Temp	Impinger Exit Temp	Pump Vacuum
	min	hh:mm:ss	ft^3	in H_2O	in H_2O	in H_2O	°F	°F	°F	°F	°F	in Hg
A-1	0.0	9:25:00	626.500	0.860	2.518	2.500	345	80	77	250	50	6.0
A-2	5.0	9:30:00	630.715	0.880	2.576	2.600	348	82	78	251	50	6.0
A-3	10.0	9:35:00	634.915	0.900	2.635	2.600	349	82	79	249	50	6.0
A-4	15.0	9:40:00	639.248	0.840	2.459	2.500	345	83	80	248	50	6.0
A-5	20.0	9:45:00	643.582	0.860	2.518	2.500	348	84	80	249	51	6.0
A-6	25.0	9:50:00	647.711	0.870	2.547	2.600	347	86	81	251	51	6.0
B-1	30.0	10:00:00	651.885	0.840	2.459	2.500	348	87	82	249	51	6.0
B-2	35.0	10:05:00	656.124	0.850	2.489	2.500	347	88	83	251	51	6.0
B-3	40.0	10:10:00	660.352	0.860	2.518	2.500	346	90	85	250	52	6.0
B-4	45.0	10:15:00	664.526	0.880	2.576	2.600	344	92	85	249	52	6.0
B-5	50.0	10:20:00	668.765	0.890	2.606	2.600	345	93	86	250	52	6.0
B-6	55.0	10:25:00	672.869	0.890	2.606	2.600	344	94	86	251	52	6.0
Last Pt	60.0	10:30:00	677.748									
Last Pt	60.0	10:30:00	677.748						Maximum Vacuum			6.0
Average Values				0.87	2.55	346	87	82	250	51		
							84					

ISOKINETIC SAMPLING DATA

Plant Name	LaFarge	Date	8/26/2009
Sampling Location	Kiln 2 Outlet	Project #	2009-11029
Operator	GC/AM	Run #	K2-M5-2
# of Points Across	6	# of Ports Used	2

Ideal Nozzle Diameter and IsoKinetic Factor Setup			
Pitot Tube Coefficient	(C_p)	0.840	
Avg Stack Temp	(t_s)	345	°F
Avg Gas Meter Temp	(t_m)	85	°F
DH @ 0.75 SCFM	($\Delta H@$)	1.89	in H_2O
Avg Pitot Tube Diff. Pressure	(Δp_{avg})	0.82	in H_2O
Stack Moisture Content	(B_{ws})	14.5	%
Stack Dry Molecular Weight	(M_{ds})	31.30	lb/lb-mole
Estimated Orifice Flow Rate	(Q_m)	0.750	acfm
DP to DH Isokinetic Factor	(K)	2.93	

Sampling Equipment			
Meter #	001		
Meterbox Cal. Factor	(Y)	0.983	
Nozzle #	N265		
Actual Nozzle Diameter	(D_{na})	0.2650	in
Req. Nozzle Diameter	(D_{ni})	0.2539	in
Probe # / Length		120.00	ft
Liner Material	ss		
Sample Case / Oven #			
Impinger Case #			

Pressures			
Barometric Pressure	(P_b)	30.37	in Hg
Stack Static Pressure	(P_{static})	-1.20	in H_2O
Absolute Stack Pressure	(P_s)	30.28	in Hg
Absolute Meter Pressure	(P_m)	30.51	in Hg

ΔV_m		Leak Checks			
Pre	0.001	ft^3/min	@	15	in Hg
Mid		ft^3/min	@		in Hg
Post	0.001	ft^3/min	@	15	in Hg
ΔV_m <	0.020	ft^3/min	☑	Leak Check OK?	
Pitot OK?		☑	Orsat OK?		☑

Traverse Point #	Sampling Time (Θ)	Clock Time	Dry Gas Meter Reading (V_m)	Velocity Head (Δp)	Desired Orifice ΔH (ΔH)	Actual Orifice ΔH (ΔH)	Stack Temp (t_s)	Meter Inlet Temp (t_{mi})	Meter Outlet Temp (t_{mo})	Filter Temp	Impinger Exit Temp	Pump Vacuum
	min	hh:mm:ss	ft^3	in H_2O	in H_2O	in H_2O	°F	°F	°F	°F	°F	in Hg
A-1	0.0	10:40:00	679.115	0.870	2.545	2.500	350	95	92	251	49	6.0
A-2	5.0	10:45:00	683.542	0.880	2.575	2.600	345	96	92	250	49	6.0
A-3	10.0	10:50:00	688.149	0.860	2.516	2.500	348	97	93	248	49	6.0
A-4	15.0	10:55:00	692.745	0.840	2.458	2.400	347	98	93	249	49	6.0
A-5	20.0	11:00:00	697.142	0.850	2.487	2.500	348	98	93	247	49	6.0
A-6	25.0	11:05:00	701.698	0.870	2.545	2.500	347	99	93	248	49	6.0
B-1	30.0	11:15:00	706.204	0.840	2.458	2.400	348	99	94	249	50	6.0
B-2	35.0	11:20:00	710.542	0.850	2.487	2.400	348	99	95	251	50	6.0
B-3	40.0	11:25:00	714.965	0.860	2.516	2.500	347	100	95	249	50	6.0
B-4	45.0	11:30:00	719.419	0.870	2.545	2.500	344	100	96	251	51	6.0
B-5	50.0	11:35:00	723.856	0.890	2.604	2.600	349	101	97	248	51	6.0
B-6	55.0	11:40:00	728.503	0.880	2.575	2.600	350	101	97	249	51	6.0
Last Pt	60.0	11:45:00	733.106									
Final Value	60.0	11:45:00	733.106							Maximum Vacuum		6.0
Average Values				0.86		2.50	348	99	94	249	50	
								96				

ISOKINETIC SAMPLING DATA

Plant Name	LaFarge	Date	8/26/2009
Sampling Location	Kiln 2 Outlet	Project #	2009-11029
Operator	GC/AM	Run #	K2-M5-3
# of Points Across	6	# of Ports Used	2

Ideal Nozzle Diameter and IsoKinetic Factor Setup			
Pitot Tube Coefficient	(C_p)	0.840	
Avg Stack Temp	(t_s)	350	°F
Avg Gas Meter Temp	(t_m)	90	°F
DH @ 0.75 SCFM	($\Delta H@$)	1.89	in H_2O
Avg Pitot Tube Diff. Pressure	(Δp_{avg})	0.82	in H_2O
Stack Moisture Content	(B_{ws})	14.5	%
Stack Dry Molecular Weight	(M_{ds})	31.17	lb/lb-mole
Estimated Orifice Flow Rate	(Q_m)	0.750	acfm
DP to DH Isokinetic Factor	(K)	2.93	

Sampling Equipment			
Meter #	001		
Meterbox Cal. Factor	(Y)	0.983	
Nozzle #	N265		
Actual Nozzle Diameter	(D_{na})	0.2650	in
Req. Nozzle Diameter	(D_{ni})	0.2529	in
Probe # / Length		120.00	ft
Liner Material	SS		
Sample Case / Oven #			
Impinger Case #			

Pressures			
Barometric Pressure	(P_b)	30.37	in Hg
Stack Static Pressure	(P_{static})	-1.20	in H_2O
Absolute Stack Pressure	(P_s)	30.28	in Hg
Absolute Meter Pressure	(P_m)	30.51	in Hg

ΔV_m		Leak Checks			
Pre	0.001	ft^3/min	@	17	in Hg
Mid		ft^3/min	@		in Hg
Post	0.001	ft^3/min	@	17	in Hg
ΔV_m <	0.020	ft^3/min	☑	Leak Check OK?	
Pitot OK?	☑		Orsat OK?	☑	

Traverse Point #	Sampling Time (Θ)	Clock Time	Dry Gas Meter Reading (V_m)	Velocity Head (Δp)	Desired Orifice ΔH (ΔH)	Actual Orifice ΔH (ΔH)	Stack Temp (t_s)	Meter Inlet Temp (t_{mi})	Meter Outlet Temp (t_{mo})	Filter Temp	Impinger Exit Temp	Pump Vacuum
	min	hh:mm:ss	ft^3	in H_2O	in H_2O	in H_2O	°F	°F	°F	°F	°F	in Hg
A-1	0.0	11:55:00	733.651	0.87	2.55	2.50	348	99	96	250	50	6.0
A-2	5.0	12:00:00	738.168	0.86	2.52	2.50	350	99	97	250	50	6.0
A-3	10.0	12:05:00	742.685	0.88	2.58	2.50	349	100	97	250	50	6.0
A-4	15.0	12:10:00	747.249	0.84	2.46	2.40	350	100	97	251	50	6.0
A-5	20.0	12:15:00	751.706	0.82	2.41	2.40	347	101	97	250	51	6.0
A-6	25.0	12:20:00	755.996	0.83	2.43	2.40	349	102	98	249	51	6.0
B-1	30.0	12:30:00	760.651	0.85	2.49	2.50	345	103	98	248	51	6.0
B-2	35.0	12:35:00	765.124	0.88	2.58	2.60	348	103	98	247	51	6.0
B-3	40.0	12:40:00	769.814	0.89	2.61	2.60	346	104	97	250	51	6.0
B-4	45.0	12:45:00	774.356	0.87	2.55	2.50	343	104	98	251	52	6.0
B-5	50.0	12:50:00	778.614	0.86	2.52	2.50	344	105	98	249	52	6.0
B-6	55.0	12:55:00	783.452	0.84	2.46	2.50	348	105	99	250	52	6.0
Last Pt	60.0	13:00:00	787.958									
Final Value	60.0	13:00:00	787.958							Maximum Vacuum		6.0
Average Values				0.86		2.49	347	102	98	250	51	
								100				

APPENDIX C. ANALYTICAL DATA

CLIENT: RMC ENVIRONMENTAL

Project: LAFARGE NA-JOPPA PLANT

WorkOrder: 090900356

Date: *16-September-2009*

CASE NARRATIVE

Unless other wise noted, analysis conducted according to the Methods specified in 40 CFR Parts 60 or 63.

Unless otherwise noted, all method blanks, laboratory spikes, and/or matrix spikes met quality assurance objectives.

Sample results relate only to the analytes of interest tested and to the sample received at the laboratory.

Accreditation by the State of Illinois or Wisconsin is not an endorsement or a guarantee of the validity of data generated.

The Reporting Limit listed on the Report of Laboratory Analysis is our reporting limit for the analyte reported. For most test methods this reporting limit is primarily based upon the lowest point in the calibration curve. The Reporting Limit may not reflect the regulatory limit for the given analyte.

Kiln 1 had much thicker PM on the filter than in the probe rinses whereas, Kiln2 acetone contained a higher concentration of much finer particulate.

Method References:

SW=USEPA, Test Methods for Evaluating Solid Waste, SW-846.

E=USEPA Methods for the Determination of Inorganic Substances in Environmental Samples; Methods for Chemical Analysis of Water and Wastes; Methods for Organic Chemical Analysis of Municipal and Industrial Wastewater, 40 CFR Part 6 0, App A; methods for the Determination of Particulate Matter in Environmental Samples; Methods for the Determination of Organic Compounds in Environmental Samples.

SM= APHA, Standard Methods for the Examination of Water and Wastewater.

D=ASTM, Annual Book of Standards

Report of Laboratory Analysis

CLIENT: RMC ENVIRONMENTAL
Project: LAFARGE NA-JOPPA PLANT **Report Date:** 9/16/2009
WorkOrder: 090900356

Client Sample K1-M5-01 filter **Collection** 8/25/2009
Lab ID: 090900356-01A **Matrix:** Air

Analyses	Result	Reporting Limit	Qual	Units	Date Analyzed	Batch	Analyst
Particulate Matter		Method: METHOD 5					
Particulate Matter	60.3	0.1		mg, Total	9/16/09	R403106	RM2

Client Sample K1-M5-01 Acetone Rinse **Collection** 8/25/2009
Lab ID: 090900356-01B **Matrix:** Air

Analyses	Result	Reporting Limit	Qual	Units	Date Analyzed	Batch	Analyst
Particulate Matter		Method: METHOD 5					
Particulate Matter	5.3	0.1		mg, Total	9/16/09	R403106	RM2

Client Sample K1-M5-02 filter **Collection** 8/25/2009
Lab ID: 090900356-02A **Matrix:** Air

Analyses	Result	Reporting Limit	Qual	Units	Date Analyzed	Batch	Analyst
Particulate Matter		Method: METHOD 5					
Particulate Matter	51.2	0.1		mg, Total	9/16/09	R403106	RM2

Client Sample K1-M5-01 Acetone Rinse **Collection** 8/25/2009
Lab ID: 090600219-02B **Matrix:** Air

Analyses	Result	Reporting Limit	Qual	Units	Date Analyzed	Batch	Analyst
Particulate Matter		Method: METHOD 5					
Particulate Matter	5.8	0.1		mg, Total	9/16/09	R403106	RM2

Qualifiers:
B - Analyte detected in the associated Method Blank
E - Estimated
H - Holding Time Exceeded
C - Laboratory not accredited for this parameter
S - Spike Recovery outside accepted recovery limits
R - RPD outside accepted recovery limits

Report of Laboratory Analysis

CLIENT: RMC ENVIRONMENTAL
Project: LAFARGE NA-JOPPA PLANT **Report Date:** 9/16/2009
WorkOrder: 090900356

Client Sample K1-M5-03 filter **Collection** 8/25/2009
Lab ID: 090900356-03A **Matrix:** Air

Analyses	Result	Reporting Limit	Qual	Units	Date Analyzed	Batch	Analyst
Particulate Matter		Method: METHOD 5					
Particulate Matter	43.2	0.1		mg, Total	9/16/09	R403106	RM2

Client Sample K1-M5-03 Acetone Rinse **Collection** 8/25/2009
Lab ID: 090900356-03B **Matrix:** Air

Analyses	Result	Reporting Limit	Qual	Units	Date Analyzed	Batch	Analyst
Particulate Matter		Method: METHOD 5					
Particulate Matter	3.2	0.1		mg, Total	9/16/09	R403106	RM2

Client Sample K2-M5/202-01 filter **Collection** 8/26/2009
Lab ID: 090900356-01A **Matrix:** Air

Analyses	Result	Reporting Limit	Qual	Units	Date Analyzed	Batch	Analyst
Particulate Matter		Method: METHOD 5					
Particulate Matter	10.8	0.1		mg, Total	9/16/09	R403106	RM2

Client Sample U1-M5/202-01 Acetone Rinse **Collection** 8/26/2009
Lab ID: 090900356-01B **Matrix:** Air

Analyses	Result	Reporting Limit	Qual	Units	Date Analyzed	Batch	Analyst
Particulate Matter		Method: METHOD 5					
Particulate Matter	73.1	0.1		mg, Total	9/16/09	R403106	RM2

Qualifiers:
B - Analyte detected in the associated Method Blank
E - Estimated
H - Holding Time Exceeded
C - Laboratory not accredited for this parameter
S - Spike Recovery outside accepted recovery limits
R - RPD outside accepted recovery limits

Report of Laboratory Analysis

CLIENT: RMC ENVIRONMENTAL
Project: LAFARGE NA-JOPPA PLANT **Report Date:** 9/16/2009
WorkOrder: 090900356

Client Sample K2-M5-02 filter **Collection** 8/26/2009
Lab ID: 090900356-02A **Matrix:** Air

Analyses	Result	Reporting Limit	Qual	Units	Date Analyzed	Batch	Analyst
Particulate Matter		Method: METHOD 5					
Particulate Matter	16.7	0.1		mg, Total	9/16/09	R403106	RM2

Client Sample K2-M5-02 Acetone Rinse **Collection** 8/26/2009
Lab ID: 090900356-02B **Matrix:** Air

Analyses	Result	Reporting Limit	Qual	Units	Date Analyzed	Batch	Analyst
Particulate Matter		Method: METHOD 5					
Particulate Matter	57.6	0.1		mg, Total	9/16/09	R403106	RM2

Client Sample K2-M5-03 filter **Collection** 8/26/2009
Lab ID: 090900356-03A **Matrix:** Air

Analyses	Result	Reporting Limit	Qual	Units	Date Analyzed	Batch	Analyst
Particulate Matter		Method: METHOD 5					
Particulate Matter	21.1	0.1		mg, Total	9/16/09	R403106	RM2

Client Sample K2-M5-03 Acetone Rinse **Collection** 8/26/2009
Lab ID: 090900356-03B **Matrix:** Air

Analyses	Result	Reporting Limit	Qual	Units	Date Analyzed	Batch	Analyst
Particulate Matter		Method: METHOD 5					
Particulate Matter	58.1	0.1		mg, Total	9/16/06	R403106	RM2

Qualifiers:

B - Analyte detected in the associated Method Blank
E - Estimated
H - Holding Time Exceeded
C - Laboratory not accredited for this parameter
S - Spike Recovery outside accepted recovery limits
R - RPD outside accepted recovery limits

Report of Laboratory Analysis

CLIENT: RMC ENVIRONMENTAL
Project: LAFARGE NA-JOPPA PLANT **Report Date:** 9/16/2009
WorkOrder: 090900356

Client Sample Reagent blanks - Acetone **Collection** 8/25/2009
Lab ID: 090900356-04A **Matrix:** Air

Analyses	Result	Reporting Limit	Qual	Units	Date Analyzed	Batch	Analyst
Particulate Matter		Method:	METHOD 5				
Particulate Matter	0.1	0.2		mg, Total	9/16/09	R403106	RM2

Qualifiers:
B - Analyte detected in the associated Method Blank
E - Estimated
H - Holding Time Exceeded
C - Laboratory not accredited for this parameter
S - Spike Recovery outside accepted recovery limits
R - RPD outside accepted recovery limits

APPENDIX D. REFERENCE MEASUREMENT SYSTEM PERFORMANCE TEST DATA

PITOT INSPECTIONS
METERBOX CALIBRATIONS & AUDITS

S-TYPE PITOT TUBE / M5 SAMPLING PROBE INSPECTION

Project Number	2009-11029		
Probe Number	M5-120-1		
EPA Method 2 S-Type Pitot Criterea			
Level	Y	(Y/N)	PASS
Obstructions	N	(Y/N)	PASS
Damaged	N	(Y/N)	PASS
Type of material	SS		
-10 < alpha1 < +10	0.2	Degrees	PASS
-10 < alpha2 < +10	0.2	Degrees	PASS
-5 < Beta1 < +5	0.0	Degrees	PASS
-5 < Beta2 < +5	0.0	Degrees	PASS
z or Gamma	0.0	Degrees	
w or Theta	0.2	Degrees	
A	0.954	Inches	
{z = A Tan (Gamma)} < 0.125	0.000	Inches	PASS
{w = A Tan (Theta)} < 0.03125	0.003	Inches	PASS
$0.1875 < D_t < 0.375$	0.375	Inches	PASS
$1.05\ D_t < P_a < 1.5\ D_t$	0.480	Inches	PASS
$1.05\ D_t < P_b < 1.5\ D_t$	0.474	Inches	PASS
$\lvert P_a - P_b \rvert < 0.0625$	0.006	Inches	PASS

S-TYPE PITOT TUBE OVERVIEW

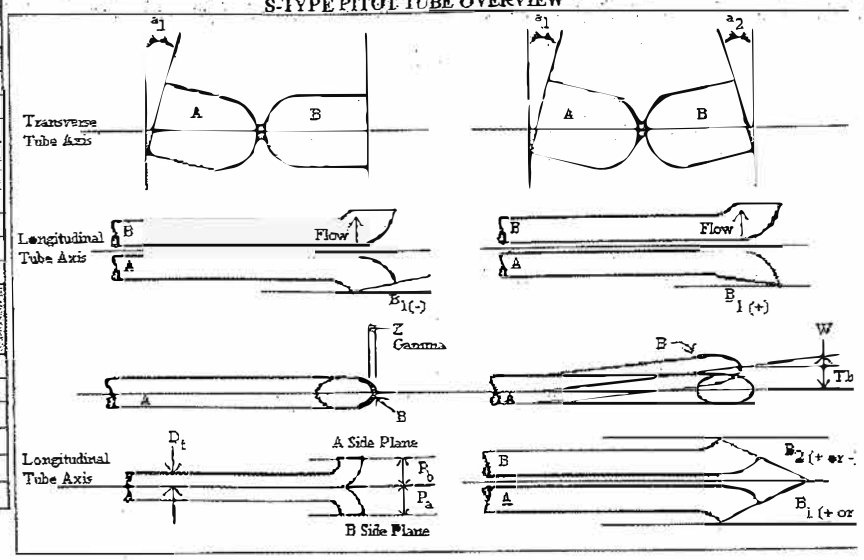

EPA Method 2 Sample Probe Criterea			
T/C Functioning	Y	(Y/N)	PASS
Obstructions	N	(Y/N)	PASS
Damaged	N	(Y/N)	PASS
Offset Thermocouple	Y	(Y/N)	
D_n	0.50	Inches	
W	3.00	Inches	PASS
X >= .75"For a D_n = .5"	0.750	Inches	PASS
Y	3.1	Inches	PASS
Z	0.750	Inches	PASS

SAMPLING PROBE OVERVIEW

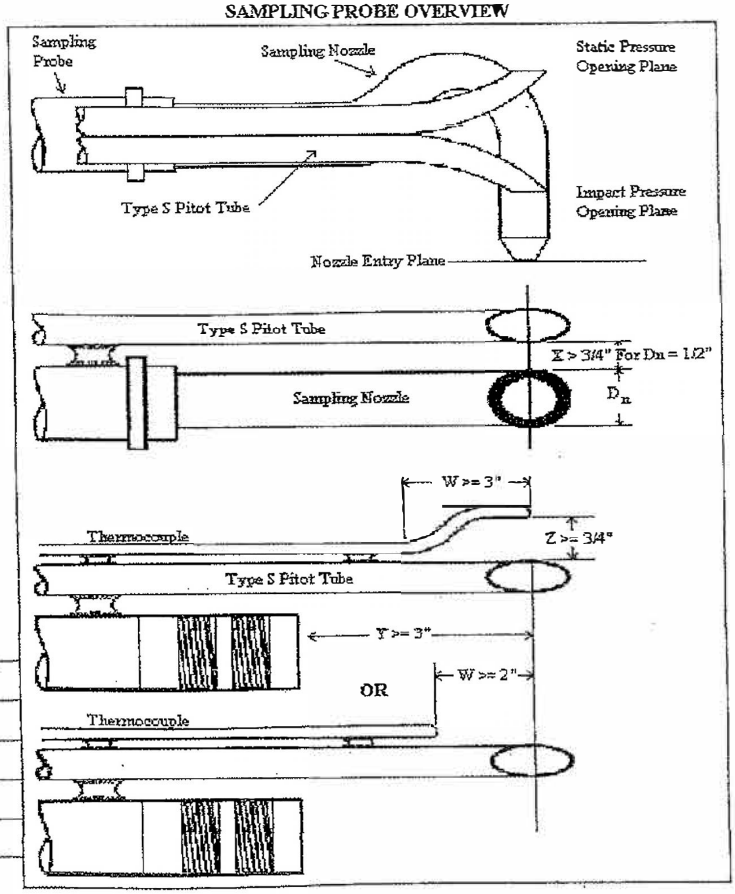

COMMENTS:

Same probe used on both units.

I certify that this pitot tube meets or exceeds all specifications, criteria and/ or applicable design features and is hereby assigned a pitot tube calibration factor of 0.84.

Signature: GC

Date: 8/25/09

Cyclonic Flow Check

Source Name: Lafarge NA
City, State: Joppa Plant - Grand Chain, IL
Sampling Location: Kiln 2

Date: 8/26/2009
Calc By: GC/AM
Project Number: 2009-11029

Check List

Perform Pitot tube Inspection: Yes

Level and Zero Manometer: Yes

Data Summary

Traverse Points	Pt No.	Angle		Pt No.	% of Dia.
	1	1		13	2
	2	2		14	2
	3	2		15	1
	4	0		16	1
	5	0		17	0
	6	1		18	0
	7			19	
	8			20	
	9			21	
	10			22	
	11			23	
	12			24	

Results

Average Angle: 0.75 Acceptable

CFR 40 Part 60; App A, Method 1 Section 2.4 Limit: 20

Conducted By: AM
Date: 8/26/09

Cyclonic Flow Check

Source Name: Lafarge NA
City, State: Joppa Plant - Grand Chain, IL
Sampling Location: Kiln 1

Date: 8/25/2009
Calc By: GC/AM
Project Number: 2009-11029

Check List

Perform Pitot tube Inspection: Yes

Level and Zero Manometer: Yes

Data Summary

	Pt No.	Angle		Pt No.	% of Dia.
Traverse Points	1	4		13	3
	2	5		14	3
	3	4		15	7
	4	6		16	8
	5	5		17	2
	6	5		18	5
	7			19	
	8			20	
	9			21	
	10			22	
	11			23	
	12			24	

Results

Average Angle: 3.5625 Acceptable

CFR 40 Part 60; App A, Method 1 Section 2.4 Limit: 20

Conducted By: AM
Date: 8/25/09

RMC Environmental, Inc.
EPA Method 5
Meter Box Calibration
Critical Orifice Method
English Meter Box Units, English K' Factor

Revised: 12/7/2001 Version: 1.1

Meterbox Number: RMC 002
Calibrated by: GAC / RMC

Date: 3/15/2009
Barometric Pressure: 30.17 (in. Hg)
Theoretical Critical Vacuum: 14.23 (in. Hg)

IMPORTANT: For valid test results, the Actual Vacuum should be 1 to 2 in. Hg greater than the Theoretical Critical Vacuum shown above.
IMPORTANT: The Critical Orifice Coefficient, K', must be entered in English units, (ft)^3*(deg R)^0.5/((in.Hg)*(min)).

		DRY GAS METER READINGS							CRITICAL ORIFICE READINGS					
		Volume	Volume	Volume	Initial Temps.		Final Temps.		Orifice	K' Orifice	Actual	-- Ambient Temperature --		
dH (in H2O)	Time (min)	Initial (cu ft)	Final (cu ft)	Total (cu ft)	Inlet (deg F)	Outlet (deg F)	Inlet (deg F)	Outlet (deg F)	Serial# (number)	Coefficient (see above)	Vacuum (in Hg)	Initial (deg F)	Final (deg F)	Average (deg F)
0.310	5.50	82.268	84.071	1.803	75.0	76.0	75.0	75.0	40	0.2390	23.0	76.0	77.0	76.5
0.640	5.00	79.901	82.268	2.367	76.0	76.0	75.0	75.0	48	0.3460	22.0	77.0	78.0	77.5
1.200	5.00	84.071	87.256	3.185	76.0	76.0	75.0	75.0	55	0.4610	20.5	78.0	78.0	78.0
2.100	5.00	92.825	96.920	4.095	76.0	76.0	75.0	75.0	63	0.5950	19.0	78.0	78.0	78.0
3.680	5.00	87.256	92.825	5.569	76.0	77.0	75.0	76.0	73	0.8200	16.0	78.0	79.0	78.5

RESULTS

DRY GAS METER		ORIFICE			DRY GAS METER		ORIFICE		
VOLUME CORRECTED	VOLUME CORRECTED	VOLUME CORRECTED	VOLUME CORRECTED	VOLUME NOMINAL	CALIBRATION FACTOR Y		CALIBRATION FACTOR dH@		
Vm(std) (cu ft)	Vm(std) (liters)	Vcr(std) (cu ft)	Vcr(std) (liters)	Vcr (cu ft)	Value (number)	Variation (number)	Value (in H2O)	Value (mm H2O)	Variation (in H2O)
1.794	50.8	1.712	48.5	1.726	0.954	0.003	1.789	45.44	-0.049
2.356	66.7	2.251	63.8	2.274	0.956	0.004	1.765	44.84	-0.072
3.175	89.9	2.998	84.9	3.031	0.944	-0.007	1.866	47.41	0.029
4.091	115.8	3.870	109.6	3.912	0.946	-0.005	1.961	49.80	0.123
5.579	158.0	5.330	151.0	5.394	0.955	0.004	1.807	45.91	-0.030
					0.951		1.838	46.68	
					Maximum Variation =	0.007	Maximum Variation =		0.123

For Calibration Factor Y, the ratio of the reading of the calibration meter to the dry gas meter, acceptable tolerance of individual values from the average is +-0.02. **PASS** **Average Y = 0.951**

For Orifice Calibration Factor dH@, the orifice differential pressure in inches of H20 that equates to 0.75 cfm of air at 68 F and 29.92 inches of Hg, acceptable tolerance of individual values from the average is +-0.2. **PASS** **Average dh@ = 1.838** (in H2O)

SIGNED:_____ Date:_____

RMC Environmental, Inc.
EPA Method 5
Meter Box Calibration
Critical Orifice Method
English Meter Box Units, English K' Factor

Revised: 12/7/2001 Version: 1.1

Meterbox Number: RMC 001
Calibrated by: GAC / RMC

Date: 8/29/2008
Barometric Pressure: 29.98 (in. Hg)
Theoretical Critical Vacuum: 14.14 (in. Hg)

IMPORTANT: For valid test results, the Actual Vacuum should be 1 to 2 in Hg greater than the Theoretical Critical Vacuum shown above.
IMPORTANT: The Critical Orifice Coefficient, K', must be entered in English units, (ft)^3*(deg R)^0.5/((in.Hg)*(min)).

		DRY GAS METER READINGS							CRITICAL ORIFICE READINGS					
		Volume	Volume	Volume	Initial Temps.		Final Temps.		Orifice	K' Orifice	Actual	-- Ambient Temperature --		
dH (in H2O)	Time (min)	Initial (cu ft)	Final (cu ft)	Total (cu ft)	Inlet (deg F)	Outlet (deg F)	Inlet (deg F)	Outlet (deg F)	Serial# (number)	Coefficient (see above)	Vacuum (in Hg)	Initial (deg F)	Final (deg F)	Average (deg F)
0.323	5.00	226.177	227.787	1.610	79.0	80.0	78.0	79.0	40	0.2390	23.1	79.0	79.0	79.0
0.665	5.10	230.875	233.267	2.392	80.0	80.0	79.0	79.0	48	0.3460	22.7	79.0	79.0	79.0
1.190	5.00	227.787	230.875	3.088	80.0	80.0	79.0	79.0	55	0.4610	19.9	79.0	79.0	79.0
2.150	5.00	232.012	235.929	3.917	80.0	80.0	79.0	79.0	63	0.5950	18.5	79.0	79.0	79.0
3.850	5.00	237.184	242.567	5.383	81.0	81.0	79.0	79.0	73	0.8200	15.9	79.0	80.0	79.5

RESULTS

DRY GAS METER		ORIFICE			DRY GAS METER		ORIFICE		
VOLUME CORRECTED	VOLUME CORRECTED	VOLUME CORRECTED	VOLUME CORRECTED	VOLUME NOMINAL	CALIBRATION FACTOR Y		CALIBRATION FACTOR dH@		
Vm(std) (cu ft)	Vm(std) (liters)	Vcr(std) (cu ft)	Vcr(std) (liters)	Vcr (cu ft)	Value (number)	Variation (number)	Value (in H2O)	Value (mm H2O)	Variation (in H2O)
1.581	44.8	1.543	43.7	1.573	0.976	-0.007	1.871	4751	-0.022
2.349	66.5	2.279	64.5	2.322	0.970	-0.013	1.837	4667	-0.055
3.036	86.0	2.977	84.3	3.034	0.980	-0.003	1.852	4705	-0.040
3.860	109.3	3.842	108.8	3.915	0.995	0.012	2.009	5103	0.116
5.322	150.7	5.292	149.9	5.399	0.994	0.011	1.894	4811	0.001
					0.983		1.893	4807	
					Maximum Variation =	0.013	Maximum Variation =		0.116

For Calibration Factor Y, the ratio of the reading of the calibration meter to the dry gas meter, acceptable tolerance of individual values from the average is +-0.02. **PASS** **Average Y = 0.983**

For Orifice Calibration Factor dH@, the orifice differential pressure in inches of H20 that equates to 0.75 cfm of air at 68 F and 29.92 inches of Hg, acceptable tolerance of individual values from the average is +-0.2. **PASS** **Average dh@ = 1.893** (in H2O)

APPENDIX E. PROCESS DATA

KILN 1 8/25/2009
START DATE: 3:08:00 AM
END DATE: 6:45:00 PM

KILN FEED date/time	KILN FEED tonnes	LSI 2 feeder integrated tonnes	TOTAL K1 FEED TONNES	TOTAL K1 FEED US TONS	TOTAL TONS FEED PER RUN
2:50:00 PM	1173.022	27.32	1200.342	1323.14899	
2:51:00 PM	1174.338	27.353	1201.691	1324.636006	
2:52:00 PM	1175.655	27.386	1203.041	1326.124125	
2:53:00 PM	1176.971	27.419	1204.39	1327.611141	
2:54:00 PM	1178.288	27.452	1205.74	1329.099259	
2:55:00 PM	1179.608	27.485	1207.093	1330.590685	
2:56:00 PM	1180.932	27.518	1208.45	1332.08652	
2:57:00 PM	1182.257	27.551	1209.808	1333.583456	
2:58:00 PM	1183.581	27.584	1211.165	1335.079291	
2:59:00 PM	1184.905	27.618	1212.523	1336.576228	
3:00:00 PM	1186.229	27.651	1213.88	1338.072063	
3:01:00 PM	1187.553	27.685	1215.238	1339.569	
3:02:00 PM	1188.877	27.72	1216.597	1341.067039	
3:03:00 PM	1190.201	27.754	1217.955	1342.563976	
3:04:00 PM	1191.525	27.788	1219.313	1344.060913	
3:05:00 PM	1192.845	27.822	1220.667	1345.553441	
3:06:00 PM	1194.16	27.857	1222.017	1347.041559	
3:07:00 PM	1195.476	27.892	1223.368	1348.53078	
3:08:00 PM	1196.791	27.928	1224.719	1350.020001	
3:09:00 PM	1198.107	27.963	1226.07	1351.509222	
3:10:00 PM	1199.422	27.997	1227.419	1352.996238	
3:11:00 PM	1200.736	28.031	1228.767	1354.482152	
3:12:00 PM	1202.05	28.065	1230.115	1355.968066	
3:13:00 PM	1203.364	28.1	1231.464	1357.455082	
3:14:00 PM	1204.678	28.134	1232.812	1358.940996	
3:15:00 PM	1206	28.167	1234.167	1360.434626	
3:16:00 PM	1207.329	28.201	1235.53	1361.937074	
3:17:00 PM	1208.659	28.235	1236.894	1363.440625	
3:18:00 PM	1209.988	28.268	1238.256	1364.941971	
3:19:00 PM	1211.318	28.302	1239.62	1366.445522	
3:20:00 PM	1212.638	28.335	1240.973	1367.936948	
3:21:00 PM	1213.949	28.368	1242.317	1369.418452	
3:22:00 PM	1215.26	28.402	1243.662	1370.901059	
3:23:00 PM	1216.572	28.435	1245.007	1372.383666	
3:24:00 PM	1217.883	28.468	1246.351	1373.865171	
3:25:00 PM	1219.191	28.502	1247.693	1375.344471	
3:26:00 PM	1220.496	28.536	1249.032	1376.820464	
3:27:00 PM	1221.801	28.569	1250.37	1378.295355	
3:28:00 PM	1223.107	28.603	1251.71	1379.77245	
3:29:00 PM	1224.412	28.637	1253.049	1381.248443	
3:30:00 PM	1225.702	28.67	1254.372	1382.706799	
3:31:00 PM	1226.977	28.704	1255.681	1384.149723	
3:32:00 PM	1228.252	28.738	1256.99	1385.592647	
3:33:00 PM	1229.527	28.772	1258.299	1387.035571	
3:34:00 PM	1230.802	28.806	1259.608	1388.478494	
3:35:00 PM	1232.083	28.84	1260.923	1389.928032	
3:36:00 PM	1233.369	28.875	1262.244	1391.384184	
3:37:00 PM	1234.656	28.909	1263.565	1392.840335	
3:38:00 PM	1235.942	28.944	1264.886	1394.296487	
3:39:00 PM	1237.228	28.978	1266.206	1395.751536	

3:40:00 PM	1238.516	29.011	1267.527	1397.207687	
3:41:00 PM	1239.806	29.041	1268.847	1398.662737	
3:42:00 PM	1241.096	29.071	1270.167	1400.117786	
3:43:00 PM	1242.386	29.101	1271.487	1401.572835	
3:44:00 PM	1243.676	29.132	1272.808	1403.028986	
3:45:00 PM	1244.952	29.158	1274.11	1404.464194	
3:46:00 PM	1246.214	29.18	1275.394	1405.87956	
3:47:00 PM	1247.475	29.203	1276.678	1407.294926	
3:48:00 PM	1248.737	29.225	1277.962	1408.710292	
3:49:00 PM	1249.998	29.247	1279.245	1410.124556	
3:50:00 PM	1251.273	29.27	1280.543	1411.555354	
3:51:00 PM	1252.562	29.293	1281.855	1413.001585	
3:52:00 PM	1253.851	29.317	1283.168	1414.448918	
3:53:00 PM	1255.139	29.34	1284.479	1415.894046	
3:54:00 PM	1256.428	29.363	1285.791	1417.340277	
3:55:00 PM	1257.712	29.386	1287.098	1418.780996	
3:56:00 PM	1258.99	29.409	1288.399	1420.215102	
3:57:00 PM	1260.269	29.432	1289.701	1421.650309	
3:58:00 PM	1261.548	29.456	1291.004	1423.086619	
3:59:00 PM	1262.827	29.479	1292.306	1424.521827	
4:00:00 PM	1264.101	29.502	1293.603	1425.951523	
4:01:00 PM	1265.37	29.525	1294.895	1427.375707	
4:02:00 PM	1266.639	29.549	1296.188	1428.800994	
4:03:00 PM	1267.908	29.572	1297.48	1430.225179	
4:04:00 PM	1269.177	29.596	1298.773	1431.650466	
4:05:00 PM	1270.46	29.619	1300.079	1433.090082	
4:06:00 PM	1271.756	29.642	1301.398	1434.544029	
4:07:00 PM	1273.052	29.666	1302.718	1435.999079	
4:08:00 PM	1274.349	29.689	1304.038	1437.454128	
4:09:00 PM	1275.645	29.713	1305.358	1438.909177	
4:10:00 PM	1276.952	29.736	1306.688	1440.375249	
4:11:00 PM	1278.27	29.759	1308.029	1441.853447	
4:12:00 PM	1279.588	29.783	1309.371	1443.332747	**93.31275**
4:13:00 PM	1280.906	29.806	1310.712	1444.810945	
4:14:00 PM	1282.224	29.829	1312.053	1446.289142	
4:15:00 PM	1283.535	29.852	1313.387	1447.759624	
4:16:00 PM	1284.84	29.876	1314.716	1449.224594	
4:17:00 PM	1286.144	29.899	1316.043	1450.687359	
4:18:00 PM	1287.448	29.923	1317.371	1452.151227	
4:19:00 PM	1288.752	29.946	1318.698	1453.613992	
4:20:00 PM	1290.056	29.969	1320.025	1455.076758	
4:21:00 PM	1291.359	29.993	1321.352	1456.539523	
4:22:00 PM	1292.663	30.016	1322.679	1458.002288	
4:23:00 PM	1293.966	30.04	1324.006	1459.465054	
4:24:00 PM	1295.27	30.063	1325.333	1460.927819	
4:25:00 PM	1296.58	30.086	1326.666	1462.397198	
4:26:00 PM	1297.898	30.11	1328.008	1463.876498	
4:27:00 PM	1299.216	30.133	1329.349	1465.354696	
4:28:00 PM	1300.534	30.156	1330.69	1466.832894	
4:29:00 PM	1301.851	30.18	1332.031	1468.311092	
4:30:00 PM	1303.166	30.203	1333.369	1469.785982	
4:31:00 PM	1304.477	30.227	1334.704	1471.257566	
4:32:00 PM	1305.788	30.251	1336.039	1472.72915	
4:33:00 PM	1307.1	30.275	1337.375	1474.201836	
4:34:00 PM	1308.411	30.298	1338.709	1475.672318	
4:35:00 PM	1309.709	30.322	1340.031	1477.129572	
4:36:00 PM	1310.993	30.346	1341.339	1478.571393	

4:37:00 PM	1312.278	30.37	1342.648	1480.014317	
4:38:00 PM	1313.562	30.393	1343.955	1481.455036	
4:39:00 PM	1314.847	30.417	1345.264	1482.89796	
4:40:00 PM	1316.143	30.441	1346.584	1484.353009	
4:41:00 PM	1317.449	30.464	1347.913	1485.817979	
4:42:00 PM	1318.756	30.487	1349.243	1487.284051	
4:43:00 PM	1320.062	30.511	1350.573	1488.750124	
4:44:00 PM	1321.369	30.534	1351.903	1490.216196	
4:45:00 PM	1322.671	30.558	1353.229	1491.677859	
4:46:00 PM	1323.969	30.581	1354.55	1493.134011	
4:47:00 PM	1325.266	30.605	1355.871	1494.590162	
4:48:00 PM	1326.564	30.628	1357.192	1496.046314	
4:49:00 PM	1327.862	30.652	1358.514	1497.503567	
4:50:00 PM	1329.157	30.675	1359.832	1498.956412	
4:51:00 PM	1330.45	30.698	1361.148	1500.407052	
4:52:00 PM	1331.744	30.722	1362.466	1501.859896	
4:53:00 PM	1333.037	30.745	1363.782	1503.310536	
4:54:00 PM	1334.33	30.769	1365.099	1504.762279	
4:55:00 PM	1335.63	30.792	1366.422	1506.220635	
4:56:00 PM	1336.937	30.816	1367.753	1507.687809	
4:57:00 PM	1338.244	30.839	1369.083	1509.153882	
4:58:00 PM	1339.551	30.863	1370.414	1510.621056	
4:59:00 PM	1340.859	30.886	1371.745	1512.088231	
5:00:00 PM	1342.169	30.91	1373.079	1513.558712	
5:01:00 PM	1343.483	30.934	1374.417	1515.033603	
5:02:00 PM	1344.796	30.957	1375.753	1516.506289	
5:03:00 PM	1346.11	30.981	1377.091	1517.98118	
5:04:00 PM	1347.424	31.005	1378.429	1519.456071	
5:05:00 PM	1348.735	31.028	1379.763	1520.926553	
5:06:00 PM	1350.043	31.052	1381.095	1522.394829	
5:07:00 PM	1351.351	31.075	1382.426	1523.862004	
5:08:00 PM	1352.659	31.099	1383.758	1525.330281	
5:09:00 PM	1353.967	31.123	1385.09	1526.798558	
5:10:00 PM	1355.265	31.146	1386.411	1528.254709	
5:11:00 PM	1356.554	31.17	1387.724	1529.702042	
5:12:00 PM	1357.842	31.193	1389.035	1531.147171	
5:13:00 PM	1359.13	31.217	1390.347	1532.593402	
5:14:00 PM	1360.418	31.24	1391.658	1534.03853	
5:15:00 PM	1361.708	31.264	1392.972	1535.486965	
5:16:00 PM	1363.002	31.287	1394.289	1536.938708	
5:17:00 PM	1364.295	31.31	1395.605	1538.389348	
5:18:00 PM	1365.588	31.334	1396.922	1539.84109	
5:19:00 PM	1366.881	31.357	1398.238	1541.29173	
5:20:00 PM	1368.175	31.38	1399.555	1542.743472	
5:21:00 PM	1369.469	31.404	1400.873	1544.196317	
5:22:00 PM	1370.762	31.427	1402.189	1545.646957	
5:23:00 PM	1372.056	31.45	1403.506	1547.098699	
5:24:00 PM	1373.35	31.474	1404.824	1548.551543	
5:25:00 PM	1374.646	31.497	1406.143	1550.00549	97.85426
5:26:00 PM	1375.944	31.52	1407.464	1551.461642	
5:27:00 PM	1377.241	31.544	1408.785	1552.917793	
5:28:00 PM	1378.539	31.567	1410.106	1554.373945	
5:29:00 PM	1379.837	31.591	1411.428	1555.831199	
5:30:00 PM	1381.126	31.614	1412.74	1557.277429	
5:31:00 PM	1382.406	31.637	1414.043	1558.713739	
5:32:00 PM	1383.686	31.661	1415.347	1560.151152	
5:33:00 PM	1384.966	31.684	1416.65	1561.587462	

5:34:00 PM	1386.246	31.708	1417.954	1563.024874
5:35:00 PM	1387.527	31.731	1419.258	1564.462286
5:36:00 PM	1388.807	31.754	1420.561	1565.898596
5:37:00 PM	1390.088	31.777	1421.865	1567.336008
5:38:00 PM	1391.368	31.8	1423.168	1568.772318
5:39:00 PM	1392.648	31.823	1424.471	1570.208628
5:40:00 PM	1393.928	31.847	1425.775	1571.64604
5:41:00 PM	1395.206	31.87	1427.076	1573.080146
5:42:00 PM	1396.485	31.893	1428.378	1574.515353
5:43:00 PM	1397.763	31.916	1429.679	1575.949458
5:44:00 PM	1399.042	31.94	1430.982	1577.385768
5:45:00 PM	1400.335	31.963	1432.298	1578.836408
5:46:00 PM	1401.642	31.986	1433.628	1580.302481
5:47:00 PM	1402.949	32.009	1434.958	1581.768553
5:48:00 PM	1404.256	32.032	1436.288	1583.234625
5:49:00 PM	1405.563	32.055	1437.618	1584.700698
5:50:00 PM	1406.882	32.078	1438.96	1586.179998
5:51:00 PM	1408.213	32.102	1440.315	1587.673628
5:52:00 PM	1409.544	32.125	1441.669	1589.166155
5:53:00 PM	1410.874	32.148	1443.022	1590.657581
5:54:00 PM	1412.205	32.172	1444.377	1592.151211
5:55:00 PM	1413.536	32.195	1445.731	1593.643739
5:56:00 PM	1414.868	32.219	1447.087	1595.138471
5:57:00 PM	1416.199	32.242	1448.441	1596.630999
5:58:00 PM	1417.531	32.265	1449.796	1598.124629
5:59:00 PM	1418.863	32.289	1451.152	1599.619361
6:00:00 PM	1420.182	32.312	1452.494	1601.098661
6:01:00 PM	1421.489	32.335	1453.824	1602.564733
6:02:00 PM	1422.796	32.359	1455.155	1604.031908
6:03:00 PM	1424.104	32.382	1456.486	1605.499083
6:04:00 PM	1425.411	32.406	1457.817	1606.966257
6:05:00 PM	1426.723	32.43	1459.153	1608.438943
6:06:00 PM	1428.042	32.455	1460.497	1609.920448
6:07:00 PM	1429.36	32.48	1461.84	1611.40085
6:08:00 PM	1430.679	32.505	1463.184	1612.882355
6:09:00 PM	1431.997	32.53	1464.527	1614.362757
6:10:00 PM	1433.312	32.56	1465.872	1615.845364
6:11:00 PM	1434.624	32.595	1467.219	1617.330176
6:12:00 PM	1435.937	32.63	1468.567	1618.81609
6:13:00 PM	1437.249	32.665	1469.914	1620.300901
6:14:00 PM	1438.561	32.7	1471.261	1621.785713
6:15:00 PM	1439.863	32.73	1472.593	1623.25399
6:16:00 PM	1441.155	32.755	1473.91	1624.705732
6:17:00 PM	1442.447	32.78	1475.227	1626.157474
6:18:00 PM	1443.739	32.806	1476.545	1627.610319
6:19:00 PM	1445.03	32.831	1477.861	1629.060959
6:20:00 PM	1446.335	32.855	1479.19	1630.525929
6:21:00 PM	1447.652	32.879	1480.531	1632.004127
6:22:00 PM	1448.969	32.903	1481.872	1633.482324
6:23:00 PM	1450.286	32.927	1483.213	1634.960522
6:24:00 PM	1451.603	32.951	1484.554	1636.43872
6:25:00 PM	1452.903	32.974	1485.877	1637.897076
6:26:00 PM	1454.186	32.998	1487.184	1639.337795
6:27:00 PM	1455.47	33.022	1488.492	1640.779617
6:28:00 PM	1456.753	33.045	1489.798	1642.219233
6:29:00 PM	1458.036	33.069	1491.105	1643.659953
6:30:00 PM	1459.329	33.093	1492.422	1645.111695

6:31:00 PM	1460.63	33.116	1493.746	1646.571153	
6:32:00 PM	1461.931	33.14	1495.071	1648.031714	
6:33:00 PM	1463.232	33.164	1496.396	1649.492275	
6:34:00 PM	1464.534	33.187	1497.721	1650.952836	
6:35:00 PM	1465.838	33.211	1499.049	1652.416703	
6:36:00 PM	1467.144	33.235	1500.379	1653.882775	
6:37:00 PM	1468.451	33.259	1501.71	1655.34995	
6:38:00 PM	1469.757	33.283	1503.04	1656.816022	
6:39:00 PM	1471.064	33.306	1504.37	1658.282095	
6:40:00 PM	1472.371	33.33	1505.701	1659.749269	**95.28698**
6:41:00 PM	1473.68	33.354	1507.034	1661.218649	
6:42:00 PM	1474.989	33.378	1508.367	1662.688028	
6:43:00 PM	1476.297	33.401	1509.698	1664.155202	
6:44:00 PM	1477.606	33.425	1511.031	1665.624582	

KILN 2 8/26/2009
START DATE: 9:20:00 AM
END DATE: 1:05:00 PM

KILN FEED date/time	KILN FEED tonnes	LSI 2 feeder integrated tonnes	TOTAL K2 FEED TONNES	TOTAL K2 FEED US TONS	TOTAL TONS FEED PER RUN
9:20:00 AM	948.893	94.48	1043.373	1150.120492	
9:21:00 AM	950.668	94.656	1045.324	1152.271098	
9:22:00 AM	952.443	94.832	1047.275	1154.421705	
9:23:00 AM	954.218	95.008	1049.226	1156.572312	
9:24:00 AM	955.993	95.183	1051.176	1158.721817	
9:25:00 AM	957.749	95.359	1053.108	1160.851479	
9:26:00 AM	959.485	95.535	1055.02	1162.959096	
9:27:00 AM	961.222	95.71	1056.932	1165.066713	
9:28:00 AM	962.958	95.886	1058.844	1167.17433	
9:29:00 AM	964.695	96.061	1060.756	1169.281946	
9:30:00 AM	966.45	96.237	1062.687	1171.410507	
9:31:00 AM	968.224	96.413	1064.637	1173.560011	
9:32:00 AM	969.998	96.588	1066.586	1175.708414	
9:33:00 AM	971.772	96.764	1068.536	1177.857918	
9:34:00 AM	973.546	96.94	1070.486	1180.007423	
9:35:00 AM	975.311	97.116	1072.427	1182.147006	
9:36:00 AM	977.067	97.292	1074.359	1184.276669	
9:37:00 AM	978.823	97.468	1076.291	1186.406332	
9:38:00 AM	980.579	97.643	1078.222	1188.534893	
9:39:00 AM	982.335	97.819	1080.154	1190.664556	
9:40:00 AM	984.093	97.995	1082.088	1192.796423	
9:41:00 AM	985.854	98.171	1084.025	1194.931598	
9:42:00 AM	987.615	98.347	1085.962	1197.066772	
9:43:00 AM	989.376	98.523	1087.899	1199.201947	
9:44:00 AM	991.137	98.699	1089.836	1201.337121	
9:45:00 AM	992.901	98.875	1091.776	1203.475603	
9:46:00 AM	994.668	99.05	1093.718	1205.616289	
9:47:00 AM	996.434	99.226	1095.66	1207.756975	
9:48:00 AM	998.201	99.402	1097.603	1209.898763	
9:49:00 AM	999.967	99.577	1099.544	1212.038347	
9:50:00 AM	1001.713	99.751	1101.464	1214.154782	
9:51:00 AM	1003.438	99.923	1103.361	1216.245864	
9:52:00 AM	1005.163	100.095	1105.258	1218.336946	
9:53:00 AM	1006.888	100.266	1107.154	1220.426926	
9:54:00 AM	1008.613	100.438	1109.051	1222.518008	
9:55:00 AM	1010.339	100.609	1110.948	1224.60909	
9:56:00 AM	1012.065	100.781	1112.846	1226.701274	
9:57:00 AM	1013.791	100.952	1114.743	1228.792356	
9:58:00 AM	1015.518	101.123	1116.641	1230.884541	
9:59:00 AM	1017.244	101.294	1118.538	1232.975623	
10:00:00 AM	1018.897	101.459	1120.356	1234.979622	
10:01:00 AM	1020.477	101.618	1122.095	1236.896539	
10:02:00 AM	1022.057	101.777	1123.834	1238.813457	
10:03:00 AM	1023.637	101.936	1125.573	1240.730374	
10:04:00 AM	1025.216	102.095	1127.311	1242.646188	
10:05:00 AM	1026.802	102.253	1129.055	1244.568617	
10:06:00 AM	1028.395	102.411	1130.806	1246.498762	
10:07:00 AM	1029.987	102.568	1132.555	1248.426702	
10:08:00 AM	1031.58	102.726	1134.306	1250.356847	
10:09:00 AM	1033.172	102.884	1136.056	1252.285889	
10:10:00 AM	1034.769	103.042	1137.811	1254.220443	
10:11:00 AM	1036.369	103.2	1139.569	1256.158304	
10:12:00 AM	1037.969	103.358	1141.327	1258.096165	
10:13:00 AM	1039.57	103.516	1143.086	1260.035129	

10:14:00 AM	1041.17	103.674	1144.844	1261.97299	
10:15:00 AM	1042.758	103.831	1146.589	1263.896521	
10:16:00 AM	1044.335	103.989	1148.324	1265.809028	
10:17:00 AM	1045.912	104.147	1150.059	1267.721536	
10:18:00 AM	1047.489	104.305	1151.794	1269.634044	
10:19:00 AM	1049.066	104.462	1153.528	1271.54545	
10:20:00 AM	1050.651	104.62	1155.271	1273.466776	
10:21:00 AM	1052.245	104.779	1157.024	1275.399125	
10:22:00 AM	1053.838	104.937	1158.775	1277.32927	
10:23:00 AM	1055.431	105.095	1160.526	1279.259415	
10:24:00 AM	1057.024	105.253	1162.277	1281.18956	
10:25:00 AM	1058.619	105.411	1164.03	1283.121909	
10:26:00 AM	1060.217	105.568	1165.785	1285.056463	
10:27:00 AM	1061.814	105.726	1167.54	1286.991017	
10:28:00 AM	1063.412	105.884	1169.296	1288.926674	
10:29:00 AM	1065.009	106.041	1171.05	1290.860126	
10:30:00 AM	1066.604	106.199	1172.803	1292.792475	**131.94**
10:31:00 AM	1068.196	106.358	1174.554	1294.72262	
10:32:00 AM	1069.788	106.516	1176.304	1296.651662	
10:33:00 AM	1071.379	106.674	1178.053	1298.579602	
10:34:00 AM	1072.971	106.832	1179.803	1300.508645	
10:35:00 AM	1074.554	106.99	1181.544	1302.427767	
10:36:00 AM	1076.128	107.148	1183.276	1304.336968	
10:37:00 AM	1077.702	107.306	1185.008	1306.246168	
10:38:00 AM	1079.276	107.464	1186.74	1308.155369	
10:39:00 AM	1080.85	107.621	1188.471	1310.063468	
10:40:00 AM	1082.431	107.779	1190.21	1311.980385	
10:41:00 AM	1084.019	107.936	1191.955	1313.903916	
10:42:00 AM	1085.607	108.094	1193.701	1315.828549	
10:43:00 AM	1087.195	108.251	1195.446	1317.75208	
10:44:00 AM	1088.783	108.409	1197.192	1319.676714	
10:45:00 AM	1090.375	108.515	1198.89	1321.548436	
10:46:00 AM	1091.972	108.571	1200.543	1323.370554	
10:47:00 AM	1093.57	108.626	1202.196	1325.192673	
10:48:00 AM	1095.167	108.681	1203.848	1327.013689	
10:49:00 AM	1096.764	108.737	1205.501	1328.835807	
10:50:00 AM	1098.36	108.81	1207.17	1330.675563	
10:51:00 AM	1099.955	108.903	1208.858	1332.536262	
10:52:00 AM	1101.55	108.995	1210.545	1334.395859	
10:53:00 AM	1103.145	109.087	1212.232	1336.255456	
10:54:00 AM	1104.74	109.179	1213.919	1338.115053	
10:55:00 AM	1106.34	109.306	1215.646	1340.018742	
10:56:00 AM	1107.944	109.466	1217.41	1341.963217	
10:57:00 AM	1109.548	109.627	1219.175	1343.908794	
10:58:00 AM	1111.152	109.787	1220.939	1345.853269	
10:59:00 AM	1112.757	109.948	1222.705	1347.799949	
11:00:00 AM	1114.378	110.109	1224.487	1349.764265	
11:01:00 AM	1116.016	110.271	1226.287	1351.748423	
11:02:00 AM	1117.654	110.433	1228.087	1353.732581	
11:03:00 AM	1119.292	110.595	1229.887	1355.716739	
11:04:00 AM	1120.93	110.757	1231.687	1357.700897	
11:05:00 AM	1122.57	110.919	1233.489	1359.68726	
11:06:00 AM	1124.21	111.082	1235.292	1361.674725	
11:07:00 AM	1125.851	111.244	1237.095	1363.662189	
11:08:00 AM	1127.492	111.407	1238.899	1365.650757	
11:09:00 AM	1129.132	111.569	1240.701	1367.637119	
11:10:00 AM	1130.784	111.734	1242.518	1369.640017	
11:11:00 AM	1132.448	111.901	1244.349	1371.658346	
11:12:00 AM	1134.111	112.068	1246.179	1373.675573	
11:13:00 AM	1135.775	112.236	1248.011	1375.695005	
11:14:00 AM	1137.438	112.403	1249.841	1377.712233	

11:15:00 AM	1139.11	112.571	1251.681	1379.740483	
11:16:00 AM	1140.79	112.739	1253.529	1381.777552	
11:17:00 AM	1142.47	112.907	1255.377	1383.814621	
11:18:00 AM	1144.15	113.075	1257.225	1385.85169	
11:19:00 AM	1145.83	113.243	1259.073	1387.888759	
11:20:00 AM	1147.531	113.413	1260.944	1389.951181	
11:21:00 AM	1149.254	113.585	1262.839	1392.040058	
11:22:00 AM	1150.976	113.756	1264.732	1394.126731	
11:23:00 AM	1152.699	113.928	1266.627	1396.215608	
11:24:00 AM	1154.421	114.099	1268.52	1398.302281	
11:25:00 AM	1156.171	114.273	1270.444	1400.423126	
11:26:00 AM	1157.948	114.448	1272.396	1402.574835	
11:27:00 AM	1159.725	114.624	1274.349	1404.727646	
11:28:00 AM	1161.501	114.8	1276.301	1406.879355	
11:29:00 AM	1163.278	114.976	1278.254	1409.032167	
11:30:00 AM	1165.06	115.151	1280.211	1411.189387	
11:31:00 AM	1166.846	115.327	1282.173	1413.35212	
11:32:00 AM	1168.632	115.503	1284.135	1415.514852	
11:33:00 AM	1170.418	115.679	1286.097	1417.677584	
11:34:00 AM	1172.204	115.855	1288.059	1419.840316	
11:35:00 AM	1173.976	116.03	1290.006	1421.986514	
11:36:00 AM	1175.734	116.206	1291.94	1424.118381	
11:37:00 AM	1177.492	116.381	1293.873	1426.249147	
11:38:00 AM	1179.251	116.556	1295.807	1428.381014	
11:39:00 AM	1181.009	116.732	1297.741	1430.512882	
11:40:00 AM	1182.773	116.907	1299.68	1432.650261	
11:41:00 AM	1184.542	117.083	1301.625	1434.794254	
11:42:00 AM	1186.312	117.259	1303.571	1436.939349	
11:43:00 AM	1188.081	117.434	1305.515	1439.08224	
11:44:00 AM	1189.851	117.61	1307.461	1441.227335	
11:45:00 AM	1191.612	117.786	1309.398	1443.362509	**131.382**
11:46:00 AM	1193.366	117.962	1311.328	1445.489968	
11:47:00 AM	1195.119	118.137	1313.256	1447.615221	
11:48:00 AM	1196.873	118.313	1315.186	1449.74268	
11:49:00 AM	1198.626	118.489	1317.115	1451.869036	
11:50:00 AM	1200.379	118.664	1319.043	1453.994289	
11:51:00 AM	1202.129	118.84	1320.969	1456.117338	
11:52:00 AM	1203.88	119.016	1322.896	1458.24149	
11:53:00 AM	1205.631	119.192	1324.823	1460.365641	
11:54:00 AM	1207.382	119.367	1326.749	1462.48869	
11:55:00 AM	1209.134	119.543	1328.677	1464.613944	
11:56:00 AM	1210.888	119.718	1330.606	1466.7403	
11:57:00 AM	1212.641	119.894	1332.535	1468.866656	
11:58:00 AM	1214.395	120.069	1334.464	1470.993012	
11:59:00 AM	1216.148	120.245	1336.393	1473.119368	
12:00:00 PM	1217.903	120.421	1338.324	1475.247928	
12:01:00 PM	1219.658	120.597	1340.255	1477.376489	
12:02:00 PM	1221.413	120.773	1342.186	1479.50505	
12:03:00 PM	1223.168	120.95	1344.118	1481.634713	
12:04:00 PM	1224.923	121.126	1346.049	1483.763273	
12:05:00 PM	1226.705	121.302	1348.007	1485.921596	
12:06:00 PM	1228.514	121.477	1349.991	1488.108579	
12:07:00 PM	1230.322	121.652	1351.974	1490.29446	
12:08:00 PM	1232.131	121.827	1353.958	1492.481443	
12:09:00 PM	1233.939	122.002	1355.941	1494.667324	
12:10:00 PM	1235.72	122.178	1357.898	1496.824544	
12:11:00 PM	1237.474	122.354	1359.828	1498.952003	
12:12:00 PM	1239.227	122.529	1361.756	1501.077256	
12:13:00 PM	1240.98	122.705	1363.685	1503.203612	
12:14:00 PM	1242.734	122.881	1365.615	1505.331071	
12:15:00 PM	1244.492	123.057	1367.549	1507.462938	

12:16:00 PM	1246.254	123.232	1369.486	1509.598113	
12:17:00 PM	1248.016	123.408	1371.424	1511.734389	
12:18:00 PM	1249.777	123.583	1373.36	1513.868462	
12:19:00 PM	1251.539	123.759	1375.298	1516.004738	
12:20:00 PM	1253.309	123.935	1377.244	1518.149834	
12:21:00 PM	1255.087	124.11	1379.197	1520.302045	
12:22:00 PM	1256.864	124.286	1381.15	1522.455457	
12:23:00 PM	1258.642	124.462	1383.104	1524.60937	
12:24:00 PM	1260.419	124.638	1385.057	1526.762182	
12:25:00 PM	1262.186	124.813	1386.999	1528.902868	
12:26:00 PM	1263.941	124.989	1388.93	1531.031428	
12:27:00 PM	1265.696	125.165	1390.861	1533.159989	
12:28:00 PM	1267.452	125.34	1392.792	1535.28855	
12:29:00 PM	1269.207	125.516	1394.723	1537.41711	
12:30:00 PM	1270.973	125.691	1396.664	1539.556694	
12:31:00 PM	1272.751	125.867	1398.618	1541.710608	
12:32:00 PM	1274.528	126.043	1400.571	1543.863419	
12:33:00 PM	1276.306	126.218	1402.524	1546.01623	
12:34:00 PM	1278.083	126.394	1404.477	1548.169042	
12:35:00 PM	1279.856	126.57	1406.426	1550.317444	
12:36:00 PM	1281.624	126.745	1408.369	1552.459232	
12:37:00 PM	1283.392	126.921	1410.313	1554.602123	
12:38:00 PM	1285.16	127.097	1412.257	1556.745014	
12:39:00 PM	1286.928	127.273	1414.201	1558.887904	
12:40:00 PM	1288.686	127.449	1416.135	1561.019772	
12:41:00 PM	1290.434	127.624	1418.058	1563.139514	
12:42:00 PM	1292.182	127.8	1419.982	1565.260358	
12:43:00 PM	1293.93	127.975	1421.905	1567.380101	
12:44:00 PM	1295.678	128.151	1423.829	1569.500945	
12:45:00 PM	1297.43	128.326	1425.756	1571.625096	
12:46:00 PM	1299.185	128.502	1427.687	1573.753657	
12:47:00 PM	1300.941	128.678	1429.619	1575.88332	
12:48:00 PM	1302.697	128.854	1431.551	1578.012983	
12:49:00 PM	1304.452	129.029	1433.481	1580.140441	
12:50:00 PM	1306.209	129.205	1435.414	1582.271206	
12:51:00 PM	1307.967	129.381	1437.348	1584.403074	
12:52:00 PM	1309.724	129.557	1439.281	1586.533839	
12:53:00 PM	1311.482	129.733	1441.215	1588.665707	
12:54:00 PM	1313.239	129.909	1443.148	1590.796472	
12:55:00 PM	1314.986	130.085	1445.071	1592.916214	
12:56:00 PM	1316.722	130.26	1446.982	1595.022728	
12:57:00 PM	1318.458	130.436	1448.894	1597.130345	
12:58:00 PM	1320.193	130.611	1450.804	1599.235757	
12:59:00 PM	1321.929	130.787	1452.716	1601.343374	
1:00:00 PM	1323.671	130.963	1454.634	1603.457605	**138.84**
1:01:00 PM	1325.418	131.138	1456.556	1605.576244	
1:02:00 PM	1327.166	131.314	1458.48	1607.697089	
1:03:00 PM	1328.913	131.49	1460.403	1609.816831	
1:04:00 PM	1330.661	131.666	1462.327	1611.937675	