AZD 074 452 426
3A

INSPECTION REPORT
U.S. ENVIRONMENTAL PROTECTION AGENCY
REGION 9
TOXICS AND WASTE MANAGEMENT DIVISION
WASTE COMPLIANCE BRANCH

Purpose: RCRA CEI Investigation

Facility: Salt River Project
Navajo Generating Station
Navajo Nation
Page, Arizona 86040

EPA ID Number: AZD074|455|2426

Report Number: E(88)I102

Date of Investigation: November 14-15, 1988

EPA Investigators: William J. Weis III
Environmental Scientist
(415) 974-9811

Donn Zuroski
Geologist
(415) 974-8591

Pierre Belanger
Environmental Scientist
(415) 974-8549

Navajo Nation Representatives: Patrick Antonio, Acting Director
Environmental Protection Administration
(602) 871-6617,8,9

Arlene Luther
Environmental Specialist
(602) 871-6617,8,9

Facility Representatives: Harold C. Voepel
Plant Manager
(602) 645-8811 Ext. 212

Jerre Blecha
Superintendent of Support Services
(602) 645-8811 Ext. 474

Craig Hiserote
Chemical Supervisor
(602) 645-8811 Ext. 322

Ron F. Chapman
Purchasing and Stores Supervisor
(602) 645-8811 Ext. 537

Greg Witherspoon
Environmental Service Dept.
(602) 236-2717

Report Prepared By: William J. Weis III

INTRODUCTION

The Salt River Project Navajo Generation Station is located in Northern Arizona on the Navajo Indian Reservation, approximately 3 miles East of Page, Arizona. This facility operates three coal-fired, 800 megawatt, electrical generators.

The Navajo Generating Station, NGS, is a non-notifier TSD facility. On at least four different occasions, NGS has disposed of liquid wastes from the facility's Bearing Cooling Water Systems (BCW Systems) into an on-site surface impoundment. The volume of each BCW System is approximately 1.5 million gallons of liquid coolant/corrosion inhibitor containing chromium (D007). Based on 23 analyses supplied by the facility (Appendix I and Attachment 9), the concentration of chromate in the liquid coolant ranged between 297 and 800 mg/l.* Solid wastes with concentrations of chromium in excess of 5.0 mg/l are federal hazardous waste.

NGS is also a large quantity generator of mercury, F001, F003, F005, D001, and D002 wastes.

Chronology of Events At Navajo Generating Station

1) In 1974, the NGS Electrical Generator Unit No 1 was started up. Between 1974 and 1976, NGS utilized a non-hazardous boron nitrate compound to inhibit corrosion in the BCW System. In 1976 NGS substituted the boron nitrate compound with sodium bichromate. This compound has been used ever since.

2) In 1975, the NGS Electrical Generator Unit No 2 was started up. Boron nitrate compound was used to inhibit corrosion in this Generator's Bearing Cooling Water System for approximately one year. Since then, sodium bichromate has been used.

3) In 1976, the NGS Electrical Generator Unit No 3 was started up. Sodium bichromate has been used as a corrosion inhibitor since the start up of this unit.

* Note: To convert mg/l of chromate (CrO_4) to mg/l chromium (Cr), multiply the chromate concentration by 44.83 %.

4) On August 3, 1980, Salt River Project (SRP) submitted to the EPA a Hazardous Waste Notification listing their NGS facility as a hazardous waste generator and a TSD (Attachment 3, page 5). The NGS Hazardous Waste Notification lists Characteristic Waste (D000). The Supporting document to the NGS Notification (Attachment 3, page 3) identified their D000 waste as NALCO 8320, a sodium bichromate compound.

5) On November 18, 1980, SRP submitted to the EPA a request to delist their Navajo Generating Plant as a TSD (Attachment 4). In support of this request, SRP submitted the attached document entitled Data Summary (Attachment 4 page, 2). SRP stated that this document contains the details of SRP's investigation of the waste inventories at each of their facilities. SRP stated that their investigation revealed that "in all instances, insufficient quantities of hazardous waste were handled to require SRP to file a permit application for its facilities". The SRP Data Summary sent to the EPA did not correctly describe the Hazardous Waste Stream at NGS for the following reasons:

A) The SRP Data Summary did not list the coolant which contains sodium bichromate, as a possible waste substance and,

B) The SRP Data Summary did not list the Unit 1, 2, and 3 BCW Systems as possible waste source. It should be noted that at the time the Data Summary was prepared, a combined quantity of 4.5 million gallons of cooling water containing sodium bichromate was in use in the Unit 1, 2, and 3 BCW Systems.

6) On January 15, 1982, NGS discharged approximately 1.5 million gallons of waste cooling water (D007) from the Unit 2 BCW System (Attachment 6). The discharged D007 waste coolant flowed from the Unit 2 BCW storage tank (Photograph 7), through a concrete lined channel*, through an unlined earthen ditch (photograph 6), through an underground pipe, and into surface impoundment S-14 (Photograph 8 and Attachment 23).

* Photographs 3-6 depict the concrete lined channel for Unit 3. This channel is identical in design to the lined channels for Units 1 and 2.

7) On February 3, 1982, NGS discharged approximately 1.5 million gallons of D007 waste coolant from the Unit 1 BCW System (Attachment 6 and Photograph 7). The discharged D007 waste flowed along the same pathway as the aforementioned Unit 2 discharge.

8) On October 7, 1983 NGS requested EPA to amend their large quantity generator status to that of a small quantity generator status (Attachment 5). SRP stated that the Arizona Department of Health Services (ADHS) had inspected their facility (Attachment 5, page 2-3) and that ADHS had determined that NGS was a Small Quantity Generator. According to the ADHS inspection, SRP furnished them with a copy of the SRP Data Summary (Attachment 4, page 2). This is the same document sent to the EPA in 1980. The SRP Data Summary sent to the ADHS did not correctly describe the hazardous Waste situation at NGS for the following reasons:

A) It failed to list as a possible waste substance the 4.5 million gallons of BCW System coolant containing sodium bichromate (D007);

B) It failed to list the BCW system as a possible waste source;

C) It failed to inform the state of the NGS 1982 discharge of approximately 3 millon gallons of D007 coolant waste from the Unit 1 and 2 BCW systems.

9) On January 26, 1985, NGS discharged approximately 1.5 million gallons of D007 waste coolant water from the Unit 2 BCW System (Attachment 6). The discharged D007 waste flowed from the Unit 2 BCW storage tank along the same pathway as the January 15, 1982 Unit 2 discharge.

10) On April 9, 1988, NGS discharged approximately 1.5 million gallons of D007 waste cooling water from the Unit 2 BCW System (Attachment 6). The discharged D007 waste flowed from the Unit 2 BCW storage tank along the same pathway as the January 26, 1985 Unit 2 discharge.

11) On July 7, 1988, SRP notified the EPA as a large quantity generator (Attachment 7). SRP did not complete the Treat, Store, Dispose (TSD) category in Section VI-3. By the date of this submission, however, NGS had been a TSD for over five years and had disposed of approximately 6 million gallons of D007 wastes.

INVESTIGATION

Bearing Cooling Water System

Each of the three NGS electricity generating units is provided with a separate Bearing Cooling Water System (BCWS). The BCW system at each unit removes heat from plant equipment such as the station chillers, vacuum pumps, hydrogen coolers, and boiler feed pumps. The BCWS then rejects the heat to the main circulating water cooling system. Each BCWS consists of a 53,000 gallon storage tank (Photographs 3-4), numerous equipment water jackets, and related piping. The total liquid capacity of each BCWS is approximately 1.5 millon gallons of cooling water.

According to the Chemical Supervisor, when the BCW system is initially started up, the system is filled with condensate grade water and sufficient sodium bichromate to reach an operating level between 300-500 ppm of chromate in the cooling water (See Attachment 15 for the Material Safety Data Sheet for sodium bichromate). The sodium bichromate is added in order to maintain a low corrosion rate and inhibit microbial growth. Each BCW system is sampled and analyzed for hexavalent chromium* at an interval of approximately every three days. During the inspection, twenty-three such laboratory analyses (Attachment 9) were requested for the years 1982-1988. The chromium concentration expressed as chromate ranged between 297 and 800 mg/l (Appendix I).

Periodically the entire volume of the 1.5 million gallons of cooling water in the BCWS is drained. This is done so that maintenance, such as repainting the interior of a tank, can be performed on the system. According to the NGS Chemical Supervisor, when the BCW system is drained, the strength of the concentration of chromate in the cooling water will vary but remains within the operating parameters of 300-500 mg/l chromate. The laboratory analyses of cooling water samples obtained just prior to draining of a BCW System verified this range of chromate (Appendix I).

* The analytical method used by NGS was taken from Standard Methods For the Examination of Water and Wastewater, 15th. Edition, 1980, Analytical Method 312 B, page 187 (Attachment 24). This analytical method is equivalent to the EPA Test Methods For Evaluating Solid Wastes, Volume 1A, Method 7196 (Attachment 25).

The facility did not maintain an operating record of the movement of hazardous waste at the facility and could not furnish the exact number of times or dates that any of the BCW systems were drained of their cooling water. When asked about the frequency that each BCWS was drained, the various NGS facility representatives could not reach a consensus. One facility supervisor stated that the three BCW systems were drained approximately once every two years, another supervisor stated that draining a BCWS was somewhat a rare event.

Utilizing a facility computer program, PANVALET, the NGS was able to produce a computer generated record showing that the BCWS was drained at least four times since 1982 (Attachment 6). The PANVALET program, uses information which dates back to 1982 and tracks man hours charges against various plant activities. According to this record, the facility representatives indicated that they were reasonably sure that the BCW systems were drained as follows:

Unit 2 drained on 01-15-82
Unit 1 drained on 02-03-82
Unit 2 drained on 01-26-85
Unit 2 drained on 03-09-88

The facility Chemical Supervisor was requested to supply information about all the NGS surface impoundments. This information included their history, function, size, and flow directions. On November 11, 1988, NGS telecopied to the EPA a memo which included a description of the use of chromates and their flow through the system (Attachment 8). According to this SRP submission, a full description of the NGS water reclamation system will be forwarded when this report is completed.

Hazardous Waste Storage

NGS has never notified as a TSD storage facility although, review of records for 1985-1987 indicated that NGS has stored wastes in containers over 90 days. For the time period beteen 10-10-85 and 2-18-86 NGS stored 34 drums approximately 131 days. This was determined by comparing the chain of custody record (Attachment 18, page 9) and the manifest dates (Attachment 19).

NGS 1988 records (Attachment 20) for drummed waste indicate that containers from the facility central storage area and the accumulation areas (Photographs 19-25) are currently being stored for less than 90 days.

The eye wash equipment in the NGS Central Storage Area was inoperable. The drain plug at the base of the manifold was missing (Photograph 20). Without the drain plug, the pressurized water cannot flow up to the face and eyes as this equipment is designed to do. NGS corrected this problem the same day.

Waste Oil

NGS collects used oil for recycling (Photograph 26). Requested laboratory analyses (Attachment 12 and 13) indicate that the used oil is not being contaminated with hazardous waste constituents.

Environmental Samples

Nine environmental samples were collected at NGS for analysis of heavy metals and solvents. Results of the analyses are pending.

POTENTIAL VIOLATIONS

40 CFR 270.10(f) & Section 3005(a) RCRA

Since January 15, 1982, NGS operated a new facility without submitting Parts A and B of the permit application and without receiving a finally effective RCRA permit. On at least four separate occasions since January 1982, Navajo Generating Station has disposed of D007 Hazardous Waste from the NGS Bearing Cooling Water Systems onto land and into a surface impoundment (Attachment 6). The disposal dates are as follows:

1) The Unit 2 BCWS drained on 01-15-82
2) The Unit 1 BCWS drained on 02-03-82
3) The Unit 2 BCWS drained on 01-26-85
3) The Unit 2 BCWS drained on 03-09-88.

The documents listed below substantiate that SRP personnel had relevant knowledge of various federal requirements and prohibitions pertaining to hazardous waste:

1) The previous SRP Notifications of Hazardous Waste Activity to the EPA (Attachments 3 and 7) indicate that NGS had knowledge of federal regulations governing notification and permitting requirements.

2) The Material Safety Data Sheet for NALCO 8320 Corrosion Inhibitor which was on file at the facility (Attachment 15, page 6) indicates that NGS had knowledge that waste NALCO 8320 "meets the criteria of a hazardous waste as defined under RCRA CFR 261".

3) The Nalco Chemical Company Letter to NGS on June 29, 1988 (Attachment 14) indicates that NGS had knowledge that Nalco 8320, was a hazardous material. The NGS Supply record, November 15, 1988, (Attachment 21) indicates that NGS purchased and utilized NALCO 8320 as follows:

Year	No. drums	Gallons	Pounds
1986	9	270	3825
1987	6	180	2550
1988	6	180	2550

POTENTIAL VIOLATIONS (CONTINUED)

4) The September 19, 1988 SRP Memo from Gregg Elliott to Kent Price containing a statistical analysis of the EP Tox data for chromium and other chemicals (Attachment 11) and the September 19, 1988 Laboratory analytical results of the crystallized solid waste (Attachment 10) indicate that NGS had knowledge that solid waste exhibiting chromium levels in excess of 5 mg/l are a hazardous waste. This report references the Maximum Concentration of Contaminants for Characteristic of EP Toxicity, 5mg/l, as set forth in §40 CFR 261.24.

5) The facility laboratory analyses of chromate for the BCW Systems ranged between 277 and 800 mg/l (Attachment 9 and Table I). These analytical results indicate that NGS had knowledge that the BCW System's cooling water exceeded the Maximum Concentration of Contaminants for Characteristic of EP Toxicity, 5mg/l as set forth in §40 CFR 261.24.

§40 CFR 262.34 The NGS Central Storage Area exceeded the 90 day limit for on-site storage of Hazardous Waste without having obtained a permit or interim status.

§40 CFR 262.34 (a)(4) The facility failed to comply with the following requirements for owners or operators:

1) §40 CFR 265.16 (d). The facility Training Record failed to include for each Hazardous Waste position the following:

1) The job title
2) The job description
3) The description of required Hazardous Waste training
4) The documentation that Hazardous Waste training or experience was completed.

POTENTIAL VIOLATIONS (CONTINUED)

2) §40 CFR 265.31. On at least four separate occasions, NGS caused a release of Hazardous Waste (D007) through an unlined channel which threatened human health and the environment. These four occasions were:

1) January 15, 1982
2) February 3, 1982
3) January 26, 1982
4) March 3, 1988.

3) §40 CFR 265.32 (a). The NGS Central Storage Area was not provided with an alarm system.

4) §40 CFR 265.33. The emergency eye wash system in the NGS Central Storage Area was not tested. During the inspection this piece of equipment was found to be inoperable. It was immediately repaired.

Section 3010 RCRA

The NGS Notification of Hazardous Waste of RCRA Activity was incomplete. The Notifications (Attachments 3 and 7) failed to identify chromium and the various hazardous wastes listed in the facility's annual report (Attachment 20 and Appendix II).

APPENDIX I

Summary of twenty-three chromate analysis reports of the Bearing Cooling Water System for years 1983-1988 (Attachment 9).

Date	BCWS Unit NO.	NGS Analysis CrO_4 mg/l)	equivalent amount of Cr mg/l*	EPA Toxicity limit Cr mg/l
10-25-88	2	476	213.4	5
10-25-88	3	459	205.8	5
04-12-88	1	436	195.5	5
03-08-88	2	537 #	240.7	5
02-12-88	3	467	209.4	5
02-10-87	1	335	150.2	5
04-06-87	2	496	222.4	5
04-07-87	3	491	220.1	5
04-01-86	1	497	222.8	5
04-09-86	2	512	229.5	5
04-13-86	3	800	358.6	5
02-22-85	2	460 **#	206.2	5
04-16-85	1	350	156.9	5
04-16-85	2	297	133.1	5
03-26-85	3	500	224.1	5
04-03-84	1	393	176.2	5
03-20-84	2	400	179.3	5
04-03-84	3	518	232.2	5
04-12-83	1	620	277.9	5
04-12-83	2	760	340.7	5
04-19-83	3	705	316.1	5
01-11-82	2	411**#	184.3	5
02-02-82	1	362**#	162.3	5

* Note: To convert mg/l of chromate (CrO_4)to mg/l chromium (Cr), multiply the chromate concentration by 44.83 %.

** Data was reported to William Weis by Craig Hiserote by telecomunication on 12-21-88.

\# Denotes the BCWS cooling water chromate concentration present just prior to being discharged into the surface impoundment via the earthen channel.

APPENDIX II

Hazardous Wastes Listed in the NGS 1987 Annual Hazardous Waste Report

Ep Toxic oil sludge, arsenic	D004
Spent non-halogenated solvents liquids	F001, F003, F005
Spent non-halogenated solvent paint sludge	F003, F005
Spent non-halogenated solvents grease	F003, F005
Mercury	D009
Spent non-halogenated solvent paint liquid	F003, F005
Spent halogenated and non-halogenated solvent oil-liquid	F001, F003, F005
35000 ppm TCE, TCA, and toluene	
Spent non-halogenated solvent paint sludge	F003, F005
Waste ignitable liquid	D001
Spent non-halogenated solvent paint liquid	F003, F005
Waste corrosive liquid	D002

ATTACHMENTS

1) Photographs

2) Checklists

3) August 13, 1980 EPA Notification of Hazardous Waste Activity as a generator and a TSD with attachment: Description of Six Salt River Project Waste Management Activities

4) November 18, 1980 letter from SRP to Bill Wilson asking EPA to be delisted as a TSD with Attachment: Data Summary

5) October 7, 1983 letter from SRP to Bill Wilson requesting reducing generator status from large quantity generator to small quantity generator with Attachment: July 28, 1983 Arizona Department Of Health Services (ADHS) Generator Inspection Report

6) November 15, 1988 PANVALET computer read-out showing the BCWS was drained four times since 1982:

   Unit 1 drained on 02-03-82
   Unit 2 drained on 01-15-82
   Unit 2 drained on 01-26-85
   Unit 2 drained on 03-09-88

7) July 18, 1988 SRP letter to EPA with revised EPA Notification of Hazardous Waste Activity as a generator only

8) November 18, 1988 letter from SRP to William J. Weis describing their bearing cooling water system and ponds

9) Navajo Generating Station daily log report listing 23 laboratory analysis of the chromium levels in the Bearing Cooling Water System

10) September 19, 1988 Laboratory analyses results of the crystallized solid waste

11) September 23, 1988 SRP Memo from Gregg Elliott to Kent Price containing a statistical analysis of the EP Tox data for Chromium and other chemicals

12) October 2, 1987 Laboratory analyses report for Waste oil

13) July 25, 1988 Laboratory analyses report for Waste oil

14) June 29, 1988 leter to SRP from Nalco Chemical Company recommending that Nalco 8320 be replaced with a Sure-Cool 1355

ATTACHMENTS (CONTINUED)

15) Material Safety Data Sheet for Nalco 8320 Corrosion Inhibitor, an aqueous solution of sodium bichromate

16) Material Safety Data Sheet for Sure-Cool 1355 Inhibitor, an aqueous solution of borate, silicate, nitrate, and nitrite

17) July 1988 Summary of hazardous waste accumulation, disposal, and recycling

18) January 7, 1986 Drum Sampling And Analyses Investigation, Phase 2, Navajo Generating Station, Page, Arizona Job No. 2175J235. Note that these samples were collected from drums on October 10, 1986.

19) Uniform Hazardous Waste Manifest No 10686. This manifest lists 8,394 pounds (3802.5 kg.) of hazardous waste being transported to Chemical Waste Management, Inc. on February 18, 1986. Note that these drums were mentioned in Attachment 15 as on-site on October 10, 1986.

20) 1987 Annual Hazardous Waste Report: March 2, 1988 SRP Memo from Harold Voepel, Navajo Generating Station Plant Manager to David Sultana, Sr. Staff Scientist, Environmental Services

21) November 15, 1988 computer read-out listing the amount of Chromate (Nalco 8320) used between 1986-1988 at Navajo Generating Station

22) Hazardous Waste Emergency Contingency Plan

23) Aerial Photograph of Navajo Generating Station

24) Standard Methods For the Examination of Water and Wastewater, 15th. Edition, 1980, Analytical Method 312 B, page 187

25) EPA Test Methods For Evaluating Solid Wastes, Volume 1A, Method 7196.

SALT RIVER PROJECT

NAVAJO GENERATING STATION
POST OFFICE BOX W
PAGE, AZ 86040
(602) 645-8811

ENG 0014

April 4, 1989

Mr. William J. Weis, III
Environmental Agency
215 Fremont Street T-3-2
San Francisco, California 94105

Dear Mr. Weis:

During your visit of November 15, 1988 to the Navajo Generating Station, you were given the approximate volume of the three bearing cooling water systems. The volumes you were given were estimates and were in error. The actual volumes, as reported by the designers of the station, were much less than the estimates we gave you. The total volume of each of the three systems is 87,380 gallons. The volume of each of the three bearing cooling water tanks is 52,727 gallons, and the remainder of the total volumes is in the piping systems and heat exchangers.

Sincerely,

H. C. Voepel
Plant Manager

HCV/dm

SALT RIVER PROJECT

NAVAJO GENERATING STATION
POST OFFICE BOX W
PAGE, AZ 86040
(602) 645-8811

November 17, 1988

William J. Weis III, Environmental Scientist
U. S. Environmental Protection Agency
215 Fremont Street T-3-2
San Francisco, CA 94105

Dear Mr. Weis:

We, at The Navajo Generating Station, are committed to responsible management of our water resources and wastes. We are a zero discharge plant. It is our practice to reclaim water at every opportunity. None of the water in our systems re-enters the environment except through atmospheric evaporation. Since the plant was started up we have improved our performance in water management wherever feasible. As you saw during your visit with us, we aren't done yet, there are still opportunities to improve our performance in these areas and we are actively pursuing them.

A full description of the Navajo Generating Station water reclamation system as it was on November 15, 1988 will be forwarded to you, per your request, when it is completed. In the meantime, the following description is presented showing our use of chromate and its flow through the system. This is presented to you for your use in evaluating the "possible violation" you discussed with us during the exit meeting of your visit.

It is our position that only one waste is produced by the system that receives the chromate. This waste is salt in solid form that is produced by the crystallizer. Results of analysis indicate that this salt is not a hazardous waste. We believe there was no violation.

Refer to the attached schematic of the system.

The bearing cooling water system is designed to remove heat from plant equipment such as lube oil systems and compressors and reject it to the main circulating water system. It is a closed system, its water doesn't mingle with waters of other systems except when it is drained. There is one 52,727 gallon bearing cooling water tank for each main generating unit (three tanks total). The water in this system is condensate with chromate in the range of concentration of 300 to 500 ppm used as the corrosion inhibitor. This system is never drained except when maintenance of the system is necessary.

Collection pond S13 receives bearing cooling water when one of the tanks is drained. S13 is a 36 acre-ft pond which is lined with a single layer of high density polyethylene, 100 mils thick. This pond is designed to receive several flows including rain runoff and unit three cooling tower overflow as well as bearing cooling water.

Water collected by gravity flow in S13 is pumped to collection and storage ponds 60-1A and 60-1B, which are at higher elevation. These ponds are 150 acre-ft total and are lined with a single layer of high density polyethylene, 100 mils thick. These ponds are designed to receive several flows including main circulating water system blowdown and ash system overflow as well as water pumped from S13. These ponds are intended to collect and store water for feed to the brine concentrators.

The reason these ponds are required is that the brine concentrators total capacity is 1400 gallons per minute. In normal steady state plant operation, the brine concentrators have slightly more than adequate capacity to process all circulating water system blowdown and ash system overflow. But during special situations such as maintenance periods or abnormal operation the capacity of the brine concentrators may not be adequate, hence the requirement to store the water until normal operation resumes, when the slightly excess brine concentrator capacity will be available to process the stored water.

Water from 60-1A and 60-1B is pumped to the brine concentrators, BC1, BC2, and BC3. This water is distilled, with heat added through a vapor compression process, in the brine concentrators. The products of the brine concentrators are brine and condensate. The condensate is of such high quality that it is used directly, with no other processing, as boiler water make-up.

The brine produced by the brine concentrators then flows to the crystallizer. Using a process similar to that of the brine concentrators, the crystallizer finishes the recovery of water from the brine. The products of the crystallizer are solid salt and condensate. The condensate produced by the crystallizer is high quality and this product is used with no further processing as plant make-up.

Crystallizer capacity is 90 gallons per minute. This capacity is slightly more than is necessary to process all the brine when plant operation is normal. Ponds 35-1 and 35-2 are designed to collect and store brine during maintenance periods and abnormal operation. These ponds are 30 acre-ft total and are lined with a single layer of high density polyethylene, 100 mils thick. The brine is then returned to the process when operation is returned to normal, and the slightly excess capacity is available to process the stored brine.

The solid salt from the crystallizer is stored in a solid waste disposal facility which is similar in structure to the ponds and is lined with high density polyethylene, 100 mils thick. An analysis of this solid waste was provided to you during your visit. According to that analysis the material was not classified as a hazardous waste by the EP toxicity evaluation, despite the concentration of chromium that was present according to the elemental analysis.

As you can see, throughout the process described above there is no waste product at any point in the process except the final solid product produced by the crystallizer. All of the water described is either being used or stored for use.

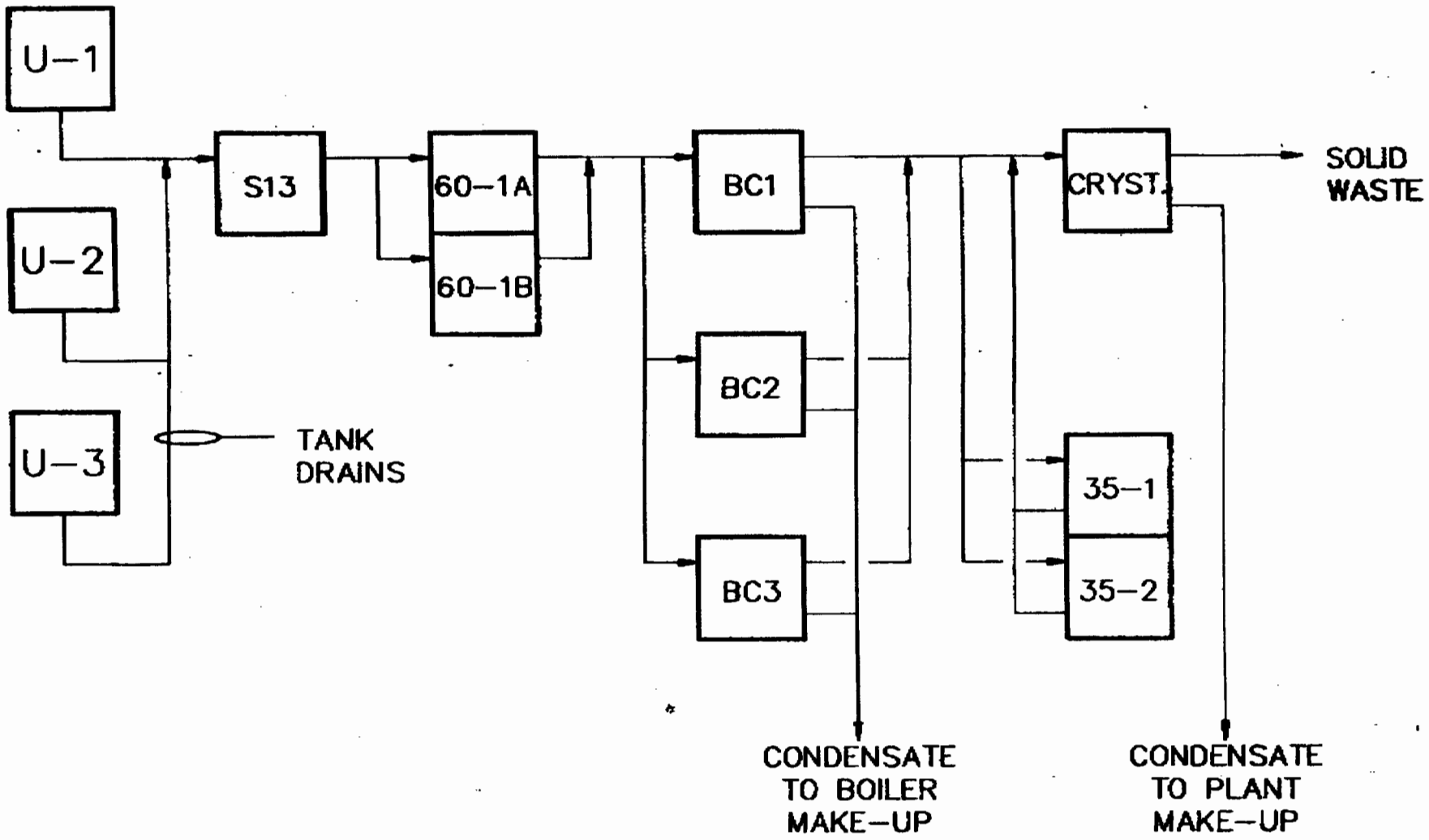
U-1
U-2
U-3
S13
60-1A
60-1B
BC1
BC2
BC3
CRYST.
35-1
35-2
TANK DRAINS
SOLID WASTE
CONDENSATE TO BOILER MAKE-UP
CONDENSATE TO PLANT MAKE-UP

Ponds S13, 60-1A, 60-1B, 35-1, and 35-2 were designed for collection and storage of water for further use, not for solar evaporation of waste.

If you have any further questions or discussion about our system please do not hesitate to contact me.

Sincerely,

John Weiss for

H. C. Voepel
Plant Manager

SALT RIVER PROJECT

NAVAJO GENERATING STATION
POST OFFICE BOX W
PAGE, AZ 86040
(602) 645-8811

January 6, 1988

Mr. William J. Weis, III
Environmental Scientist
U. S. Environmental Protection Agency
215 Fremont Street, T-3-2
San Francisco, CA 94105

Dear Mr. Weis:

Shortly after your visit to Navajo Generating Station, we sent to you a brief description of our water management program that included a schematic representation of how chromate would progress through the system if we were to drain one of our bearing cooling water systems.

You requested a full description of our system as it relates to water management. We promised you a copy of the description after it was updated. The update has been completed, and the copy is attached. It includes a drawing showing actual location of components of the system rather than a schematic.

Sincerely,

H. C. Voepel
Plant Manager

HCV/lmb

Enclosures

HCV3008.JWR

SALT RIVER PROJECT

NAVAJO GENERATING STATION

General Description

January 6, 1989

General Station Description

Navajo Generating Station consists of three (3) pulverized coal-fired, steam electric generating units designed to produce approximately 2,235,000 kw net output. It includes, in addition to the main power building, a lake pumping station, ash disposal area, railroad maintenance facilities, coal and ash handling facilities, administration building, machine shop and warehouse facilities, water storage reservoir, water systems, mechanically induced draft cooling towers, and a 500 and 230 kv switchyard.

The site consists of approximately 1,000 acres for installation of three (3) units. The site is located on the Navajo Indian Reservation in Northern Arizona about five (5) miles southeast of Glen Canyon Dam.

The entire water supply for the plant is pumped from Lake Powell, the man-made reservoir created by the Glen Canyon Dam. The lake is approximately four (4) miles north of the station site and 800 feet below station elevation. Five (5) submersible pumps, each connected to a horizontal type surface pump, provide make-up water for the plant.

Coal is delivered to the site by a 78-mile captive railroad system from the Black Mesa coal fields in Arizona. The track system loops the north section of the site and unloads coal by means of bottom dump cars at the rate of approximately 21,000 tons per hour, three (3) times per day, and six (6) days per week. A 90-day coal dead storage pile is provided on site.

The coal is strip-mined by the Peabody Coal Company on land leased from the Navajo Nation. Electric locomotives deliver the coal to the unloading track hopper. Enclosed belt conveyors deliver the coal from the unloading hopper to the plant, or for stack-out and storage, by means of a stacker reclaimer.

Seven (7) coal silos, each 24 feet in diameter, are provided for each boiler unit to supply 10-hour storage. Coal is conveyed via a common enclosed conveyor system from an active yard coal storage pile to a surge bin located between Units 2 and 3. The coal is directed to Units 1, 2, and 3 by means of a cascade-type conveying system. Dual conveying belts are provided for the yard area to the power building to minimize the possibility of plant shutdown in the event of conveyor belt problems. The cascade coal gallery area located above the coal silos is partitioned off from the boiler-turbine areas and totally enclosed for control of coal dust.

The boilers are of the super critical design, with combined circulation, divided furnace, balanced draft firing, seven (7) levels of tangentially fired coal burners and a total of 56 coal burners per unit. Hot electrostatic precipitators are provided

with two (2) levels of eight (8) parallel passages, each with six (6) fields, to remove 99.5 percent of solid particulates.

Flue gas exits to a 775 foot high steel lined concrete stack for each unit.

The ash removal system handles fly ash and bottom ash from the boilers. Fly ash from the precipitators is transported immediately pneumatically via air blowers and pipelines to the fly ash storage bins. Fly ash is unloaded from these bins to the trucks of fly ash purchasers. Bottom ash is removed from the furnace hoppers and transported via pipeline slurry to the dewatering bins at the rear of the plant. After separation of the water carrying medium from the bottom ash, the bottom ash and remaining, unsold fly ash are transported by truck to the ash disposal area in a box canyon approximately two (2) miles east of the plant site. This disposal area has a capacity for about 46,000,000 cubic yards of ash. This storage will allow approximately 35 years of storage at an average plant load factor of 0.75. An earth dike is constructed across the entrance to the box canyon to facilitate initial ash retention and deposition as an engineered fill.

The turbines are General Electric tandem compound four-flow exhaust machines with 33.5-inch last stage blades and a gross output of 802 Mw per unit. Each turbine generator is arranged with the turbine shaft perpendicular to the boiler centerline and the single-shell main condenser is longitudinally mounted underneath the low-pressure turbine exhaust. Horizontal feedwater heaters are located at the mezzanine and operating deck levels. Two (2) bridge cranes are provided for the three (3) turbine generator units.

The turbine cycle consists of three (3) stages of pumping and contains three (3) low-pressure feedwater heaters, a direct contact deaerator, intermediate pressure heater and evaporator condenser at the boiler feed booster pump discharge, and one (1) high-pressure at the boiler feed pump discharge. Each of the enclosed feedwater heaters consists of two (2) half-capacity heater shells, making the heater cycle double-train, except for the evaporator condenser and deaerator.

Two (2) mechanically induced draft cooling towers are utilized to remove heat from the main condenser circulating water systems for each unit. Each cooling tower is approximately 400 feet long.

The main power building is totally enclosed except for the boiler area and certain specified equipment and piping, such as portions of the main steam lines, main transformers, and F.D., I.D., and P.A. fans. Except for the multi-story 210-foot-high boiler structure, the power building is essentially a three-story structural steel and concrete framework, with a steel grating mezzanine level 22 feet above grade floor, a concrete turbine

generator deck and control room 40 feet above grade floor, and a concrete coal feeder deck 52 feet 6 inches above the grade floor.

A 500 kv switchyard is provided for distribution of plant output to the participants and operated by the Arizona Public Service. This switchyard also provides power for the common station service auxiliaries under normal operating conditions. The 500 kv generator breakers are operated from the plant.

A 230 kv switchyard is connected by a ring bus to the USBR 230 kv lines to Glen Canyon and to Kayenta. This switchyard provides a reserve station service supply and 50 kv for the railroad catenary.

The entire site is enclosed by a 9-foot high chain-link fence except for the 500 kv switchyard which has a 6-foot fence.

Make-up Water System

The entire make-up water requirement for the Navajo Generating Station Units 1, 2, and 3 is obtained from Lake Powell, Arizona, and pumped via two 30-inch supply lines to the generating station.

The pumping station is designed for a maximum water elevation of 3,711 feet to a low of 3,490 feet above sea level. The design normal lake elevation is 3,640 feet above sea level.

The lake pumping station is located adjacent to the lake shore at an elevation of 3,733 feet above sea level. The system is a two-stage pumping station.

There are five (5) immersible first stage pumps, with the bottom of the intake screen at each pump at an approximately elevation of 3,480 feet. These pumps lift the lake water to five second stage booster pumps. The five (5) corresponding second stage booster pumps are of the horizontal type and discharge the raw lake water at rates equal to the three (3) unit plant maximum make-up flow requirement of 28,000 gpm.

Pump trains will operate singly or up to four (4) trains in parallel according to the immediate requirement of the plant make-up system and the lake level.

Station Water Treatment Plant

The purpose of the primary water treatment facility is to reduce the calcium and magnesium concentration and reduce the silica from the influent lake water to permit the operation of the cooling

towers with a minimum of blow down. The cooling towers are operated at approximately 15 cycles of concentration. Lime and soda ash are fed into the two (2) primary water softeners. From the collecting launders of the softeners, the water passes to the effluent tanks where acid is fed for pH adjustment.

The treated water then flows by gravity to the make-up reservoir through a stop gate arrangement which is provided to allow isolation of either half of the reservoir for maintenance.

The primary water treatment system is designed for a normal full load flow of 24,000 gpm. Two (2) softeners are provided. Each softener is capable of treating water at rates from 1,200 gpm minimum to 18,700 gpm maximum.

The soda ash and the lime solutions are pumped from their respective blending vessels at a rate proportional to raw water flow and at a rate to give optimum softening. Turbidity is controlled at less than 10 Ntu and a calcium hardness is maintained at less than 35 ppm.

Sulfuric acid is pumped by proportioning pumps located near the 20,000 gallon acid storage tank provided for the pH control system. The acid flow is discharged into mixing troughs, one for each effluent tank where it is diluted with service water before entering the effluent tank.

Sludge from the softeners is pumped to a centrifuge or to the two (2) sludge retention ponds. The centrifuge dewaters the sludge which is dumped into a truck and then hauled to the ash disposal area for disposal. The centrate from the centrifuge goes back into the reactivators through the effluent tanks.

When a sludge truck is being taken to the ash disposal area to be dumped, the sludge is bypassed to the sludge retention ponds. The liquid in the retention ponds is decanted and pumped to the station make-up ponds.

One retention pond is in operation at a time while the other is being cleaned out. Clean-out frequency is approximately once every two (2) years. The sludge retention ponds are lined with soil cement emulsion.

The make-up water reservoir is located north of the water treatment area and has a maximum capacity of 3.88 million gallons with a free-board of 1 foot 5 inches. The last 1 million gallons of this capacity is reserved for fire fighting.

The water reservoir consists of two (2) primary storage basins and three (3) secondary pumping compartments.

The dikes forming the primary basins are concrete lined and divided at their center line. Both basins share a common spillway, which also serves as access ramp for maintenance vehicles.

The depth of the primary storage basins is 10 feet 0 inches.

Fire Protection System

Fire protection water is pumped from the make-up reservoir by one or more of three (3) fire pumps.

The fire mains encompass the major facilities with a closed loop system. Remote facilities are served by branch lines from the looped system. Exterior fire protection is provided by fire hydrants and fire hose stations. Pressure is maintained in the lines from a connecting line to the service water supply mains and by a 60 gpm vertical turbine jockey pump.

Coal handling equipment, main and auxiliary transformers, the lube oil reservoirs and conditioners, and parts of the service building are protected by sprinkler systems.

A fixed low pressure CO_2 system is provided for the coal silos, pulverizers, and dust collectors and separators in the Power Block.

Portable CO_2 and Halon extinguishers are provided for protection of electrical and control equipment in the Power Building, Coal Yard Control House, and other outlying buildings.

In addition to the CO_2 and Halon extinguishers, all purpose portable dry chemical and pressurized water fire extinguishers are provided to supplement the fixed fire protection systems.

Service Water System

Plant service water demands are supplied by three (3) service water pumps that take water from the basin of the make-up water reservoir. A pump is located in each compartmented section of the pump structure to insure availability of a pump if one section of the reservoir basin is drained for maintenance or service.

Three (3) vertical two (2) stage pumps are provided. Each pump is rated at 3,000 gpm and normal operating pressure is 108 psig.

The pumps are sized so that the service water steady demands can be met by operation of a single pump. The intermittent demands can be met by a three (3) pump operation.

The service water system supplies the fire system for back-up, primary water treatment chemical feeders, evaporator feed, pump seals throughout the plant, emergency make-up to the bottom ash system, and washdown hose bibs throughout the plant.

Potable Water System

Potable water is drawn by two (2) potable water pumps from each of two (2) 30-inch underground make-up headers from the Lake Pumping Station. The potable water connections are located upstream of the primary water treatment system clarifiers. The potable water is chlorinated and sand-filtered to meet Arizona Public Health standards. The treated and filtered water is pumped to a 1,050 gallon vented head tank at an elevation of 166'-6" in the Power Plant Building. The potable water then flows by gravity through a distribution header system.

Evaporator Make-Up System

This system is designed for a maximum flow of 600 gpm and a minimum flow of 30 gpm. This system further softens the make-up to the lime-soda-softened water prior to feed to the evaporators. This system consists of the following:

1. Filtration in three (3) sand bed pressure filters to remove suspended solids.

2. Softening by three (3) sodium zeolite water softeners to remove scale forming solids, principally, calcium and magnesium.

3. Evaporation in a single-effect evaporator to remove dissolved solids, silica, dissolved oxygen and carbon dioxide.

The filters are backwashed and rinsed based on pressure drop. The backwash and rinse waters are put back into the reactivators through the primary water treatment sump and influent tanks.

The zeolite softeners are backwashed and regenerated based on total hardness in the effluent. They are regenerated using a saturated sodium chloride solution.

The zeolite softener regeneration systems includes a concrete brine vault containing up to 65 tons of salt and a pumping system that supplies the zeolite softeners during regeneration. Regeneration water is returned to plant make-up through the primary water treatment facility.

Three (3) evaporator feed pumps feed the single-effect evaporators from the zeolite softeners.

The distillate from the evaporators is used as make-up to the generating units. There are three (3) evaporators, one for each unit. The blowdown from the evaporators is sent to the circulating water systems of the corresponding units.

Steam Generator

The boiler is a coal-fired, oil-ignition, balance-draft, combined circulation, supercritical pressure unit, comprising the following, including accessory and related equipment.

1. Water cooled furnace walls, with divisional wall, membrane construction.

2. Horizontal and pendant steam cooled convection enclosures. Membrane construction with space roof tubes.

3. A continuous tube superheater consisting of division panels, platen pendant and finishing pendant assemblies.

4. A multistage reheater consisting of low temperature pendant and finishing pendant assemblies.

5. A finned tube economizer.

6. A boiler recirculation system including valves, mixing chamber, and two boiler circulating pumps.

7. Two regenerative type air preheaters, each having an automatic air operated sort blower.

8. Two steam coil air heaters.

9. Twenty long retractable soot blowers and ninety-six deslagging furnace wall soot blowers.

10. Seven gravimetric coal feeders.

11. Seven Raymond Bowl type pulverizers.

12. Ducts including flue gas, to and from electrostatic precipitator and air preheater, primary air duct to air preheater, secondary air ducts to air preheaters and wind box, hot and cold air ducts to mills, burner connecting piping, fly ash hoppers below the economizer section, and water filled hoppers beneath the furnace.

13. Two forced draft fans, two primary air fans and four induced draft fans, all motor driven.

14. Eight wind boxes.

15. Sixty-four burners, including 56 tangential tilting coal burners and 8 fuel oil warm-up guns plus 48 oil ignitors.

16. Seal air and ignition air systems.

17. Scanner cooling air system.

18. Two retractable thermoprobes, miscellaneous thermocouples and sampling coils.

19. Two TV cameras for furnace flame observation.

20. Membrane type casing.

21. Thermal insulation with aluminum lagging.

22. Structural steel and supports.

23. Boiler start-up system including valves and water separator tank.

24. Superheater and reheater attemperators.

25. Burner Control System.

26. Boiler Control System.

27. Chimney

28. Electrostatic precipitator.

The steam generator is a dry bottom, center wall furnace type, suspended from overhead structural steel, with the tubes and setting expanding downwards. Seismic ties are provided. Flexible connections or expansion joints allow for thermal expansion.

Subdividing the furnace is a full height division wall. The furnace and convection wall tubes form a monolithic structure with a welded membrane between adjacent tubes. The penthouse and header enclosures are covered by a steel casing.

The expanding furnace moves downward into a stationary water-filled trough around the top perimeter of the ash hopper to prevent outside air from entering the furnace.

Rating

Predicted performance figures for the steam generator, pulverized coal fired, at maximum continuous rating are as follows:

Superheater Outlet	Pulverized Coal
Steam flow - lbs. per hr.	5,400,000
Steam pressure - psig	3,590
Steam temp. °F	1,005

Reheater	Pulverized Coal
Steam flow - lbs. per hr.	4,850,000
Steam pressure inlet - psig	676
Steam pressure outlet - psig	646
Steam temp. inlet - °F	583
Steam temp. outlet - °F	1,002

Economizer Inlet	
Feedwater temp. °F	506.7

Air Preheater	
Air outlet temp. sec./pri. °F	582/609
Flue gas outlet temp. - (including leakage) °F	260

The steam generator superheater outlet steam temperature is to be maintained at 1,005 ± 10 °F. and the reheater outlet steam temperature at 1,002 ± 10 °F. throughout the load range from 25 to 102.5 percent.

Main Turbines & Auxiliary Turbines

MAIN TURBINES

The main turbines for Units 1, 2, and 3 are General Electric tandem compound reheat turbines with one high, one intermediate, and two double flow low pressure units on one shaft rotating at 3,600 rpm.

The turbines are designed to operate with main steam at 3,500 psig and 1,000 °FTT with the steam exhausting to the condenser through 33-1/2" last stage buckets. The capability of each turbine is 750,000 kw with 3.5 inches Hg abs. back pressure, 3 percent make-up and extraction for six (6) stages of feedwater heating and two (2) auxiliary turbines.

Main steam is supplied to the high pressure turbine through four (4) main steam stop valves arranged in parallel. Each stop valve is located upstream from one of the four main control valves. The stop valve bodies are interconnected to permit continued flow to all four control valves during stop valve testing. From the control valves, the steam enters the turbine through two lines at the top and two at the bottom of the high pressure casing.

Steam exhausts from the bottom of the high pressure casing through two lines to the steam generator and is reheated. The reheated steam is delivered to the bottom of the reheat (intermediate) pressure casing through two hot reheat lines. Each connection includes a combined stop-intercept valve. From the reheat casing exhaust, the steam flows into the low pressure turbines. The steam flow divides as it enters each of the two low pressure turbines and then exhausts into the dual-pressure condenser.

Steam is extracted from the cold reheat line for the first point feedwater heaters. Steam is extracted at the 10th stage in the intermediate pressure turbine for the second point feedwater heaters and the evaporator. Steam is extracted at the 13th stage in the intermediate pressure turbine for the deaerator feedwater heater and the boiler feed pump turbines. From the low pressure turbine, steam is extracted at the 14th, 16th, and 18th stages for the 4th, 5th and 6th feedwater heaters, respectively.

The following accessory equipment is furnished for each main turbine:

1. Reservoir for lubricating oil system complete with pumps, water-cooled heat exchangers, and vapor extractor.

2. Reservoir for hydraulic power unit complete with pumps, water cooled heat exchangers, filters, and air dryer.

3. One clean lube oil transfer pump (common to three units), and one dirty lube oil transfer pump for each unit.

4. Gland sealing system including seal steam regulator and steam packing exhauster with an exhauster blower.

5. Electric motor driven turning gear for each unit on the shaft between the low pressure turbine and the generator.

Common to Units 1, 2, and 3 is one lube oil storage tank for dirty lube oil, one tank for clean lube oil, and a lube oil centrifuge.

Main Condenser

The main condenser is of the deaerating single pass, dual pressure type with a vertically divided water box. The condenser is designed to maintain an absolute pressure of 2.73 inches of mercury in the high pressure half and 2.16 inches of mercury in the low pressure half at maximum design load, with a circulating water flow of 259,000 gpm at 83.2^{o}F, for an 85 percent cleanliness factor.

The tube length is 60 feet and the tubes are designed for a velocity of 7 fps. The Unit 1 tubes are 7/8 inch OD, 20 BWG ASTM B-111 90-10 copper nickel (alloy #706). The air removal tube material is 20 BWG ASTM B-11 70-30 copper nickel (alloy #715).

The Unit 2 and 3 tubes are 7/8 OD, Allegheney Ludlum AL-6XN stainless steel.

Each condenser unit is provided with an air removal system to evacuate air and other non-condensable gases in the exhaust steam, heater drains, and other miscellaneous returns directed to the condenser. These gases are evacuated continuously to maintain minimum absolute back pressure in the condenser and to minimize concentration of corrosive gases in the condensate system. Air and other undesirable dissolved gases are cooled internally in the air removal section of the condenser in order to reduce the specific volume of the gases and facilitate their removal.

The condenser air removal equipment provided for each condenser unit consists of two (2) principal items: a dual-stage condensing type steam jet air ejector and two (2) axial-flow rotary vacuum pumps, each with associated piping and controls.

Condensate System

The condensate system consists of condensate storage tanks, condensate pumps, piping, low pressure heaters, system controls in the turbine cycle upstream of the deaerator and polishing systems.

Condensate is pumped from the condenser hotwell compartments by two of three (2 of 3) condensate pumps. The condensate flows in parallel through the gland steam condenser and the air ejector condensers, after which part or all of the flow may be routed through the condensate polishing system. Flow then divides, and each half passes through three (3) heaters in series, the sixth, fifth, and fourth point heaters (two banks of three heaters).

One condensate storage tank of 500,000 gallon capacity is provided for each unit.

Each tank has mushroom vents, an overflow, a fill connection, a draw-off connection, and a drain.

There are three (3) vertical turbine type condensate pumps, each rated at 5,100 gpm and 900 feet total head, and each driven by an 1,185 rpm, 1,500 hp induction motor.

Condensate passes through the stainless steel tubes of the gland steam condenser to condense steam exhausted from the turbine steam seal system. The condensed steam passes to the drain receiver common to both the steam air ejector drains and the gland steam condenser. The gland steam condenser (condensate side) is piped in parallel with the air ejector.

Each generating unit has a condensate polishing system, the main components of which are three (3) mixed bed polishers designed to operate in parallel. A polisher is provided as common standby for either Unit 1 or 2. Unit 3 has its own spare mixed bed polisher.

An external resin regeneration facility is provided for each generating unit and comprises the following main components:

- One mixed resin separation and cation resin regeneration tank.
- One anion resin regeneration tank.
- One regenerated mixed resin storage tank with one complete spare charge of mixed resin.
- One sulfuric acid dilution system.
- One caustic dilution and heating system.
- One ammonia dilution system.
- Two regeneration (sluice) pumps.
- One (local) demineralizer control panel and motor control center.

The following main components, all located east of the power building, are common for Units 1, 2, and 3 polishing system.

- One sulfuric acid bulk storage tank of 10,000 gallon capacity with pumps to supply the acid to the regeneration vessels.

- Two caustic soda bulk storage tanks of 10,000 gallon capacity, each with pumps to supply the caustic to the regeneration vessels.

- One ammonia storage tank of 10,000 gallon capacity, with pumps to supply the ammonia to the regeneration vessels.

The regeneration equipment tanks are equipped with distributors, valves, and controls to transfer air scrub, rinse, separate, regenerate, ammoniate backwash, and air mix the resins. Each polisher has a resin trap to prevent loss of resin.

The caustic bulk storage tanks are electrically heated to prevent solidification.

Dilution of acid, caustic and ammonia is by the continuous in-line method. A heat exchanger heats the caustic dilution water to the correct temperature before mixing with the caustic.

Two regeneration pumps transfer condensate from the storage tank to the regeneration system for dilution water.

The polisher control panel has selector switches for manual or automatic operation of the equipment, status lights, annunciators, flowmeters to record and integrate the flow through each demineralizer and conductivity recorders. The starters for pump motors and motor operated valves are located at the motor control center.

A program controller operates switches to actuate valves and start and stop pumps. Timers which can be reset are located at the control panel. Level sensing devices are used to initiate and terminate operations as applicable.

The backwash and rinse waters from the regeneration system are recovered and reused. This recovery system now consists of a conductivity sensing system that either directs the flows to the sump system or to the floor drain recovery systems of each unit.

The sump system (one for each unit) consists of redundant pumps and piping that directs the backwash and rinse waters to the 35-4 if the conductivity of the water exceeds 1,000 us/cm. The 35-4 pond is a surface evaporation pond which cascades to the 35-5 and 35-6 evaporation ponds. From 35-6 pond, the water is then pumped through a temporary pump and piping to the S-6, S-7, S-8, S-9, S-10, and S-12 surface evaporation ponds.

The backwash and rinse waters that are sent to the floor drain recovery system are waters that are less than 1,000 us/cm and are

approximately 65% of the total water used for backwash and rinses in the regeneration systems.

In the next two to three months, a system will be installed that will recover all of the backwash and rinse waters regardless of the conductivity. The new system will use sump pumps and piping to direct the regeneration flows to either the floor drain recovery systems or to the reactivator effluent tank in the primary water treatment area. The system will be automatically set up to direct the flows of each regeneration step to the appropriate recovery system based on water quality. When this system is placed in operation, there will be no regeneration flows going to surface evaporation ponds.

The bulk acid, caustic and ammonia storage tanks have concrete containment walls around them. These containment areas drain to a sump with redundant pumps and piping to direct the flows to the S-5 pond. This pond is lined with H.D.P.E. 100 mill. lining.

The S-5 pond also receives the boiler acid cleaning flows. The floor drain sumps at each unit are used to pump the acid cleaning flows to S-5 through diversion piping and valving.

After leaving the condensate polishing system, condensate flows to the sixth point, fifth point, and fourth point heaters. Drains from the heaters cascade to the condenser. High level emergency drains to the condenser are provided for each of the heaters.

Feedwater System

The feedwater system consists of boiler feed booster pumps, feedwater pumps, piping, intermediate and high pressure heaters. The feedwater system is divided into two parts; the deaerator to the boiler feed pumps, and the boiler feed pumps to the steam generator.

Three motor driven boiler feed booster pumps draw from the deaerator storage tank and pump feedwater through the evaporator condenser and through the two second point heaters, to the boiler feed pumps which in turn discharge through the first point heaters to the steam generator. The flow divides at the inlet to the second point heaters and two separate feedwater trains are provided, with crossover equalizing line downstream of the boiler feed pumps.

Each of the two half-capacity variable speed boiler feed pump is driven by an auxiliary turbine.

Each generating unit is capable of maintaining approximately 90% of maximum load with one train of heaters out of service.

After leaving the fourth point heaters, the condenser flows to the third point heater or deaerator.

The third point heater is a horizontal spray, tray type, deaerating heater consisting of a deaerating section and a storage tank. Spray pipes distribute the condensate to integrally mix with extraction steam in the deaerating section. The condensate then cascades over trays for maximum surface contact with steam to effect removal of non-condensable gases.

The heated and deaerated condensate drains to the 63,500 gallon storage tank. The spray area also serves as a vent condenser. Non-condensable gases and some steam is vented to the atmosphere through an exhaust head.

The guaranteed maximum oxygen content of the condensate leaving the deaerator is 5 ppb.

From the third point heater or deaerator, the feedwater goes to the boiler feed booster pumps. There are three half-capacity pumps. Each pump is a split case, single stage, centrifugal pump rated at 6,600 gpm.

From the boiler feed booster pumps, the feedwater flows to the evaporator condenser. The evaporator condenser is a tube and shell design and serves to recover heat from the make-up evaporators prior to discharge of the distillate to the main condensers.

From the evaporator condenser, the feedwater then goes to the two (2) second point heaters.

Then, the feedwater from each second point heater flows to each boiler feed pump. There are two half-capacity, auxiliary turbine driven, variable-speed feedwater pumps. Both pumps should be in operation at 40 percent load and higher but each pump is designed to carry up to 65 percent load if required.

Each boiler feed pump is a barrel type, six-stage, centrifugal pump rated to deliver 6,900 gpm of 415°F feedwater at 3,850 psia and is designed for variable speed operation up to 5,550 rpm. An interstage extraction nozzle is provided on each pump to supply attemperation water for the reheater sprays. The lubricating oil system for each pump is combined with that for the auxiliary turbine.

Feedwater then flows from the boiler feed pumps to the two first point heaters.

The drains from the first and second point heaters go to the deaerator. High levels in the heaters drain to the condenser.

There is a chemical feed system for each unit. They consist of tanks, pumps, piping, instrumentation and control systems. The chemical feed systems maintain the pH of the condensate and feed water system within a 9.2 to 9.6 pH range. Ammonia is used for pH control. An oxygen scavenger is injected into the feedwater to remove oxygen in the system. Nalco Chemical Company's IUM-686 is used as the oxygen scavenger.

Circulating Water System

The total circulating water requirement to the main condenser and the bearing cooling water system is supplied by two pumps per unit, which take suction from the cooling tower intake structures and discharge through two 78 inch lines to the main condenser. The main condenser is divided into halves. Each half is supplied with circulating water by a separate supply system which includes one circulating water pump, one induced draft, cross flow cooling tower, and interconnecting piping.

Between the circulating water pumps and the main condenser, two branch lines supply water to the tube side of the bearing cooling water heat exchangers.

Chemical concentration in the circulating water is controlled by blowdown. This water is sent to two surge ponds, 60-1 "A" and "B". These are lined with 100 mill H.D.P.E. The 60-1 "A" pond has a capacity of 73.00 ac-ft. The 60-1 "B" pond has a 77.39 ac-ft capacity. Either one or both of the ponds can be in service at a time. A pumping system pumps the cooling tower blowdown from the 60-1 pond to the three brine concentrators. Provisions are also present to pump cooling tower blowdown to the ash system make-up tanks.

Each induced draft cross flow cooling tower is designed for 135,500 gpm of circulating water at an approach temperature of 109°F and a discharge temperature of 83°F, based on a 69°F ambient wet bulb temperature.

Each tower consists of 10 cells each with a 28-foot diameter fan driven by a 200 hp motor.

Each tower has two distribution manifolds which extend along the tower length on both sides.

Each tower is approximately 400 feet long and is arranged with the long axis of the tower parallel to the most predominant wind

pattern on the site. Maximum tower performance is expected when North-South winds are prevailing.

Each tower basin has a storage capacity of approximately 231,000 gallons, based on limiting drawdown to pump minimum operating level.

There is one intake structure for each cooling tower. Each structure is 41 feet wide and 31'5" long. The depth of the cooling tower basin is 17'0" at the pump intake structure. The approach channel depth varies from 5'4" to 17'0", has a total length of 75'0" and a maximum width of 17'6".

Each intake structure is designed to handle the flow for one circulating pump (135,500 gpm) and is provided with a vertical water screen for removing debris from the circulating water. A duplex sump pump unit is provided in each structure for draining. A screen is provided at the inlet of each sump to protect the pumps. The sump pumps discharge to their respective tower basin.

A screen cleaning pad is provided at each pump structure to permit screen washing in the stand-up position. A mobile crane is utilized to withdraw the screens for cleaning.

The total circulating water requirement of 271,000 gpm to the main condenser and to the bearing cooling water system is supplied by two single stage, horizontal, centrifugal circulating water pumps with double end suction and center discharge.

Each pump is capable of delivering 135,500 gpm against a total dynamic head of 66'0". Each pump is driven by a single 3,000 hp, 360 rpm, 60 hertz, 4,000 volt induction motor.

The pumps have motor operated butterfly valves. Vent and drain piping is provided for each pump.

Seal and bearing lubrication water for the pumps is supplied by water from the service water system. The circulating water pump lube oil system is composed of a 15-gallon oil reservoir, a shaft driven main oil pump and oil cooler.

Cooling tower make-up is supplied from the station make-up water reservoir by five (5) vertical pumps. The pumps are located in the three (3) individual intake structures of the make-up reservoir such that an outage of one intake structure will not affect more than one main generator unit operation. The make-up pumps take suction from its individual pumping compartment of the make-up water reservoir.

Unit 1 and 2 pumps are single stage, with a capacity of 8,000 gpm, and a 50-foot total dynamic head. Each pump is driven by a vertical, directly coupled motor, 125 hp, 460 volts, 3 phase, 60 Hertz, 1,187 rpm, TEFC.

The Unit 3 make-up water pumps require a higher discharge head due to the additional pumping distance and the 25-foot higher elevation of Unit 3 cooling tower above Units 1 and 2. The two pumps for Unit 3 cooling towers have a capacity of 8,000 gpm against a total head of 100 feet. Each of these Unit 3 pumps is driven by a vertical, directly coupled motor, 250 hp, 460 volts, 3 phase, 60 Hertz, 1,187 rpm, TEFC.

The scaling potential, corrosion and biological activities are controlled by the addition of chemicals to the circulating water systems.

Scaling is controlled by the addition of Nalco Chemical Company 1391 and controlled at a 40 to 60 ppm range. Scaling potential is also controlled by adjusting the pH of the circulating water system at 7.2 to 7.5 pH range. Sulfuric acid is used to adjust pH.

Copper corrosion is controlled by adding Tolyltriazole to each system.

For biological control, the circulating water system are chlorinated once per day with chlorine gas. A bio-dispersant, Nalco Chemical Company 1366, is used once per week and a biocide, Nalco Chemical Company 1378, is used once a month on Units 2 and 3 and once per week on Unit 1.

Fuel Oil Handling

The fuel oil system consists of a central fuel oil storage tank, fuel oil supply and transfer pumps, filters, controls and piping. The fuel oil system supplies No. 2 fuel oil to each main unit boiler for the ignitors and start-up retractable oil guns. In addition, fuel oil is supplied to fire the auxiliary boilers. The fuel oil to each boiler is controlled by its respective Boiler Control System.

The fuel oil storage facilities are common to all three (3) units and the auxiliary boilers. A single fuel oil storage tank, having a capacity of 120,000 barrels, is provided. Diesel No. 2 fuel oil is transferred to the storage tank from supply trucks by either of two full capacity rotary gear fuel oil transfer pumps, each of which can deliver 300 gpm of fuel oil with a viscosity of 750 SSU against a discharge pressure of 76 psia. These pumps can be started or stopped by the operator locally.

Coal Handling System

The coal handling and conveying system delivers coal from the unloading hoppers to coal storage silos by means of a system of conveyors and surge bins, or to stack out at the three (3) day active pile by means of the bucket wheel stacker-reclaimer. The overall coal handling system process is as follows:

1. The coal (2XO nominal size) is transported from the Peabody Black Mesa mine and delivered to the site by unit train. The train delivers coal three (3) times daily, six (6) days per week. The delivered coal is unloaded into one 10,600 ton capacity track hopper at the plant site.

2. A weighing and sampling system weighs and samples the coal as received. A three-stage sampling system is used for sampling the "as received" coal. A two-stage sampling system is used to sample coal reclaimed from the active pile. Coal reclaimed from the emergency storage pile is not sampled.

3. A single conveyor system delivers coal to the yard surge bin located in the sampling building.

4. A dual parallel conveyor system delivers coal from the yard surge bin to the coal silos located above the pulverizer mills. There are seven (7) storage silos per each steam generating unit.

5. The coal in excess of that required by the plant is transported to the active storage pile. Coal is reclaimed from the storage pile by the bucket wheel machine and transported to conveyors 8A and 8B when the train is delayed and on days when the train is not operating.

6. During emergencies when coal cannot be obtained from the mine, coal is reclaimed from the dead storage pile by scrapers and pushed into the emergency reclaim hopper by bulldozers.

7. A conveyor system delivers coal from the emergency reclaim hopper to the coal storage silos.

8. Dust control is provided for the coal handling system and consists of enclosures, dust collectors and dust suppression spray systems.

9. Coal from each silo is delivered by a gravimetric type feeder to its corresponding coal pulverizer. There is one pulverizer for each coal storage silo.

10. The coal is ground in the pulverizer to 65% passing through a 200 mesh screen. Pulverizers have integral separators.

11. Primary air is used to convey the pulverized coal from the pulverizers to eight (8) tangential burner assemblies located at each corner of the furnaces, where the coal is fired.

12. Pulverizer seal air is used to retain coal dust within the pulverizer.

Bottom & Fly Ash System

GENERAL

The ash handling facility consists of essentially two (2) independent systems, the Bottom Ash System and the Fly Ash System.

Bottom ash is flushed from the boiler bottom ash hopper, crushed and mixed with water, and pumped as a slurry to the dewatering bins. Here, the ash is dewatered and stored. Trucks haul the ash from the bins to the disposal area. Water drained from the ash is clarified in the settling tanks, collected in the surge tanks and recirculated as required within the ash systems.

Ash from the economizer hoppers is slurried locally with water and is conveyed to the bottom ash hoppers for interim storage. This ash is conveyed to the dewatering bins along with the bottom ash in the normal hopper flushing operations.

Mill rejects are continuously collected in the mill storage hoppers, and periodically transferred as a slurry to the pyrites transfer hopper. From the transfer hopper, the pyrites are pumped to the dewatering bins through the bottom ash discharge lines in sequence with the bottom ash.

The bottom ash system is designed to handle, for each boiler, 9.6 tons per hour based on a maximum continuous coal burn rate of 368 tons per hour. This production rate is based upon a maximum total ash content of 13 percent of coal burned, bottom ash being 20 percent by weight of the total ash produced, and bottom ash density of 37 lbs./cu. ft.

The mill pyrites system is designed to handle a maximum of 4.8 tons per hour. This rate is based upon economizer ash being 10 percent of the total ash produced.

Fly ash is conveyed from the electrostatic precipitator hoppers via a pressurized pneumatic system to the fly ash bin located adjacent

to the dewatering bins. In the fly ash bin, entrained air is vented-off through filters, and the fly ash is stored for removal by trucks.

The production rate of fly ash in each boiler is 38.3 tons per hour with a continuous burn rate of 368 tons per hour of coal, based on total ash content of 13 percent of coal burned and fly ash being 80 percent by weight of the total ash produced. There are two (2) conveyors for each unit, each rated at 35 tons per hour continuous conveying rate.

Fly ash is also sold to an independent company and trucked off the plant site. It is primarily used as a construction material.

Bearing Cooling Water

The cooling water system is a closed circuit in which condensate from the cooling water storage tanks is circulated by pumps through the shell side of bearing cooling water heat exchangers, to the auxiliary equipment requiring cooling water, and then returned to the storage tank. Each unit has its own closed looped cooling water system. However, there are some normally closed interconnections between systems including:

1. A standby heat exchanger, manually valved to Units 1 and 2.

2. A sample chiller condenser, which can be supplied from Unit 1 or 2.

3. The power building air conditioning system which can be supplied from Unit 1 or 2.

Circulating water in the tube side of the heat exchangers remove the heat load of the cooling water system. Circulating water to the heat exchangers is supplied by lines from the discharge of the circulating water pumps and returned to the cooling towers.

Two (2) cooling water pumps and two heat exchangers are provided for each unit. A common spare heat exchanger is provided for Units 1 and 2 and a spare heat exchanger is provided for Unit 3.

During normal operation, the bearing cooling water requirements are met by one pump and one heat exchanger per generating unit.

During abnormally hot summer conditions with the larger air conditioning loads, the bearing cooling water system for Units 1 and 2 may require two (2) pumps and two (2) heat exchangers be

placed in operation. Two (2) pumps and two (2) heat exchangers may also be required to meet the peak summer cooling loads for Unit 3.

Each pump is connected to its respective storage tank through its individual suction line which is provided with a 24-inch butterfly valve for isolation. Temperature of the cooling water is monitored in the cooling water heat exchanger inlet and in the discharge header.

Isolation valves (20-inch butterfly type) are installed at the intake and discharge lines of each heat exchanger. This arrangement permits the operation of either the on-line or standby heat exchanger, when maintenance is required. There are additional isolation valves at the discharge and recirculation lines of each pump for maintenance.

Condensate is used in the cooling water system to prevent scaling of the cooling passages in the various equipment heat exchangers and bearing cooling passages. Nalco Chemical Company's 8320, chromate solution is used as the corrosion inhibitor and is controlled at 300 to 500 ppm as CrO_4.

The capacity of each cooling water storage tank is 50,000 gallons. To replenish system losses, make-up to the cooling water storage tank is provided from the condensate polishing system effluent line.

Two double suction centrifugal cooling water pumps, one operational and one standby are provided for each Unit. Each pump is rated to deliver 10,000 gpm at 125 ft. total dynamic head. The pumps are direct driven by a 400 hp, 1,200 rpm, 4,160-volt induction motor.

The heat exchangers are the horizontal, straight tube, counter flow type. Each exchanger is capable of cooling 10,000 gpm of condensate from 105°F to 95°F using cooling tower water at 85°F as coolant.

Bearing cooling water passes through the shell side of the exchanger and circulating water passes through the tube side. Each heat exchanger has a removable tube bundle and outside packed floating tube sheet. The tube material is annealed arsenical admiralty copper alloy.

The quantity of bearing cooling water required and the method of controlling the flow varies with each piece of equipment. where large quantities of water are required and control of temperature is critical, temperature controllers are employed. When intermittent service of equipment requiring cooling water occurs,

solenoid valves are used. Where flow quantities are fixed or minor, manual valves are used. Temperature controllers are provided for the control of both main and auxiliary turbine lube oil temperatures, generator hydrogen temperature, air compressor cooler temperature and hydraulic fluid temperature.

N_2, H_2 and CO_2 Systems

In order to minimize the corrosive effects of oxygen during scheduled unit or equipment outages, nitrogen, blanketing system is provided for the boilers, deaerators and for other equipment in the condensate and feedwater system.

The generator rotors are cooled by hydrogen at 75 psig pressure. A central hydrogen storage and distribution system is provided to facilitate filling and refilling of the generators as well as making up the loss during operation. To avoid an explosive hydrogen mixture in a generator casing when initially filling with hydrogen, or when removing the hydrogen before opening the casing to atmosphere, the air or hydrogen in the casing is removed by purging the casing with carbon dioxide (CO_2).

Carbon dioxide is used for fire protection systems in silo, pulverizer and bag-filter areas of the coal handling system, as well as for purging the main generator units as noted above.

Brine Concentrator System

The brine concentrator consists of three (3) brine concentrators with a total feed capacity of 1,405 gpm. The No. 1 brine concentrator is rated at 205 gpm with the No. 2 and No. 3 brine concentrators rated at 600 gpm each.

The brine concentrators accepts cooling tower blowdown from the 60-1 "A" or "B" surge ponds and concentrates it to a high solids level returning the distilled water to the station for reuse. The blowdown from the brine concentrators provide feed to the crystallizer.

The principal equipment of the process are:

1. The Feed System - Sulfuric acid is added to the feed and this pH controlled stream is heated in a heat exchanger and deaerated. This deaeration removes non-condensible gases such as oxygen and carbon dioxide.

2. The Evaporator/Condenser System - The feedwater is concentrated to a brine solution and circulated as a thin film down the inside of the tubular heat transfer surfaces (tubes). Steam is condensed on the outside surfaces of the tubes and collected as product.

3. The Product System - The product water (condensed steam) is collected in the product tank and is pumped counter current to the feed through the heat exchanger where it is cooled.

4. The Blowdown System - One small stream of circulating brine is drawn off to maintain the concentrated brine at a constant composition. A second stream is pumped through a recycle cone where the suspended solids (SS) are drawn off and returned to the sump brine.

Cooling tower blowdown enters the feed tank for acid treatment. This acidified feed is then pumped by the feed pump through the heat exchanger where it flows countercurrent to the condenser product water. The feed then flows through the deaerator releasing carbon dioxide, oxygen and other non-condensible gases.

The deaerated hot feed then flows into the evaporator sump where it mixes with the concentrated brine.

The concentrated brine is recirculated by the recirculation pump to the flood box where it is distributed as a thin film on the inside of 2,500 titanium tubes (tube side of the condenser).

As water is evaporated from the brine, this vapor is drawn through a demister (mist eliminator) into a single-stage centrifugal compressor, which raises its saturation temperature above the boiling point of the recirculating brine. This compressed steam is then introduced to the shell side of the condenser where it gives up its heat of vaporization and condenses. This condensate is collected in the product tank and pumped (counterflow to the feed) out through the heat exchanger as product water.

A seed recycle system is provided for suspended solids control in accord with specific seed-slurry control parameters. The seed recycle system functions to remove most of the suspended solids from the blowdown and returns these to the evaporator sump.

A side stream from the recirculating slurry is also discharged through a control valve. By controlling the relative amount of high suspended solids from the recirculating slurry and slow suspended solids from the seed separator, the desired levels of suspended and dissolved solids in the sump are maintained.

The distallate (product water) is pumped to a 500,000 gallon condensate storage tank where it is sent to the generating units for boiler make-up. The excess product water that is not used for boiler make-up is sent to the plant make-up ponds which ends up as cooling tower make-up, service water and fire water.

The blowdown stream from the brine concentrator is fed to the crystallizer through a lined ditch or a pumping station.

Crystallizer

The crystallizer gets its feed from the brine concentrators' blowdown flow. It has a feed capacity of 90 gpm. The purpose of the crystallizer is to recover the water in the brine concentrator blowdown and produce a solid waste for disposal.

The crystallizer is a mechanical vapor recompression evaporator. The system is made up of a vapor body, heater, recirculating, entrainment separator, two solid bowl centrifuges, electric boiler and a mechanical compressor. There are two (2) surge ponds, 35-1 and 35-2 that collect brine concentrator blowdown when the crystallizer is non-operational. There is a redundant pumping system which returns the blowdown back to the crystallizer.

The waste is hauled by truck to a pond lined with 100 mill. H.D.P.E. and disposed of.

Plant Drainage - West Side

The S-13 surge ponds, lined with H.D.P.E. lining, collects run-off from the west side of the plant, Unit 3 cooling tower overflow and draining at the towers, condensate storage tank overflow and bearing cooling water tank overflow and draining.

The surge pond has a redundant pumping station. The outflow is normally sent to the 60-1 "A" and "B" surge ponds and then used as brine concentrator feed. The flow out of S-13 can also be sent to the floor drain collection ponds, S-1, S-2 or S-3, whence, it is pumped to primary water treatment to enter plant make-up. The quality of the water in S-13 would determine where it is sent.

Plant Drainage - East Side

There is a network of ditching that directs run-off to a sump system just north of the station bottom ash and fly ash handling systems. This sump system is primarily used to recover ash system overflows in addition to the run-off.

The first sump with redundant pumps discharges back into the ash system to retain and control small upsets in the ash systems.

The second sump collects large upsets and coal pile run-off. The second sump has redundant pumps and discharges to the 35-3 pond. There is a partition the 35-3 pond that has been temporarily made to serve as a surge pond to collect the flows out of the ash system sumps. There is temporary pumping and piping that sends the water collected in 35-3 to 60-1 "A" and "B" cooling tower blowdown ponds.

The flows out of the ash system overflow sumps will be piped directly to the S-13 surge pond in the near future. At that time, the 35-3 temporary collection and recovery system will be abandoned.

Floor Drain Recovery

There is a network of ditching and floor drains inside the generating unit's power block building. These drains are first collected in a sump (one for each unit) and then pumped to the S-2 and S-3 collection ponds. The two ponds hydraulically under flow to the S-1 surge pond. The under flow configuration is to remove oils that could end up in the floor drains. The S-1 surge pond also receives flow from the sewage treatment plant effluent.

The S-2 pond has a 8.23 ac-ft capacity. The S-3 pond has a 12.62 ac-ft capacity. The S-1 pond has a 9.59 ac-ft capacity. All three (3) ponds are lined with a H.D.P.E. 100 mill. lining.

There is a redundant pumping system that pumps the S-1 surge pond waters to the reactivators in the primary water treatment system for recovery.

The S-1, S-2 and S-3 ponds were lined during 1987. While they were being lined, a temporary pond was installed utilizing a portion of the 35-3 pond. This temporary pond under flowed into the temporary ash system overflow collection pond that is part of the 35-3 pond.

The temporary floor drain collection pond has been abandoned.

60-2 & NE-1 Ponds

These two (2) ponds are used for emergency surge and collection in the event of a very large system upset or storm. The 60-2 pond is located at the extreme northwest area of the plant site. The NE-1 pond is located at the extreme northeast area of the plant side.

The 60-2 pond has a 385.71 ac-ft capacity and the NE-1 pond has a 446.16 ac-ft capacity. The 60-2 pond is unlined while the NE-1 pond is lined with 100 mill. H.D.P.E. No flows are normally directed to these ponds. In the event of water accumulation in the ponds, temporary pumping and piping would be used to direct the water to appropriate recovery system based on water quality. These ponds are also classified as dams and are operated and maintained as such.

Sewage Treatment Plant

The sewage treatment plant is located northeast of the Unit 1 cooling towers. The plant consists of a chlorination system, sludge digestive chambers and aeriation blowers. After chlorination of the effluent, it is pumped to the S-1 surge pond and recovered. The sewage treatment plant's maximum flow rate is 50 gpm.

The sludge accumulated in the sludge chambers is pumped out on a quarterly basis by a contracted firm and disposed of in the City of Page's landfill.

Nov. 14, 1988 Bill Weis
Photo No. 1

The Salt River Project Navajo Generating Station, Navajo Nation, Arizona.

Nov. 15, 1988 Bill Weis
Photo No. 2
The Black Mesa and Lake Powel Railroad (BM&LP)transporting coal from the Peabody Coal Mine to the Navajo

Nov. 14, 1988 Bill Weis
Photo No. 3

The Unit 3 BCWS storage tank. Note the concrete lined channel leading away from the tank.

Nov. 14, 1988 Bill Weis
Photo No. 4

Another view of the The Unit 3 BCWS storage tank and the concrete lined channel leading away from the tank.

Nov. 14, 1988 Bill Weis
Photo No. 5

The concrete lined channel leading away from the Unit 3 tank to the earthen ditch.

Nov. 14, 1988 Bill Weis
Photo No. 6
Junction of concrete channel and earthen ditch. This ditch carries liquid waste from the BCWS tanks to the S-13 and S-14 ponds.

Nov. 14. 1988 Bill Weis
Photo No. 7

The Unit 1 and 2 BCWS storage tanks.

Nov. 14, 1988 Bill Weis
Photo No. 8

The S-14 pond which recieved chromium wastes from the years 1980 to late 1988.

Nov. 15, 1988 Donn Zuroski
Photo No. 24

The NGS Paint Shop Accumulation Area.

Nov. 15, 1988 Donn Zuroski
Photo No. 25

Close-up of the single drum in the NGS Paint Shop Accumulation Area.

Nov. 15, 1988 Donn Zuroski
Photo No. 26

The NGS Waste Oil Storage Tank.

Nov. 14, 1988 Bill Weis
Photo No. 9

The S-13 pond which is designed to recieve any liquid wastes drained from Unit 1-3 tanks after fall 1988.

Nov. 14 1988 Bill Weis
Photo No. 10

The S-12 pond now receiving liquids from pond 35-6 (resin regeneration waste).

Nov. 14 1988 Bill Weis
Photo No. 11

Blowdown Ponds 60-1a and 60-1b. liquids S-13 and S-14 are pumped into these ponds.

Nov. 14. 1988 Bill Weis
Photo No. 12

The 35-1 through 35-8 cascading ponds.

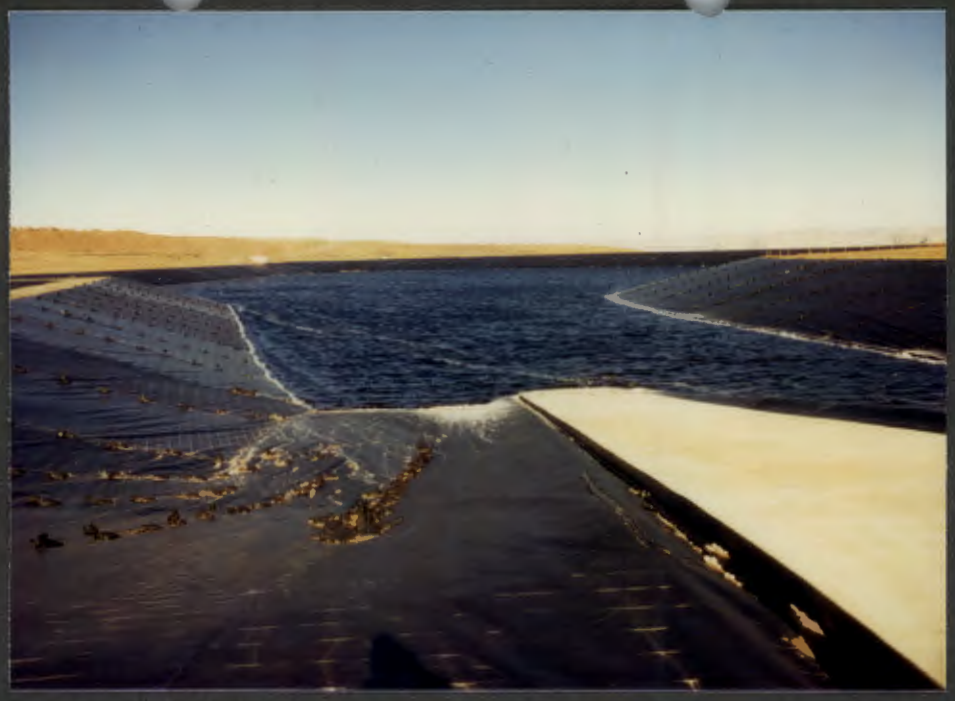

Nov. 15, 1988 Bill Weis
Photo No. 13

The NE-1 pond (now inactive). It previously recieved liquids from the 35-6 pond.

Nov. 15, 1988 Bill Weis
Photo No. 14

Upper oily waste pond recieving floor drain wastes from the 3 electrical generating units.

Nov. 15, 1988 Bill Weis
Photo No. 15

SD pond which recieves salts from the facility Salt Crystalizer.

Nov. 15, 1988 Bill Weis
Photo No. 18

The Flyash landfill.

Nov. 15, 1988 Bill Weis
Photo No. 16

NE 2 and 3 pond (now inactive). They previously recieved liquids from the NE-1 pond.

Nov. 15, 1988 Bill Weis
Photo No. 17

The Railroad maintenance building floor Drain pond.

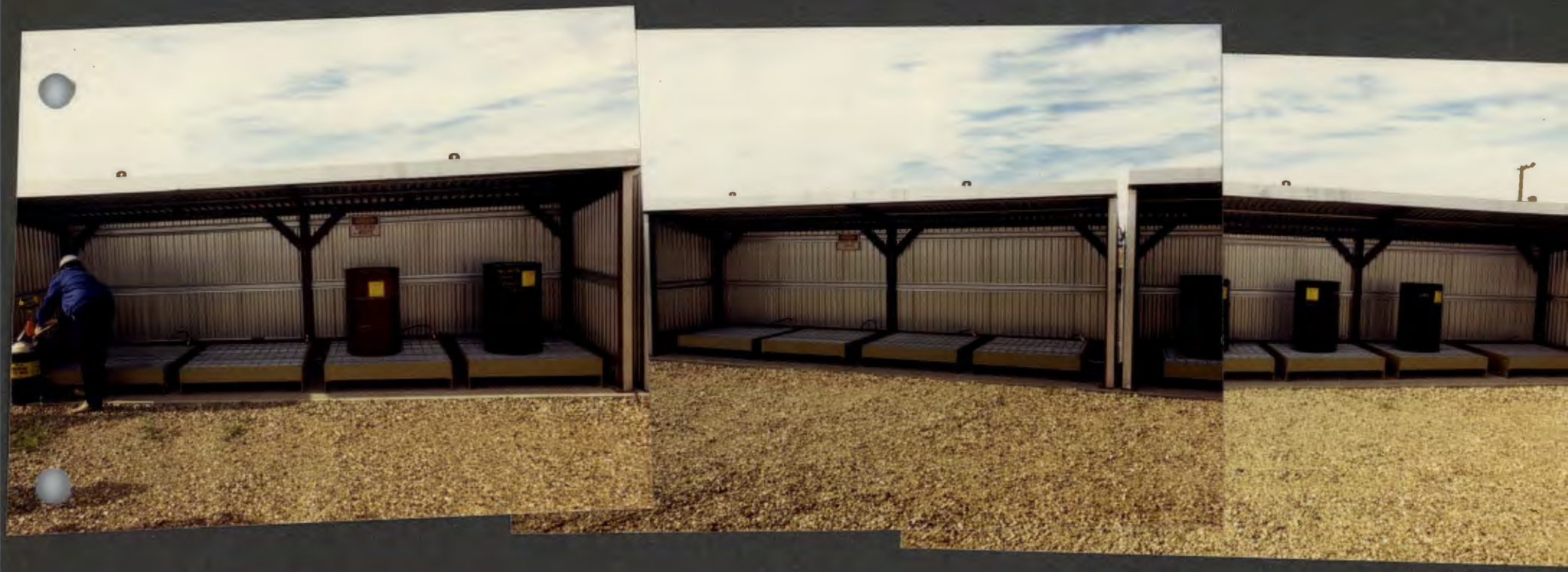

Nov. 15, 1988 Donn Zuroski
Photo No. 19

The NGS Central Storage Area.

Nov. 15, 1988 Donn Zuroski
Photo No. 20

The NGS Central Storage Area. Note that the eye wash is leaking because the drain plug was removed.

Nov. 15, 1988 Donn Zuroski
Photo No. 21

The NGS Central Storage Area. Note the warning signs.

Nov. 15, 1988 Donn Zuroski
Photo No. 22

The NGS Maintenance Shop Accumulation Area.

Nov. 15, 1988 Donn Zuroski
Photo No. 23

Close-up of the single drum in the NGS Maintenance Shop Accumulation Area.

	Yes	No	Comments
Termination of interim status:			
Did the facility submit a requested Part B in full, and on time? 270.10(e)(5), 270.73(b)	N/A	N/A	
For land disposal facilities granted interim status prior to 11/8/84, did the facility submit before 11/8/85: 270.73(c)-			
(1) Part B of the permit application?			
(2) Certification of compliance with all applicable ground water monitoring and financial responsibility requirements?			
For land disposal facilities granted interim status after 11/8/84, did the facility submit within 12 months: 270.73(d)-			
(1) Part B of the permit application?			
(2) Certification of compliance with all GW monitoring and financial responsibility requirements?			
For incinerator facilities, did the facility submit a Part B before 11/8/86? 270.73(e)			
For any other facility, has a Part B been submitted?* 270.73(f)	(		)

See also surface impoundments (265.221(b), p. K1) and landfills (265.301(b), p. N1).

*If not submitted prior to 11/8/88, interim status will terminate on 11/8/92.

Interim Status:
(Part 270 Subpart G)

	Yes	No	Comments
For the existing HWM facility to be treated as having been issued a permit, has the facility:			NGS HAS NOT SUBMITTED A NOTIFICATION FOR THE TSD (TREATMENT, STORAGE, AND DISPOSAL) OF THE BEARING COOLING WATER SYSTEM CHROMIUM WASTE OR AS A STORAGE FACILITY OF DRUMMED WASTE
Obtained an EPA Identification number by submitting a Notification of Hazardous Waste Activity? and/or: 265.11, 270.70(a)(1)		✓	
Complied with the 270.10 deadlines for Part A submissions*? 270.70(a)(2)		✓	Date(s):
Completed the Part A per 270.13? 270.70(b)		✓	
Not previously been denied a RCRA permit or interim status? 270.70(c)	✓		
Has the facility complied with the following restrictions while operating under interim status: 270.71(a)-			ATTACHMENT 2
(1) Has only treated, stored or disposed of H.W. specified in the Part A?		N/A	
(2) Has only employed processes specified in the Part A?			
(3) Has not exceeded design capacities specified in the Part A?			
Has a revised Part A been submitted prior to the following changes: 270.72-			
(a) T/S/D of H.W. not previously identified in the Part A?			
(b) Increases in design capacity of processes?			
(c) Changes in or additions to processes?			
(d) 90 days prior to change in ownership?			
(e) Have the changes made not amounted to reconstruction? (>50% of costs for an entirely new facility, except for changes made solely for complying with new 265.193 (tanks).)			

*earliest applicable of: 11/19/80, 6 months after new reg's published, 30 days after they first become subject to reg's. (270.10(e)(i)-(iii)(3))

General Facility Standards:
(Part 265 Subpart B)

	Yes	No	Comments
Required Notices:			
Has the RA been notified at least 4 weeks prior to the receipt of H.W. from a foreign source? 265.12(a)	N/A		
Before transferring ownership or operation, has the facility notified the new owners/operators in writing of the requirements of Parts 265 and 270? 265.12(b)	N/A		
General Waste Analysis:			
Has the facility obtained a detailed chemical and physical analysis that contains all information that must be known to properly treat, store or dispose of each H.W.? 265.13(a)(1)	✓		
Does the facility have records documenting the required H.W. analysis, e.g., lab reports, published data, generator supplied data as developed under Part 261? 265.13(a)(2)	✓		
Has the analysis been repeated to ensure that it is accurate and up-to-date? 265.13(a)(3)	✓		
Is the analysis repeated when there is a change in the generating process? (265.13(a)(3)(i)	✓		
For off-site facilities, is the analysis repeated when the H.W. received does not match the H.W. designated on the manifest? 265.13(a)(3)(ii)	N/A		
For off-site facilities, does the facility inspect or analyze each movement of H.W. to verify that the H.W. received matches the identity of the H.W. specified on the manifest? 265.13(a)(4)	N/A		

	Yes	No	Comments
Has the facility developed and followed a written waste analysis plan, and is the plan kept at the facility? 265.13(b)		✓	
Does the waste analysis plan contain the following elements: 265.13(b)-			
(1) Parameters of analysis of each H.W. handled and the rationale for the selection of these parameters?			
(2) The methods which will be used to test for these parameters?			
(3) Sampling method used to obtain a representative sample of each H.W.?			
(4) Frequency which each analysis will be repeated?			
(5) For off-site facilities, the analysis that generators have agreed to supply?			
(6) The methods which will be used to meet the additional analysis requirements for:			
Tanks? (265.193)			
Surface Impoundments? (265.225)			
Waste Piles? (265.252)			
Land Treatment? (265.273)			
Liquids in landfills? (265.314)			
Incinerators? (265.341)			
Thermal Treatment? (265.375)			
Other treatment? (265.402)			
Land Disposal Restrictions? (268.7)			

Complete applicable checklist on each unit.

For off-site facilities, does the plan contain the following elements: 265.13(c)-			
(1) Description of procedures used to identify each movement of H.W.?		N/A	
(2) Description of the sampling method used to obtain a representative sample of the H.W.?			

	Yes	No	Comments
Unless exempt under 265.14(a)(physical contact or disturbance of the waste and unit will not cause harm), do security measures include:			
A 24-hour surveillance system? 265.14(b)(1) or:	✓		
Artificial or natural barriers that complete enclose the facility? 265.14(b)(2)(i) and:	✓		
Means to control entry onto the active portions of the facility at all times? 265.14(b)(2)(ii)	✓		
Are signs with the legend "Danger-Unauthorized Personnel Keep Out" or equivalent posted that are: 265.14(c)			
At each entrance and any other approach to active portions of facility?	✓		
Legible from at least 25 feet away?	✓		
Written in English and any other language predominant in the surrounding area?	✓		
General Inspection Requirements:			
Does the facility inspect for malfunctions, deterioration, operator errors, and H.W. discharges often enough to correct problems before they cause harm? 265.15(a)	✓		
Does the facility follow a written inspection schedule? 265.15(b)(1)	N/A		NOT A GENERATOR REQUIREMENT
Is the schedule kept at this facility? 265.15(b)(2)			
Does the schedule identify types of problems that are expected from malfunction, operator error, deterioration or discharges of all: 265.15(b)(3)			
monitoring equipment?			
safety, emergency equipment?			
security devices?			
operating and structural equipment?			

	Yes	No	Comments
Does the schedule include: 265.15(b)(4)			
The frequency of inspection for each item?	N/A		
Daily inspections for loading and unloading areas?			
The frequencies required by each H.W. unit?			
Has the facility taken immediate remedial action to correct hazards revealed on an inspection? 265.15(c)			
Are inspections recorded in an inspection log? Does the log include: 265.15(d)			
Date and time of inspection?			
Name of inspector?			
Observations noted?			
Date and nature of repairs or other remedial actions?			
Are inspection records kept for at least 3 years? 265.15(d)			
Does the facility have a H.W. personnel training program? 265.16(a)(1)	✓		
Is it directed by a person trained in H.W. management procedures? 265.16(a)(2)	✓		
Does the program include training in emergency procedures including contingency plan implementation? 265.16(a)(3)- and:	✓		
(i) Procedures for using, inspecting, repairing and replacing emergency and monitoring equipment?	✓		
(ii) Key parameters for automatic waste feed cut-off systems?	✓		
(iii) Communication or alarm systems?	✓		
(iv) Response to fire or explosions?	✓		
(v) Response to ground-water contamination incidents?	✓		
(vi) Emergency shutdown of operations?	✓		
Are new personnel supervised until training is completed? 265.16(b)	✓		

	Yes	No	Comments
Do new personnel complete the training within 6 months? 265.16(b)	✓		
Do personnel take part in an annual review of the initial training? 265.16(c)	✓		
Do personnel training records include for each H.W. position: 265.16(d)-			
(1) Job title and name of person filling the position?		✓	
(2) Job Description?		✓	
(3) Description of required H.W. training?		✓	
(4) Documentation that H.W. training or job experience required has been completed?		✓	
Are training records kept for current employees until closure, and past employees for at least three years? 265.16(e)	✓		
Requirements for ignitable, reactive, or incompatible wastes:			
Are precautions taken to prevent accidental ignition or reaction, including: 265.17(a)			
Separation and protection from ignition sources?	✓		
No smoking signs in hazard areas?	✓		
Is the T/S/D of ignitable, reactive or incompatible waste conducted so that it does not: 265.17(b)-			
(1) Generate extreme heat or pressure, fire or explosion, or violent reaction?	✓		
(2-3) Produce uncontrolled toxic or flammable mists, fumes, dusts or gases?	✓		
(4) Damage structural integrity of H.W. containment devices?	✓		
(5) Otherwise threaten human health or the environment?	✓		

Preparedness and Prevention:
(Part 265 Subpart C)

	Yes	No	Comments
Location Standards:			
Has the facility not placed H.W. in a salt dome, salt bed formation, underground mine or cave? 265.18	✓		
Is the facility maintained and operated to minimize the possibility of fire, explosion, or releases of H.W. or H.W. constituents to air, soil, or surface water which could threaten human health or the environment? 265.31		✓	THE LIQUID WASTE FROM THE BCW FLOWS THROUGH AN UNLINED EARTHEN CHANNEL TO A SURFACE IMPOUNDMENT. THE CENTRAL STORAGE IS IN COMPLIANCE WITH THIS REGULATION
Does the facility have the following equipment where applicable: 265.32-			
(a) Internal communications or alarm system capable of providing immediate emergency instruction?		✓	
(b) Telephone or 2-way radios at the scene of operation?	✓		
(c) Portable fire extinguishers with water, foam, inert gas, dry chemical; spill control and decontamination equipment?		✓	EYE WASH INOPERABLE BUT WAS REPAIRED ON THE SPOT
(d) Water at adequate volume and pressure, or foam producing equipment, or automatic sprinklers, or water spray systems?	✓		
Does the facility test and maintain all emergency equipment in operable condition? 265.33		✓	NOT THE EYE WASH
Do personnel in areas where H.W. is being handled have immediate access to internal alarm or communications systems, or voice or visual contact with another employee? 265.34(a)	✓		
Can personnel that operate the facility while alone immediately access external emergency assistance? 265.34(b)	✓		
Is there adequate aisle space for unobstructed movement of fire, spill control and decontamination equipment in an emergency? 265.35	✓		

Preparedness and Prevention: - Continued
(Part 265 Subpart C)

	Yes	No	Comments
Arrangements With Local Authorities:			
Has the facility attempted to make the following arrangements:			
Arrangements to familiarize police, fire dept., and emergency response teams with H.W. operations? 265.37(a)(1)	✓		
Agreements designating primary emergency authority? 265.37(a)(2)	✓		
Agreements with State emergency response teams, contractors and equipment suppliers? 265.37(a)(3)	✓		
Arrangements to familiarize local hospitals with the properties of H.W. and the types of potential injuries and illnesses from exposure to H.W.? 265.37(a)(4)	✓		
Did the facility document in the operating record any refusal by State or local authorities to enter into such arrangements? 265.37(b)	N/A		

Generators - General:
(Part 262 Subpart A)

	Yes	No	Comments
Has the generator of solid wastes made a hazardous waste (H.W.) determination by determining if the waste is: 262.11-			
(a) Excluded from regulation under 261.4?	✓		
(b) Listed as a H.W. in 261 Subpart D?	✓		
(c) Exhibits a characteristic identified in 261 Subpart C by either:			
(1) Testing the waste?	✓		
(2) Applying knowledge of the hazard characteristic of the waste in light of the materials or the processes used?	✓		
(d) Excluded or restricted under 264, 265, or 268, if determined hazardous?	✓		
Is the waste an exempt recyclable material: 261.6(a)(3)-			
(i) Industrial ethyl alcohol that is reclaimed (unless provided otherwise in an international agreement)?	N/A		
(ii) Used batteries or cells returned to the manufacturer for regeneration?			
(iii) Used oil not burned for energy recovery?			
(iv) Scrap metal?			
(v-ix) Specific steel (K087) and petroleum refinery production wastes?			
If the waste is any of the following recyclable materials, complete Parts 270 (permits and notifications), and 266 Subparts A-G of the TSD checklists: 261.6(a)(2)-			
(i) Those used in a manner constituting disposal (Subpart C)?	N/A		
(ii) H.W.s burned for energy recovery in boilers and industrial furnaces not regulated as an incinerator (Subpart D)?			
(iii) H.W. characteristic used oil that is burned as above (Subpart E)?			
(iv) Those from which precious metals are reclaimed (Subpart F)?			
(v) Spent lead-acid batteries that are reclaimed (Subpart G)?			

Conditionally Exempt Small Quantity Generators
(Part 261)

	Yes	No	Comments
Does the facility qualify as a conditionally exempt small quantity generator each calendar month by:			
Generating less than 100 kgs and acumulating less than 1000 kgs of H.W. on site? 261.5(a),(g) or:		✓	
Generating less than 1 kg of acute H.W., or 100 kgs of acute H.W. contaminated soil or spill residues? 261.5(e)(1-2)		✓	
Did the quantity determination include all listed and characteristic wastes generated except: 261.5(d)-			
(1) H.W. removed from on-site storage?	N/A		
(2) H.W. produced by on-site treatment or reclamation of H.W. that was already counted once?			
(3) Spent materials that have already been counted once and that are reclaimed, reused, and subsequently generated on site? or:			
H.W. exempted from regulation? 261.5(c)			
Has the conditionally exempt small quantity generator treated or disposed of the H.W. in an on-site facility, or ensured delivery to an off-site U.S. TSD, either of which is: 261.5(f,g)(3)-			
(i) Permitted under Part 270?	N/A		
(ii) In interim status under 265 and 270?			
(iii) Authorized by an approved state under Part 271?			
(iv) Permitted, licensed, or registered by a state to manage municipal or industrial solid waste? or:			
(v) A facility which:			
(A) Legitimately uses, reuses, recycles, or reclaims the waste? or:			
(B) Treats its waste prior to use, reuse, recycling, or reclaiming?			

For any month that the generator did not meet these requirements, go to next page.

Generators of Between 100 and 1,000 kg/month
(Part 262)

	Yes	No	Comments
Has the generator submitted a Notification of Hazardous Waste Activity (EPA Form 8700-12) and obtained an EPA ID number before handling H.W.? 262.12(a)		✓	THE NOTIFICATION FAILS TO IDENTIFY THE HAZARDOUS WASTE LISTED IN THE ANNUAL REPORT (ATTACHMENT 20) + FAILS TO IDENTIFY THE EP TOX, DOC 7, FROM THE BCW SYSTEM.
Have they offered H.W. only to transporters or TSDs with an EPA ID#? 262.12(c)	✓		
Does the facility generate between 100 and 1000 kg of H.W., or no more than 1 kg of acute H.W., each calendar month?		✓	
IF no, go to page 5.			
Is the 100-1000 kg/mo. generator's H.W. reclaimed under a contractual agreement? 262.20(e)- If no, see Manifests.	N/A		
(1) Does the waste reclaimation contract: (i) Specify the type of waste and frequency of shipments?			
(ii) Is the transport vehicle owned and operated by the recycler/reclaimer?			
(2) Did the generator keep a copy of the contractual agreement for three years after the agreement ended?			
Did the 100-1000 kg/mo. generator keep for three years: 262.44			
Copies of signed manifests?			
Waste analysis, test results, or H.W. determinations (262.11) for three years after the waste was last sent for on- or off-site treatment, storage, or disposal?			
The 100-1000 kg/mo. generator may accumulate H.W. on site for up to 180 days* without interim status provided they: 262.34(d)			
(1) Accumulate no more than 6000 kgs of H.W. on site at any time?			
(2) Complied with requirements for storage in containers, 265 Subpart I (except for the 50 foot rule (265.176))?			
(3) Complied with 265.201, storage in tanks (attached)?			

* 270 days if they must transport more than 200 miles to TSD facility. 262.34(e)

Generators of Between 100 and 1,000 kg/month
(Part 262)

	Yes	No	Comments
(3) (Cont.) Complied with requirements for Subpart C, preparedness and prevention?	N/A		
Clearly marked the date accumulation started on each container?			
Labelled each container and tank with the words "Hazardous Waste"?			
Does the generator have at least one emergency coordinator (E.C.) on site or immediately available at all times? 262.34(d)(4)(i)			
Is the following information posted next to the telephone: 262.34(d)(4)(ii)-			
(A) E.C.'s name and phone number?			
(B) Location of fire extinguishers, spill control material, and any fire alarms?			
(C) If no direct alarms, the phone number of the fire department?			
Are all employees are familiar with their jobs' proper waste handling and emergency procedures? 262.34(d)(iii)			
If an emergency has occurred, has the emergency coordinator: 262.34(d)(iv)-			
(A) Tried to extinguish the fire, or called the fire department?			
(B) In the event of a spill, contained the flow of H.W., and cleaned up as soon as possible?			
(C) Determined if the emergency is threatening human health or surface water outside the facility, and if so called the National Response Center at (800)424-8802 and reported:			
(1) The generator's name, address, and ID #?			
(2) Date, time, and type of incident?			
(3) Quantity and type of H.W. involved?			
(4) Extent of any injuries?			
(5) Estimated quantity and disposition of any recovered materials?			
If the generator exceeded the applicable storage time or quantity limit without an EPA extension, did they comply with all TSD storage facility regulations? 262.34(e-f)			

Generators:
(Part 262)

	Yes	No	Comments
Manifests: 262.20-			
(a) Does the generator prepare a complete manifest according to the instructions (see Appendix) before transporting H.W. off-site?	✓		
(b) Does the generator designate on the manifest one facility which is permitted to handle H.W.?	✓		
(c) Has the facility designated an emergency alternate facility? or:	✓		
(d) Instructed the transporter to return the waste to the generator in the event an emergency prevents delivery?	✓		
Did the generator use the supplied manifest required by a consignment State: 262.21-			
(a) Where the receiving facility is? or, if not provided by that State:	✓		
(b) Where the generating facility is?	N/A		
(c) If not provided by either State, the EPA form from another source?	N/A		
Did the manifest consist of enough copies? 262.22	✓		
Did the generator: 262.23(a)			
(1) Sign the manifest by hand?	✓		
(2) Obtain the signature of initial transporter and date of acceptance on manifest?	✓		
(3) Keep one copy of the manifest (per 262.40(a))?	✓		
Did the generator give the remaining copies of the manifest to the transporter? 262.23(b)	✓		
If the shipment was sent by water or rail, was 262.23 complied with?	N/A		

Pre-Transport Requirements:
(262 Subpart C)

	Yes	No	Comments
Is waste packaged in accordance with DOT packaging regulations (49 CFR 173, 178-9)? 262.30	✓		
Are waste packages labeled in accordance with DOT regulations (40 CFR 172.101)? 262.31	✓		
Are containers marked in accordance with DOT regulations (49 CFR 172.101)? 262.32(a) including:	✓		
Proper shipping name [table column 2]?	✓		
Proper ID number [table column 3A]?	✓		
Proper ORM designation for containers of ORM-A,B,C,D or E wastes?	✓		
Are containers of 110 gallons or less marked with the following words? 262.32(b)			
HAZARDOUS WASTE-Federal Law Prohibits Improper Disposal. If found, contact the nearest police or public safety authority or the U.S. Environmental Protection Agency. Generators Name & Address _____ Manifest Document Number _____	✓		
Does the generator placard or offer the initial transporter the appropriate placards (49 CFR 172 Subpart F)? 262.33	✓		
Accumulation Time:			
The generator may accumulate at or near the point of initial generation up to 55 gals of H.W., or one quart of acutely hazardous waste, provided: 262.34(c)(1)-			
(i) H.W. from containers not in good condition or leaking were transferred into good containers?	✓		
Containers are compatible with the H.W. stored in them?	✓		
Containers are stored closed?	✓		
(ii) The containers are marked either with the words "Hazardous Waste" or labels that identify the contents?	✓		

IV. Pre-Transport Requirements:
(Part 262 Subpart C)

	Yes	No	Comments
If the generator does not have interim status (as a TSD storage facility), have they accumulated H.W. on-site for less than 90 days? 262.34(a)		✓	CURRENTLY, NCSJS IN COMPLIANCE (ATTACHMENT 17). BETWEEN 10-10-90 AND 2-18-90, 34 DRUMS WERE STORED FOR AT LEAST 181 DAYS (ATTACHMENT 18 & 19)
Are containers visibly marked with the date accumulation started? 262.34(a)(2)	✓		
Is each container or tank clearly marked with the words "Hazardous Waste"? 262.34(a)(3)	✓		
Does the generator comply with the requirements of 40 CFR Part 265: 262.34(a)(1), -(4)			
Subpart I for the use and management of containers?	✓		
Subpart J for tanks (except 265.197(c), closure of tanks without secondary containment, and 265.200)?	N/A		
265.111 for tank closure performance standards?	N/A		
265.114 for tank decontamination after closure?	N/A		
Subpart C for preparedness and prevention?			
Subpart D for contingency plan and emergency procedures?			
265.16 for personnel training?		✓	
If the generator has stored H.W. on-site for more than 90 days, have they: 262.34(b)			
Been granted an extension from the EPA?		✓	
or:			
Complied with the 40 CFR Parts 264 and 265 and the permitting requirements in Part 270 of RCRA?			

Recordkeeping and Reporting:
(Part 262 Subpart D)

	Yes	No	Comments
Are the following kept for at least three years: 262.40-			
(a) Manifest signed by the receiving facility?	✓		
(b) Biennial Reports and Exception Reports?	✓		
(c) Test results, waste analysis or other determinations made in accordance with 262.11?	✓		
Biennial Report:			
If the facility has shipped any waste off-site to a U.S. TSD, have they submitted a Biennial Report to the RA by March 1 of each even numbered year? 262.41(a)	✓		
Was the report submitted on EPA Form 8700-13A and cover generator activities during the previous calendar year? 262.41(a)	✓		
Does the report include the following information: 262.41(a)-			
(1) EPA ID No., name and address of the generator?	✓		
(2) Calendar year covered by the report?	✓		
(3) The EPA ID No., name, and address for each off-site U.S. TSD to which H.W. was shipped during the year?	✓		
(4) Name and EPA ID No. of each transporter used during the year to ship to a U.S. TSD?	✓		
(5) Description, EPA hazardous waste No., DOT hazard class and quantity of each H.W. shipped off-site to a U.S. TSD?	✓		
Was this information listed by EPA ID No. of each off-site U.S. TSD to which H.W. was shipped?	✓		

Recordkeeping and Reporting: - Continued
(Part 262 Subpart D)

	Yes	No	Comments
(6) A description of the efforts undertaken during the year to reduce the volume and toxicity of waste generated?	✓		
(7) A description of the changes in volume and toxicity actually achieved during the year in comparison to previous years (back to 1984 if available)?	✓		
(8) The signed certification?	✓		
Exception Reporting: 262.42			
(a) For a generator that has not received a signed copy of the manifest from the designated facility within 35 days, has the generator determined the status of the H.W.?	N/A		
(b) For a generator that has not received a signed copy of the manifest within 45 days, has the generator submitted an Exception Report to the RA?			
Did the Exception Report include: 262.42(b)-			
(1) A legible copy of the manifest?			
(2) A signed cover letter explaining the efforts taken to locate the H.W. and the results of those efforts?			

265: I1 (S01)
CONTAINERS &

ACCUMULATION AREAS

	Names of accumulation areas		
	CENTRAL	Maintenance Che New Unit 1	Paint Shop
Accumulation Time: Less than 55 gallons			
The generator may accumulate at or near the point of initial generation up to 55 gals of H.W., or one quart of acutely hazardous waste, provided:			
262.34(c)(1)(ii) The containers are marked either with the words "Hazardous Waste" or labels that identify the contents? AND	N/A	yes	yes
The containers are in good condition 265.171. AND		yes	yes
The containers are compatible with the waste 265.172. AND		yes	yes
The containers are stored closed 265.173(a). AND		yes	yes
The containers must not be opened, handled or stored in a manner which may rupture the container or cause it to leak 265.173(b).		yes	yes
Accumulation Time: greater than 55 gallons			
Are containers visibly marked with the date accumulation started? 262.34(a)(2).	yes	N/A	N/A
If the generator does not have interim status (as a TSD storage facility), have they accumulated H.W. on-site for less than 90 days? 262.34(a).	yes		

	Names of accumulation areas		
	Central Storage	Machine Area	Paint Shop
Does the generator comply with the requirements of 40 CFR Part 265: Subpart I for the use and management of containers? 262.34(a)(1)-(4) listed below.			
Does the facility transfer H.W. from containers not in good condition or leaking to containers in good condition? 265.171.	yes	N/A	N/A
Are containers compatible with the H.W. stored in them? 265.172.	yes		
Are containers stored closed? 265.173(a).	yes		
Are containers managed to prevent rupture or leakage? 265.173(b).	yes		
Are containers inspected weekly for leaks and deterioration? 265.174.	yes		
Are ignitable or reactive wastes stored at least 50 feet from the facility's property line? 265.176.	yes		
Are incompatible wastes stored in separate containers? 265.177(a).	yes		
Is H.W. not placed in unwashed containers that previously held an incompatible waste or material? 265.177(b).	yes		
Are containers holding H.W. that is incompatible with any waste or materials stored nearby in other containers, separated from the incompatibles by sufficient distance or protected by means of a dike, berm, wall, or other device? 265.177(c).	yes		
Does the generator comply with the requirements with 40 CFR Part 265.37: arrangements with local authorities?	See main checklist		
Does the generator comply with the requirements of 40 CFR Part 265: Subpart D for contingency plan and emergency procedures?	See main checklist		
Does the generator comply with the requirements of 40 CFR Part 265.16 for personnel training in emergency procedures?	See main checklist		

	Names of accumulation areas			
	Central Stores	Maintenance Cen	Paint Shop	
Does the generator comply with the requirements of 40 CFR Part 265: Subpart C for Preparedness and Prevention listed below.				
Does the facility have the following equipment where applicable: 265.32-				
(a) Internal communications or alarm system capable of providing immediate emergency instruction?	No	N/A	N/A	
(b) Telephone or 2-way radios at the scene of operation?	yes			
(c) Portable fire extinguishers with water, foam, inert gas, dry chemical; spill control and decontamination equipment?	Eye Wash was inoperative, but repaired that day			
(d) Water at adequate volume and pressure, or foam producing equipment, or automatic sprinklers, or water spray systems?	yes			
Are the systems and equipment listed above tested? 265.33.	eye wash was not			
Do all personnel have immediate access to the systems and equipment listed in 265.32 (a)-(d)?	yes			
Is there adequate aisle space for unobstructed movement of fire, spill control and decontamination equipment in an emergency? 265.35.	yes			

Salt River Project
WATER POWER

BOX 1980 PHOENIX, ARIZONA 85001

TELEPHONE 273-5900

August 13, 1980

ATTACHMENT 3

Environmental Protection Agency, Region IX
215 Fremont Street
San Francisco, California 94105

Attention: A-3-2

Gentlemen:

The Resource Conservation and Recovery Act (RCRA)(P.L. 94-580) regulations published on May 19, 1980 in the Federal Register (Vol. 45, No. 98) identify and list hazardous wastes while the regulations published on February 16, 1980 (Vol. 45, No. 39) require all persons who manage hazardous wastes to submit a preliminary notification of hazardous waste activities to the Environmental Protection Agency (EPA). Currently, Salt River Project (SRP) is continuing to investigate waste streams and facilities as a result of RCRA and, although we have not established whether we will need to apply for any hazardous waste permits, it is our intention and wish in the interim to comply with the preliminary notification regulation set forth in Section 3010 of RCRA. Accordingly, SRP hereby files a notification of waste handling activities.

Attached are six Notification of Hazardous Waste Activity forms (EPA Form 8700-12) for various facilities owned by SRP. Additionally, a table is included providing a description of the waste managed at each facility and the quantity generated, treated, stored, disposed or shipped. You will note that the quantities generated are small and probably qualify for exclusion from regulation (40 CFR 261.5(a)); however, the wastes are placed in sealed, evaporation ponds and may accumulate in quantities greater than the exclusion level and thereby fall under the purview of the regulations. It is primarily due to this ambiguity that we have decided to file this notification.

On a related matter, a letter commenting on the conflict in the definition of "disposal" (40 CFR 260.10(a)(14)) in the RCRA regulations was sent to EPA by SRP on July 8, 1980 (copy attached). The conflict centers on the use of evaporation ponds. Evaporation ponds are specifically designed to dispose of wastewater while simultaneously preventing release of incompatible wastes to groundwaters and are commonly used in dry climates such as the southwest. In accordance with the definition in the regulations, these ponds are not used for "disposal"; however, neither are they used for "storage" (40 CFR 260.10(a)(66)) since waste, without the water, will remain permanently after closure.

We recognize that this notification is not binding on SRP should we later find that one or all the facilities listed will not require a hazardous waste facility

permit. If you have questions regarding this notification, please contact William E. Davis at (602) 273-2881.

Very truly yours,

Alfred J. Cotton for L. Michael

Leroy Michael, Jr.
Assistant General Manager

LMJ/WED:rsg
Attachments

DESCRIPTION OF SIX SALT RIVER PROJECT FACILITIES' WASTE MANAGEMENT ACTIVITIES

LOCATION	FACILITY	WASTE DESCRIPTION	APPROXIMATE QUANTITY PER MONTH				
			GENERATED	TREATED	STORED	DISPOSED(1)	SHIPPED
Agua Fria Steam Plant 75th Ave. and Northern Phoenix, Arizona	Surface Impoundment	Wastes carried away during periodic boiler cleaning include traces of barium, cadmium, lead, nickel, silver and arsenic.	Variable	NA(2)	NA	Unknown	NA
	Drums	Insulating material with variable amounts of asbestos	± 8 kg	NA	NA	NA	± 8 kg
Kyrene Steam Plant South Kyrene Road Tempe, Arizona	Surface Impoundments	Formaldehyde	2 L	NA	NA	Unknown	NA
	Drums	Insulating material with variable amounts of asbestos	± 15 kg	NA	NA	NA	± 15 kg
Santan Steam Plant Warner and Val Vista Roads Gilbert, Arizona	Surface Impoundments	Wastes carried away during periodic boiler cleaning include traces of barium, cadmium, lead, nickel, silver and arsenic.	Variable	NA	NA	Unknown	NA
	Dry wells for minor leaks from connections	Sulfuric acid and sodium hydroxide	Variable	NA	NA	Unknown	NA
Navajo Generating Station Page, Arizona	Surface Impoundments	NALCO 8320 (46% chromate)	38 L	NA	NA	Unknown	NA
		Wastes carried away during periodic boiler cleaning include traces of barium, cadmium, lead, nickel, silver and arsenic.	Variable	NA	NA	Unknown	NA

(1) See Cover Letter
(2) Not Applicable

DESCRIPTION OF SIX SALT RIVER PROJECT FACILITIES' WASTE MANAGEMENT ACTIVITIES

LOCATION	FACILITY	WASTE DESCRIPTION	APPROXIMATE QUANTITY PER MONTH				
			GENERATED	TREATED	STORED	DISPOSED(1)	SHIPPED
Coronado Generating Station St. Johns, Arizona	Surface Impoundment	Wastes carried away during periodic boiler cleaning include traces of barium, cadmium, lead, nickel, silver and arsenic.	Variable	NA	NA	Unknown	NA
Material Reclamation 1616 E. Lincoln Phoenix, Arizona	Drums	Asbestos (Brake-shoe grinder)	2 kg	NA	2 kg	NA	2 kg
		Insulating material with variable amounts of asbestos	NA	NA	± 23 kg	NA	± 23 kg
		MITCO-FIL (Tire Fill) with isocyanate and polyether polyol	69 L	NA	69 L	NA	69 L
	Bulk	Waste oils, solvents, grease and thinners (all recycled)	Variable	NA	Variable	NA	Variable
All Facilities	General Cleaning	Commercial Solvent contains methylene chloride, perchlor-ethylene and aliphatic petroleum distillates. Approximately 740 L per month dispensed. (National Chemsearch Co. SS-25)	(3)	NA	NA	(3)	NA

(1) See Cover Letter
(3) Evaporates in Field shortly after use.

Please print or type with ELITE type *(12 characters/inch)* in the unshaded areas only. 18 AUG 1980

Form Approved OMB No. 158-S79016
GSA No. 0246-EPA-OT

EPA — U.S. ENVIRONMENTAL PROTECTION AGENCY
NOTIFICATION OF HAZARDOUS WASTE ACTIVITY

INSTALLATION'S EPA I.D. NO.

I. NAME OF INSTALLATION

II. INSTALLATION MAILING ADDRESS

III. LOCATION OF INSTALLATION

PLEASE PLACE LABEL IN THIS SPACE

INSTRUCTIONS: If you received a preprinted label, affix it in the space at left. If any of the information on the label is incorrect, draw a line through it and supply the correct information in the appropriate section below. If the label is complete and correct, leave Items I, II, and III below blank. If you did not receive a preprinted label, complete all items. "Installation" means a single site where hazardous waste is generated, treated, stored and/or disposed of, or a transporter's principal place of business. Please refer to the INSTRUCTIONS FOR FILING NOTIFICATION before completing this form. The information requested herein is required by law *(Section 3010 of the Resource Conservation and Recovery Act).*

DETACH

FOR OFFICIAL USE ONLY

COMMENTS: C

INSTALLATION'S EPA I.D. NUMBER: FAZD 074452426 T/A 21

APPROVED:

DATE RECEIVED (yr., mo., & day): 80 08 18 — 18 AUG 1980

I. NAME OF INSTALLATION

SALT RIVER PROJECT NAVAJO GEN. STATION

II. INSTALLATION MAILING ADDRESS

STREET OR P.O. BOX: 3 PO BOX 1980

CITY OR TOWN: 4 PHOENIX — ST.: AZ — ZIP CODE: 85001

III. LOCATION OF INSTALLATION

STREET OR ROUTE NUMBER: 5 NAVAJO GENERATING STATION

CITY OR TOWN: 6 PAGE — ST.: AZ — ZIP CODE: 86040

IV. INSTALLATION CONTACT

NAME AND TITLE *(last, first, & job title)*: 2 DAVIS WILLIAM ENVIRON. ANALYST

PHONE NO. *(area code & no.)*: 602 - 273 - 2881

V. OWNERSHIP

A. NAME OF INSTALLATION'S LEGAL OWNER: 8

DETACH

B. TYPE OF OWNERSHIP *(enter the appropriate letter into box)*

F = FEDERAL
M = NON-FEDERAL

M

VI. TYPE OF HAZARDOUS WASTE ACTIVITY *(enter "X" in the appropriate box(es))*

- [X] A. GENERATION
- [ ] B. TRANSPORTATION *(complete item VII)*
- [X] C. TREAT/STORE/DISPOSE
- [ ] D. UNDERGROUND INJECTION

VII. MODE OF TRANSPORTATION *(transporters only – enter "X" in the appropriate box(es))*

- [ ] A. AIR
- [ ] B. RAIL
- [ ] C. HIGHWAY
- [ ] D. WATER
- [ ] E. OTHER *(specify)*:

VIII. FIRST OR SUBSEQUENT NOTIFICATION

Mark "X" in the appropriate box to indicate whether this is your installation's first notification of hazardous waste activity or a subsequent notification. If this is not your first notification, enter your Installation's EPA I.D. Number in the space provided below.

- [X] A. FIRST NOTIFICATION
- [ ] B. SUBSEQUENT NOTIFICATION *(complete item C)*

C. INSTALLATION'S EPA I.D. NO.

IX. DESCRIPTION OF HAZARDOUS WASTES

Please go to the reverse of this form and provide the requested information.

S	I.D. – FOR OFFICIAL USE ONLY	T/A	C
W	AZ D074452426	2	1
1	2 – 13	14	15

IX. DESCRIPTION OF HAZARDOUS WASTES *(continued from front)*

A. HAZARDOUS WASTES FROM NON–SPECIFIC SOURCES. Enter the four–digit number from 40 CFR Part 261.31 for each listed hazardous waste from non–specific sources your installation handles. Use additional sheets if necessary.

1	2	3	4	5	6
7	8	9	10	11	12

B. HAZARDOUS WASTES FROM SPECIFIC SOURCES. Enter the four–digit number from 40 CFR Part 261.32 for each listed hazardous waste from specific industrial sources your installation handles. Use additional sheets if necessary.

13	14	15	16	17	18
19	20	21	22	23	24
25	26	27	28	29	30

C. COMMERCIAL CHEMICAL PRODUCT HAZARDOUS WASTES. Enter the four–digit number from 40 CFR Part 261.33 for each chemical substance your installation handles which may be a hazardous waste. Use additional sheets if necessary.

31	32	33	34	35	36
37	38	39	40	41	42
43	44	45	46	47	48

D. LISTED INFECTIOUS WASTES. Enter the four–digit number from 40 CFR Part 261.34 for each listed hazardous waste from hospitals, veterinary hospitals, medical and research laboratories your installation handles. Use additional sheets if necessary.

49	50	51	52	53	54

E. CHARACTERISTICS OF NON–LISTED HAZARDOUS WASTES. Mark "X" in the boxes corresponding to the characteristics of non–listed hazardous wastes your installation handles. *(See 40 CFR Parts 261.21 – 261.24.)*

☐ 1. IGNITABLE (D001) ☐ 2. CORROSIVE (D002) ☐ 3. REACTIVE (D003) ☒ 4. TOXIC (D000)

X. CERTIFICATION

I certify under penalty of law that I have personally examined and am familiar with the information submitted in this and all attached documents, and that based on my inquiry of those individuals immediately responsible for obtaining the information, I believe that the submitted information is true, accurate, and complete. I am aware that there are significant penalties for submitting false information, including the possibility of fine and imprisonment.

SIGNATURE	NAME & OFFICIAL TITLE *(type or print)*	DATE SIGNED
Alfred J. Cattoro	Manager, Environmental Service Dept.	8/25/80

EPA Form 8700-12 (6-80) REVERSE

Original Letter Signed: 8/13/80

DETACH

DETACH

alt River Project
WATER & POWER

BOX 1980 PHOENIX, ARIZONA 85001 TELEPHONE 273-5900

July 8, 1980

Docket Clerk (Docket No. 3000)
Office of Solid Waste (WH-562)
U. S. Environmental Protection Agency
401 M Street S. W.
Washington, D. C. 20460

Dear Sir:

RE: RESOURCE CONSERVATION AND RECOVERY ACT REGULATIONS

This letter is sent in response to a set of recently published interim final regulations under the Resource Conservation and Recovery Act (RCRA). Specifically, definition number 14, "Disposal" under Subpart B, Section 260.10 appears to conflict with other portions of the regulations.

The preamble to Part 260 on Page 33066 (45 Fed. Reg. 33066, May 19, 1980) discusses the intent of the law and the regulations when it speaks of disposal facilities: "To ensure that (these) facilities are designed, constructed, and operated in a manner which protects human health and the environment, Section 3004 of RCRA directs EPA to promulgate technical, administrative, monitoring and financial standards (for them)." (Emphasis added) Presumably the standards ultimately promulgated by EPA will result in disposal facilities which protect human health and the environment from hazardous waste.

The definition of disposal in Section 1004 (3) of RCRA and in the interim final regulations states: "Disposal means the discharge, deposit, injecting, dumping, spilling, leaking or placing of solid waste or hazardous waste into or on any land or water so that such solid waste or hazardous waste or any constituent thereof may enter the environment or be emitted into the air or discharged into the waters, including ground waters." (Emphasis added) Disposal in this sense is described as a situation where contact with a hazardous waste may occur.

Herein lies the conflict I perceive. On one hand, the intent of the regulations is to prevent contact with hazardous waste by promulgating standards for proper disposal while, on the other hand, the definition presupposes that a disposer may expose the public and the environment to the hazardous waste. A disposer, by accepting the definition of disposal and following the EPA standards, must admit to risking human health and a release of hazardous waste to the environment when disposing of a hazardous waste.

To resolve this conflict, I suggest the term 'disposal' be used in its customary manner in the wastewater management field. Inherent within

the philosophy of treatment and disposal of wastewater is the presumption of preventing the release of noxious material and not the presumption that it will occur. This use is consistent with the Webster New Collegiate Dictionary definition of 'disposal' as the "orderly placement or distribution" and 'dispose of' as "to place, distribute or arrange esp. in an orderly way" and "to deal with conclusively." The definition at Section 260.10 (14) could be revised accordingly: Disposal means the deposit, injection, dumping or placing of any solid waste or hazardous waste into or on any land or water so that such solid waste or hazardous waste or any constituent thereof which could adversely affect human health or the environment is prevented from entering the environment or from being emitted into the air or discharged into any waters, including ground waters. This revision removes words like "spilling" and "leaking" which are not consistent with the meaning of 'orderly placement.'

The definition of "discharge" could be revised as follows to include those situations where the hazardous waste is out of the control of a generator, transporter, or disposer and may enter the environment: Discharge or hazardous waste discharge means the accidental or intentional spilling, leaking, pumping, pouring, emitting, emptying or dumping of hazardous wastes so that such hazardous wastes or any constituent thereof may enter the environment or be emitted into or on any land or water.

These changes should be made in order to remove the stigma attached to disposal of hazardous waste which implies that regardless of the care and attention given a disposal facility, EPA still considers a disposer as risking human health and the environment by receiving hazardous waste at his facility. "Cradle to grave" regulation may be desirable but present language deprives disposers of the 'grave' and leaves the situation forever in limbo.

We appreciate the opportunity to comment on these regulations. If there are questions or comments, please contact me at (602) 273-2881.

Sincerely,

William E. Davis

William E. Davis
Environmental Services Department

WED:rsg

xc: Mr. Bill Williams, Bureau of Waste Control
Wald, Harkrader and Ross, Attention: Dave Weinburg

file

Salt River Project

WATER ◆ POWER

BOX 1980 PHOENIX, ARIZONA 85001

TELEPHONE 273-5900

November 18, 1980

ATTACHMENT 4

Mr. Bill Wilson
Environmental Protection Agency, Region IX
Attention A-3-2
215 Fremont Street
San Francisco, California 94105

Dear Mr. Wilson:

RE: EPA Identification Numbers AZDO 74452426 - deleted TSD 11/26
deleted TSD 11/26 - AZDO 78986643 and AZDO 63259378

On August 13, 1980, the Salt River Project (SRP) filed a notification of waste handling activities in accordance with Section 3010 of the Resource Conservation and Recovery Act (RCRA). At the time of this notification, we had not established whether we needed to apply for any hazardous waste permits.

Investigations of each SRP facility included waste inventories (i.e. listing of products used, wastes stored, treated or disposed and analysis of chemical transformations) and waste sampling (i.e. waste streams, ponds, sludges and wells). An existing manifest system enabled us to ascertain the quantity of known hazardous wastes stored and transported.

These investigations were completed in early November and revealed that in all instances, insufficient quantities of hazardous wastes were handled to require SRP to file a permit application for its facilities (40 CFR Part 261, Subpart A, Section 261.5). The details of this investigation are contained in the attached data summary.

It is our belief that it is not necessary for SRP to file for a RCRA hazardous waste permit; however, if your review of the attached data sheets produces a different conclusion, please contact us. Meanwhile, we will continue to comply with all applicable regulations and the spirit of RCRA.

Very truly yours,

William E. Davis

William E. Davis
Environmental Services Department

WED:rsg
Enclosures

DATA SUMMARY

EPA I.D. Number - AZDO 74452426
Name - Salt River Project Navajo Generating Plant
Description - Coal-Fired Generating Plant
Latitude - 36 - 55 - 54
Longitude - 111 - 26 - 36
Waste Sources - Cooling Tower Blowdown, Demineralizer, Boiler Blowdown, Boiler Cleaning, Water Softener, Degreasers, Insulation, Fly Ash, Bottom Ash, Flue-Gas Desulfurization Wastes.

Waste Substances (See Notes) - Sulfuric Acid (1), Sodium Hydroxide (1), Trace Metals (2), Hydrazine (3), Sulfamic Acid (1), Trisodium Phosphate (4), Calcium Carbonate (4), Magnesium Carbonate (4), Anion Resin (4), Cation Resin (4), Sodium Chloride (4), Hydroxyacetic Acid (1), Formic Acid (1), Perchlorethylene (5), Polyoxyethylene (5) I,I,I Trichloroethane (5), Asbestos (5), Oil and Solvent Drums (6).

Notes: (1) Acids and bases neutralize each other in waste stream (see Laboratory Analysis Sheet).

(2) Trace metals in waste waters and sludges were below detection levels (see Laboratory Analysis Sheet); therefore, below maximum concentration allowed (Sec. 261.24).

(3) Hydrazine reacts during use to form nitrogen and water and does not reach waste stream.

(4) Non-Hazardous wastes

(5) Total Quantity of Degreasers placed in drums for disposal amounts to less than one barrel per month (less than 1000 kg); waste asbestos quantity is less than one barrel per month.

(6) Returnable drums are returned to supplier for reuse; non-returnable drums are sold to Diamond Drum Service Co. of Mesa, who picks up, reconditions and sells; solvent barrels are sold at auction each month.

EPA I.D. Number - AZDO 78986643
Name - Salt River Project Coronado Generating Plant
Description - Coal-Fired Generating Plant
Latitude - 34 - 34 - 00
Longitude - 109 - 17 - 00
Waste Sources - (Same as Navajo Generating Plant)
Waste Substances - (Same as Navajo Generating Plant)

12/31

EPA I.D. Number - AZDO 63259378 → AZD 000629493
Name - Salt River Project Santan Generating Plant
Description - Fossil-Fuel-Fired Generating Plant
Latitude - 32 - 50 - 00
Longitude - 111 - 44 - 30
Waste Sources - Boiler and Cooling Tower Blowdown, Demineralizer Regenerative, Turbine Piping Insulation.

Waste Substances (See Notes) - Sodium Hydroxide (1), Sulfuric Acid (1), Hydrazine (2), Amine (3), Disodium Phosphate (3), Sodium Carbonate (3), Sulfamic Acid (1), Sodium Polyphosphates (3), Lignin Sulfonates (3), Asbestos (4), Trace Metals (5).

Notes: (1) Acids and Bases neutralize each other in waste stream (see Laboratory Analysis Sheet).

(2) Hydrazine reacts during use to form nitrogen and water and does not reach waste stream.

(3) Non-Hazardous Wastes.

(4) Waste Asbestos Quantity is less than one barrel per month (less than 1000 kg).

(5) Trace metals in waste waters and sludges were below detection levels (see Laboratory Analysis Sheet) and, therefore, below maximum concentration allowed (Sec. 261.24).

1. EPA I.D. Number - AZDO 63259378 → AZD000628560 12/31
Name - Salt River Project Agua Fria Generating Plant
Description - Fossil-Fuel-Fired Generating Plant
Latitude - 33 - 34 - 00
Longitude - 112 - 14 - 00
Waste Sources - (Same as Santan Generating Plant)
Waste Substances - (Same as Santan Generating Plant)

1. EPA I.D. Number - AZDO 63259378 → AZD000628628 12/31
Name - Salt River Project Kyrene Generating Plant
Description - Fossil-Fuel-Fired Generating Plant
Latitude - 33 - 21 - 15
Longitude - 111 - 55 - 30
Waste Sources - (Same as Santan Generating Plant)
Waste Substances - (Same as Santan Generating Plant)

1. EPA I.D. Number - AZDO 63259378
Name - Salt River Project Material Reclamation AZD000629378 12/31
Description - Recycling and Reclamation Center
Latitude - 33 - 26 - 30
Longitude - 112 - 03 - 10
Waste Sources - In addition to Resource Recycling (e.g. steel, copper, etc.) sealed drums of Asbestos from Generating Plants are brought here for transport to a Hazardous Waste Site in California. Storage does not exceed 90 days for Asbestos.

Client Salt River Project
Power Operations
P. O. Box 1980
Phoenix, Arizona 85001
Attn: Mr. John Radford

Job No.
Lab/Invoice No. 22101085
Date of Report 11/06/80

Project Trace Metal Analysis of Wastewater
Location Navjao Generating Station
Material/Specimen Wastewater Sampled By ETL/L.Conaway Date 10/13/80
Source Various Submitted By SRP/B.Davis Date 10/14/80
Test Procedure Standard Methods, 14th Ed. Authorized By SRP/RAD-00132-001 -NGS Date 11/06/80

RESULTS

Sample Navajo	pH	E.C.	Selenium mg/l	Arsenic mg/l	Mercury mg/l	Lead mg/l	Cadmium mg/l	Silver mg/l	Chromium mg/l	Barium mg/l
Ash Res.	6.3	15.6	<.5	<.5	<.05	<.1	<.05	<.05	<.05	<.5
60-Pond	8.8	15.6	<.5	<.5	<.05	<.1	<.05	<.05	0.1	<.5
35-5	7.4	14.0	<.5	<.5	<.05	<.1	<.05	<.05	<.05	<.5
Well 43	7.7	10.0	<.5	<.5	<.05	<.1	<.05	<.05	<.05	<.5
Water Supply Input	7.5	0.8	<.5	<.5	<.05	<.1	<.05	<.05	<.05	<.5
Well-19	9.8	10.3	<.5	<.5	<.05	<.1	<.05	<.05	<.05	<.5
Sludge Ret. Pond	7.9	1.3	<.5	<.5	<.05	<.1	<.05	<.05	<.05	<.5
Well-6	10.8	6.6	<.5	<.5	<.05	<.1	<.05	<.05	<.05	<.5
60-Inflow	8.0	1.6	<.5	<.5	<.05	<.1	<.05	<.05	0.42	<.5
Inflow Sludge Ret.	10.5	8.2	<.5	<.5	<.05	<.1	<.05	<.05	<.05	<.5
Well-21	7.6	12.5	<.5	<.5	<.05	<.1	<.05	<.05	<.05	<.5
AA Des	7.4	12.5	<.5	<.5	<.05	<.1	<.05	<.05	<.05	<.5
Sludge Ret.S-2	-	-	<.5	<.5	<.05	<.1	<.05	<.05	<.05	<.5
60 Sludge	-	-	<.5	<.5	<.05	<.1	<.05	<.05	<.05	<.5
35 Sludge	-	-	<.5	<.5	<.05	<.1	<.05	<.05	<.05	<.5
—	7.6	7.5	<.5	<.5	<.05	<.1	<.05	<.05	<.05	<.5
CT #3A	7.4	14.6	<.5	<.5	<.05	<.1	<.05	<.05	<.05	<.5

Copies to Client (1)

Respectfully submitted,
ENGINEERS TESTING LABORATORIES, INC.

Robert J. Bentley, Chief Chemist

Salt River Project
WATER ◆ POWER

BOX 1980 PHOENIX, ARIZONA 85001

TELEPHONE 273-5900

RECEIVED
U.S. E.P.A. REGION IX
OCT 11 2 31 PM '83

October 7, 1983

ATTACHMENT 5

CERTIFIED MAIL

Mr. William D. Wilson, Chief
Technical Assessment Section
U.S. Environmental Protection Agency
Region IX
215 Fremont Street
San Francisco, CA 94105

Dear Mr. Wilson:

The Arizona Department of Health Services (ADHS) recently notified the Salt River Project of the results of hazardous waste inspections at the Project's Navajo and Coronado Generating Stations. As a result of the inspections, it was determined that the Stations should be classified as small quantity hazardous waste generators. A copy of each ADHS notification and inspection report is enclosed.

Our records indicate that a letter was sent to you on November 18, 1980, indicating that Salt River Project did not believe it necessary to file for hazardous waste permits for its facilities. This followed an investigation of each Salt River Project facility wherein it was determined that "insufficient quantities of hazardous wastes were handled" to require permits. A copy of this transmittal is enclosed for your reference. Results of recent ADHS inspections confirm the previous determination.

Accordingly, we hereby request that the Environmental Protection Agency computer database be amended to reflect this conclusion. The current listing as a regulated "large quantity hazardous waste generator" should be changed to "small quantity generator" for each Salt River Project facility. Identification numbers assigned to these facilities are:

AZDO	74452426	Navajo Generating Station
AZDO	78986643	Coronado Generating Station
AZDO	63259378	Santan Generating Plant
AZDO	63259378	Agua Fria Generating Plant
AZDO	63259378	Kyrene Generating Plant
AZDO	63259378	Material Reclamation

Show each as small quan. gen
WDW 10/12/83

NOTIR

Date: 7-28-83

ARIZONA DEPARTMENT OF HEALTH SERVICES

Bureau of Waste Control (BWC)

GENERATOR INSPECTION REPORT

Company Name: Salt River Project - Navajo Generating Station

E.P.A. I.D.Number: AZD074452426

Street Address:

City/State/Zip: Page, AZ 86040

Phone Number: 602/645-8811

Mailing Address: P. O. Box W, Page, AZ 86040

Facility Representative(s) & Titles:

1. L. Dee Shakespear - Environmental Engineer
2. Mark Pierce - Environmental Technician
3. Tony Mackieprong - Supervisor Purchasing

A.D.H.S. Representatives(s):

1. Barry Abbott
2.

Other Participants/Agencies:

1.
2.

Type of Business: Electric Power Plant

Process Description: Burns coal to generate steam to turn turbines to generate electric power. (See attached data summary sheet furnished by Salt River Project.)

HAZARDOUS WASTE DETERMINATION(R9-8-1819.A.)

		Yes	No	N/A
262.11	Facility has made the required hazardous waste determination for all wastes generated by the facility.	X		
	Comments:			
262.40(c)	Facility has retained a copy of the waste determination documentation for at least three years from the date the waste was last sent for treatment, storage, or disposal	X		
	Comments:			

Hazardous Wastes Generated (number items, indicating generating process and quantity)

1. Caustic solution remains in barrels usually less than one inch approximately 80 barrels are disposed of one-a-year. Process will be changed to rinse barrels in future so that question will remain as to the 1,000 kg limit.
2. Mercury spills occurs the ground, rugs, etc. are placed in barrels and shipped to Chemical Waste Management.
3. Other non-routine hazardous waste that is generated is shipped to Chemical Waste Management.

Summary:

Company will ship out waste from spills, etc. as they happen in future to to ensure 1000 kg/month limit is maintained.

Note:

Facility should be listed as small generator.

From: WKHAWKIN--PABVMSYS Date and time 11/15/88 13:12:48
To: GXMCGUIR--PABVMSYS Gene McGuire

FROM: Keith Hawkins, NGS - Planning/Scheduling - ext 552
SUBJECT: bcw tank drained

in checking panvalet, the ohsar has been saved beginning with the year 1982. I found the following concerning the draining of the bcw tank.

1988: U1 = none
u2 = wo# n8842908 bcw stg tank was opened, sandblasted & recoated, and refilled, during major dates: 3/ 9/88 --- 5/12/88
u3 = none

1987 u1 = none u2 = none u3 = none

ATTACHMENT 6

1986 u1 = none u2 = none u3 = none

1985 u1 = none
u2 = drained & cleaned during major dates; 1/26/85 --- 3/ 3/85
u3 = none

1984 u1 = none u2 = none u3 = none

1983 u1 = none u2 = none u3 = none

1982 u1 = drained & cleaned during spring minor dates; 2/ 3/82 --- 3/ 5/82
u2 = drained & cleaned during spring minor dates; 1/15/82 --- 2/ 3/82
u3 = none

— TIME WAS CHARGED AGAINST THIS ACTIVITY.
— THERE IS AN INDICATION THAT THESE SYSTEMS WERE DRAINED,

this is as far back as we have ohsar records.....

Jerre, THESE RECORDS IN PANVALET ARE COPIES OF A UNIT'S COMPLETED ACTIVITY LIST FOR A GIVEN SCHEDULED OVERHAUL.

THE INSTANCES OF DRAINING CITED ABOVE ARE BASED ON THE ACTIVITY NUMBER & DESCRIPTION SHOWING MAN HOURS CHARGED TO DRAINING & REFILLING & THE ACTIVITY MARKED COMPLETE. EXCEPT FOR U-2 IN 1988 NO WRITTEN RECORDS EXIST. OPNS & WATER TREATMENT ARE CHECKING LOGS & RECORDS TO SEE IF THEY CAN HELP.

SALT RIVER PROJECT

POST OFFICE BOX 52025
PHOENIX, ARIZONA
85072-2025
(602) 236-5900

ATTACHMENT 7

July 21, 1988

U.S. Environmental Protection Agency
Region IX
Toxics and Waste Management Division
215 Fremont Street
San Francisco, CA 94105

Attention: RCRA Programs Section T-2-1

To Whom It May Concern:

Attached are revised EPA Notification of Hazardous Waste Activity forms for the following Salt River Project facilities:

Agua Fria Steam Plant
Coronado Generating Station
Kyrene Steam Plant
Navajo Generating Station

As reflected on the revised forms, all four of these facilities at certain times burn specification used oil in utility boilers on site.

Additionally, the Navajo Generating Station at certain times is capable of generating more than 1,000 kilograms per month of hazardous waste. Navajo is currently meeting, and will continue to meet, the regulatory provisions applicable to large quantity generators.

If you have any questions regarding these notifications, please contact me at (602) 236-2778.

Sincerely,

David Sultana

David Sultana
Sr. Staff Scientist
Environmental Services Department

DGS:laf
Attachments

SALT RIVER PROJECT

POST OFFICE BOX 52025
PHOENIX, ARIZONA
85072-2025
(602) 236-5900

July 21, 1988

U.S. Environmental Protection Agency
Region IX
Toxics and Waste Management Division
215 Fremont Street
San Francisco, CA 94105

Attention: RCRA Programs Section T-2-1

To Whom It May Concern:

Attached are revised EPA Notification of Hazardous Waste Activity forms for the following Salt River Project facilities:

Agua Fria Steam Plant
Coronado Generating Station
Kyrene Steam Plant
Navajo Generating Station

As reflected on the revised forms, all four of these facilities at certain times burn specification used oil in utility boilers on site.

Additionally, the Navajo Generating Station at certain times is capable of generating more than 1,000 kilograms per month of hazardous waste. Navajo is currently meeting, and will continue to meet, the regulatory provisions applicable to large quantity generators.

If you have any questions regarding these notifications, please contact me at (602) 236-2778.

Sincerely,

David Sultana

David Sultana
Sr. Staff Scientist
Environmental Services Department

DGS:laf

Please print or type with ELITE type *(12 characters per inch)* in the unshaded areas only

Form Approved. OMB No. 2050-0028. Expires 9-30-88
GSA No. 0246-EPA-01

United States Environmental Protection Agency
Washington, DC 20460

EPA Notification of Hazardous Waste Activity

Please refer to the *Instructions for Filing Notification* before completing this form. The information requested here is required by law *(Section 3010 of the Resource Conservation and Recovery Act).*

For Official Use Only

Comments

C C

Installation's EPA ID Number | Approved | Date Received *(yr. mo. day)*

C F | T/A | C 1

I. Name of Installation

SALT RIVER PROJECT - NAVAJO

II. Installation Mailing Address

Street or P.O. Box

C 3: PO BOX 52025 ENVIRON DEPT

City or Town | State | ZIP Code

C 4: PHOENIX | AZ | 85072

III. Location of Installation

Street or Route Number

C 5: 5 MIE OF PAGE ON HWY 98

City or Town | State | ZIP Code

C 6: PAGE | AZ | 86040

IV. Installation Contact

Name and Title *(last, first, and job title)* | Phone Number *(area code and number)*

C 2: SULTANA DAVID | 602 236 2778

V. Ownership

A. Name of Installation's Legal Owner | B. Type of Ownership *(enter code)*

C R: SALT RIVER PROJECT | PI

VI. Type of Regulated Waste Activity *(Mark 'X' in the appropriate boxes. Refer to instructions.)*

A. Hazardous Waste Activity

- [X] 1a. Generator
- [ ] 1b. Less than 1,000 kg/mo.
- [ ] 2. Transporter
- [ ] 3. Treater/Storer/Disposer
- [ ] 4. Underground Injection
- [ ] 5. Market or Burn Hazardous Waste Fuel *(enter 'X' and mark appropriate boxes below)*
  - [ ] a. Generator Marketing to Burner
  - [ ] b. Other Marketer
  - [ ] c. Burner

B. Used Oil Fuel Activities

- [ ] 6. Off-Specification Used Oil Fuel *(enter 'X' and mark appropriate boxes below)*
  - [ ] a. Generator Marketing to Burner
  - [ ] b. Other Marketer
  - [ ] c. Burner
- [X] 7. Specification Used Oil Fuel Marketer *(or On site Burner)* Who First Claims the Oil Meets the Specification

VII. Waste Fuel Burning: Type of Combustion Device *(enter 'X' in all appropriate boxes to indicate type of combustion device(s) in which hazardous waste fuel or off-specification used oil fuel is burned. See instructions for definitions of combustion devices.)*

[X] A. Utility Boiler [ ] B. Industrial Boiler [ ] C. Industrial Furnace

VIII. Mode of Transportation *(transporters only — enter 'X' in the appropriate box(es)*

[ ] A. Air [ ] B. Rail [ ] C. Highway [ ] D. Water [ ] E. Other *(specify)*

IX. First or Subsequent Notification

Mark 'X' in the appropriate box to indicate whether this is your installation's first notification of hazardous waste activity or a subsequent notification. If this is not your first notification, enter your installation's EPA ID Number in the space provided below.

[ ] A. First Notification [X] B. Subsequent Notification *(complete item C)*

C. Installation's EPA ID Number: AZD074452442

For Official Use Only															
C														T/A	C
W															1

X. Description of Hazardous Wastes *(continued from front)*

A. Hazardous Wastes from Nonspecific Sources. Enter the four-digit number from 40 *CFR* Part 261.31 for each listed hazardous waste from nonspecific sources your installation handles. Use additional sheets if necessary.

1	2	3	4	5	6
7	8	9	10	11	12

B. Hazardous Wastes from Specific Sources. Enter the four-digit number from 40 *CFR* Part 261.32 for each listed hazardous waste from specific sources your installation handles. Use additional sheets if necessary.

13	14	15	16	17	18
19	20	21	22	23	24
25	26	27	28	29	30

C. Commercial Chemical Product Hazardous Wastes. Enter the four-digit number from 40 *CFR* Part 261.33 for each chemical substance your installation handles which may be a hazardous waste. Use additional sheets if necessary.

31	32	33	34	35	36
37	38	39	40	41	42
43	44	45	46	47	48

D. Listed Infectious Wastes. Enter the four-digit number from 40 *CFR* Part 261.34 for each hazardous waste from hospitals, veterinary hospitals, or medical and research laboratories your installation handles. Use additional sheets if necessary.

49	50	51	52	53	54

E. Characteristics of Nonlisted Hazardous Wastes. Mark 'X' in the boxes corresponding to the characteristics of nonlisted hazardous wastes your installation handles. *(See 40 CFR Parts 261.21 — 261.24)*

☐ 1. Ignitable *(D001)* ☐ 2. Corrosive *(D002)* ☐ 3. Reactive *(D003)* ☐ 4. Toxic *(D000)*

XI. Certification

I certify under penalty of law that I have personally examined and am familiar with the information submitted in this and all attached documents, and that based on my inquiry of those individuals immediately responsible for obtaining the information, I believe that the submitted information is true, accurate, and complete. I am aware that there are significant penalties for submitting false information, including the possibility of fine and imprisonment.

Signature	Name and Official Title *(type or print)*	Date Signed
	John Rich Asst. Gen. Mgr., Power Operations	7/8/88

T-2-6

NAVAJO GENERATING STATION
SALT RIVER PROJECT
PAGE, ARIZONA

TELECOPY NUMBER 602/645-8811 ext.234

DATE: 11/18/88

TO: William Weiss /EXT.

FROM: H.C. VOEPEL /EXT.

NUMBER OF PAGES FOLLOWING THIS SHEET 5

SPECIAL INSTRUCTIONS: PLEASE PUT ON MR WEISS' DESK ASAP. THANK YOU —

(IF YOU HAVE PROBLEMS WITH TRANSMITTAL, PLEASE CALL THE SENDER AS THIS IS AN AUTOMATIC TELECOPY AND HAS NO OPERATOR.

ATTACHMENT 8

SALT RIVER PROJECT

NAVAJO GENERATING STATION
POST OFFICE BOX W
PAGE, AZ 86040
(602) 645-8811

November 17, 1988

William J. Weis III, Environmental Scientist
U. S. Environmental Protection Agency
215 Fremont Street T-3-2
San Francisco, CA 94105

Dear Mr. Weis:

We, at The Navajo Generating Station, are committed to responsible management of our water resources and wastes. We are a zero discharge plant. It is our practice to reclaim water at every opportunity. None of the water in our systems re-enters the environment except through atmospheric evaporation. Since the plant was started up we have improved our performance in water management wherever feasible. As you saw during your visit with us, we aren't done yet, there are still opportunities to improve our performance in these areas and we are actively pursuing them.

A full description of the Navajo Generating Station water reclamation system as it was on November 15, 1988 will be forwarded to you, per your request, when it is completed. In the meantime, the following description is presented showing our use of chromate and its flow through the system. This is presented to you for your use in evaluating the "possible violation" you discussed with us during the exit meeting of your visit.

It is our position that only one waste is produced by the system that receives the chromate. This waste is salt in solid form that is produced by the crystallizer. Results of analysis indicate that this salt is not a hazardous waste. We believe there was no violation.

Refer to the attached schematic of the syste

What happens to it in this instance?

"except when it is drained"

The bearing cooling water system is designed to remove heat from plant equipment such as lube oil systems and compressors and reject it to the main circulating water system. It is a closed system, its water doesn't mingle with waters of other systems except when it is drained. There is one 52,727 gallon bearing cooling water tank for each main generating unit (three tanks total). The water in this system is condensate with chromate in the range of concentration of 300 to 500 ppm used as the corrosion inhibitor. This system is never drained except when maintenance of the system is necessary.

Collection pond S13 receives bearing cooling water when one of the tanks is drained. S13 is a 36 acre-ft pond which is lined with a single layer of high density polyethylene, 100 mils thick. This pond is designed to receive several flows including rain runoff and unit three cooling tower overflow as well as bearing cooling water.

Water collected by gravity flow in S13 is pumped to collection and storage ponds 60-1A and 60-1B, which are at higher elevation. These ponds are 150 acre-ft total and are lined with a single layer of high density polyethylene, 100 mils thick. These ponds are designed to receive several flows including main circulating water system blowdown and ash system overflow as well as water pumped from S13. These ponds are intended to collect and store water for feed to the brine concentrators.

The reason these ponds are required is that the brine concentrators total capacity is 1400 gallons per minute. In normal steady state plant operation, the brine concentrators have slightly more than adequate capacity to process all circulating water system blowdown and ash system overflow. But during special situations such as maintenance periods or abnormal operation the capacity of the brine concentrators may not be adequate, hence the requirement to store the water until normal operation resumes, when the slightly excess brine concentrator capacity will be available to process the stored water.

Water from 60-1A and 60-1B is pumped to the brine concentrators, BC1, BC2, and BC3. This water is distilled, with heat added through a vapor compression process, in the brine concentrators. The products of the brine concentrators are brine and condensate. The condensate is of such high quality that it is used directly, with no other processing, as boiler water make-up.

The brine produced by the brine concentrators then flows to the crystallizer. Using a process similar to that of the brine concentrators, the crystallizer finishes the recovery of water from the brine. The products of the crystallizer are solid salt and condensate. The condensate produced by the crystallizer is high quality and this product is used with no further processing as plant make-up.

Crystallizer capacity is 90 gallons per minute. This capacity is slightly more than is necessary to process all the brine when plant operation is normal. Ponds 35-1 and 35-2 are designed to collect and store brine during maintenance periods and abnormal operation. These ponds are 30 acre-ft total and are lined with a single layer of high density polyethylene, 100 mils thick. The brine is then returned to the process when operation is returned to normal, and the slightly excess capacity is available to process the stored brine.

The solid salt from the crystallizer is stored in a solid waste disposal facility which is similar in structure to the ponds and is lined with high density polyethylene, 100 mils thick. An analysis of this solid waste was provided to you during your visit. According to that analysis the material was not classified as a hazardous waste by the EP toxicity evaluation, despite the concentration of chromium that was present according to the elemental analysis.

As you can see, throughout the process described above there is no waste product at any point in the process except the final solid product produced by the crystallizer. All of the water described is either being used or stored for use.

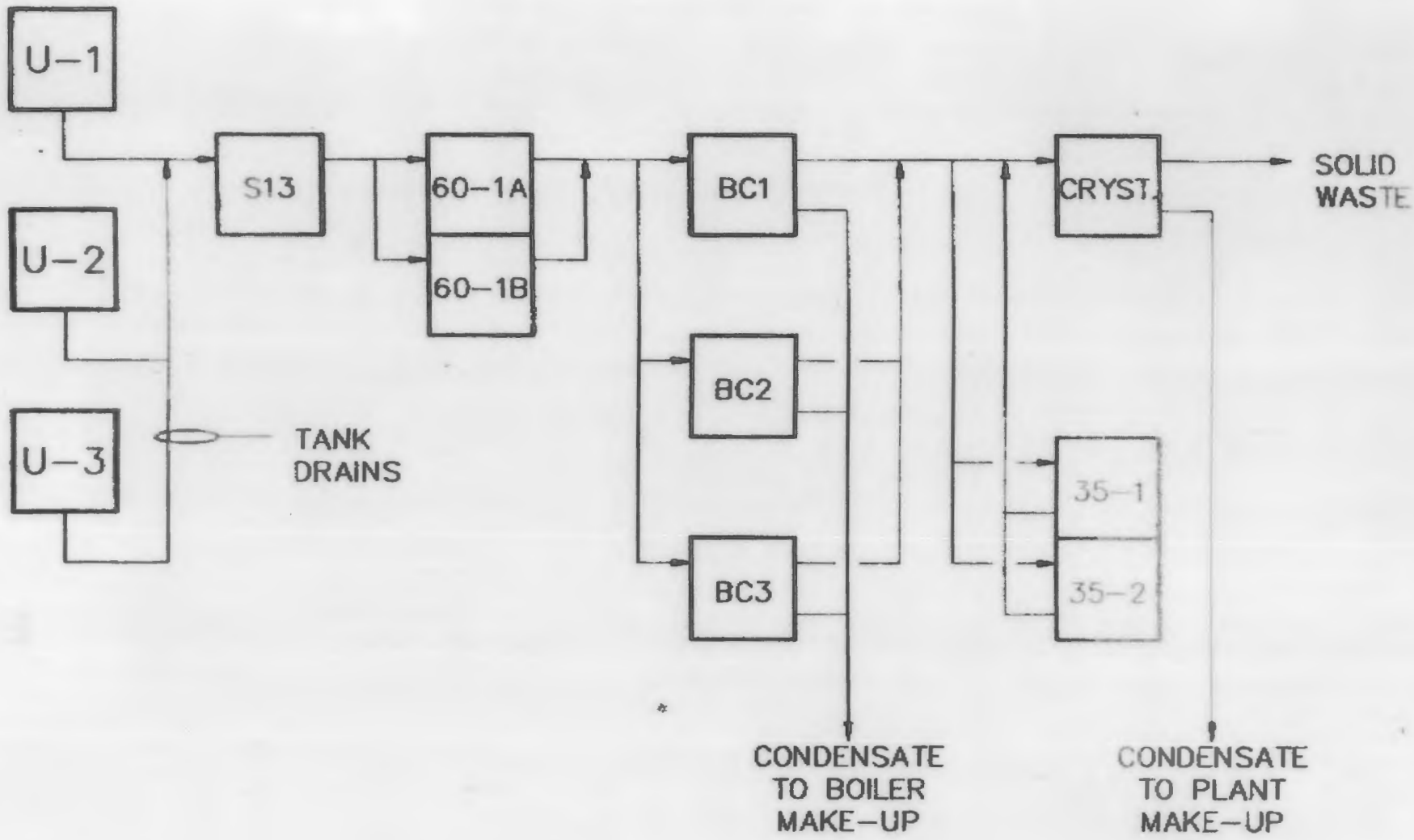
U-1
U-2
U-3
TANK DRAINS
S13
60-1A
60-1B
BC1
BC2
BC3
CRYST.
35-1
35-2
SOLID WASTE
CONDENSATE TO BOILER MAKE-UP
CONDENSATE TO PLANT MAKE-UP

Ponds S13, 60-1A, 60-1B, 35-1, and 35-2 were designed for collection and storage of water for further use, not for solar evaporation of waste.

If you have any further questions or discussion about our system please do not hesitate to contact me.

Sincerely,

John Wilk for

H. C. Voepel
Plant Manager

X71-102
REV. 11/85

NAVAJO GENERATING STATION

DAILY LOG REPORT

DATE 4/12/88 UNIT LOAD 800 CHEMIST Gm. Harvey UNIT ONE

	µS/cm SPEC.	µS/cm CATION	pH	NH_3 ppb	Morpholine ppm	N_2H_4 ppb	Fe ppb	Cu ppb	Na ppb	SiO_2 ppb	O_2 ppb	Cl ppb	SO_4 ppb	TOC ppb	BCW
CONDENSATE PUMP DISCHARGE	5.6	0.23	9.36	807		6	¢	¢	0	3	13	1	5		
POLISHER EFFLUENT	4.3	0.22	9.19	563			¢	¢	0	4		1	1		NS 9.15
DEAERATOR INLET	5.5		9.40	836		8					10	1	2		PA 8.28
DEAERATOR OUTLET	5.5		9.36	802		8					2	1	1		N 16
ECONOMIZER INLET	5.5		9.32	806		9	¢	¢	0	4		6	1		Cray 436
FURNACE WW OUTLET	5.6		9.33	759		7	¢	¢	0	4		1	2		
POLISHER A 9 NH_3 3/16	5.0	0.22	9.16	0			0	0	0	1		7	1		
POLISHER B 3 NH_3 3/18	5.0	0.22	9.25	788			0	0	0	2		1	2		
POLISHER C 7 NH_3 4/7	0.13	0.10	7.46	793			0	0	0	2		0	1		
UNIT MAKE-UP FROM BRINE CONCENTRATOR	2.4		7.37	384			0	1	50	3	60	4	113		
Evaporator	2.2	1.95	5.5	143			¢	¢	12	1	25	1	29		

PUMP STROKE	3.7	6.1	EVAP. HTR. VENT: EVAP. COND. VENT:	µS/cm	pH	CO_2	Na	Cl	CIRC WATER	A	
DEAERATOR INLET CHEMICALS	6 L. 1um686	6 in. NH_3 — in. Morph	E.VAPORATOR/VAPOR CONDENSATE			WB	A	B	T in	73	
CONDENSATE COND. (µS/cm)	A 0.55	B 0.55	EVAPORATOR BRINE	7200	11.23	AP	14	14	T out	97	
REMARKS:									BACK PRESS	2.2	
									D.A. VENT		

ATTACHMENT 9

NAVAJO GENERATING STATION

DAILY LOG REPORT – LOG #2

DATE 04/19/82 UNIT LOAD 790 TECHNICIAN HARVEY UNIT #

	TIME	MMHO SPEC / CAT	PH	"P" ALK	"M" ALK	Ca HARD	Mg HARD	TOTAL HARD	NaCl	N_2H_4	Fe ION / MP	SiO_2	Cu	Na IL / MTR.	O_2	NH_3
CONDENSATE	0700	3.3 / 0.5	9.10							1	4	41	0	5	15	384
POLISHER EFFL.		.28 / .28	6.3								0	36	0	1		Ø
DEAERATOR INLET			9.16							17					15	520
DEAERATOR OUTLET			9.05							16					2	520
ECONOMIZER INLET		3.4	9.04							14	4	42	0	1		512
'RN. WALL OUT		3.4	9.15							1	0	51	0	1		496
EVAPORATOR VAPOR/VAPOR COND.																
EVAPORATOR BRINE																
DEMINERALIZER H B 2 4/18	0715	.10 / .10	7.86								Ø	34	0	1		Ø
" H C 1 4/18		.34 / .34	7.84								Ø	30	0	1		Ø
" H Sp 4 4/16		.28 / .28	7.92								2	57	0	2	Ca-SO_4	Ø Nalco 7315
CIRC WATER "A" AM / PM																
CIRC WATER "B" AM / PM																
Bottom ASH	0900	3200	7.53						600							
BCW		1440	8.00				Cro4 705	84								

	CHEMICALS ADDED			NH_3	N_2H_4	PO_4	BLOW DOWN	BLOW DOWN		VENT	MWH READINGS
DEAERATOR OUTLET	3 IN. NH_3	7 L N_2H_4	AUX. BLR.	16 L	4 L	4 Lb.	A 0.2	B 0.2	DEAERATOR	1/2	PRES. 71
CHEMICALS ADDED	SULFAMIC	COBRATEC		H_2SO_4	Cl_2	345			EVAPORATOR HTR.	1/4	PREV. 107
CIRC. WATER "A"	250 ML	Ø L							EVAP. CONDENSER	1/4	DIFF.
CIRC WATER "B"	250 ML	Ø L							AUX. D.A.		2.5 – 2.8

REMARKS Set pt 2.8 – 3.2 Cond 3.2
2 gals Versine 100 to BCW
0800 – Spare out High SiO_2 per Craig:

WATER BOX DELTA "P"
"A" – 17
"B" – 17

COOLING TOWER MAKE-UP INTEGRATORS. "A" 006347 "B" 05861
006347 05861

ALUMINUM – ppb in

NAVAJO GENERATING STATION

DAILY LOG REPORT – LOG #2

DATE 4-12-83 UNIT LOAD 800 TECHNICIAN HARVEY UNIT #

	TIME	MMHO SPEC / CAT	PH	"P" ALK	"M" ALK	Ca HARD	Mg HARD	TOTAL HARD	NaCl	N_2H_4	Fe ION / MP	SiO_2	Cu	Na IL / MTR.	O_2	NH_3
CONDENSATE	0700	3.4 / .16	9.19							0	4	2	0	1	5	360
POLISHER EFFL.		2.4 / .14	8.74								0	1	0	1		256
DEAERATOR INLET			9.20							16					3	424
DEAERATOR OUTLET		3.5	9.18							13					0	464
ECONOMIZER INLET		3.6	9.13							13	8	2	0	1		424
RN. WALL OUT			9.06							0	0	0	0	1		424
EVAPORATOR VAPOR/VAPOR COND.																
EVAPORATOR BRINE																
DEMINERALIZER A A 1 3/26	0900	2.6 / .18	8.20								0	1	0	1		256
" A B 8 4/11		.14 / .10	6.65								0	0	0	0		0
" A C 7 3/25		3.0 / .19	8.80								1	2	0	3	Ca-SO_4	256 Nalco 7315
CIRC WATER "A" AM / PM																
CIRC WATER "B" AM / PM																
BCW	0915	16200	8.24				Cr04 760	45								
BA		5500	9.43						480							

	CHEMICALS ADDED			NH_3	N_2H_4	PO_4	BLOW DOWN A	BLOW DOWN B		VENT	MWH READINGS
DEAERATOR OUTLET	3 IN. NH_3	7 L N_2H_4	AUX. BLR.	L	L	Lb.			DEAERATOR	1/2	PRES.
CHEMICALS ADDED	SULFAMIC	COBRATEC		H_2SO_4	Cl_2	345			EVAPORATOR HTR.	1/4	PREV.
CIRC. WATER "A"	250 ML	Ø L							EVAP. CONDENSER	1/4	DIFF.
CIRC WATER "B"	1000 ML	Ø L							AUX. D.A.		2.83 – 3.4

REMARKS Start 3.6 – 4.0 Conduct. 3.4
Add 2 gals Versene 100

WATER BOX DELTA "P"
"A" – 17
"B" – 19

COOLING TOWER MAKE-UP INTEGRATORS. "A" 190249 "B" 459238
184490 458600

ALUMINUM – ppb in

X71-102
REV. 11/85

NAVAJO GENERATING STATION

DAILY LOG REPORT

DATE 3-8-88 UNIT LOAD 831 CHEMIST P McFarlen UNIT tw

	µS/cm SPEC.	µS/cm CATION	pH	NH_3 ppb	Morpholine ppm	N_2H_4 ppb	Fe ppb	Cu ppb	Na ppb	SiO_2 ppb	O_2 ppb	Cl ppb	SO_4 ppb	TOC ppb	TOC ppm	BCW PPM	
CONDENSATE PUMP DISCHARGE	5.6	2.3	9.13	585		8	2	3	127	16	Ø	14	223	48			
POLISHER EFFLUENT	0.13	0.10	8.74	79			2	2	Ø	8		3	10	35	CIRB 49	µS 1170	
DEAERATOR INLET	4.3		9.25	598		10					Ø	2	4		CIRC B 61	pH 8.3	
DEAERATOR OUTLET	4.3		9.16	602		17					Ø	2	4	28		H 5	
ECONOMIZER INLET	4.2		9.17	604		17	Ø	2	Ø	9		2	5			CaO 537	
FURNACE WW OUTLET	4.2		9.13	594		9	Ø	1	Ø	8		1	5				
POLISHER A 8 NH_3 3/7	0.13	0.13	6.3	Ø			Ø	Ø	Ø	3		Ø	6	37			
POLISHER B 6 NH_3 3/6	0.14	0.15	6.4	Ø			Ø	Ø	Ø	15		4	8	31			
POLISHER C 5 H_2 3/7	0.12	0.13	6.3	Ø			Ø	Ø	Ø	1		4	6	26			
UNIT MAKE-UP FROM [redacted] Chrys.	30		8.5	5781			3	5	46	4		17	22		12	CO_2	
Evaporator	4.0		5.44 (51°C)	367			Ø	1	55	4	7	3	79	382	T.C. 1586	4	ppm

PUMP STROKE	5.9	9.2	EVAP. HTR. VENT:	EVAP. COND. VENT:	µS/cm	pH	CO_2	Na	Cl	CIRC WATER	A	
DEAERATOR INLET CHEMICALS	6 L. 1um686	5 in. NH_3 — in. Morph	EVAPORATOR/VAPOR CONDENSATE				WB	A	B	T in	69	
CONDENSATE COND. (µS/cm)	A 1.8	B 8.0	EVAPORATOR BRINE		2300	10.70	ΔP	16	17	T out	92	
REMARKS: ↓ N_2H_4, ↑ NH_3										BACK PRESS	2.57	
										D.A. VENT		

X71-102
REV. 11/85

NAVAJO GENERATING STATION
DAILY LOG REPORT

DATE 4/12/87 UNIT LOAD _____ CHEMIST Russell UNIT Three

	µS/cm SPEC.	µS/cm CATION	pH	NH_3 ppb	Morpholine ppm	N_2H_4 ppb	Fe ppb	Cu ppb	Na ppb	SiO_2 ppb	O_2 ppb	Cl ppb	SO_4 ppb	TOC ppb	BCW			
CONDENSATE PUMP DISCHARGE	5.3	0.32	9.24	883	1.2	4	3	∅	0	1	5	9	7					
POLISHER EFFLUENT	3.8	0.22	9.00	650	1.0		3	∅	0	1		7	4		µS/ 1150			
DEA TOR INLET	5.4		9.25	941	0.9	7					3	7	3		pH/ 8.2			
DEAERATOR OUTLET	5.3		9.23	1093	1.4	8					∅	7	3		H/ 54			
ECONOMIZER INLET	5.3		9.21	1013	1.5	6	7	∅	0	2		8	3		Cray 467			
FURNACE WW OUTLET										∅								
POLISHER A 4 NH_3 4/10	0.15	0.15	6.88	463	0.2		7	∅	0	∅		9	7					
POLISHER B < NH_3 4/4	4.0	0.25	8.80	928	1.1		∅	∅	0	∅		8	5					
POLISHER C 1 NH_3 4/1	4.9	0.30	8.88	931	1.5		∅	∅	0	∅		2	4					
UNIT MAKE-UP FROM BRINE CONCENTRATOR	14		8.33	288	1.8													
Evap	20	22	8.36	265			12	∅	114	5	5	5	215					

PUMP STROKE			EVAP. HTR. VENT: EVAP. COND. VENT:	µS/cm	pH	CO_2	Na	Cl	CIRC WATER	A	B
DEAERATOR INLET CHEMICALS	6 L. 1um686	5 in. NH_3 10 in. Morph	EVAPORATOR/VAPOR CONDENSATE			WB	A	B	T in		
CONDENSATE COND. (µS/cm)	A	B	EVAPORATOR BRINE			ΔP			T out		
REMARKS:									BACK PRESS		
									D.A. VENT		4

137-3958
REV. 6/88

NAVAJO GENERATING STATION

DAILY LOG REPORT

DATE 10-25-88 UNIT LOAD 810 CHEMIST Gm. Harvey UNIT TWO

	SPEC. COND. (µS/cm)	CATION COND. (µS/cm)	pH	NH_3 (ppb)	Morpholine (ppm)	N_2H_4 (ppb)	Fe (ppb)	Cu (ppb)	Na (ppb)	SiO_2 (ppb)	O_2 (ppb)	Cl (ppb)	SO_4 (ppb)	TOC (ppb)	TOC (ppm)		
CONDENSATE PUMP DISCHARGE	5.3	0.20	9.40	700		9	0	0	ϕ	0	8			ϕ			
POLISHER EFFLUENT	4.0	0.15	9.28	455			0	0	ϕ	0				ϕ	A-Circ 34		
ERATOR INLET	5.4		9.40	670		9					5				B-Circ ~~24~~ 43		
DEAERATOR OUTLET	5.4		9.37	690		9					trace			93	SW 3.2		
ECONOMIZER INLET	5.4		9.35	630		9	0	0	ϕ	0					Raw 3.1		
FURNACE WW OUTLET	5.4		9.35	720		9	0	0	ϕ	0							
POLISHER A 5 A 10/1	5.2	0.29	9.20	695			4	ϕ	ϕ	3				197			
POLISHER B 3 A 10/23	0.16	0.13	7.96	14			8	ϕ	ϕ	ϕ				101			
POLISHER C 2 A 9/11	5.1	0.25	9.30	720			4	ϕ	ϕ	ϕ				62			
BRINE CONCENTRATOR COND.	1.8		8.0				25	ϕ	90	12	5			1181			
CRYSTALLIZER COND.			8.35				ϕ	9	53	4					143		
EVAPORATOR COND.	4.7	4.3	5.25	183			0	0	22	0	15			250	T.C. 403	CO_2 14	

PUMP STROKE	3.6	7.2			T.H.	CrO_4	µS/cm	pH	NH_3	Morph	TOC	CIRC WATER	A	
DEAERATOR INLET CHEMICALS	6 L. 1 UM686	6 in. NH_3	in. Morph	Bearing Cooling Water	8	476	1270	7.5				T in	72	
CONDENSATE COND. (µS/cm)	A	0.40 B	0.45									T out	101	
REMARKS:				Evaporator Brine			6290	12.00	WB	A	B	Back Press	28	3
									ΔP	13	12	D.A. VENT		

Add 25 Lbs Soda Ash to BCW

137-3868
REV. 6/88

NAVAJO GENERATING STATION

DAILY LOG REPORT

DATE 10-25-88 UNIT LOAD 790 CHEMIST Russell UNIT Three

	SPEC. COND. (µS/cm)	CATION COND. (µS/cm)	pH	NH_3 (ppb)	Morpholine (ppm)	N_2H_4 (ppb)	Fe (ppb)	Cu (ppb)	Na (ppb)	SiO_2 (ppb)	O_2 (ppb)	Cl (ppb)	SO_4 (ppb)	TOC (ppb)	TOC (ppm)		
CONDENSATE PUMP DISCHARGE	5.8	0.38	9.38	1089	1.3	9	3	ϕ	ϕ	4				1099			
POLISHER EFFLUENT	4.7	0.22	9.31	873	1.3		ϕ	ϕ	2	6				1057	A-Circ 30		
ERATOR INLET	6.1		9.48	1340	1.8	10									B-Circ 31		
DEAERATOR OUTLET	6.2		9.42	1055	1.6	7								1311	SW		
ECONOMIZER INLET	6.1		9.42	1071	1.8	9	ϕ	ϕ	2	6					Raw		
FURNACE WW OUTLET	6.0		9.40	1096	2.0	10	ϕ	ϕ	2	6							
POLISHER A 2 A 10/19	5.6	0.21	9.21	983	1.9		ϕ	ϕ	4	8				1223			
POLISHER ~~B~~ C 3 A 10/19	1.67	0.34	8.54	535	0.5		2	ϕ	ϕ	9				490			
POLISHER C 5 A 10/19	5.5	0.28	9.19	1227	2.3		2	ϕ	3	8				1226			
BRINE CONCENTRATOR COND.																	
CRYSTALLIZER COND.																	
EVAPORATOR COND.	2.2		6.25	352			4	ϕ	25	3				166	T.C. 594	CO_2 2	

PUMP STROKE	5.2	2.8			T.H.	CrO_4	µS/cm	pH	NH_3	Morph	TOC	CIRC WATER	A	
DEAERATOR INLET CHEMICALS	6 L. 1 UM686	5 in. NH_3	in. Morph	Bearing Cooling Water	35	459	1460	8.35				T in	75	
CONDENSATE COND. (µS/cm)	A 0.48	B 0.32		S.P.CE				8.87	621	5.0	2.9	T out	102	
REMARKS:				Evaporator Brine					WB	A	B	Back Press	2.71	
									△P	14	13	D.A. VENT		

X71-102
REV. 11/85

NAVAJO GENERATING STATION
DAILY LOG REPORT

DATE 2-10-87 UNIT LOAD 660 CHEMIST Gm. Harvey UNIT ONE

	µS/cm SPEC.	µS/cm CATION	pH	NH_3 ppb	Morpholine ppm	N_2H_4 ppb	Fe ppb	Cu ppb	Na ppb	SiO_2 ppb	O_2 ppb	Cl ppb	SO_4 ppb	TOC ppb	TOC PPM	BCW
CONDENSATE PUMP DISCHARGE	41	0.52	9.13	509		6.9	25	6	46	26	8	8	91	69		
POLISHER EFFLUENT	1.5	0.13	8.2	124			10	2	4	18		6	6	43	A/Sic 64	µS 734
ERATOR INLET	4.4		9.34	766		6.4					5	7	5		B/Sic 46	pH 8.6
DEAERATOR OUTLET	4.3		9.25	699		9.0					TRACE	5	17	49	SW 2.5	H 11
ECONOMIZER INLET	4.2		9.19	680		5.8	ϕ	ϕ	9	21		5	17		R 3.5	CrO_4 335
FURNACE WW OUTLET	4.1		9.15	719		5.1	ϕ	ϕ	16	22		9	20			
POLISHER A 3 NH_3	0.20	0.11	6.32	ϕ			0	2	0	4.2		2	0	26		
POLISHER B 9 NH_3 1-30	3.0	0.20	8.70	379			28	4	8	46.4		8	6	46		
POLISHER C 1 NH_3 2-6	0.14	0.13	6.20	ϕ			2	3	1	4.5		0	1	47		
UNIT MAKE-UP FROM BRINE CONCENTRATOR	1.6		7.00	165			5	3	80	6.0	30	229	252	1138		

PUMP STROKE	7.0	8.6	EVAP. HTR. VENT: EVAP. COND. VENT:	µS/cm	pH	CO_2	Na	Cl	CIRC WATER	A	
DEAERATOR INLET CHEMICALS	10 L. 1um686	4 in. NH_3 in. Morph	EVAPORATOR/VAPOR CONDENSATE			WB	A	B	T in	66	
CONDENSATE COND. (µS/cm)	A 1.4	B 0.75	EVAPORATOR BRINE			ΔP	14	14	T out	94	
									BACK PRESS	2.0	2
									D.A. VENT		

REMARKS: Evaporator down, 1B sphere out on Sodium & Silica
10 gals Na_2CrO_4 in BCW!

K71-102
REV. 11/83

NAVAJO GENERATING STATION

DAILY LOG REPORT

DATE 4/6/87 UNIT LOAD 429 CHEMIST L Burke UNIT 2

	µS/cm SPEC.	µS/cm CATION	pH	NH_3 ppb	Morpholine ppm	N_2H_4 ppb	Fe ppb	Cu ppb	Na ppb	SiO_2 ppb	O_2 ppb	Cl ppb	SO_4 ppb	TOC ppb	toc ppm	BCW		
CONDENSATE PUMP DISCHARGE	5.1	0.25	9.36	682		4.0	2	0	3	2.2	3	1	6	69				
POLISHER EFFLUENT	3.0	0.14	8.80	318			0	0	1	2.2		1	1	45	CIRCA 58	pH 7.91		
DEA TOR INLET	5.3		9.40	963		4.6					3	6	ϕ		CIRCB 69.5	COND 930		
DEAERATOR OUTLET	5.3		9.38	741		8.0					1	1	ϕ	45	SW 2.6	TH 10		
ECONOMIZER INLET	5.3		9.38	744		12.2	3	0	1	2.4		5	1		Lake	Cro4 496		
FURNACE WW OUTLET	5.4		9.37	942		4.6	1	0	1	1.2		1	6					
POLISHER A A 2 3/16	4.8	0.23	9.10	716			ϕ	ϕ	4	5		5	1	41				
POLISHER B A 1 3/26	2.5	0.11	8.80	290			2	ϕ	2	5		2	ϕ	33				
POLISHER C A 6 4/4	0.12	0.10	630	ϕ			1	ϕ	ϕ	3		ϕ	ϕ	29				
UNIT MAKE-UP FROM BRINE CONCENTRATOR	4.7		8.30	761			4	1	117	15	100	23	260	2100	TC	CO_2.		
EVAP	2.0		657	132			2	0	13	0	5	6	21	233	750	2	ppm	

PUMP STROKE	3.8	5.9	EVAP. HTR. VENT:	EVAP. COND. VENT:	µS/cm	pH	CO_2	Na	Cl	CIRC WATER	A	B
DEAERATOR INLET CHEMICALS	10 L. 1 um686	4 in. NH_3 — in. Morph	E.VAPORATOR/VAPOR CONDENSATE				WB	A	B	T in	65	64
CONDENSATE COND. (µS/cm)	A 0.42	B 0.22	EVAPORATOR BRINE				ΔP	17	16	T out	135	—
REMARKS:										BACK PRESS	1.50	1.72
										D.A. VENT		1/2

X71-102
REV. 11/85

NAVAJO GENERATING STATION

DAILY LOG REPORT

DATE 4/7/87 UNIT LOAD 438 CHEMIST Jm. Harvey UNIT 3

	µS/cm SPEC.	µS/cm CATION	pH	NH_3 ppb	Morpholine ppm	N_2H_4 ppb	Fe ppb	Cu ppb	Na ppb	SiO_2 ppb	O_2 ppb	Cl ppb	SO_4 ppb	TOC ppb	toc ppm	BCW	
CONDENSATE PUMP DISCHARGE	5.5	0.27	9.38	1135		6.5	ϕ	ϕ	1	3	3	ϕ	4	75			
POLISHER EFFLUENT	5.3	0.12	9.28	884			ϕ	ϕ	1	4		ϕ	ϕ	62	CIRC A 125	pH 8.29	
DEAERATOR INLET	5.8		9.45	1293		6.8					3	ϕ	ϕ		CIRC B 92	cond 1130	
DEAERATOR OUTLET	5.8		9.52	1150		6.0					Trace	1	1	50		TH 20	
ECONOMIZER INLET	5.9		9.52	1174		6.3	ϕ	ϕ	1	5		ϕ	1			Cro4 491	
FURNACE WW OUTLET	5.7		9.39	1149		4.6	ϕ	ϕ	1	5		5	1				
POLISHER A H 5 3/26	2.5	0.12	8.6	260			ϕ	ϕ	2	6		6	1	50			
POLISHER B A 2 3/18	6.5	0.13	9.40	1122			ϕ	ϕ	2	8		8	1	80			
POLISHER C A 3 3/19	6.5	0.16	9.40	1115			ϕ	ϕ	3	7		8	4	53			
UNIT MAKE-UP FROM BRINE CONCENTRATOR															TC	CO_2	
EVAP	2.3	2.3	5.8	46			ϕ	ϕ	51	4	3	9	113	253	1400	4.3	PPM

PUMP STROKE	4.7	3.2	EVAP. HTR. VENT:	EVAP. COND. VENT:	µS/cm	pH	CO_2	Na	Cl	CIRC WATER	A	
DEAERATOR INLET CHEMICALS	7 L. 1 um686	6 in. NH_3 — in. Morph	E.VAPORATOR/VAPOR CONDENSATE				NB	A	B	T in	68	
CONDENSATE COND. (µS/cm)	A 0.38	B 0.28	EVAPORATOR BRINE		4750	11.60	AP	14	14	T out	81	
REMARKS:										BACK PRESS	1.5	
										D.A. VENT		

X71-102
REV. 11/85

NAVAJO GENERATING STATION
DAILY LOG REPORT

DATE 4-9-86 UNIT LOAD 785 CHEMIST Len Burke UNIT ONE

	µS/cm SPEC.	µS/cm CATION	pH	NH_3 ppb	Morpholine ppm	N_2H_4 ppb	Fe ppb	Cu ppb	Na ppb	SiO_2 ppb	O_2 ppb	Cl ppb	SO_4 ppb	TOC ppb	toc PPM			
CONDENSATE PUMP DISCHARGE	5.0	0.43	9.32	737		3.7	5	0	23	2.7	20	1	25	47				
POLISHER EFFLUENT	3.6	0.10	9.01	541			2	0	6	3.6		1	1	27	Circ A 59.8			
DEAERATOR INLET	5.0		9.37	852		7.2					10	0	1		Circ B 57.8			
DEAERATOR OUTLET	5.0		9.35	808		9.1					3	2	0	29	Lake 3.0			
ECONOMIZER INLET	5.0		9.35	820		8.8	0	0	6	3.6		2	0		S/W 2.2			
FURNACE WW OUTLET	5.0		9.33	803		3.9	0	0	4	3.6		0	1					
POLISHER A A 2 3/29	4.8	0.12	9.19	688			3	Ø	15	2.5		0	1	16				
POLISHER B A 1 4/2	4.0	0.10	8.96	618			3	Ø	4	2.5		3	3	17				
POLISHER C A 9 4/5	0.13	0.11	6.40	Ø			Ø	Ø	Ø	4		4	1	12				
UNIT MAKE-UP FROM BRINE CONCENTRATOR	6.2		8.70	1144			7	2	92	28	100+	148	131	1790				
BCW	1100		7.70	TH 20	Croy 497													

PUMP STROKE	5.9	4.0	EVAP. HTR. VENT: EVAP. COND. VENT:	µS/cm	pH	CO_2	Na	Cl	CIRC WATER	A	B
DEAERATOR INLET CHEMICALS	10 L. 1um686	4 in. NH_3 in. Morph	E.VAPORATOR/VAPOR CONDENSATE			WB	A	B	T in	72	7
CONDENSATE COND. (µS/cm)	A 0.89	B 0.28	EVAPORATOR BRINE			AP	15.5	14	T out	106	10
REMARKS: 'A sphere ↓ High Na+ - 25# Soda Ash to BCW									BACK PRESS	2.83	3.
									D.A. VENT		1/2

X71 902
REV. 11/85

NAVAJO GENERATING STATION
DAILY LOG REPORT

DATE 4-9-86 UNIT LOAD 806 CHEMIST Len Burke UNIT two

	µS/cm SPEC.	µS/cm CATION	pH	NH_3 ppb	Morpholine ppm	N_2H_4 ppb	Fe ppb	Cu ppb	Na ppb	SiO_2 ppb	O_2 ppb	Cl ppb	SO_4 ppb	TOC ppb	TOC PPM			
CONDENSATE PUMP DISCHARGE	3.9	0.21	9.18	584		3.8	1	0	1	2.6	5	0	1	59				
POLISHER EFFLUENT	2.9	0.11	8.90	454			0	0	1	3.1	1	1	1	68	Circ A 52.2			
DEAERATOR INLET	4.0		9.24	607		4.8					4	0	1		Circ B 58.9			
DEAERATOR OUTLET	4.1		9.20	640		10.0					2	0	0	54				
ECONOMIZER INLET	4.0		9.23	648		9.7	4	0	ϕ	3.3		0	1					
FURNACE WW OUTLET	4.0		9.15	606		4.6	0	0	ϕ	3.2		0	1					
POLISHER A A 3 4/5	0.13	0.12	6.50	ϕ			ϕ	ϕ	ϕ	2		0	0	30				
POLISHER B A 8 3/6	3.8	0.16	9.18	551			ϕ	ϕ	1	3		1	2	58				
POLISHER C A 4 3/14	3.5	0.18	9.12	528			ϕ	ϕ	1	5		0	1	61				
UNIT MAKE-UP FROM BRINE CONCENTRATOR																		
BCW	1060		7.40	TH 17	Cro4 512													

PUMP STROKE	7.3	7.2	EVAP. HTR. VENT: EVAP. COND. VENT:	µS/cm	pH	CO_2	Na	Cl	CIRC WATER	A	B
DEAERATOR INLET CHEMICALS	10 L. 1um686	4 in. NH_3 — in. Morph	E.VAPORATOR/VAPOR CONDENSATE			WB	A	B	T in	73	7.
CONDENSATE COND. (µS/cm)	A 0.37	B 0.31	EVAPORATOR BRINE			AP	18	16	T out	110	11
REMARKS: Add 25 # Soda Ash to BCW									BACK PRESS	2.60	3.
									D.A. VENT		1/

X71-102
REV. 11/85

NAVAJO GENERATING STATION

DAILY LOG REPORT

DATE 4-13-86 UNIT LOAD 787 CHEMIST Len Burke UNIT ONE

	µS/cm SPEC.	µS/cm CATION	pH	NH_3 ppb	Morpholine ppm	N_2H_4 ppb	Fe ppb	Cu ppb	Na ppb	SiO_2 ppb	O_2 ppb	Cl ppb	SO_4 ppb	TOC ppb	TOC PPM		
CONDENSATE PUMP DISCHARGE	4.5		9.31	726		6.2	0	0	ϕ	1.3	18	0	2	59			
POLISHER EFFLUENT	1.6	0.11	8.65	270			0	0	ϕ	1.5		0	1	41	CIRC A 59		
DEAERATOR INLET	4.4		9.33	808		8.0					12	3	ϕ		CIRC B 57		
DEAERATOR OUTLET	4.5		9.32	725		9.7					4	3	ϕ	31	LAKE 2.8		
ECONOMIZER INLET	4.5		9.30	759		9.8	0	0	ϕ	1.8		3	ϕ		S/W 2.2		
FURNACE WW OUTLET	4.5		9.30	711		5.9	0	0	ϕ	1.8		3	ϕ				
POLISHER A A 7 4/9	0.13	0.12	6.40	ϕ			ϕ	ϕ	ϕ	2		ϕ	1	38			
POLISHER B A 2 4/11	0.14	0.12	6.45	ϕ			ϕ	ϕ	ϕ	ϕ		2	2	25			
POLISHER C A 9 4/5	3.50	0.15	9.28	570			ϕ	ϕ	4	2.5		0	1	32			
UNIT MAKE-UP FROM BRINE CONCENTRATOR	7.6		835	1338			2	4	194	38	80	72	329	1545			
BCW – UNIT #3	1450		6.60		CrO_4 800	TH 20											

PUMP STROKE	5.1	7.0	EVAP. HTR. VENT: EVAP. COND. VENT:	µS/cm	pH	CO_2	Na	Cl	CIRC WATER	A	
DEAERATOR INLET CHEMICALS	10 L. 1um686	4 in. NH_3 ~ in. Morph	EVAPORATOR/VAPOR CONDENSATE			WB	A	B	T in	72	7
CONDENSATE COND. (µS/cm)	A 0.14	B 0.30	EVAPORATOR BRINE			ΔP	20	14	T out	105	10
REMARKS: Add 50# Soda Ash to BCW U#3									BACK PRESS	2.71	3.1
									D.A. VENT		

X71-102
REV. 8/85

NAVAJO GENERATING STATION

DAILY LOG REPORT

DATE 4/16/85 UNIT LOAD 790 CHEMIST Gm. Harvey UNIT #1

	TIME	µMHO SPEC.	µMHO CATION	pH	N_2H_4 ppb	Fe ppb	SiO_2 ppb	Cu ppb	Na ppb	O_2 ppb	NH_3 ppb	TOC ppb	CrO_4	TH
CONDENSATE	0700	4.8	0.28	9.26	5.1	9	3.5	¢	21	25	850	93		
POLISHER EFFLUENT		0.23	0.27	6.70		4	2	¢	2		19	80		
DEAERATOR INLET		48		9.38	5.5					15	775			
DEAERATOR OUTLET		4.8		9.34	5.5					5	813	96		
ECONOMIZER INLET		4.8		9.31	3.8	3	3	¢	2		955			
FURNACE WW OUTLET		4.8		9.35	5.7	2	2	¢	1		1018			
DEMINERALIZER A A 5 4/15	0930	0.26	0.26	6.70		¢	5	¢	2		57	109		
DEMINERALIZER A B 9 4/13		0.18	0.16	6.40		¢	4.5	¢	1		¢	91		
DEMINERALIZER A C 8 4/12		0.17	0.15	6.60		¢	2.5	¢	2		¢	83		
UNIT MAKE-UP BC DWT		5.6		8.34		¢	14	¢	119	100	583	1484		
BCW	1000	1250		8.25							TOC #1 930 BC #2 1578 #3 1892	CrO_4 350		14

PUMP STROKE	3.2	8.6	EVAP. HTR. VENT:	EVAP. COND. VENT:	µMHO	pH	CO_2	Na	Cl	CIRC. WATER:	A	B
DEAERATOR INLET CHEMICALS	10 L ~~N_2H_4~~ 686	7 in. NH_3	EVAPORATOR/VAPOR CONDENSATE							T in	78	73
CONDENSATE COND. (µMHO)	A 0.90	B 0.62	EVAPORATOR BRINE							T out	104	98
CONDENSATE COND. SET PT.:				162689	189578					BACK PRESS	2.3	3.3
REMARKS: 10 gals Na CrO_4 to BCW			C.T.B. INTEBRATORS A:	158996	B: 185793					ΔP	14	15
			BLOWDOWN	3693	3885					D.A. VENT:		1/2

NAVAJO GENERATING STATION

DAILY LOG REPORT

DATE 4-16-85 UNIT LOAD 800 CHEMIST Gm. Haney UNIT #2

	TIME	µMHO SPEC.	µMHO CATION	pH	N_2H_4 ppb	Fe ppb	SiO_2 ppb	Cu ppb	Na ppb	O_2 ppb	NH_3 ppb	TOC ppb	CrO_4	T
CONDENSATE	0700	6.5	1.10	9.35	3.9	7	¢	1	6	12	1020	116		
POLISHER EFFLUENT		3.5	0.22	8.90		4	¢	¢	6		439	96		
DEAERATOR INLET		6.3		9.39	5.0					10	1059			
DEAERATOR OUTLET		6.1		9.33	4.5					3	1134	101		
ECONOMIZER INLET		6.1		9.36	4.1	2	¢	¢	6		1182			
FURNACE WW OUTLET		6.1		9.34	4.6	2	¢	¢	4		1202			
DEMINERALIZER A A 1 4/10	0930	2.80	0.13	8.60		¢	5	¢	6		418	102		
DEMINERALIZER A B 3 4/8		4.60	0.16	9.05		¢	8	¢	10		978	99		
DEMINERALIZER A C 7 4/15		0.18	0.22	6.90		¢	2	¢	1		¢	97		
UNIT MAKE-UP														
BCW	1000	1080		7.90									297	43

PUMP STROKE	44	8.6	EVAP. HTR. VENT:	EVAP. COND. VENT:	µMHO	pH	CO_2	Na	Cl	CIRC. WATER:	A	B
DEAERATOR INLET CHEMICALS	10 L 686 N_2H_4	7 in. NH_3	EVAPORATOR/VAPOR CONDENSATE							T in	75	92
CONDENSATE COND. (µMHO)	A 1.1	B 1.0	EVAPORATOR BRINE							T out	108	115
CONDENSATE COND. SET PT.:										BACK PRESS	2.9	3.5
REMARKS: 20 spker ↓ High Na+			C.T.B. INTEBRATORS A: OOS	B: OOS						ΔP	17	15
20 gals NaCrO4, 2 gals Versene ↓ 25# Sulfa to BCW			BLOWDOWN							D.A. VENT:		1/2

NAVAJO GENERATING STATION

DAILY LOG REPORT

DATE 03-26-85 UNIT LOAD 800 CHEMIST Gm. Harvey UNIT Three

	TIME	µMHO SPEC.	µMHO CATION	pH	N_2H_4 ppb	Fe ppb	SiO_2 ppb	Cu ppb	Na ppb	O_2 ppb	NH_3 ppb	TOC ppb	TOC ACS
CONDENSATE	0700	4.5	0.26	9.30	4.5	5	3.2	ϕ	4	10	807	49	#1 218
POLISHER EFFLUENT		3.6	0.13	9.14		ϕ	2.4	ϕ	1		440	37	#2 494
DEAERATOR INLET		47		9.31	7.6					8	804		#3 678
DEAERATOR OUTLET		44		9.25	3.2					ϕ	750	88	
ECONOMIZER INLET		4.7		9.35	3.1	ϕ	3.5	ϕ	1		656		
FURNACE WW OUTLET		4.5		9.30	5.8		3.4	ϕ	1		843		
DEMINERALIZER A Sp 1 2/25	0800	4.4	0.18	9.10		ϕ	3.4	ϕ	1		714	45	
DEMINERALIZER A B 5 3/3		4.0	0.14	9.17		ϕ	4.5	ϕ	4		800	47	
MINERALIZER A C 3 3/24		0.12	0.12	6.58		2	2.9	ϕ	ϕ		193	37	
UNIT MAKE-UP BC DWT	0900	8.4		6.67		ϕ	7	2	30	100	773	259	
												TH 20	CrO4 500
BCW	0800	1120		7.44									

PUMP STROKE	12	6.2	EVAP. HTR. VENT:	EVAP. COND. VENT:	µMHO	pH	CO_2	Na	Cl	CIRC. WATER:	A	B
DEAERATOR INLET CHEMICALS	15 lbm 686 L N_2H_4	7 in. NH_3	EVAPORATOR/VAPOR CONDENSATE							T in	78	73
CONDENSATE COND. (µMHO)	A 0.27	B 0.20	EVAPORATOR BRINE							T out	108	111
CONDENSATE COND. SET PT.:				034373	086376					BACK PRESS	2.9	3.3
REMARKS: 25# Soda ash to BCW			C.T.B. INTEBRATORS	A: 034372	B: 085903					ΔP	18	18.5
			BLOWDOWN	001	473					D.A. VENT:		1/2
				250 ml	250 ml							

X71 REV. 5/83

NAVAJO GENERATING STATION

DAILY LOG REPORT

DATE 04-03-84 UNIT LOAD 733 CHEMIST SUE. KITCHEN UNIT #1

	TIME	µMHO SPEC.	µMHO CATION	pH	N_2H_4 ppb	Fe ppb	SiO_2 ppb	Cu ppb	Na ppb	O_2 ppb	NH_3 ppb			
CONDENSATE	0700	5.7	.35	9.28	Ø	4	15	2	3	28	848			
POLISHER EFFLUENT		.13	.12	6.13		ϕ	12	Ø	ϕ		ϕ			
DEAERATOR INLET		6.0		9.25	3.9					10	880			
DEAERATOR OUTLET		6.0	.17	9.24	5.2					4	896			
ECONOMIZER INLET		6.0		9.35	2.6	2	15	Ø	ϕ		880			
FURNACE WW OUTLET		6.0		9.33	Ø	ϕ	16	Ø	2		920			
DEMINERALIZER H A 4 4/2	0900	0.14	0.14	6.58		3	4	Ø	ϕ		ϕ			
DEMINERALIZER H B 3 3/31		0.19	0.19	6.43		4	15	Ø	ϕ		ϕ			
DEMINERALIZER H C 7 3/20		0.15	0.15	6.32		5	24	Ø	ϕ		ϕ			
UNIT MAKE-UP		6.4		9.44		7	28	6	78	5	1240			
BCW		571		7.82	+H 12	Cr04 393								

PUMP STROKE	6.0	8.0	EVAP. HTR. VENT:	EVAP. COND. VENT:	µMHO	pH	CO_2	Na	Cl	CIRC. WATER:	A	B
DEAERATOR INLET CHEMICALS	Sum 686 25 ~~N_2H_4~~	5 in. NH_3	EVAPORATOR/VAPOR CONDENSATE							T in		
CONDENSATE COND. (µMHO)	A .26	B .40	[redacted]	Bottom ASH	4390	7.23	—	—	160	T out		
CONDENSATE COND. SET PT.:				800757	253470					BACK PRESS	17.5	25.8
REMARKS: Add 25# Soda ASH to BCW			C.T.B. INTEBRATORS	A: —	B: —					ΔP	13	13.9
			BLOWDOWN	(250)	(250)					D.A. VENT:		1/2

X71-102
REV. 5/83

NAVAJO GENERATING STATION

DAILY LOG REPORT

DATE 3/20/84 UNIT LOAD 800 CHEMIST Dm. Harvey UNIT 2

	TIME	µMHO SPEC.	µMHO CATION	pH	N_2H_4 ppb	Fe ppb	SiO_2 ppb	Cu ppb	Na ppb	O_2 ppb	NH_3 ppb			
CONDENSATE	0700	5.5		9.20	ϕ	2	ϕ	1	1.5	22	720			
POLISHER EFFLUENT		2.6	.12	8.80		2	ϕ	ϕ	4		176			
DEAERATOR INLET		5.6		9.35	18					8	792			
DEAERATOR OUTLET		5.7		9.33	16					2	736			
ECONOMIZER INLET		5.7		9.25	12	10	ϕ	ϕ	3.5		736			
FURNACE WW OUTLET		5.7		9.28	ϕ	ϕ	ϕ	ϕ	7.0		736			
DEMINERALIZER H A 1 3/15	0900	.27	.12	6.21		7	1	ϕ	5		24			
DEMINERALIZER H B 8 3/15		1.2	.21	7.03		3	3	ϕ	0		160			
DEMINERALIZER H C 2 3/13		3.1	.19	8.67		12	1	ϕ	4		400			
UNIT MAKE-UP B.C.	✓	4.8		8.0		20	21	ϕ	30	3	800			
BCW Bottom Ash	1300	7[illegible] 6290		7.10 710	Cr04 400	TH 10 445								

PUMP STROKE	6.2	5.7	EVAP. HTR. VENT:	EVAP. COND. VENT:	µMHO	pH	CO_2	Na	Cl	CIRC. WATER:	A	B
DEAERATOR INLET CHEMICALS	7 L. N_2H_4	5 in. NH_3	EVAPORATOR/VAPOR CONDENSATE							T in	71	72
CONDENSATE COND. (µMHO)	A .25	B .07	EVAPORATOR BRINE							T out	114	113
CONDENSATE COND. SET PT.:										BACK PRESS	3.0	4.1
REMARKS: Add 25# Soda Ash to BCW			C.T.B. INTEBRATORS A: 005	B: 005						ΔP	2.6	2.6
			BLOWDOWN							D.A. VENT:		1/2

(250) (250)

REV. 5/83

NAVAJO GENERATING STATION

DAILY LOG REPORT

DATE 4/3/84 UNIT LOAD 800 CHEMIST Harvey & Burke UNIT 3

	TIME	µMHO SPEC.	µMHO CATION	pH	N_2H_4 ppb	Fe ppb	SiO_2 ppb	Cu ppb	Na ppb	O_2 ppb	NH_3 ppb			
CONDENSATE		5.7	0.30	9.22	ϕ	8	5	ϕ	ϕ	15	784			
POLISHER EFFLUENT		0.33	.10	6.60		ϕ	2	ϕ	ϕ		ϕ			
DEAERATOR INLET		5.9		9.32	ϕ					10	800			
DEAERATOR OUTLET		5.9		9.26	0.7					5	864			
ECONOMIZER INLET		6.0		9.29	1.3	9	4	ϕ	ϕ		880			
FURNACE WW OUTLET		5.9		9.26	ϕ	10	5	ϕ	ϕ		800			
DEMINERALIZER NH_3 A 3/29		0.16	0.12	5.9		ϕ	3	ϕ	ϕ		ϕ			
DEMINERALIZER NH_3 B 3/27		0.15	0.14	6.2		ϕ	6	ϕ	ϕ		ϕ			
DEMINERALIZER NH_3 C 3/28		0.16	0.16	6.3		ϕ	5	ϕ	ϕ		ϕ			
UNIT MAKE-UP														
BCW		1470		8.15	TH 50	CrO4 518								

PUMP STROKE	3.2	9.4	EVAP. HTR. VENT: EVAP. COND. VENT:	µMHO	pH	CO_2	Na	Cl	CIRC. WATER:	A	B
DEAERATOR INLET CHEMICALS	28 10% N_2H_4	7 in. NH_3	EVAPORATOR/VAPOR CONDENSATE						T in	68	69
CONDENSATE COND. (µMHO)	A .25	B .30	EVAPORATOR ~~BRINE~~ Bottom ash	6220	7.0	—	—	240	T out	102	108
CONDENSATE COND. SET PT.:			[redacted]						BACK PRESS	2.5	2.8
REMARKS: Add 29 1/5 Versene 100			C.T.B. INTEBRATORS A: 005 B: 005						ΔP	18	18
To BCW			BLOWDOWN						D.A. VENT:		½

X7 -102
R~~EV. 6/79~~

NAVAJO GENERATING STATION

DAILY LOG REPORT – LOG #2

DATE 4-12-83 UNIT LOAD 810 TECHNICIAN HARVEY UNIT #

	TIME	MMHO SPEC / CAT	PH	"P" ALK	"M" ALK	Ca HARD	Mg HARD	TOTAL HARD	NaCl	N_2H_4	Fe ION / MP	SiO_2	Cu	Na IL / MTR.	O_2	NH_3
CONDENSATE	0700	4.5 / .23	9.20							0	2	0	0	2	8	616
POLISHER EFFL.	↓	2.4 / .10	8.77								0	0	0	2		296
DEAERATOR INLET			9.36							30					5	600
DEAERATOR OUTLET		4.7	9.31							27					0	680
ECONOMIZER INLET		4.8	9.28							23	5	0	0	2		624
RN. WALL OUT	↓		9.25							0	0	0	0	2		680
EVAPORATOR VAPOR/VAPOR COND.																
EVAPORATOR BRINE																
DEMINERALIZER A A 3 4/3	0900	2.5 / .26	8.40								0	0	0	2		144
" A B 4 4/10	↓	.10 / .10	6.5								0	0	0	0		0
" A C 9 3/	↓	3.6 / .12	9.0								0	0	0	3	Ca-SO_4	38 Nalco 7315
CIRC WATER "A" AM / PM																
CIRC WATER "B" AM / PM																
BC (MAKE-UP)	0930	5.0 / 1.9	8.8								0	2	Ø	32	0	520
B.A.	0915	6110	7.58						640							
BCW	↓	1690	8.46				Crou 620	20								

	CHEMICALS ADDED			NH_3	N_2H_4	PO_4	BLOW DOWN	BLOW DOWN		VENT	MWH READINGS
DEAERATOR OUTLET	3 IN. NH_3	7 L N_2H_4	AUX. BLR.	16 L	4 L	4 Lb.	A 0.2	B 0.2	DEAERATOR	1/2	PRES.
CHEMICALS ADDED	SULFAMIC	COBRATEC		H_2SO_4	Cl_2	345			EVAPORATOR HTR.	1/4	PREV.
CIRC. WATER "A"	250 ML	Ø L							EVAP. CONDENSER	1/4	DIFF.
CIRC WATER "B"	800 ML	Ø L							AUX. D.A.		2.13-3.[illegible]

REMARKS St pt 38-42 Condnt 4.7' ↓ NH_3 to st pt

WATER BOX DELTA "P"
"A" – 145
"B" – 17.5

COOLING TOWER MAKE-UP INTEGRATORS. "A" 451632 "B" 82781
451632 82580
Ø 201

ALUMINUM – ppb in

NGS CRYSTALLIZER SOLIDS CHEMICAL ANALYSIS
9/19/88

Analysis	Sample # 88-9-007 9/2/88	Sample # 88-8-29 8/26/88	Sample # 88-7-31-2 07/08/88	Sample # 88-5-2-1 05/13/88	Sample # 88-4-3-1 04/01/88	Sample # GSL A 02/11/88	Sample # GSL B 02/11/88	Sample # GSL C 02/11/88	Sample # 35465 10/19/87
Na (wt%)	19.00	23.60	24.80	28.20	22.50	23.40	28.47	27.50	22.40
Ca	1.40	0.40	1.70	0.10	1.60	NT	NT	NT	1.10
Mg	1.70	0.70	0.80	1.10	1.40	3.08	0.60	0.83	0.10
K	0.30	0.20	0.20	0.40	0.30	0.06	0.00	0.00	0.10
SO4	50.60	63.20	55.70	59.20	54.80	58.86	60.62	59.47	60.20
Cl	3.80	7.60	7.80	7.40	3.40	1.68	0.91	0.93	0.70
Subtotal	76.80	95.70	91.00	96.40	84.00	87.08	90.60	88.73	84.60
Analysis (mg/kg)									
Boron	3.44	2.89	2.62	44.00	86.00	NT	NT	NT	0.80
Iron	0.37	NT	0.13	ND	1.00	NT	NT	NT	0.70
Aluminum	0.97	NT	ND	ND	24.00	NT	NT	NT	1.00
Silicon	15.50	NT	4.80	2600.00	82.00	NT	NT	NT	ND
pH	6.10	6.70	6.20	7.40	6.98	NT	NT	NT	5.80
% Moisture	21.60	9.07	11.20			12.92	9.40	11.27	NT
Density									
gr/ml	1.87	2.21	2.20	2.30	1.71				
lb/ft3	116.74	137.97	137.35	143.60	106.50				

OTES: ND = Not Detected
NT = Not Tested

ATTACHMENT 10

NGS CRYSTALLIZER SOLIDS CHEMICAL ANALYSIS
9/19/88

ANALYSIS USING TOTAL DIGESTION METHOD

SAMPLE ID	Arsenic (mg/kg)	Barium (mg/kg)	Cadmium (mg/kg)	Chromium (mg/kg)	Lead (mg/kg)	Mercury (mg/kg)	Selenium (mg/kg)	Silver (mg/kg)
88-09-007	ND	3.00	0.80	ND	ND	ND	4.20	0.34
88-8-29	ND	ND	1.80	3.20	ND	ND	2.40	ND
88-7-31-2	12.00	1.00	ND	2.80	4.60	ND	2.40	ND
88-5-2-1	ND	3.00	ND	ND	ND	ND	9.10	ND
88-4-3-1	ND	10.00	1.50	8.20	10.00	ND	2.30	1.20

ANALYSIS USING EP TOX EXTRACTION TEST METHOD

SAMPLE ID	Arsenic (mg/l)	Barium (mg/l)	Cadmium (mg/l)	Chromium (mg/l)	Lead (mg/l)	Mercury (mg/l)	Selenium (mg/l)	Silver (mg/l)
EPA LIMIT (mg/l)	5.00	100.00	1.00	5.00	5.00	0.20	1.00	5.00
88-09-007	ND	ND	ND	ND	ND	ND	0.16	ND
88-8-29	ND	ND	ND	ND	ND	ND		ND
88-7-31-2	0.62	0.12	ND	0.11	0.24	ND	0.10	ND
88-5-2-1	ND	0.17	ND	0.10	ND	0.00	0.24	ND
88-4-3-1	ND	0.22	0.06	0.20	0.38	ND	0.02	0.05

NOTES: ND = Not Detected
NT = Not Tested

Memo

Date September 23, 1988

TO Kent Price

FROM Gregg Elliott

RE: Crystallizer Salt Sampling Frequency

As you requested, I performed a statistical analysis of the EP Tox data taken so far. The Method is in chapter nine, volume II of SW 846 - Test Methods for Evaluating Solid Wastes. The method allows calculation of the appropriate number of samples to collect from a solid waste to be sure a reliable, representative sample was obtained. The method only indicates a minimum number of samples, not the frequency of sampling. A table of the statistical results in attached.

I spoke with Cynthia Parker of Environmental. We agree an annual testing of the waste would be a prudent minimum. The crystallizer salt should be tested anytime a significant change in the process is made. I recommend having the salt tested in conjunction with the NGS groundwater monitoring program being conducted by Water Quality/Geohydrology. The sampling of well and ponds is being done on a quarterly basis. The project manager is Susan Finnegan, Ext. 5256.

Gregg Elliott

Gregg O. Elliott
Chemist
Water Quality Lab

ATTACHMENT 11

GOE:e

Attachment

CC: Alan J. Kleinschmidt

NGS Crystallizer Salt

Element	RT mg/l	CI mg/l	D.L. mg/l	N (samples)
Barium	100.0	0.11 ± 0.06	0.01	2×10^{-6} (<1)
Arsenic	5.0	0.3 ± 0.2	0.2	4×10^{-3} (<1)
Cadmium	1.0	0.02 ± 0.01	0.01	1×10^{-3} (<1)
Chromium	5.0	0.10 ± 0.04	0.04	4×10^{-4} (<1)
Lead	5.0	0.2 ± 0.2	0.2	6×10^{-4} (<1)
Mercury	0.2	0.002 ± 0.002	0.002	4×10^{-5} (<1)
Selenium	1.0	0.11 ± 0.07	0.02	3×10^{-2} (<1)
Silver	5.00	0.02 ± 0.02	0.02	5×10^{-4} (<1)

D.L. = Detection Limit

R.T. = Regulatory Threshhold

C.I. = Confidence interval

$= \bar{X} \pm t.20\ S_{\bar{x}}$

where $\bar{x}$ = mean of 5 samples

t.20 = students t value for N - 1 degrees of freedom

$S_x = S/\sqrt{n}$

= standard error

S = standard deviation

$N\ (\text{samples}) = (t.20)^2\ S^2 / \Delta^2$

where $\Delta = RT - \bar{x}$

COPPER STATE ANALYTICAL LAB. INC.
REGISTERED ASSAYER
710 E. EVANS • TUCSON, AZ 85713 PH. (602) 884-5811

Salt River Project
P.O. Box 52025
Phenix, Arizona 85072-2025

Job No. :-13236
Dt received:-09/14/87
Dt.Reported:-10/02/87
Control No.:-87-002

Location:-Waste Oil H.E. / Navajo Generating Station

Constituents Solvent Scan	Results %
Pentene	ND
Hexane	ND
Ether	ND
Heptane	ND
Ethylene Bromide	ND
Octane	ND
Acetone	ND
Chlorobutane	ND
Tetrahydrofuran	ND
111 TCA	ND
Mek	ND
I-Propanol	ND
Ethanol	ND
Benzene	ND
2-Pentanone	ND
TCE	ND
Acetonitrile	ND
Chloroform	ND
Toluene	ND
12Dichloropropane	ND
12Dichloroethane	ND
14 Dioxane	ND
I-Butanol	ND
Ethyl Benzene	ND
M-Xylene	ND
P-Xylene	ND
Butanol	ND
O-Xylene	ND
Parafins	ND
Kerosene	0.5
Turpentine	ND

ATTACHMENT 12

END SOLVENT SCAN

COPPER STATE ANALYTICAL LAB, INC.
REGISTERED ASSAYER
D.A. SHAH
AZ REG # [illegible]
710 E. EVANS • TUCSON, AZ 85713 PH. (602) 884-5811

COMPLETE ANALYTICAL SERVICES
CSA

Salt River Project
P.O. Box 52025
Phenix, Arizona 85072-2025

Job No. :-13237
Dt received:-09/14/87
Dt.Reported:-10/02/87
Control No.:-87-002

Location:-Waste Oil H.E. / Navajo Generation Station

Constituents Solvent Scan	Results %
Pentene	ND
Hexane	ND
Ether	ND
Heptane	ND
Ethylene Bromide	ND
Octane	ND
Acetone	ND
Chlorobutane	ND
Tetrahydrofuran	ND
111 TCA	ND
Mek	ND
I-Propanol	ND
Ethanol	ND
Benzene	ND
2-Pentanone	ND
TCE	ND
Acetonitrile	ND
Chloroform	ND
Toluene	ND
12Dichloropropane	ND
12Dichloroethane	ND
14 Dioxane	ND
I-Butanol	ND
Ethyl Benzene	ND
M-Xylene	ND
P-Xylene	ND
Butanol	ND
O-Xylene	ND
Parafins	ND
Kerosene	2%
Turpentine	ND

END SOLVENT SCAN D. A. Shah

COPPER STATE ANALYTICAL LAB, INC.
REGISTERED ASSAYER
D.A. SHAH
AZ Reg # [illegible]
710 E. EVANS • TUCSON, AZ 85713 PH. (602) 884-5811

Salt River Project
P.O. Box 52025
Phenix, Arizona 85072-2025

Job No. :-13238
Dt received:-09/14/87
Dt.Reported:-10/02/87
Control No.:-87-002

Location:-Waste Oil H.E. /Navajo Gernerating Station

Constituents Solvent Scan	Results %
Pentene	ND
Hexane	ND
Ether	ND
Heptane	ND
Ethylene Bromide	ND
Octane	ND
Acetone	ND
Chlorobutane	ND
Tetrahydrofuran	ND
111 TCA	ND
Mek	ND
I-Propanol	ND
Ethanol	ND
Benzene	ND
2-Pentanone	ND
TCE	ND
Acetonitrile	ND
Chloroform	ND
Toluene	ND
12Dichloropropane	ND
12Dichloroethane	ND
14 Dioxane	ND
I-Butanol	ND
Ethyl Benzene	ND
M-Xylene	ND
P-Xylene	ND
Butanol	ND
O-Xylene	ND
Parafins	ND
Kerosene	ND
Turpentine	ND

END SOLVENT SCAN D.A. Shah

SRP Memo

Date July 25, 1988

TO Art Oros

FROM David McKinney

RE: Navajo Waste Oil from All Western

RECEIVED
JUL 27 1988
RECLAMATION

The sample submitted to the laboratory on July 20, 1988 for solvent screen analysis was a two layer mixture. Analysis of the top level resembled results similar to a petroleum distillate in the range of a diesel fuel or kerosene as well as a lube oil. Analysis of the bottom layer yielded results which lead us to believe that they lower layer appears to be a mixture of the top layer and water. I was unable to quantitate on this sample due to the complexity of the mixture.

If you have any questions concerning this analysis, please feel free to call me at X5191.

David McKinney

David McKinney
Chemist
Water Quality Lab

RECEIVED
JUL 29 1988
RECLAMATION

DWM:eh

CC: Alan J. Kleinschmidt AK

ATTACHMENT 13

ANAL 2 DET 1 METH 35 35 FILE 112

RUN 1

SENSITIVITIES 900 100

RANGE 1K

Oil Layer 1:1

Job 88-07-067
Waste Oil (All Western)
NGS
rec'd 7/20/88

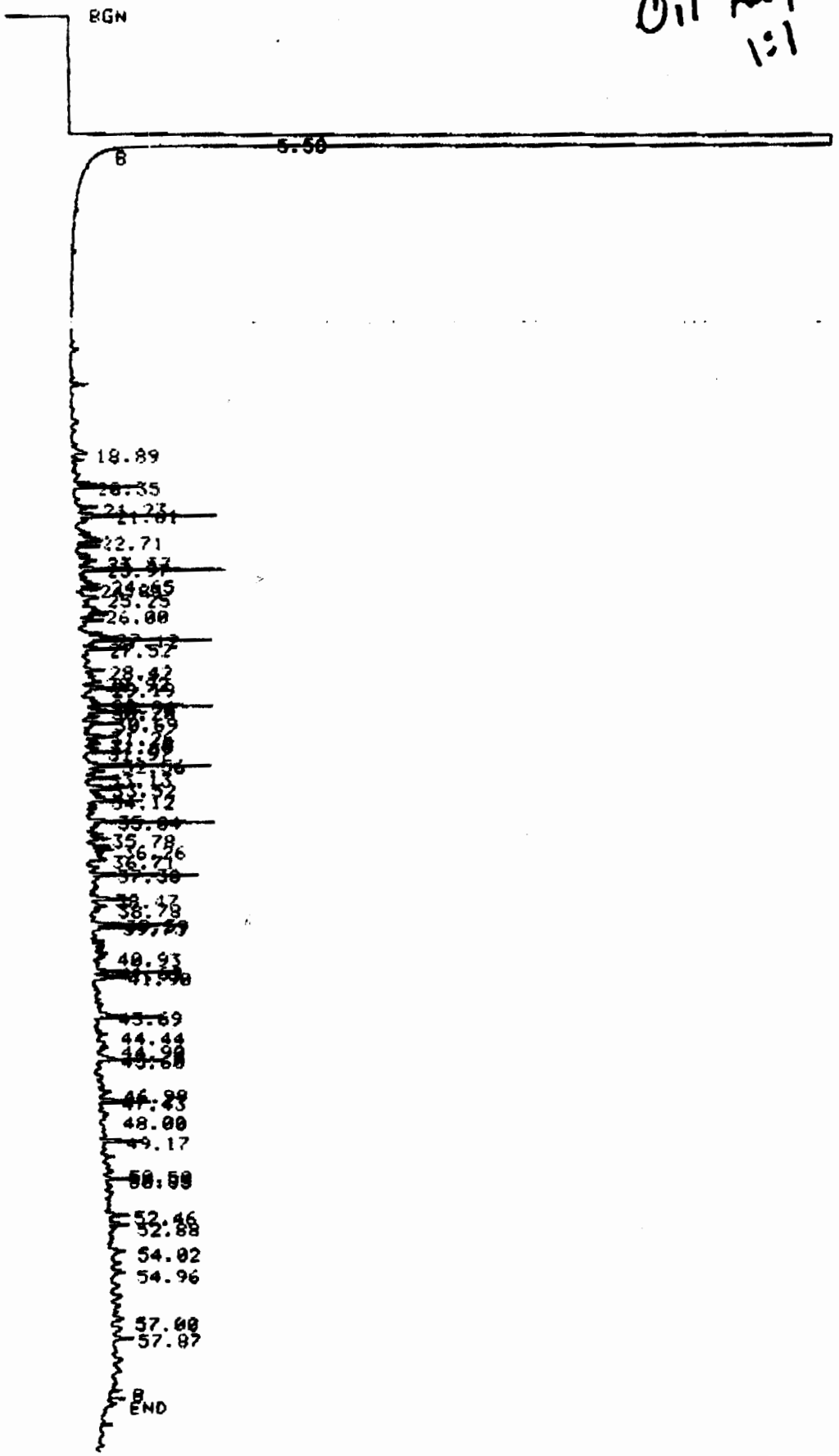

332-1911
196
PERKIN ELMER PART No. 332-1911

RUN 4

SENSITIVITIES 900 100

Oil layer 1:1 RANGE 100

Job 88-07-067
Waste Oil (All Western)
NGS
Rec'd 7/20/88

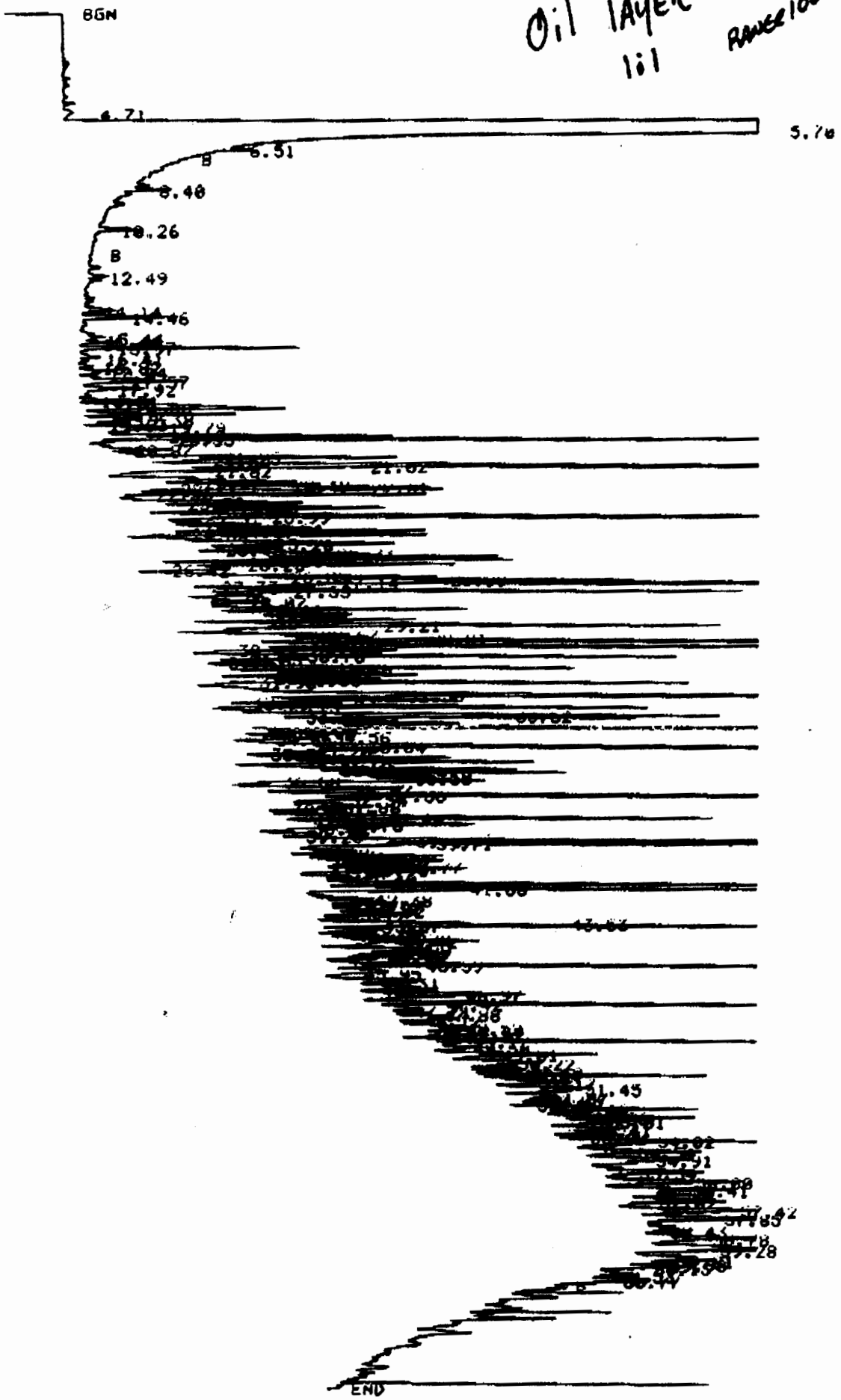

PERKIN ELMER PART No. 332-1511 008 PERKIN ELMER

ANAL 2 DET 1 METH 35 35 FILE 104

RUN 2

SENSITIVITIES 900 100

water layer 10:1 Conc

Range 1K

Job 88-07-067
Waste Oil (All Western
NGS
rec'd 7/20/88

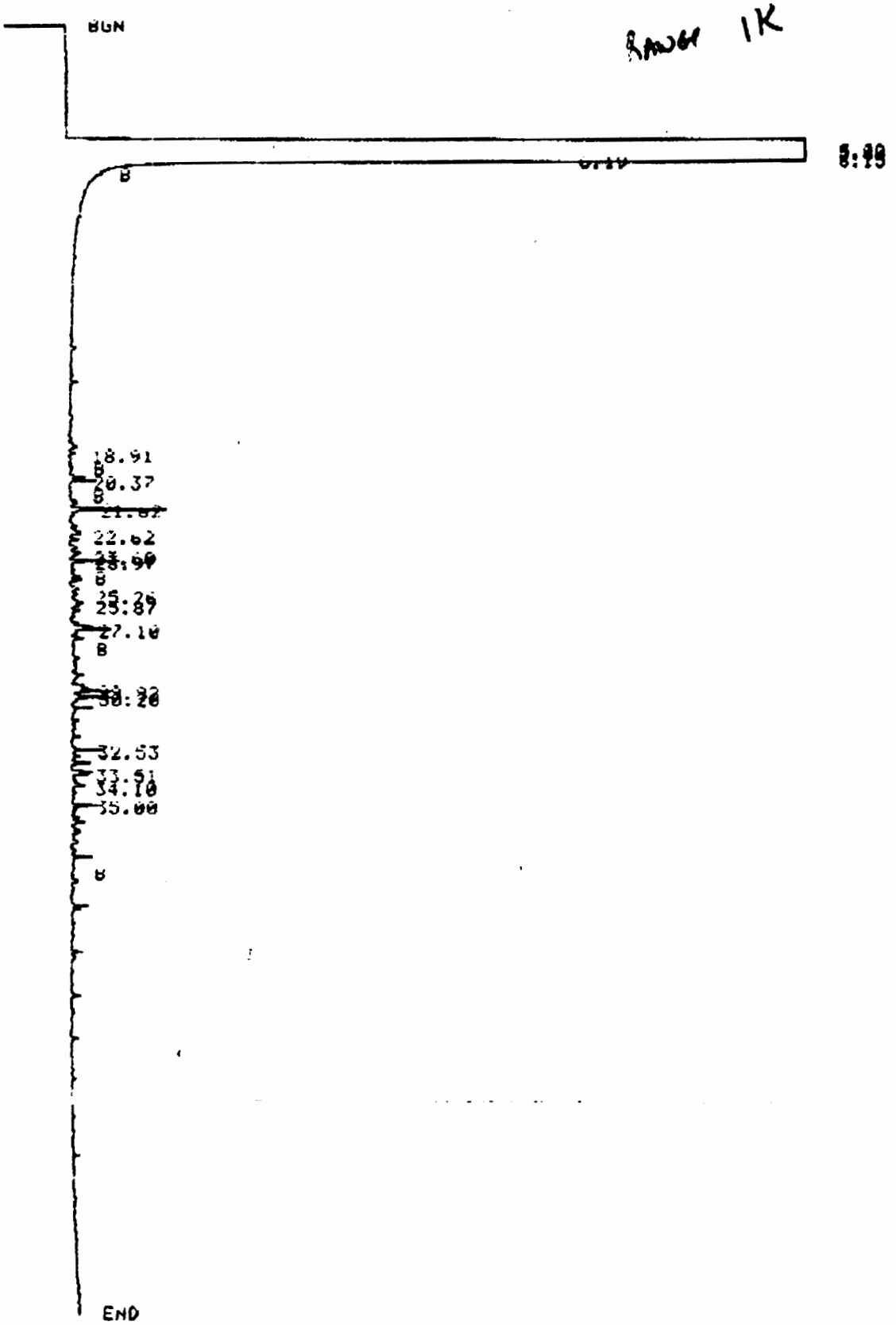

PERKIN-ELMER PART No. 332-1911

002

ANAL 2 DET 1 METH 35 35 FILE 104

RUN 2 21 : 1.2 / / 21 / 88

RCV BY:SRP NGS PAGE, AZ. ;11-15-88 ;11:25AM ; CCITT G3→ NGS PURCHASING;# 6

TIME FUNC NEW VALUE
58.15 01 58.15

Water hauge 10:1 Conc
Range 10

Job 88-07-067
Waste Oil (All Western
NGS
recd 7/20/88

ANAL 2 DET 1 METH 35 35 FILE 102

RUN 3

SENSITIVITIES 900 100

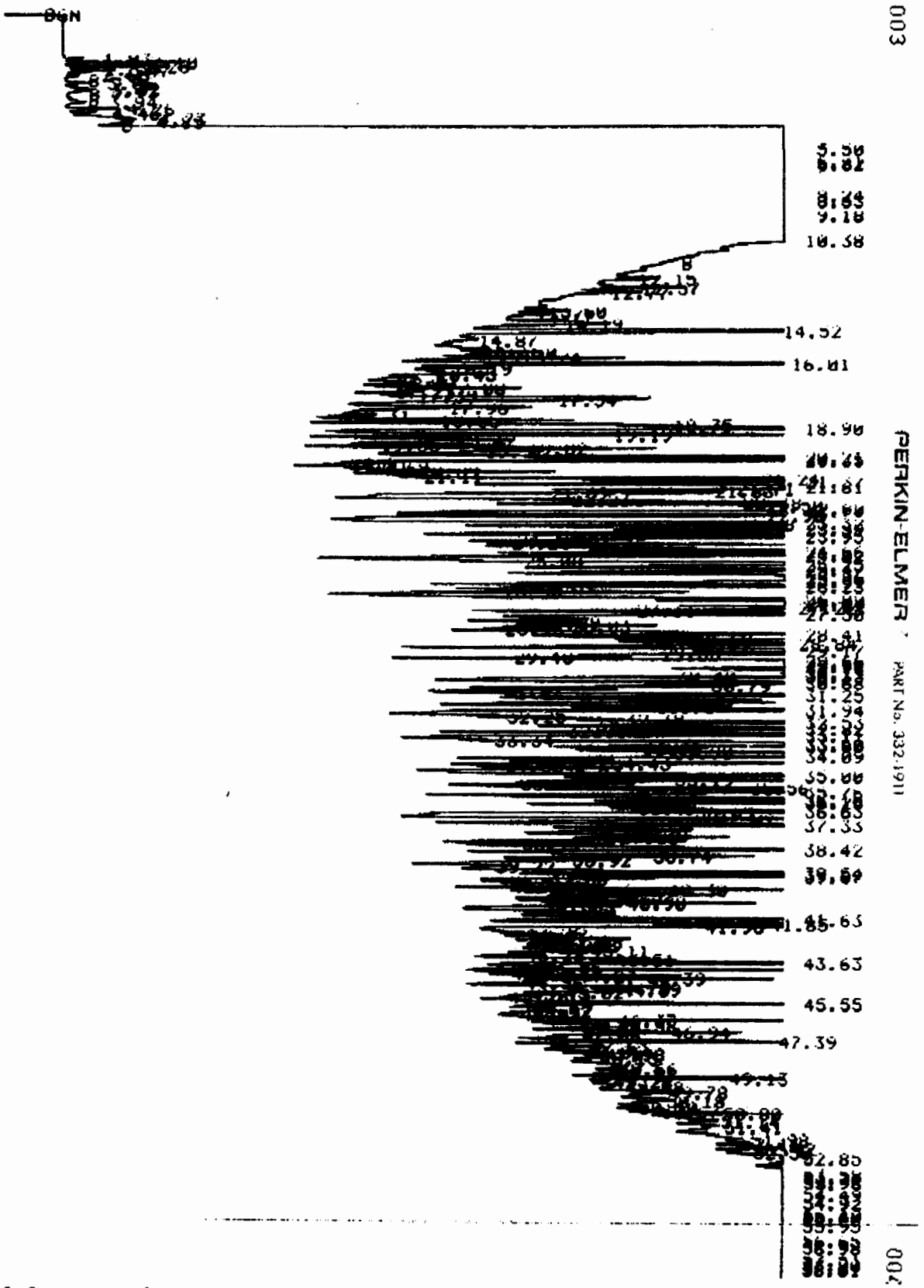

ANAL 2 DET 1 METH 35 35 FILE 105

RUN 3

SENSITIVITIES 900 100

Water Layer 10:1 Conc.
Range 100

Job 88-07-067
Waste Oil (All Water)
NGS
recd 7/20/88

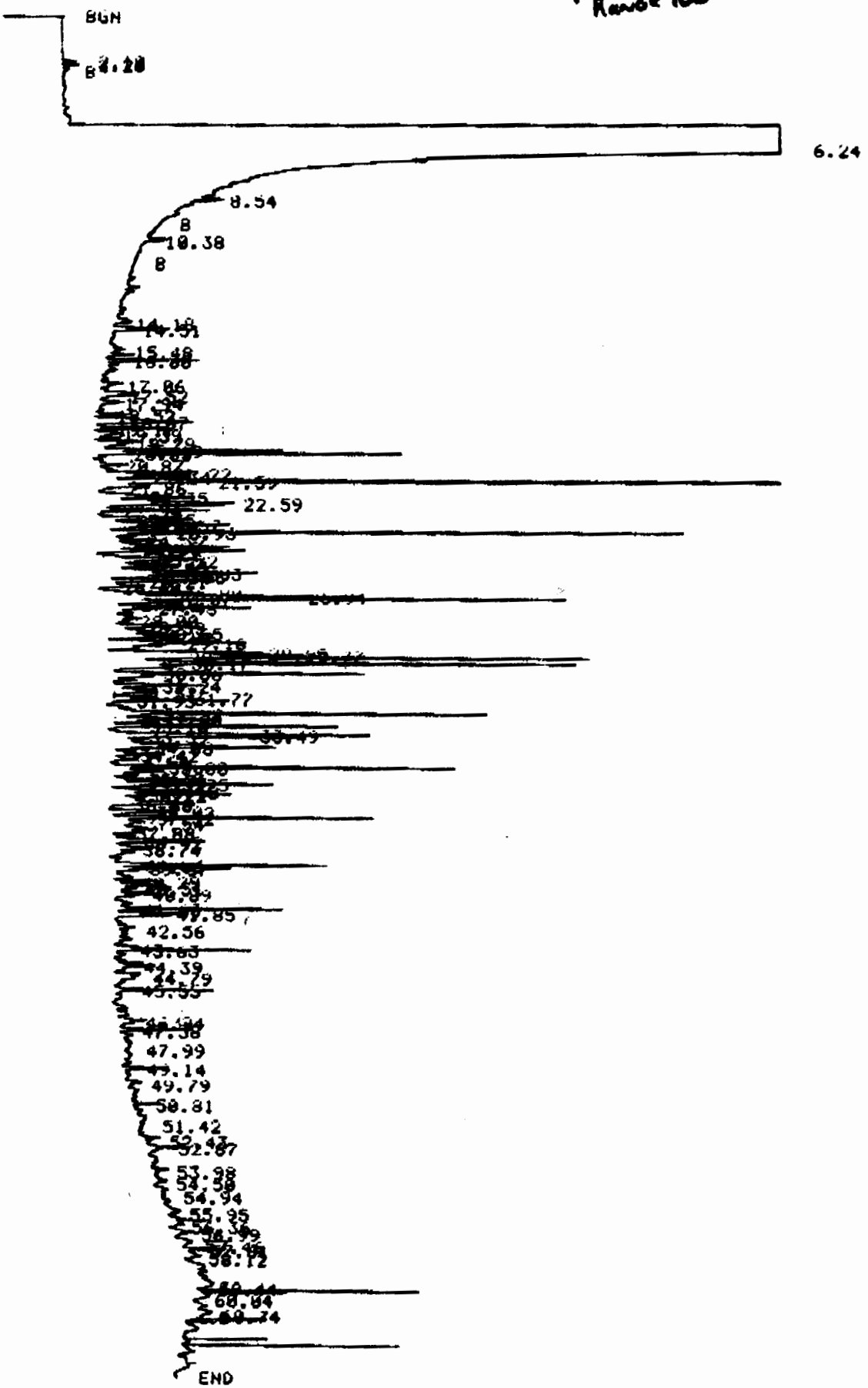

PERKIN ELMER

PART No. 332-1911

005

INDUSTRIAL DIVISION
UTILITY CHEMICALS

NALCO CHEMICAL COMPANY
4310 NORTH 75th STREET □ SUITE A □ SCOTTSDALE, ARIZONA 85251 □ AREA 602-941-3915
FAX 602-945-1791

June 29, 1988

ATTACHMENT 14

Salt River Project
Navajo Generating Station
P. O. Box W
Page, Arizona 86040

Attention: Mr. Craig Hiserote, Chemical Supervisor

Subject: Closed Bearing Cooling Water System Inhibitor Recommendation

Dear Craig:

The present treatment program for the Navajo bearing cooling water systems consists of maintaining a 600 to 800 ppm residual of chromate in the system via addition of Nalco 8320. Chromate is very effective in maintaining low corrosion rates and inhibiting microbial activity in closed cooling water systems using soft water for makeup. However, chromate is a hazardous material and presents unusual problems in product handling and disposal of treated water in case of spills or system drains during outages.

Therefore, in order to reduce handling and disposal of hazardous chromate, it is recommended that an alternative, equally effective bearing cooling water treatment program be evaluated.

The program offering the most cost effective replacement for the present chromate program is Sure-Cool 1355. Sure-Cool 1355 is a liquid blend of ferrous and nonferrous corrosion inhibitors, a noncarbonate buffer and a leak detection dye. The main components are nitrite and borates with MBT for yellow metal corrosion inhibition. Physical and chemical properties are presented in the attached Product Bulletin. Handling precautions are contained in the attached Material Safety Data Sheet.

The recommended dosage of 1355 is 2 ounces per gallon of system capacity. Sure-Cool 1355 is not compatible with chromates. Therefore, for initial treatment, the systems should be drained, flushed, and then refilled with 1355 added at the 2 oz/gal rate. Subsequent control is achieved by maintaining a nitrite residual in the system of 600 to 625 ppm. Nalco Test Kit C0304 can be used to check nitrite residuals as detailed in the attached Field Systems Product Bulletin FS-304. The 1355 can be added through the bypass feeders using exactly the same procedure as was used with the chromate product.

Craig, I believe use of the Sure-Cool 1355 program is primarily beneficial from the standpoint of elimination of a hazardous material from the plant site. However, additional benefits in the area of minimal corrosion rates will also be achieved as demonstrated in the BCW systems at Coronado Generating Station where corrosion rates were less than 0.1 Mils per Year for both mild steel and 90-10 Cu-Ni over the last five years. I will plan on discussing the BCW systems in more detail on my next plant visit. If you have any questions in the meantime, please give me a call.

Sincerely,

Larry L. Gibbs
Account Manager
Utility Chemicals Group

LLG:ksn

cc: Dr. K. A. Hooton, SRP - Power Operations

Attachments: Product Bulletin 1355
Material Safety Data Sheet 1355
FS-304

Nalco
cc: Mr. Bruce Thompson, District Manager

MATERIAL SAFETY DATA SHEET

NALCO

PRODUCT	NALCO 8320 CORROSION INHIBITOR

Emergency Telephone Number

Medical (312) 920-1510 (24 hours)

SECTION 1 PRODUCT IDENTIFICATION

TRADE NAME: NALCO 8320 CORROSION INHIBITOR
DESCRIPTION: An aqueous solution of sodium bichromate

NFPA 704M/HMIS RATING: 3/3 HEALTH 0/0 FLAMMABILITY 0/0 REACTIVITY 0 OTHER
0=Insignificant 1=Slight 2=Moderate 3=High 4=Extreme

SECTION 2 HAZARDOUS INGREDIENTS

Our hazard evaluation has identified the following chemical ingredient(s) as hazardous under OSHA's Hazard Communication Rule, 29 CFR 1910.1200. Consult Section 14 for the nature of the hazard(s).

INGREDIENT(S)	CAS #	APPROX.%
Sodium bichromate	7789-12-0	40+

SECTION 3 PRECAUTIONARY LABEL INFORMATION

Contains Chromium compounds: Cancer hazard based on tests with laboratory animals. Known to the State of California to cause cancer.

WARNING: May cause burns or external ulcers. Do not get in eyes, on skin, or on clothing. Do not breathe solution spray. Wear goggles or face shield and rubber gloves when handling. Keep container closed when not in use. Do not take internally.

Empty containers may contain residual product. Do not reuse container unless properly reconditioned.

SECTION 4 FIRST AID INFORMATION

EYES:	Immediately flush for at least 15 minutes while holding eyelids open. Call a physician at once.
SKIN:	Immediately flush with water for at least 15 minutes. For a large splash, flood body under a shower. Call a physician at once.
INGESTION:	Do not induce vomiting. Give water. Call a physician at once.
INHALATION:	Remove to fresh air. Treat symptoms. Call a physician at once.

NOTE TO PHYSICIAN: No specific antidote is known. Based on the individual reactions of the patient, the physician's judgment should be used to control symptoms and clinical condition.

ATTACHMENT 15

NALCO CENTER • NAPERVILLE, ILLINOIS 60566-1024

SECTION 4 FIRST AID INFORMATION (CONTINUED)

CAUTION: If unconscious, having trouble breathing or in convulsions, do not induce vomiting or give water.

SECTION 5 HEALTH EFFECTS INFORMATION

PRIMARY ROUTE(S) OF EXPOSURE: Eye, Skin, Inhalation

EYE CONTACT: Can cause severe irritation. Corrosive to the eyes with possible permanent damage depending on the length of exposure and on the first aid action given.

SKIN CONTACT: Can cause severe irritation. Corrosive to the skin, possibly resulting in third degree burns And ulceration depending on the length of exposure and on the first aid action given. Can cause allergic contact dermatitis in some individuals.

INGESTION: Can be harmful.

INHALATION: Can be corrosive to the mucous membranes and the lungs. Can cause an allergic reaction in susceptible individuals.

SYMPTOMS OF EXPOSURE: Chromium. Ingestion of sublethal amount causes tissue damage to the proximal convoluted tubules of the kidney. Causes dermatitis and ulceration of the hands from dermal contact and nasal septum perforations from inhalation.

AGGRAVATION OF EXISTING CONDITIONS: Chromium. Individuals with kidney disease may have an increased severity if chromium is ingested or inhaled.

CANCER EVALUATION:
The National Toxicology Program's (NTP) Annual Report On Carcinogens and The International Agency for Research on Cancer (IARC) Monographs have identified the following substance(s): Chromium compounds. As a suspect human cancer-causing agent based on limited human evidence but sufficient evidence in experimental animals.

COMMENTS: Chromates have been shown to cause bronchogenic cancers.

SECTION 6 TOXICOLOGY INFORMATION

ACUTE TOXICITY STUDIES: Acute toxicity studies have not been conducted on this product, but toxicity studies of the ingredient(s) in Section 2 have been reviewed. The results are shown below.

SECTION 6 TOXICOLOGICAL INFORMATION (CONTINUED)

ACUTE ORAL TOXICITY (ALBINO RATS):
Sodium bichromate LD50 = 50 mg/kg

SKIN SENSITIZATION: Chromium has been shown to cause allergic contact dermatitis.

CHRONIC TOXICITY RESULTS: Experimental animal data is positive for mutagenicity, teratogenicity and carcinogenicity for hexavalent chromium oxide.

SECTION 7 PHYSICAL AND CHEMICAL PROPERTIES

COLOR: Red/orange	FORM: Liquid	ODOR: None
DENSITY:	14.2 lbs/gal.	
SOLUBILITY IN WATER:	Completely	
SPECIFIC GRAVITY:	1.71 @ 60 Degrees F	ASTM D-1298
pH (NEAT) =	3.8	ASTM E-70
VISCOSITY:	3.4 cps @ 60 Degrees F	ASTM D-2983
FREEZE POINT:	-54.8 Degrees F	ASTM D-1177
FLASH POINT:	None (PMCC)	ASTM D-93

NOTE: These physical properties are typical values for this product.

SECTION 8 FIRE AND EXPLOSION INFORMATION

FLASH POINT: None (PMCC) ASTM D-93

EXTINGUISHING MEDIA: Not applicable

SECTION 9 REACTIVITY INFORMATION

INCOMPATIBILITY: Avoid alkaline materials (eg. ammonia and its solutions, carbonates, sodium hydroxide (caustic), potassium hydroxide, calcium hydroxide (lime), cyanides, sulfides, hypochlorites, chlorites) which can generate heat with splattering or boiling and the release of toxic fumes.

SECTION 10 PERSONAL PROTECTION EQUIPMENT

RESPIRATORY PROTECTION: Respiratory protection is not normally needed.

For large spills, entry into large tanks, vessels or enclosed small spaces with inadequate ventilation, a pressure-demand, self-contained

NALCO CHEMICAL COMPANY ONE NALCO CENTER • NAPERVILLE, ILLINOIS 60566-1024
AREA 312 961-9500

SECTION 10 PERSONAL PROTECTION EQUIPMENT (CONTINUED)

breathing apparatus is recommended.

VENTILATION: If significant dusting occurs, local exhaust ventilation is recommended.

PROTECTIVE EQUIPMENT: Wear gloves, boots, apron and a face shield with chemical splash goggles (ANSI Z 87.1 requirements and selection of gloves, goggles, shoes, etc.). A full slicker suit is recommended if gross exposure is possible.

The availability of an eye wash fountain and safety shower is recommended.

If clothing is contaminated, remove clothing and thoroughly wash the affected area. Launder contaminated clothing before reuse.

SECTION 11 SPILL AND DISPOSAL INFORMATION

IN CASE OF TRANSPORTATION ACCIDENTS, CALL THE FOLLOWING 24-HOUR TELEPHONE NUMBER (312-920-1510)

SPILL CONTROL AND RECOVERY:

Small liquid spills: Contain with absorbent material, such as clay, soil or any commercially available absorbent. Shovel reclaimed liquid and absorbent into recovery or salvage drums for disposal. Refer to CERCLA in Section 14.

Large liquid spills: Dike to prevent further movement and reclaim into recovery or salvage drums or tank truck for disposal. Refer to CERCLA in Section 14.

DISPOSAL: If this product becomes a waste, it meets the criteria of a hazardous waste as defined under the Resources Conservation and Recovery Act (RCRA) 40 CFR 261. Hazardous Waste D007.

As a hazardous liquid waste, it must be solidified before disposal in a landfill (Hazardous Waste Treatment, Storage and Disposal facility). Can be incinerated. Can be deep-well injected in accordance with local, state and federal regulations.

SECTION 12 ENVIRONMENTAL INFORMATION

If released into the environment, see CERCLA in Section 14.

SECTION 13 TRANSPORTATION INFORMATION

DOT PROPER SHIPPING NAME/HAZARD CODE - SODIUM DICHROMATE ORM-A NA 1479

SECTION 14 REGULATORY INFORMATION

The following regulations apply to this product.

FEDERAL REGULATIONS:

OSHA'S HAZARD COMMUNICATION RULE, 29 CFR 1910.1200:
Based on our hazard evaluation, the following ingredient in this product is hazardous and the reason is shown below.

Sodium bichromate - Cancer hazard based on tests with laboratory animals (refer to Section 5)

Sodium bichromate (as CrO4) = TWA 0.05 mg/m3 ACGIH/TLV

CERCLA/SUPERFUND, 40 CFR 117, 302:
This product contains sodium bichromate, a Reportable Quantity (RQ) substance and if 1,600 pounds of product are released, it requires notification to the NATIONAL RESPONSE CENTER, WASHINGTON, D. C. (1-800-424-8802).

SARA/SUPERFUND AMENDMENTS AND REAUTHORIZATION ACT OF 1986 (TITLE III) - SECTIONS 302, 311, 312 AND 313:

SECTION 302 - EXTREMELY HAZARDOUS SUBSTANCES (40 CFR 355):
This product does not contain ingredients listed in Appendix A and B as an Extremely Hazardous Substance.

SECTIONS 311 and 312 - MATERIAL SAFETY DATA SHEET REQUIREMENTS (40 CFR 370):
Our hazard evaluation has found this product to be hazardous. The product should be reported under the following EPA hazard categories:

XX Immediate (acute) health hazard
XX Delayed (chronic) health hazard
-- Fire hazard
-- Sudden release of pressure hazard
-- Reactive hazard

Under Section 311, submittal of MSDS's or a list of product names to the local emergency planning commission, state

NALCO CHEMICAL COMPANY ONE NALCO CENTER • NAPERVILLE, ILLINOIS 60566-1024

SECTION 14 REGULATORY INFORMATION (CONTINUED)

emergency response commission and local fire department is required after October 17, 1987 if you have:

- 10,000 pounds or more of a hazardous substance, or
- 500 pounds or the threshold planning quantity, whichever is less, of an extremely hazardous substance.

After October 17, 1989, MSDS(s), or a list of product names for all hazardous substances between zero (0) and 10,000 pounds, not previously reported, must be submitted.

SECTION 313 - LIST OF TOXIC CHEMICALS (40 CFR 372):
This product contains sodium bichromate, which appear(s) on the List of Toxic Chemicals.

TOXIC SUBSTANCES CONTROL ACT (TSCA):
The chemical ingredients in this product are on the 8(b) Inventory List (40 CFR 710).

RESOURCE CONSERVATION AND RECOVERY ACT (RCRA), 40 CFR 261 SUBPART C & D:
If this product becomes a waste, it does meet the criteria of a hazardous waste as defined under RCRA 40 CFR 261 (consult Section 11).

FEDERAL WATER POLLUTION CONTROL ACT, CLEAN WATER ACT, 40 CFR 401.15 (formerly Sec. 307), 40 CFR 116 (formerly Sec. 311):
This product contains the following ingredient(s) covered by the Clean Water Act:

Sodium bichromate - Section 307, 311

CLEAN AIR ACT, 40 CFR 60, SECTION 111, 40 CFR 61, SECTION 112:
This product does not contain ingredients covered by the Clean Air Act.

STATE REGULATIONS:

CALIFORNIA PROPOSITION 65:
This product contains a chromium compound, known to the State of California to cause cancer (refer to Section 2 and 3 of the MSDS).

MICHIGAN CRITICAL MATERIALS:
This product contains the following substance(s) identified on the Michigan Critical Materials Register:

SECTION 14 REGULATORY INFORMATION (CONTINUED)

Sodium bichromate

STATE RIGHT TO KNOW LAWS:
Regulated in those states using the TLV, NTP or IARC designation for sodium bichromate as a criteria for listing.

SECTION 15 ADDITIONAL INFORMATION

None

SECTION 16 USER'S RESPONSIBILITY

This product material safety data sheet provides health and safety information. The product is to be used in applications consistent with our product literature. Individuals handling this product should be informed of the recommended safety precautions and should have access to this information. For any other uses, exposures should be evaluated so that appropriate handling practices and training programs can be established to ensure safe workplace operations. Please consult your local sales representative for any further information.

SECTION 17 BIBLIOGRAPHY

ANNUAL REPORT ON CARCINOGENS, U.S. Department of Health and Human Services, Public Health Service, PB 33-135855, 1983.

CASARETT AND DOULL'S TOXICOLOGY, THE BASIC SCIENCE OF POISONS, Doull, J., Klaassen, C. D., and Admur, M. O., eds., Macmillian Publishing Company, Inc., N. Y., 2nd edition, 1980.

CHEMICAL HAZARDS OF THE WORKPLACE, Proctor, N. H., and Hughes, J. P., eds., J. P. Lipincott Company, N.Y., 1981.

DANGEROUS PROPERTIES OF INDUSTRIAL MATERIALS, Sax, N. Irving, ed., Van Nostrand Reinhold Company, N.Y., 6th edition, 1984.

IARC MONOGRAPHS ON THE EVALUATION OF THE CARCINOGENIC RISK OF CHEMICALS TO MAN, Geneva: World Health Organization, International Agency for Research on Cancer, 1972-1977.

PATTY'S INDUSTRIAL HYGIENE AND TOXICOLOGY, Clayton, G. D., Clayton, F. E., eds., John Wiley and Sons, N. Y., 3rd edition, Vol. 2 A-C, 1981.

REGISTRY OF TOXIC EFFECTS ON CHEMICAL SUBSTANCES, U.S. Department of

SECTION 17 BIBLIOGRAPHY (CONTINUED)

Health and Human Services, Public Health Service, Center for Disease Control, National Institute for Occupational Safety and Health, 1983 supplement of 1981-1982 edition, Vol. 1-3, OH, 1984.

Title 29 Code of Federal Regulations Part 1910, Subpart Z, Toxic and Hazardous Substances, Occupational Safety and Health Administration (OSHA).

THRESHOLD LIMIT VALUES FOR CHEMICAL SUBSTANCES AND PHYSICAL AGENTS IN THE WORKROOM ENVIRONMENT WITH INTENDED CHANGES, American Conference of Governmental Industrial Hygienists, OH.

PREPARED BY: John J. Kasper, MSc., Manager Product Safety
DATE CHANGED: 01/28/88 DATE PRINTED: 06/09/88

NALCO

MATERIAL SAFETY DATA SHEET

PRODUCT SURE-COOL 1355 INHIBITOR

Emergency Telephone Number
Medical (312) 920-1510 (24 hours)

SECTION 1 PRODUCT IDENTIFICATION

TRADE NAME: SURE-COOL 1355 INHIBITOR
DESCRIPTION: An aqueous solution of borate, silicate, nitrate, and nitrite

NFPA 704M/HMIS RATING: 2/2 HEALTH 0/0 FLAMMABILITY 0/0 REACTIVITY 0 OTHER
0=Insignificant 1=Slight 2=Moderate 3=High 4=Extreme

SECTION 2 HAZARDOUS INGREDIENTS

Our hazard evaluation has identified the following chemical ingredient(s) as hazardous under OSHA's Hazard Communication Rule, 29 CFR 1910.1200. Consult Section 14 for the nature of the hazard(s).

INGREDIENT(S)	CAS #	APPROX.%
Sodium nitrite	7632-00-0	1-10
Sodium tetraborate	1330-43-4	1-10

SECTION 3 PRECAUTIONARY LABEL INFORMATION

CAUTION: May be harmful if swallowed. May cause irritation to skin and eyes. Avoid contact with eyes, and prolonged or repeated contact with skin. Do not take internally.

Empty containers may contain residual product. Do not reuse container unless properly reconditioned.

SECTION 4 FIRST AID INFORMATION

EYES: Flush with water for 15 minutes. Call a physician.
SKIN: Flush with water for 15 minutes.
INGESTION: Induce vomiting. Give water. Call a physician at once.

NOTE TO PHYSICIAN: No specific antidote is known. Based on the individual reactions of the patient, the physician's judgment should be used to control symptoms and clinical condition.

CAUTION: If unconscious, having trouble breathing or in convulsions, do not induce vomiting or give water.

SECTION 5 HEALTH EFFECTS INFORMATION

PRIMARY ROUTE(S) OF EXPOSURE: Eye, Skin, Inhalation

ATTACHMENT 16

NALCO CHEMICAL COMPANY ONE NALCO CENTER • NAPERVILLE, ILLINOIS 60566-1024
AREA 312 961-2500

SECTION 5 HEALTH EFFECTS INFORMATION (CONTINUED)

EYE CONTACT: Can cause transient irritation.
SKIN CONTACT: Can cause transient irritation.
INGESTION: Can cause kidney damage. Can be harmful or fatal.

SYMPTOMS OF EXPOSURE: Sodium nitrite. Causes formation of methaemoglobinaemia leading to cyanosis and possible death if ingested. Repeated ingestion of small amounts causes blood pressure to drop, rapid pulse, headaches and visual disturbances. Causes central nervous system effects (e.g. headaches, tremors, drowsiness and convulsions).

AGGRAVATION OF EXISTING CONDITIONS: Sodium nitrite. Pregnant women are particularly sensitive to methaemoglobinaemia.

SECTION 6 TOXICOLOGY INFORMATION

ACUTE TOXICITY STUDIES: Acute toxicity studies have not been conducted on this product, but acute studies have been conducted on a similar product. The results are shown below.

ACUTE ORAL TOXICITY (ALBINO RATS): LD50 = 3,362 mg/kg

PRIMARY SKIN IRRITATION TEST (ALBINO RABBITS):
SKIN IRRITATION INDEX DRAIZE RATING: 0.5/8.0 Minimal irritation

PRIMARY EYE IRRITATION TEST (ALBINO RABBITS):
EYE IRRITATION INDEX DRAIZE RATING: 16.7/110.0

CHRONIC TOXICITY RESULTS: Sodium nitrite. Experimental animal studies have shown reproductive effects in the offspring of treated parents. These effects are not transmissible. Bacterial assay mutation studies have been positive. Tumorigenic data is equivocal.

SECTION 7 PHYSICAL AND CHEMICAL PROPERTIES

COLOR: Red	FORM: Liquid	ODOR: Faint organic	
DENSITY:	10.1 lbs/gal.		
SOLUBILITY IN WATER:	Completely		
SPECIFIC GRAVITY:	1.2 @ 60 Degrees F		ASTM D-1298
pH (NEAT) =	11 - 12		ASTM E-70
FREEZE POINT:	15 Degrees F		ASTM D-1177
FLASH POINT:	None		

NOTE: These physical properties are typical values for this product.

NALCO CHEMICAL COMPANY ONE NALCO CENTER • NAPERVILLE, ILLINOIS 60566-1024
AREA 312-961-9500

SECTION 8 FIRE AND EXPLOSION INFORMATION

FLASH POINT: None

EXTINGUISHING MEDIA: Not applicable

UNUSUAL FIRE AND EXPLOSION HAZARD: May evolve NOx or SOx under fire conditions.

SECTION 9 REACTIVITY INFORMATION

INCOMPATIBILITY: N-nitrosamines, many are cancer causing agents to laboratory animals, may be formed when certain amines are mixed with nitrous acid, organic or inorganic nitrites or atmospheres with high nitrous oxide concentrations.

Avoid contact with strong acids (eg. sulfuric, phosphoric, nitric, hydrochloric, chromic, sulfonic) which can generate heat, splattering or boiling and the release of toxic fumes.

THERMAL DECOMPOSITION PRODUCTS: In the event of combustion CO, CO2, NOx, SOx may be formed. Do not breathe smoke or fumes. Wear suitable protective equipment.

SECTION 10 PERSONAL PROTECTION EQUIPMENT

RESPIRATORY PROTECTION: Respiratory protection is not normally needed since the volatility and toxicity are low.

For large spills, entry into large tanks, vessels or enclosed small spaces with inadequate ventilation, a pressure-demand, self-contained breathing apparatus is recommended.

VENTILATION: General ventilation is recommended.

PROTECTIVE EQUIPMENT: Use impermeable gloves and chemical splash goggles (ANSI Z 87.1 requirements and selection of gloves, goggles, shoes, etc.) when attaching feeding equipment or doing maintenance.

If clothing is contaminated, remove clothing and thoroughly wash the affected area. Launder contaminated clothing before reuse.

SECTION 11 SPILL AND DISPOSAL INFORMATION

IN CASE OF TRANSPORTATION ACCIDENTS, CALL THE FOLLOWING 24-HOUR TELEPHONE NUMBER (312-920-1510)

NALCO CHEMICAL COMPANY ONE NALCO CENTER • NAPERVILLE, ILLINOIS 60566-1024
AREA 312-961-9500

SECTION 11 SPILL AND DISPOSAL INFORMATION (CONTINUED)

SPILL CONTROL AND RECOVERY:

Small liquid spills: Contain with absorbent material, such as clay, soil or any commercially available absorbent. Shovel reclaimed liquid and absorbent into recovery or salvage drums for disposal. Refer to CERCLA in Section 14.

Large liquid spills: Dike to prevent further movement and reclaim into recovery or salvage drums or tank truck for disposal. Refer to CERCLA in Section 14.

DISPOSAL: If this product becomes a waste, it does not meet the criteria of a hazardous waste as defined under the Resource Conservation and Recovery Act (RCRA) 40 CFR 261, since it does not have the characteristics of Subpart C, (i.e. D001 through D017) nor is it listed under Subpart D.

As a non-hazardous liquid waste, it should be solidified before disposal to a sanitary landfill. Can be deep-well injected in accordance with local, state and federal regulations.

SECTION 12 ENVIRONMENTAL INFORMATION

AQUATIC DATA:

96 hour static acute LC50 to Bluegill Sunfish = Greater than 1000 mg/l
48 hour static acute LC50 to Bluegill Sunfish = Greater than 1000 mg/l
24 hour static acute LC50 to Bluegill Sunfish = Greater than 1000 mg/l

96 hour no observed effect concentration is 100 mg/l based on no mortality or abnormal effects.

96 hour static acute LC50 to Rainbow Trout = 200 mg/l
48 hour static acute LC50 to Rainbow Trout = 570 mg/l
24 hour static acute LC50 to Rainbow Trout = Greater than 1000 mg/l

TOXICITY RATING: Slightly toxic

If released into the environment, see CERCLA in Section 14.

SECTION 13 TRANSPORTATION INFORMATION

DOT PROPER SHIPPING NAME/HAZARD CODE - HAZARDOUS SUBSTANCE, LIQUID, N.O.S.

NALCO CHEMICAL COMPANY ONE NALCO CENTER • NAPERVILLE, ILLINOIS 60566-1024
AREA 312-961-9500

SECTION 13 TRANSPORTATION INFORMATION (CONTINUED)

CONTAINS	ORM-E NA 9188 - SODIUM NITRITE

SECTION 14 REGULATORY INFORMATION

The following regulations apply to this product.

FEDERAL REGULATIONS:

OSHA'S HAZARD COMMUNICATION RULE, 29 CFR 1910.1200:
Based on our hazard evaluation, the following ingredients in this product are hazardous and the reasons are shown below.

Sodium nitrite - Chronic human effects

Sodium tetraborate = TWA 1 mg/m3 ACGIH/TLV

CERCLA, 40 CFR 117, 302:
This product contains sodium nitrite, a Reportable Quantity (RQ) substance and if 2,000 pounds of product are released, it requires notification to the NATIONAL RESPONSE CENTER, WASHINGTON, D. C. (1-800-424-8802).

SARA/SUPERFUND AMENDMENTS AND REAUTHORIZATION ACT OF 1986 (TITLE III) - SECTIONS 302, 311, 312 AND 313:

SECTION 302 - EXTREMELY HAZARDOUS SUBSTANCES (40 CFR 355):
This product does not contain ingredients listed in Appendix A and B as an Extremely Hazardous Substance.

SECTIONS 311 and 312 - MATERIAL SAFETY DATA SHEET REQUIREMENTS (40 CFR 370):
Our hazard evaluation has found this product to be hazardous. The product should be reported under the following EPA hazard categories:

XX Immediate (acute) health hazard
XX Delayed (chronic) health hazard
-- Fire hazard
-- Sudden release of pressure hazard
-- Reactive hazard

Under Section 311, submittal of MSDS's or a list of product names to the local emergency planning commission, state

NALCO CHEMICAL COMPANY ONE NALCO CENTER • NAPERVILLE, ILLINOIS 60566-1024
AREA 312 961-2500

SECTION 14 REGULATORY INFORMATION (CONTINUED)

emergency response commission and local fire department is required after October 17, 1987 if you have:

- 10,000 pounds or more of a hazardous substance, or
- 500 pounds or the threshold planning quantity, whichever is less, of an extremely hazardous substance.

After October 17, 1989, MSDS(s), or a list of product names for all hazardous substances between zero (0) and 10,000 pounds, not previously reported, must be submitted.

SECTION 313 - LIST OF TOXIC CHEMICALS (40 CFR 372):
This product does not contain ingredients (at a level of 1% or greater) on the List of Toxic Chemicals.

TOXIC SUBSTANCES CONTROL ACT (TSCA):
The chemical ingredients in this product are on the 8(b) Inventory List (40 CFR 710).

RESOURCE CONSERVATION AND RECOVERY ACT (RCRA), 40 CFR 261 SUBPART C & D:
If this product becomes a waste, it does not meet the criteria of a hazardous waste.

FEDERAL WATER POLLUTION CONTROL ACT, CLEAN WATER ACT, 40 CFR 401.15 (formerly Sec. 307), 40 CFR 116 (formerly Sec. 311):
This product contains the following ingredient(s) covered by the Clean Water Act:

Sodium nitrite - Section 311

CLEAN AIR ACT, 40 CFR 60, SECTION 111, 40 CFR 61, SECTION 112:
This product does not contain ingredients covered by the Clean Air Act.

STATE REGULATIONS:

CALIFORNIA PROPOSITION 65:

This product complies with the MSDS and labeling requirements of the Safe Drinking Water and Toxic Enforcement Act of 1986 (Proposition 65).

MICHIGAN CRITICAL MATERIALS:
This product does not contain ingredients listed on the Michigan Critical Materials Register.

NALCO CHEMICAL COMPANY ONE NALCO CENTER • NAPERVILLE, ILLINOIS 60566-1024
AREA 312-961-9500

SECTION 14 REGULATORY INFORMATION

(CONTINUED)

STATE RIGHT TO KNOW LAWS:
The following state(s) identify the ingredient(s) shown below as hazardous:

California, Illinois - Sodium nitrite
Massachusetts, New Jersey - Sodium nitrate

Regulated in those states using the TLV for sodium tetraborate as a criteria for listing.

SECTION 15 ADDITIONAL INFORMATION

None

SECTION 16 USER'S RESPONSIBILITY

This product material safety data sheet provides health and safety information. The product is to be used in applications consistent with our product literature. Individuals handling this product should be informed of the recommended safety precautions and should have access to this information. For any other uses, exposures should be evaluated so that appropriate handling practices and training programs can be established to ensure safe workplace operations. Please consult your local sales representative for any further information.

SECTION 17 BIBLIOGRAPHY

ANNUAL REPORT ON CARCINOGENS, U.S. Department of Health and Human Services, Public Health Service, PB 33-135855, 1983.

CASARETT AND DOULL'S TOXICOLOGY, THE BASIC SCIENCE OF POISONS, Doull, J., Klaassen, C. D., and Admur, M. O., eds., Macmillian Publishing Company, Inc., N. Y., 2nd edition, 1980.

CHEMICAL HAZARDS OF THE WORKPLACE, Proctor, N. H., and Hughes, J. P., eds., J. P. Lipincott Company, N.Y., 1981.

DANGEROUS PROPERTIES OF INDUSTRIAL MATERIALS, Sax, N. Irving, ed., Van Nostrand Reinhold Company, N.Y., 6th edition, 1984.

IARC MONOGRAPHS ON THE EVALUATION OF THE CARCINOGENIC RISK OF CHEMICALS TO MAN, Geneva: World Health Organization, International Agency for Research on Cancer, 1972-1977.

NALCO CHEMICAL COMPANY ONE NALCO CENTER • NAPERVILLE, ILLINOIS 60566-1024
AREA 312-961-2500

SECTION 17 BIBLIOGRAPHY (CONTINUED)

PATTY'S INDUSTRIAL HYGIENE AND TOXICOLOGY, Clayton, G. D., Clayton, F. E., eds., John Wiley and Sons, N. Y., 3rd edition, Vol. 2 A-C, 1981.

REGISTRY OF TOXIC EFFECTS ON CHEMICAL SUBSTANCES, U.S. Department of Health and Human Services, Public Health Service, Center for Disease Control, National Institute for Occupational Safety and Health, 1983 supplement of 1981-1982 edition, Vol. 1-3, OH, 1984.

Title 29 Code of Federal Regulations Part 1910, Subpart Z, Toxic and Hazardous Substances, Occupational Safety and Health Administration (OSHA).

THRESHOLD LIMIT VALUES FOR CHEMICAL SUBSTANCES AND PHYSICAL AGENTS IN THE WORKROOM ENVIRONMENT WITH INTENDED CHANGES, American Conference of Governmental Industrial Hygienists, OH.

PREPARED BY: John J. Kasper, MSc., Manager Product Safety
DATE CHANGED: 01/21/88 DATE PRINTED: 06/29/88

NALCO CHEMICAL COMPANY ONE NALCO CENTER • NAPERVILLE, ILLINOIS 60566-1024
AREA 312-961-8500

NALCO

Nitrite TEST KIT

- Accurate, simple, economical
- Reduces costs associated with large laboratories
- Allows rapid response to system changes
- Self contained
- Unique chemical packaging reduces testing solution contamination
- Durable, portable

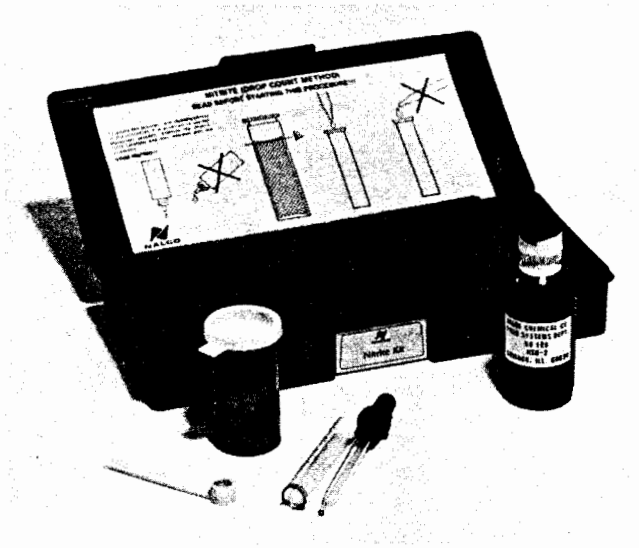

PRINCIPAL USES

The Nitrite Test Kit, Code C0304, was designed with special emphasis on cooling tower applications where nitrites are used to inhibit corrosion. However, the test kit can also be used in other nitrite-based processes where the control and monitoring of nitrite concentration is required. The simplicity of this drop-count titration test allows ease of operation, but still provides high levels of accuracy in a wide variety of waters.

The small size test kit is durable and self contained. The unique chemical packaging allows the user to perform an analysis without the need for additional work space.

REPLACEMENT PARTS AND SOLUTIONS

Apparatus	Part No.
Drop-count tube (marked at 5 and 10 ml)	P0010
0.5-g scoop	P0013
Glass dropper pipet	P0011

Solution	Solution No.	Shelf Life
NTD-1 (buffer)	S0125	1 yr
NTD-2 (titrant)	S0126	1 yr

SPECIFICATIONS

Method: Drop-count titration
Range: 50 – 1000 ppm nitrite (as $NaNO_2$)
Number of Reagents: 2

TO ORDER

Order as Test Kit Code C0304. Order all replacement parts and solutions by their numbers. To be sure this test kit is compatible with the product in use, contact your local Nalco representative.

(Continued on Reverse Side)

NALCO CHEMICAL COMPANY
FIELD SYSTEMS
6233 W. 65TH ST. □ CHICAGO, ILLINOIS 60638

SUBSIDIARIES IN ARGENTINA, AUSTRIA, BRAZIL, CHILE, COLOMBIA, ECUADOR, FINLAND, FRANCE, HOLLAND, HONG KONG, ITALY, PHILIPPINES, SAUDI ARABIA, SPAIN, SWEDEN, VENEZUELA, AND WEST GERMANY • AFFILIATES IN AUSTRALIA, CANADA, JAPAN, MEXICO, SINGAPORE, SOUTH AFRICA, TAIWAN, UNITED KINGDOM, AND THE UNITED STATES.

NALCO Registered Trademarks of Nalco Chemical Company ©1982 Nalco Chemical Company

NALCO

DIRECTIONS FOR USE

RANGE

50 – 1000 ppm nitrite (as $NaNO_2$)

PROCEDURE

1. Fill drop-count tubes (P0010) to the 10-ml mark with sample.
2. Add one level 0.5-g scoop (P0014) of S0125 (NTD-1) to the tube and mix until completely dissolved.
3. Immediately add S0126 (NTD-2) rapidly one drop at a time, using the glass dropper pipet (P0011). Hold the pipet vertically and mix thoroughly by swirling the tube after adding each drop. Continue adding drops until the sample color remains pink for 30 seconds. Count the number of drops used.

   Warning: This procedure is not intended for samples containing high levels of dissolved organic material (e.g., ethylene glycol) that will react with S0126. The results will be higher than the actual concentration and unreliable. A continual fading endpoint that persists for more than 5 drops is an indication of this type of interference.

CALCULATION

ppm nitrite (as $NaNO_2$) = 50 X (number of drops S0126 used)

To convert ppm nitrite (as $NaNO_2$) to ppm NO_2, multiply by 0.67.

Note: For a 5-ml sample, multiply the number of drops of S0126 used by 100.

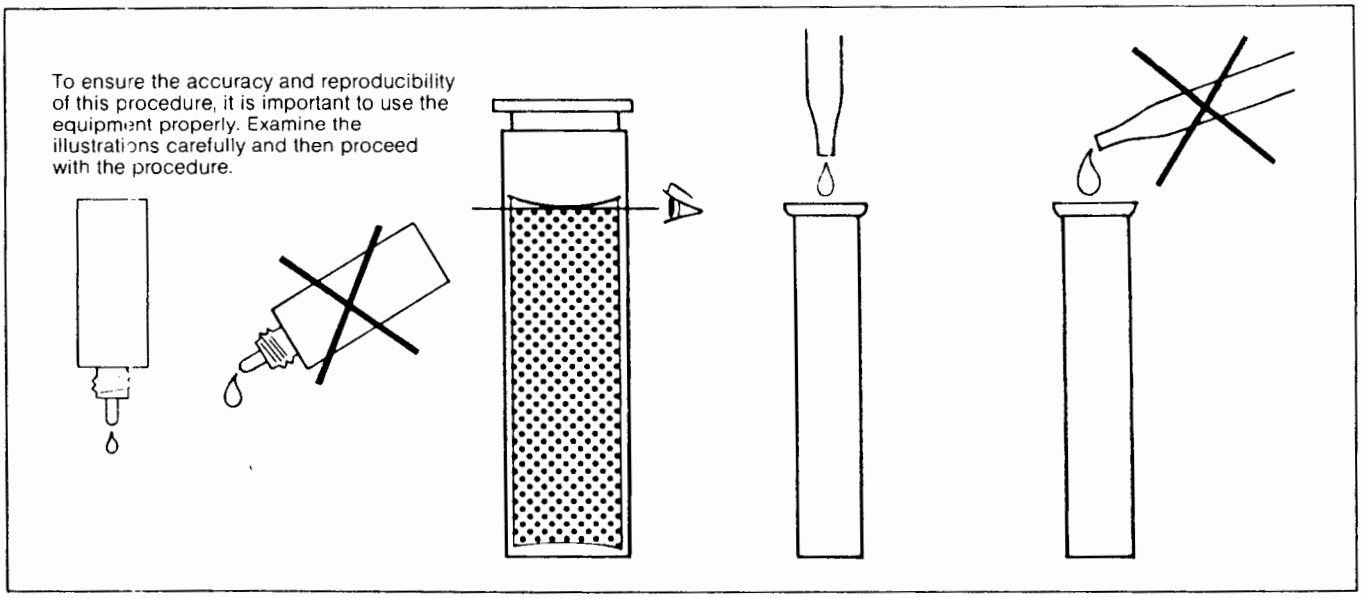

Caution: Pipetting by mouth is a dangerous practice and should not be done. Use a bulb, autopipetter, or alternative means.

INDUSTRIAL DIVISION
UTILITY CHEMICALS

NALCO CHEMICAL COMPANY
4310 NORTH 75th STREET □ SUITE A □ SCOTTSDALE, ARIZONA 85251 □ AREA 602-941-3915
FAX 602-945-1791

June 29, 1988

Salt River Project
Navajo Generating Station
P. O. Box W
Page, Arizona 86040

Attention: Mr. Craig Hiserote, Chemical Supervisor

Subject: Closed Bearing Cooling Water System Inhibitor Recommendation

Dear Craig:

The present treatment program for the Navajo bearing cooling water systems consists of maintaining a 600 to 800 ppm residual of chromate in the system via addition of Nalco 8320. Chromate is very effective in maintaining low corrosion rates and inhibiting microbial activity in closed cooling water systems using soft water for makeup. However, chromate is a hazardous material and presents unusual problems in product handling and disposal of treated water in case of spills or system drains during outages.

Therefore, in order to reduce handling and disposal of hazardous chromate, it is recommended that an alternative, equally effective bearing cooling water treatment program be evaluated.

The program offering the most cost effective replacement for the present chromate program is Sure-Cool 1355. Sure-Cool 1355 is a liquid blend of ferrous and nonferrous corrosion inhibitors, a noncarbonate buffer and a leak detection dye. The main components are nitrite and borates with MBT for yellow metal corrosion inhibition. Physical and chemical properties are presented in the attached Product Bulletin. Handling precautions are contained in the attached Material Safety Data Sheet.

The recommended dosage of 1355 is 2 ounces per gallon of system capacity. Sure-Cool 1355 is not compatible with chromates. Therefore, for initial treatment, the systems should be drained, flushed, and then refilled with 1355 added at the 2 oz/gal rate. Subsequent control is achieved by maintaining a nitrite residual in the system of 600 to 625 ppm. Nalco Test Kit C0304 can be used to check nitrite residuals as detailed in the attached Field Systems Product Bulletin FS-304. The 1355 can be added through the bypass feeders using exactly the same procedure as was used with the chromate product.

Craig, I believe use of the Sure-Cool 1355 program is primarily beneficial from the standpoint of elimination of a hazardous material from the plant site. However, additional benefits in the area of minimal corrosion rates will also be achieved as demonstrated in the BCW systems at Coronado Generating Station where corrosion rates were less than 0.1 Mils per Year for both mild steel and 90-10 Cu-Ni over the last five years. I will plan on discussing the BCW systems in more detail on my next plant visit. If you have any questions in the meantime, please give me a call.

Sincerely,

Larry L. Gibbs
Account Manager
Utility Chemicals Group

LLG:ksn

cc: Dr. K. A. Hooton, SRP - Power Operations

Attachments: Product Bulletin 1355
Material Safety Data Sheet 1355
FS-304

Nalco
cc: Mr. Bruce Thompson, District Manager

Utility Chemicals | **Product Bulletin**

NALCO

SURE-COOL® 1355

CLOSED SYSTEM TREATMENT

Product Benefits

- Contains no chromate
- Can reduce equipment maintenance costs
- Multifunctional — reduces the number of chemicals required

Principal Uses

SURE-COOL 1355 is a nitrite-based liquid chemical treatment designed to control corrosion in closed cooling systems, chiller water systems, and hot water heating systems.

General Description

SURE-COOL 1355 is a multifunctional treatment that contains a combination of corrosion inhibitors, a buffer system, and a treatment indicator dye.

SURE-COOL 1355 can be used with both ethylene glycol and alcohol based antifreezes.

Form	Liquid
Color	Red
Odor	Faint organic
Density	10.1 lb/gal
pH (Neat)	11–12
Freeze Point	15°F becomes slushy
Freeze-Thaw Recovery	Complete
Solubility	Complete in water; 15% in ethylene glycol

Application

SURE-COOL 1355 may be fed directly to the cooling system or in dilution water. Dilution should be made with soft water. The specific dosage of SURE-COOL 1355 will vary depending upon the operating characteristics of your system, the water chemistry, and the severity of problems encountered. Your Nalco representative can recommend the optimum dosage necessary to ensure maximum program performance for your system.

SURE-COOL 1355 is noncorrosive to materials normally used in feeding systems. SURE-COOL 1355 does not affect rubber gaskets or other non-metallics in the system. For specific feeding and material compatibility instructions, consult your Nalco representative.

SURE-COOL 1355 should not be used in potable water systems or in systems where potable systems connect with the treated water systems.

Shipping

SURE-COOL 1355 is available in bulk quantities or in 55-gallon non-returnable steel drums weighing approximately 555 pounds net.

The product is shipped from the nearest manufacturing or warehousing facility.

(Continued on Reverse Side)

NALCO CHEMICAL COMPANY
UTILITY CHEMICALS
2901 BUTTERFIELD ROAD □ OAK BROOK, ILLINOIS 60521

SUBSIDIARIES IN ARGENTINA, AUSTRIA, BRAZIL, CHILE, COLOMBIA, ECUADOR, FINLAND, FRANCE, HOLLAND, HONG KONG, ITALY, PHILIPPINES, SAUDI ARABIA, SPAIN, SWEDEN, VENEZUELA, AND WEST GERMANY • AFFILIATES IN AUSTRALIA, CANADA, JAPAN, MEXICO, SINGAPORE, SOUTH AFRICA, TAIWAN, UNITED KINGDOM, AND THE UNITED STATES.

Registered Trademarks of Nalco Chemical Company ©1983 Nalco Chemical Company

NALCO

Handling and Storage

SURE-COOL 1355 is an alkaline solution and should be handled with caution. Avoid contact with skin, eyes, and clothing. Goggles or face shield are recommended for handling. In case of contact, immediately flush with large amounts of water for at least 15 minutes; for eyes, also get medical attention. Do not take internally. Keep out of reach of children.

Recommended in-plant storage limit is one year.

Memo

Date July 29, 1988

TO Robert Hutzel, Risk Management/Industrial Hygiene

FROM Ron F. Chapman, Supervisor, Purchasing/Stores, NGS

RE: HAZARDOUS WASTE

Enclosed please find the Summary of Hazardous Waste Accumulation, Disposal and Recycling for the month of July 1988.

Ron Chapman By Darryl Palmer
Ron F. Chapman

Attachments

cc: Art Oros

ATTACHMENT 17

22-9006 187-4400 REV. 8/118

TRANSMISSION REPORT

THIS DOCUMENT (REDUCED SAMPLE ABOVE)
WAS SENT

** COUNT **
# 6

*** SEND ***

NO	REMCTE STATION I. D.	START TIME	DURATION	#PAGES	COMMENT
1	6022362505	8- 3-88 12:27PM	10'06"	6	
		TOTAL	0:10'06"	6	

XEROX TELECOPIER 7020

Memo

Date July 29, 1988

TO Robert Hutzel, Risk Management/Industrial Hygiene

FROM Ron F. Chapman, Supervisor, Purchasing/Stores, NGS

RE: HAZARDOUS WASTE

Enclosed please find the Summary of Hazardous Waste Accumulation, Disposal and Recycling for the month of July 1988.

Ron Chapman By Darrigh Palmer
Ron F. Chapman

Attachments

cc: Art Oros

53-9008 137-4400 REV. 8/81

TRANSMISSION REPORT

THIS DOCUMENT (REDUCED SAMPLE ABOVE)
WAS SENT

** COUNT **
# 6

*** SEND ***

NO	REMOTE STATION I. D.	START TIME	DURATION	#PAGES	COMMENT
1	236 2987	8- 3-88 11:56AM	8'53"	6	
		TOTAL	0:08'53"	6	

XEROX TELECOPIER 7020

Form #_____
(03/02/88)

SUMMARY OF HAZARDOUS WASTE ACCUMULATION, DISPOSAL AND RECYCLING DURING THE MONTH OF JULY, 1988

FACILITY: NAVAJO GENERATING STATION EPA ID#: AZD0474452426

DEPARTMENT: WAREHOUSE DIVISION: POWER OPERATION

		On-Site Accumulation			Disposal/Recycle				
Container #	Container Contents	Accum Start Date	Total Quantity	Units	Date Recd @ Central Storage	Manifest Shipping Date	Manifest Number	Manifest Quantity	Manifest Units
NGS-88-562	WASTE PAINT	6/9/88	471	LB	6/9/88	7/28/88	88099	471	LB
NGS-88-568	WASTE PAINT	6/29/88	401	LB	6/29/88	7/28/88	88099	401	LB
NGS-88-569	WASTE SOLVENT		328	LB					
NGS-88-570	WASTE SOLVENT		227	LB					
NGS-88-571	WASTE SOLVENT		88	LB					
NGS-88-572	WASTE PAINT	7/22/88	383	LB	7/22/88	7/28/88	88099	383	LB
NGS-88-573	WASTE PAINT		267	LB					
		TOTAL	12,720	LB			TOTAL	11,678	LB

Prepared by: COLLIER GREYHAT (Print Name) Collier Greyhat (Signature) 7-29-88 (Date)

Approved by: Ron Chapman By Darryl H. Palmer (Print Name) Darryl H. Palmer (Signature) 8/3/88 (Date)

(See Reverse Side)

Form #_____
(03/02/88)

SUMMARY OF HAZARDOUS WASTE ACCUMULATION, DISPOSAL AND RECYCLING DURING THE MONTH OF JULY, 1988

FACILITY: NAVAJO GENERATING STATION EPA ID#: AZD074452426

DEPARTMENT: WAREHOUSE DIVISION: POWER OPERATION

		On-Site Accumulation			Disposal/Recycle				
Container #	Container Contents	Accum Start Date	Total Quantity	Units	Date Recd @ Central Storage	Manifest Shipping Date	Manifest Number	Manifest Quantity	Manifest Units
NGS-88-547	WASTE DUSBLOC 425	5/7/88	377	LB	5/7/88	7/28/88	88099	377	LB
NGS-88-548	WASTE DUSBLOC 425	5/7/88	368	LB	5/7/88	7/28/88	88099	368	LB
NGS-88-549	WASTE DUSBLOC 425	5/7/88	626	LB	5/7/88	7/28/88	88099	626	LB
NGS-88-550	WASTE DUSBLOC 425	5/7/88	301	LB	5/7/88	7/28/88	88099	301	LB
NGS-88-551	WASTE DUSBLOC 425	5/7/88	375	LB	5/7/88	7/28/88	88099	375	LB
NGS-88-552	WASTE DUSBLOC 425	5/7/88	441	LB	5/7/88	7/28/88	88099	441	LB
NGS-88-553	WASTE DUSBLOC 425	5/7/88	516	LB	5/7/88	7/28/88	88099	516	LB
NGS-88-554	WASTE DUSBLOC 425	5/7/88	512	LB	5/7/88	7/28/88	88099	512	LB
NGS-88-555	WASTE DUSBLOC 425	5/7/88	519	LB	5/7/88	7/28/88	88099	519	LB
NGS-88-556	WASTE DUSBLOC 425	5/7/88	513	LB	5/7/88	7/28/88	88099	513	LB
NGS-88-560	WASTE PAINT	5/16/88	497	LB	5/16/88	7/28/88	88099	497	LB
NGS-88-561	WASTE SOLVENT	6/10/88	424	LB	6/10/88	7/28/88	88099	424	LB
		TOTAL				TOTAL			

Prepared by: COLLIER GREYHAT (Print Name) Collier Greyhat (Signature) 7-29-88 (Date)

Approved by: Ron Chapman By Darryl H. Palmer (Print Name) Darryl H. Palmer (Signature) 8/3/88 (Date)

(See Reverse Side)

Form #_____
(03/02/88)

SUMMARY OF HAZARDOUS WASTE ACCUMULATION, DISPOSAL AND RECYCLING DURING THE MONTH OF JULY, 19 88

FACILITY: NAVAJO GENERATING STATION EPA ID#: AZD074452426

DEPARTMENT: WAREHOUSE DIVISION: POWER OPERATION

		On-Site Accumulation			Disposal/Recycle				
Container #	Container Contents	Accum Start Date	Total Quantity	Units	Date Recd @ Central Storage	Manifest Shipping Date	Manifest Number	Manifest Quantity	Manifest Units
NGS-88-490	WASTE SOLVENT		132	LB					
NGS-88-506	WASTE SOLVENT	6/29/88	418	LB	6/29/88	7/28/88	88099	418	LB
NGS-88-521	WASTE SOLVENT	5/16/88	431	LB	5/16/88	7/28/88	88099	431	LB
NGS-88-525	WASTE ALCOHOL	5/3/88	417	LB	5/3/88	7/28/88	88099	417	LB
NGS-88-528	WASTE SOLVENT	6/13/88	447	LB	6/13/88	7/28/88	88099	447	LB
NGS-88-532	WASTE DIELECTRIC COMPOUND	5/5/88	256	LB	5/5/88	7/28/88	88099	256	LB
NGS-88-536	WASTE PAINT	5/6/88	503	LB	5/6/88	7/28/88	88099	503	LB
NGS-88-540	WASTE PAINT	5/6/88	624	LB	5/6/88	7/28/88	88099	624	LB
NGS-88-543	WASTE DUSBLOC 425	5/7/88	486	LB	5/7/88	7/28/88	88099	486	LB
NGS-88-544	WASTE DUSBLOC 425	5/7/88	414	LB	5/7/88	7/28/88	88099	414	LB
NGS-88-545	WASTE DUSBLOC 425	5/7/88	460	LB	5/7/88	7/28/88	88099	460	LB
NGS-88-546	WASTE DUSBLOC 425	5/7/88	498	LB	5/7/88	7/28/88	88099	498	LB
		TOTAL					TOTAL		

Prepared by: COLLIER GREYHAT (Print Name) Collier Greyhat (Signature) 7-29-88 (Date)

Approved by: Ron Chapman By Darryl H. Palmer (Print Name) Darryl H. Palmer (Signature) 8/3/88 (Date)

(See Reverse Side)

Memo

Date July 29, 1988

TO Robert Hutzel, Risk Management/Industrial Hygiene

FROM Ron F. Chapman, Supervisor, Purchasing/Stores, NGS

RE: **HAZARDOUS WASTE**

Enclosed please find the Summary of Hazardous Waste Accumulation, Disposal and Recycling for the month of July 1988.

Ron Chapman By Darryl Palmer
Ron F. Chapman

Attachments

cc: Art Oros

DRUM SAMPLING AND
ANALYSES INVESTIGATION
PHASE 2
NAVAJO GENERATING STATION
PAGE, ARIZONA

JOB NO. 2175J235

ATTACHMENT 18

WESTERN TECHNOLOGIES INC.
The Quality People

ARIZONA

Phoenix
3737 East Broadway Road
P.O. Box 21387
Phoenix, Arizona 85036
(602) 437-3737

Mesa
Gateway Plaza
663 West Second Avenue, No. 10
Mesa, Arizona 85202
(602) 834-3964

Sun City
17200 North Dysart Road, No. 13
P.O. Box 2431
Sun City, Arizona 85372
(602) 975-2154

Flagstaff
2400 East Huntington Drive
Flagstaff, Arizona 86001
(602) 774-8708

Pinetop
H C 62, Box 19981
Pinetop, Arizona 85935
(602) 367-3011

Tucson
423 South Olsen Avenue
Tucson, Arizona 85719
(602) 624-8896

Sierra Vista
1827 South Paseo San Luis
Sierra Vista, Arizona 85635
(602) 458-0364

Laughlin/Bullhead City
460 Main Street
P.O. Box 2779
Bullhead City, Arizona 86430
(602) 754-2271

NEW MEXICO

Albuquerque
3808 Academy Parkway North, N.E.
Albuquerque, New Mexico 87109
(505) 345-6586

Farmington
400 South Lorena Avenue
Farmington, New Mexico 87401
(505) 327-4966

NEVADA

Las Vegas
300 West Boston Avenue
Las Vegas, Nevada 89102
(702) 382-7483

WESTERN TECHNOLOGIES INC.

3737 East Broadway Road
P.O. Box 387
Phoenix, Arizona 85036
(602) 437-3737

RECEIVED
Material Reclamation
1-20-86

Salt River Project
Material Reclamation Division
P. O. Box 52025
Phoenix, Arizona 85072-2025

January 7, 1986

Attn: Mr. Art Oros

Re: Drum Sampling and Analyses Investigation
Phase 2 (Navajo Generating Station) Job No. 2175J235

This letter transmits our report of this date titled, "Drum Sampling and Analyses Investigation; Salt River Project, Phase 2 - Navajo Generation Station, Page, Arizona."

This work was done in accordance with your verbal instructions, Western Technologies Inc. Proposal No. 2175A073 and Salt River Project Purchase Order No. VV06772 CBK.

Sampling and chemical analyses for the disposal of 53 drums of waste chemicals located at Salt River Project (SRP) Navajo Generating Station facility near Page, Arizona were performed. Hazardous characteristics of the waste materials were determined from the chemical analyses. Chain-of-custody records were maintained during the sampling process.

Generator's waste material profile sheets were prepared to provide adequate information regarding proper identification, transportation, and disposal of these waste materials. Hazardous waste manifests and labels were also prepared to accompany the waste materials off-site to their final destination.

Sincerely,
WESTERN TECHNOLOGIES INC.

Dennis Green

Dennis Green
Project Manager, Environmental
and Chemical Materials Management

Reviewed by: R. Bruce Scott, P.E.
Director, Environmental
and Chemical Materials
Management

Registered Professional Engineer (Chemical)
CERTIFICATE NO. 8216
ROBERT BRUCE SCOTT
Date Signed 1-20-86
ARIZONA, U.S.A.

jc

Copies to: Addressee (3)

TABLE OF CONTENTS

		Page
1.	INTRODUCTION	1
2.	TEST PROGRAM	1
3.	TEST RESULTS	4
4.	DISCUSSION OF TEST RESULTS	4
5.	PROFILE SHEETS, MANIFESTS AND LABELS	5

Figure 1 VACSAM Sampler

Table I Chain-of-Custody Records

Appendix A Laboratory Report
Appendix B Profile Sheets
Appendix C Manifests

DRUM SAMPLING AND ANALYSES INVESTIGATION
SALT RIVER PROJECT
PHASE 2 - NAVAJO GENERATING STATION
PAGE, ARIZONA

Job No. 2175J235

1. INTRODUCTION

Fifty-three drums containing waste materials located at the Navajo Generating Station facility near Page, Arizona are to be removed and disposed of. Therefore, a testing project was conducted to determine if the drum contents were hazardous and to show compliance with the State of Arizona and federal hazardous waste rules and regulations. This report presents the results of these tests.

2. TEST PROGRAM

A. Sampling

Samples were taken from the drums by use of a vacuum operated composite liquid waste sampler (VACSAM). The VACSAM operates by applying a vacuum source (VACSAM pump) to a sample bottle which, in turn, is connected to a sample tube, the lower end of which is submerged in the material to be sampled. See Figure 1. Sample collection with the VACSAM utilized disposable sampling apparatus. This eliminated the need for sampler cleaning, the possibility of sample contamination, and expedited the sample collection process.

Prior to sampling, all of the drums were numbered or marked for drum/sample identification purposes. The numbers were applied by using spray paint.

All samples were placed in glass sampling containers which were tightly closed. Minimal handling and exposure to the air were accomplished.

Two samples were collected from each drum. Both samples were retained by Western Technologies Inc. One sample was used for chemical analyses while the other sample is being held for submittal to Chemical Waste Management, Inc. as a representative sample for waste disposal. Western Technologies Inc. can provide this service upon your request.

In accordance with information supplied by Salt River Project personnel, many of the drums were suspected to contain waste materials with the same chemical properties (solvents, paints, and hydrazine) which allowed for composite samples.

Individual and composite samples were collected. Composite samples consisted of collecting a sample from several drums (2-8) containing the same type of waste material. Because of the large number of drums involved, composite samples were valuable in reducing the total number of samples collected. A total of 15 samples were collected representing 35 drums. Another 18 drums of hydrazine which are to be disposed of were also present making a total of 53 drums for disposal. The hydrazine was new and unused, but not usable at any of the SRP facilities. Since the hydrazine has not been contaminated, no sampling or chemical analyses are needed to complete profile sheets for waste disposal. Material Safety Data Sheets (MSDS) were used to determine the chemical composition and concentrations.

Chain-of-custody records were prepared and are presented as Table I. The chain-of-custody records include the sampling methods used and the condition of the sampled drums regarding their use for transportation and disposal of the waste materials.

B. Chemical Analyses

Chemical analyses as required in the Code of Federal Regulations, Title 40, Part 262.11 (40 CFR 262.11) were performed to determine if the waste materials were hazardous.

A list of all the chemical analyses performed on the samples is presented below. All of the listed analyses were not performed on each sample. The waste type of each sample dictated which analyses were performed. See the laboratory report (Appendix A) for specifics regarding chemical analyses performed.

1. pH
2. Flash point (ignitability)
3. Water Mix (reactivity)
4. Physical description
5. Total EP toxic metals including: arsenic, barium, cadmium, chromium, lead, mercury, selenium, and silver
6. Gas chromatograph/mass spectrometer (GC/MS) solvent screen (the GC/MS solvent screen included a search for 70,000 organic compounds)
7. PCB's
8. Percent water
9. Percent alkalinity

TECHNOLOGIES INC.

P.O. Box 21387
Phoenix, Arizona 85036
(602) 267-3737

LABORATORY REPORT

REVISED 12/10/85

Salt River Project
Phase 2&3

Job No. 858536-8565
Lab./Invoice No. 2175W235-2,3
Date of Report 11/14/85
Reviewed By D. Casavant

Drum Sampling and Analyses Investigation

Phoenix, Arizona

Oil,grease,paint,solvent··· Sampled By WT/Green Date --

Waste drums Submitted By WT/Green Date 10/14/85

As below Authorized By -- Date --

RESULTS

Thirty samples were received for analysis of hazardous characteristics including pH, flash point, water, metals, PCB's and solvents. Analysis for pH was EPA 9040 where applicable. Samples were analyzed for flash point using EPA 1010, moisture using Karl Fischer titration, total metals digestion (EPA 3030) and metals analysis using atomic absorption and inductively coupled plasma emission spectrometry. Analysis for polychlorinated biphenyls (PCB's) was in accordance with EPA 8080 and solvent identification used gas chromatography/mass spectrometry. The results of these analyses are attached.

3. TEST RESULTS

Chemical test results for the drum samples are presented in Appendix A. All chemical tests were performed in accordance with EPA methods and Chemical Waste Management, Inc. requirements.

4. DISCUSSION OF TEST RESULTS

Chemical analyses of many of the samples exhibited hazardous characteristics or contaminants as defined by the Resource Conservation and Recovery Act (RCRA) which is presented in 40 CFR 261 Subpart C and D.

The following information describes the hazardous characteristics identified from chemical analyses performed on the samples.

Drum Nos. N206 and 235 (Nalco 1336) exhibited high pH values, greater than 12.5 (corrosive), a hazardous characteristic.

Drum Nos. N201, 244, 213-220 (composite), 221-228 (composite), and (230, 232, 242, 243 (composite) exhibited several hazardous characteristics. Xylenes, 1,1,1-trichloroethane, toluene, ethylbenzene, and isopropanol, all of which are listed hazardous wastes, were present in many of the samples in varying concentrations (0.02-4.3%). One to four of these solvents were present in all of these five samples. Arsenic, barium, chromium, lead and low flash and burn points of less than 140°F (ignitable) in these samples also identifies these wastes as hazardous.

Drum N234 (omala oil) contained arsenic (10 mg/kg), chromium (6 mg/kg), and lead (5 mg/kg), all of which EP toxic metals.

Drum Nos. N200, 202, 203, 205, 207, 208, 211, and 212 did not exhibit any hazardous characteristics. These drums appear to be various paint type wastes. Drum No. N204 which appears to be a grease waste also did not exhibit any hazardous characteristics.

5. PROFILE SHEETS, MANIFESTS AND LABELS

Six generator's waste material profile sheets were prepared for the waste drums. These documents identify the materials by hazardous waste type and provide adequate information regarding proper transportation and disposal of the waste materials. If the profile sheets appear satisfactory, the authorized signature (below Part H) should be completed by Salt River Project personnel and forwarded to Chemical Waste Management, Inc. Profile sheet copies are presented in Appendix B.

Drum numbers were typed on the top of each profile sheet except for F26956 (hydrazine), to help identify which drum is represented by which profile sheet.

The chain-of-custody records include information regarding the condition of the drums sampled. See Table I. The container condition was determined by visual observation as appearing to be OK or Repack (RP). All of the drums appeared to be in good condition for transportation. Drum Nos. N218, 219, 220, 221 and 235 were in overpack drums.

Hazardous waste labels to identify the waste drums for transportation and disposal of the drums were prepared. Drum numbers were written on the bottom left hand corner of each label to identify which label(s) go on which drum.

Uniform hazardous waste manifests were also prepared to accompany the wastes off-site to their final destination. The designated TSD Facility (No. 9), EPA I.D. No. (No. 10), number of containers (No. 12), total quantity (No. 13), and the generator's signature (No. 16) need to be completed by Salt River Project personnel when the transporter arrives to pick up the wastes. See Appendix C for manifest copies.

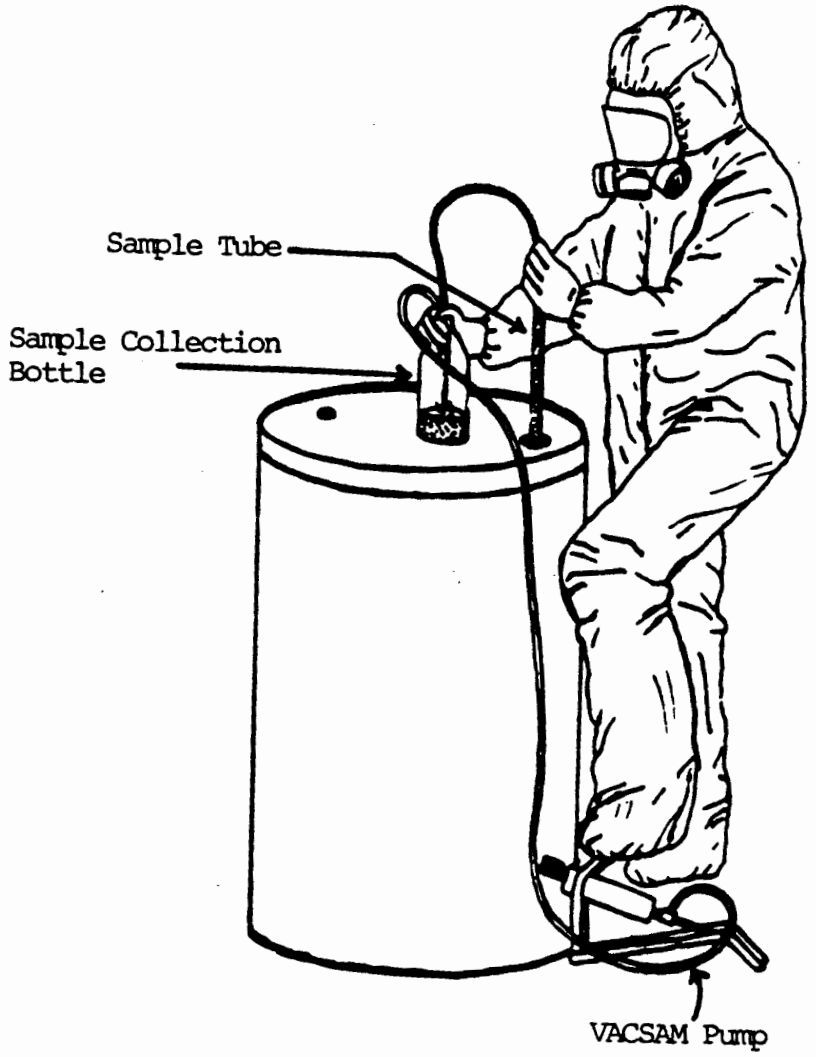

VACSAM used to collect samples for chemical identification of drummed hazardous waste

FIGURE 1

Phoenix, Arizona 85036

Table 1

CHAIN OF CUSTODY RECORD

JOB NO. 21755235

PROJECT NAME: Drum Sampling and Analyses Investigation

SAMPLERS: (Signature) Rodrick Stipe

	SAMPLE IDENT. (Drum #)	DATE	TIME	COMP	GRAB	SAMPLE LOCATION	NO. OF CONTAINERS	VACSAM	Soil Scoop	Soil Auger	Container Cond. OK or Repack (RP)		REMARKS (Physical Appearance, etc.)	LAB I.D.
Unknown	N200	10-10-85	0903		X	Salt River Project 36	2	X			OK		Bilayered, light brown/white sludgy liquid	8585
	N201	10-10-85	0910		X	Navajo Generating Station 37	2	X			OK		Black solvent-like liquid	85
	N203, 205, 207	10-10-85	0915	X		Page, Arizona 38	2	X			OK	Composite 3 drums	White-tan sludgy liquid (1-50% liquid)	85
	N202	10-10-85	0924		X	39	2	X			OK		Bilayer, brown/tan liquid (top layer viscous)	85
	N206	10-10-85	0928		X	40	2	X			OK		Brown, viscous liquid (oil-grease like)	854
	N209	10-10-85	0938		X	41	2	X			OK		Brown mineral oil-like liquid	854
	N212	10-10-85	0945		X	42	2	X			OK		Dirty green viscous liquid	854
	N204	10-10-85	0950		X	43	2	X			OK		Brown, sludgy resinous material, no free liquids	854
	N208, N211	10-10-85	0955	X		44	2	X			OK	Composite 2 drums	White lanolin-grease like material, no free liquids	854
													Note: The above 12 drums (N200 - N212)	~~8545~~
													all had less than 4 in. of material in drums	~~8546~~
Used Solvents	N213 - N220	10/10/85	1005	X			2	X			OK	Composite 8 drums	multilayered; gray, brown, milk liquid. Appears to be solvent, paint and oil-like wastes	8545
	N221 - N228	10/10/85	1038	X			2	X			OK	Composite 8 drums	↓	8546
	N230, 232, 242, 243	10/10/85	1105	X			2	X			OK	Composite 4 drums	↓	8547
Unknown	N244	10-10-85	1310		X	↓	2	X			OK		Bilayered, black/orange oozing liquid, Appears to be oil on top of rusty water	8548

Relinquished by: (Signature)	Date / Time	Received by: (Signature)	Relinquished by: (Signature)	Date / Time	Received by: (Signature)
Rodrick Stipe	10/10/85 1920	Dennis Green			

Relinquished by: (Signature)	Date / Time	Received for Laboratory by: (Signature)	Date / Time	Remarks
Dennis Green	10-14-85 0800	H. Parson	10-14-85 0800	Only one sample per sample ident. ~~top~~.

Page 8

Table 1

CHAIN OF CUSTODY RECORD

JOB NO. 21755235

PROJECT NAME: Drum Sampling and Analyses Investigation

SAMPLERS: (Signature) Roderick Stipe

	SAMPLE IDENT. (Drum #)	DATE	TIME	COMP	GRAB	SAMPLE LOCATION	NO. OF CONTAINERS	VACSAM	Soil Scoop	Soil Auger	Container Cond. OK or Repack (RP)		REMARKS (Physical Appearance, etc.)	LAB I.D.
Contaminated Omaha Oil	N234	10/10/85	1325		X	Salt River Project	2	X			OK		Dark brown-black grease like material	8549
Nalco 1336	N235	10/10/85	1340		X	Navajo Generating Station	2	X			OK		Brown (heavy) liquid	8550
						Page, Arizona								
	Antifreeze Composite	10/14/85	1404	X		↓	2	X			OK	Composite 4 drums	Green, watery liquid (antifreeze) -Composite from drums N229, N231, N247, N248-	-No analys

Relinquished by: (Signature)	Date / Time	Received by: (Signature)	Relinquished by: (Signature)	Date / Time	Received by: (Signature)
Roderick Stipe	10/10/85 19:20	Dennis Green			

Relinquished by: (Signature)	Date / Time	Received for Laboratory by: (Signature)	Date / Time	Remarks
Dennis Green	10/14/85 0800	N. Parson	10-14-85 0800	

Page 5

Salt River Project
Invoice No. 2175W235-2
Lab. No. 858536 - 858565

Parameter	Sample Identification N200 (858536)
pH, S.U.	2.8
Flash point, °F	>200.
Moisture, %	65.
Alkalinity, %	--
Physical Description	
Odor	Grease
Color	Orange/white
Viscosity	High/high
Physical State	Liquid/sediment
Number of layers	2
Free liquids, %	5
Water Mix Top/Bottom	
Reactive	Negative/negative
Soluble	Insoluble/soluble
Heavier/Lighter	Lighter/--
Emulsifies	--
Precipitates	--
Total metals, mg/L	
Arsenic	<5.
Barium	<1.
Cadmium	<1.
Chromium	<1.
Lead	<5.
Mercury	<0.1
Selenium	<0.5
Silver	<1.
PCB, mg/kg	--
Solvent Screen, mg/kg	ND

Salt River Project
Invoice No. 2175W235-2
Lab. No. 858536 - 85856.

Parameter	Sample Identification N201 (858537)
pH, S.U.	4.8
Flash point, °F	70.
Moisture, %	0.01
Alkalinity, %	--
Physical Description	
Odor	Organic
Color	Black
Viscosity	Moderate
Physical State	Liquid
Number of layers	1
Free liquids, %	100
Water Mix Top/bottom	
Reactive	Negative
Soluble	Insoluble
Heavier/lighter	Lighter
Emulsifies	--
Precipitates	--
Total metals, mg/L	
Arsenic	5.4
Barium	<1.
Cadmium	<1.
Chromium	<1.
Lead	<5.
Mercury	<0.1
Selenium	<0.5
Silver	<1.
PCB, mg/kg	<5.
Solvent Screen, mg/kg	
Xylenes	160.

Salt River Project
Invoice No. 2175W235-2
Lab. No. 858536 - 858565

Parameter	Sample Identification N202 (858539
pH, S.U.	3.2/3.7
Flash point, °F	>200.
Moisture, %	0.07/77.
Alkalinity, %	--
Physical Description	
Odor	Organic
Color	Brown/Clear
Viscosity	High/moderate
Physical State	Liquid
Number of layers	2
Free liquids, %	95
Water Mix Top/bottom	
Reactive	Negative/negative
Soluble	insoluble/soluble
Heavier/lighter	Heavier/--
Emulsifies	--
Precipitates	--
Total metals, mg/L	
Arsenic	<5.
Barium	<1.
Cadmium	<1.
Chromium	<1.
Lead	<5.
Mercury	<0.1
Selenium	<0.5
Silver	<1.
PCB, mg/kg	<5.
Solvent Screen, mg/kg	ND/ND

Salt River Project
Invoice No. 2175W235-2
Lab. No. 858536 - 858565

Parameter	Sample Identification N203,205,207 (858538)
pH, S.U.	3.5/3.7
Flash point, °F	>200.
Moisture, %	20.
Alkalinity, %	--
Physical Description	
Odor	Paint
Color	Orange/white
Viscosity	Moderate/high
Physical State	Liquid/sediment
Number of layers	2
Free liquids, %	45
Water Mix	
Reactive	Negative
Soluble	Insoluble
Heavier/lighter	Lighter
Emulsifies	--
Precipitates	--
Total metals, mg/L	
Arsenic	<5.
Barium	<1.
Cadmium	<1.
Chromium	<1.
Lead	<5.
Mercury	<0.1
Selenium	<0.5
Silver	<1.
PCB, mg/kg	--
Solvent Screen, mg/kg	ND

Salt River Project
Invoice No. 2175W235
Lab. No. 858536 - 858565

Parameter	Sample Identification #N206 (858540)
pH, S.U.	12.7
Flash point, °F	>200.
Moisture, %	26.
Alkalinity, %	11.8
Physical Description	
Odor	Organic
Color	Brown
Viscosity	High
Physical State	Liquid
Number of layers	1
Free liquids, %	100
Water Mix	
Reactive	Negative
Soluble	Slightly soluble
Heavier/lighter	Heavier
Emulsifies	--
Precipitates	--
Total metals, mg/L	
Arsenic	<5.
Barium	<1.
Cadmium	<1.
Chromium	<1.
Lead	<5.
Mercury	<0.1
Selenium	<0.5
Silver	1.8
PCB, mg/kg	--
Solvent Screen, mg/kg	ND

Salt River Project
Invoice No. 2175W235-2
Lab. No. 858536 - 858565

REVISED 12/10/85

Parameter	Sample Identification #N209 (858541)
pH, S.U.	4.5
Flash point, °F	>200.
Moisture, %	0.83
Alkalinity, %	--
Physical Description	
Odor	Paint
Color	Orange
Viscosity	Moderate
Physical State	Liquid
Number of layers	1
Free liquids, %	100
Water Mix	
Reactive	Negative
Soluble	Insoluble
Heavier/lighter	--
Emulsifies	--
Precipitates	yes
Total metals, mg/L	
Arsenic	5.1
Barium	<1.
Cadmium	<1.
Chromium	<1.
Lead	<5.
Mercury	<0.1
Selenium	<0.5
Silver	<1.
PCB, mg/kg	<5.
Solvent Screen, mg/kg	ND

Salt River Pro' ct
Invoice No. 21,5W235-2
Lab. No. 858536 - 858565

Parameter	Sample Identification #N212 (858542)
pH, S.U.	4.1
Flash point, °F	>200.
Moisture, %	27.
Alkalinity, %	--
Physical Description	
Odor	Organic
Color	Yellow
Viscosity	High
Physical State	Liquid/sediment
Number of layers	2
Free liquids, %	95
Water Mix	
Reactive	Negative
Soluble	Insoluble
Heavier/lighter	Heavier
Emulsifies	--
Precipitates	--
Total metals, mg/L	
Arsenic	<5.
Barium	<1.
Cadmium	<1.
Chromium	<1.
Lead	<5.
Mercury	<0.1
Selenium	<0.5
Silver	<1.
PCB, mg/kg	<5.
Solvent Screen, mg/kg	ND

Salt River Project
Invoice No. 2175W2..-2
Lab. No. 858536 - 858565

Parameter	Sample Identification # N204 (858543)
pH, S.U.	11.9
Flash point, °F	>200.
Moisture, %	--
Alkalinity, %	--
Physical Description	
Odor	Grease
Color	Brown
Viscosity	High
Physical State	Solid
Number of layers	1.
Free liquids, %	<1.
Water Mix	
Reactive	Negative
Soluble	Insoluble
Heavier/lighter	Heavier
Emulsifies	--
Precipitates	--
Total metals, mg/kg	
Arsenic	<5.
Barium	<1.
Cadmium	<1.
Chromium	<1.
Lead	<5.
Mercury	<0.1
Selenium	<0.5
Silver	1.5
PCB, mg/kg	--
Solvent Screen, mg/kg	ND

Salt River Project
Invoice No. 2175W235 2
Lab. No. 858536 - 858565

Parameter	Sample Identification N208,211 (858544)
pH, S.U.	3.2
Flash point, °F	>200.
Moisture, %	17.
Alkalinity, %	--
Physical Description	
Odor	Paint
Color	Orange/white
Viscosity	Moderate/high
Physical State	Liquid/sediment
Number of layers	2
Free liquids, %	5
Water Mix	
Reactive	Negative
Soluble	Insoluble
Heavier/lighter	Lighter
Emulsifies	Yes
Precipitates	--
Total metals, mg/L	
Arsenic	<5.
Barium	<1.
Cadmium	<1.
Chromium	<1.
Lead	<5.
Mercury	<0.1
Selenium	<0.5
Silver	<1.
PCB, mg/kg	--
Solvent Screen, mg/kg	ND

Salt River Project
Invoice No. 2175W235-2
Lab. No. 858536 - 858565
REVISED 12/10/85

Parameter	Sample Identification N213-N220 (858545)
pH, S.U.	6.3
Flash point, °F	*
Moisture, %	15.
Alkalinity, %	--
Physical Description	
Odor	Organic
Color	Brown
Viscosity	Moderate/high
Physical State	Suspended Matter/Liquid
Number of layers	2
Free liquids, %	95
Water Mix	
Reactive	Negative
Soluble	Insoluble
Heavier/lighter	Heavier
Emulsifies	--
Precipitates	--
Total metals, mg/L	
Arsenic	<5.
Barium	4.4
Cadmium	<1.
Chromium	<1.
Lead	480.
Mercury	<0.1
Selenium	<0.5
Silver	<1.
PCB, mg/kg	--
Solvent Screen, mg/kg	
Ethyl Benzene	7360. (0.74%)
Toluene	2870. (0.29%)
1,1,1-Trichloroethane	43300. (4.3%)
Xylenes	34100. (3.4%)

*Both layers boil out of apparatus at 106°F - no flash, but will burn at 80°F

Salt River Project
Invoice No. 2175W235-
Lab. No. 858536 - 858565

REVISED 12/10/85

Parameter	Sample Identification N221-N228 (858546)
pH, S.U.	6.4
Flash point, °F	*
Moisture, %	36.
Alkalinity, %	--
Physical Description	
Odor	Paint
Color	Purple/white
Viscosity	Moderate
Physical State	Liquid/sediment
Number of layers	3
Free liquids, %	90
Water Mix	
Reactive	Positive
Soluble	Insoluble
Heavier/lighter	--
Emulsifies	--
Precipitates	Yes
Total metals, mg/L	
Arsenic	<5.
Barium	4.9
Cadmium	<1.
Chromium	1.7
Lead	27.
Mercury	<0.1
Selenium	<0.5
Silver	<1.
PCB, mg/kg	--
Solvent Screen, mg/kg	
1,1,1-Trichloroethane	24200. (2.4%)
Xylenes	630.

*Both layers boil out of apparatus at 180°F - no flash, but will burn at 80°F

Salt River Project
Invoice No. 2175W235-2
Lab. No. 858536 - 858565

Parameter	Sample Identification N230,232,242,(858547) 243
pH, S.U.	6.9
Flash point, °F	*
Moisture, %	22.
Alkalinity, %	--
Physical Description	
Odor	Paint
Color	Purple
Viscosity	Moderate
Physical State	Liquid
Number of layers	1
Free liquids, %	100
Water Mix	
Reactive	Positive
Soluble	Insoluble
Heavier/lighter	--
Emulsifies	--
Precipitates	Yes
Total metals, mg/L	
Arsenic	<5.
Barium	3.2
Cadmium	<1.
Chromium	2.7
Lead	<5.
Mercury	<0.1
Selenium	<0.5
Silver	<1.
PCB, mg/kg	--
Solvent Screen, mg/kg	
Xylenes	300.

*Sample boils out of apparatus at 180 F- no flash but will burn at 80°F

Salt River Project
Invoice No. 2175W235-2
Lab. No. 858536 - 858565

Parameter	Sample Identification N244 (858548)
pH, S.U.	3.2/4.1
Flash point, °F	<60.
Moisture, %	0.24/86.
Alkalinity, %	--
Physical Description	
Odor	Solvent
Color	Purple/Orange
Viscosity	High/Moderate
Physical State	Liquid/Liquid
Number of layers	2
Free liquids, %	100
Water Mix Top/Bottom	
Reactive	Negative/negative
Soluble	Insoluble/soluble
Heavier/lighter	Lighter/--
Emulsifies	--
Precipitates	--
Total metals, mg/L	
Arsenic	<5.
Barium	<1.
Cadmium	<1.
Chromium	1.0
Lead	<5.
Mercury	<0.1
Selenium	<0.5
Silver	<1.
PCB, mg/kg	<5.
Solvent Screen, mg/kg	
Acetone	ND/1100. (0.11%)
Isopropanol	4600. (0.46%)/26530. (2.7%)
Toluene	22160. (2.2%)/2070. (0.21%)

Salt River Project
Invoice No. 2175W235-2
Lab. No. 858536 - 858565

Parameter	Sample Identification N234 (858549)
pH, S.U.	3.5
Flash point, °F	>200.
Moisture, %	--
Alkalinity, %	--
Physical Description	
Odor	Tar
Color	Black
Viscosity	High
Physical State	Semi Solid
Number of layers	1.
Free liquids, %	<1.
Water Mix	
Reactive	Negative
Soluble	Insoluble
Heavier/lighter	Heavier
Emulsifies	--
Precipitates	--
Total metals, mg/kg	
Arsenic	10.
Barium	<2.
Cadmium	<2.
Chromium	6.0
Lead	5.0
Mercury	<0.1
Selenium	<1.
Silver	<2.
PCB, mg/kg	<5.
Solvent Screen, mg/kg	ND

Salt River Project
Invoice No. 2175W235-
Lab. No. 858536 - 858565

Parameter	Sample Identification N235 (858550)
pH, S.U.	13.6
Flash point, °F	>200.
Moisture, %	52.
Alkalinity, %	12.
Physical Description	
Odor	Solvent
Color	Brown
Viscosity	Moderate
Physical State	Liquid
Number of layers	1
Free liquids, %	100
Water Mix	
Reactive	Negative
Soluble	Soluble
Heavier/lighter	--
Emulsifies	--
Precipitates	--
Total metals, mg/L	
Arsenic	<5.
Barium	<1.
Cadmium	<1.
Chromium	<1.
Lead	<5.
Mercury	<0.1
Selenium	<0.5
Silver	1.0
PCB, mg/kg	--
Solvent Screen, mg/kg	ND

Waste Management, Inc.

GENERATOR'S WASTE MANAGEMENT PROFILE SHEET

WASTE PROFILE SHEET CODE: PHX

TSDR: F26961

A. GENERAL INFORMATION Drum Nos. N201,213,214,215,216,217,218,219,220,221,222,223,224,225,226, 227,228,230,232,242,243,244

GENERATOR NAME: Salt River Project

TRANSPORTER: Chemical Waste Mgmt., Inc.

FACILITY ADDRESS: Navajo Generating Station
State Hwy 98, 5 mi east of Page, Arizona
Page, Arizona

TRANSPORTER PHONE: (602)243-6154

GENERATOR USEPA I.D.: AZD074452426

GENERATOR STATE I.D.: N/A

TECHNICAL CONTACT: Art Oros

TITLE: Supr. Matls. Reclaim

PHONE: (602)236-2244

NAME OF WASTE: Paint-Solvent Waste

PROCESS GENERATING WASTE: Industrial Painting and Maintenance

B. PHYSICAL CHARACTERISTICS OF WASTE

COLOR: Varies with paints used

ODOR: ☐ NONE ☒ MILD ☒ STRONG

DESCRIBE: Organic

PHYSICAL STATE @ 70°F: ☐ SOLID ☐ SEMI-SOLID ☒ LIQUID ☐ POWDER

LAYERS: ☒ MULTILAYERED ☒ BI-LAYERED ☐ SINGLE PHASED

FREE LIQUIDS: ☒ YES ☐ NO

VOLUME: 80-100%

☐ < 2 ☐ 7.1-10 ☐ N/A ☒ 2-4 ☐ 10.1-12.5 ☒ 4.1-6.9 ☐ > 12.5 ☐ 7 ☐ EXACT

SPECIFIC GRAVITY: ☐ < .8 ☐ 1.3-1.4 ☐ .8-1.0 ☐ 1.5-1.7 ☒ 1.1-1.2 ☐ > 1.7 ☐ EXACT

FLASH POINT: ☒ < 70°F ☐ > 200°F ☒ CLOSED CUP ☒ 70°F-100°F ☐ NO FLASH ☐ OPEN CUP ☐ 101°F-139°F ☐ EXACT ☐ 140°F-200°F

C. CHEMICAL COMPOSITION (TOTALS MUST ADD TO 100%)

Enamel base paint waste	5-30 %
Solvents including acetone, toluene	%
isopropanol, xylene, ethylbenzene	%
1,1,1-trichloroethane	2-20 %
Oil and aliphatic petroleum	%
Distillates	5-20 %
Water	1-85 %
	%
	%
	%

D. METALS ☒ TOTAL (PPM) ☐ EPA EXTRACTION PROCEDURE (mg/L)

ARSENIC (As)	0-10	SELENIUM (Se)	<0.5
BARIUM (Ba)	0-10	SILVER (Ag)	<1
CADMIUM (Cd)	<1	COPPER (Cu)	None
CHROMIUM (Cr)	0-25	NICKEL (Ni)	None
MERCURY (Hg)	<0.1	ZINC (Zn)	None
LEAD (Pb)	20-100	THALLIUM (Tl)	None
CHROMIUM-HEX (Cr + 6)	N/A		

E. OTHER COMPONENTS - TOTAL (PPM)

CYANIDES	None	PCB'S	None
SULFIDES	None	PHENOLICS	None

F. SHIPPING INFORMATION

HAZARDOUS MATERIAL? ☒ YES ☐ NO

PER SHIPPING NAME: Waste Flammable Liquid n.o.s.

CLASS: Flammable Liquid

I.D. NO.: UN1993

R.Q.: 1 lb

MOD OF SHIPMENT: ☐ BULK LIQUID ☐ BULK SOLID ☒ DRUM (TYPE/SIZE): 17E, 55 gal

PATED VOLUME: GALS. CUBIC YARDS OTHER: 10 drums

drums itially) PER: ☐ ONE TIME ☐ WEEK ☐ MONTH ☐ QUARTER ☒ YEAR ☐

G. HAZARDOUS CHARACTERISTICS

REACTIVITY: ☒ NONE ☐ PYROPHORIC ☐ SHOCK SENSITIVE ☐ EXPLOSIVE ☐ WATER REACTIVE ☐ OTHER

OTHER HAZARDOUS CHARACTERISTICS: ☒ NONE ☐ RADIOACTIVE ☐ ETIOLOGICAL ☐ PESTICIDE MANUFACTURING WASTE ☐ OTHER

USEPA HAZARDOUS WASTE? ☒ YES ☐ NO

USEPA HAZARDOUS CODE(S): F001, F003, F005

STATE HAZARDOUS WASTE? ☒ YES ☐ NO

STATE CODE(S): F001, F003, F005

H. SPECIAL HANDLING INFORMATION

rsonal Protective Equipment: Organic vapor canister or air supplied mask; face shield; oprene-like gloves

☐ ADDITIONAL PAGE(S) ATTACHED

I HEREBY CERTIFY THAT ALL INFORMATION SUBMITTED IN THIS AND ALL ATTACHED DOCUMENTS IS COMPLETE AND ACCURATE, AND THAT ALL KNOWN OR EXPECTED HAZARDS HAVE BEEN DISCLOSED.

ORIZED SIGNATURE TITLE DATE

PHX	F26961

WASTE PROFILE SHEET CODE

CERTIFICATION OF REPRESENTATIVE SAMPLE

GENERAL DIRECTIONS: IN ORDER TO DETERMINE WHETHER WE CAN ACCEPT THE SPECIAL WASTE DESCRIBED IN THE ABOVE NUMBERED PROFILE SHEET, WE MUST OBTAIN A REPRESENTATIVE SAMPLE OF THE WASTE. WE WILL ANALYZE THE SAMPLE TO VERIFY THE INFORMATION YOU HAVE PROVIDED US, SO IT IS PARTICULARLY IMPORTANT THAT THE SAMPLE BE TRULY REPRESENTATIVE. IN MOST CIRCUMSTANCES YOU WILL BE OBTAINING THE SAMPLE. HOWEVER, IN THOSE CASES IN WHICH WE OBTAIN THE SAMPLE, WE MUST ASK THAT ONE OF YOUR EMPLOYEES BE PRESENT TO DIRECT THE PARTICULAR SOURCE TO BE SAMPLED AND TO WITNESS THE SAMPLING. IN SUCH CASE, YOUR EMPLOYEE MUST SIGN THIS CERTIFICATION AS A WITNESS.

THIS CERTIFICATION MUST BE RETURNED, WITH THE REPRESENTATIVE WASTE SAMPLE, TO:

CHEMICAL WASTE MANAGEMENT, INC.
P.O. BOX 8741
PHOENIX, ARIZONA 85005

THE UNDERSIGNED CERTIFIES THAT HE/SHE OBTAINED A REPRESENTATIVE SAMPLE OF THE WASTE MATERIAL DESCRIBED IN THE "GENERATOR'S WASTE MATERIAL PROFILE SHEET" ABOVE REFERENCED, AND THAT THE FOLLOWING REPRESENTATIONS ARE TRUE AND CORRECT:

1. HOUR AND DATE OF SAMPLING: 1310, 10/10/85
2. SOURCE FROM WHICH SAMPLE TAKEN: 55 gal drum
3. EQUIPMENT AND SAMPLING METHOD USED: Vacuum operated composite liquid waste sampler (VACSAM), a modified caliwasa sampler
4. AMOUNT OF SAMPLE OBTAINED: 1 quart
5. TYPE OF CONTAINER INTO WHICH SAMPLE WAS PLACED: Glass bottle
6. THE SAMPLING EQUIPMENT USED, AND THE CONTAINER INTO WHICH THE SAMPLE WAS PLACED, WERE THEMSELVES UNCONTAMINATED BEFORE USE.
7. AT THE TIME OF SAMPLING I AFFIXED A LABEL TO THE CONTAINER IN THE FOLLOWING FORM WITH THE FOLLOWING INFORMATION (FILL IN THIS PORTION, INCLUDING YOUR SIGNATURE, JUST AS IT APPEARS ON THE LABEL YOU PREPARED):

GENERATOR: Salt River Project
WASTE NAME: Paint and Solvent Waste
SAMPLE HOUR/DATE: 1310, 10/10/85
PROFILE SHEET CODE: F26961
SAMPLER SIGNATURE: Roderic Stipe

WITNESS VERIFICATION: I WAS PERSONALLY PRESENT DURING THE SAMPLING DESCRIBED; I DIRECTED THE WASTE SOURCE TO BE SAMPLED; AND I VERIFY THE INFORMATION ABOVE NOTED.

WITNESS: Dennis Green

SIGNATURE: Dennis Green

TITLE: Project Manager

EMPLOYER: Western Technologies Inc.

DATE: 1/07/85

SAMPLER NAME: Roderic Stipe

SIGNATURE: Roderic Stipe

TITLE: Project Manager

EMPLOYER: Western Technologies Inc.

DATE: 1/07/85

FORM WMI-51 (Rev. 12/84)
© 1980 WASTE MANAGEMENT, INC.

Waste Management, Inc.
GENERATOR'S WASTE MATERIAL PROFILE SHEET

WASTE PROFILE SHEET CODE
PHX
TSDR F26959

A. GENERAL INFORMATION Drum Nos. N206, 235

GENERATOR NAME: Salt River Project
TRANSPORTER: Chemical Waste Mgmt., Inc.
FACILITY ADDRESS: Navajo Generating Station
State Hwy 98, 5 mi. east of Page, Arizona
Page, Arizona
TRANSPORTER PHONE: (602)243-6154
GENERATOR USEPA I.D. A Z D 0 7 4 4 5 2 4 2 6
GENERATOR STATE I.D. N/A
TECHNICAL CONTACT: Art Oros
TITLE: Supr., Matls. Reclam
PHONE: (602)236-2244
NAME OF WASTE: Caustic Cleaning Waste
PROCESS GENERATING WASTE: Part cleaning and paint stripping

B. PHYSICAL CHARACTERISTICS OF WASTE

COLOR: Brown

ODOR: [X] NONE [ ] MILD [ ] STRONG
DESCRIBE

PHYSICAL STATE @ 70°F: [ ] SOLID [ ] SEMI-SOLID [X] LIQUID [ ] POWDER

LAYERS: [ ] MULTILAYERED [ ] BI-LAYERED [X] SINGLE PHASED

FREE LIQUIDS: [X] YES [ ] NO
VOLUME 90-100%

pH: [ ] < 2 [ ] 7.1-10 [ ] N/A [ ] 2-4 [ ] 10.1-12.5 [ ] 4.1-6.9 [X] > 12.5 [ ] 7 [ ] EXACT

SPECIFIC GRAVITY: [ ] < .8 [X] 1.3-1.4 [ ] .8-1.0 [ ] 1.5-1.7 [ ] 1.1-1.2 [ ] > 1.7 [ ] EXACT

FLASH POINT: [ ] < 70°F [X] > 200°F [X] CLOSED CUP [ ] 70°F-100°F [ ] NO FLASH [ ] OPEN CUP [ ] 101°F-139°F [ ] EXACT [ ] 140°F-200°F

C. CHEMICAL COMPOSITION (TOTALS MUST ADD TO 100%)

Water	50-70%
Caustic as sodium hydroxide	10-20%
Paint, rust and soil	20-40%
	%
	%
	%
	%
	%
	%
	%

D. METALS [X] TOTAL (PPM) [ ] EPA EXTRACTION PROCEDURE (mg/L)

ARSENIC (As)	<5	SELENIUM (Se)	<0.5
BARIUM (Ba)	<1	SILVER (Ag)	<1
CADMIUM (Cd)	<1	COPPER (Cu)	None
CHROMIUM (Cr)	<1	NICKEL (Ni)	None
MERCURY (Hg)	<0.1	ZINC (Zn)	None
LEAD (Pb)	<5	THALLIUM (Tl)	None
CHROMIUM-HEX (Cr + 6)	<1		

E. OTHER COMPONENTS - TOTAL (PPM)

CYANIDES	None	PCB'S	None
SULFIDES	None	PHENOLICS	None

F. SHIPPING INFORMATION

D.O.T. HAZARDOUS MATERIAL? [X] YES [ ] NO

PROPER SHIPPING NAME: Waste Alkaline Liquid, n.o.s.
HAZARD CLASS: Corrosive Material I.D. NO. NA1719 R.Q. 1 lb

METHOD OF SHIPMENT: [ ] BULK LIQUID [ ] BULK SOLID [X] DRUM (TYPE/SIZE) 17E, 55 gal.

ANTICIPATED VOLUME: GALS. CUBIC YARDS OTHER 1-2 drums

PER: [ ] ONE TIME [ ] WEEK [ ] MONTH [ ] QUARTER [X] YEAR [ ]

G. HAZARDOUS CHARACTERISTICS

REACTIVITY: [X] NONE [ ] PYROPHORIC [ ] SHOCK SENSITIVE [ ] EXPLOSIVE [ ] WATER REACTIVE [ ] OTHER

OTHER HAZARDOUS CHARACTERISTICS:
[X] NONE [ ] RADIOACTIVE [ ] ETIOLOGICAL [ ] PESTICIDE MANUFACTURING WASTE [ ] OTHER

USEPA HAZARDOUS WASTE? [X] YES [ ] NO
USEPA HAZARDOUS CODE(S) D002

STATE HAZARDOUS WASTE? [X] YES [ ] NO
STATE CODE(S) D002

H. SPECIAL HANDLING INFORMATION

Personal Protective Equipment: Rubber or vinyl gloves and apron; safety goggles or face shield

[ ] ADDITIONAL PAGE(S) ATTACHED

I HEREBY CERTIFY THAT ALL INFORMATION SUBMITTED IN THIS AND ALL ATTACHED DOCUMENTS IS COMPLETE AND ACCURATE AND THAT ALL KNOWN OR SUSPECTED HAZARDS HAVE BEEN DISCLOSED.

AUTHORIZED SIGNATURE TITLE DATE

WASTE PROFILE SHEET CODE

CERTIFICATION OF REPRESENTATIVE SAMPLE

GENERAL DIRECTIONS: IN ORDER TO DETERMINE WHETHER WE CAN ACCEPT THE SPECIAL WASTE DESCRIBED IN THE ABOVE NUMBERED PROFILE SHEET, WE MUST OBTAIN A REPRESENTATIVE SAMPLE OF THE WASTE. WE WILL ANALYZE THE SAMPLE TO VERIFY THE INFORMATION YOU HAVE PROVIDED US, SO IT IS PARTICULARLY IMPORTANT THAT THE SAMPLE BE TRULY REPRESENTATIVE. IN MOST CIRCUMSTANCES YOU WILL BE OBTAINING THE SAMPLE. HOWEVER, IN THOSE CASES IN WHICH WE OBTAIN THE SAMPLE, WE MUST ASK THAT ONE OF YOUR EMPLOYEES BE PRESENT TO DIRECT THE PARTICULAR SOURCE TO BE SAMPLED AND TO WITNESS THE SAMPLING. IN SUCH CASE, YOUR EMPLOYEE MUST SIGN THIS CERTIFICATION AS A WITNESS.

THIS CERTIFICATION MUST BE RETURNED, WITH THE REPRESENTATIVE WASTE SAMPLE, TO:

CHEMICAL WASTE MANAGEMENT, INC.
P.O. BOX 6741
PHOENIX, ARIZONA 85005

THE UNDERSIGNED CERTIFIES THAT HE/SHE OBTAINED A REPRESENTATIVE SAMPLE OF THE WASTE MATERIAL DESCRIBED IN THE "GENERATOR'S WASTE MATERIAL PROFILE SHEET" ABOVE REFERENCED, AND THAT THE FOLLOWING REPRESENTATIONS ARE TRUE AND CORRECT:

1. HOUR AND DATE OF SAMPLING: 0928, 10/10/85
2. SOURCE FROM WHICH SAMPLE TAKEN: 55 gal drum
3. EQUIPMENT AND SAMPLING METHOD USED: Vacuum operated composite liquid waste sampler (VACSAM), a modified caliwasa sampler
4. AMOUNT OF SAMPLE OBTAINED: 1 quart
5. TYPE OF CONTAINER INTO WHICH SAMPLE WAS PLACED: Glass bottle
6. THE SAMPLING EQUIPMENT USED, AND THE CONTAINER INTO WHICH THE SAMPLE WAS PLACED, WERE THEMSELVES UNCONTAMINATED BEFORE USE.
7. AT THE TIME OF SAMPLING I AFFIXED A LABEL TO THE CONTAINER IN THE FOLLOWING FORM WITH THE FOLLOWING INFORMATION (FILL IN THIS PORTION, INCLUDING YOUR SIGNATURE, JUST AS IT APPEARS ON THE LABEL YOU PREPARED):

GENERATOR: Salt River Project
WASTE NAME: Caustic Cleaning Waste
SAMPLE HOUR/DATE: 0928, 10/10/85
PROFILE SHEET CODE: F26959
SAMPLER SIGNATURE: Roderic Stipe

WITNESS VERIFICATION: I WAS PERSONALLY PRESENT DURING THE SAMPLING DESCRIBED; I DIRECTED THE WASTE SOURCE TO BE SAMPLED; AND I VERIFY THE INFORMATION ABOVE NOTED.

WITNESS: Dennis Green

SIGNATURE: Dennis Green

TITLE: Project Manager

EMPLOYER: Western Technologies Inc.

DATE: 1/07/85

SAMPLER NAME: Roderic Stipe

SIGNATURE: Roderic Stipe

TITLE: Project Manager

EMPLOYER: Western Technologies Inc.

DATE: 1/07/86

FORM WMI-51 (Rev. 12/84)
© 1980 WASTE MANAGEMENT, INC.

Waste Management, Inc.
GENERATOR WASTE MATERIAL PROFILE SHEET

WASTE PROFILE SHEET CODE
PHX
TSDR F26956

NERAL INFORMATION

TOR NAME: Salt River Project
ADDRESS: Navajo Generating Station
State Hwy 98, 5 mi east of Page, Arizona
Page, Arizona
CAL CONTACT: Art Oros TITLE: Supr., Matls. Reclam
OF WASTE: Hydrazine
SS GENERATING WASTE: Facility Clean-up (Off-Specification Product)

TRANSPORTER: Chemical Waste Mgmt., Inc.
TRANSPORTER PHONE: (602) 243-6154
GENERATOR USEPA I.D. AZD074452426
GENERATOR STATE I.D. N/A
PHONE: (602) 236-2244

YSICAL CHARACTERISTICS OF WASTE

ODOR ☐ NONE ☐ MILD ☐ STRONG
DESCRIBE

PHYSICAL STATE @ 70°F: ☐ SOLID ☐ SEMI-SOLID ☐ LIQUID ☐ POWDER

LAYERS: ☐ MULTILAYERED ☐ BILAYERED ☐ SINGLE PHASED

FREE LIQUIDS: ☐ YES ☐ NO
VOLUME %

< 2 ☐ 7.1-10 ☐ N/A
2-4 ☐ 10.1-12.5
4.1-6.9 ☐ > 12.5
☐ EXACT

SPECIFIC GRAVITY: ☐ < .8 ☐ 1.3-1.4 ☐ .8-1.0 ☐ 1.5-1.7 ☐ 1.1-1.2 ☐ > 1.7 ☐ EXACT

FLASH POINT: ☐ < 70°F ☐ > 200°F ☐ CLOSED CUP ☐ 70°F-100°F ☐ NO FLASH ☐ OPEN CUP ☐ 101°F-139°F ☐ EXACT ☐ 140°F-200°F

HEMICAL COMPOSITION (TOTALS MUST ADD TO 100%)

5% aqueous hydrazine solution	100 %
See attached material safety data sheet (MSDS)	%
	%
	%
	%
	%
	%
	%

METALS ☐ TOTAL (PPM) ☐ EPA EXTRACTION PROCEDURE (mg/L)

ARSENIC (As)		SELENIUM (Se)	
BARIUM (Ba)		SILVER (Ag)	
CADMIUM (Cd)		COPPER (Cu)	
CHROMIUM (Cr)		NICKEL (Ni)	
MERCURY (Hg)		ZINC (Zn)	
LEAD (Pb)		THALLIUM (Tl)	
CHROMIUM-HEX (Cr + 6)			

E OTHER COMPONENTS - TOTAL (PPM)

CYANIDES		PCB'S	
SULFIDES		PHENOLICS	

HIPPING INFORMATION

HAZARDOUS MATERIAL? ☒ YES ☐ NO
PER SHIPPING NAME: Waste Hydrazine, aqueous solution
ARD CLASS: Corrosive Material I.D. NO. UN2030 R.Q. 1 lb
HOD OF SHIPMENT: ☐ BULK LIQUID ☐ BULK SOLID ☒ DRUM (TYPE/SIZE) 30 gal
ICIPATED VOLUME: GALS. CUBIC YARDS OTHER 2 drums
3 drums initially
PER: ☐ ONE TIME ☐ WEEK ☐ MONTH ☐ QUARTER ☒ YEAR ☐

G HAZARDOUS CHARACTERISTICS

REACTIVITY: ☐ NONE ☐ PYROPHORIC ☐ SHOCK SENSITIVE ☐ EXPLOSIVE ☐ WATER REACTIVE ☐ OTHER

OTHER HAZARDOUS CHARACTERISTICS:
☐ NONE ☐ RADIOACTIVE ☐ ETIOLOGICAL
☐ PESTICIDE MANUFACTURING WASTE ☐ OTHER
USEPA HAZARDOUS WASTE? ☐ YES ☐ NO
USEPA HAZARDOUS CODE(S)
STATE HAZARDOUS WASTE? ☐ YES ☐ NO
STATE CODE(S)

SPECIAL HANDLING INFORMATION

☐ ADDITIONAL PAGE(S) ATTACHED

EREBY CERTIFY THAT ALL INFORMATION SUBMITTED IN THIS AND ALL ATTACHED DOCUMENTS IS COMPLETE AND ACCURATE, AND THAT ALL KNOWN OR SPECTED HAZARDS HAVE BEEN DISCLOSED.

THORIZED SIGNATURE TITLE DATE

CHEMICAL BULLETIN: Hydrazine (35%)

PERSONAL PROTECTIVE METHODS:

Rubber gloves are required.

Approved chemical safety goggles are required.

Hydrazine should be used in a closed system.

Use in a well-ventilated area.

For spills or leaks use self-contained breathing apparatus.

FIRE CONTROL:

Extinguish with CO_2, dry chemical, water fog, or alcohol foam. Use large quantities of water to flood, dilute and disperse vapor.

STORAGE REQUIREMENTS:

Store in a cool, dry area.

Keep containers tightly closed when not in use.

DISPOSAL METHODS:

Hydrazine waste is hazardous and must be transported to an authorized hazardous waste disposal site. Contact Material Reclamation for transporting information.

FIRST AID:

Eye and Skin: Immediately flush with water for at least 15 minutes. Seek medical attention.

Ingestion: Give large amounts of water. Do not induce vomiting. Call for medical assistance.

Inhalation: Remove to fresh air. If not breathing, give artificial respiration, oxygen. Call for medical assistance.

ITEM V-1-2-3
4

Salt River Project
Loss Control Division

CHEMICAL BULLETIN #69

Hydrazine (35%)

TRADENAME:
NALCO 19-H

DESCRIPTION:
Colorless liquid with an ammonia odor.

USES:
Oxygen scavenger in boiler feedwater systems.

POTENTIAL HEALTH EFFECTS:
Contact may cause eye and skin burns and result in hypersensitivity in the skin. Vapors may cause lung and mucous membrane injury. May be absorbed through the skin in toxic amounts.

Hydrazine is a suspected carcinogen. Chronic exposure may result in systemic damage to the liver and kidneys.

FIRE/EXPLOSION HAZARDS:
This product is a 35% hydrazine solution in water. Therefore, characteristics are much reduced from pure anhydrous hydrazine.

Flash point 230 degrees F.

Rags, wood and other porous material subject to spontaneous heating if contaminated with this product.

REACTIVITY:
May corrode cork, rubber and other organic materials. It may decompose when heated to form highly toxic nitrogen compounds. Oxidizing materials may also decompose hydrazine.

(FOR PROTECTIVE MEASURES, SEE REVERSE SIDE)

CHEMICAL BULLETIN: Hydrazine (35%)

PERSONAL PROTECTIVE METHODS:

Rubber gloves are required.

Approved chemical safety goggles are required.

Hydrazine should be used in a closed system.

Use in a well-ventilated area.

For spills or leaks use self-contained breathing apparatus.

FIRE CONTROL:

Extinguish with CO_2, dry chemical, water fog, or alcohol foam. Use large quantities of water to flood, dilute and disperse vapor.

STORAGE REQUIREMENTS:

Store in a cool, dry area.

Keep containers tightly closed when not in use.

DISPOSAL METHODS:

Hydrazine waste is hazardous and must be transported to an authorized hazardous waste disposal site. Contact Material Reclamation for transporting information.

FIRST AID:

Eye and Skin: Immediately flush with water for at least 15 minutes. Seek medical attention.

Ingestion: Give large amounts of water. Do not induce vomiting. Call for medical assistance.

Inhalation: Remove to fresh air. If not breathing, give artificial respiration, oxygen. Call for medical assistance.

Waste Management, Inc.
GENERATOR'S WASTE MATERIAL PROFILE SHEET

WASTE PROFILE SHEET CODE: PHX
TSDR: F26957

RAL INFORMATION Drum No. N234

R NAME: Salt River Project
TRANSPORTER: Chemical Waste Mgmt., Inc.
DDRESS: Navajo Generating Station
State Hwy 98, 5 mi. east of Page, Arizona
Page, Arizona
TRANSPORTER PHONE: (602) 243-6154
GENERATOR USEPA I.D.: A Z D 0 7 4 4 5 2 4 2 6
GENERATOR STATE I.D.: N/A
L CONTACT: Art Oros
TITLE: Supr., Matls. Reclam.
PHONE: (602) 236-2244
WASTE: Omala Oil Sludge
GENERATING WASTE: Facility Clean-up

CAL CHARACTERISTICS OF WASTE

ack

ODOR: ☐ NONE ☒ MILD ☐ STRONG
DESCRIBE: Tar

PHYSICAL STATE @ 70°F: ☐ SOLID ☒ SEMI-SOLID ☐ LIQUID ☐ POWDER

LAYERS: ☐ MULTILAYERED ☐ BI-LAYERED ☒ SINGLE PHASED

FREE LIQUIDS: ☐ YES ☒ NO
VOLUME: %

·6.9: ☐ 7.1-10 ☐ N/A ☐ 10.1-12.5 ☐ > 12.5 ☒ EXACT 3.5

SPECIFIC GRAVITY: ☐ < .8 ☐ .8-1.0 ☐ 1.1-1.2 ☐ EXACT ☐ 1.3-1.4 ☒ 1.5-1.7 ☒ > 1.7

FLASH POINT: ☐ < 70°F ☐ 70°F-100°F ☐ 101°F-139°F ☐ 140°F-200°F ☒ > 200°F ☐ NO FLASH ☐ EXACT ☒ CLOSED CUP ☐ OPEN CUP

ICAL COMPOSITION (TOTALS MUST ADD TO 100%)

l and oil sludge	100 %
	%
	%
	%
	%
	%
	%
	%
	%
	%

D METALS ☒ TOTAL (PPM) ☐ EPA EXTRACTION PROCEDURE (mg/L)

ARSENIC (As)	0-10	SELENIUM (Se)	<2
BARIUM (Ba)	<2	SILVER (Ag)	<5
CADMIUM (Cd)	<2	COPPER (Cu)	None
CHROMIUM (Cr)	0-10	NICKEL (Ni)	None
MERCURY (Hg)	<0.1	ZINC (Zn)	None
LEAD (Pb)	0-10	THALLIUM (Tl)	None
CHROMIUM-HEX (Cr + 6)	N/A		

E OTHER COMPONENTS - TOTAL (PPM)

CYANIDES	None	PCB'S	<5
SULFIDES	None	PHENOLICS	None

NG INFORMATION

ZARDOUS MATERIAL? ☒ YES ☐ NO
HIPPING NAME: Hazardous Waste Solid, n.o.s. (Oil Sludge)
CLASS: ORM-E I.D. NO.: NA9189 R.Q.: 1 lb
OF SHIPMENT: ☐ BULK L QUID ☐ BULK SOLID
☒ DRUM (TYPE/SIZE): 17E/H, 55 gal
TED VOLUME: GALS. CUBIC YARDS
OTHER: 1 drum
PER: ☐ ONE TIME ☐ WEEK ☐ MONTH ☐ QUARTER ☒ YEAR ☐

G HAZARDOUS CHARACTERISTICS

REACTIVITY: ☒ NONE ☐ PYROPHORIC ☐ SHOCK SENSITIVE ☐ EXPLOSIVE ☐ WATER REACTIVE ☐ OTHER

OTHER HAZARDOUS CHARACTERISTICS: ☒ NONE ☐ RADIOACTIVE ☐ ETIOLOGICAL ☐ PESTICIDE MANUFACTURING WASTE ☐ OTHER

USEPA HAZARDOUS WASTE? ☒ YES ☐ NO
USEPA HAZARDOUS CODE(S): D004
STATE HAZARDOUS WASTE? ☒ YES ☐ NO
STATE CODE(S): D004

CIAL HANDLING INFORMATION

rsonal Protective Equipment: Rubber gloves and protective clothing

☐ ADDITIONAL PAGE(S) ATTACHED

Y CERTIFY THAT ALL INFORMATION SUBMITTED IN THIS AND ALL ATTACHED DOCUMENTS IS COMPLETE AND ACCURATE, AND THAT ALL KNOWN OR TED HAZARDS HAVE BEEN DISCLOSED.

ZED SIGNATURE | TITLE | DATE

PHX	26957

WASTE PROFILE SHEET CODE

ERTIFICATION OF REPRESENTATIVE SAMPLE

ENERAL DIRECTIONS: IN ORDER TO DETERMINE WHETHER WE CAN ACCEPT THE SPECIAL WASTE DESCRIBED THE ABOVE NUMBERED PROFILE SHEET, WE MUST OBTAIN A REPRESENTATIVE SAMPLE OF THE WASTE. WE ILL ANALYZE THE SAMPLE TO VERIFY THE INFORMATION YOU HAVE PROVIDED US, SO IT IS PARTICULARLY PORTANT THAT THE SAMPLE BE TRULY REPRESENTATIVE. IN MOST CIRCUMSTANCES YOU WILL BE OBTAINING E SAMPLE. HOWEVER, IN THOSE CASES IN WHICH WE OBTAIN THE SAMPLE, WE MUST ASK THAT ONE OF UR EMPLOYEES BE PRESENT TO DIRECT THE PARTICULAR SOURCE TO BE SAMPLED AND TO WITNESS THE MPLING. IN SUCH CASE, YOUR EMPLOYEE MUST SIGN THIS CERTIFICATION AS A WITNESS.

IS CERTIFICATION MUST BE RETURNED, WITH THE REPRESENTATIVE WASTE SAMPLE, TO:

CHEMICAL WASTE MANAGEMENT, INC.
P.O. BOX 6741
PHOENIX, ARIZONA 85005

E UNDERSIGNED CERTIFIES THAT HE/SHE OBTAINED A REPRESENTATIVE SAMPLE OF THE WASTE ATERIAL DESCRIBED IN THE "GENERATOR'S WASTE MATERIAL PROFILE SHEET" ABOVE REFERENCED, AND AT THE FOLLOWING REPRESENTATIONS ARE TRUE AND CORRECT:

1. HOUR AND DATE OF SAMPLING: 1325, 10/10/85
2. SOURCE FROM WHICH SAMPLE TAKEN: 55 gal drum
3. EQUIPMENT AND SAMPLING METHOD USED: Vacuum operated composite liquid waste sampler (VACSAM), a modified coliwasa sampler
4. AMOUNT OF SAMPLE OBTAINED: 1 quart
5. TYPE OF CONTAINER INTO WHICH SAMPLE WAS PLACED: Glass bottle
6. THE SAMPLING EQUIPMENT USED, AND THE CONTAINER INTO WHICH THE SAMPLE WAS PLACED, WERE THEMSELVES UNCONTAMINATED BEFORE USE.
7. AT THE TIME OF SAMPLING I AFFIXED A LABEL TO THE CONTAINER IN THE FOLLOWING FORM WITH THE FOLLOWING INFORMATION (FILL IN THIS PORTION, INCLUDING YOUR SIGNATURE, JUST AS IT APPEARS ON THE LABEL YOU PREPARED):

GENERATOR: Salt River Project
WASTE NAME: Omala Oil Sludge
SAMPLE HOUR/DATE: 1325, 10/10/85
PROFILE SHEET CODE: F26957
SAMPLER SIGNATURE: Roderic Stipe

ITNESS VERIFICATION: I WAS PERSONALLY PRESNT DURING THE SAMPLING DESCRIBED; I DIRECTED E WASTE SOURCE TO BE SAMPLED; AND I VERIFY E INFORMATION ABOVE NOTED.

ITNESS: Dennis Green

GNATURE: Dennis Green

ITLE: Project Manager

MPLOYER: Western Technologies Inc.

ATE: 1/07/86

SAMPLER NAME: Roderic Stipe

SIGNATURE: Roderic Stipe

TITLE: Project Manager

EMPLOYER: Western Technologies Inc.

DATE: 1/07/86

1980 WASTE MANAGEMENT, INC.

WASTE PROFILE SHEET CODE

PHX TSDR F26960

AL INFORMATION Drum Nos. N200,202,203,205,207,208,209,211,212

NAME: Salt River Project

TRANSPORTER: Chemical Waste Mgmt., Inc.

DRESS: Navajo Generating Station
State Hwy 98, 5 mi. east of Page, Arizona
Page, Arizona

TRANSPORTER PHONE: (602) 243-6154

GENERATOR USEPA I.D. A Z D 0 7 4 4 5 2 4 2 6

GENERATOR STATE I.D. N/A

CONTACT: Art Oros TITLE: Supr. Matls. Reclam. PHONE: (602) 236-2244

ASTE: Paint Related Wastes

NERATING WASTE: Industrial painting and facility clean-up

AL CHARACTERISTICS OF WASTE

with paints

ODOR ☐ NONE ☒ MILD ☒ STRONG
DESCRIBE Paint

PHYSICAL STATE @ 70°F ☐ SOLID ☒ SEMI-SOLID ☒ LIQUID ☐ POWDER

LAYERS ☐ MULTILAYERED ☒ BI-LAYERED ☐ SINGLE PHASED

FREE LIQUIDS ☒ YES ☐ NO
VOLUME 5-100 %

☐ 7.1-10 ☐ N/A
☐ 10.1-12.5
.9 ☐ > 12.5
☐ EXACT

SPECIFIC GRAVITY ☐ < .8 ☒ 1.3-1.4 ☐ .8-1.0 ☐ 1.5-1.7 ☒ 1.1-1.2 ☐ > 1.7 ☐ EXACT

FLASH POINT ☐ < 70°F ☒ > 200°F ☒ CLOSED CUP ☐ 70°F-100°F ☐ NO FLASH ☐ OPEN CUP ☐ 101°F-139°F ☐ EXACT ☐ 140°F-200°F

AL COMPOSITION (TOTALS MUST ADD TO 100%)

: and enamel paints and resins	5-90 %
mineral & petroleum)	0-10 %
e	0-10 %
	5-90 %
	%
	%
	%
	%
	%
	%

D METALS ☒ TOTAL (PPM) ☐ EPA EXTRACTION PROCEDURE (mg/L)

ARSENIC (As)	< 5	SELENIUM (Se)	< 0.5
BARIUM (Ba)	< 1	SILVER (Ag)	< 1
CADMIUM (Cd)	< 1	COPPER (Cu)	None
CHROMIUM (Cr)	< 1	NICKEL (Ni)	None
MERCURY (Hg)	< 0.1	ZINC (Zn)	None
LEAD (Pb)	< 5	THALLIUM (Tl)	None
CHROMIUM-HEX (Cr + 6)	N/A		

E OTHER COMPONENTS - TOTAL (PPM)

CYANIDES	None	PCB'S	None
SULFIDES	None	PHENOLICS	None

G INFORMATION

RDOUS MATERIAL? ☐ YES ☒ NO

IPPING NAME Paint Related Wastes

ASS N/A I.D. NO. N/A R.Q. N/A

E SHIPMENT: ☐ BULK LIQUID ☐ BULK SOLID
☒ DRUM (TYPE/SIZE) 17E, 55 gal

D VOLUME: GALS. CUBIC YARDS
OTHER 5 drums

PER: ☐ ONE TIME ☐ WEEK ☐ MONTH
☐ QUARTER ☒ YEAR ☐

G HAZARDOUS CHARACTERISTICS

REACTIVITY: ☒ NONE ☐ PYROPHORIC ☐ SHOCK SENSITIVE
☐ EXPLOSIVE ☐ WATER REACTIVE ☐ OTHER

OTHER HAZARDOUS CHARACTERISTICS:
☒ NONE ☐ RADIOACTIVE ☐ ETIOLOGICAL
☐ PESTICIDE MANUFACTURING WASTE ☐ OTHER

USEPA HAZARDOUS WASTE? ☐ YES ☒ NO
USEPA HAZARDOUS CODE(S)

STATE HAZARDOUS WASTE? ☐ YES
STATE CODE(S)

AL HANDLING INFORMATION

sonal Protective Equipment: Protective gloves; goggles or face.

PAGE(S) ATTACHED

CERTIFY THAT ALL INFORMATION SUBMITTED IN THIS AND ALL ATTACHED DOCUMENTS IS COMPLETE AND ACCURATE
D HAZARDS HAVE BEEN DISCLOSED.

ED SIGNATURE TITLE DATE

PHX F26960

WA' = PROFILE SHEET CODE

CERTIFICATION OF REPRESENTATIVE SAMPLE

GENERAL DIRECTIONS: IN ORDER TO DETERMINE WHETHER WE CAN ACCEPT THE SPECIAL WASTE DESCRIBED N THE ABOVE NUMBERED PROFILE SHEET, WE MUST OBTAIN A REPRESENTATIVE SAMPLE OF THE WASTE. WE WILL ANALYZE THE SAMPLE TO VERIFY THE INFORMATION YOU HAVE PROVIDED US, SO IT IS PARTICULARLY MPORTANT THAT THE SAMPLE BE TRULY REPRESENTATIVE. IN MOST CIRCUMSTANCES YOU WILL BE OBTAINING THE SAMPLE. HOWEVER, IN THOSE CASES IN WHICH WE OBTAIN THE SAMPLE, WE MUST ASK THAT ONE OF YOUR EMPLOYEES BE PRESENT TO DIRECT THE PARTICULAR SOURCE TO BE SAMPLED AND TO WITNESS THE SAMPLING. IN SUCH CASE, YOUR EMPLOYEE MUST SIGN THIS CERTIFICATION AS A WITNESS.

THIS CERTIFICATION MUST BE RETURNED, WITH THE REPRESENTATIVE WASTE SAMPLE, TO:

CHEMICAL WASTE MANAGEMENT, INC.
P.O. BOX 6741
PHOENIX, ARIZONA 85005

THE UNDERSIGNED CERTIFIES THAT HE/SHE OBTAINED A REPRESENTATIVE SAMPLE OF THE WASTE MATERIAL DESCRIBED IN THE "GENERATOR'S WASTE MATERIAL PROFILE SHEET" ABOVE REFERENCED, AND THAT THE FOLLOWING REPRESENTATIONS ARE TRUE AND CORRECT:

1. HOUR AND DATE OF SAMPLING: 0903, 10/10/85
2. SOURCE FROM WHICH SAMPLE TAKEN: 55 gal drum
3. EQUIPMENT AND SAMPLING METHOD USED: Vacuum operated composite liquid waste samples (VACSAM), a modified caliwasa sampler
4. AMOUNT OF SAMPLE OBTAINED: 1 quart
5. TYPE OF CONTAINER INTO WHICH SAMPLE WAS PLACED: Glass bottle
6. THE SAMPLING EQUIPMENT USED, AND THE CONTAINER INTO WHICH THE SAMPLE WAS PLACED, WERE THEMSELVES UNCONTAMINATED BEFORE USE.
7. AT THE TIME OF SAMPLING I AFFIXED A LABEL TO THE CONTAINER IN THE FOLLOWING FORM WITH THE FOLLOWING INFORMATION (FILL IN THIS PORTION, INCLUDING YOUR SIGNATURE, JUST AS IT APPEARS ON THE LABEL YOU PREPARED):

GENERATOR: Salt River Project
WASTE NAME: Paint Related Wastes
SAMPLE HOUR/DATE: 0903, 10/10/85
PROFILE SHEET CODE: F26960
SAMPLER SIGNATURE: Roderic Stipe

WITNESS VERIFICATION: I WAS PERSONALLY PRESENT DURING THE SAMPLING DESCRIBED; I DIRECTED THE WASTE SOURCE TO BE SAMPLED; AND I VERIFY THE INFORMATION ABOVE NOTED.

WITNESS: Dennis Green

SIGNATURE: Dennis Green

TITLE: Project Manager

EMPLOYER: Western Technologies Inc.

DATE: 1/07/85

SAMPLER NAME: Roderic Stipe

SIGNATURE: Roderic Stipe

TITLE: Project Manager

EMPLOYER: Western Technologies

DATE: 1/07/86

L PAGE(S) ATTACHED

QR

FORM WMI-51 (Rev. 12/84)

© 1980 WASTE MANAGEMENT, INC.

WASTE PROFILE SHEET CODE

PHX TSDR F26958

ENERAL INFORMATION Drum No. N204

ATOR NAME: Salt River Project

TRANSPORTER: Chemical Waste Mgmt., Inc.

TY ADDRESS: Navajo Generating Station
State Hwy 98, 5 mi. east of Page, Arizona
Page, Arizona

TRANSPORTER PHONE: (602) 243-6154

GENERATOR USEPA I.D. AZD074452426

GENERATOR STATE I.D. N/A

ICAL CONTACT: Art Oros

TITLE: Supr., Matls. Reclam.

PHONE: (602) 236-2244

OF WASTE: Grease

ESS GENERATING WASTE: Facility clean-up (lubricating grease)

HYSICAL CHARACTERISTICS OF WASTE

R: Brown

ODOR: ☐ NONE ☒ MILD ☐ STRONG

DESCRIBE: grease

PHYSICAL STATE @ 70°F: ☒ SOLID ☒ SEMI-SOLID ☐ LIQUID ☐ POWDER

LAYERS: ☐ MULTILAYERED ☐ BI-LAYERED ☒ SINGLE PHASED

FREE LIQUIDS: ☒ YES ☐ NO

VOLUME: 0-10 %

☐ < 2 ☐ 7.1-10 ☒ N/A
☐ 2-4 ☐ 10.1-12.5
☐ 4.1-6.9 ☐ > 12.5
☐ 7 ☐ EXACT

SPECIFIC GRAVITY: ☐ < .8 ☒ 1.3-1.4 ☐ .8-1.0 ☐ 1.5-1.7 ☐ 1.1-1.2 ☐ > 1.7 ☐ EXACT

FLASH POINT: ☐ < 70°F ☒ > 200°F ☒ CLOSED CUP ☐ 70°F-100°F ☐ NO FLASH ☐ OPEN CUP ☐ 101°F-139°F ☐ EXACT ☐ 140°F-200°F

HEMICAL COMPOSITION (TOTALS MUST ADD TO 100%)

Lubricating grease	100 %

D METALS ☒ TOTAL (PPM) ☐ EPA EXTRACTION PROCEDURE (mg/L)

ARSENIC (As)	< 5	SELENIUM (Se)	< 0.5
BARIUM (Ba)	< 1	SILVER (Ag)	< 2
CADMIUM (Cd)	< 1	COPPER (Cu)	None
CHROMIUM (Cr)	< 1	NICKEL (Ni)	None
MERCURY (Hg)	< 0.1	ZINC (Zn)	None
LEAD (Pb)	< 5	THALLIUM (Tl)	
CHROMIUM-HEX (Cr + 6)	N/A		

E OTHER COMPONENTS - TOTAL (PPM)

CYANIDES	None	PCB'S	None
SULFIDES	None	PHENOLICS	None

HIPPING INFORMATION

HAZARDOUS MATERIAL? ☐ YES ☒ NO

ER SHIPPING NAME: Waste Grease

ARD CLASS: N/A I.D. NO.: N/A R.Q.: N/A

HOD OF SHIPMENT: ☐ BULK LIQUID ☐ BULK SOLID ☒ DRUM (TYPE/SIZE) 17 E/H, 55 gal.

CIPATED VOLUME: GALS. CUBIC YARDS OTHER 1 drum

PER: ☐ ONE TIME ☐ WEEK ☐ MONTH ☐ QUARTER ☒ YEAR ☐

G HAZARDOUS CHARACTERISTICS

REACTIVITY: ☒ NONE ☐ PYROPHORIC ☐ SHOCK SENSITIVE ☐ EXPLOSIVE ☐ WATER REACTIVE ☐ OTHER

OTHER HAZARDOUS CHARACTERISTICS: ☒ NONE ☐ RADIOACTIVE ☐ ETIOLOGICAL ☐ PESTICIDE MANUFACTURING WASTE ☐ OTHER

USEPA HAZARDOUS WASTE? ☐ YES ☒ NO

USEPA HAZARDOUS CODE(S)

STATE HAZARDOUS WASTE? ☐ YES ☒ NO

STATE CODE(S)

SPECIAL HANDLING INFORMATION

☐ ADDITIONAL PAGE(S) ATTACHED

EREBY CERTIFY THAT ALL INFORMATION SUBMITTED IN THIS AND ALL ATTACHED DOCUMENTS IS COMPLETE AND ACCURATE, AND THAT ALL KNOWN OR SPECTED HAZARDS HAVE BEEN DISCLOSED.

HORIZED SIGNATURE TITLE DATE

WASTE PROFILE SHEET CODE

CERTIFICATION OF REPRESENTATIVE SAMPLE

GENERAL DIRECTIONS: IN ORDER TO DETERMINE WHETHER WE CAN ACCEPT THE SPECIAL WASTE DESCRIBED IN THE ABOVE NUMBERED PROFILE SHEET, WE MUST OBTAIN A REPRESENTATIVE SAMPLE OF THE WASTE. WE WILL ANALYZE THE SAMPLE TO VERIFY THE INFORMATION YOU HAVE PROVIDED US, SO IT IS PARTICULARLY IMPORTANT THAT THE SAMPLE BE TRULY REPRESENTATIVE. IN MOST CIRCUMSTANCES YOU WILL BE OBTAINING THE SAMPLE. HOWEVER, IN THOSE CASES IN WHICH WE OBTAIN THE SAMPLE, WE MUST ASK THAT ONE OF YOUR EMPLOYEES BE PRESENT TO DIRECT THE PARTICULAR SOURCE TO BE SAMPLED AND TO WITNESS THE SAMPLING. IN SUCH CASE, YOUR EMPLOYEE MUST SIGN THIS CERTIFICATION AS A WITNESS.

THIS CERTIFICATION MUST BE RETURNED, WITH THE REPRESENTATIVE WASTE SAMPLE, TO:

CHEMICAL WASTE MANAGEMENT, INC.
P.O. BOX 6741
PHOENIX, ARIZONA 85005

THE UNDERSIGNED CERTIFIES THAT HE/SHE OBTAINED A REPRESENTATIVE SAMPLE OF THE WASTE MATERIAL DESCRIBED IN THE "GENERATOR'S WASTE MATERIAL PROFILE SHEET" ABOVE REFERENCED, AND THAT THE FOLLOWING REPRESENTATIONS ARE TRUE AND CORRECT:

1. HOUR AND DATE OF SAMPLING: 0950, 10/10/85
2. SOURCE FROM WHICH SAMPLE TAKEN: 55 gal drum
3. EQUIPMENT AND SAMPLING METHOD USED: Vacuum operated composite liquid waste sampler (VACSAM), a modified coliwasa sampler
4. AMOUNT OF SAMPLE OBTAINED: 1 quart
5. TYPE OF CONTAINER INTO WHICH SAMPLE WAS PLACED: Glass Bottle
6. THE SAMPLING EQUIPMENT USED, AND THE CONTAINER INTO WHICH THE SAMPLE WAS PLACED, WERE THEMSELVES UNCONTAMINATED BEFORE USE.
7. AT THE TIME OF SAMPLING I AFFIXED A LABEL TO THE CONTAINER IN THE FOLLOWING FORM WITH THE FOLLOWING INFORMATION (FILL IN THIS PORTION, INCLUDING YOUR SIGNATURE, JUST AS IT APPEARS ON THE LABEL YOU PREPARED):

GENERATOR: Salt River Project
WASTE NAME: Grease
SAMPLE HOUR/DATE: 0950, 10/10/85
PROFILE SHEET CODE: F26958
SAMPLER SIGNATURE: Roderic Stipe

WITNESS VERIFICATION: I WAS PERSONALLY PRESENT DURING THE SAMPLING DESCRIBED; I DIRECTED THE WASTE SOURCE TO BE SAMPLED; AND I VERIFY THE INFORMATION ABOVE NOTED.

WITNESS: Dennis Green

SIGNATURE: Dennis Green

TITLE: Project Manager

EMPLOYER: Western Technologies Inc.

DATE: 1/07/86

SAMPLER NAME: Roderic Stipe

SIGNATURE: Roderic Stipe

TITLE: Project Manager

EMPLOYER: Western Technologies Inc.

DATE: 1/07/86

FORM WMI-51 (Rev. 12/84)
© 1980 WASTE MANAGEMENT, INC.

ease print or type. (Form designed for use on elite (12-pitch) typ er.)

Form roved. OMB No. 2000-0404. Expires 7-31-86

UNIFORM HAZARDOUS WASTE MANIFEST

21. Generator's US EPA ID No. AZD074452426

Manifest Document No. 10686

2. Page 1 of 2

Information in the shaded areas is not required by Federal law.

3. Generator's Name and Mailing Address
SRP Navajo Generating Station
P. O. Box W
Page, Arizona 86040

4. Generator's Phone (602) 236-2244

A. State Manifest Document Number

B. State Generator's ID

5. Transporter 1 Company Name: Chemical Waste Management, Inc.

6. US EPA ID Number: AZT050010180

C. State Transporter's ID

D. Transporter's Phone

7. Transporter 2 Company Name

8. US EPA ID Number

E. State Transporter's ID

F. Transporter's Phone

9. Designated Facility Name and Site Address

10. US EPA ID Number

G. State Facility's ID

H. Facility's Phone

	11. US DOT Description (Including Proper Shipping Name, Hazard Class and ID Number)	HM	12. Containers No.	Type	13. Total Quantity	14. Unit Wt/Vol	I. Waste No.
a.	Waste Flammable Liquid, n.o.s., R.Q., Flammable Liquid, UN1993	x		DM		P	F001,F003, F005
b.	Waste Alkaline Liquid, n.o.s., R.Q., Corrosive Material, NA1719	x		DM		P	D002
c.	Waste Hydrazine, aqueous solution, R.Q., Corrosive Material, UN2030	x		DM		P	D002
d.	Hazardous Waste Solid, n.o.s. (oil sludge) R.Q., ORM-E, NA9189	x		DM		P	D004

J. Additional Descriptions for Materials Listed Above
a. Liquids (paint-solvent)
b. Liquid (caustic cleaner)
c. Liquid (Hydrazine)
d. Solid Sludge (oil)

K. Handling Codes for Wastes Listed Above

15. Special Handling Instructions and Additional Information

Profile Sheet Codes: a. F26961 b. F26959 c. F26956 d. F26957

16. GENERATOR'S CERTIFICATION: I hereby declare that the contents of th ely described above by proper shipping na ansport by highway according to applicabl

Unless I am waste minimization certification under Secti waste generated to the degree I have deter posal currently available to me which minim

Printed/Typ Month Day Year

Page 6
For instructions to complete manifest

17. Transporter

Printed/Typ Month Day Year

18. Transporter

Printed/Type Month Day Year

19. Discrepancy

20. Facility Owne ed in Item 19.

Printed/Type Month Day Year

TRANSPORTER

FACILITY

tyle F15R-6 Labelmaster, Div. of American Labelmark Co. Inc. 60646

EPA Form 8700-22 (Rev. 4-85) Previous edition is obsolete.

Please print or type. (Form designed for use on elite (12-pitch writer.) m Approved. OMB No. 2000-0404. Expires 7-31-86

UNIFORM HAZARDOUS WASTE MANIFEST (Continuation Sheet)	21. Generator's US EPA ID No. AZD074452426	Manifest Document No. 10686	22. Page 2 of 2	Information in the shaded areas is not required by Federal law.

23. Generator's Name: SRP Navajo Generating Station, P. O. Box W, Page, Arizona 86040

L. State Manifest Document Number

M. State Generator's ID

24. Transporter Company Name: CHEMICAL WASTE MANAGEMENT, INC.

25. US EPA ID Number: AZT050010180

N. State Transporter's ID

O. Transporter's Phone: 602-243-6154

26. Transporter Company Name

27. US EPA ID Number

P. State Transporter's ID

Q. Transporter's Phone

	28. US DOT Description (Including Proper Shipping Name, Hazard Class, and ID Number)	HM	29. Containers No.	Type	30. Total Quantity	31. Unit Wt/Vol	R. Waste No.
a.	Waste Grease			DM		P	N/A
b.	Paint Related Wastes			DM		P	N/A
c.							
d.							
e.							
f.							
g.							
h.							
i.							

S. Additional Descriptions for Materials Listed Above — PROFILE SHEET NUMBERS:

a. F26958 b. F26960 c.

d. e. f.

g. h. i.

T. Handling Codes for Wastes Listed Above

32. Special Handling Instructions and Additional Information

GLOVES/GOGGLES/HARD HAT/PROTECTIVE CLOTHING

33. Transporter ____ Acknowledgement of Receipt of Materials

Printed/Typed Name | Signature | Date: Month Day Year

34. Transporter ____ Acknowledgement of Receipt of Materials

Printed/Typed Name | Signature | Date: Month Day Year

35. Discrepancy Indication Space

Please print or type. (Form designed for use on elite (12-pitch) typewriter.) Form Approved. OMB No. 2000-0404

UNIFORM HAZARDOUS WASTE MANIFEST

21. Generator's US EPA ID No.: AZI 4452426
Manifest Document No.: 10686
2. Page 1 of 2
Information in the shaded areas is not required by Federal law.

3. Generator's Name and Mailing Address: SRP Navajo Generating Station, P. O. Box W, Page, Arizona 86040
4. Generator's Phone (602) 236-2244

A. State Manifest Document Number
B. State Generator's ID

5. Transporter 1 Company Name: Chemical Waste Management, Inc.
6. US EPA ID Number: AZT050010180
C. State Transporter's ID
D. Transporter's Phone

7. Transporter 2 Company Name:
8. US EPA ID Number:
E. State Transporter's ID
F. Transporter's Phone

9. Designated Facility Name and Site Address: Chemical Waste Management, Inc, 35251 Old Skyline Road, Kettleman City, Ca. 93239
10. US EPA ID Number: CAT000646117
G. State Facility's ID
H. Facility's Phone

GENERATOR

	HM	11. US DOT Description (Including Proper Shipping Name, Hazard Class and ID Number)	12. Containers No.	Type	13. Total Quantity	14. Unit Wt/Vol	I. Waste No.
a.	x	Waste Flammable Liquid, n.o.s., R.Q., Flammable Liquid, UN1993	22	DM	7,252	P	F001,F003, F005
b.	x	Waste Alkaline Liquid, n.o.s., R.Q., Corrosive Material, NA1719	2	DM	529	P	D002
c.	~~x~~	~~Waste Hydrazine, aqueous solution, R.Q., Corrosive Material, UN2030~~	0	DM	0	P	D002
d.	x	~~Hazardous Waste Solid, n.o.s. (oil sludge) R.Q., ORM-E, NA9189~~	0 ~~1~~	DM	0 ~~452~~	P	D004

J. Additional Descriptions for Materials Listed Above
a. Liquids (paint-solvent)
b. Liquid (caustic cleaner)
c. Liquid (Hydrazine)
d. Solid Sludge (oil)

K. Handling Codes for Wastes Listed Above
A 99/03
B. 99/03

15. Special Handling Instructions and Additional Information

Profile Sheet Codes: a. F26961 b. F26959 c. ~~F26956~~ d. ~~F26957~~

16. **GENERATOR'S CERTIFICATION:** I hereby declare that the contents of this consignment are fully and accurately described above by proper shipping name and are classified, packed, marked, and labeled, and are in all respects in proper condition for transport by highway according to applicable international and national government regulations.
Unless I am a small quantity generator who has been exempted by statute or regulation from the duty to make a waste minimization certification under Section 3002(b) of RCRA, I also certify that I have a program in place to reduce the volume and toxicity of waste generated to the degree I have determined to be economically practicable and I have selected the method of treatment, storage, or disposal currently available to me which minimizes the present and future threat to human health and the environment.

Printed/Typed Name: Tom H. Schwartz
Signature: Tom H. Schwartz
Month 02 Day 18 Year 86

TRANSPORTER

17. Transporter 1 Acknowledgement of Receipt of Materials
Printed/Typed Name: Mark R Fiske
Signature: Mark R Fiske
Month 02 Day 18 Year 86

18. Transporter 2 Acknowledgement of Receipt of Materials
Printed/Typed Name:
Signature:
Month Day Year

FACILITY

19. Discrepancy Indication Space

20. Facility Owner or Operator: Certification of receipt of hazardous materials covered by this manifest except as noted in Item 19.
Printed/Typed Name: Stephen Pickell LT
Signature: Stephen Pickell LT
Month 2 Day 22 Year 86

Style F15R-6 Labelmaster, Div. of American Labelmark Co. Inc. 60646
EPA Form 8700-22 (Rev. 4-85) Previous edition is obsolete.

ORIGINAL-RETURN

ATTACHMENT 19

UNIFORM HAZARDOUS WASTE MANIFEST

21. Generator's US EPA ID No. AZD074452426 | Manifest Document No. 10686 | 2. Page 1 of 2 | Information in the shaded areas is not required by Federal law.

3. Generator's Name and Mailing Address: APS Navajo Generating Station, P. O. Box W, Page, Arizona 86040

4. Generator's Phone (602) 236-2244

A. State Manifest Document Number

B. State Generator's ID

5. Transporter 1 Company Name: Chemical Waste Management, Inc.

6. US EPA ID Number: AZT050010180

C. State Transporter's ID

D. Transporter's Phone

7. Transporter 2 Company Name

8. US EPA ID Number

E. State Transporter's ID

F. Transporter's Phone

9. Designated Facility Name and Site Address

10. US EPA ID Number

G. State Facility's ID

H. Facility's Phone

	11. US DOT Description (Including Proper Shipping Name, Hazard Class and ID Number)	HM	12. Containers No.	Type	13. Total Quantity	14. Unit Wt/Vol	I. Waste No.
a.	Waste Flammable Liquid, n.o.s., R.Q., Flammable Liquid, UN1993	x	22	DM	7,252	P	F001,F003, F005
b.	Waste Alkaline Liquid, n.o.s., R.Q., Corrosive Material, NA1719	x	2	DM	529	P	D002
c.	Waste Hydrazine, aqueous solution, R.Q., Corrosive Material, UN2030	x	0	DM	0	P	D002
d.	Hazardous Waste Solid, n.o.s. (oil sludge) R.Q., CERL-E, NA9189	x	1	DM	452	P	D004

J. Additional Descriptions for Materials Listed Above
a. Liquids (paint-solvent)
b. Liquid (caustic cleaner)
c. Liquid (Hydrazine
d. Solid Sludge (oil)

K. Handling Codes for Wastes Listed Above

15. Special Handling Instructions and Additional Information

Profile Sheet Codes: a. F26961 b. F26959 c. F26956 d. F26957

16. **GENERATOR'S CERTIFICATION:** I hereby declare that the contents of this consignment are fully and accurately described above by proper shipping name and are classified, packed, marked, and labeled, and are in all respects in proper condition for transport by highway according to applicable international and national government regulations.

Unless I am a small quantity generator who has been exempted by statute or regulation from the duty to make a waste minimization certification under Section 3002(b) of RCRA, I also certify that I have a program in place to reduce the volume and toxicity of waste generated to the degree I have determined to be economically practicable and I have selected the method of treatment, storage, or disposal currently available to me which minimizes the present and future threat to human health and the environment.

Printed/Typed Name | Signature | Month Day Year

17. Transporter 1 Acknowledgement of Receipt of Materials

Printed/Typed Name: Mark K. Fike | Signature | Month Day Year

18. Transporter 2 Acknowledgement of Receipt of Materials

Printed/Typed Name | Signature | Month Day Year

19. Discrepancy Indication Space

20. Facility Owner or Operator: Certification of receipt of hazardous materials covered by this manifest except as noted in Item 19.

Printed/Typed Name | Signature | Month Day Year 2 19 86

GENERATOR — TRANSPORTER — FACILITY

Style F15R-6 Labelmaster, Div. of American Labelmark Co. Inc. 60646

EPA Form 8700-22 (Rev. 4-85) Previous edition is obsolete.

FILE COPY OR STATE COPY

Please print or type. (Form designed for use on elite (12-pitch) typewriter.)

Form Approved. OMB No. 2000-0404. Expires 7-31-86

UNIFORM HAZARDOUS WASTE MANIFEST (Continuation Sheet)	21. Generator's US EPA ID No.	Manifest Document No.	2. Page	Information in the shaded areas is not required by Federal law.
	AZD0/4452426	10685	2 of 2	

23. Generator's Name: SRP Navajo Generating Station, P. O. Box W, Page, Arizona 86040

L. State Manifest Document Number

M. State Generator's ID

24. Transporter Company Name: CHEMICAL WASTE MANAGEMENT, INC.

25. US EPA ID Number: AZT050010180

N. State Transporter's ID

O. Transporter's Phone: 602-243-6154

26. Transporter Company Name

27. US EPA ID Number

P. State Transporter's ID

Q. Transporter's Phone

28. US DOT Description (Including Proper Shipping Name, Hazard Class, and ID Number)	HM	29. Containers No.	Type	30. Total Quantity	31. Unit Wt/Vol	R. Waste No.
a. Waste Grease		1	DM	65	P	N/A
b. Paint Related Wastes		9	DM	548	P	N/A
c.						
d.						
e.						
f.						
g.						
h.						
i.						

S. Additional Descriptions for Materials Listed Above: PROFILE SHEET NUMBERS

a. F26958 b. F26960 c.

d. e. f.

g. h. i.

T. Handling Codes for Wastes Listed Above

32. Special Handling Instructions and Additional Information

GLOVES/GOGGLES/HARD HAT/PROTECTIVE CLOTHING

33. Transporter ____ Acknowledgement of Receipt of Materials

Printed/Typed Name | Signature | Date Month Day Year

34. Transporter ____ Acknowledgement of Receipt of Materials

Printed/Typed Name | Signature | Date Month Day Year

35. Discrepancy Indication Space

GENERATOR

TRANSPORTER

FACILITY

Style F16-6 Labelmaster, Chicago, IL 60646

FILE COPY OR STATE COPY

EPA Form 8700-22A (3-84)

Please print or type. (Form designed for use on elite pitch) typewriter.) N-32 Form Approved. OMB No. 2000-0404. Expires 7-31-86

UNIFORM HAZARDOUS WASTE MANIFEST (Continuation Sheet)	21. Generator's US EPA ID No.	Manifest Document No.	2. Page	Information in the shaded areas is not required by Federal law.
	AZD074452426	10686	2 of 2	

23. Generator's Name: SRP Navajo Generating Station, P. O. Box W, Page, Arizona 86040	L. State Manifest Document Number
	M. State Generator's ID
24. Transporter Company Name: CHEMICAL WASTE MANAGEMENT, INC. — 25. US EPA ID Number: AZT050010180	N. State Transporter's ID
	O. Transporter's Phone 602-243-6154
26. Transporter Company Name — 27. US EPA ID Number	P. State Transporter's ID
	Q. Transporter's Phone

	28. US DOT Description (Including Proper Shipping Name, Hazard Class, and ID Number)	HM	29. Containers No.	Type	30. Total Quantity	31. Unit Wt/Vol	R. Waste No.
a.	Waste Grease		1	DM	65	P	N/A
b.	Paint Related Wastes		9	DM	548	P	N/A
c.							
d.							
e.							
f.							
g.							
h.							
i.							

GENERATOR

S. Additional Descriptions for Materials Listed Above — PROFILE SHEET NUMBERS:
a. F26958 b. F26960 c.
d. e. f.
g. h. i.

T. Handling Codes for Wastes Listed Above
A 99/03
B 99/03

32. Special Handling Instructions and Additional Information
GLOVES/GOGGLES/HARD HAT/PROTECTIVE CLOTHING

TRANSPORTER

33. Transporter ____ Acknowledgement of Receipt of Materials		Date
Printed/Typed Name: Mark R Fiske	Signature: Mark R Fiske	Month Day Year: 02 18 86
34. Transporter ____ Acknowledgement of Receipt of Materials		Date
Printed/Typed Name	Signature	Month Day Year

FACILITY

35. Discrepancy Indication Space

Please print or type. (Form designed for use on elite (12 pitch) typewriter.)

Form Approved. OMB No. 2000-0404. Expires 7-31-86

UNIFORM HAZARDOUS WASTE MANIFEST

21. Generator's US EPA ID No. AZD074452426

Manifest Document No. 10685

2. Page 1 of 2

Information in the shaded areas is not required by Federal law.

3. Generator's Name and Mailing Address: SRP Navajo Generating Station, P. O. Box W, Page, Arizona 86040

4. Generator's Phone (602) 236-2244

A. State Manifest Document Number

B. State Generator's ID

5. Transporter 1 Company Name: Chemical Waste Management, Inc.

6. US EPA ID Number: AZT050010180

C. State Transporter's ID

D. Transporter's Phone

7. Transporter 2 Company Name

8. US EPA ID Number

E. State Transporter's ID

F. Transporter's Phone

9. Designated Facility Name and Site Address: [illegible]

10. US EPA ID Number: [illegible]

G. State Facility's ID

H. Facility's Phone

GENERATOR

	11. US DOT Description (Including Proper Shipping Name, Hazard Class and ID Number)	HM	12. Containers No.	Type	13. Total Quantity	14. Unit Wt/Vol	I. Waste No.
a.	Waste Flammable Liquid, n.o.s., R.Q., Flammable Liquid, UN1993	x	22	DM	7,252	P	F001,F003, F005
b.	Waste Alkaline Liquid, n.o.s., R.Q., Corrosive Material, NA1719	x	2	DM	529	P	D002
c.	Waste Hydrazine, aqueous solution, R.Q., Corrosive Material, UN2030	x	0	DM	0	P	D002
d.	Hazardous Waste Solid, n.o.s. (oil sludge) R.Q., CERCLA, NA9189	x	1	DM	452	P	D004

J. Additional Descriptions for Materials Listed Above

a. Liquids (paint-solvent)
b. Liquid (caustic cleaner)
c. Liquid (Hydrazine)
d. Solid Sludge (oil)

K. Handling Codes for Wastes Listed Above

15. Special Handling Instructions and Additional Information

Profile Sheet Codes: a. F26961 b. F26959 c. F26956 d. F26957

16. GENERATOR'S CERTIFICATION: I hereby declare that the contents of this consignment are fully and accurately described above by proper shipping name and are classified, packed, marked, and labeled, and are in all respects in proper condition for transport by highway according to applicable international and national government regulations.

Unless I am a small quantity generator who has been exempted by statute or regulation from the duty to make a waste minimization certification under Section 3002(b) of RCRA, I also certify that I have a program in place to reduce the volume and toxicity of waste generated to the degree I have determined to be economically practicable and I have selected the method of treatment, storage, or disposal currently available to me which minimizes the present and future threat to human health and the environment.

Printed/Typed Name: Tom H Schwartz | Signature: [illegible] | Month 02 Day 18 Year 86

TRANSPORTER

17. Transporter 1 Acknowledgement of Receipt of Materials

Printed/Typed Name: Mark R Fiske | Signature: Mark R Fiske | Month 02 Day 17 Year 86

18. Transporter 2 Acknowledgement of Receipt of Materials

Printed/Typed Name | Signature | Month Day Year

FACILITY

19. Discrepancy Indication Space

20. Facility Owner or Operator: Certification of receipt of hazardous materials covered by this manifest except as noted in Item 19.

Printed/Typed Name | Signature | Month Day Year

Please print or type. (Form designed for use on elite (12-pitch) typewriter.) Form Approved. OMB No. 2000-0404. Expires 7-31-86

UNIFORM HAZARDOUS WASTE MANIFEST (Continuation Sheet)	21. Generator's US EPA ID No. AZL 4452426	Manifest Document No. 10685	22. Page of 2	Information in the shaded areas is not required by Federal law.

23. Generator's Name: SRP Navajo Generating Station, P. O. Box W, Page, Arizona 86040

L. State Manifest Document Number

M. State Generator's ID

24. Transporter Company Name: CHEMICAL WASTE MANAGEMENT, INC.

25. US EPA ID Number: AZT050010180

N. State Transporter's ID

O. Transporter's Phone: 602-243-6154

26. Transporter Company Name

27. US EPA ID Number

P. State Transporter's ID

Q. Transporter's Phone

	28. US DOT Description (Including Proper Shipping Name, Hazard Class, and ID Number)	HM	29. Containers No.	Type	30. Total Quantity	31. Unit Wt/Vol	R. Waste No.
a.	Waste Grease		1	DM	65	P	N/A
b.	Paint Related Wastes		9	DM	548	P	N/A
c.							
d.							
e.							
f.							
g.							
h.							
i.							

GENERATOR

S. Additional Descriptions for Materials Listed Above: PREVIOUS SHEET NUMBERS a. 326958 b. 326960 c. d. e. f. g. h. i.

T. Handling Codes for Wastes Listed Above

32. Special Handling Instructions and Additional Information: GLOVES/GOGGLES/HARD HAT/PROTECTIVE CLOTHING

TRANSPORTER

33. Transporter ____ Acknowledgement of Receipt of Materials

Printed/Typed Name: [illegible] Signature: [illegible] Date: Month Day Year

34. Transporter ____ Acknowledgement of Receipt of Materials

Printed/Typed Name Signature Date: Month Day Year

FACILITY

35. Discrepancy Indication Space

Style F16-6 Labelmaster, Chicago, IL 60646 EPA Form 8700-22A (3-84)

GENERATOR COPY

Chemical Waste Management, Inc.

602/243-6154 • P.O. Box 6741 • 2301 W. Broadway Road
Phoenix, Arizona 85005

24 HOUR RADIO DISPATCHED SERVICE

WORK ORDER
№ 6261

WORK ORDER

For Salt River Project
Navajo Generating Station
Page, Arizona

Date Feb 18th, 1986

Truck No. 1438 Size _____ Bbls

Your Req. No. _____

Vac. ☐ Flat Bed ☒ Roll off ☐

TIME ON JOB

Time: From _____ a.m. p.m. to _____ a.m. p.m.
Time: From _____ a.m. p.m. to _____ a.m. p.m.
Total Hours ____

LOADING TIME

Start 1:00 a.m. p.m. Finish 3:45 a.m. p.m.

UNLOADING TIME

Start _____ a.m. p.m. Finish _____ a.m. p.m.

Total Hours 2 3/4

QUANTITY	LOADED AT	DELIVERED TO
22 DM	Page, Az - SRP	1st Stop
9 DM		Milk Run - Drums
2 DM	34 Total DM's	
1 DM		Manifested to:
		Kett City, Ca
		Sales Tax $

Driver Mark Fiske _____ Hrs. Total Time @ $_____ = $_____

Received by [signature]

Total Price = $_____

State Hazardous Waste Hauler Registration No. 021 E.P.A. No. AZT050010180

Waste profile sheet no. _____ **Waste Manifest No.** 10686

137-4380

SALT RIVER PROJECT

MATERIAL SHIPPING DOCUMENT

SUPPLY DEPT. - RECEIVING CONTROL

MSD No. 13345

DATE 02/18/86

SHIP TO

CHEMICAL WASTE MANAGEMENT INC.
AT NAVAJO GENERATING STATION

SHIP VIA	PREPAID	COLLECT	NO. PIECES	WEIGHT
Chemical Waste Mgt. Truck			34 35	8420 8840
	VALUE	INSURANCE YES	INSURANCE NO	INS. AMOUNT

ITEM NO.	QUANTITY	DESCRIPTION	CODE NO.	UNIT PRICE	UNIT	QUANTITY RETURNED	EXTENSION
A	22	Waste Flammable Liquid	N/C		DR	22	
B	2	Waste Alkaline Liquid	N/C		DR	2	
C	1	Hazardous Waste Solids	N/C		DR	1	
D	1	Waste Grease	N/C		DR	1	
E	9	Paint Related Wastes	N/C		DR	9	

MANIFEST

PURCHASE ORDER NO. N - 32

NOTICE OF RECEIPT NO. N/A

MATERIAL RECEIVED IN EXCEPTION NO. N/A

ACCOUNT NO. N86-14021-1

TRANS CODE N/A

TRANSPORTATION CHARGES N86-14021-1

DAMAGE CLAIM WORK ORDER NO. N/A

DEBIT ACCOUNT NO. N/A

PREPARED BY Schwartz

RECEIVING CONTROL - APPROVED BY Schwartz

REASON FOR SHIPPING MATERIAL

RECEIVED BY Mah Fike

DATE 2-18-86

ACCOUNTS PAYABLE

Waste Management, Inc.

GENERATOR'S WASTE MATERIAL PROFILE SHEET

WASTE PROFILE SHEET CODE: PHX
TSDR: F26957

A. GENERAL INFORMATION Drum No. N234

GENERATOR NAME: Salt River Project
TRANSPORTER: Chemical Waste Mgmt., Inc.
FACILITY ADDRESS: Navajo Generating Station
State Hwy 98, 5 mi. east of Page, Arizona
Page, Arizona
TRANSPORTER PHONE: (602) 243-6154
GENERATOR USEPA I.D.: A Z D 0 7 4 4 5 2 4 2 6
GENERATOR STATE I.D.: N/A
TECHNICAL CONTACT: Art Oros
TITLE: Supr., Matls. Reclam.
PHONE: (602) 236-2244
NAME OF WASTE: Omala Oil Sludge
PROCESS GENERATING WASTE: Facility Clean-up

B. PHYSICAL CHARACTERISTICS OF WASTE

COLOR: Black

ODOR: ☐ NONE ☒ MILD ☐ STRONG
DESCRIBE: Tar

PHYSICAL STATE @ 70°F: ☐ SOLID ☒ SEMI-SOLID ☐ LIQUID ☐ POWDER

LAYERS: ☐ MULTILAYERED ☐ BI-LAYERED ☒ SINGLE PHASED

FREE LIQUIDS: ☐ YES ☒ NO
VOLUME: %

pH: ☐ < 2 ☐ 7.1-10 ☐ N/A ☒ 2-4 ☐ 10.1-12.5 ☐ 4.1-6.9 ☐ > 12.5 ☐ 7 ☒ EXACT 3.5

SPECIFIC GRAVITY: ☐ < .8 ☐ 1.3-1.4 ☐ .8-1.0 ☒ 1.5-1.7 ☐ 1.1-1.2 ☒ > 1.7 ☐ EXACT

FLASH POINT: ☐ < 70°F ☒ > 200°F ☒ CLOSED CUP ☐ 70°F-100°F ☐ NO FLASH ☐ OPEN CUP ☐ 101°F-139°F ☐ EXACT ☐ 140°F-200°F

C. CHEMICAL COMPOSITION (TOTALS MUST ADD TO 100%)

Oil and oil sludge	100 %

D. METALS ☒ TOTAL (PPM) ☐ EPA EXTRACTION PROCEDURE (mg/L)

ARSENIC (As)	0-10	SELENIUM (Se)	<2
BARIUM (Ba)	<2	SILVER (Ag)	<5
CADMIUM (Cd)	<2	COPPER (Cu)	None
CHROMIUM (Cr)	0-10	NICKEL (Ni)	None
MERCURY (Hg)	<0.1	ZINC (Zn)	None
LEAD (Pb)	0-10	THALLIUM (Tl)	None
CHROMIUM-HEX (Cr + 6)	N/A		

E. OTHER COMPONENTS - TOTAL (PPM)

CYANIDES	None	PCB'S	<5
SULFIDES	None	PHENOLICS	None

F. SHIPPING INFORMATION

HAZARDOUS MATERIAL? ☒ YES ☐ NO
PROPER SHIPPING NAME: Hazardous Waste Solid, n.o.s. (Oil Sludge)
HAZARD CLASS: ORM-E I.D. NO: NA9189 R.Q.: 1 lb
MODE OF SHIPMENT: ☐ BULK LIQUID ☐ BULK SOLID ☒ DRUM (TYPE/SIZE) 17E/H, 55 gal
ESTIMATED VOLUME: GALS. CUBIC YARDS OTHER 1 drum
PER: ☐ ONE TIME ☐ WEEK ☐ MONTH ☐ QUARTER ☒ YEAR ☐

G. HAZARDOUS CHARACTERISTICS

REACTIVITY: ☒ NONE ☐ PYROPHORIC ☐ SHOCK SENSITIVE ☐ EXPLOSIVE ☐ WATER REACTIVE ☐ OTHER

OTHER HAZARDOUS CHARACTERISTICS: ☒ NONE ☐ RADIOACTIVE ☐ ETIOLOGICAL ☐ PESTICIDE MANUFACTURING WASTE ☐ OTHER

USEPA HAZARDOUS WASTE? ☒ YES ☐ NO
USEPA HAZARDOUS CODE(S): D004
STATE HAZARDOUS WASTE? ☒ YES ☐ NO
STATE CODE(S): D004

H. SPECIAL HANDLING INFORMATION

Personal Protective Equipment: Rubber gloves and protective clothing

☐ ADDITIONAL PAGE(S) ATTACHED

I HEREBY CERTIFY THAT ALL INFORMATION SUBMITTED IN THIS AND ALL ATTACHED DOCUMENTS IS COMPLETE AND ACCURATE, AND THAT ALL KNOWN OR SUSPECTED HAZARDS HAVE BEEN DISCLOSED.

AUTHORIZED SIGNATURE TITLE DATE

1-31-86

Chemical Waste Management, Inc.
2301 W. Broadway Road • P.O. Box 6741
Phoenix, Arizona 85005
602/243-6154

Art Oros:

Enclosed please find the waste profile Sheet F26956 for waste hydrazine. After Speaking with our disposal site (Kettleman) I learned that we cannot handle hydrazine > 15%. Dennis Green (Western Technologies) Suggested I return the profile sheet to you as he may have some other alternatives.

If I can be of any Service to you, feel free to contact me.

Sincerely,

Lori Feidler
Lab Mgr.

Waste Management, Inc.

GENERATOR'S WASTE MATERIAL PROFILE SHEET

WASTE PROFILE SHEET CODE

PHX TSDR F26956/020

A GENERAL INFORMATION

GENERATOR NAME: Salt River Project

FACILITY ADDRESS: Navajo Generating Station
State Hwy 98, 5 mi east of Page, Arizona
Page, Arizona

TRANSPORTER: Chemical Waste Mgmt., Inc.

TRANSPORTER PHONE: (602) 243-6154

GENERATOR USEPA I.D. AZD074452426

GENERATOR STATE I.D. ~~N/A~~ AZD074452426 1-22-86 LAT per AO

TECHNICAL CONTACT: Art Oros TITLE: Supr., Matls. Reclam PHONE: (602) 236-2244

NAME OF WASTE: Hydrazine

PROCESS GENERATING WASTE: Facility Clean-up (Off-Specification Product)

B PHYSICAL CHARACTERISTICS OF WASTE

COLOR

ODOR ☐ NONE ☐ MILD ☐ STRONG
DESCRIBE

PHYSICAL STATE @ 70°F: ☐ SOLID ☐ SEMI-SOLID ☐ LIQUID ☐ POWDER

LAYERS: ☐ MULTILAYERED ☐ BI-LAYERED ☐ SINGLE PHASED

FREE LIQUIDS: ☐ YES ☐ NO
VOLUME %

pH: ☐ < 2 ☐ 7.1-10 ☐ N/A ☐ 2-4 ☐ 10.1-12.5 ☐ 4.1-6.9 ☐ > 12.5 ☐ EXACT

SPECIFIC GRAVITY: ☐ < .8 ☐ 1.3-1.4 ☐ .8-1.0 ☐ 1.5-1.7 ☐ 1.1-1.2 ☐ > 1.7 ☐ EXACT

FLASH POINT: ☐ < 70°F ☐ > 200°F ☐ CLOSED CUP ☐ 70°F-100°F ☐ NO FLASH ☐ OPEN CUP ☐ 101°F-139°F ☐ EXACT ☐ 140°F-200°F

C CHEMICAL COMPOSITION (TOTALS MUST ADD TO 100%)

35% aqueous hydrazine solution	100 %
See attached material safety data sheet (MSDS)	%

D METALS ☐ TOTAL (PPM) ☐ EPA EXTRACTION PROCEDURE (mg/L)

ARSENIC (As)		SELENIUM (Se)	
BARIUM (Ba)		SILVER (Ag)	
CADMIUM (Cd)		COPPER (Cu)	
CHROMIUM (Cr)		NICKEL (Ni)	
MERCURY (Hg)		ZINC (Zn)	
LEAD (Pb)		THALLIUM (Tl)	
CHROMIUM-HEX (Cr + 6)			

E OTHER COMPONENTS - TOTAL (PPM)

CYANIDES		PCB'S	
SULFIDES		PHENOLICS	

F SHIPPING INFORMATION

D.O.T. HAZARDOUS MATERIAL? ☒ YES ☐ NO

PROPER SHIPPING NAME: Waste Hydrazine, aqueous solution

HAZARD CLASS: Corrosive Material I.D. NO. UN2030 R.Q. 1 lb

METHOD OF SHIPMENT: ☐ BULK LIQUID ☐ BULK SOLID ☒ DRUM (TYPE/SIZE) 30 gal

ANTICIPATED VOLUME: GALS. OTHER

(18 drums initially) PER: ☐ ONE TIME ☐ WEEK ☐ QUARTER ☒ YEAR

G HAZARDOUS CHARACTERISTICS

REACTIVITY: ☐ NONE ☐ PYROPHORIC ☐ SHOCK SENSITIVE ☐ EXPLOSIVE ☐ WATER REACTIVE ☐ OTHER

OTHER HAZARDOUS CHARACTERISTICS: ☐ NONE ☐ RADIOACTIVE ☐ ETIOLOGICAL ☐ PESTICIDE MANUFACTURING WASTE ☐ OTHER

HAZARDOUS WASTE? ☐ YES ☐ NO

HAZARDOUS CODE(S)

HAZARDOUS WASTE? ☐ YES ☐ NO

CODE(S)

2116 Hydrazine carbo-thioamide

P068 Hydrazine methyl

H SPECIAL HANDLING INFORMATION

Corrosive

☐ ADDITIONAL PAGE(S) ATTACHED

I HEREBY CERTIFY THAT ALL INFORMATION SUBMITTED IN THIS AND ALL ATTACHED DOCUMENTS IS COMPLETE AND ACCURATE AND THAT ALL KNOWN OR SUSPECTED HAZARDS HAVE BEEN DISCLOSED.

AUTHORIZED SIGNATURE TITLE Supervisor DATE

ITEM V-1-2-3-4

Salt River Project
Loss Control Division

CHEMICAL BULLETIN #69

Hydrazine (35%)

TRADENAME:
NALCO 19-H

DESCRIPTION:
Colorless liquid with an ammonia odor.

USES:
Oxygen scavenger in boiler feedwater systems.

POTENTIAL HEALTH EFFECTS:
Contact may cause eye and skin burns and result in hypersensitivity in the skin. Vapors may cause lung and mucous membrane injury. May be absorbed through the skin in toxic amounts.

Hydrazine is a suspected carcinogen. Chronic exposure may result in systemic damage to the liver and kidneys.

FIRE/EXPLOSION HAZARDS:
This product is a 35% hydrazine solution in water. Therefore, characteristics are much reduced from pure anhydrous hydrazine.

Flash point 230 degrees F.

Rags, wood and other porous material subject to spontaneous heating if contaminated with this product.

REACTIVITY:
May corrode cork, rubber and other organic materials. It may decompose when heated to form highly toxic nitrogen compounds. Oxidizing materials may also decompose hydrazine.

(FOR PROTECTIVE MEASURES, SEE REVERSE SIDE)

Weight for F 26961 item A page 1 of 2

~~533~~
534

N-201	60#
213	178#
214	152#
215	457#
216	585#
217	541#
218	385#
219	396#
220	693#
221	587
222	112#
223	480#
224	469#
225	430#
226	385#
227	244#
228	358#
230	283#
232	144#
242	175#
243	60#
244	72#
	7,252.00

1280
- 487
793

Weight for F 26959 item B page 1 of 2

N-206 — 69#
235 460#

529

Weight for F 26956 item C page 1 of 2
(hydrazine not mark ~~must be~~

14 X 250 = 3,500

N-245 124
N-246 170
N 233 86

3,880 #

Weight for F26957 item D page 1 of 2

N-234 452#

452

Weight for F 26958 item A page 2 of 2

N-204 65#

65#

Weight for F 26960 item B pg 2 of 2

N-200	60#
202	43#
203	49#
205	72#
207	61#
208	61#
209	54#
211	65#
212	83#

548

SRP Memo

DGS.125 *Date* March 2, 1988

TO Harold Voepel, Plant Manager, NGS

FROM David Sultana, Sr. Staff Scientist, Environmental Services

RE: 1987 Annual Hazardous Waste Report

ARIZONA DEPARTMENT OF ENVIRONMENTAL QUALITY

GENERATOR ANNUAL HAZARDOUS WASTE REPORT FOR 1987

I. NON-REGULATED STATUS

Complete this section only if you did not generate regulated quantities of hazardous waste at any time during the 1987 calendar year. Circle the one code at right that best describes your status during the entire year (see instructions for explanation of codes).

1-Non-handler
2-Conditionally Exempt SQG
3-100 to 1000 kg Generator
4-Exempt _____
5-Out of Business
6-Transporter

II. GENERATOR'S USEPA ID NUMBER

A Z D 0 7 4 4 5 2 4 2 6

This Installation's Non-Regulated Status is Expected to Apply:

_____ For 1987 Only
_____ Permanently
_____ Other _____

III. NAME OF ESTABLISHMENT

SALT RIVER PROJECT NAVAJO GENSTATN

IV. ESTABLISHMENT MAILING ADDRESS

Street or P.O. Box PO BOX 5205 ENVIRONS

City or Town PHOENIX

County MARICOPA State AZ Zip 85072

V. LOCATION OF ESTABLISHMENT (If different from Section IV above)

Street or Route No. 5 MILE POINT WY 98

City or Town PAGE

County COCONINO State AZ Zip 86040

VI. ESTABLISHMENT CONTACT

Name (Last, First) SULTANA, DAVID

Phone Number (Area code and no.) 602-236-7728

VII. CERTIFICATION

I certify under penalty of law that this document and all attachments were prepared under my direction or supervision in accordance with a system designed to assure that qualified personnel properly gather and evaluate the information submitted. Based on my inquiry of the person or persons who manage the system, or those persons directly responsible for gathering the information, the information submitted is, to the best of my knowledge and belief, true, accurate and complete. I am aware that there are significant penalties for submitting false information, including the possibility of fine and imprisonment for knowing violations.

H. C. Voepel, Plant Mgr., N.G.S.		H C Voepel	2/23/88
Print/Type Name	Title	Signature	Date

ARIZONA DEPARTMENT OF ENVIRONMENTAL QUALITY

GENERATOR ANNUAL HAZARDOUS WASTE REPORT FOR 1987 (cont.)

VIII. GENERATOR'S USEPA ID NO. A Z D 0 7 4 4 5 2 4 2 6

IX. FACILITY NAME

Chemical Waste Management, Inc.

X. FACILITY'S USEPA ID NO.

C A T 0 0 0 6 4 6 1 1 7

XI. FACILITY ADDRESS

35251 Old skyline Road
Kettleman City, CA 93239

XII. TRANSPORTER(S) USED

Chemical Waste Management
3003 Butterfield Road
Oak Brook, IL 60521
ILD099202681

XIII. WASTE IDENTIFICATION

	A	B	C		D	E
	DESCRIPTION OF WASTE	DOT CODE	USEPA WASTE NO.		AMOUNT OF WASTE	U/M
1	EP Toxic, Oil Sludge, Arsenic	1 4	D 0 0 4		2 0 5	K
2						
3						
4						
5						
6						
7						
8						

XIV. COMMENTS(enter information by section number - see instructions)

ARIZONA DEPARTMENT OF ENVIRONMENTAL QUALITY

GENERATOR ANNUAL HAZARDOUS WASTE REPORT FOR 1987 (cont.)

VIII. GENERATOR'S USEPA ID NO. A Z D 0 7 4 4 5 2 4 2 6

IX. FACILITY NAME

ENSCO, Inc.

X. FACILITY'S USEPA ID NO.

A R D 0 6 9 7 4 8 1 9 2

XI. FACILITY ADDRESS

American Road
El Dorado, AR 71730

XII. TRANSPORTER(S) USED

Chemical Disposal Company
P.O. Drawer 397
Rillito, AZ 85654
AZT050010008

XIII. WASTE IDENTIFICATION

	A	B	C		D	E
	DESCRIPTION OF WASTE	DOT CODE	USEPA WASTE NO.		AMOUNT OF WASTE	U/M
1	Spent non-halogenated solvents liquids, approx., 25% Xylene 25% Toluene	0 8	F 0 0 3 F 0 0 1	F 0 0 5	5 5 9 8	K
2	Spent non-halogenated solvent, paint sludge approx. 25% Xylene, 25% Toluene	0 8	F 0 0 3	F 0 0 5	2 9 2 0	K
3	Spent non-halogenated solvents, grease, approx. 10% Xylene, 10% Toluene	0 8	F 0 0 3	F 0 0 5	2 7 3 4	K
4						
5						
6						
7						
8						

XIV. COMMENTS(enter information by section number - see instructions)

ARIZONA DEPARTMENT OF ENVIRONMENTAL QUALITY

GENERATOR ANNUAL HAZARDOUS WASTE REPORT FOR 1987 (cont.)

VIII. GENERATOR'S USEPA ID NO. A Z D 0 7 4 4 5 2 4 2 6

IX. FACILITY NAME

Rollins Environmental Services, Inc.

X. FACILITY'S USEPA ID NO.

T X 0 0 5 5 1 4 1 3 7 8

XI. FACILITY ADDRESS

2027 Battle Ground Road
Deer Park, TX 77536

XII. TRANSPORTER(S) USED

Chemical Disposal Company
P.O. Drawer 397
Rillito, AZ 85654
AZT050010008

XIII. WASTE IDENTIFICATION

	A	B	C		D	E
	DESCRIPTION OF WASTE	DOT CODE	USEPA WASTE NO.		AMOUNT OF WASTE	U/M
1	EP Toxic solid debris, Mercury - 0.2 ppm	15	D009		433	K
2	Spent non-halogenated solvent, paint liquid, approx. 20% Xylene, 20% Toluene	08	F003	F005	2694	K
3	Spent halogenated and non-halogenated solvent, oil-liquid, approx. 150 ppm MeCl, 35,000 ppm 1,1,1 Trichloroethane, 740 ppm Trichloroethylene, 310 ppm Toluene	01	F001 F003	F005	1116	K
X						
4. X	Spent non-halogenated solvent, paint sludge approx. 30% Xylene, 30% Toluene	08	F003	F005	710	K
6						
7						
8						

XIV. COMMENTS(enter information by section number - see instructions)

ARIZONA DEPARTMENT OF ENVIRONMENTAL QUALITY

GENERATOR ANNUAL HAZARDOUS WASTE REPORT FOR 1987 (cont.)

VIII. GENERATOR'S USEPA ID NO. A Z D 0 7 4 4 5 2 4 2 6

IX. FACILITY NAME

X. FACILITY'S USEPA ID NO.

XI. FACILITY ADDRESS

XII. TRANSPORTER(S) USED

XIII. WASTE IDENTIFICATION

	A	B	C		D	E
	DESCRIPTION OF WASTE	DOT CODE	USEPA WASTE NO.		AMOUNT OF WASTE	U/M
1	Waste ignitable liquid	0 8	D 0 0 1		7 2 6	K
2	Spent non-halogenated solvents, paint liquid	0 8	F 0 0 3	F 0 0 5	7 2 3	K
3	Waste Corrosive Liquid	1 5	D 0 0 2		3 0	K
4						
5						
6						
7						
8						

XIV. COMMENTS(enter information by section number - see instructions)
"1987 Generated -- Stored on-site less than 90 days as of December 31, 1987".

ARIZONA DEPARTMENT OF ENVIRONMENTAL QUALITY

GENERATOR ANNUAL HAZARDOUS WASTE REPORT FOR 1987 (cont.)

XV. GENERATOR'S USEPA ID NO. |A|Z|D|0|7|4|4|5|2|4|2|6|

XVI. WASTE MINIMIZATION (narrative description)

In our efforts to comply with the waste minimization requirements of the hazardous waste regulations, a study was completed to identify potential non-hazardous solvents that could replace hazardous solvents that were being used. The study identified two non-hazardous solvents that were acceptable. The two non-hazardous solvents were chosen for use and the prior waste streams of hazardous solvents were totally eliminated.

ARIZONA DEPARTMENT OF ENVIRONMENTAL QUALITY

GENERATOR ANNUAL HAZARDOUS WASTE REPORT FOR 1987 (cont.)

XV. GENERATOR'S USEPA ID NO. |A|Z|D|0|7|4|4|5|2|4|2|6|

XVI. WASTE MINIMIZATION (narrative description)

In our efforts to comply with the waste minimization requirements of the hazardous waste regulations, a study was completed to identify potential non-hazardous solvents that could replace hazardous solvents that were being used. The study identified two non-hazardous solvents that were acceptable. The two non-hazardous solvents were chosen for use and the prior waste streams of hazardous solvents were totally eliminated.

1050222 MS25 '/15/88

STOCK: 1050222 DESC: CHROMATE, NALCO 8320 30 GALLON D.. UOI: DR ICC: Y

UNIT PRICE: 637.4644 QTYBAL: 9.00 VALBAL: 5737.18

QTY-REQD: 0 MAXIMUM QTYBAL: 0 ABC-CODE:

QTY ON RES: 0.00 ON ORD: 0.00

LST ACT	PO NUMBER	SEQ NO.	DATE ORDERED	DATE EXPECTED	QUANTITY ORDERED	QUANTITY RECEIVED	DATE RECEIVED

TO SCROLL FORWARD PRESS PF2 KEY ALL ITEMS ARE DISPLAYED ON SCREEN

	2ND PREVIOUS YEAR	PREVIOUS YEAR 87	CURRENT YTD -88
RECEIPTS	10 -86	6	5
ISSUES	9-	6-	6-
TRANSFERS OUT	0	0	0
REMOVALS	0	0	0
NET OTHER	0	0	0

TO CONTINUE ENTER KEY- NEXT STOCK CODE AND PF1 KEY - TO TERMINATE CLEAR

ATTACHMENT 21

1050222 MS25 1/15/88

STOCK: 1050222 DESC: CHROMATE, NALCO 8320 30 GALLON D UOI: DR ICC: Y00

UNIT PRICE: 637.4644 QTYBAL: 9.00 ONORDR: 0.00

QTY-REQD: 0 RESERV: 0.00

MONTHS ON HAND/ON ORDER: 9.00

MAIN WHSES: 61 00 00 00 00 SYS AVG MONTHLY USAGE: 1

WHSE NO	CD	LAST ISSUE	LEAD TIME	AVG MTH USAGE	CRIT POINT	ORDER POINT	QUANTITY ON HAND	ACT FLG	ACTION DATE	MOS ON HAND	ORDER QTY
61	0	08/30/88	08	1	0	1	9			9.00	3
SY	8	08/30/88	08	1	0	0	9			9.00	0

TYPE IN NEXT STOCK CODE OR CLEAR TO TERMINATE

MS05 FMT 1050222.T HI PF2 FOR HELP ENTERING MATERIAL MASTER FILE DATA
PRESS ENTER FOR DESC TO PURCH, PF1 IF DONE

SUBSTITUTE ITEM
PRIMARY COMPONENT 33EC0150 11/15/88
UOI DR
ITEM COMPONENT CODE
MANF PART NO LINE 01
NOUN LINE 02 CHROMATE
ADJECTIVE 1 LINE 03 NALCO 8320
ADJ 2 - TYPE LINE 04 IN 30 GALLON DRUMS
ADJ 3 - STYLE LINE 05
ADJ 4 - SPEC COND LINE 06 425 POUND EQUAL 30 GALLON DRUM
SIZE LINE 07
SPEC - REFERENCE LINE 27
MASTER FILE DATA; INV-CAT: Y00 UNIT-ID: MAXIMUM-QTY: ABC-CODE:
ABBREV-DESC: CHROMATE, NALCO 8320 30 GALLON DR TAX CODE: N LT IND: CPU:

01 WHSE	SYS CODE	LEAD TIME	CRITICAL POINT	ORDER-PT OR MA-DTE	ORDER-QTY OR MA-QTY	WHSE-LOC OR MA-JOB	FOR-MA-TRAN ACTION	I-C	QUANTITY ON HAND
SY	8	008							9.00
61	0	008		1	3	CR-11-FL			9.00

SRP Memo

Date May 4, 1988

TO Superintendents

FROM Harold C. Voepel, Plant Manager, Navajo Generating Station

RE: **HAZARDOUS WASTE EMERGENCY CONTINGENCY PLAN**

As most of you are aware, federal and state regulations regarding the handling, storage, and disposition of hazardous waste are now an issue that must be addressed immediately.

Enclosed with this memo is a copy of the "Hazardous Waste Contingency Plan," dated May 1988. This must be inserted in Section 16 of the "Hazardous Waste" manual. Guidelines have been included with this memo to ensure compliance with the applicable state and federal regulations. Superintendents will see that all employees in their division are familiar with this plan to the extent necessary to assure personnel safety and compliance with regulations.

USER GROUPS:

Good hazardous waste management can be thought of as using "good housekeeping" practices such as:

1) Using and reusing materials as much as possible.
2) Recycling or reclaiming waste.
3) Treating waste to reduce its hazards.
4) Reducing the amount of waste you generate.

TO REDUCE THE AMOUNT YOU GENERATE:

1) Do not mix non-hazardous wastes with hazardous ones. For example: do not put non-hazardous cleaning agents or rags in the same container as a hazardous solvent or the entire contents becomes subject to the hazardous waste regulations. Non-hazardous solvent wastes Mirachem 100, and Poly Tech RK351, should not be disposed of at the hazardous waste accumulation areas. Non-hazardous solvent wastes should be placed in the oily waste sump or poured down the drain.

2) Avoid mixing several different hazardous wastes. Doing so may make recycling very difficult, if not impossible, or make disposal more expensive.

3) Avoid spills or leaks of hazardous products. (The materials used to clean up such spills or leaks also will become hazardous.)

4) Make sure the original containers of hazardous products are completely empty before you throw them away. Use all of the product.

ATTACHMENT 22

5) Avoid using more of a hazardous product than you need. For example, use no more solvent than you need to do the job. Also, do not throw away a container with unused solvent in it.

6) Lube oil shacks and the surrounding area should be kept clean. If the soil around the shack is oil soaked then provisions are to be made to clean the area.

7) Make sure that the material being used is labeled and identified. If numerous drums of a product are needed, section off a area and post a sign identifying the product and its intended use.

8) Accumulate the hazardous solvent and paint waste material until the end of the shift and then put it into the barrels at the Satellite Accumulation Stations. (Locations of the Satellite Stations are given on Map 1 of the Contingency Plan. Satellite Stations 1, 2, 4, and 5 are for hazardous waste solvent. Satellite area 3 is for paint waste.)

WAREHOUSING:

1) Warehousing will arrange for transport and disposal of hazardous waste; compile monthly reports for submittal to environmental services; develop tracking a system for generation, storage and disposal of hazardous waste.

2) Warehousing will also routinely inspect the plant site to ensure that the various user groups are in compliance with the state and federal regulations. The on-site facility representative will contact the foreman or supervisor involved to discuss the violation. It will be the foreman's or supervisor's responsibility to correct the discrepancy and keep his area in compliance.

Harold C. Voepel

cc: Assistant Plant Manager
Hazardous Waste Manual holders

NAVAJO GENERATING STATION
HAZARDOUS WASTE
EMERGENCY CONTINGENCY PLAN
MAY 1988

TABLE OF CONTENTS

I. Purpose 1

II. Scope 1

III. Location 1

IV. Emergency Procedures 1

V. Spill Response 4

VI. Emergency Team Notification 5

VII. Evacuation Procedures 7

VIII. Equipment 10

IX. Hazardous Waste Accumulation Areas.....18

X. Personnel Training 19

XI. Management Responsibility 20

XII. Dissemination 21

XIII. Effective Date 21

XIV. Amendments 21

XV. Map #1 (Print A-665-M776/1 Building Locations)

XVI. Attachments

I. PURPOSE

The purpose of this plan is to outline the procedures to be carried out by plant personnel in case of an emergency caused by the accidental release of hazardous waste.

This contingency plan meets the Environmental Protection Agency (EPA) requirements pursuant to 40 CFR 265, Subpart D, and the Arizona Department of Environmental Quality (DEQ) requirements pursuant to A.C.R.R. R9-8-1865.

II. SCOPE

The provisions of this plan must be carried out immediately by the Emergency Coordinator whenever there is a fire, explosion, or release of hazardous waste which could threaten human health or the environment. This plan is designed to minimize hazards to human health or the environment from fires, explosions, or any unplanned sudden or non-sudden release of hazardous waste to the air, soil or surface water.

III. LOCATION

The Navajo Generating Station is located five miles east of Page, Arizona on Highway 98.

IV. EMERGENCY PROCEDURES:

In the event of a hazardous waste emergency, the

person discovering the emergency will immediately phone the control room at extension 205/206/207, give the location of the emergency and describe what is needed. (For example: fire brigade, emergency medical vehicle, or E.M.T.) The Control Room Operator will notify the on duty Shift Supervisor. The Shift Supervisor on duty will be designated as the Emergency Coordinator. (See Attachment A for the current list of Emergency Coordinators.) The Emergency Coordinator will be responsible for coordinating all emergency response efforts. These responsibilities include the following:

A. Notify the necessary emergency response teams. (See section VI. for details.)

B. Activate internal alarms or communication systems to notify personnel.

C. Identify the character, exact source, amount and extent of any released material.

D. Notify the Superintendent of Support Services at extension 574, or home phone 645-2052.

E. Notify the Safety Coordinator at extension 227, or home phone 645-3890.

F. Notify the Security Supervisor at extension 578 or home phone 645-3159.

G. Notify the Hazardous Waste Facility Representative at Extension 537, or home phone 645-9506.

H. Notify the Plant Manager at extension 217, or home phone 645-3618.

I. Notify the appropriate State or local agencies, if needed.

J. Notify SRP Industrial Hygiene section and Environmental Services: (see Hazardous Waste Incident Form, Attachment C, for the names to be called in order listed.)

K. Assess possible hazards to human health or environment, and report findings to local authorities, as needed.

L. Take all reasonable measures to ensure that fires, explosions, and releases do not occur, recur, or spread. This may include stopping processes and operations.

M. If facility stops operations, monitor for leaks, pressure buildup, etc., whenever appropriate.

N. Must provide for treating, storing, or disposing of recovered waste and contaminated debris; and ensure that incompatible wastes

are separated, and emergency equipment is cleaned before operations resume.

O. Must notify the facility representative and appropriate local authorities before operations resume. The facility representative will notify Environmental Services. **ENVIRONMENTAL SERVICES WILL NOTIFY THE EPA.**

P. Note in operating record the details of any incident requiring the implementation of the contingency plan, and within 15 days notify the EPA in writing.

Q. Complete the Hazardous Waste Incident Report Form (Attachment C).

V. SPILL RESPONSE:

In the event of a spill the Emergency Coordinator will contact the Facility Representative. The Facility Representative, along with Industrial Hygiene and Environmental Services, will be responsible for determining the hazard and what degree of remedial action is necessary. The Facility Representative will ensure that the following procedure is followed:

A. Determine what was spilled and the hazards associated with the spill.

B. Supervise the containment and solidification of the material in a manner that minimizes the danger posed to personnel and the environment.

C. Ensure that the solidified material is placed in a 17 H drum that is properly labeled and then weighed before shipment to a disposal facility.

D. Coordinate the movement of the drum to the central accumulation area.

E. If the material spilled was not a hazardous waste, Industrial Hygiene will recommend the proper disposal of the material.

VI. EMERGENCY TEAM NOTIFICATION

In the event of a medical or fire emergency, the following procedure will be implemented:

A. The Control Room Operator, will notify the proper emergency group:

1. Using the plant paging system "Red phone" give voice instruction announcement. These alerts and announcements should be repeated three times. Examples of Emergency Notification are as follows:

MEDICAL EMERGENCY

"We have a medical emergency. EMTs report to the emergency scene." (Then give exact

location) On all medical emergencies, the Control Room Operator will advise an EMT with a radio to report to the medical emergency vehicle.

FIRE EMERGENCY

Reference: Fire Brigade Organization and Operating Procedures, date September 4, 1987. Attachment D.

"We have a fire emergency. Fire Brigade members should report to the scene." (Then give exact location). NOTE: All voice announcements will be repeated three times.

B. The Shift Supervisor or his designated representative will be responsible for notifying the following:

1. Plant Nurse
2. Safety Coordinator
3. Fire Specialist
4. Security Supervisor
5. Plant Manager
6. Assistant Plant Manager
7. Pertinent Supervisor
8. Others as deemed necessary

C. Additional Medical Emergency Vehicles:

If additional medical emergency vehicles are

needed, the EMTs will determine how many and request that the Control Operator call from the lists below in the order listed.

Medical Emergency Vehicles	# Available	Phone #
City of Page	2	645-911
U.S. National Park Service Helicopters	1	645-9585
Arizona Department of Public Safety		1-800-247-6337
SRP (Bill Hines)		work 81-2479
		home 838-3525

The Emergency Coordinator will notify NGS Management that additional medical emergency vehicles have been called. The Control Room Operator will notify the Main Gate Security Officer that additional medical emergency vehicles have been called and request that they provide an escort to lead the medical emergency vehicle to where it is needed.

VII. EVACUATION PROCEDURE

If evacuation becomes necessary, the following procedure is to be used:

A. Notification will be made over the Public

Address System using the "Red Phone" in the Control Room.

"This is an emergency evacuation please report to your assigned area." (NOTE: All voice announcements will be repeated three times.)

B. All personnel will evacuate all buildings and gather at their assigned areas, with the exception of:

   1. Fire Brigade, EMT Team and Nurse are to report to the Fire Station.

C. Assigned areas are as follows:

   1. Personnel assigned in the Power Block and Administration Building, will gather in the South parking lot, location A Map #1. The alternate gathering point will be visitors parking lot, location C Map #1.

   2. Coal Yard Operations and Maintenance, Heavy Equipment and Auto Shop will gather at Building #9 Heavy Equipment Shop Map #1. The alternate gathering point will be East of Heavy Equipment Shop location B Map #1.

   3. Water Treatment Operations and Maintenance Personnel, will gather immediately south of the Water Treatment Building, location D

Map #1. The alternate gathering point will be West of Service Building location E Map #1.

4. Main Warehouse Personnel, will gather north of the Warehouse location F Map #1. The alternate gathering point will be South parking lot location A Map #1.

5. Railroad personnel will report to the Building #1, Engine House, Map #1. Alternate gathering point will be South of Engine House location G Map #1.

6. The following Operations Personnel will remain at their duties: (Unit 1, 2 and 3)

Shift Supervisor	(1)
Assistant Shift Supervisor	(2)
Control Room Operator	(2)
Assistant Control Room Operator	(2)
Auxiliary Operator	(2)
Assistant Auxiliary Operator	(1)
Coal Control Asst. Shift Sup.	(1)
Fuel Handler - Coal Control	(1)

7. NOTE: During other than normal working hours, ALL personnel not assigned to remain on duty will report to the South parking lot,

location A, Map #1. The alternate gathering point will be location E, Map #1.

D. Supervisors will be responsible to account for their personnel in their assigned area, and will report results of personnel count to their immediate superiors. The results will be reported to the NGS Command Post (Extensions 205/206/207)

E. Personnel will remain at their assembly areas until released by the Plant Manager, Assistant Manager or Superintendent of Support Services.

F. Radio Transmissions shall be for essential use only.

VIII. EQUIPMENT:

The following is a list of the emergency equipment, its location and capabilities.

A. Plant Fire Protection:

1. Fire Truck, Building #14, Map #1. The fire truck has a 750 gallon water tank and a pump capable of delivering 1000 gallons per minute. The truck carries 2000 feet of 2 1/2 inch hose for supply or attack and 200 feet of red line for small fires, 1200 feet of 1-1/2" attack hose,

with 150 feet of 1-1/2" preconnect hose. The truck also carries a 250 pound dry chemical extinguisher that can be used on class B and C fires. A 40 gallon foam tank capable of discharging through any outlet on the truck is also available.

2. Fire Equipment Enclosures

   There are seven (7) fire equipment enclosures, (See Map #1 for locations) which contain the following fire fighting equipment. One portable foam cart which contains 30 gallons of foam and 200 feet of 1 1/2 inch hose. A hose cart containing 200 feet of 2 1/2 inch hose and assorted fittings.

3. Sprinklers

   Coal Handling equipment, Sandblast Building, Heavy Equipment Building, Main and Chemical Warehouse, Main and Auxiliary Transformers, the Lube Oil Reservoirs and Centrifuges, Hydrogen Oil Seal Tanks, Turbine Oil Filters, parts of the Service Building, and the Boiler front are protected by Fixed Sprinkler Systems.

4. Carbon Dioxide System

A fixed low pressure CO_2 system is provided for the Coal Silos, Pulverizers, the Dust Collectors and Separators in the Power Block. The CO_2 is provided from two 17 ton liquid tanks located East of the Power Block between Units #2 and #3. All systems, with the exception of the Silos and Pulverizers are operated automatically by Heat Activated Devices (H.A.D) with manual backup. An automatically operated with manual backup high pressure system protects the scalper dust collector.

5. Halon Extinguishing System:

   A fixed automatic 1301 system, with manual backup, protects the Relay Rooms, Computer Rooms, Communication Room, and Control boards in each Control Room. The Main Switch Gear Rooms are protected by an early warning system consisting of Photoelectric Smoke Detectors that alarm locally and in each unit control room. All important cable trays are protected by a wet pipe sprinkler system. Each unit has 35 hose cabinets containing from 100 feet to 200 feet of

1-1/2" inch hose and nozzles. Additional fire fighting hoses are located at each of the 48 Fire Hydrants showed on Map #1. Each cooling tower has an additional 800 feet of 1-1/2 inch hose in 4 cabinets located on each tower, 22 fixed sprinkler heads operated at ground level by manually operated valves.

6. Wall mounted fire extinguishers:

   There are approximately 750 wall mounted fire extinguishers located throughout the plant site. Each extinguisher has a label describing its appropriate use.

B. Medical Emergency Vehicle:

The NGS medical emergency vehicle, is located on the East side of Service building, (Building 14, Map #1) is capable of transporting two people to a medical facility. The vehicle is equipped as an ambulance except for emergency lights, siren and insignia.

C. Spill Containment Equipment:

Safe-T-sorb is kept in the warehouse. This absorbent is capable of containing and absorbing a spill to promote an expedient cleanup of the area.

D. Protective Clothing:

1. Rubber Suits:

   Complete rubber suits including head, hand, and foot protection are kept at the Maintenance Tool Room, between Unit #2 and 3, (Building 38 Map #1). The suits are suitable for use with self-contained breathing apparatus and should be used when severe health hazards are present.

2. Rubber Gloves:

   Rubber gloves are kept in the warehouse, Maintenance Tool Room, and in work areas throughout the plant.

3. Rubber Boots:

   Rubber boots are kept in the warehouse, Maintenance Tool Room, and in work areas throughout the plant.

4. Respirators:

   Personal respirators have been issued to all certified personnel whose job description indicates a need. The respirators use interchangeable cartridges to protect from different hazards such as organic vapors, acid fumes, particulates,

etc. The different cartridges for the respirators are available in the warehouse.

5. MSA Air Packs

The MSA Air Pack is a lightweight self-contained breathing apparatus (SCBA) rated to provide air for 30 minutes. The unit consists of a pressure tank, regulator, warning device, high pressure hose, and a face mask with a flexible hose. The locations of MSA Air Packs are given below:

A. Each Chlorine Building (2)

B. Railroad Tool Room (2)

C. Emergency Van NPG524 (2)

D. Maintenance Tool Room (4)

E. Fire Equipment Cabinets West Wall of Shifters Office (4)

F. Auxiliary Control Board, 0' Elevation, Unit 1 and 3 (2)

F. Fire Truck (4)

7. Face Shields:

Face Shields that attach to hard hats to protect the face from chemicals and other hazards are available in the warehouse and Maintenance Tool Room.

8. Goggles:

Goggles that provide protection for the eyes are available at the warehouse, Maintenance Tool Room, and plant laboratories.

E. Communication Systems:

1. Phone System

Phones are located throughout the facility. Each phone is capable of summoning assistance or to alert plant personnel to hazards.

2. Two way radios are carried by Operations, Safety, Medical, Fire Personnel and Maintenance Foremen and other personnel are assigned radios on an as needed basis.

F. Alarm Systems:

1. Fire Alarm

Flow through any one of the sprinkler systems activates the fire alarm in the appropriate area.

G. First Aid Station:

A first aid station is located in the Service Building. The facility is staffed by a nurse during normal working hours. This facility is capable of providing basic life support until

transportation to a medical facility can be arranged.

H. Stretchers:

There are stretchers located at all elevator landings in the power block.

I. Eye Wash Stations:

Eye wash and safety showers are capable of removing chemicals from an individual that has been involved in an accident. The stations are located at the following areas:

1. Water Lab
2. Environmental Lab
3. Fuel Lab
4. Units #1, #2 and #3 Brine Concentrators
5. Inside Water Treatment Building (2)
6. Acid Unloading Area
7. Acid Pumps at Units #1, #2 and #3 (Cooling Towers Acid Storage.)
8. West Side of Chlorine Building
9. Chemical Warehouse (1)
10. Acid Tanks by Auxiliary Boiler
11. Crystalizers
12. West Side of Condensers 0' elevation Power Block by Demineralizers.
13. Outside battery room in Relay Building

located in 230 KV yard.

14. Three portable Eye Wash Tanks are available for use in areas where there are no permanent fixtures.

IX. HAZARDOUS WASTE ACCUMULATION AREAS

The following is a description of the Satellite Accumulation areas and the central accumulation area at the Navajo Generating Station.

A. Description:

There are five (5) satellite accumulation areas and one central accumulation area. (See Map #1)

AREA	LOCATION
Central Accumulation Area	Location A1 map #1
Unit #2 and #3	Location S1 map #1
Railroad	Location S2 map #1
Sandblast Building	Location S3 map #1
Rebuild Shop	Location S4 map #1
Unit #1	Location S5 map #1

B. Maintenance:

The areas for accumulation of hazardous waste shall be maintained in a manner to minimize health hazards and environmental pollution. Each of the accumulation areas is posted with

the location of the nearest phone and the number to call in case of an emergency. Portable fire extinguishers are mounted near each accumulation area. These areas shall remain clear of fire and explosion hazards. The access to these areas shall remain free from obstruction to allow admission of emergency response teams. When the drums are not being used they shall be kept closed. Accumulation drums shall be moved to the central accumulation area within 72 hours of becoming full.

C. Area Inspections:

On Monday, Wednesday, and Friday the Facility Representative or his designee shall check all Satellite Accumulation areas and the central accumulation area. These inspections will determine if the regulations outlined previously are being followed. If a discrepancy is noticed the appropriate foreman shall be notified to have the problem corrected immediately.

X. PERSONNEL TRAINING

All Warehouse and Operation Personnel, involved with the handling or management of hazardous waste

shall be instructed on the applicable hazardous waste regulations. Also, the Emergency Coordinators shall receive additional training concerning the specific aspects of their duties. This training will be coordinated by the Hazardous Waste Facility Representative.

A. The Plant Manager shall be responsible for the training of all personnel involved with the handling and management of hazardous waste.

B. Training shall begin immediately upon the issuance of this plan and be reviewed once a year thereafter.

C. The Plant Manager shall cause all Satellite Accumulation areas, the central Accumulation area, and control equipment to be kept in good operating condition.

D. The Hazardous Waste Facility Representative shall coordinate the training session that will be conducted annually with each supervisor and work group.

XI. MANAGEMENT RESPONSIBILITY

Should a hazardous waste release occur, the Plant Manager, Shift Supervisor, or Designated Representative shall deploy such manpower, equipment, and any other resources as may be

required, to minimize the risk to human health or the environment. Any waste shall be cleaned up and disposed of in an environmentally acceptable manner.

XII. DISSEMINATION:

A copy of this plan shall be kept on file by the Plant Manager who shall make the same available to appropriate government officials during any on-site review. A copy of this plan, and all pertinent documents, shall also be on file in the Support Services Division. The Hazardous Waste Facility Representative, Navajo Generating Station will coordinate future reviews and amendments.

XIII. EFFECTIVE DATE

This plan will be effective May 1, 1988.

XIV. AMENDMENTS

A. This plan shall be reviewed and amended whenever there is a change in facility design, construction, operation or maintenance which materially affects the facility's potential for a hazardous waste incident. Such amendments shall be fully implemented as soon as possible, but not later than six months after such change occurs.

B. The next scheduled review of this plan shall be completed by May 1, 1989.

Recommended: N C Voegel Date:
Plant Manager

Approved: John C. Lieb Date: April 26, 1988
Assistant General Manager, Power Operations

ATTACHMENT A

SALT RIVER PROJECT
NAVAJO GENERATING STATION
EMERGENCY COORDINATORS

NAME	TITLE	PHONE work/home
Mike Hindmarsh	Shift Supervisor	213/214 645-9598
Lamont Haycock	Shift Supervisor	213/214 645-9259
George Moorehead	Shift Supervisor	213/214 645-2728
Joe Castro	Shift Supervisor	213/214 645-3866
Frank Slater	Shift Supervisor	213/214 645-3486
Robert Talbot	Shift Supervisor	213/214 645-3154

ATTACHMENT B

NAVAJO GENERATING STATION
HAZARDOUS WASTE
REPRESENTATIVE

Contact the site representative in the order listed below.

	OFFICE	HOME
FACILITY REPRESENTATIVE,..... RON F. CHAPMAN	537	(602) 645-9506
REGIONAL COORDINATOR,..... JERRE BLECHA	574	(602) 645-2052

ATTACHMENT C

HAZARDOUS WASTE INCIDENT REPORT FORM

1. Name of facility:

2. Name of person discovering incident:

3. Description of event:

   (a) Facilities or equipment involved:

   (b) Estimated quantity of waste involved

   (c) Action being taken:

4. Notify one of the following:

SRP INDUSTRIAL HYGIENE SECTION

		Office	Home (1)
(1)	Bob Hutzel	(602) 236-8024	759-0235
(2)	Jim Davidson	(602) 236-8026	827-8472

SRP ENVIRONMENTAL SERVICES DEPARTMENT

		Office	Home
(1)	Greg Witherspoon	(602) 236-2717	(602) 952-1675
(2)	Nils Larson	(602) 236-2023	(602) 246-1259
(3)	Frank Darmiento	(602) 236-2618	(602) 948-0928

ATTACHMENT D

SRP Memo

Date September 4, 1987

TO All Personnel

FROM H. C. Voepel, Manager, Navajo Generating Station

RE: Fire Brigade Organization and Operating Procedures

(Supersedes Memorandum Written June 11, 1987)

1. Purpose:

To provide a procedure to be followed for any fire emergency for the Navajo Fire Brigade in order to protect employees and property from fire and ensure continuity of operation.

2. Standards:

OSHA Regulation, 29CFR Part 1910, Subpart L. 1910.156 Fire Brigades, sets minimum standards for organizing, personnel fitness, training and education, protective clothing and respiratory protective device requirements. These standards will be met at Navajo Generating Station.

3. Responsibility:

The Fire Specialist shall:

A. Develop the planning, policies and procedures to organize a properly trained fire brigade.

B. Conduct training and demonstrations for training in fire suppression techniques.

C. Coordinate with supervisors in Maintenance and Operations for training with minimal interruption of work.

D. Periodically evaluate equipment provided for fire suppression. He shall be responsible for setting in motion necessary procedures for replacing missing, or correction of inoperative equipment and make recommendation to the Superintendent of Support Services for new equipment as needed. He shall also call to the immediate attention of the Superintendent of Support Services any situation likely to reduce the effectiveness of fire suppression operations.

E. Conduct a complete investigation of the fire scene and submit a written report, detailing scope and findings of the investigation, including appropriate

recommendations. Report should also include special forms and information as required by SPB 7-45-21.

4. Participation:

A. Personnel: Brigade will consist of shift operations personnel, an electrician and others as recommended by the Fire Specialist and approved by Management. In case of a major fire, other trained plant personnel will be used to supplement the fire brigade as necessary.

B. Members shall be physically capable of performing duties which may be assigned to them during emergencies in accordance with OSHA 1910.156 (b)(2). These duties may include, but are not limited to, those specified in paragraph six of this organizational statement.

C. Employees with known heart disease, epilepsy, or emphysema shall not be permitted to participate in fire brigade emergency activities unless a physician's certificate of the employee's fitness to participate in such activities is provided.

5. Training:

A. The Fire Specialist shall provide brigade members with training and educational opportunities commensurate with those duties and functions that the brigade members are expected to perform.

B. Brigade members shall be required to complete a specified program of instruction outlined in paragraph six of this organizational statement as a condition of membership in the brigade.

C. The Navajo Fire Brigade Training Manual, as revised April 16, 1982, and OSHA 1910.156 (2)(c) will be used as a guideline for brigade training.

6. Function:

The Navajo Fire Brigade is organized to perform the following functions:

A. Control and extinguishment of incipient stage exterior fires.

B. Control and extinguishment of incipient stage interior structural fires.

C. Control and extinguishment of fires or spills involving flammable liquids.

D. Assist in guidance of employees during emergency evacuations.

E. Assist local emergency response units when such units respond to plant emergency.

7. Fire Brigade Members and Duties:

A. Each shift will have the following teams formed.

1) Fire Chief (Assistant Shift Supervisor)
2) #1 Nozzleman
3) #1 Hoseman
4) #1 Plugman
5) #2 Nozzleman
6) #2 Hoseman
7) #2 Plugman
8) Electrician
9) Other assignments as recommended by the Fire Specialist and approved by Management.

B. Fire Chief:

1) Periodic review of his team roster to ensure that it is adequately staffed.

2) Assist Fire Specialist in preparing the training program and scheduling of training for his team.

3) Keep the Fire Specialist informed of any discrepancies of fire protection equipment.

4) Assume the Fire Specialist's duties, during a fire emergency, when the Fire Specialist is off the plant site. The Fire Specialist will be in charge of all fire suppression activities when on plant site.

C. Shift Supervisor:

(Or his designated representative) will have the following responsibilities upon notification of a fire emergency.

1) Maintain an effective line of communication throughout the fire emergency.

2) Notify the fire brigade over the public address system using the "Red Phone" in the control room. Contact the Fire Specialist or Fire Chief by radio, and relay all known information.

3) Notify the Fire Specialist, Plant Manager, Assistant Manager, Superintendent of Operations,

and Superintendent of Support Services. The Shift Supervisor will preserve the fire scene by preventing maintenance or clean-up work until the Fire Specialist has completed his investigation. In the event the Fire Specialist is unavailable the appropriate personnel in the chain of command will, with the input of the Shift Supervisor, determine the appropriate action. The Safety Coordinator and Nurse should be notified as necessary.

4) Notify Security (Extension 521) and inform them of the location of the fire. If the City of Page Fire Department has been summoned, Security shall be notified to escort them to the scene.

5) Maintain a chronological record of events as they happen, from the fires inception until it has been extinguished.

6) Each Maintenance shift foreman will designate members of his crew as alternate members of the fire brigade. They will participate in normal fire training.

8. Security:

In the event of a fire emergency, the Shift Supervisor will notify the main gate security (Extension 521) and inform the guard of the location of the fire. If the Page Fire Department has been called, the guard will notify the security sergeant, who will assign a guard to direct the Page fire truck to the scene. The security guard will notify the Fire Specialist, or in his absence, the Fire Chief, of his arrival at the location of the fire and make himself available as directed by the Fire Specialist, or in his absence, the Fire Chief.

H C Voepel

H. C. Voepel

JB/HCV/DRR/lmb

xc: ALL PROCEDURE BOOKS (FIRE)
ALL PERSONNEL

JRB3/073

MAP # 1

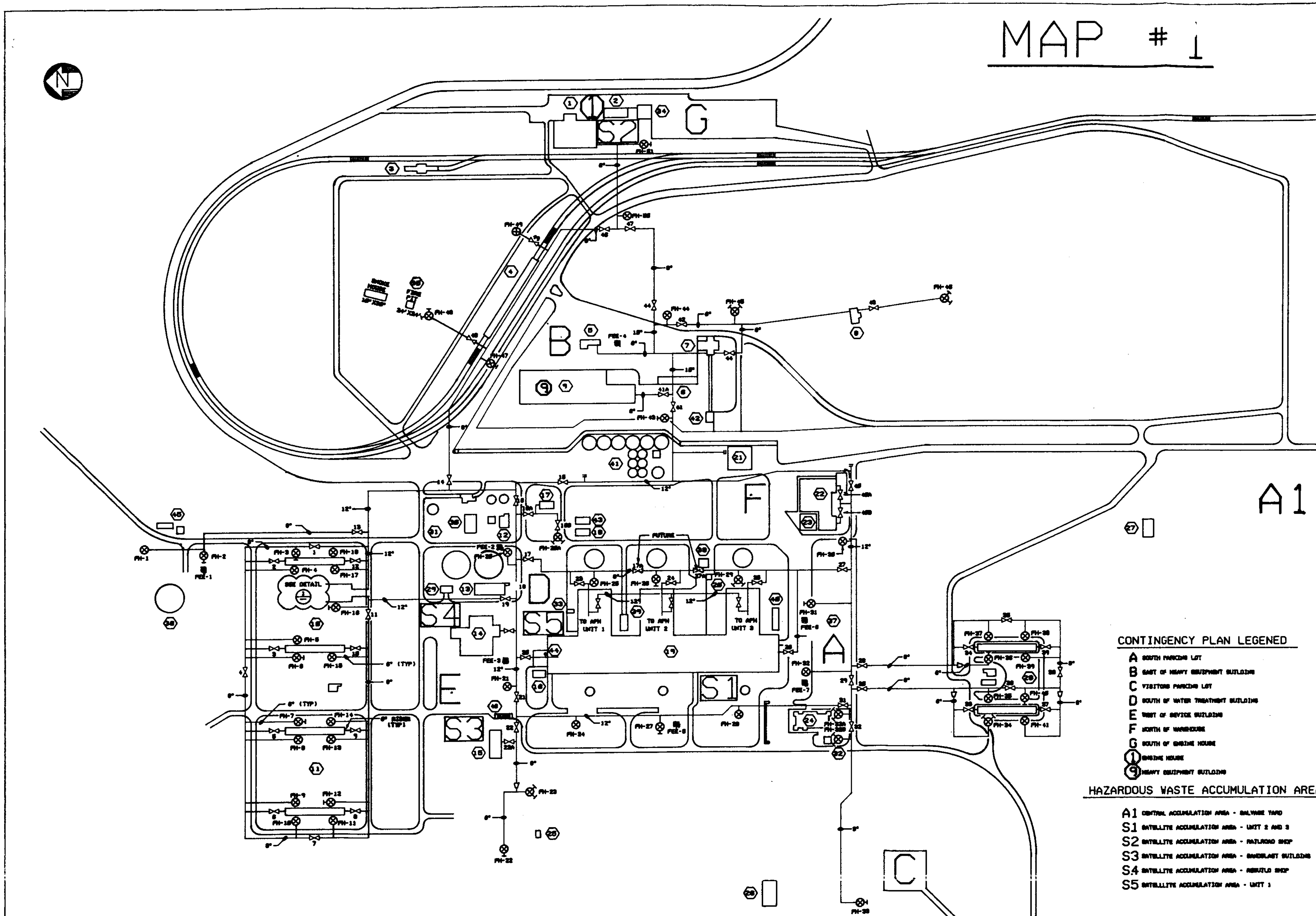

LEGEND

1. ENGINE HOUSE
2. RAILROAD MAINTENANCE SHOPS
3. TRUING SHOP
4. UNLOADING HOPPERS
5. NORTH TRANSFER TOWER
6. COAL CONTROL BUILDING
7. COAL SAMPLING BUILDING
8. SOUTH TRANSFER TOWER
9. HEAVY EQUIPMENT GARAGE
10. UNIT 1 COOLING TOWER AREA
11. UNIT 2 COOLING TOWER AREA
12. BRINE CONCENTRATOR BUILDING (RCC 1)
13. WATER TREATMENT BUILDING
14. SERVICE BUILDING
15. SANDBLAST BUILDING
16. AMERTAP CONTROL BUILDING
17. CHEMICAL WAREHOUSE
18. ELECTRIC SHOPS
19. POWER BLOCK
20. ACID, CAUSTIC & AMMONIA STORAGE
21. PIPE FABRICATION SHOP
22. WAREHOUSE & SHOPS
23. COMMUNICATION SHOP
24. ADMINISTRATION BUILDING
25. 230KV YARD CONTROL HOUSE
26. 500KV YARD CONTROL HOUSE (A.P.S.)
27. INSULATION WAREHOUSE
28. UNIT 3 COOLING TOWER AREA
29. CENTRIFUGE BUILDING
30. BRINE CONCENTRATOR (RCC 2 & 3)
31. CONDENSATE STORAGE TANK
32. GUARD HOUSE
33. NITROGEN OFF-LOADING BUILDING
34. RAILROAD DISPATCH OFFICE
35. FIRE SCHOOL PIT
36. FUEL OIL TANK
37. EMPLOYEE PARKING AREA
38. TOOL ROOM
39. ELEC. SWITCH GEAR
40. ELEC. SWITCH GEAR
41. ASH TANKS
42. CRYSTALLIZER BLDG.
43. BOTTOM ASH SHOP
44. POWER BLOCK ADDITION
45. WASTE OIL TANK & SUMP
46. HYDROGEN STORAGE AREA

- VALVE
- FIRE HYDRANT (4 1/2" STEAMERS)
- FIRE HYDRANT (4" STEAMERS)
- FIRE HYDRANT (NO STEAMERS)
- FIRE EQUIPMENT ENCLOSURE (FEE-#)

CONTINGENCY PLAN LEGENED

- A SOUTH PARKING LOT
- B EAST OF HEAVY EQUIPMENT BUILDING
- C VISITORS PARKING LOT
- D SOUTH OF WATER TREATMENT BUILDING
- E WEST OF SERVICE BUILDING
- F NORTH OF WAREHOUSE
- G SOUTH OF ENGINE HOUSE
- 1 ENGINE HOUSE
- 9 HEAVY EQUIPMENT BUILDING

HAZARDOUS WASTE ACCUMULATION AREA

- A1 CENTRAL ACCUMULATION AREA - SALVAGE YARD
- S1 SATELLITE ACCUMULATION AREA - UNIT 2 AND 3
- S2 SATELLITE ACCUMULATION AREA - RAILROAD SHOP
- S3 SATELLITE ACCUMULATION AREA - SANDBLAST BUILDING
- S4 SATELLITE ACCUMULATION AREA - REBUILD SHOP
- S5 SATELLITE ACCUMULATION AREA - UNIT 1

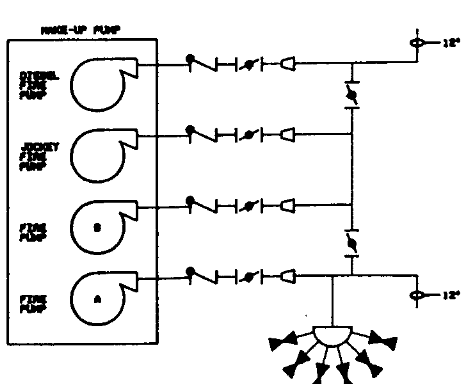

DETAIL 1
N.T.S.

SCHEDULE OF P.I.V.'S BY COORDINATE

NO.	DESCRIPTIVE LOCATION	NORTH	EAST	NO.	DESCRIPTIVE LOCATION	NORTH	EAST
1	EAST COOLING TOWER 1B	[illegible]	[illegible]	24	EAST SIDE OF UNIT 2 BOILER AREA	[illegible]	[illegible]
2	NORTH COOLING TOWER 1B	N74+21	[illegible]	25	EAST SIDE OF UNIT 3 BOILER AREA	[illegible]	[illegible]
3	NORTH COOLING TOWER 1A	[illegible]	[illegible]	26	SOUTH END OF UNIT 3 POWER BLOCK	[illegible]	[illegible]
4	NORTH BETWEEN COOLING TOWERS 1A & 2B	[illegible]	[illegible]	27	SOUTH WEST CORNER OF WAREHOUSE PARKING LOT	[illegible]	[illegible]
5	NORTH COOLING TOWER 2B	N74+34	[illegible]	27A	BETWEEN U3 & TOOL ROOM (FUTURE)	[illegible]	[illegible]
6	NORTH COOLING TOWER 2A	[illegible]	[illegible]	28	SOUTH SIDE OF MAIN PARKING LOT	[illegible]	[illegible]
7	WEST CENTER OF COOLING TOWER 2A	[illegible]	[illegible]	29	MIDDLE OF MAIN PARKING LOT	[illegible]	[illegible]
8	SOUTH COOLING TOWER 2A	[illegible]	[illegible]	30	ENTRANCE OF MAIN PARKING LOT	[illegible]	[illegible]
9	SOUTH COOLING TOWER 2B	N76+14	[illegible]	31	EAST SIDE OF ADMINISTRATION BUILDING	[illegible]	[illegible]
10	SOUTH COOLING TOWER 1A	N76+11	[illegible]	32	SOUTH SIDE OF ADMINISTRATION BUILDING	[illegible]	[illegible]
11	COOLING TOWER ROAD SOUTH 1B	[illegible]	[illegible]	33	NORTH COOLING TOWER 3A	[illegible]	[illegible]
12	SOUTH COOLING TOWER 1B	[illegible]	[illegible]	34	NORTH COOLING TOWER 3B	[illegible]	[illegible]
13	ALONG SIDE P.I.V. 14	[illegible]	[illegible]	35	EAST COOLING TOWER 3B	[illegible]	[illegible]
14	ASH HAUL & COOLING TOWER ROAD	[illegible]	[illegible]	36	BETWEEN COOLING TOWERS 3A & 3B	[illegible]	[illegible]
15	ASH HAUL ROAD NORTH OF DEWATERING BINS	[illegible]	[illegible]	37	SOUTH COOLING TOWER 3A	[illegible]	[illegible]
16	NORTH PLANT ROAD AT BRINE CONCENTRATOR	[illegible]	[illegible]	38	SOUTH OF COOLING TOWERS 3A & 3B	[illegible]	[illegible]
16A	WEST SIDE OF CHEMICAL WAREHOUSE	[illegible]	[illegible]	39	SOUTH OF COOLING TOWER 3B	[illegible]	[illegible]
16B	NORTH WALL OF CHEMICAL WAREHOUSE	[illegible]	[illegible]	40	[illegible] OF WAREHOUSE	[illegible]	[illegible]
17	NORTH PLANT ROAD AT EAST PLANT ROAD	[illegible]	[illegible]	40A	SOUTH WALL OF WAREHOUSE	[illegible]	[illegible]
17A	WEST OF U3 "A" ID FAN (FUTURE)	[illegible]	[illegible]	40B	SOUTH WALL OF WAREHOUSE	[illegible]	[illegible]
18	NORTH PLANT ROAD AT	[illegible]	[illegible]	41	SOUTH SIDE OF ASH DEWATERING BINS	[illegible]	[illegible]
19	WATER TREATMENT ROAD AT NORTH PLANT ROAD	[illegible]	[illegible]	41A	SOUTH OF HEAVY EQUIPMENT BUILDING	[illegible]	[illegible]
20	NORTH PLANT ROAD SOUTH OF SERVICE BUILDING	[illegible]	[illegible]	42	EAST OF COAL TRANSFER BUILDING	[illegible]	[illegible]
21	NORTH PLANT ROAD AT SANDBLAST ROAD	[illegible]	[illegible]	43	EAST SIDE OF STACKER-RECLAIMER TRACK	[illegible]	[illegible]
21A	SOUTH WALL OF MACHINE SHOP AT SERVICE BLDG	[illegible]	[illegible]	44	NORTH SIDE OF COAL PILE	[illegible]	[illegible]

REF DWGS

FIRE EQUIPMENT ENCLOSURES .... A-[illegible]-A1[illegible]
YARD FIRE PROTECTION DETAILS .... A-[illegible]-C178

NOTES

1. FOR FIRE PROTECTION DETAILS SEE DWG. C178.
2. FIRE EQUIPMENT ENCLOSURE (FEE) DETAILS ARE SHOWN ON DWG. A1[illegible].
3. LOW SILHOUETTE HYDRANT HOUSES FURNISHED ON B/M [N-[illegible]]
4. FIRE HYDRANTS, VALVES & INDICATOR POSTS FURNISHED ON B/M [N-[illegible]], EXCEPT FOR MATERIALS THAT ARE FIELD FURNISHED.

ADDED FH48, AV48 AND SMOKE HOUSE, FIRE PIT								
3	[illegible]	[illegible]/97		[illegible]				
REVISED PER GENERATION DRAFTING.								
2	[illegible]	[illegible]		[illegible]				
ADDED EVACUATION LOCATIONS AND NO. 48								
1	[illegible]	[illegible]	[illegible] DFTG	RDL				
REV NO	JOB/LOG NO	DATE	DSGN ENGR	DFTR	CHKR	ENGR CHK	SUPV APPD	ISSUE AUTH

NAVAJO GENERATING STATION

WATER ◆ POWER — PHOENIX, ARIZONA

FIRE PROTECTION SYSTEM
EVACUATION AND
EQUIPMENT LOCATION
PLAN

by preparing a color comparison blank containing 2.0 mL NaOH solution, 0.2 g solid indicator mixture (or 1 to 2 drops if a solution is used), and sufficient standard EDTA titrant (0.05 to 0.10 mL) to produce an unchanging color.

2) *Eriochrome Blue Black R indicator;* Prepare a stable form of the indicator by grinding together in a mortar 200 mg powdered dye and 100 g solid NaCl to 40 to 50 mesh. Store in a tightly stoppered bottle. Use 0.2 g of ground mixture for the titration in the same manner as murexide indicator. During titration the color changes from red through purple to bluish purple to a pure blue with no trace of reddish or purple tint. The pH of some (not all) waters must be raised to 14 (rather than 12 to 13) by the use of 8*N* NaOH to get a good color change.

c. Standard EDTA titrant, 0.01M: Prepare standard EDTA titrant as described for the EDTA total-hardness method (Section 314). Standard EDTA titrant, 0.0100*M*, is equivalent to 400.8 μg Ca/1.00 mL.

3. Procedure

a. Pretreatment of polluted water and wastewater samples: Follow the procedure described in Section 302D or G.

b. Sample preparation: Because of the high pH used in this procedure, titrate immediately after adding alkali and indicator. Use 50.0 mL sample, or a smaller portion diluted to 50 mL so that the calcium content is about 5 to 10 mg. Analyze hard waters with alkalinity higher than 300 mg $CaCO_3$/L by taking a smaller portion and diluting to 50 mL, or by neutralizing the alkalinity with acid, boiling 1 min, and cooling before beginning the titration.

c. Titration: Add 2.0 mL NaOH solution or a volume sufficient to produce a pH of 12 to 13. Stir. Add 0.1 to 0.2 g indicator mixture selected (or 1 to 2 drops if a solution is used). Add EDTA titrant slowly, with continuous stirring to the proper end point. When using murexide, check end point by adding 1 to 2 drops of titrant in excess to make certain that no further color change occurs.

4. Calculation

$$\text{mg Ca/L} = \frac{A \times B \times 400.8}{\text{mL sample}}$$

Calcium hardness as mg $CaCO_3$/L

$$= \frac{A \times B \times 1{,}000}{\text{mL sample}}$$

where:

A = mL titrant for sample and
B = mg $CaCO_3$ equivalent to 1.00 mL EDTA titrant at the calcium indicator end point.

5. Precision and Accuracy

A synthetic sample containing 108 mg Ca/L, 82 mg Mg/L, 3.1 mg K/L, 19.9 mg Na/L, 241 mg chloride/L, 1.1 mg NO_3^--N/L, 0.25 mg NO_2^--N/L, 259 mg sulfate/L, and 42.5 mg total alkalinity/L (contributed by $NaHCO_3$) in distilled water was analyzed in 44 laboratories by the EDTA titrimetric method, with a relative standard deviation of 9.2% and a relative error of 1.9%.

311 D. Bibliography

Permanganate Titrimetric Methods

KOLTHOFF, I.M., E.J. MEEHAN, E.B. SANDELL & S. BRUCKENSTEIN. 1969. Quantitative Chemical Analysis, 4th ed. Macmillan Co., New York, N.Y.

EDTA Titrimetric Method

DIEHL, H. & J.L. ELLINGBOE. 1956. Indicator for titration of calcium in the presence of magnesium using disodium dihydrogen ethylenediamine tetraacetate. *Anal. Chem.* 28:882.

PATTON, J. & W. REEDER. 1956. New indicator

for titration of enedinitrilo) tetr 28:1026.

HILDEBRAND, G.P. & New indicator for of calcium in the *Anal. Chem.* 29:258.

SCHWARZENBACH, G. 1957. Complexometric Titrations. Interscience Publishers, New York, N.Y.

ATTACHMENT 24

56:121.

312 CHROMIUM

The hexavalent chromium concentration of U.S. drinking waters has been reported to vary between 3 and 40 μg/L with a mean of 3.2 μg/L. Chromium salts are used extensively in industrial processes and may enter a water supply through the discharge of wastes. Chromate compounds frequently are added to cooling water for corrosion control. Chromium may exist in water supplies in both the hexavalent and the trivalent state although the trivalent form rarely occurs in potable water.

1. Selection of Method

Use the colorimetric method for the determination of hexavalent chromium in a natural or treated water intended to b table. Use the atomic absorption sp photometric and colorimetric metho the determination of total chromi water and wastewater.

2. Sample Handling

If only the dissolved metal content sired, filter sample through a 0.4 membrane filter at the time of colle After filtration acidify filtrate with nitric acid (HNO_3) to pH <2. If th chromium content is desired, acidify tered sample at time of collectio conc HNO_3 to pH <2.

312 A. Atomic Absorption Method for Total Chromium

See Section 303A and B.

312 B. Colorimetric Method

1. General Discussion

a. Principle: This procedure measures only hexavalent chromium. Therefore, to determine total chromium, convert all the chromium to the hexavalent state by oxidation with potassium permanganate. The hexavalent chromium is determine imetrically by reaction with di carbazide in acid solution. A re color of unknown composition duced. The reaction is very sensit molar absorptivity based on ch

being about 40,000 L g^{-1} cm^{-1} at 540 nm. To determine total chronium, digest the sample with a sulfuric-nitric acid mixture and then oxidize with potassium permanganate before reacting with the diphenylcarbazide.

b. Interferences: The reaction with diphenylcarbazide is nearly specific for chromium. Hexavalent molybdenum and mercury salts will react to form color with the reagent but the intensities are much lower than that for chromium at the speci- d pH. Concentrations of molybdenum and mercury up to 200 mg/L can be tolerated. Vanadium interferes strongly but concentrations up to 10 times that of chromium will not cause trouble. Potential interference from permanganate is eliminated by prior reduction with azide. Iron in concentrations greater than 1 mg/L may produce a yellow color but the ferric ion color is not strong and no difficulty is encountered normally if the absorbance is measured photometrically at the appropriate wavelength. Interfering amounts of molydenum, vanadium, iron, and copper can be removed by extraction of the cupferrates of these metals into chloroform ($CHCl_3$). A procedure for this extraction is provided but should not be used unless necessary, because residual cupferron and $CHCl_3$ in the aqueous solution complicate the later oxidation. Therefore, the extraction is followed by additional treatment with acid fuming in order to decompose these compounds.

2. Apparatus

a. Colorimetric equipment: One of the following is required:

1) *Spectrophotometer,* for use at 540 nm, with a light path of 1 cm or longer.

2) *Filter photometer,* providing a light path of 1 cm or longer and equipped with a greenish yellow filter having maximum transmittance near 540 nm.

b. Separatory funnels, 125-mL, Squibb form, with glass or TFE stopcock and stopper.

3. Reagents

Use redistilled water to prepare reagents.

a. Stock chromium solution: Dissolve 141.4 mg $K_2Cr_2O_7$ in water and dilute to 1,000 mL; 1.00 mL = 50.0 μg Cr.

b. Standard chromium solution: Dilute 10.0 mL stock chromium solution to 100 mL; 1.00 mL = 5.00 μg Cr.

c. Nitric acid, HNO_3, conc.

d. Sulfuric acid, H_2SO_4, 1 + 1.

e. Methyl orange indicator solution.

f. Hydrogen peroxide, H_2O_2, 30%.

g. Redistilled water: Distilled water redistilled in all-glass apparatus.

h. Ammonium hydroxide, NH_4OH, conc.

i. Potassium permanganate solution: Dissolve 4 g $KMnO_4$ in 100 mL water.

j. Sodium azide solution: Dissolve 0.5 g NaN_3 in 100 mL water.

k. Diphenylcarbazide solution: Dissolve 250 mg 1,5-diphenylcarbazide (1,5-diphenylcarbohydrazide) in 50 mL acetone. Store in a brown bottle. Discard when solution becomes discolored.

l. Chloroform, $CHCl_3$: Avoid or redistill material that comes in containers with metal or metal-lined caps.

m. Cupferron solution: Dissolve 5 g $C_6H_5N(NO)ONH_4$ in 95 mL water.

n. Phosphoric acid, H_3PO_4, conc.

o. Sulfuric acid, H_2SO_4, 0.2*N*: Dilute 17 mL 6*N* H_2SO_4 to 500 mL with water.

4. Procedure

a. Preparation of calibration curve: To compensate for possible slight losses of chromium during digestion or other analytical operations, treat chromium standards by the same procedure as the sample. Accordingly, pipet measured volumes of standard chromium solution (5

μg/mL) ranging from 2.00 to 20.0 mL, to give standards for 10 to 100 μg Cr, into 250-mL beakers or conical flasks. Depending on pretreatment used in ¶ *b* below, proceed with subsequent treatment of standards as if they were samples, also carrying out cupferron treatment of standards if this is required for samples.

Develop color as for samples, transfer a suitable portion of each colored solution to a 1-cm absorption cell, and measure absorbance at 540 nm. As reference, use distilled water. Correct absorbance readings of standards by subtracting absorbance of a reagent blank carried through the method.

Construct a calibration curve by plotting corrected absorbance values against micrograms chromium in 102 mL final volume.

b. Treatment of sample: If sample has been filtered and acidified and only hexavalent chromium is desired, proceed to ¶ 4*e*. If total dissolved chromium is desired and there are interfering amounts of molybdenum, vanadium, copper, or iron present, proceed to ¶ 4*c*. If interferences are not present, proceed to ¶ 4*d*. If sample is unfiltered and total chromium is desired, digest with HNO_3 and H_2SO_4 as in Section 302E. If interferences are present, proceed to ¶s 4*c*, 4*d*, and 4*e*. If there are no interferences, proceed to ¶s 4*d* and 4*e*.

c. Removal of molybdenum, vanadium, iron, and copper with cupferron: Pipet a portion of digested sample containing 10 to 100 μg chromium into a 125-mL separatory funnel. Dilute to about 40 mL with distilled water and chill in an ice bath. Add 5 mL ice-cold cupferron solution, shake well, and let stand in ice bath for 1 min. Extract in separatory funnel with three successive 5-mL portions of $CHCl_3$; shake each portion thoroughly with aqueous solution, let layers separate, and withdraw and discard $CHCl_3$ extract. Transfer extracted aqueous solution to a 125-mL conical flask. Wash separatory funnel with a small amount of distilled water and wash water to flask. Boil for about 5 to volatilize $CHCl_3$ and cool. Add 5 HNO_3 and sufficient H_2SO_4 to have ab 3 mL present. Boil samples to the app ance of SO_3 fumes. Cool slightly, caref add 5 mL HNO_3, and again boil to fu to complete decomposition of orga matter. Cool, wash sides of flask, and once more to SO_3 fumes to eliminate HNO_3. Cool and add 25 mL water.

d. Oxidation of trivalent chromium: pet a portion of digested sample with without interferences removed, and c taining 10 to 100 μg chromium, into a mL conical flask. Using methyl orange indicator, add conc NH_4OH until solut is just basic to methyl orange. Add 1 H_2SO_4 dropwise until it is acidic, plu mL (20 drops) in excess. Adjust volum about 40 mL, add a boiling chip, and h to boiling. Add 2 drops $KMnO_4$ solutio give a dark red color. If fading occurs, $KMnO_4$ dropwise to maintain an exces about 2 drops. Boil for 2 min longer. A mL NaN_3 solution and continue boi gently. If red color does not fade c pletely after boiling for approximately sec, add another 1 mL NaN_3 solut Continue boiling for 1 min after color faded completely, then cool. Add 0.25 (5 drops) H_3PO_4.

e. Color development and meas ment: Use 0.2*N* H_2SO_4 and a pH met adjust solution to pH 1.0 ± 0.3. Tran solution to a 100-mL volumetric flask lute to 100 mL, and mix. Add 2.0 m phenylcarbazide solution, mix, an stand 5 to 10 min for full color dev ment. Transfer an appropriate portion 1-cm absorption cell and measure its sorbance at 540 nm. Use distilled wat reference. Correct absorbance readi sample by subtracting absorbance blank carried through the method (see note below). From the corrected ab ance, determine micrograms chror

present by reference to the calibration curve.

NOTE: If the solution is turbid after dilution to 100 mL in ¶ *e* above, take an absorbance reading before adding carbazide reagent and correct absorbance reading of final colored solution by subtracting the absorbance measured previously.

5. Calculation

$$\text{mg Cr/L} = \frac{\mu\text{g Cr (in 102 mL final volume)}}{A \times B} \times 100$$

where:

A = mL original sample, and
B = mL portion from 100 mL digested sample.

6. Precision and Accuracy

The dissolved (trivalent plus hexavalent) chromium was determined in 31 laboratories in a synthetic sample containing 110 μg Cr/L, 500 μg Al/L, 50 μg Cd/L, 470 μg Ca/L, 300 μg Fe/L, 70 μg Pb/L, 120 μg Mn/L, 150 μg Ag/L, and 650 μg Zn/L in distilled water. The relative standard deviation was 47.8% and the relative error 16.3%.

7. Bibliography

ROWLAND, G.P., JR. 1939. Photoelectric colorimetry—Optical study of permanganate ion and of chromium-diphenylcarbazide system. *Anal. Chem.* 11:442.

SALTZMAN, B.E. 1952. Microdetermination of chromium with diphenylcarbazide by permanganate oxidation. *Anal. Chem.* 24:1016.

URONE, P.F. 1955. Stability of colorimetric reagent for chromium, 5-diphenylcarbazide, in various solvents. *Anal. Chem.* 27:1354.

ALLEN, T.L. 1958. Microdetermination of chromium with 1,5-diphenylcarbohydrazide. *Anal. Chem.* 30:447.

SANDELL, E.B. 1959. Colorimetric Determination of Traces of Metals, 3rd ed. Interscience Publishers, New York, N.Y.

313 COPPER

Copper salts are used in water supply systems to control biological growths in reservoirs and distribution pipes and to catalyze the oxidation of manganese. Corrosion of copper-containing alloys in pipe fittings may introduce measurable amounts of copper into the water in a pipe system.

Copper is essential to humans and the adult daily requirement has been estimated at 2.0 mg.

1. Selection of Method

The atomic absorption spectrophotometric and the neocuproine methods are recommended because of their freedom from interferences. The bathocuproine method may be used for potable waters.

2. Sampling and Storage

Copper ion tends to be adsorbed on the surface of sample containers. Therefore, analyze samples as soon as possible after collection. If storage is necessary, use 0.5 mL 1 + 1 HCl/100 mL sample to prevent this adsorption.

313 A. Atomic Absorption Spectrophotometric Method

See Section 303A and B.

313 B. Neocuproine Method

1. General Discussion

a. Principle: Cuprous ion in neutral or slightly acidic solution reacts with 2,9-dimethyl-1,10-phenanthroline (neocuproine) to form a complex in which 2 moles of neocuproine are bound by 1 mole of Cu^+ ion. The complex can be extracted by a number of organic solvents, including a chloroform-methanol ($CHCl_3$-CH_3OH) mixture, to give a yellow solution with a molar absorptivity of about 8,000 at 457 nm. The reaction is virtually specific for copper; the color follows Beer's law up to a concentration of 0.2 mg Cu/25 mL solvent; full color development is obtained when the pH of the aqueous solution is between 3 and 9; the color is stable in $CHCl_3$-CH_3OH for several days.

The sample is treated with hydroxylamine-hydrochloride to reduce cupric ions to cuprous ions. Sodium citrate is used to complex metallic ions that might precipitate when the pH is raised. The pH is adjusted to 4 to 6 with NH_4OH, a solution of neocuproine in methanol is added, and the resultant complex is extracted into $CHCl_3$. After dilution of the $CHCl_3$ to an exact volume with CH_3OH, the absorbance of the solution is measured at 457 nm.

b. Interference: Large amounts of chromium and tin may interfere. Avoid interference from chromium by adding sulfurous acid to reduce chromate and complex chromic ion. In the presence of much tin or excessive amounts of other oxidizing ions, use up to 20 mL additional hydroxylamine-hydrochloride solution.

Cyanide, sulfide, and organic matter interfere but can be removed by a digestion procedure.

c. Minimum detectable concentration: The minimum detectable concentration, corresponding to 0.01 absorbance or 98% transmittance, is 3 μg Cu when a 1-cm cell is used and 0.6 μg Cu when a 5-cm cell is used.

2. Apparatus

a. Colorimetric equipment—One of t following is required:

1) *Spectrophotometer*, for use at 4 nm, providing a light path of 1 cm or lo er.

2) *Filter photometer*, providing a li path of 1 cm or longer and equipped wit narrow-band violet filter having maxim transmittance in the range 450 to 460 n

b. Separatory funnels, 125-mL, Squ form, with glass or TFE stopcock a stopper.

3. Reagents

a. Redistilled water, copper-free: cause most ordinary distilled water c tains detectable amounts of copper, redistilled water, prepared by distillat of singly distilled water in a resistant-gl still, or distilled water passed through ion-exchange unit, to prepare all reage and dilutions.

b. Stock copper solution: To 200.0 polished electrolytic copper wire or fo a 250-mL conical flask, add 10 mL w and 5 mL conc HNO_3. After the reac has slowed, warm gently to complete solution of the copper and boil to e oxides of nitrogen, using precaution avoid loss of copper. Cool, add abou mL water, transfer quantitatively to a volumetric flask, and dilute to the m with water; 1 mL = 200 μg Cu.

c. Standard copper solution: Di 50.00 mL stock copper solution to 500 with water; 1.00 mL = 20.0 μg Cu.

d. Sulfuric acid, H_2SO_4, conc.

e. Hydroxylamine-hydrochloride tion: Dissolve 50 g $NH_2OH{\cdot}HCl$ in 45 water.

f. Sodium citrate solution: Dissolv g $Na_3C_6H_5O_7{\cdot}2H_2O$ in 400 mL water. 5 mL $NH_2OH{\cdot}HCl$ solution and 10 neocuproine reagent. Extract with 5

EPA

Test Methods for Evaluating Solid Waste

Volume IA: Laboratory Manual Physical/Chemical Methods

ATTACHMENT 25

METHOD 7196

CHROMIUM, HEXAVALENT (COLORIMETRIC)

1.0 SCOPE AND APPLICATION

1.1 Method 7196 is used to determine the concentration of dissolved hexavalent chromium [Cr(VI)] in Extraction Procedure (EP) toxicity characteristic extracts and ground waters. This method may also be applicable to certain domestic and industrial wastes, provided that no interfering substances are present (see Paragraph 3.1 below).

1.2 Method 7196 may be used to analyze samples containing from 0.5 to 50 mg of Cr(VI) per liter.

2.0 SUMMARY OF METHOD

2.1 Dissolved hexavalent chromium, in the absence of interfering amounts of substances such as molybdenum, vanadium, and mercury, may be determined colorimetrically by reaction with diphenylcarbazide in acid solution. A red-violet color of unknown composition is produced. The reaction is very sensitive, the absorbancy index per gram atom of chromium being about 40,000 at 540 nm. Addition of an excess of diphenylcarbazide yields the red-violet product, and its absorbance is measured photometrically at 540 nm.

3.0 INTERFERENCES

3.1 The chromium reaction with diphenylcarbazide is usually free from interferences. However, certain substances may interfere if the chromium concentration is relatively low. Hexavalent molybdenum and mercury salts also react to form color with the reagent; however, the red-violet intensities produced are much lower than those for chromium at the specified pH. Concentrations of up to 200 mg/L of molybdenum and mercury can be tolerated. Vanadium interferes strongly, but concentrations up to 10 times that of chromium will not cause trouble.

3.2 Iron in concentrations greater than 1 mg/L may produce a yellow color, but the ferric iron color is not strong and difficulty is not normally encountered if the absorbance is measured photometrically at the appropriate wavelength.

4.0 APPARATUS AND MATERIALS

4.1 Colorimetric equipment: One of the following is required: Either a spectrophotometer, for use at 540 nm, providing a light path of 1 cm or longer, or a filter photometer, providing a light path of 1 cm or longer and equipped with a greenish-yellow filter having maximum transmittance near 540 nm.

5.0 REAGENTS

5.1 ASTM Type II water (ASTM D1193): Water should be monitored for impurities.

5.2 Potassium dichromate stock solution: Dissolve 141.4 mg of dried potassium dichromate, $K_2Cr_2O_7$ (analytical reagent grade), in Type II water and dilute to 1 liter (1 mL = 50 ug Cr).

5.3 Potassium dichromate standard solution: Dilute 10.00 mL potassium dichromate stock solution to 100 mL (1 mL = 5 ug Cr).

5.4 Sulfuric acid, 10% (v/v): Dilute 10 mL of distilled reagent grade or spectrograde quality sulfuric acid, H_2SO_4, to 100 mL with Type II water.

5.5 Diphenylcarbazide solution: Dissolve 250 mg 1,5-diphenylcarbazide in 50 mL acetone. Store in a brown bottle. Discard when the solution becomes discolored.

5.6 Acetone (analytical reagent grade): Avoid or redistill material that comes in containers with metal or metal-lined caps.

6.0 SAMPLE COLLECTION, PRESERVATION, AND HANDLING

6.1 All samples must have been collected using a sampling plan that addresses the considerations discussed in Chapter Nine of this manual.

6.2 Since the stability of Cr(VI) in EP extracts is not completely understood at this time, the analysis should be carried out as soon as possible.

6.3 To retard the chemical activity of hexavalent chromium, the samples and extracts should be stored at 4°C until analyzed. The maximum holding time prior to analysis is 24 hr.

7.0 PROCEDURE

7.1 Color development and measurement: Transfer 95 mL of the extract to be tested to a 100-mL volumetric flask. Add 2.0 mL diphenylcarbazide solution and mix. Add H_2SO_4 solution to give a pH of 2 $\pm$ 0.5, dilute to 100 mL with Type II water, and let stand 5 to 10 min for full color development. Transfer an appropriate portion of the solution to a 1-cm absorption cell and measure its absorbance at 540 nm. Use Type II water as a reference. Correct the absorbance reading of the sample by subtracting the absorbance of a blank carried through the method (see Note below). An aliquot of the sample containing all reagents except diphenyl semicarbazide should be prepared and used to correct the sample for turbidity (i.e., a turbidity blank). From the

corrected absorbance, determine the mg/L of chromium present by reference to the calibration curve.

NOTE: If the solution is turbid after dilution to 100 mL in Step 7.1, above, take an absorbance reading before adding the carbazide reagent and correct the absorbance reading of the final colored solution by subtracting the absorbance measured previously.

7.2 Preparation of calibration curve:

7.2.1 To compensate for possible slight losses of chromium during digestion or other operations of the analysis, treat the chromium standards by the same procedure as the sample. Accordingly, pipet a chromium standard solution in measured volumes into 250-mL beakers or conical flasks to generate standard concentrations ranging from 0.5 to 5 mg/L Cr(VI) when diluted to the appropriate volume.

7.2.2 Develop the color of the standards as for the samples. Transfer a suitable portion of each colored solution to a 1-cm absorption cell and measure the absorbance at 540 nm. As reference, use Type II water. Correct the absorbance readings of the standards by subtracting the absorbance of a reagent blank carried through the method. Construct a calibration curve by plotting corrected absorbance values against mg/L of Cr(VI).

7.3 Verification:

7.3.1 For every sample matrix analyzed, verification is required to ensure that neither a reducing condition nor chemical interference is affecting color development. This must be accomplished by analyzing a second 10-mL aliquot of the pH-adjusted filtrate that has been spiked with Cr(VI). The amount of spike added should double the concentration found in the original aliquot. Under no circumstances should the increase be less than 30 g Cr(VI)/liter. To verify the absence of an interference, the spike recovery must be between 85% and 115%.

7.3.2 If addition of the spike extends the concentration beyond the calibration curve, the analysis solution should be diluted with blank solution and the calculated results adjusted accordingly.

7.3.3 If the result of verification indicates a suppressive interference, the sample should be diluted and reanalyzed.

7.3.4 If the interference persists after sample dilution, an alternative method (Method 7195, Coprecipitation, or Method 7197, Chelation/Extraction) should be used.

7.4 Acidic extracts that yield recoveries of less than 85% should be retested to determine if the low spike recovery is due to the presence of residual reducing agent. This determination shall be performed by first making an aliquot of the extract alkaline (pH 8.0-8.5) using 1 N sodium hydroxide and then respiking and analyzing. If a spike recovery of 85-115% is

obtained in the alkaline aliquot of an acidic extract that initially was found to contain less than 5 mg/L Cr(VI), one can conclude that the analytical method has been verified..

7.5 Analyze all EP extracts, all samples analyzed as part of a delisting petition, and all samples that suffer from matrix interferences by the method of standard additions (see Method 7000, Section 8.7).

8.0 QUALITY CONTROL

8.1 All quality control data should be maintained and available for easy reference or inspection.

8.2 Dilute samples if they are more concentrated than the highest standard or if they fall on the plateau of a calibration curve.

8.3 Employ a minimum of one blank per sample batch to determine if contamination or any memory effects are occurring.

8.4 Verify calibration with an independently prepared check standard every 15 samples.

8.5 Run one spike duplicate sample for every 10 samples. A duplicate sample is a sample brought through the whole sample preparation and analytical process.

8.6 The method of standard additions (see Method 7000, Section 8.7) shall be used for the analysis of all EP extracts, on all analyses submitted as part of a delisting petition, and whenever a new sample matrix is being analyzed.

9.0 METHOD PERFORMANCE

9.1 The data shown in Table 1 were obtained from records of state and contractor laboratories. The data are intended to show the precision of the combined sample preparation and analysis method.

10.0 REFERENCES

1. Methods for Chemical Analysis of Water and Wastes, EPA-600/4-82-055, December 1982, Methods 218.4 and 218.5.

2. Gaskill, A., Compilation and Evaluation of RCRA Method Performance Data, Work Assignment No. 2, EPA Contract No. 68-01-7075, September 1986.

TABLE 1. METHOD PERFORMANCE DATA

Sample Matrix	Preparation Method	Laboratory Replicates
Wastewater treatment sludge	Not known	0.096, 0.107 ug/g
Sediment from chemical storage area	3060	115, 117 ug/g

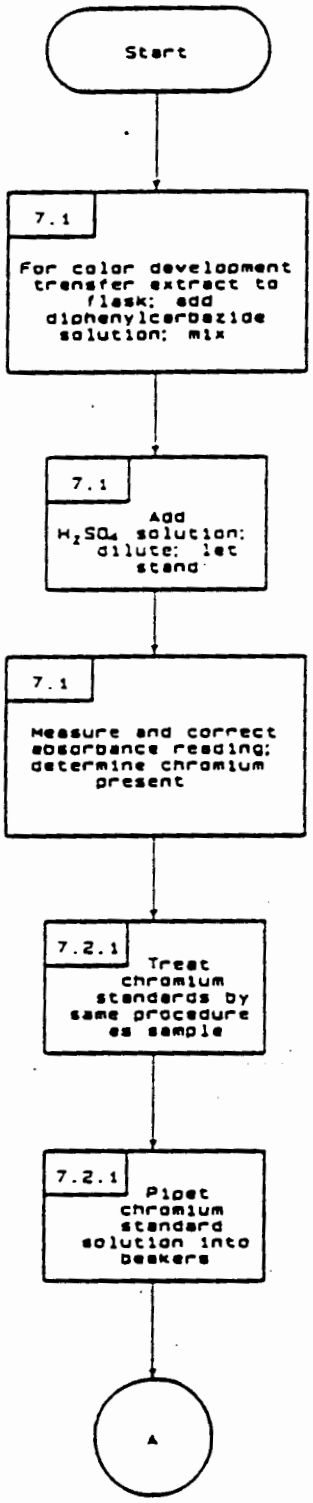
Start
7.1
For color development transfer extract to flask; add diphenylcarbazide solution; mix
7.1
Add H_2SO_4 solution; dilute; let stand
7.1
Measure and correct absorbance reading; determine chromium present
7.2.1
Treat chromium standards by same procedure as sample
7.2.1
Pipet chromium standard solution into beakers
A

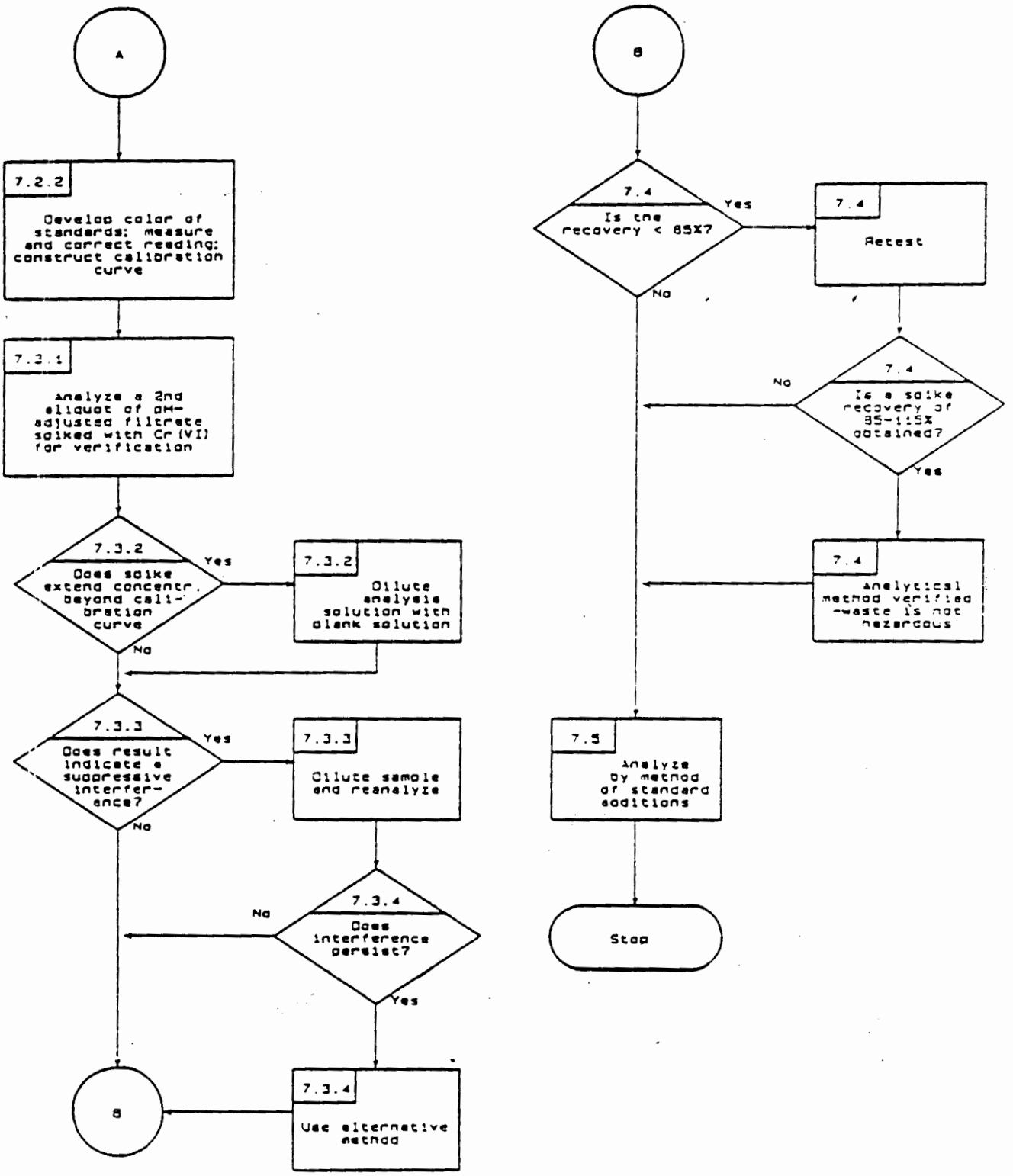
A
7.2.2
Develop color of standards; measure and correct reading; construct calibration curve
7.3.1
Analyze a 2nd aliquot of pH-adjusted filtrate spiked with Cr(VI) for verification
7.3.2
Does spike extend concentr. beyond calibration curve
Yes
No
7.3.2
Dilute analysis solution with blank solution
7.3.3
Does result indicate a suppressive interference?
Yes
No
7.3.3
Dilute sample and reanalyze
7.3.4
Does interference persist?
No
Yes
7.3.4
Use alternative method
B
B
7.4
Is the recovery < 85%?
Yes
No
7.4
Retest
7.4
Is a spike recovery of 85-115% obtained?
No
Yes
7.4
Analytical method verified -waste is not hazardous
7.5
Analyze by method of standard additions
Stop