Low-NOx Burner Model Operation Design (Nat Gas only @ 387 MMBtu/hr)

Point #	1	2	3	4	5A	5B	5C	5D	6	7	8A,B	9 A,B	10 A,B	11 A,B
Description	Primary Cooler Fan 3A	Secondary Cooler Fan 3B	Cooler Stack	Parallel Flow Duct	Coal Sys. Air	New Comb. Air Fan	Burner Cooling Air	Burner Atomizing Air	Recoup Duct	Kiln Exhaust Air	Preheat Fan 1A,B Inlet (each)	Waste Gas Fan 2A,B Inlet (each)	Scrubber Fans 4A,B Inlet (each)	Scrubber Inlet (each)
Air Flow (acfm)	161,000	307,000	325,000	529,000	0	**63,000**	4,700	1,600	588,000	921,000	**467,037**	516,000	476,000	453,000
Air Temperature (F)	70	70	934	2023		70	74	74	1695	2,150	750	304	275	275
Air Pressure (".w.c.)	10.5	17.5	1.0	-0.5		0.0	0.0	20	-0.1	-0.5	-17	-18	-1.5	18.6
Moisture (%m)	0.8%	0.8%	0.8%	0.8%		0.8%	0.8%	0.8%	0.8%	0.8%	0.8%	8.0%	8.0%	8.0%
Air Density (lb/cf)	0.073	0.074	0.027	0.015		0.071	0.071	0.074	0.018	0.014	0.030	0.046	0.050	0.052
Air Flow (lb/min)	11,755	22,853	8,828	8,035	0	**4,489**	**333**	**117**	10,292	13,306	13,921	23,690	23,690	23,690

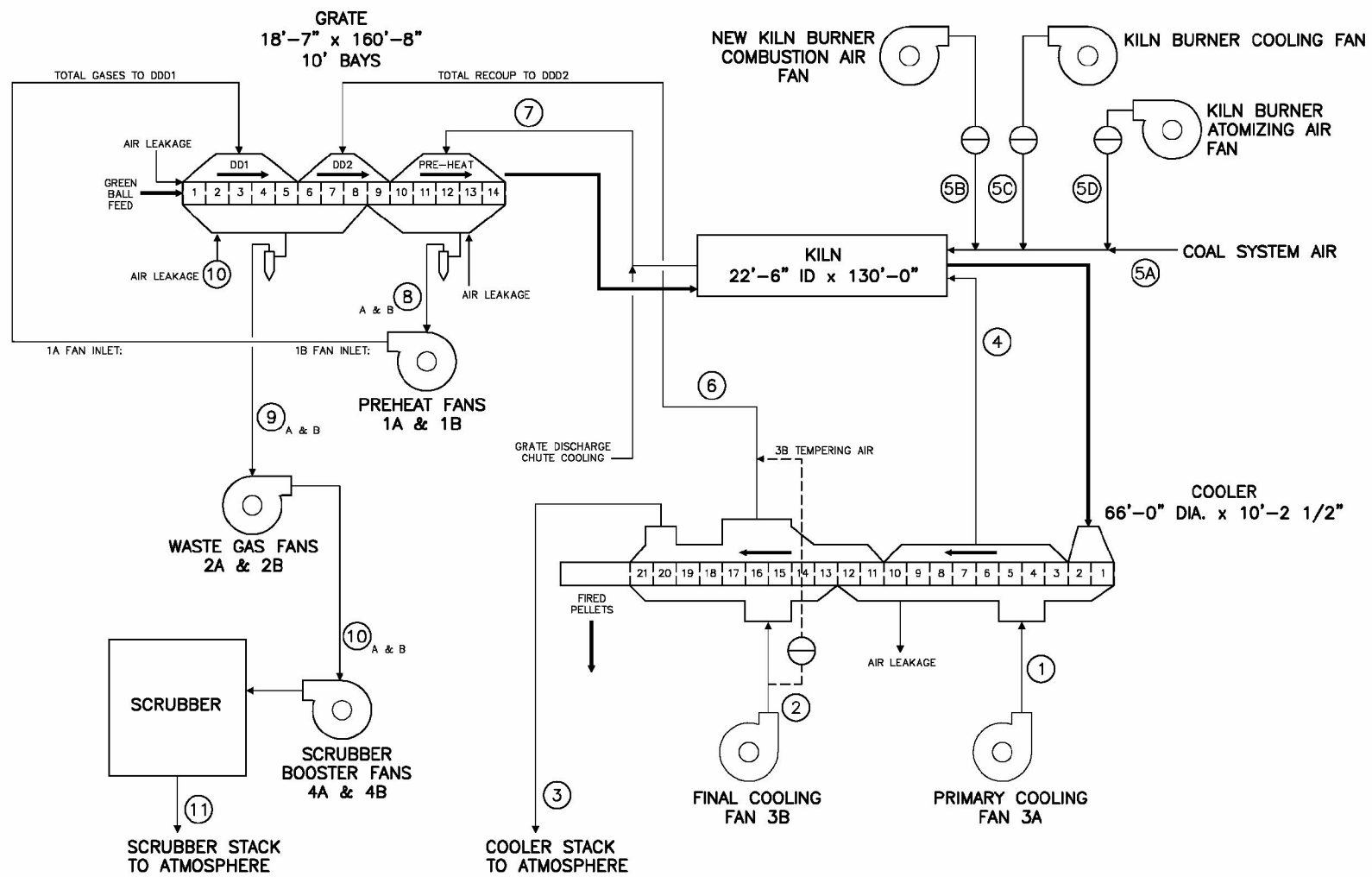

THIS DRAWING IN DESIGN AND DETAIL IS THE PROPERTY OF UNITED STATES STEEL, AND MUST NOT BE USED EXCEPT IN CONNECTION WITH ITS WORK. ALL RIGHTS OF DESIGN AND INVENTION ARE RESERVED. COPYRIGHT UNITED STATES STEEL

KEY PLAN

DRAWING NO.	DRAWING TITLE
REFERENCES	

NO.	DESCRIPTION	CHK'D	APP'D	DATE
REVISIONS				

SEAL

REV.	ISSUE FOR	AUTH. BY	DATE
ISSUE AUTHORIZATION			

HATCH™

DESIGNED BY D. MYSKO	DRAWN BY D. WALKOWSKI
DATE 10/11/2012	DATE 10/11/2012
CHECKED BY	DISCIP. ENGR.
DATE	DATE
ENGR. MGR.	AREA ENGR.
DATE	DATE
PROJ. MGR.	HA PROJ. NO. 339118
DATE	

USS MINNESOTA ORE OPERATIONS
United States Steel

KEETAC LINE #2 LOW NOx BURNER

NEW LOW NOx BURNER AIR FLOW

KEETAC DWG. NO.	USS PROJ. NO.
XXX	UKT1–0074

SCALE	HA DWG. NO.	SIZE	REV.
NONE	New Process Air Flow PFD	–	A

KEETAC_114_00000022