URS

SUMMARY REPORT
INTERIM REMEDIAL (STABILIZATION)
MEASURES IMPLEMENTATION

FORMER STANLEY TOOLS FACILITY
FOWLERVILLE, MICHIGAN

Prepared for:

JOHNSON CONTROLS, INC.

JOB NO.: 20209-019-121
OCTOBER 24, 2001

36 East 7th Street, Suite 2300
Cincinnati, Ohio 45202
Voice (513) 651-3440
Fax (513) 651-3452

CONTENTS

Section	Page
INTRODUCTION	1
SCOPE OF WORK	1
IRM IMPLEMENTATION	2
NORTH AREA	2
SOUTH AREA	3
TEST PITS	4
LABORATORY ANALYSES	5
DISPOSAL OF MATERIAL	7
SITE RESTORATION	7
CONCLUSIONS	8

TABLES
(follow text)

Number

1 INTERIM REMEDIAL (STABILIZATION) MEASURES – OIL SEEPS

2 INTERIM DELINEATION MEASURES – TEST PITS

3 RESULTS OF LABORATORY ANALYSES – WASTE DISPOSAL

FIGURES
(follow tables)

Number

1 INTERIM REMEDIAL (STABILIZATION) MEASURES - NORTH EXCAVATION

2 INTERIM REMEDIAL (STABILIZATION) MEASURES - SOUTH EXCAVATION

3 INTERIM REMEDIAL (STABILIZATION) MEASURES – TEST PIT LOCATIONS

CONTENTS
(Continued)

APPENDICES
(follow figures)

Appendix

A TEST PIT LOGS

B LABORATORY REPORTS - OIL SEEPS AND TEST PIT SAMPLES

C LABORATORY REPORTS – WASTE DISPOSAL

D WASTE DISPOSAL MANIFESTS

INTRODUCTION

This report summarizes Interim Remedial (Stabilization) Measures (IRM) conducted by Johnson Controls, Inc. [JCI] at two areas at the former Stanley Tools Facility in Fowlerville, Michigan. The work was performed in accordance with the Work Plan dated October 19, 2000 to mitigate oil seepage entering the Red Cedar River adjacent to the facility either through the piping or riverbank soil. Interim measures were conducted between August 15 and 22, 2001 by ENTACT of Wood Dale, Illinois, under the observation of a URS representative.

In addition to the primary objective of the IRM Work Plan described above, the IRM was intended to gather additional information regarding the nature and extent of the constituents associated with the seepage, in order to allow for appropriate consideration during the remaining Resource Conservation and Recovery Act (RCRA) Facility Investigation (RFI).

SCOPE OF WORK

The following measures were implemented to achieve the two objectives stated above:

- JCI retained an experienced remediation contractor to access the two seepage areas (North Area and South Area) and install controls to minimize the potential for release of oil or stream-bank soil during the IRM.

- The contractor excavated and removed the historic discharge piping and visibly oil-impacted soil within 20 feet (horizontal) of the normal high water edge at the North Area and 15 feet at the South Area. The contractor then backfilled the excavation and installed a high-density polyethylene (HDPE) liner to act as a barrier to future migration.

- The contractor excavated seven test pits landward of the seepage areas to better define the lateral extent of the subsurface oil.

IRM IMPLEMENTATION

The contractor (ENTACT) arrived on site on August 14, 2001 and began site preparation, which was completed on August 15. The areas of pipe removal were cleaned of vegetation, silt fences were installed 5 feet inland from the river edge, a personnel decontamination area was set up, 10 roll-off boxes were staged and a 4,600 gallon polypropylene water storage tank was staged inside a temporarily bermed and lined area. (A 21,000 gallon frac tank was delivered to the site on August 18.) A temporary construction fence was installed across both areas where a portion of the security fence had been removed. The ends of the pipes to the north were plugged with Quikrete® on August 15.

NORTH AREA

Excavation and removal of the northern set of pipes began on August 16. A trackhoe was used to excavate the material, which was then placed directly into a rubber-tired end-loader bucket, which transported the material to a roll-off box. The trackhoe and end-loader always operated outside the excavated area with only it's buckets in contact with potentially contaminated material. The excavation was approximately 22 feet wide extending about 27 feet inland. The three exposed polyvinyl chloride (PVC) pipes were cut, removed, and plugged with Quikrete®. The removed portions were placed in a roll-off box. The inside of all three pipes appeared clean with no visible signs of contamination in the surrounding soil; however, there was some discoloration in the bottom of the excavation along the southern portion. Upon further excavation, pieces of a broken clay tile pipe were uncovered. A sketch of the final excavation is shown on Figure 1.

Soil from an area approximately 10 feet wide along the length of the existing excavation was removed to a depth of another 12 to 18 inches. The clay tile pipe was estimated to be 12 to 15 inches in diameter, but this could not be confirmed because of its condition. The pipe ran somewhat parallel to an 8-inch diameter PVC pipe, one of the three exposed pipes identified in the previous paragraph, and in the direction of the existing former

treatment building. This pipe, or what is believed to be the same pipe, was encountered in the north end of test pit, E-TP-1, on the west side of the building and contained water and sediment/sludge that was observed entering the test pit excavation.

Soil samples were obtained from the bottom and from the north sidewall (crushed pipe section) of the final excavation, the analytical results of which are discussed in the following section.

A layer of gravel was placed over the bottom of the excavation. A soil berm (barrier) was then constructed across the excavated area and a 60 mil HDPE liner was placed across the eastern face of the berm. The entire excavation was then backfilled with imported sandy soil.

Following backfilling, the section of soil that was left in place adjacent to the river edge (to prevent flooding of the initial excavation) was then removed and replaced with clean backfill. Topsoil was later placed and the area was seeded and strawed. A silt fence was re-installed installed adjacent to the river edge.

SOUTH AREA

Excavation of the southernmost clay pipe area began on August 17 and was completed on August 20 using the same equipment used at the north pipe area. The procedures implemented varied somewhat from those set forth in the Work Plan based on site conditions. Because the pipe diameter was actually 18 inches instead of the anticipated 12 inches, the contractor was unable to plug the end, as he was unable to acquire that large of a plug on short notice.

An initial excavation over the pipe was started about 5 feet inland of the river to keep water from entering the excavation per plan. The top of the pipe was exposed at a depth of 9 feet. The dike at the river edge was then removed allowing water to flow into the excavation. The first section of pipe at the river edge was then removed allowing water to flow into the excavated pipe trench. A berm was then reconstructed at the river edge across the excavation using imported clay. Water was then pumped from the excavation

to the frac tank and excavating then continued uncovering the pipe for a distance of about 15 feet inland, where a bell joint was exposed. The pipe was then removed to this point. The pipe contained water and sludge that flowed into the excavation. A sample of the sludge was obtained for chemical analyses. Water entering the excavation from the pipe was pumped to the frac tank. Remaining material in the excavation was removed and placed in roll-off boxes. A soil sample was obtained from the excavation on the south side of the pipe and from the bottom of the excavation.

An 18-inch diameter plywood plug was placed into the end of the exposed pipe and a sheet of 1-inch plywood placed in front of the pipe across the width of the pipe trench. A second sheet was inserted 6 inches in front of the first piece. The 6-inch area between the sheets was then filled with Quikrete® to a level above the pipe.

A layer of gravel was placed in the bottom of the excavation. A berm (barrier) was then constructed across the width of the excavation with imported sandy soil and a layer of 60-mil HDPE liner was installed over the eastern face of the berm. The remaining excavation was backfilled with sandy soil and remaining imported clayey soil. Topsoil was placed and the area seeded and strawed.

A sketch of the excavation is shown on Figure 2.

TEST PITS

A total of seven test pits were excavated in the areas of Solid Waste Management Units (SWMUs) B, C, and E to investigate the potential impact and extent of leakage from the piping units and establish the source of free product present in groundwater monitoring wells MW-C2 and MW-C3. The depth of the test pits varied between 6 feet and 9.5 feet below the ground surface. Although soil discoloration and a chemical odor was noted in all test pits, no free product was encountered at any of the locations; however, where water was encountered, an oil sheet was generally observed. Soil samples were obtained from test pits B-TP-3 and E-TP-2, the results of which are discussed in the section that follows.

A clay tile pipe was encountered at two test pit locations, one at E-TP-2 as previously discussed and the other at B-TP-3. At the later location, the pipe encountered is believed to be the 18-inch diameter clay tile pipe that was removed in the South Area adjacent to the Red Cedar River. The bell of a joint was exposed at a depth of 5 feet and the pipe appeared to be encased in concrete at this location.

All test pit excavations were backfilled with the excavated material and a wooden stake with the test pit number was installed at each location. A log of each test pit is included in Appendix A. Test pit locations are shown on Figure 3.

LABORATORY ANALYSES

As mentioned above, eight samples were collected and sent to Severn Trent Laboratories of Denver, Colorado for testing of RCRA metals, volatile organic compounds (VOCs), semivolatile organic compounds (SVOCs), and polychlorinated biphenyls (PCBs). Four soil samples and one sediment sample from the south pipe were collected from the pipe excavations and three soil samples were from test pits. The results of these analyses are presented on Tables 1 and 2 and discussed below.

Samples in the north excavation were collected from the north sidewall of the excavation at 4 feet of depth (roughly the same level as the crushed pipe) and in the base of the excavation under where the crush pipe was removed. The data from these samples suggest no evidence of impact from metals, VOCs, SVOCs, or PCBs with the exception of a trace detection of chlorobenzene.

Soil samples in the south excavation were collected from a sidewall adjacent to the pipe and from under the pipe. An additional sample was collected from the sediment/muck found within the excavated pipe. The data suggest that the sediment is elevated relative to the surrounding soil with respect to several parameters: arsenic, chromium, mercury, phenanthrene (a polynuclear aromatic hydrocarbon [PAH]), and the PCB Aroclor 1248. No VOC detections were identified in the sediment sample, but detection limits were elevated by three or more orders of magnitude, likely because of the organic muck character of the material. In addition to the sediment sample, the soil samples from the south excavation contained traces of a variety of VOCs including acetone, 2-butanone, 1,1-dichloroethane (1,1-DCA), 1,2-dichloroethene (1,2-DCE), and vinyl chloride.

Test pit samples were collected from the sidewalls of pits excavated in the vicinity of SWMUs E and B. The samples were collected to characterize materials that were notably stained or had a distinctive odor. The data suggest that the selected materials were generally elevated in chromium, some SVOCs, and PCBs, although the degree of impact varied considerably. Chromium, and to a lesser extent mercury, appears elevated in each of the samples relative to the excavation soil samples, but the concentrations have a significant spread from 151 to 2,470 mg/kg, with the highest concentration in sample B-TP-3 (5 feet) collected from a green sludge-like material. The VOC 1,2-dichlorobenzene was detected in both samples from SWMU B, though the detection limits are several orders of magnitude different. Two PAHs were detected in B-TP-3 (5 feet). PCBs were detected in all three samples, with concentrations over 1 mg/kg detected in E-TP-2 and B-TP-3 (5 feet).

One additional piece of data regarding contaminant distribution was obtained in the field by observation of the presence or absence of free-phase petroleum product or other non-aqueous phase liquid (NAPL). This observation is important because the suspected NAPL was highly weathered kerosene, which elsewhere has not had a significant VOC or SVOC signature. Each of the excavations, except for the northern pipe excavation, encountered water but no free-phase liquid was found. This include two test pits dug to 7.5 and 9.5 feet on either side of monitoring wells MW-C1 and C-3 in which free-phase kerosene has been measured.

These combined data suggest that impact to soil is relatively less in the pipe excavations near the river. The sediment in the southern pipe appears to be preferentially impacted, but, although it may have been in the past, it does not currently appear to be a significant residual source of impact. Instead, the sediment appears similar in character to discolored soils sampled in the test pits. The discolored soils were encountered in most of the test pits dug to investigate SWMUs B, C, and E, suggesting that similar levels of impact may be widely distributed in the area at depths ranging through the test pit depths as great as 9 feet. The lack of kerosene in pits in SWMU C suggests that the kerosene may be entrained in a deeper groundwater zone that intercepts wells where free-phase liquid has been found.

DISPOSAL OF MATERIAL

Material excavated from the north and south pipe removal areas was placed in roll-off boxes. Representative samples were obtained from each roll-off box by the contractor to ascertain disposal requirements. Samples were analyzed by Pace Analytical (Pace) of Indianapolis, Indiana, the results of which are summarized in Table 3. Laboratory reports are included in Appendix C. Based on the results of these analyses all material was disposed of as non-hazardous at Woodland Meadows RDF located in Van Buren, Michigan. Copies of the disposal manifests are included in Appendix D.

A sample of water was also obtained from the frac tank by the contractor and sent to Pace for analyses. Based on the results of these analyses, the water was transported to Michigan Disposal Waste Treatment Plant located in Belleville, Michigan for disposal. The laboratory report is included in Appendix C; disposal manifests are included in Appendix D.

SITE RESTORATION

The site was restored following completion of the IRM. Impacted areas were smoothed over, the sections of the security fence that were removed were replaced, and the liner and berm constructed around the 4,600-gallon polypropylene tank were removed. The liner,

old fence parts, and miscellaneous debris were placed in a roll-off box and disposed of with the other roll-off boxes.

CONCLUSIONS

Based on the observations of the URS on-site representative during the IRM, it is our opinion that the measures conducted at the north and south pipe areas to mitigate potential seepage of oil from entering the Red Cedar River through potential pipeline passways were completed in accordance with the intent of the Work Plan with some necessary modifications based on site conditions encountered.

The test pits excavated in the areas of SWMU-B, C, and E did not reveal any free product or the potential source of the free product present in monitoring wells MW-C2 and MW-C3. However, soil discoloration and chemical odor were noted at all locations.

TABLE 1

DETECTION SUMMARY
INTERIM REMEDIAL (STABILIZATION) MEASURES - PIPE EXCAVATIONS

JOHNSON CONTROLS, INC.
FORMER STANLEY TOOLS FACILITY - FOWLERVILLE, MICHIGAN

	North Excavation		South Excavation			
Metals (mg/kg)	**E1-N (N 4 feet)**	**E1-N (Base)**	**E2-S (Next to Pipe)**	**E2-S (Base)**	**S-18 in Pipe (Sediment)**	**TB 8/17/01**
Arsenic	7.5	2.8	7.3	4.6	69.9	NA
Barium	10.1	55.1	91.8	39.0	32.7	NA
Cadmium	<0.60	<0.59	<0.63	<0.58	<0.68	NA
Chromium	3.4	10.9	11.6	12.3	103	NA
Lead	1.1	3.2	9.6	4.8	11.6	NA
Mercury	<0.039	0.0083 B	0.058	0.0062 B	0.075	NA
Volatile Organic Compounds (µg/kg)						
Acetone	<24	<24	180	<19	<1,400	2.8 J
2-Butanone (MEK)	<24	<24	48	<19	<1,400	<5.0
Chlorobenzene	7.1	6.5	<10	<4.6	<340	<1.0
Chloroethane	<12	<12	<20	1.3 J	<680	<2.0
1,2-Dichlorobenzene	<6.0	2.2 J	<10	<4.6	<340	<1.0
1,1-Dichloroethane	<6.0	<5.9	24	43	<340	<1.0
1,2-Dichloroethene (total)	<6.0	<5.9	5.8 J	31	<340	<1.0
cis-1,2-Dichloroethene	<3.0	<5.9	2.5 J	19	<170	<1.0
trans-1,2-Dichloroethene	<3.0	<5.9	3.3 J	12	<170	<0.50
Vinyl chloride	<12	<12	6.3 J	41	<680	<1.0
Semivolatile Organic Compounds (µg/kg)						
Benzo (a) pyrene	<390	<390	150 J	<380	<1,800	NA
Fluorene	<390	<390	<420	<380	1,600 J	NA
Phenanthrene	<390	<390	<420	<380	2,700	NA
Pyrene	<390	<390	<420	<380	680 J	NA
Polychlorinated Biphenyls (µg/kg)						
Aroclor 1016	<39	95	<42	<38	<900	NA
Aroclor 1242	<39	100	<42	<38	<900	NA
Aroclor 1248	<39	<39	28 J	<38	2,500	NA
Aroclor 1254	<39	<39	<42	100	<900	NA
Aroclor 1260	<39	<39	<42	99	<900	NA
Percent Moisture (%)	16.3	15.6	20.8	13.8	27.0	NA

Samples collected by URS August 2001
Samples analyzed by STL in Denver, Colorado September 2001
B = Estimated result - result is less than reporting limit
J = Estimated result - result is less than reporting lmit
NA = Not analyzed

TABLE 2

DETECTION SUMMARY
INTERIM DELINEATION MEASURES - TEST PITS

JOHNSON CONTROLS, INC.
FORMER STANLEY TOOLS FACILITY - FOWLERVILLE, MICHIGAN

	SWMU E	SWMU B	
Metals (mg/kg)	**E-TP-2 (4 feet)**	**B-TP-3 (4 feet)**	**B-TP-3 (5 feet)**
Arsenic	5.9	1.2	<18.7
Barium	44.1	20.2	23.1
Cadmium	0.067 B	0.054 B	<9.4
Chromium	151	969	2,470
Lead	11.8	8.1	11.2 B
Mercury	0.050	0.021 B	0.087
Volatile Organic Compounds (μg/kg)			
1,2-Dichlorobenzene	<2,800	34	4,200 J
Isopropylbenzene	<2,800	2.3 J	<7,500
Methylene chloride	<2,800	1.2 J	<7,500
Semivolatile Organic Compounds (μg/kg)			
Fluorene	150 J	<370	2,300
Phenanthrene	<360	<370	1,300
Pyrene	<360	<370	<1,200
Polychlorinated Biphenyls (μg/kg)			
Aroclor 1248	2,700	260	4,300
Aroclor 1260	<360	38	<1,200
Percent Moisture (%)	9.2	11.7	46.6

Samples collected by URS August 2001
Samples analyzed by STL in Denver, Colorado September 2001
B = Estimated result - result is less than reporting limit
J = Estimated result - result is less than reporting lmit
NA = Not analyzed

TABLE 3

RESULTS OF LABORATORY ANALYSES - WASTE DISPOSAL
SUPPLEMENTAL SAMPLING DATA RESULTS

JOHNSON CONTROLS, INC.
FORMER STANLEY TOOLS FACILITY - FOWLERVILLE, MICHIGAN

Parameter	Reporting Limit	Sample ID (Excavated Soil)									
		WCS-001WP	WCS-002	WCS-003	WCS-004	WCS-005	WCS-005FD	WCS-006	WCS-007	WCS-008	WCS-009
Barium, TCLP (mg/L)	0.100	0.629	0.962	0.63	0.586	0.565	0.580	0.589	0.559	0.624	0.550
Chromium, TCLP (mg/L)	0.0500	-	-	-	0.0604	-	-	-	-	-	
Selenium, TCLP (mg/L)	0.0100	-	-	-	-	-	-	-	-	-	0.0110
Phenathrene, TCLP (µg/kg)	330	-	-	370	-	-	-	-	-	-	-
Fluoranthene, TCLP (µg/kg)	330	-	-	550	-	-	-	-	-	-	-
Pyrene, TCLP (µg/kg)	330	-	-	440	-	-	-	-	-	-	-
PCB-1248 (µg/kg)	160	210	650	410	160	330	380	70	340	1,400	920

	WCW-001 (water)
Arsenic (mg/L)	0.0586
Barium (mg/L)	0.426
Cadmium (mg/L)	0.00966
Chromium (mg/L)	1.94
Lead (mg/L)	0.458
bis (2-Ethylhexyl) phthalate (µg/L)	240
PCB-1248 (µg/L)	20
Vinyl chloride (µg/L)	45
trans-1,2-Dichloroethene (µg/L)	20
1,1-Dichloroethane (µg/L)	6.0
cic-1,2-Dichloroethene (µg/L)	150
Trichloroethene (µg/L)	61

"-" = None detected above reporting limit

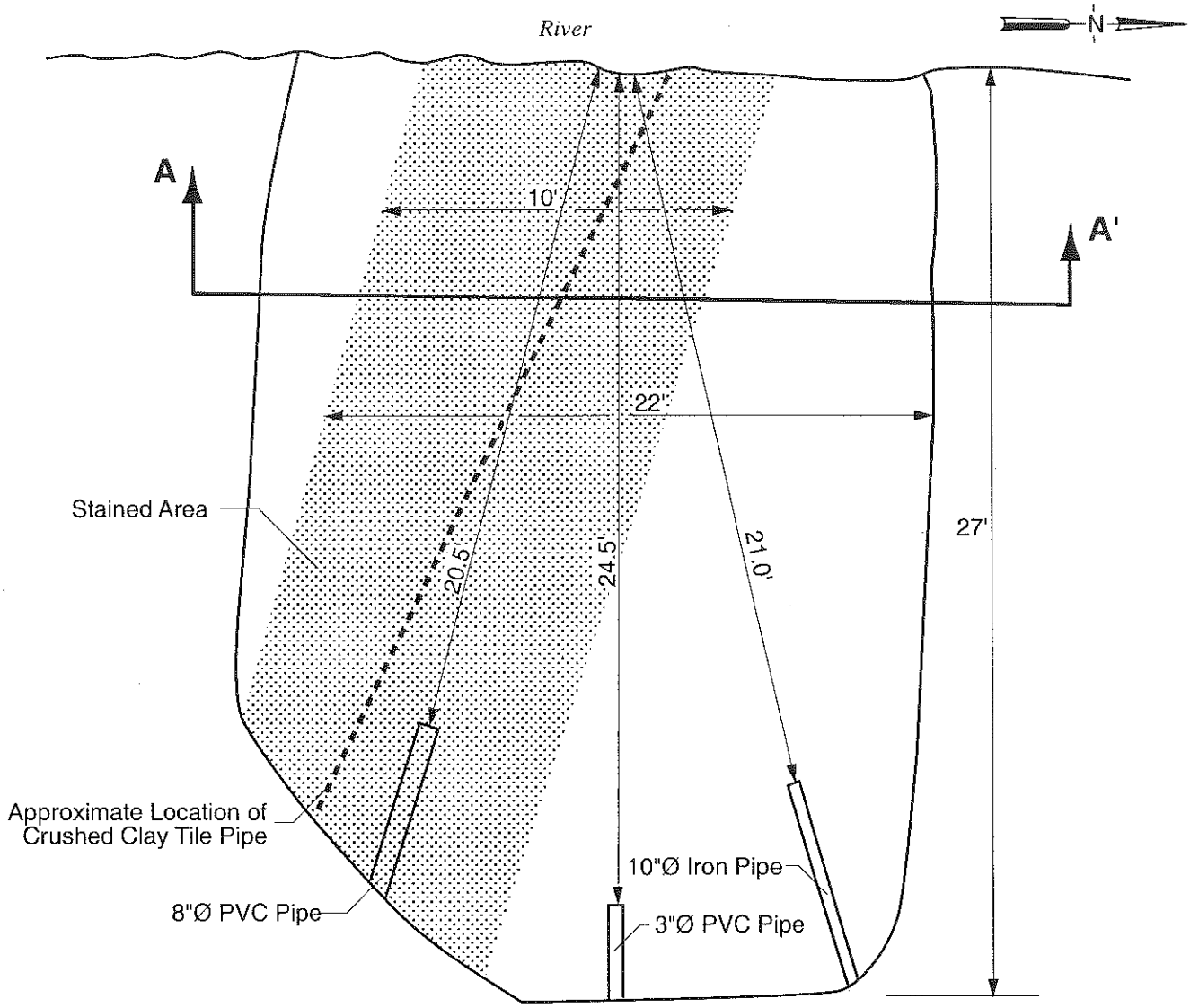

PLAN VIEW

Approximate Scale: 1" = 5'

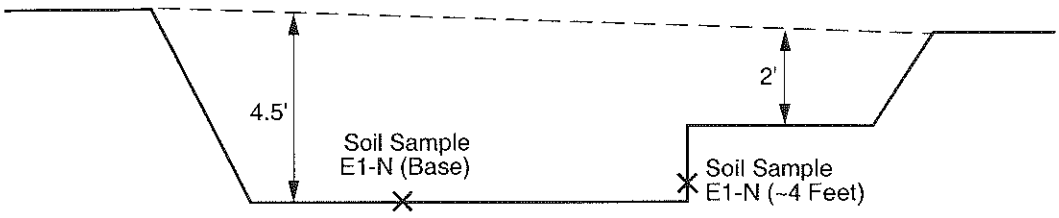

SECTION A - A'

Approximate Scale: 1" = 5'

Johnson Controls, Inc.
Former Stanley Tools Facility
Fowlerville, Michigan

FIGURE 1
INTERIM REMEDIAL
(STABILIZATION) MEASURES
NORTH EXCAVATION

JOB NO. 20209-019-121

URS

JOHNSON CONTROLS – 20209-01 52-121 – ISM AUGUST 2001

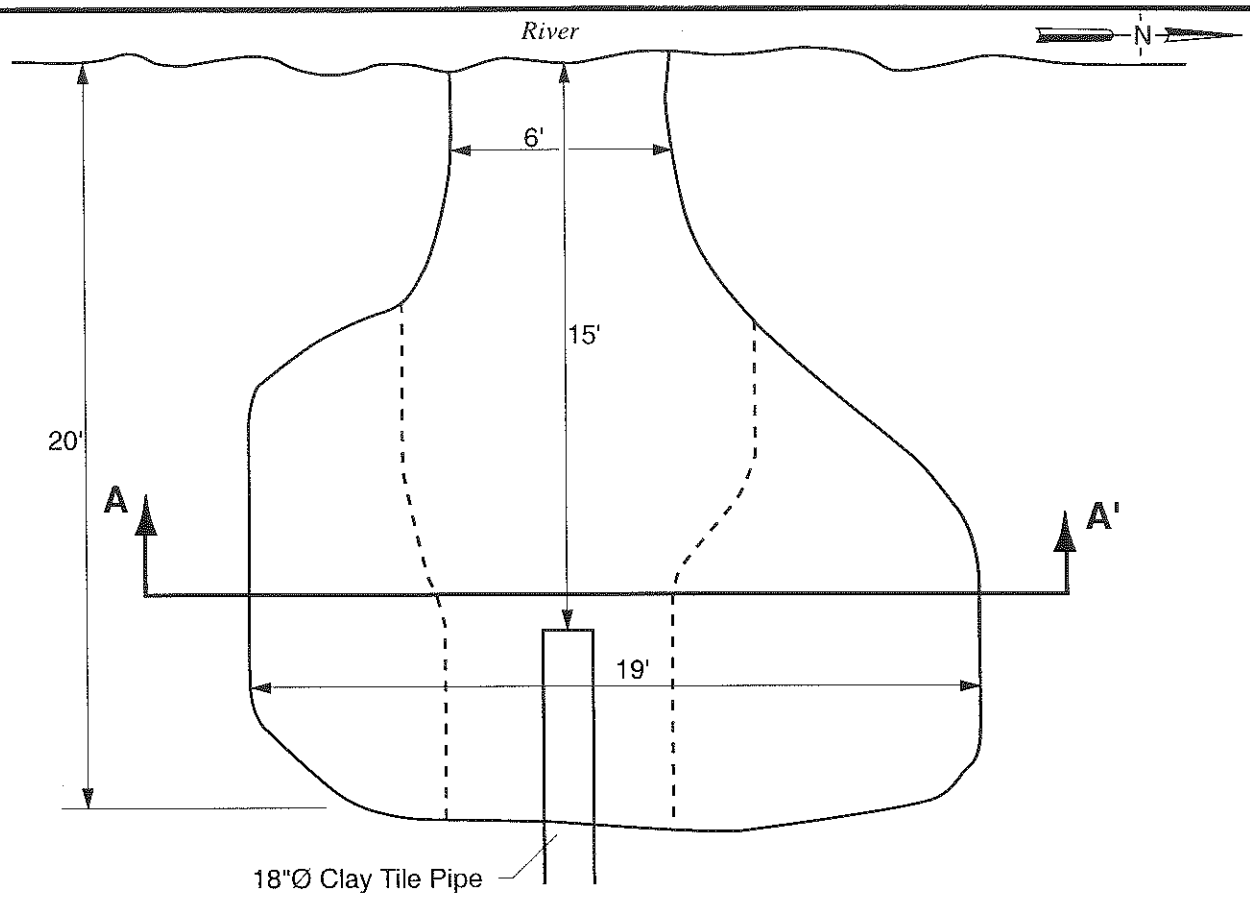

PLAN VIEW

Approximate Scale: 1" = 5'

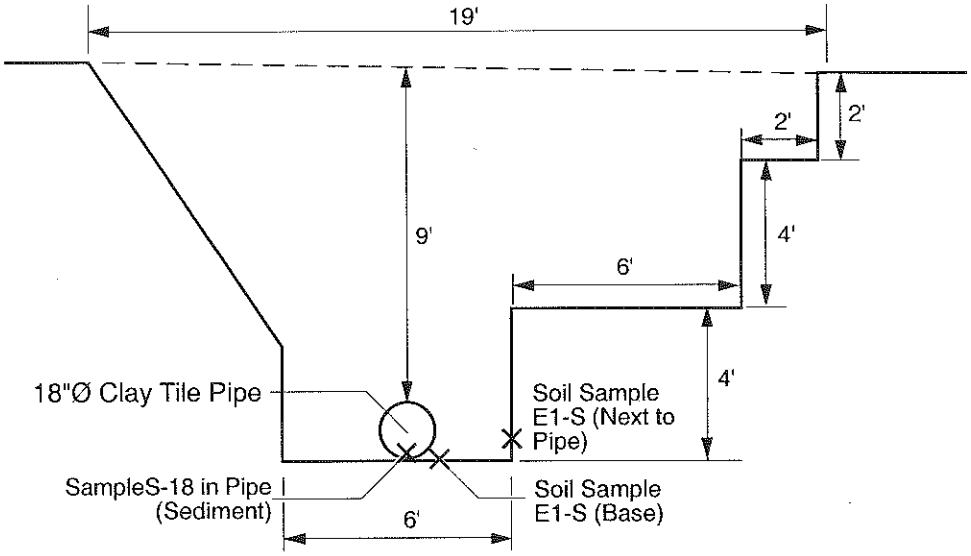

SECTION A - A'

Approximate Scale: 1" = 5'

Johnson Controls, Inc.
Former Stanley Tools Facility
Fowlerville, Michigan

FIGURE 2
INTERIM REMEDIAL
(STABILIZATION) MEASURES
SOUTH EXCAVATION

JOB NO. 20209-019-121

URS

JOHNSON CONTROLS -- 20209-01 2-121 – ISM AUGUST 2001

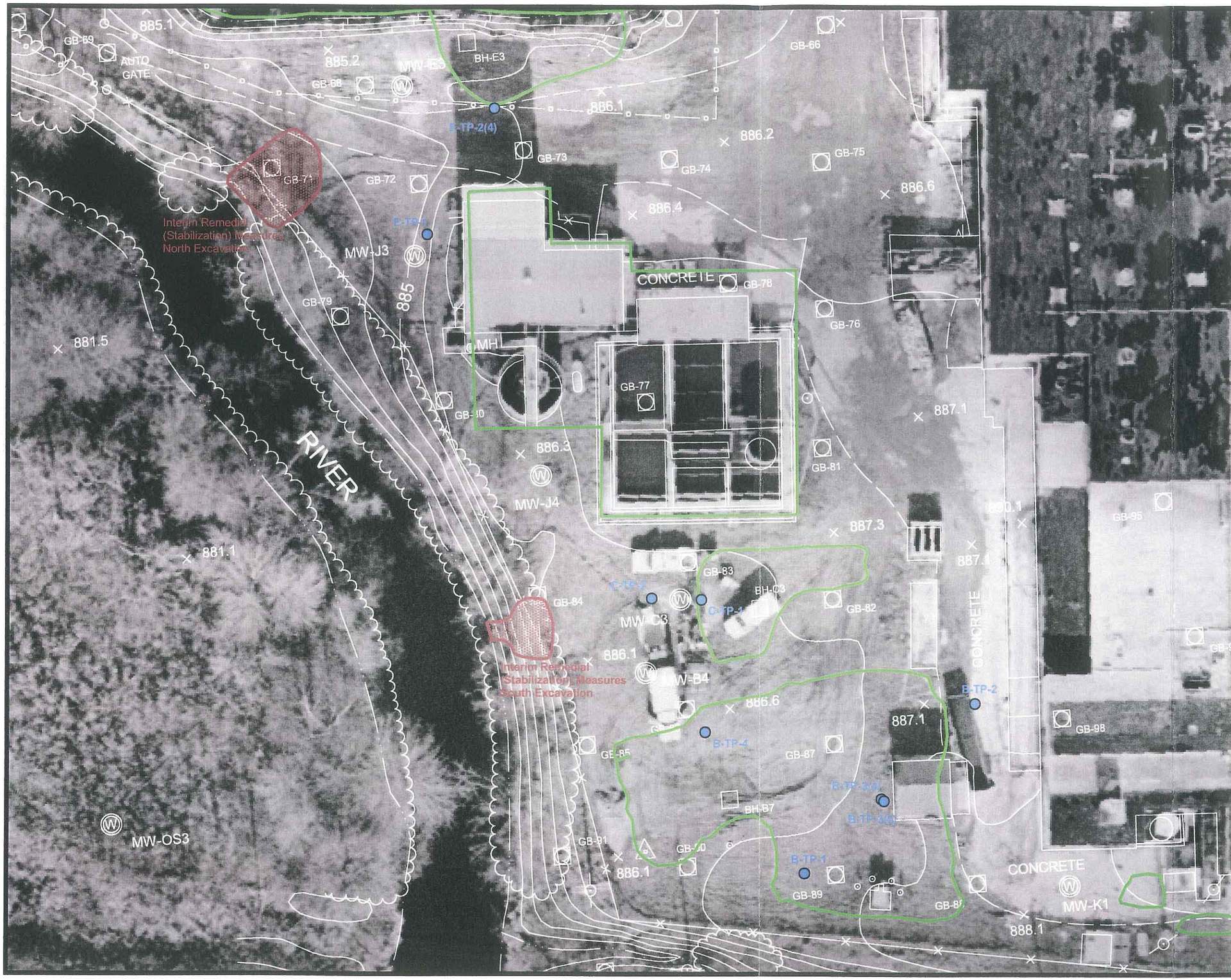

LEGEND:

- SOLID WASTE MANAGEMENT UNIT BOUNDARY
- INTERIM REMEDIAL (STABLIZATION) MEASURES AREA
- INTERIM REMEDIAL (STABILIZATION) MEASURES TEST PIT

0 30 60
SCALE IN FEET

Johnson Controls, Inc.
FORMER STANLEY TOOLS FACILITY
FOWLERVILLE, MICHIGAN

FIGURE 3
INTERIM REMEDIAL (STABILIZATION) MEASURES TEST PIT LOCATIONS

JOB NO. 20209-020-121

URS

APPENDICES

APPENDIX A

TEST PIT LOGS

Depth (Feet)	Sample Location	USCS Symbol	DESCRIPTION OF SUBSURFACE MATERIALS
0			Brown silty fine SAND (pocket of light green soft silty clay like material)
			Dark gray and brown silty fine SAND with clay and gravel with black streaks
			Brown fine SAND with silt and black streaks
5			Gray with pockets of black fine SAND with silt
			Gray fine to medium SAND with silt
10			Test pit completed at 9.5' on 8-21-01 Water level at 9.0 feet on 8-21-01 Test pit backfilled on 8-21-01 No free product observed
15			

Johnson Controls, INC. - 20209-019-121 - Fowlerville, MI

URS

JOB NO. 20209-019-121

Johnson Controls, INC.

Former Stanley Tools
Fowlerville, MI

TEST PIT
B-TP-1

Depth (Feet)	Sample Location	USCS Symbol	DESCRIPTION OF SUBSURFACE MATERIALS
0			Dark brown and black silty fine to medium SAND with gravel, petroleum odor (FILL)
5			Gray fine SAND, wet, with oil sheen (top of clay pipe at 5.0 ft)
10			
15			

Test pit completed at 6.0' on 8-21-01
Water level at 5.5 feet on 8-21-01
Test pit backfilled on 8-21-01
No free product observed

Johnson Controls, INC. ..\209-019-121 - Fowlerville, MI

URS

JOB NO. 20209-019-121

Johnson Controls, INC.

Former Stanley Tools
Fowlerville, MI

TEST PIT
B-TP-2

Depth (Feet)	Sample Location	USCS Symbol	DESCRIPTION OF SUBSURFACE MATERIALS
0			Brown fine SAND with silt
			grades with gray streaks
			(sample collected at 4') grades with dark gray pockets (slight petroleum odor)
5			(sample collected at 5') grades with pockets of light greenish-gray silty clay like material, soft
			Test pit completed at 6.0' on 8-21-01 Test pit backfilled when caving occured No water encountered No free product observed
10			
15			

Sample collected for laboratory analysis

J9-019-121 - Fowlerville, MI

Johnson Controls, INC.

URS

JOB NO. 20209-019-121

Johnson Controls, INC.

Former Stanley Tools
Fowlerville, MI

TEST PIT
B-TP-3

Depth (Feet)	Sample Location	USCS Symbol	DESCRIPTION OF SUBSURFACE MATERIALS
0			Brown with seams of dark gray and black fine SAND pockets of light green to greenish-gray clay like material, soft
5			Gray and brown silty SAND
			Gray silty CLAY
			Gray fine SAND, wet, with oil sheen and slight petroleum odor
10			Test pit completed at 9.5' on 8-21-01 Test pit backfilled on 8-21-01 Water encountered at 9.0' on 8-21-01 No free product observed
15			

Johnson Controls, INC. 209-019-121 - Fowlerville, MI

URS

JOB NO. 20209-019-121

Johnson Controls, INC.

Former Stanley Tools
Fowlerville, MI

TEST PIT
B-TP-4

Depth (Feet)	Sample Location	USCS Symbol	DESCRIPTION OF SUBSURFACE MATERIALS
0			Brown fine SAND with silt
			Gray with black streaks silty fine SAND, slight petroleum odor
5			Black fine to medium SAND with silt
			Black fine to coarse SAND, wet
			Test pit completed at 7.5' on 8-21-2001 due to caving Water level at 7.0' on 8-21-2001 Test pit backfilled on 8-21-2001 No free product observed
10			
15			

Johnson Controls, INC. ...209-019-121 - Fowlerville, MI

URS

JOB NO. 20209-019-121

Johnson Controls, INC.

Former Stanley Tools
Fowlerville, MI

TEST PIT
C-TP-1

Depth (Feet)	Sample Location	USCS Symbol	DESCRIPTION OF SUBSURFACE MATERIALS
0			Brown silty fine SAND
			Black dark gray and brown silty fine SAND with clay, petroleum odor
5			Gray silty CLAY with black streaks, petroleum odor
			Gray fine SAND, wet, slight petroleum odor
10			Test pit completed at 9.5' on 8-21-01 Water level at 9.0' on 8-21-2001 Test pit backfilled on 8-21-2001 No free product observed
15			

Johnson Controls, INC. _09-019-121 - Fowlerville, MI

URS

JOB NO. 20209-019-121

Johnson Controls, INC.

Former Stanley Tools
Fowlerville, MI

TEST PIT
C-TP-2

Depth (Feet)	Sample Location	USCS Symbol	DESCRIPTION OF SUBSURFACE MATERIALS
0			Brown silty fine to medium SAND with clay (FILL)
			grades black
			Brown silty fine to medium SAND with some coarse sand
			12-15 diameter inch clay tile, petroleum odor, (grayish staining around pipe)
5			
			Test pit completed at 6' on 8-21-2001 Water level at 4.5' on 8-21-2001 Test pit backfilled on 8-21-2001 No free product observed
10			
15			

Johnson Controls, INC. ...J209-019-121 - Fowlerville, MI

URS

JOB NO. 20209-019-121

Johnson Controls, INC.

Former Stanley Tools
Fowlerville, MI

TEST PIT
E-TP-1

Depth (Feet)	Sample Location	USCS Symbol	DESCRIPTION OF SUBSURFACE MATERIALS
0			Brown silty fine to medium SAND with clay and misc. debris (FILL)
	■		Brown and gray with black streaks fine sandy SILT, petroleum odor (sample collected at 4')
5			Gray silty fine SAND with soft clay, slight petroleum odor
			Brown and gray silty fine to medium SAND
10			Test pit completed at 9.5' on 8-21-2001 Water level at 9.0' on 8-21-2001 Test pit backfilled on 8-21-2001 No free product observed
15			

■ Sample collected for laboratory analysis

Johnson Controls, INC. 20209-019-121 - Fowlerville, MI

URS

JOB NO. 20209-019-121

Johnson Controls, INC.

Former Stanley Tools
Fowlerville, MI

TEST PIT
E-TP-2

APPENDIX B

LABORATORY REPORTS
OIL SEEPS AND TEST PIT SAMPLES

SEVERN TRENT SERVICES

STL Denver
4955 Yarrow Street
Arvada, CO 80002-4517

Tel: 303 736 0100
Fax: 303 431 7171
www.stl-inc.com

ANALYTICAL REPORT

Johnson Controls
Fowlersville, MI

Lot # D1H200248

Mike Wagner

URS Dames & Moore

STL DENVER

Linda L. Benkers
Project Manager

September 17, 2001

Table Of Contents

Standard Deliverable

Report Contents

- Table of Contents
- Case Narrative
- Executive Summary – Detection Highlights
- Analytical Method Summary
- Method/ Analyst Summary
- Sample Summary
- Analytical Results by Sample
- QC Data Association Summary
- Chain-of-Custody

Total Number of Pages 78

Project Narrative
(D1H200248)

On August 18, 2000, the STL Denver laboratory received four samples and one trip blank from URS Dames and Moore. This report presents the analytical results as well as supporting information to aid in the evaluation and interpretation of the data.

With the exception of the below mentioned anomalies, standard analytical protocols were followed in the analysis of the samples. All laboratory QC samples analyzed in conjunction with the samples in this project were within established control limits.

Sample Receiving

The samples were received at the laboratory in good condition at 2.8°C.

GC/MS Volatiles, SW846 8260B

Samples E2-S (PIPE) and E2-S (B) were analyzed at a dilution due to high concentrations of target compounds in the samples. The reporting limits have been adjusted accordingly. Please note that for sample E2-S(B), 6.27 grams of sample was used during preparation instead of the normal 5 grams; therefore, the dilution factor of 0.79 is correct as reported.

Sample E2-S (B) demonstrated recovery of the internal standard 1,4-dichlorobenzene-d4 below control limits. This in turn caused high recovery of the surrogate 4-bromofluorobenze. Reanalysis confirmed the results and the raw data indicates matrix interference.

The MS associated with batch 1235279, but performed on an unrelated sample, demonstrated a recovery outside established control limits for trichloroethene. The precision (RPD's) for benzene, toluene, and trichloroethene were also outside control limits. The associated LCS and method blank are in control; therefore these anomalies are attributed to matrix interference.

The MS/MSD associated with batch 1235386, but performed on an unrelated sample, demonstrated recoveries outside control limits for 1,1-dichloroethene, chlorobenzene, toluene, and trichloroethene. The associated LCS and method blank are in control; therefore these anomalies are attributed to matrix interference and no further corrective action was taken.

GC/MS Semi-Volatiles, SW846 8270C

No anomalies were observed.

GC Semi-Volatiles, SW846 8082

The LCS/LCSD demonstrated precision (RPD) outside control limits for Aroclor 1016 and Aroclor 1260. The LCS and LCSD recoveries were in control; therefore no further corrective action was taken.

Metals, SW846 6010B, 7471A

The MS/MSD performed on sample E1-N (B) demonstrated recoveries outside control limits for cadmium, chromium and lead. The precision (RPD) for chromium was also outside control limits. The associated LCS and method blank are in control; therefore these anomalies are attributed to matrix interference and no further corrective action was taken.

EXECUTIVE SUMMARY - Detection Highlights

D1H200248

PARAMETER	RESULT	REPORTING LIMIT	UNITS	ANALYTICAL METHOD
E1-N(B) 08/17/01 10:30 001				
Aroclor 1016	95	39	ug/kg	SW846 8082
Aroclor 1242	100	39	ug/kg	SW846 8082
Mercury	0.0083 B	0.039	mg/kg	SW846 7471A
Arsenic	2.8	1.2	mg/kg	SW846 6010B
Lead	3.2	0.95	mg/kg	SW846 6010B
Barium	55.1	1.2	mg/kg	SW846 6010B
Chromium	10.9	1.2	mg/kg	SW846 6010B
Chlorobenzene	6.5	5.9	ug/kg	SW846 8260B
1,2-Dichlorobenzene	2.2 J	5.9	ug/kg	SW846 8260B
Percent Moisture	15.6	0.10	%	MCAWW 160.3 MOD
E1-N(N4^) 08/17/01 10:45 002				
Arsenic	7.5	1.2	mg/kg	SW846 6010B
Lead	1.1	0.96	mg/kg	SW846 6010B
Barium	10.1	1.2	mg/kg	SW846 6010B
Chromium	3.4	1.2	mg/kg	SW846 6010B
Chlorobenzene	7.1	6.0	ug/kg	SW846 8260B
Percent Moisture	16.3	0.10	%	MCAWW 160.3 MOD
E2-S(PIPE) 08/17/01 15:45 003				
Aroclor 1248	28 J	42	ug/kg	SW846 8082
Mercury	0.058	0.042	mg/kg	SW846 7471A
Arsenic	7.3	1.3	mg/kg	SW846 6010B
Lead	9.6	1.0	mg/kg	SW846 6010B
Barium	91.8	1.3	mg/kg	SW846 6010B
Chromium	11.6	1.3	mg/kg	SW846 6010B
Benzo(a)pyrene	150 J	420	ug/kg	SW846 8270C
Acetone	180	40	ug/kg	SW846 8260B
2-Butanone (MEK)	48	40	ug/kg	SW846 8260B
1,1-Dichloroethane	24	10	ug/kg	SW846 8260B
cis-1,2-Dichloroethene	2.5 J	5.1	ug/kg	SW846 8260B
trans-1,2-Dichloroethene	3.3 J	5.1	ug/kg	SW846 8260B
1,2-Dichloroethene (total)	5.8 J	10	ug/kg	SW846 8260B
Vinyl chloride	6.3 J	20	ug/kg	SW846 8260B
Percent Moisture	20.8	0.10	%	MCAWW 160.3 MOD

(Continued on next page)

EXECUTIVE SUMMARY - Detection Highlights

D1H200248

PARAMETER	RESULT	REPORTING LIMIT	UNITS	ANALYTICAL METHOD
E2-S(B) 08/17/01 15:55 004				
Aroclor 1254	100	38	ug/kg	SW846 8082
Aroclor 1260	99	38	ug/kg	SW846 8082
Mercury	0.0062 B	0.038	mg/kg	SW846 7471A
Arsenic	4.6	1.2	mg/kg	SW846 6010B
Lead	4.8	0.93	mg/kg	SW846 6010B
Barium	39.0	1.2	mg/kg	SW846 6010B
Chromium	12.3	1.2	mg/kg	SW846 6010B
Chloroethane	1.3 J	9.3	ug/kg	SW846 8260B
1,1-Dichloroethane	43	4.6	ug/kg	SW846 8260B
cis-1,2-Dichloroethene	19	2.3	ug/kg	SW846 8260B
trans-1,2-Dichloroethene	12	2.3	ug/kg	SW846 8260B
1,2-Dichloroethene (total)	31	4.6	ug/kg	SW846 8260B
Vinyl chloride	41	9.3	ug/kg	SW846 8260B
Percent Moisture	13.8	0.10	%	MCAWW 160.3 MOD
TRIP BLANK 08/17/01 005				
Acetone	2.8 J	10	ug/L	SW846 8260B

METHODS SUMMARY

D1H200248

PARAMETER	ANALYTICAL METHOD	PREPARATION METHOD
Inductively Coupled Plasma (ICP) Metals	SW846 6010B	SW846 3050B
Mercury in Solid Waste (Manual Cold-Vapor)	SW846 7471A	SW846 7471A
Percent Moisture	MCAWW 160.3 MOD	MCAWW 160.3 MOD
PCBs by SW-846 8082	SW846 8082	SW846 3550
Semivolatile Organic Compounds by GC/MS	SW846 8270C	SW846 3550B
Trace Inductively Coupled Plasma (ICP) Metals	SW846 6010B	SW846 3050B
Volatile Organics by GC/MS	SW846 8260B	SW846 5030B/826
Volatile Organics by GC/MS	SW846 8260B	SW846 5035

References:

MCAWW "Methods for Chemical Analysis of Water and Wastes", EPA-600/4-79-020, March 1983 and subsequent revisions.

SW846 "Test Methods for Evaluating Solid Waste, Physical/Chemical Methods", Third Edition, November 1986 and its updates.

METHOD / ANALYST SUMMARY

D1H200248

ANALYTICAL METHOD	ANALYST	ANALYST ID
MCAWW 160.3 MOD	Duane Allee	001470
SW846 6010B	Lynn-Anne Trudell	006645
SW846 7471A	Thomas Lill	006929
SW846 8082	Karla Garcia	000205
SW846 8260B	Dan Appelhans	001008
SW846 8260B	Mark McDaniel	000998
SW846 8270C	Joann Peterson	011674

References:

MCAWW "Methods for Chemical Analysis of Water and Wastes", EPA-600/4-79-020, March 1983 and subsequent revisions.

SW846 "Test Methods for Evaluating Solid Waste, Physical/Chemical Methods", Third Edition, November 1986 and its updates.

SAMPLE SUMMARY

D1H200248

WO #	SAMPLE#	CLIENT SAMPLE ID	SAMPLED DATE	SAMP TIME
EH9NR	001	E1-N(B)	08/17/01	10:30
EH9N0	002	E1-N(N4`)	08/17/01	10:45
EH9N2	003	E2-S(PIPE)	08/17/01	15:45
EH9N6	004	E2-S(B)	08/17/01	15:55
EH9N7	005	TRIP BLANK	08/17/01	

NOTE(S):

- The analytical results of the samples listed above are presented on the following pages.
- All calculations are performed before rounding to avoid round-off errors in calculated results.
- Results noted as "ND" were not detected at or above the stated limit.
- This report must not be reproduced, except in full, without the written approval of the laboratory.
- Results for the following parameters are never reported on a dry weight basis: color, corrosivity, density, flashpoint, ignitability, layers, odor, paint filter test, pH, porosity pressure, reactivity, redox potential, specific gravity, spot tests, solids, solubility, temperature, viscosity, and weight.

URS

Client Sample ID: E1-N(B)

GC/MS Volatiles

Lot-Sample #...: D1H200248-001 Work Order #...: EH9NR1AC Matrix.....: SO
Date Sampled...: 08/17/01 10:30 Date Received..: 08/18/01
Prep Date.....: 08/18/01 Analysis Date..: 08/22/01
Prep Batch #...: 1235386 Analysis Time..: 19:00
Dilution Factor: 1

Method.....: SW846 8260B

PARAMETER	RESULT	REPORTING LIMIT	UNITS	MDL
Acetone	ND	24	ug/kg	4.1
Acrolein	ND	120	ug/kg	45
Acrylonitrile	ND	120	ug/kg	7.0
Benzene	ND	5.9	ug/kg	0.59
Bromodichloromethane	ND	5.9	ug/kg	0.59
Bromoform	ND	5.9	ug/kg	0.59
Bromomethane	ND	12	ug/kg	0.59
2-Butanone (MEK)	ND	24	ug/kg	2.8
Carbon disulfide	ND	5.9	ug/kg	0.62
Carbon tetrachloride	ND	5.9	ug/kg	0.64
Chlorobenzene	**6.5**	**5.9**	**ug/kg**	**1.2**
Chloroethane	ND	12	ug/kg	0.59
Chloroform	ND	5.9	ug/kg	0.59
Chloromethane	ND	12	ug/kg	1.1
Dibromochloromethane	ND	5.9	ug/kg	0.59
Dibromomethane	ND	5.9	ug/kg	0.59
1,2-Dibromoethane (EDB)	ND	5.9	ug/kg	0.59
1,2-Dichlorobenzene	**2.2 J**	**5.9**	**ug/kg**	**1.9**
1,3-Dichlorobenzene	ND	5.9	ug/kg	2.5
1,4-Dichlorobenzene	ND	5.9	ug/kg	2.1
Dichlorodifluoromethane	ND	12	ug/kg	0.73
1,1-Dichloroethane	ND	5.9	ug/kg	0.77
1,2-Dichloroethane	ND	5.9	ug/kg	0.66
1,1-Dichloroethene	ND	5.9	ug/kg	0.84
cis-1,2-Dichloroethene	ND	3.0	ug/kg	0.66
trans-1,2-Dichloroethene	ND	3.0	ug/kg	0.91
1,2-Dichloroethene (total)	ND	5.9	ug/kg	1.6
1,2-Dichloropropane	ND	5.9	ug/kg	0.59
cis-1,3-Dichloropropene	ND	5.9	ug/kg	0.85
trans-1,3-Dichloropropene	ND	5.9	ug/kg	0.63
trans-1,4-Dichloro-2-butene	ND	5.9	ug/kg	1.2
1,4-Dioxane	ND	590	ug/kg	51
Ethanol	ND	590	ug/kg	55
Ethylbenzene	ND	5.9	ug/kg	1.4
Ethyl methacrylate	ND	5.9	ug/kg	0.71
Hexane	ND	5.9	ug/kg	0.97

(Continued on next page)

URS

Client Sample ID: E1-N(B)

GC/MS Volatiles

Lot-Sample #...: D1H200248-001 Work Order #...: EH9NR1AC Matrix.....: SO

PARAMETER	RESULT	REPORTING LIMIT	UNITS	MDL
2-Hexanone	ND	24	ug/kg	2.0
Iodomethane	ND	5.9	ug/kg	0.59
Methylene chloride	ND	5.9	ug/kg	0.59
4-Methyl-2-pentanone	ND	24	ug/kg	1.4
Methyl tert-butyl ether	ND	5.9	ug/kg	0.59
Styrene	ND	5.9	ug/kg	1.5
1,1,2,2-Tetrachloroethane	ND	5.9	ug/kg	0.59
tert-Butyl alcohol	ND	240	ug/kg	15
Tetrachloroethene	ND	5.9	ug/kg	1.2
Tetrahydrofuran	ND	24	ug/kg	1.4
Toluene	ND	5.9	ug/kg	0.96
1,1,1-Trichloroethane	ND	5.9	ug/kg	0.59
1,1,2-Trichloroethane	ND	5.9	ug/kg	1.2
Trichloroethene	ND	5.9	ug/kg	0.73
Trichlorofluoromethane	ND	12	ug/kg	0.65
1,2,3-Trichloropropane	ND	5.9	ug/kg	1.3
Trichlorotrifluoroethane	ND	24	ug/kg	0.79
Vinyl acetate	ND	12	ug/kg	5.2
Vinyl chloride	ND	12	ug/kg	0.92
Xylenes (total)	ND	5.9	ug/kg	3.7
Dichlorofluoromethane	ND	12	ug/kg	1.3
Ethyl ether	ND	12	ug/kg	0.59
Acetonitrile	ND	120	ug/kg	20
Chloroprene	ND	5.9	ug/kg	0.98
Isopropyl ether	ND	59	ug/kg	3.0
Propionitrile	ND	24	ug/kg	7.4
Ethyl acetate	ND	12	ug/kg	3.9
Methacrylonitrile	ND	59	ug/kg	5.9
Isobutyl alcohol	ND	240	ug/kg	14
Methyl methacrylate	ND	5.9	ug/kg	1.5
n-Butanol	ND	240	ug/kg	15
2-Nitropropane	ND	12	ug/kg	2.9
1,1,1,2-Tetrachloroethane	ND	5.9	ug/kg	1.5
Cyclohexanone	ND	300	ug/kg	13
Isopropylbenzene	ND	5.9	ug/kg	1.6
1,2-Dibromo-3-chloropropane (DBCP)	ND	12	ug/kg	0.81

SURROGATE	PERCENT RECOVERY	RECOVERY LIMITS
Dibromofluoromethane	108	(80 - 120)
1,2-Dichloroethane-d4	109	(79 - 125)
4-Bromofluorobenzene	97	(71 - 132)
Toluene-d8	92	(77 - 117)

(Continued on next page)

URS

Client Sample ID: E1-N(B)

GC/MS Volatiles

Lot-Sample #...: D1H200248-001 Work Order #...: EH9NR1AC Matrix.....: SO

NOTE(S):

Results and reporting limits have been adjusted for dry weight.

J Estimated result. Result is less than RL.

URS

Client Sample ID: E1-N(B)

GC/MS Semivolatiles

Lot-Sample #...: D1H200248-001 Work Order #...: EH9NR1AD Matrix.....: SO
Date Sampled...: 08/17/01 10:30 Date Received..: 08/18/01
Prep Date.....: 08/21/01 Analysis Date..: 08/27/01
Prep Batch #...: 1233169 Analysis Time..: 21:09
Dilution Factor: 1

Method.....: SW846 8270C

PARAMETER	RESULT	REPORTING LIMIT	UNITS	MDL
Anthracene	ND	390	ug/kg	92
Acenaphthene	ND	390	ug/kg	55
Acenaphthylene	ND	390	ug/kg	40
Benzo(a)anthracene	ND	390	ug/kg	46
Benzo(a)pyrene	ND	390	ug/kg	110
Chrysene	ND	390	ug/kg	63
Dibenz(a,h)anthracene	ND	390	ug/kg	56
Benzo(b)fluoranthene	ND	390	ug/kg	120
Benzo(ghi)perylene	ND	390	ug/kg	83
Benzo(k)fluoranthene	ND	390	ug/kg	110
Fluoranthene	ND	390	ug/kg	100
Fluorene	ND	390	ug/kg	90
Phenanthrene	ND	390	ug/kg	44
rene	ND	390	ug/kg	47
Indeno(1,2,3-cd)pyrene	ND	390	ug/kg	57
Naphthalene	ND	390	ug/kg	83

SURROGATE	PERCENT RECOVERY	RECOVERY LIMITS
2-Fluorophenol	56	(34 - 97)
Phenol-d5	54	(39 - 90)
Nitrobenzene-d5	48	(33 - 97)
2-Fluorobiphenyl	55	(39 - 91)
2,4,6-Tribromophenol	55	(29 - 95)
Terphenyl-d14	62	(30 - 102)

NOTE(S):

Results and reporting limits have been adjusted for dry weight.

URS

Client Sample ID: E1-N(B)

GC Semivolatiles

Lot-Sample #...: D1H200248-001 Work Order #...: EH9NR1AE Matrix.....: SO
Date Sampled...: 08/17/01 10:30 Date Received..: 08/18/01
Prep Date.....: 08/21/01 Analysis Date..: 08/30/01
Prep Batch #...: 1233159 Analysis Time..: 11:37
Dilution Factor: 1
Method.....: SW846 8082

PARAMETER	RESULT	REPORTING LIMIT	UNITS	MDL
Aroclor 1016	**95**	**39**	**ug/kg**	**12**
Aroclor 1221	ND	39	ug/kg	8.2
Aroclor 1232	ND	39	ug/kg	10
Aroclor 1242	**100**	**39**	**ug/kg**	**9.9**
Aroclor 1248	ND	39	ug/kg	7.1
Aroclor 1254	ND	39	ug/kg	7.2
Aroclor 1260	ND	39	ug/kg	7.1

SURROGATE	PERCENT RECOVERY	RECOVERY LIMITS
Decachlorobiphenyl	68	(62 - 145)
Tetrachloro-m-xylene	75	(60 - 130)

OTE(S):

ults and reporting limits have been adjusted for dry weight.

URS

Client Sample ID: E1-N(B)

TOTAL Metals

Lot-Sample #...: D1H200248-001 Matrix.....: SO
Date Sampled...: 08/17/01 10:30 Date Received..: 08/18/01

PARAMETER	RESULT	REPORTING LIMIT	UNITS	METHOD	PREPARATION-ANALYSIS DATE	WORK ORDER #
Prep Batch #...: 1234204						
Mercury	0.0083 B	0.039	mg/kg	SW846 7471A	09/04/01	EH9NR1AQ
		Dilution Factor: 1		Analysis Time..: 19:21	MDL.....: 0.0031	
Prep Batch #...: 1235338						
Silver	ND	1.2	mg/kg	SW846 6010B	08/23-09/05/01	EH9NR1AM
		Dilution Factor: 1		Analysis Time..: 22:24	MDL.....: 0.084	
Arsenic	2.8	1.2	mg/kg	SW846 6010B	08/23-09/07/01	EH9NR1AH
		Dilution Factor: 1		Analysis Time..: 21:56	MDL.....: 0.34	
Barium	55.1	1.2	mg/kg	SW846 6010B	08/23-09/05/01	EH9NR1AF
		Dilution Factor: 1		Analysis Time..: 22:24	MDL.....: 0.059	
Cadmium	ND	0.59	mg/kg	SW846 6010B	09/11-09/12/01	EH9NR1AJ
		Dilution Factor: 1		Analysis Time..: 12:42	MDL.....: 0.039	
Chromium	10.9	1.2	mg/kg	SW846 6010B	08/23-09/05/01	EH9NR1AG
		Dilution Factor: 1		Analysis Time..: 22:24	MDL.....: 0.27	
Lead	3.2	0.95	mg/kg	SW846 6010B	09/11-09/12/01	EH9NR1AK
		Dilution Factor: 1		Analysis Time..: 12:42	MDL.....: 0.25	
Selenium	ND	1.5	mg/kg	SW846 6010B	08/23-09/05/01	EH9NR1AL
		Dilution Factor: 1		Analysis Time..: 22:24	MDL.....: 0.46	

NOTE(S):

B Estimated result. Result is less than RL.

Results and reporting limits have been adjusted for dry weight.

URS

Client Sample ID: E1-N(B)

General Chemistry

Lot-Sample #...: D1H200248-001 Work Order #...: EH9NR Matrix.....: SO
Date Sampled...: 08/17/01 10:30 Date Received..: 08/18/01

PARAMETER	RESULT	RL	UNITS	METHOD	PREPARATION-ANALYSIS DATE	PREP BATCH #
Percent Moisture	15.6	0.10	%	MCAWW 160.3 MOD	08/29/01	1242356

Dilution Factor: 1 Analysis Time..: 15:00 MDL.....:

URS

Client Sample ID: E1-N(N4`)

GC/MS Volatiles

Lot-Sample #...: D1H200248-002 Work Order #...: EH9N01AC Matrix.....: SO
Date Sampled...: 08/17/01 10:45 Date Received..: 08/18/01
Prep Date.....: 08/18/01 Analysis Date..: 08/22/01
Prep Batch #...: 1235386 Analysis Time..: 19:26
Dilution Factor: 1

Method.....: SW846 8260B

PARAMETER	RESULT	REPORTING LIMIT	UNITS	MDL
Acetone	ND	24	ug/kg	4.1
Acrolein	ND	120	ug/kg	46
Acrylonitrile	ND	120	ug/kg	7.1
Benzene	ND	6.0	ug/kg	0.60
Bromodichloromethane	ND	6.0	ug/kg	0.60
Bromoform	ND	6.0	ug/kg	0.60
Bromomethane	ND	12	ug/kg	0.60
2-Butanone (MEK)	ND	24	ug/kg	2.8
Carbon disulfide	ND	6.0	ug/kg	0.62
Carbon tetrachloride	ND	6.0	ug/kg	0.65
Chlorobenzene	**7.1**	**6.0**	**ug/kg**	**1.2**
Chloroethane	ND	12	ug/kg	0.60
Chloroform	ND	6.0	ug/kg	0.60
Chloromethane	ND	12	ug/kg	1.1
Dibromochloromethane	ND	6.0	ug/kg	0.60
Dibromomethane	ND	6.0	ug/kg	0.60
1,2-Dibromoethane (EDB)	ND	6.0	ug/kg	0.60
1,2-Dichlorobenzene	ND	6.0	ug/kg	2.0
1,3-Dichlorobenzene	ND	6.0	ug/kg	2.5
1,4-Dichlorobenzene	ND	6.0	ug/kg	2.1
Dichlorodifluoromethane	ND	12	ug/kg	0.74
1,1-Dichloroethane	ND	6.0	ug/kg	0.78
1,2-Dichloroethane	ND	6.0	ug/kg	0.67
1,1-Dichloroethene	ND	6.0	ug/kg	0.85
cis-1,2-Dichloroethene	ND	3.0	ug/kg	0.67
trans-1,2-Dichloroethene	ND	3.0	ug/kg	0.92
1,2-Dichloroethene (total)	ND	6.0	ug/kg	1.6
1,2-Dichloropropane	ND	6.0	ug/kg	0.60
cis-1,3-Dichloropropene	ND	6.0	ug/kg	0.86
trans-1,3-Dichloropropene	ND	6.0	ug/kg	0.63
trans-1,4-Dichloro-2-butene	ND	6.0	ug/kg	1.2
1,4-Dioxane	ND	600	ug/kg	51
Ethanol	ND	600	ug/kg	56
Ethylbenzene	ND	6.0	ug/kg	1.4
Ethyl methacrylate	ND	6.0	ug/kg	0.72
Hexane	ND	6.0	ug/kg	0.98

(Continued on next page)

URS

Client Sample ID: E1-N(N4^)

GC/MS Volatiles

Lot-Sample #...: D1H200248-002 Work Order #...: EH9N01AC Matrix.....: SO

PARAMETER	RESULT	REPORTING LIMIT	UNITS	MDL
2-Hexanone	ND	24	ug/kg	2.0
Iodomethane	ND	6.0	ug/kg	0.60
Methylene chloride	ND	6.0	ug/kg	0.60
4-Methyl-2-pentanone	ND	24	ug/kg	1.4
Methyl tert-butyl ether	ND	6.0	ug/kg	0.60
Styrene	ND	6.0	ug/kg	1.5
1,1,2,2-Tetrachloroethane	ND	6.0	ug/kg	0.60
tert-Butyl alcohol	ND	240	ug/kg	15
Tetrachloroethene	ND	6.0	ug/kg	1.2
Tetrahydrofuran	ND	24	ug/kg	1.5
Toluene	ND	6.0	ug/kg	0.97
1,1,1-Trichloroethane	ND	6.0	ug/kg	0.60
1,1,2-Trichloroethane	ND	6.0	ug/kg	1.2
Trichloroethene	ND	6.0	ug/kg	0.74
Trichlorofluoromethane	ND	12	ug/kg	0.66
1,2,3-Trichloropropane	ND	6.0	ug/kg	1.4
Trichlorotrifluoroethane	ND	24	ug/kg	0.80
Vinyl acetate	ND	12	ug/kg	5.2
nyl chloride	ND	12	ug/kg	0.93
xylenes (total)	ND	6.0	ug/kg	3.7
Dichlorofluoromethane	ND	12	ug/kg	1.3
Ethyl ether	ND	12	ug/kg	0.60
Acetonitrile	ND	120	ug/kg	20
Chloroprene	ND	6.0	ug/kg	0.99
Isopropyl ether	ND	60	ug/kg	3.0
Propionitrile	ND	24	ug/kg	7.5
Ethyl acetate	ND	12	ug/kg	3.9
Methacrylonitrile	ND	60	ug/kg	6.0
Isobutyl alcohol	ND	240	ug/kg	14
Methyl methacrylate	ND	6.0	ug/kg	1.5
n-Butanol	ND	240	ug/kg	15
2-Nitropropane	ND	12	ug/kg	2.9
1,1,1,2-Tetrachloroethane	ND	6.0	ug/kg	1.6
Cyclohexanone	ND	300	ug/kg	13
Isopropylbenzene	ND	6.0	ug/kg	1.6
1,2-Dibromo-3-chloropropane (DBCP)	ND	12	ug/kg	0.81

SURROGATE	PERCENT RECOVERY	RECOVERY LIMITS
Dibromofluoromethane	98	(80 - 120)
1,2-Dichloroethane-d4	96	(79 - 125)
4-Bromofluorobenzene	90	(71 - 132)
Toluene-d8	82	(77 - 117)

TE(S):

Results and reporting limits have been adjusted for dry weight.

URS

Client Sample ID: E1-N(N4`)

GC/MS Semivolatiles

Lot-Sample #...: D1H200248-002 Work Order #...: EH9N01AD Matrix.....: SO
Date Sampled...: 08/17/01 10:45 Date Received..: 08/18/01
Prep Date.....: 08/21/01 Analysis Date..: 08/27/01
Prep Batch #...: 1233169 Analysis Time..: 21:34
Dilution Factor: 1

Method.....: SW846 8270C

PARAMETER	RESULT	REPORTING LIMIT	UNITS	MDL
Anthracene	ND	390	ug/kg	93
Acenaphthene	ND	390	ug/kg	55
Acenaphthylene	ND	390	ug/kg	41
Benzo(a)anthracene	ND	390	ug/kg	47
Benzo(a)pyrene	ND	390	ug/kg	110
Chrysene	ND	390	ug/kg	64
Dibenz(a,h)anthracene	ND	390	ug/kg	56
Benzo(b)fluoranthene	ND	390	ug/kg	120
Benzo(ghi)perylene	ND	390	ug/kg	84
Benzo(k)fluoranthene	ND	390	ug/kg	110
Fluoranthene	ND	390	ug/kg	100
Fluorene	ND	390	ug/kg	91
Phenanthrene	ND	390	ug/kg	44
rene	ND	390	ug/kg	48
ndeno(1,2,3-cd)pyrene	ND	390	ug/kg	57
Naphthalene	ND	390	ug/kg	84

SURROGATE	PERCENT RECOVERY	RECOVERY LIMITS
2-Fluorophenol	52	(34 - 97)
Phenol-d5	50	(39 - 90)
Nitrobenzene-d5	45	(33 - 97)
2-Fluorobiphenyl	47	(39 - 91)
2,4,6-Tribromophenol	48	(29 - 95)
Terphenyl-d14	52	(30 - 102)

NOTE(S):

Results and reporting limits have been adjusted for dry weight.

URS

Client Sample ID: E1-N(N4`)

GC Semivolatiles

Lot-Sample #...: D1H200248-002 Work Order #...: EH9N01AE Matrix.....: SO
Date Sampled...: 08/17/01 10:45 Date Received..: 08/18/01
Prep Date.....: 08/21/01 Analysis Date..: 08/29/01
Prep Batch #...: 1233159 Analysis Time..: 20:01
Dilution Factor: 1

Method.....: SW846 8082

PARAMETER	RESULT	REPORTING LIMIT	UNITS	MDL
Aroclor 1016	ND	39	ug/kg	12
Aroclor 1221	ND	39	ug/kg	8.3
Aroclor 1232	ND	39	ug/kg	10
Aroclor 1242	ND	39	ug/kg	10
Aroclor 1248	ND	39	ug/kg	7.2
Aroclor 1254	ND	39	ug/kg	7.3
Aroclor 1260	ND	39	ug/kg	7.1

SURROGATE	PERCENT RECOVERY	RECOVERY LIMITS
Decachlorobiphenyl	87	(62 - 145)
Tetrachloro-m-xylene	95	(60 - 130)

NOTE(S):

Results and reporting limits have been adjusted for dry weight.

URS

Client Sample ID: E1-N(N4`)

TOTAL Metals

Lot-Sample #...: D1H200248-002 Matrix.....: SO
Date Sampled...: 08/17/01 10:45 Date Received..: 08/18/01

PARAMETER	RESULT	REPORTING LIMIT	UNITS	METHOD	PREPARATION-ANALYSIS DATE	WORK ORDER #
Prep Batch #...: 1234204						
Mercury	ND	0.039	mg/kg	SW846 7471A	09/04/01	EH9N01AN
		Dilution Factor: 1		Analysis Time..: 19:26	MDL.....: 0.0031	
Prep Batch #...: 1235338						
Silver	ND	1.2	mg/kg	SW846 6010B	08/23-09/05/01	EH9N01AM
		Dilution Factor: 1		Analysis Time..: 22:45	MDL.....: 0.085	
Arsenic	7.5	1.2	mg/kg	SW846 6010B	08/23-09/07/01	EH9N01AH
		Dilution Factor: 1		Analysis Time..: 22:17	MDL.....: 0.35	
Barium	10.1	1.2	mg/kg	SW846 6010B	08/23-09/05/01	EH9N01AF
		Dilution Factor: 1		Analysis Time..: 22:45	MDL.....: 0.060	
Cadmium	ND	0.60	mg/kg	SW846 6010B	09/11-09/12/01	EH9N01AJ
		Dilution Factor: 1		Analysis Time..: 13:00	MDL.....: 0.039	
Cnromium	3.4	1.2	mg/kg	SW846 6010B	08/23-09/05/01	EH9N01AG
		Dilution Factor: 1		Analysis Time..: 22:45	MDL.....: 0.27	
Lead	1.1	0.96	mg/kg	SW846 6010B	09/11-09/12/01	EH9N01AK
		Dilution Factor: 1		Analysis Time..: 13:00	MDL.....: 0.25	
Selenium	ND	1.6	mg/kg	SW846 6010B	08/23-09/05/01	EH9N01AL
		Dilution Factor: 1		Analysis Time..: 22:45	MDL.....: 0.47	

NOTE(S):

Results and reporting limits have been adjusted for dry weight.

URS

Client Sample ID: E1-N(N4~)

General Chemistry

Lot-Sample #...: D1H200248-002 Work Order #...: EH9N0 Matrix.....: SO
Date Sampled...: 08/17/01 10:45 Date Received..: 08/18/01

PARAMETER	RESULT	RL	UNITS	METHOD	PREPARATION-ANALYSIS DATE	PREP BATCH #
Percent Moisture	16.3	0.10	%	MCAWW 160.3 MOD	08/29/01	1242356

Dilution Factor: 1 Analysis Time..: 15:00 MDL.....:

URS

Client Sample ID: E2-S(PIPE)

GC/MS Volatiles

Lot-Sample #...: D1H200248-003 Work Order #...: EH9N21AC Matrix.....: SO
Date Sampled...: 08/17/01 15:45 Date Received..: 08/18/01
Prep Date.....: 08/18/01 Analysis Date..: 08/22/01
Prep Batch #...: 1235386 Analysis Time..: 19:52
Dilution Factor: 1.6

Method.....: SW846 8260B

PARAMETER	RESULT	REPORTING LIMIT	UNITS	MDL
Acetone	**180**	**40**	**ug/kg**	**6.9**
Acrolein	ND	200	ug/kg	77
Acrylonitrile	ND	200	ug/kg	12
Benzene	ND	10	ug/kg	1.0
Bromodichloromethane	ND	10	ug/kg	1.0
Bromoform	ND	10	ug/kg	1.0
Bromomethane	ND	20	ug/kg	1.0
2-Butanone (MEK)	**48**	**40**	**ug/kg**	**4.7**
Carbon disulfide	ND	10	ug/kg	1.0
Carbon tetrachloride	ND	10	ug/kg	1.1
Chlorobenzene	ND	10	ug/kg	2.0
Chloroethane	ND	20	ug/kg	1.0
Chloroform	ND	10	ug/kg	1.0
Chloromethane	ND	20	ug/kg	1.8
Dibromochloromethane	ND	10	ug/kg	1.0
Dibromomethane	ND	10	ug/kg	1.0
1,2-Dibromoethane (EDB)	ND	10	ug/kg	1.0
1,2-Dichlorobenzene	ND	10	ug/kg	3.3
1,3-Dichlorobenzene	ND	10	ug/kg	4.2
1,4-Dichlorobenzene	ND	10	ug/kg	3.5
Dichlorodifluoromethane	ND	20	ug/kg	1.3
1,1-Dichloroethane	**24**	**10**	**ug/kg**	**1.3**
1,2-Dichloroethane	ND	10	ug/kg	1.1
1,1-Dichloroethene	ND	10	ug/kg	1.4
cis-1,2-Dichloroethene	**2.5 J**	**5.1**	**ug/kg**	**1.1**
trans-1,2-Dichloroethene	**3.3 J**	**5.1**	**ug/kg**	**1.6**
1,2-Dichloroethene (total)	**5.8 J**	**10**	**ug/kg**	**2.6**
1,2-Dichloropropane	ND	10	ug/kg	1.0
cis-1,3-Dichloropropene	ND	10	ug/kg	1.5
trans-1,3-Dichloropropene	ND	10	ug/kg	1.1
trans-1,4-Dichloro-2-butene	ND	10	ug/kg	2.1
1,4-Dioxane	ND	1000	ug/kg	86
Ethanol	ND	1000	ug/kg	94
Ethylbenzene	ND	10	ug/kg	2.3
Ethyl methacrylate	ND	10	ug/kg	1.2
Hexane	ND	10	ug/kg	1.7

(Continued on next page)

URS

Client Sample ID: E2-S(PIPE)

GC/MS Volatiles

Lot-Sample #...: D1H200248-003 Work Order #...: EH9N21AC Matrix.....: SO

PARAMETER	RESULT	REPORTING LIMIT	UNITS	MDL
2-Hexanone	ND	40	ug/kg	3.4
Iodomethane	ND	10	ug/kg	1.0
Methylene chloride	ND	10	ug/kg	1.0
4-Methyl-2-pentanone	ND	40	ug/kg	2.4
Methyl tert-butyl ether	ND	10	ug/kg	1.0
Styrene	ND	10	ug/kg	2.5
1,1,2,2-Tetrachloroethane	ND	10	ug/kg	1.0
tert-Butyl alcohol	ND	400	ug/kg	25
Tetrachloroethene	ND	10	ug/kg	2.1
Tetrahydrofuran	ND	40	ug/kg	2.5
Toluene	ND	10	ug/kg	1.6
1,1,1-Trichloroethane	ND	10	ug/kg	1.0
1,1,2-Trichloroethane	ND	10	ug/kg	2.0
Trichloroethene	ND	10	ug/kg	1.3
Trichlorofluoromethane	ND	20	ug/kg	1.1
1,2,3-Trichloropropane	ND	10	ug/kg	2.3
Trichlorotrifluoroethane	ND	40	ug/kg	1.4
Vinyl acetate	ND	20	ug/kg	8.8
Vinyl chloride	**6.3 J**	**20**	**ug/kg**	**1.6**
Xylenes (total)	ND	10	ug/kg	6.2
Dichlorofluoromethane	ND	20	ug/kg	2.2
Ethyl ether	ND	20	ug/kg	1.0
Acetonitrile	ND	200	ug/kg	34
Chloroprene	ND	10	ug/kg	1.7
Isopropyl ether	ND	100	ug/kg	5.0
Propionitrile	ND	40	ug/kg	13
Ethyl acetate	ND	20	ug/kg	6.6
Methacrylonitrile	ND	100	ug/kg	10
Isobutyl alcohol	ND	400	ug/kg	24
Methyl methacrylate	ND	10	ug/kg	2.6
n-Butanol	ND	400	ug/kg	26
2-Nitropropane	ND	20	ug/kg	5.0
1,1,1,2-Tetrachloroethane	ND	10	ug/kg	2.6
Cyclohexanone	ND	510	ug/kg	22
Isopropylbenzene	ND	10	ug/kg	2.7
1,2-Dibromo-3-chloropropane (DBCP)	ND	20	ug/kg	1.4

SURROGATE	PERCENT RECOVERY	RECOVERY LIMITS
Dibromofluoromethane	105	(80 - 120)
1,2-Dichloroethane-d4	106	(79 - 125)
4-Bromofluorobenzene	101	(71 - 132)
Toluene-d8	89	(77 - 117)

(Continued on next page)

URS

Client Sample ID: E2-S(PIPE)

GC/MS Volatiles

Lot-Sample #...: D1H200248-003 Work Order #...: EH9N21AC Matrix.....: SO

NOTE(S):

Results and reporting limits have been adjusted for dry weight.

J Estimated result. Result is less than RL.

URS

Client Sample ID: E2-S(PIPE)

GC/MS Semivolatiles

Lot-Sample #...: D1H200248-003 Work Order #...: EH9N21AD Matrix.....: SO
Date Sampled...: 08/17/01 15:45 Date Received..: 08/18/01
Prep Date.....: 08/21/01 Analysis Date..: 08/27/01
Prep Batch #...: 1233169 Analysis Time..: 21:59
Dilution Factor: 1

Method.....: SW846 8270C

PARAMETER	RESULT	REPORTING LIMIT	UNITS	MDL
Anthracene	ND	420	ug/kg	98
Acenaphthene	ND	420	ug/kg	58
Acenaphthylene	ND	420	ug/kg	43
Benzo(a)anthracene	ND	420	ug/kg	49
Benzo(a)pyrene	**150 J**	**420**	**ug/kg**	**120**
Chrysene	ND	420	ug/kg	67
Dibenz(a,h)anthracene	ND	420	ug/kg	59
Benzo(b)fluoranthene	ND	420	ug/kg	130
Benzo(ghi)perylene	ND	420	ug/kg	88
Benzo(k)fluoranthene	ND	420	ug/kg	120
Fluoranthene	ND	420	ug/kg	110
Fluorene	ND	420	ug/kg	96
Phenanthrene	ND	420	ug/kg	47
yrene	ND	420	ug/kg	50
ndeno(1,2,3-cd)pyrene	ND	420	ug/kg	61
Naphthalene	ND	420	ug/kg	88

SURROGATE	PERCENT RECOVERY	RECOVERY LIMITS
2-Fluorophenol	62	(34 - 97)
Phenol-d5	60	(39 - 90)
Nitrobenzene-d5	56	(33 - 97)
2-Fluorobiphenyl	61	(39 - 91)
2,4,6-Tribromophenol	62	(29 - 95)
Terphenyl-d14	72	(30 - 102)

NOTE(S):

Results and reporting limits have been adjusted for dry weight.

J Estimated result. Result is less than RL.

URS

Client Sample ID: E2-S(PIPE)

GC Semivolatiles

Lot-Sample #...: D1H200248-003 Work Order #...: EH9N21AE Matrix.....: SO
Date Sampled...: 08/17/01 15:45 Date Received..: 08/18/01
Prep Date.....: 08/21/01 Analysis Date..: 08/30/01
Prep Batch #...: 1233159 Analysis Time..: 12:37
Dilution Factor: 1
Method.....: SW846 8082

PARAMETER	RESULT	REPORTING LIMIT	UNITS	MDL
Aroclor 1016	ND	42	ug/kg	13
Aroclor 1221	ND	42	ug/kg	8.7
Aroclor 1232	ND	42	ug/kg	11
Aroclor 1242	ND	42	ug/kg	11
Aroclor 1248	**28 J**	**42**	**ug/kg**	**7.6**
Aroclor 1254	ND	42	ug/kg	7.7
Aroclor 1260	ND	42	ug/kg	7.5

SURROGATE	PERCENT RECOVERY	RECOVERY LIMITS
Decachlorobiphenyl	74	(62 - 145)
Tetrachloro-m-xylene	85	(60 - 130)

OTE(S):

Results and reporting limits have been adjusted for dry weight.

J Estimated result. Result is less than RL.

URS

Client Sample ID: E2-S(PIPE)

TOTAL Metals

Lot-Sample #...: D1H200248-003 Matrix.....: SO
Date Sampled...: 08/17/01 15:45 Date Received..: 08/18/01

PARAMETER	RESULT	REPORTING LIMIT	UNITS	METHOD	PREPARATION-ANALYSIS DATE	WORK ORDER #
Prep Batch #...: 1234204						
Mercury	0.058	0.042	mg/kg	SW846 7471A	09/04/01	EH9N21AN
		Dilution Factor: 1		Analysis Time..: 19:27	MDL.....: 0.0033	
Prep Batch #...: 1235338						
Silver	ND	1.3	mg/kg	SW846 6010B	08/23-09/05/01	EH9N21AM
		Dilution Factor: 1		Analysis Time..: 22:50	MDL.....: 0.090	
Arsenic	7.3	1.3	mg/kg	SW846 6010B	08/23-09/07/01	EH9N21AH
		Dilution Factor: 1		Analysis Time..: 22:22	MDL.....: 0.37	
Barium	91.8	1.3	mg/kg	SW846 6010B	08/23-09/05/01	EH9N21AF
		Dilution Factor: 1		Analysis Time..: 22:50	MDL.....: 0.063	
Cadmium	ND	0.63	mg/kg	SW846 6010B	09/11-09/12/01	EH9N21AJ
		Dilution Factor: 1		Analysis Time..: 13:05	MDL.....: 0.042	
Chromium	11.6	1.3	mg/kg	SW846 6010B	08/23-09/05/01	EH9N21AG
		Dilution Factor: 1		Analysis Time..: 22:50	MDL.....: 0.29	
Lead	9.6	1.0	mg/kg	SW846 6010B	09/11-09/12/01	EH9N21AK
		Dilution Factor: 1		Analysis Time..: 13:05	MDL.....: 0.27	
Selenium	ND	1.6	mg/kg	SW846 6010B	08/23-09/05/01	EH9N21AL
		Dilution Factor: 1		Analysis Time..: 22:50	MDL.....: 0.49	

NOTE(S):

Results and reporting limits have been adjusted for dry weight.

URS

Client Sample ID: E2-S(PIPE)

General Chemistry

Lot-Sample #...: D1H200248-003 Work Order #...: EH9N2 Matrix.....: SO
Date Sampled...: 08/17/01 15:45 Date Received..: 08/18/01

PARAMETER	RESULT	RL	UNITS	METHOD	PREPARATION-ANALYSIS DATE	PREP BATCH #
Percent Moisture	20.8	0.10	%	MCAWW 160.3 MOD	08/29/01	1242356

Dilution Factor: 1 Analysis Time..: 15:00 MDL.....:

URS

Client Sample ID: E2-S(B)

GC/MS Volatiles

Lot-Sample #...: D1H200248-004 Work Order #...: EH9N61AC Matrix.....: SO
Date Sampled...: 08/17/01 15:55 Date Received..: 08/18/01
Prep Date.....: 08/18/01 Analysis Date..: 08/22/01
Prep Batch #...: 1235386 Analysis Time..: 20:18
Dilution Factor: 0.79
Method.....: SW846 8260B

PARAMETER	RESULT	REPORTING LIMIT	UNITS	MDL
2-Nitropropane	ND	9.3	ug/kg	2.3
1,1,1,2-Tetrachloroethane	ND	4.6	ug/kg	1.2
Cyclohexanone	ND	230	ug/kg	9.8
Isopropylbenzene	ND	4.6	ug/kg	1.2
1,2-Dibromo-3-chloropropane (DBCP)	ND	9.3	ug/kg	0.62
Acetone	ND	19	ug/kg	3.1
Acrolein	ND	93	ug/kg	35
Acrylonitrile	ND	93	ug/kg	5.4
Benzene	ND	4.6	ug/kg	0.46
Bromodichloromethane	ND	4.6	ug/kg	0.46
Bromoform	ND	4.6	ug/kg	0.46
Bromomethane	ND	9.3	ug/kg	0.46
-Butanone (MEK)	ND	19	ug/kg	2.1
Carbon disulfide	ND	4.6	ug/kg	0.48
Carbon tetrachloride	ND	4.6	ug/kg	0.50
Chlorobenzene	ND	4.6	ug/kg	0.93
Chloroethane	**1.3 J**	**9.3**	**ug/kg**	**0.46**
Chloroform	ND	4.6	ug/kg	0.46
Chloromethane	ND	9.3	ug/kg	0.83
Dibromochloromethane	ND	4.6	ug/kg	0.46
Dibromomethane	ND	4.6	ug/kg	0.46
1,2-Dibromoethane (EDB)	ND	4.6	ug/kg	0.46
1,2-Dichlorobenzene	ND	4.6	ug/kg	1.5
1,3-Dichlorobenzene	ND	4.6	ug/kg	1.9
1,4-Dichlorobenzene	ND	4.6	ug/kg	1.6
Dichlorodifluoromethane	ND	9.3	ug/kg	0.57
1,1-Dichloroethane	**43**	**4.6**	**ug/kg**	**0.60**
1,2-Dichloroethane	ND	4.6	ug/kg	0.51
1,1-Dichloroethene	ND	4.6	ug/kg	0.65
cis-1,2-Dichloroethene	**19**	**2.3**	**ug/kg**	**0.51**
trans-1,2-Dichloroethene	**12**	**2.3**	**ug/kg**	**0.71**
1,2-Dichloroethene (total)	**31**	**4.6**	**ug/kg**	**1.2**
1,2-Dichloropropane	ND	4.6	ug/kg	0.46
cis-1,3-Dichloropropene	ND	4.6	ug/kg	0.66
trans-1,3-Dichloropropene	ND	4.6	ug/kg	0.49
trans-1,4-Dichloro-2-butene	ND	4.6	ug/kg	0.94

(Continued on next page)

URS

Client Sample ID: E2-S(B)

GC/MS Volatiles

Lot-Sample #...: D1H200248-004 Work Order #...: EH9N61AC Matrix.....: SO

PARAMETER	RESULT	REPORTING LIMIT	UNITS	MDL
1,4-Dioxane	ND	460	ug/kg	39
Ethanol	ND	460	ug/kg	43
Ethylbenzene	ND	4.6	ug/kg	1.0
Ethyl methacrylate	ND	4.6	ug/kg	0.55
Hexane	ND	4.6	ug/kg	0.75
2-Hexanone	ND	19	ug/kg	1.5
Iodomethane	ND	4.6	ug/kg	0.46
Methylene chloride	ND	4.6	ug/kg	0.46
4-Methyl-2-pentanone	ND	19	ug/kg	1.1
Methyl tert-butyl ether	ND	4.6	ug/kg	0.46
Styrene	ND	4.6	ug/kg	1.1
1,1,2,2-Tetrachloroethane	ND	4.6	ug/kg	0.46
tert-Butyl alcohol	ND	190	ug/kg	12
Tetrachloroethene	ND	4.6	ug/kg	0.94
Tetrahydrofuran	ND	19	ug/kg	1.1
Toluene	ND	4.6	ug/kg	0.74
1,1,1-Trichloroethane	ND	4.6	ug/kg	0.46
1,1,2-Trichloroethane	ND	4.6	ug/kg	0.90
richloroethene	ND	4.6	ug/kg	0.57
Trichlorofluoromethane	ND	9.3	ug/kg	0.50
1,2,3-Trichloropropane	ND	4.6	ug/kg	1.0
Trichlorotrifluoroethane	ND	19	ug/kg	0.61
Vinyl acetate	ND	9.3	ug/kg	4.0
Vinyl chloride	**41**	**9.3**	**ug/kg**	**0.72**
Xylenes (total)	ND	4.6	ug/kg	2.8
Dichlorofluoromethane	ND	9.3	ug/kg	1.0
Ethyl ether	ND	9.3	ug/kg	0.46
Acetonitrile	ND	93	ug/kg	15
Chloroprene	ND	4.6	ug/kg	0.76
Isopropyl ether	ND	46	ug/kg	2.3
Propionitrile	ND	19	ug/kg	5.7
Ethyl acetate	ND	9.3	ug/kg	3.0
Methacrylonitrile	ND	46	ug/kg	4.6
Isobutyl alcohol	ND	190	ug/kg	11
Methyl methacrylate	ND	4.6	ug/kg	1.2
n-Butanol	ND	190	ug/kg	12

SURROGATE	PERCENT RECOVERY	RECOVERY LIMITS
Dibromofluoromethane	113	(80 - 120)
1,2-Dichloroethane-d4	111	(79 - 125)
4-Bromofluorobenzene	139 *	(71 - 132)
Toluene-d8	112	(77 - 117)

(Continued on next page)

URS

Client Sample ID: E2-S(B)

GC/MS Volatiles

Lot-Sample #...: D1H200248-004 Work Order #...: EH9N61AC Matrix.....: SO

NOTE(S):

* Surrogate recovery is outside stated control limits.

Results and reporting limits have been adjusted for dry weight.

J Estimated result. Result is less than RL.

URS

Client Sample ID: E2-S(B)

GC/MS Semivolatiles

Lot-Sample #...: D1H200248-004 Work Order #...: EH9N61AD Matrix.....: SO
Date Sampled...: 08/17/01 15:55 Date Received..: 08/18/01
Prep Date.....: 08/21/01 Analysis Date..: 08/27/01
Prep Batch #...: 1233169 Analysis Time..: 22:24
Dilution Factor: 1

Method.....: SW846 8270C

PARAMETER	RESULT	REPORTING LIMIT	UNITS	MDL
Anthracene	ND	380	ug/kg	91
Acenaphthene	ND	380	ug/kg	53
Acenaphthylene	ND	380	ug/kg	39
Benzo(a)anthracene	ND	380	ug/kg	45
Benzo(a)pyrene	ND	380	ug/kg	110
Chrysene	ND	380	ug/kg	62
Dibenz(a,h)anthracene	ND	380	ug/kg	55
Benzo(b)fluoranthene	ND	380	ug/kg	120
Benzo(ghi)perylene	ND	380	ug/kg	81
Benzo(k)fluoranthene	ND	380	ug/kg	110
Fluoranthene	ND	380	ug/kg	98
Fluorene	ND	380	ug/kg	88
Phenanthrene	ND	380	ug/kg	43
rrene	ND	380	ug/kg	46
ndeno(1,2,3-cd)pyrene	ND	380	ug/kg	56
Naphthalene	ND	380	ug/kg	81

SURROGATE	PERCENT RECOVERY	RECOVERY LIMITS
2-Fluorophenol	45	(34 - 97)
Phenol-d5	44	(39 - 90)
Nitrobenzene-d5	41	(33 - 97)
2-Fluorobiphenyl	47	(39 - 91)
2,4,6-Tribromophenol	30	(29 - 95)
Terphenyl-d14	58	(30 - 102)

NOTE(S):

Results and reporting limits have been adjusted for dry weight.

URS

Client Sample ID: E2-S(B)

GC Semivolatiles

Lot-Sample #...: D1H200248-004 Work Order #...: EH9N61AE Matrix.....: SO
Date Sampled...: 08/17/01 15:55 Date Received..: 08/18/01
Prep Date.....: 08/21/01 Analysis Date..: 08/30/01
Prep Batch #...: 1233159 Analysis Time..: 13:08
Dilution Factor: 1

Method.....: SW846 8082

PARAMETER	RESULT	REPORTING LIMIT	UNITS	MDL
Aroclor 1016	ND	38	ug/kg	12
Aroclor 1221	ND	38	ug/kg	8.0
Aroclor 1232	ND	38	ug/kg	10
Aroclor 1242	ND	38	ug/kg	9.7
Aroclor 1248	ND	38	ug/kg	7.0
Aroclor 1254	**100**	**38**	**ug/kg**	**7.1**
Aroclor 1260	**99**	**38**	**ug/kg**	**6.9**

SURROGATE	PERCENT RECOVERY	RECOVERY LIMITS
Decachlorobiphenyl	83	(62 - 145)
Tetrachloro-m-xylene	90	(60 - 130)

NOTE(S):

Results and reporting limits have been adjusted for dry weight.

URS

Client Sample ID: E2-S(B)

TOTAL Metals

Lot-Sample #...: D1H200248-004 Matrix.....: SO
Date Sampled...: 08/17/01 15:55 Date Received..: 08/18/01

PARAMETER	RESULT	REPORTING LIMIT	UNITS	METHOD	PREPARATION-ANALYSIS DATE	WORK ORDER #
Prep Batch #...: 1234204						
Mercury	0.0062 B	0.038	mg/kg	SW846 7471A	09/04/01	EH9N61AN
		Dilution Factor: 1		Analysis Time..: 19:29	MDL.....: 0.0030	
Prep Batch #...: 1235338						
Silver	ND	1.2	mg/kg	SW846 6010B	08/23-09/05/01	EH9N61AM
		Dilution Factor: 1		Analysis Time..: 22:55	MDL.....: 0.082	
Arsenic	4.6	1.2	mg/kg	SW846 6010B	08/23-09/07/01	EH9N61AH
		Dilution Factor: 1		Analysis Time..: 22:27	MDL.....: 0.34	
Barium	39.0	1.2	mg/kg	SW846 6010B	08/23-09/05/01	EH9N61AF
		Dilution Factor: 1		Analysis Time..: 22:55	MDL.....: 0.058	
Cadmium	ND	0.58	mg/kg	SW846 6010B	09/11-09/12/01	EH9N61AJ
		Dilution Factor: 1		Analysis Time..: 13:10	MDL.....: 0.038	
Chromium	12.3	1.2	mg/kg	SW846 6010B	08/23-09/05/01	EH9N61AG
		Dilution Factor: 1		Analysis Time..: 22:55	MDL.....: 0.27	
Lead	4.8	0.93	mg/kg	SW846 6010B	09/11-09/12/01	EH9N61AK
		Dilution Factor: 1		Analysis Time..: 13:10	MDL.....: 0.24	
Selenium	ND	1.5	mg/kg	SW846 6010B	08/23-09/05/01	EH9N61AL
		Dilution Factor: 1		Analysis Time..: 22:55	MDL.....: 0.45	

NOTE(S):

B Estimated result. Result is less than RL.

Results and reporting limits have been adjusted for dry weight.

URS

Client Sample ID: E2-S(B)

General Chemistry

Lot-Sample #...: D1H200248-004 Work Order #...: EH9N6 Matrix.....: SO
Date Sampled...: 08/17/01 15:55 Date Received..: 08/18/01

PARAMETER	RESULT	RL	UNITS	METHOD	PREPARATION-ANALYSIS DATE	PREP BATCH #
Percent Moisture	13.8	0.10	%	MCAWW 160.3 MOD	08/29/01	1242356

Dilution Factor: 1 Analysis Time..: 15:00 MDL.....:

URS

Client Sample ID: TRIP BLANK

GC/MS Volatiles

Lot-Sample #...: D1H200248-005 Work Order #...: EH9N71AA Matrix.....: WQ
Date Sampled...: 08/17/01 Date Received..: 08/18/01
Prep Date.....: 08/22/01 Analysis Date..: 08/22/01
Prep Batch #...: 1235279 Analysis Time..: 17:16
Dilution Factor: 1

Method.....: SW846 8260B

PARAMETER	RESULT	REPORTING LIMIT	UNITS	MDL
Acrolein	ND	20	ug/L	4.7
Acrylonitrile	ND	20	ug/L	2.4
Acetone	**2.8 J**	**10**	**ug/L**	**1.9**
Benzene	ND	1.0	ug/L	0.21
Bromodichloromethane	ND	1.0	ug/L	0.22
Bromoform	ND	1.0	ug/L	0.32
Bromomethane	ND	2.0	ug/L	0.30
2-Butanone (MEK)	ND	5.0	ug/L	0.93
Carbon disulfide	ND	1.0	ug/L	0.19
Carbon tetrachloride	ND	1.0	ug/L	0.19
Chlorobenzene	ND	1.0	ug/L	0.30
Chloroethane	ND	2.0	ug/L	0.25
2-Chloroethyl vinyl ether	ND	2.0	ug/L	0.13
Chloroform	ND	1.0	ug/L	0.23
Chloromethane	ND	2.0	ug/L	0.30
Dibromochloromethane	ND	1.0	ug/L	0.38
Dibromomethane	ND	1.0	ug/L	0.44
1,2-Dibromoethane (EDB)	ND	1.0	ug/L	0.36
1,2-Dichlorobenzene	ND	1.0	ug/L	0.24
1,3-Dichlorobenzene	ND	1.0	ug/L	0.26
1,4-Dichlorobenzene	ND	1.0	ug/L	0.24
Dichlorodifluoromethane	ND	2.0	ug/L	0.23
1,1-Dichloroethane	ND	1.0	ug/L	0.17
1,2-Dichloroethane	ND	1.0	ug/L	0.28
1,1-Dichloroethene	ND	1.0	ug/L	0.20
cis-1,2-Dichloroethene	ND	1.0	ug/L	0.26
trans-1,2-Dichloroethene	ND	0.50	ug/L	0.27
1,2-Dichloroethene (total)	ND	1.0	ug/L	0.53
1,2-Dichloropropane	ND	1.0	ug/L	0.21
cis-1,3-Dichloropropene	ND	1.0	ug/L	0.28
trans-1,3-Dichloropropene	ND	1.0	ug/L	0.42
trans-1,4-Dichloro-2-butene	ND	1.0	ug/L	0.60
1,4-Dioxane	ND	200	ug/L	17
Ethanol	ND	200	ug/L	72
Ethylbenzene	ND	1.0	ug/L	0.28
Ethyl methacrylate	ND	1.0	ug/L	0.25

(Continued on next page)

URS

Client Sample ID: TRIP BLANK

GC/MS Volatiles

Lot-Sample #...: D1H200248-005 Work Order #...: EH9N71AA Matrix.....: WQ

PARAMETER	RESULT	REPORTING LIMIT	UNITS	MDL
Hexane	ND	1.0	ug/L	0.25
2-Hexanone	ND	5.0	ug/L	0.70
Iodomethane	ND	1.0	ug/L	0.23
Methylene chloride	ND	1.0	ug/L	0.89
4-Methyl-2-pentanone	ND	5.0	ug/L	0.79
Methyl tert-butyl ether	ND	5.0	ug/L	0.21
Styrene	ND	1.0	ug/L	0.27
1,1,2,2-Tetrachloroethane	ND	1.0	ug/L	0.31
tert-Butyl alcohol	ND	50	ug/L	6.3
Tetrachloroethene	ND	1.0	ug/L	0.36
Tetrahydrofuran	ND	5.0	ug/L	0.32
Toluene	ND	1.0	ug/L	0.29
1,1,1-Trichloroethane	ND	1.0	ug/L	0.26
1,1,2-Trichloroethane	ND	1.0	ug/L	0.39
Trichloroethene	ND	1.0	ug/L	0.22
Trichlorofluoromethane	ND	2.0	ug/L	0.28
1,2,3-Trichloropropane	ND	1.0	ug/L	0.29
Trichlorotrifluoroethane	ND	1.0	ug/L	0.21
Vinyl acetate	ND	2.0	ug/L	0.31
Vinyl chloride	ND	1.0	ug/L	0.21
Xylenes (total)	ND	2.0	ug/L	0.95
Dichlorofluoromethane	ND	2.0	ug/L	0.12
Ethyl ether	ND	2.0	ug/L	0.24
Acetonitrile	ND	20	ug/L	2.6
Chloroprene	ND	1.0	ug/L	0.22
Isopropyl ether	ND	10	ug/L	0.91
Propionitrile	ND	5.0	ug/L	2.2
Ethyl acetate	ND	5.0	ug/L	0.25
Methacrylonitrile	ND	10	ug/L	1.6
Isobutyl alcohol	ND	50	ug/L	11
Methyl methacrylate	ND	1.0	ug/L	0.30
n-Butanol	ND	50	ug/L	7.7
2-Nitropropane	ND	2.0	ug/L	0.62
1,1,1,2-Tetrachloroethane	ND	1.0	ug/L	0.22
Cyclohexanone	ND	20	ug/L	12
Isopropylbenzene	ND	1.0	ug/L	0.31
1,2-Dibromo-3-chloropropane (DBCP)	ND	2.0	ug/L	0.25

SURROGATE	PERCENT RECOVERY	RECOVERY LIMITS
Dibromofluoromethane	100	(80 - 120)
1,2-Dichloroethane-d4	96	(72 - 127)
4-Bromofluorobenzene	103	(79 - 119)
Toluene-d8	102	(79 - 119)

(Continued on next page)

URS

Client Sample ID: TRIP BLANK

GC/MS Volatiles

Lot-Sample #...: D1H200248-005 Work Order #...: EH9N71AA Matrix.....: WQ

NOTE(S):

J Estimated result. Result is less than RL.

QC DATA ASSOCIATION SUMMARY

D1H200248

Sample Preparation and Analysis Control Numbers

SAMPLE#	MATRIX	ANALYTICAL METHOD	LEACH BATCH #	PREP BATCH #	MS RUN#
001	SO	SW846 7471A		1234204	1234110
	SO	SW846 8082		1233159	1233041
	SO	SW846 8260B		1235386	1235186
	SO	SW846 8270C		1233169	1233048
	SO	SW846 6010B		1235338	1235152
	SO	MCAWW 160.3 MOD		1242356	1242180
002	SO	SW846 7471A		1234204	1234110
	SO	SW846 8082		1233159	1233041
	SO	SW846 8260B		1235386	1235186
	SO	SW846 8270C		1233169	1233048
	SO	SW846 6010B		1235338	1235152
	SO	MCAWW 160.3 MOD		1242356	1242180
003	SO	SW846 7471A		1234204	1234110
	SO	SW846 8082		1233159	1233041
	SO	SW846 8260B		1235386	1235186
	SO	SW846 8270C		1233169	1233048
	SO	SW846 6010B		1235338	1235152
	SO	MCAWW 160.3 MOD		1242356	1242180
004	SO	SW846 7471A		1234204	1234110
	SO	SW846 8082		1233159	1233041
	SO	SW846 8260B		1235386	1235186
	SO	SW846 8270C		1233169	1233048
	SO	SW846 6010B		1235338	1235152
	SO	MCAWW 160.3 MOD		1242356	1242180
005	WQ	SW846 8260B		1235279	1235120

METHOD BLANK REPORT

GC/MS Volatiles

Client Lot #...: D1H200248 Work Order #...: EJE931AA Matrix.....: WATER
MB Lot-Sample #: D1H230000-279

Prep Date.....: 08/22/01 Analysis Time..: 10:12
Analysis Date..: 08/22/01 Prep Batch #...: 1235279
Dilution Factor: 1

PARAMETER	RESULT	REPORTING LIMIT	UNITS	METHOD
Trichlorotrifluoroethane	ND	1.0	ug/L	SW846 8260B
Acetonitrile	ND	20	ug/L	SW846 8260B
Acrolein	ND	20	ug/L	SW846 8260B
Acrylonitrile	ND	20	ug/L	SW846 8260B
Chloroprene	ND	1.0	ug/L	SW846 8260B
Cyclohexanone	ND	20	ug/L	SW846 8260B
Dibromomethane	ND	1.0	ug/L	SW846 8260B
1,2-Dichlorobenzene	ND	1.0	ug/L	SW846 8260B
1,3-Dichlorobenzene	ND	1.0	ug/L	SW846 8260B
1,4-Dichlorobenzene	ND	1.0	ug/L	SW846 8260B
trans-1,4-Dichloro-2-butene	ND	1.0	ug/L	SW846 8260B
Dichlorodifluoromethane	ND	2.0	ug/L	SW846 8260B
cis-1,2-Dichloroethene	ND	1.0	ug/L	SW846 8260B
2-Dichloroethene (total)	ND	1.0	ug/L	SW846 8260B
Dichlorofluoromethane	ND	2.0	ug/L	SW846 8260B
1,4-Dioxane	ND	200	ug/L	SW846 8260B
Ethanol	ND	200	ug/L	SW846 8260B
Ethyl acetate	ND	5.0	ug/L	SW846 8260B
Ethyl ether	ND	2.0	ug/L	SW846 8260B
Ethyl methacrylate	ND	1.0	ug/L	SW846 8260B
Trichlorofluoromethane	ND	2.0	ug/L	SW846 8260B
Iodomethane	ND	1.0	ug/L	SW846 8260B
Isobutyl alcohol	ND	50	ug/L	SW846 8260B
Isopropylbenzene	ND	1.0	ug/L	SW846 8260B
Isopropyl ether	ND	10	ug/L	SW846 8260B
Methacrylonitrile	ND	10	ug/L	SW846 8260B
tert-Butyl alcohol	ND	50	ug/L	SW846 8260B
Methyl methacrylate	ND	1.0	ug/L	SW846 8260B
2-Nitropropane	ND	2.0	ug/L	SW846 8260B
Propionitrile	ND	5.0	ug/L	SW846 8260B
1,1,1,2-Tetrachloroethane	ND	1.0	ug/L	SW846 8260B
Tetrahydrofuran	ND	5.0	ug/L	SW846 8260B
1,2,3-Trichloropropane	ND	1.0	ug/L	SW846 8260B
n-Butanol	ND	50	ug/L	SW846 8260B
Methyl tert-butyl ether	ND	5.0	ug/L	SW846 8260B
1,2-Dibromo-3-chloropropane (DBCP)	ND	2.0	ug/L	SW846 8260B
1,2-Dibromoethane (EDB)	ND	1.0	ug/L	SW846 8260B
Hexane	ND	1.0	ug/L	SW846 8260B

(Continued on next page)

METHOD BLANK REPORT

GC/MS Volatiles

Client Lot #...: D1H200248 Work Order #...: EJE931AA Matrix.....: WATER

PARAMETER	RESULT	REPORTING LIMIT	UNITS	METHOD
Acetone	ND	10	ug/L	SW846 8260B
Benzene	ND	1.0	ug/L	SW846 8260B
Bromodichloromethane	ND	1.0	ug/L	SW846 8260B
Bromoform	ND	1.0	ug/L	SW846 8260B
Bromomethane	ND	2.0	ug/L	SW846 8260B
Carbon disulfide	ND	1.0	ug/L	SW846 8260B
Carbon tetrachloride	ND	1.0	ug/L	SW846 8260B
Chlorobenzene	ND	1.0	ug/L	SW846 8260B
Dibromochloromethane	ND	1.0	ug/L	SW846 8260B
Chloroethane	ND	2.0	ug/L	SW846 8260B
2-Chloroethyl vinyl ether	ND	2.0	ug/L	SW846 8260B
Chloroform	ND	1.0	ug/L	SW846 8260B
Chloromethane	ND	2.0	ug/L	SW846 8260B
1,1-Dichloroethane	ND	1.0	ug/L	SW846 8260B
1,2-Dichloroethane	ND	1.0	ug/L	SW846 8260B
1,1-Dichloroethene	ND	1.0	ug/L	SW846 8260B
trans-1,2-Dichloroethene	ND	0.50	ug/L	SW846 8260B
1,2-Dichloropropane	ND	1.0	ug/L	SW846 8260B
cis-1,3-Dichloropropene	ND	1.0	ug/L	SW846 8260B
trans-1,3-Dichloropropene	ND	1.0	ug/L	SW846 8260B
Ethylbenzene	ND	1.0	ug/L	SW846 8260B
2-Hexanone	ND	5.0	ug/L	SW846 8260B
Methylene chloride	ND	1.0	ug/L	SW846 8260B
4-Methyl-2-pentanone	ND	5.0	ug/L	SW846 8260B
Styrene	ND	1.0	ug/L	SW846 8260B
1,1,2,2-Tetrachloroethane	ND	1.0	ug/L	SW846 8260B
Tetrachloroethene	ND	1.0	ug/L	SW846 8260B
Toluene	ND	1.0	ug/L	SW846 8260B
1,1,1-Trichloroethane	ND	1.0	ug/L	SW846 8260B
1,1,2-Trichloroethane	ND	1.0	ug/L	SW846 8260B
Trichloroethene	ND	1.0	ug/L	SW846 8260B
Vinyl acetate	ND	2.0	ug/L	SW846 8260B
Vinyl chloride	ND	1.0	ug/L	SW846 8260B
Xylenes (total)	ND	2.0	ug/L	SW846 8260B
2-Butanone (MEK)	ND	5.0	ug/L	SW846 8260B

SURROGATE	PERCENT RECOVERY	RECOVERY LIMITS
Dibromofluoromethane	97	(80 - 120)
1,2-Dichloroethane-d4	89	(72 - 127)
4-Bromofluorobenzene	102	(79 - 119)
Toluene-d8	106	(79 - 119)

NOTE(S):

Calculations are performed before rounding to avoid round-off errors in calculated results.

METHOD BLANK REPORT

GC/MS Volatiles

Client Lot #...: D1H200248 Work Order #...: EJFWD1AA Matrix.....: SOLID
MB Lot-Sample #: D1H230000-386

Prep Date.....: 08/22/01 Analysis Time..: 12:31
Analysis Date..: 08/22/01 Prep Batch #...: 1235386
Dilution Factor: 1

PARAMETER	RESULT	REPORTING LIMIT	UNITS	METHOD
Benzene	ND	5.0	ug/kg	SW846 8260B
Ethylbenzene	ND	5.0	ug/kg	SW846 8260B
Toluene	ND	5.0	ug/kg	SW846 8260B
Xylenes (total)	ND	5.0	ug/kg	SW846 8260B
Bromodichloromethane	ND	5.0	ug/kg	SW846 8260B
Carbon tetrachloride	ND	5.0	ug/kg	SW846 8260B
Chlorobenzene	ND	5.0	ug/kg	SW846 8260B
Dibromochloromethane	ND	5.0	ug/kg	SW846 8260B
Chloroethane	ND	10	ug/kg	SW846 8260B
Chloromethane	ND	10	ug/kg	SW846 8260B
1,2-Dichlorobenzene	ND	5.0	ug/kg	SW846 8260B
1,3-Dichlorobenzene	ND	5.0	ug/kg	SW846 8260B
1,4-Dichlorobenzene	ND	5.0	ug/kg	SW846 8260B
Dichlorodifluoromethane	ND	10	ug/kg	SW846 8260B
1-Dichloroethane	ND	5.0	ug/kg	SW846 8260B
2-Dichloroethane	ND	5.0	ug/kg	SW846 8260B
1,1-Dichloroethene	ND	5.0	ug/kg	SW846 8260B
cis-1,2-Dichloroethene	ND	2.5	ug/kg	SW846 8260B
trans-1,2-Dichloroethene	ND	2.5	ug/kg	SW846 8260B
1,2-Dichloropropane	ND	5.0	ug/kg	SW846 8260B
cis-1,3-Dichloropropene	ND	5.0	ug/kg	SW846 8260B
trans-1,3-Dichloropropene	ND	5.0	ug/kg	SW846 8260B
Trichlorofluoromethane	ND	10	ug/kg	SW846 8260B
Methylene chloride	ND	5.0	ug/kg	SW846 8260B
1,1,1,2-Tetrachloroethane	ND	5.0	ug/kg	SW846 8260B
1,1,2,2-Tetrachloroethane	ND	5.0	ug/kg	SW846 8260B
Tetrachloroethene	ND	5.0	ug/kg	SW846 8260B
1,1,1-Trichloroethane	ND	5.0	ug/kg	SW846 8260B
1,1,2-Trichloroethane	ND	5.0	ug/kg	SW846 8260B
Trichloroethene	ND	5.0	ug/kg	SW846 8260B
1,2,3-Trichloropropane	ND	5.0	ug/kg	SW846 8260B
Vinyl chloride	ND	10	ug/kg	SW846 8260B
Acetone	ND	20	ug/kg	SW846 8260B
Acetonitrile	ND	100	ug/kg	SW846 8260B
Acrolein	ND	100	ug/kg	SW846 8260B
Acrylonitrile	ND	100	ug/kg	SW846 8260B
Bromoform	ND	5.0	ug/kg	SW846 8260B
Bromomethane	ND	10	ug/kg	SW846 8260B
Carbon disulfide	ND	5.0	ug/kg	SW846 8260B
Chloroprene	ND	5.0	ug/kg	SW846 8260B
Chloroform	ND	5.0	ug/kg	SW846 8260B

(Continued on next page)

METHOD BLANK REPORT

GC/MS Volatiles

Client Lot #...: D1H200248 Work Order #...: EJFWD1AA Matrix.....: SOLID

PARAMETER	RESULT	REPORTING LIMIT	UNITS	METHOD
Dibromomethane	ND	5.0	ug/kg	SW846 8260B
trans-1,4-Dichloro-2-butene	ND	5.0	ug/kg	SW846 8260B
1,4-Dioxane	ND	500	ug/kg	SW846 8260B
Ethyl methacrylate	ND	5.0	ug/kg	SW846 8260B
2-Hexanone	ND	20	ug/kg	SW846 8260B
Iodomethane	ND	5.0	ug/kg	SW846 8260B
Isobutyl alcohol	ND	200	ug/kg	SW846 8260B
Methacrylonitrile	ND	50	ug/kg	SW846 8260B
Methyl methacrylate	ND	5.0	ug/kg	SW846 8260B
4-Methyl-2-pentanone	ND	20	ug/kg	SW846 8260B
Propionitrile	ND	20	ug/kg	SW846 8260B
Styrene	ND	5.0	ug/kg	SW846 8260B
Vinyl acetate	ND	10	ug/kg	SW846 8260B
1,2-Dibromo-3-chloropropane (DBCP)	ND	10	ug/kg	SW846 8260B
1,2-Dibromoethane (EDB)	ND	5.0	ug/kg	SW846 8260B
2-Butanone (MEK)	ND	20	ug/kg	SW846 8260B
clohexanone	ND	250	ug/kg	SW846 8260B
,2-Dichloroethene (total)	ND	5.0	ug/kg	SW846 8260B
Dichlorofluoromethane	ND	10	ug/kg	SW846 8260B
Ethanol	ND	500	ug/kg	SW846 8260B
Ethyl acetate	ND	10	ug/kg	SW846 8260B
Ethyl ether	ND	10	ug/kg	SW846 8260B
Isopropylbenzene	ND	5.0	ug/kg	SW846 8260B
Isopropyl ether	ND	50	ug/kg	SW846 8260B
tert-Butyl alcohol	ND	200	ug/kg	SW846 8260B
2-Nitropropane	ND	10	ug/kg	SW846 8260B
Tetrahydrofuran	ND	20	ug/kg	SW846 8260B
n-Butanol	ND	200	ug/kg	SW846 8260B
Trichlorotrifluoroethane	ND	20	ug/kg	SW846 8260B
Methyl tert-butyl ether	ND	5.0	ug/kg	SW846 8260B
Hexane	ND	5.0	ug/kg	SW846 8260B

SURROGATE	PERCENT RECOVERY	RECOVERY LIMITS
Dibromofluoromethane	107	(80 - 120)
1,2-Dichloroethane-d4	109	(79 - 125)
4-Bromofluorobenzene	94	(71 - 132)
Toluene-d8	90	(77 - 117)

NOTE(S):

Calculations are performed before rounding to avoid round-off errors in calculated results.

METHOD BLANK REPORT

GC/MS Volatiles

Client Lot #...: D1H200248 Work Order #...: EJFWD1AE Matrix.....: SOLID
MB Lot-Sample #: D1H230000-386

Prep Date.....: 08/17/01 Analysis Time..: 18:34
Analysis Date..: 08/22/01 Prep Batch #...: 1235386
Dilution Factor: 1

PARAMETER	RESULT	REPORTING LIMIT	UNITS	METHOD
Benzene	ND	5.0	ug/kg	SW846 8260B
Ethylbenzene	ND	5.0	ug/kg	SW846 8260B
Toluene	ND	5.0	ug/kg	SW846 8260B
Xylenes (total)	ND	5.0	ug/kg	SW846 8260B
Bromodichloromethane	ND	5.0	ug/kg	SW846 8260B
Carbon tetrachloride	ND	5.0	ug/kg	SW846 8260B
Chlorobenzene	ND	5.0	ug/kg	SW846 8260B
Dibromochloromethane	ND	5.0	ug/kg	SW846 8260B
Chloroethane	ND	10	ug/kg	SW846 8260B
Chloromethane	ND	10	ug/kg	SW846 8260B
1,2-Dichlorobenzene	ND	5.0	ug/kg	SW846 8260B
1,3-Dichlorobenzene	ND	5.0	ug/kg	SW846 8260B
1,4-Dichlorobenzene	ND	5.0	ug/kg	SW846 8260B
Dichlorodifluoromethane	ND	10	ug/kg	SW846 8260B
1,1-Dichloroethane	ND	5.0	ug/kg	SW846 8260B
1,2-Dichloroethane	ND	5.0	ug/kg	SW846 8260B
1,1-Dichloroethene	ND	5.0	ug/kg	SW846 8260B
cis-1,2-Dichloroethene	ND	2.5	ug/kg	SW846 8260B
trans-1,2-Dichloroethene	ND	2.5	ug/kg	SW846 8260B
1,2-Dichloropropane	ND	5.0	ug/kg	SW846 8260B
cis-1,3-Dichloropropene	ND	5.0	ug/kg	SW846 8260B
trans-1,3-Dichloropropene	ND	5.0	ug/kg	SW846 8260B
Trichlorofluoromethane	ND	10	ug/kg	SW846 8260B
Methylene chloride	**0.62 J**	**5.0**	**ug/kg**	**SW846 8260B**
1,1,1,2-Tetrachloroethane	ND	5.0	ug/kg	SW846 8260B
1,1,2,2-Tetrachloroethane	ND	5.0	ug/kg	SW846 8260B
Tetrachloroethene	ND	5.0	ug/kg	SW846 8260B
1,1,1-Trichloroethane	ND	5.0	ug/kg	SW846 8260B
1,1,2-Trichloroethane	ND	5.0	ug/kg	SW846 8260B
Trichloroethene	ND	5.0	ug/kg	SW846 8260B
1,2,3-Trichloropropane	ND	5.0	ug/kg	SW846 8260B
Vinyl chloride	ND	10	ug/kg	SW846 8260B
Acetone	ND	20	ug/kg	SW846 8260B
Acetonitrile	ND	100	ug/kg	SW846 8260B
Acrolein	ND	100	ug/kg	SW846 8260B
Acrylonitrile	ND	100	ug/kg	SW846 8260B
Bromoform	ND	5.0	ug/kg	SW846 8260B
Bromomethane	ND	10	ug/kg	SW846 8260B
Carbon disulfide	ND	5.0	ug/kg	SW846 8260B
Chloroprene	ND	5.0	ug/kg	SW846 8260B
Chloroform	ND	5.0	ug/kg	SW846 8260B

(Continued on next page)

METHOD BLANK REPORT

GC/MS Volatiles

Client Lot #...: D1H200248 Work Order #...: EJFWD1AE Matrix.....: SOLID

PARAMETER	RESULT	REPORTING LIMIT	UNITS	METHOD
Dibromomethane	ND	5.0	ug/kg	SW846 8260B
trans-1,4-Dichloro-2-butene	ND	5.0	ug/kg	SW846 8260B
1,4-Dioxane	ND	500	ug/kg	SW846 8260B
Ethyl methacrylate	ND	5.0	ug/kg	SW846 8260B
2-Hexanone	ND	20	ug/kg	SW846 8260B
Iodomethane	ND	5.0	ug/kg	SW846 8260B
Isobutyl alcohol	ND	200	ug/kg	SW846 8260B
Methacrylonitrile	ND	50	ug/kg	SW846 8260B
Methyl methacrylate	ND	5.0	ug/kg	SW846 8260B
4-Methyl-2-pentanone	ND	20	ug/kg	SW846 8260B
Propionitrile	ND	20	ug/kg	SW846 8260B
Styrene	ND	5.0	ug/kg	SW846 8260B
Vinyl acetate	ND	10	ug/kg	SW846 8260B
1,2-Dibromo-3-chloropropane (DBCP)	ND	10	ug/kg	SW846 8260B
1,2-Dibromoethane (EDB)	ND	5.0	ug/kg	SW846 8260B
2-Butanone (MEK)	ND	20	ug/kg	SW846 8260B
clohexanone	ND	250	ug/kg	SW846 8260B
1,2-Dichloroethene (total)	ND	5.0	ug/kg	SW846 8260B
Dichlorofluoromethane	ND	10	ug/kg	SW846 8260B
Ethanol	ND	500	ug/kg	SW846 8260B
Ethyl acetate	ND	10	ug/kg	SW846 8260B
Ethyl ether	ND	10	ug/kg	SW846 8260B
Isopropylbenzene	ND	5.0	ug/kg	SW846 8260B
Isopropyl ether	ND	50	ug/kg	SW846 8260B
tert-Butyl alcohol	ND	200	ug/kg	SW846 8260B
2-Nitropropane	ND	10	ug/kg	SW846 8260B
Tetrahydrofuran	ND	20	ug/kg	SW846 8260B
n-Butanol	ND	200	ug/kg	SW846 8260B
Trichlorotrifluoroethane	ND	20	ug/kg	SW846 8260B
Methyl tert-butyl ether	ND	5.0	ug/kg	SW846 8260B
Hexane	ND	5.0	ug/kg	SW846 8260B

SURROGATE	PERCENT RECOVERY	RECOVERY LIMITS
Dibromofluoromethane	108	(80 - 120)
1,2-Dichloroethane-d4	105	(79 - 125)
4-Bromofluorobenzene	97	(71 - 132)
Toluene-d8	92	(77 - 117)

NOTE(S):

Calculations are performed before rounding to avoid round-off errors in calculated results.

(Continued on next page)

METHOD BLANK REPORT

GC/MS Volatiles

Client Lot #...: D1H200248 Work Order #...: EJFWD1AE Matrix.....: SOLID

NOTE(S):

J Estimated result. Result is less than RL.

This blank is associated with lot # D1H200248.

LABORATORY CONTROL SAMPLE EVALUATION REPORT

GC/MS Volatiles

Client Lot #...: D1H200248 Work Order #...: EJE931AC-LCS Matrix.....: WATER
LCS Lot-Sample#: D1H230000-279 EJE931AD-LCSD
Prep Date.....: 08/22/01 Analysis Date..: 08/22/01
Prep Batch #...: 1235279 Analysis Time..: 09:19
Dilution Factor: 1

PARAMETER	PERCENT RECOVERY	RECOVERY LIMITS	RPD	RPD LIMITS	METHOD
1,1-Dichloroethene	99	(79 - 119)			SW846 8260B
	97	(79 - 119)	2.1	(0-20)	SW846 8260B
Benzene	93	(79 - 119)			SW846 8260B
	94	(79 - 119)	1.6	(0-20)	SW846 8260B
Chlorobenzene	100	(76 - 116)			SW846 8260B
	100	(76 - 116)	0.42	(0-20)	SW846 8260B
Toluene	100	(75 - 122)			SW846 8260B
	100	(75 - 122)	0.14	(0-20)	SW846 8260B
Trichloroethene	94	(81 - 121)			SW846 8260B
	94	(81 - 121)	0.53	(0-20)	SW846 8260B

SURROGATE	PERCENT RECOVERY	RECOVERY LIMITS
Dibromofluoromethane	101	(80 - 120)
	95	(80 - 120)
1,2-Dichloroethane-d4	93	(72 - 127)
	85	(72 - 127)
4-Bromofluorobenzene	110	(79 - 119)
	102.	(79 - 119)
Toluene-d8	113	(79 - 119)
	106	(79 - 119)

NOTE(S):

Calculations are performed before rounding to avoid round-off errors in calculated results.

Bold print denotes control parameters

LABORATORY CONTROL SAMPLE DATA REPORT

GC/MS Volatiles

Client Lot #...: D1H200248 Work Order #...: EJE931AC-LCS Matrix.....: WATER
LCS Lot-Sample#: D1H230000-279 EJE931AD-LCSD
Prep Date.....: 08/22/01 Analysis Date..: 08/22/01
Prep Batch #...: 1235279 Analysis Time..: 09:19
Dilution Factor: 1

PARAMETER	SPIKE AMOUNT	MEASURED AMOUNT	UNITS	PERCENT RECOVERY	RPD	METHOD
1,1-Dichloroethene	10.0	9.93	ug/L	99		SW846 8260B
	10.0	9.72	ug/L	97	2.1	SW846 8260B
Benzene	10.0	9.27	ug/L	93		SW846 8260B
	10.0	9.42	ug/L	94	1.6	SW846 8260B
Chlorobenzene	10.0	9.97	ug/L	100		SW846 8260B
	10.0	10.0	ug/L	100	0.42	SW846 8260B
Toluene	10.0	10.0	ug/L	100		SW846 8260B
	10.0	10.0	ug/L	100	0.14	SW846 8260B
Trichloroethene	10.0	9.44	ug/L	94		SW846 8260B
	10.0	9.39	ug/L	94	0.53	SW846 8260B

SURROGATE	PERCENT RECOVERY	RECOVERY LIMITS
Dibromofluoromethane	101	(80 - 120)
	95	(80 - 120)
1,2-Dichloroethane-d4	93	(72 - 127)
	85	(72 - 127)
4-Bromofluorobenzene	110	(79 - 119)
	102	(79 - 119)
Toluene-d8	113	(79 - 119)
	106	(79 - 119)

NOTE(S):

Calculations are performed before rounding to avoid round-off errors in calculated results.

Bold print denotes control parameters

LABORATORY CONTROL SAMPLE EVALUATION REPORT

GC/MS Volatiles

Client Lot #...: D1H200248 Work Order #...: EJFWD1AC-LCS Matrix.....: SOLID
LCS Lot-Sample#: D1H230000-386 EJFWD1AD-LCSD
Prep Date.....: 08/22/01 Analysis Date..: 08/22/01
Prep Batch #...: 1235386 Analysis Time..: 11:37
Dilution Factor: 1

PARAMETER	PERCENT RECOVERY	RECOVERY LIMITS	RPD	RPD LIMITS	METHOD
1,1-Dichloroethene	**106**	**(78 - 118)**			**SW846 8260B**
	106	**(78 - 118)**	**0.81**	**(0-25)**	**SW846 8260B**
Benzene	**107**	**(79 - 121)**			**SW846 8260B**
	109	**(79 - 121)**	**1.8**	**(0-25)**	**SW846 8260B**
Chlorobenzene	**88**	**(76 - 116)**			**SW846 8260B**
	92	**(76 - 116)**	**4.5**	**(0-25)**	**SW846 8260B**
Toluene	**88**	**(76 - 116)**			**SW846 8260B**
	91	**(76 - 116)**	**2.8**	**(0-25)**	**SW846 8260B**
Trichloroethene	**102**	**(83 - 123)**			**SW846 8260B**
	104	**(83 - 123)**	**1.4**	**(0-25)**	**SW846 8260B**

SURROGATE	PERCENT RECOVERY	RECOVERY LIMITS
Dibromofluoromethane	105	(80 - 120)
	107	(80 - 120)
1,2-Dichloroethane-d4	106	(79 - 125)
	108	(79 - 125)
4-Bromofluorobenzene	95	(71 - 132)
	96	(71 - 132)
Toluene-d8	88	(77 - 117)
	91	(77 - 117)

NOTE(S):

Calculations are performed before rounding to avoid round-off errors in calculated results.

Bold print denotes control parameters

LABORATORY CONTROL SAMPLE DATA REPORT

GC/MS Volatiles

Client Lot #...: D1H200248 Work Order #...: EJFWD1AC-LCS Matrix.....: SOLID
LCS Lot-Sample#: D1H230000-386 EJFWD1AD-LCSD
Prep Date.....: 08/22/01 Analysis Date..: 08/22/01
Prep Batch #...: 1235386 Analysis Time..: 11:37
Dilution Factor: 1

PARAMETER	SPIKE AMOUNT	MEASURED AMOUNT	UNITS	PERCENT RECOVERY	RPD	METHOD
1,1-Dichloroethene	50.0	52.8	ug/kg	106		SW846 8260B
	50.0	53.2	ug/kg	106	0.81	SW846 8260B
Benzene	50.0	53.5	ug/kg	107		SW846 8260B
	50.0	54.5	ug/kg	109	1.8	SW846 8260B
Chlorobenzene	50.0	43.9	ug/kg	88		SW846 8260B
	50.0	45.9	ug/kg	92	4.5	SW846 8260B
Toluene	50.0	44.1	ug/kg	88		SW846 8260B
	50.0	45.4	ug/kg	91	2.8	SW846 8260B
Trichloroethene	50.0	51.0	ug/kg	102		SW846 8260B
	50.0	51.8	ug/kg	104	1.4	SW846 8260B

SURROGATE	PERCENT RECOVERY	RECOVERY LIMITS
Dibromofluoromethane	105	(80 - 120)
	107	(80 - 120)
1,2-Dichloroethane-d4	106	(79 - 125)
	108	(79 - 125)
4-Bromofluorobenzene	95	(71 - 132)
	96	(71 - 132)
Toluene-d8	88	(77 - 117)
	91	(77 - 117)

NOTE(S):

Calculations are performed before rounding to avoid round-off errors in calculated results.

Bold print denotes control parameters

MATRIX SPIKE SAMPLE EVALUATION REPORT

GC/MS Volatiles

Client Lot #...: D1H200248 Work Order #...: EHX281AD-MS Matrix.....: WATER
MS Lot-Sample #: D1H140142-004 EHX281AE-MSD
Date Sampled...: 08/10/01 11:30 Date Received..: 08/13/01
Prep Date.....: 08/22/01 Analysis Date..: 08/22/01
Prep Batch #...: 1235279 Analysis Time..: 11:32
Dilution Factor: 1

PARAMETER	PERCENT RECOVERY	RECOVERY LIMITS	RPD	RPD LIMITS	METHOD
1,1-Dichloroethene	85	(79 - 119)			SW846 8260B
	103	(79 - 119)	19	(0-20)	SW846 8260B
Benzene	82	(79 - 119)			SW846 8260B
	101 p	(79 - 119)	22	(0-20)	SW846 8260B
Chlorobenzene	87	(76 - 116)			SW846 8260B
	106	(76 - 116)	20	(0-20)	SW846 8260B
Toluene	85	(75 - 122)			SW846 8260B
	108 p	(75 - 122)	24	(0-20)	SW846 8260B
Trichloroethene	80 a	(81 - 121)			SW846 8260B
	104 p	(81 - 121)	25	(0-20)	SW846 8260B

SURROGATE	PERCENT RECOVERY	RECOVERY LIMITS
bromofluoromethane	97	(80 - 120)
	99	(80 - 120)
1,2-Dichloroethane-d4	91	(72 - 127)
	93	(72 - 127)
4-Bromofluorobenzene	102	(79 - 119)
	102	(79 - 119)
Toluene-d8	104	(79 - 119)
	105	(79 - 119)

NOTE(S):

Calculations are performed before rounding to avoid round-off errors in calculated results.

Bold print denotes control parameters

p Relative percent difference (RPD) is outside stated control limits.

a Spiked analyte recovery is outside stated control limits.

MATRIX SPIKE SAMPLE DATA REPORT

GC/MS Volatiles

Client Lot #...: D1H200248 Work Order #...: EHX281AD-MS Matrix.....: WATER
MS Lot-Sample #: D1H140142-004 EHX281AE-MSD
Date Sampled...: 08/10/01 11:30 Date Received..: 08/13/01
Prep Date.....: 08/22/01 Analysis Date..: 08/22/01
Prep Batch #...: 1235279 Analysis Time..: 11:32
Dilution Factor: 1

PARAMETER	SAMPLE AMOUNT	SPIKE AMT	MEASRD AMOUNT	UNITS	PERCENT RECOVERY	RPD	METHOD
1,1-Dichloroethene	ND	10.0	8.54	ug/L	85		SW846 8260B
	ND	10.0	10.3	ug/L	103	19	SW846 8260B
Benzene	ND	10.0	8.15	ug/L	82		SW846 8260B
	ND	10.0	10.1	ug/L	101 p	22	SW846 8260B
Chlorobenzene	ND	10.0	8.66	ug/L	87		SW846 8260B
	ND	10.0	10.6	ug/L	106	20	SW846 8260B
Toluene	ND	10.0	8.49	ug/L	85		SW846 8260B
	ND	10.0	10.8	ug/L	108 p	24	SW846 8260B
Trichloroethene	ND	10.0	8.05	ug/L	80 a		SW846 8260B
	ND	10.0	10.4	ug/L	104 p	25	SW846 8260B

SURROGATE	PERCENT RECOVERY	RECOVERY LIMITS
ıbromofluoromethane	97	(80 - 120)
	99	(80 - 120)
1,2-Dichloroethane-d4	91	(72 - 127)
	93	(72 - 127)
4-Bromofluorobenzene	102	(79 - 119)
	102	(79 - 119)
Toluene-d8	104	(79 - 119)
	105	(79 - 119)

NOTE(S):

Calculations are performed before rounding to avoid round-off errors in calculated results.

Bold print denotes control parameters

p Relative percent difference (RPD) is outside stated control limits.

a Spiked analyte recovery is outside stated control limits.

MATRIX SPIKE SAMPLE EVALUATION REPORT

GC/MS Volatiles

Client Lot #...: D1H200248 Work Order #...: EH3F11AH-MS Matrix.....: SOLID
MS Lot-Sample #: D1H150297-001 EH3F11AJ-MSD
Date Sampled...: 08/14/01 13:00 Date Received..: 08/15/01
Prep Date.....: 08/22/01 Analysis Date..: 08/22/01
Prep Batch #...: 1235386 Analysis Time..: 15:01
Dilution Factor: 1

PARAMETER	PERCENT RECOVERY	RECOVERY LIMITS	RPD	RPD LIMITS	METHOD
1,1-Dichloroethene	75 a	(78 - 118)			SW846 8260B
	77 a	(78 - 118)	2.2	(0-25)	SW846 8260B
Benzene	88	(79 - 121)			SW846 8260B
	90	(79 - 121)	2.0	(0-25)	SW846 8260B
Chlorobenzene	58 a	(76 - 116)			SW846 8260B
	58 a	(76 - 116)	0.41	(0-25)	SW846 8260B
Toluene	69 a	(76 - 116)			SW846 8260B
	70 a	(76 - 116)	1.2	(0-25)	SW846 8260B
Trichloroethene	59 a	(83 - 123)			SW846 8260B
	61 a	(83 - 123)	3.6	(0-25)	SW846 8260B

SURROGATE	PERCENT RECOVERY	RECOVERY LIMITS
Bromofluoromethane	104	(80 - 120)
	106	(80 - 120)
1,2-Dichloroethane-d4	108	(79 - 125)
	111	(79 - 125)
4-Bromofluorobenzene	106	(71 - 132)
	102	(71 - 132)
Toluene-d8	90	(77 - 117)
	89	(77 - 117)

NOTE(S):

Calculations are performed before rounding to avoid round-off errors in calculated results.

Bold print denotes control parameters

a Spiked analyte recovery is outside stated control limits.

MATRIX SPIKE SAMPLE DATA REPORT

GC/MS Volatiles

Client Lot #...: D1H200248 Work Order #...: EH3F11AH-MS Matrix.....: SOLID
MS Lot-Sample #: D1H150297-001 EH3F11AJ-MSD
Date Sampled...: 08/14/01 13:00 Date Received..: 08/15/01
Prep Date.....: 08/22/01 Analysis Date..: 08/22/01
Prep Batch #...: 1235386 Analysis Time..: 15:01
Dilution Factor: 1

PARAMETER	SAMPLE AMOUNT	SPIKE AMT	MEASRD AMOUNT	UNITS	PERCENT RECOVERY	RPD	METHOD
1,1-Dichloroethene	ND	50.0	37.7	ug/kg	75 a		SW846 8260B
	ND	50.0	38.5	ug/kg	77 a	2.2	SW846 8260B
Benzene	ND	50.0	43.9	ug/kg	88		SW846 8260B
	ND	50.0	44.8	ug/kg	90	2.0	SW846 8260B
Chlorobenzene	ND	50.0	29.0	ug/kg	58 a		SW846 8260B
	ND	50.0	28.9	ug/kg	58 a	0.41	SW846 8260B
Toluene	ND	50.0	34.3	ug/kg	69 a		SW846 8260B
	ND	50.0	34.8	ug/kg	70 a	1.2	SW846 8260B
Trichloroethene	ND	50.0	29.3	ug/kg	59 a		SW846 8260B
	ND	50.0	30.4	ug/kg	61 a	3.6	SW846 8260B

SURROGATE	PERCENT RECOVERY	RECOVERY LIMITS
bromofluoromethane	104	(80 - 120)
	106	(80 - 120)
1,2-Dichloroethane-d4	108	(79 - 125)
	111	(79 - 125)
4-Bromofluorobenzene	106	(71 - 132)
	102	(71 - 132)
Toluene-d8	90	(77 - 117)
	89	(77 - 117)

NOTE(S):

Calculations are performed before rounding to avoid round-off errors in calculated results.

Bold print denotes control parameters

a Spiked analyte recovery is outside stated control limits.

METHOD BLANK REPORT

GC/MS Semivolatiles

Client Lot #...: D1H200248
MB Lot-Sample #: D1H210000-169

Work Order #...: EH92J1AA

Matrix.....: SOLID

Prep Date.....: 08/21/01

Analysis Time..: 12:01

Analysis Date..: 08/27/01
Prep Batch #...: 1233169
Dilution Factor: 1

PARAMETER	RESULT	REPORTING LIMIT	UNITS	METHOD
Acenaphthene	ND	330	ug/kg	SW846 8270C
Acenaphthylene	ND	330	ug/kg	SW846 8270C
Anthracene	ND	330	ug/kg	SW846 8270C
Benzo(a)anthracene	ND	330	ug/kg	SW846 8270C
Benzo(b)fluoranthene	ND	330	ug/kg	SW846 8270C
Benzo(k)fluoranthene	ND	330	ug/kg	SW846 8270C
Benzo(ghi)perylene	ND	330	ug/kg	SW846 8270C
Benzo(a)pyrene	ND	330	ug/kg	SW846 8270C
Chrysene	ND	330	ug/kg	SW846 8270C
Dibenz(a,h)anthracene	ND	330	ug/kg	SW846 8270C
Fluoranthene	ND	330	ug/kg	SW846 8270C
Fluorene	ND	330	ug/kg	SW846 8270C
Indeno(1,2,3-cd)pyrene	ND	330	ug/kg	SW846 8270C
Naphthalene	ND	330	ug/kg	SW846 8270C
enanthrene	ND	330	ug/kg	SW846 8270C
Pyrene	ND	330	ug/kg	SW846 8270C

SURROGATE	PERCENT RECOVERY	RECOVERY LIMITS
2-Fluorophenol	57	(34 - 97)
Phenol-d5	54	(39 - 90)
Nitrobenzene-d5	53	(33 - 97)
2-Fluorobiphenyl	57	(39 - 91)
2,4,6-Tribromophenol	52	(29 - 95)
Terphenyl-d14	58	(30 - 102)

NOTE(S):

Calculations are performed before rounding to avoid round-off errors in calculated results.

LABORATORY CONTROL SAMPLE EVALUATION REPORT

GC/MS Semivolatiles

Client Lot #...: D1H200248 Work Order #...: EH92J1AC-LCS Matrix.....: SOLID
LCS Lot-Sample#: D1H210000-169 EH92J1AD-LCSD
Prep Date.....: 08/21/01 Analysis Date..: 08/27/01
Prep Batch #...: 1233169 Analysis Time..: 12:27
Dilution Factor: 1

PARAMETER	PERCENT RECOVERY	RECOVERY LIMITS	RPD	RPD LIMITS	METHOD
Acenaphthene	57	(49 - 93)			SW846 8270C
	62	(49 - 93)	7.0	(0-40)	SW846 8270C
Pyrene	56	(48 - 97)			SW846 8270C
	59	(48 - 97)	4.3	(0-40)	SW846 8270C
4-Chloro-3-methylphenol	57	(52 - 93)			SW846 8270C
	60	(52 - 93)	3.8	(0-40)	SW846 8270C
2-Chlorophenol	58	(51 - 91)			SW846 8270C
	61	(51 - 91)	5.2	(0-36)	SW846 8270C
1,4-Dichlorobenzene	55	(46 - 86)			SW846 8270C
	58	(46 - 86)	5.3	(0-40)	SW846 8270C
2,4-Dinitrotoluene	76	(53 - 105)			SW846 8270C
	80	(53 - 105)	5.4	(0-40)	SW846 8270C
4-Nitrophenol	48	(29 - 115)			SW846 8270C
	46	(29 - 115)	3.2	(0-40)	SW846 8270C
I-Nitrosodi-n-propyl-amine	49	(46 - 86)			SW846 8270C
	52	(46 - 86)	5.3	(0-40)	SW846 8270C
Pentachlorophenol	63	(27 - 97)			SW846 8270C
	65	(27 - 97)	2.7	(0-40)	SW846 8270C
Phenol	53	(50 - 90)			SW846 8270C
	56	(50 - 90)	6.1	(0-37)	SW846 8270C
1,2,4-Trichloro-benzene	58	(49 - 90)			SW846 8270C
	63	(49 - 90)	8.6	(0-40)	SW846 8270C

SURROGATE	PERCENT RECOVERY	RECOVERY LIMITS
2-Fluorophenol	58	(34 - 97)
	61	(34 - 97)
Phenol-d5	57	(39 - 90)
	59	(39 - 90)
Nitrobenzene-d5	54	(33 - 97)
	56	(33 - 97)
2-Fluorobiphenyl	58	(39 - 91)
	62	(39 - 91)
2,4,6-Tribromophenol	60	(29 - 95)
	64	(29 - 95)
Terphenyl-d14	60	(30 - 102)

(Continued on next page)

LABORATORY CONTROL SAMPLE EVALUATION REPORT

GC/MS Semivolatiles

Client Lot #...: D1H200248 Work Order #...: EH92J1AC-LCS Matrix.....: SOLID
LCS Lot-Sample#: D1H210000-169 EH92J1AD-LCSD

SURROGATE	PERCENT RECOVERY	RECOVERY LIMITS
	63	(30 - 102)

NOTE(S):

Calculations are performed before rounding to avoid round-off errors in calculated results.

Bold print denotes control parameters

LABORATORY CONTROL SAMPLE DATA REPORT

GC/MS Semivolatiles

Client Lot #...: D1H200248 Work Order #...: EH92J1AC-LCS Matrix.....: SOLID
LCS Lot-Sample#: D1H210000-169 EH92J1AD-LCSD
Prep Date.....: 08/21/01 Analysis Date..: 08/27/01
Prep Batch #...: 1233169 Analysis Time..: 12:27
Dilution Factor: 1

PARAMETER	SPIKE AMOUNT	MEASURED AMOUNT	UNITS	PERCENT RECOVERY	RPD	METHOD
Acenaphthene	3330	1920	ug/kg	57		SW846 8270C
	3330	2050	ug/kg	62	7.0	SW846 8270C
Pyrene	3330	1870	ug/kg	56		SW846 8270C
	3330	1950	ug/kg	59	4.3	SW846 8270C
4-Chloro-3-methylphenol	5000	2870	ug/kg	57		SW846 8270C
	5000	2980	ug/kg	60	3.8	SW846 8270C
2-Chlorophenol	5000	2880	ug/kg	58		SW846 8270C
	5000	3030	ug/kg	61	5.2	SW846 8270C
1,4-Dichlorobenzene	3330	1820	ug/kg	55		SW846 8270C
	3330	1920	ug/kg	58	5.3	SW846 8270C
2,4-Dinitrotoluene	3330	2530	ug/kg	76		SW846 8270C
	3330	2670	ug/kg	80	5.4	SW846 8270C
4-Nitrophenol	5000	2400	ug/kg	48		SW846 8270C
	5000	2320	ug/kg	46	3.2	SW846 8270C
-Nitrosodi-n-propyl-amine	3330	1650	ug/kg	49		SW846 8270C
	3330	1740	ug/kg	52	5.3	SW846 8270C
Pentachlorophenol	5000	3150	ug/kg	63		SW846 8270C
	5000	3240	ug/kg	65	2.7	SW846 8270C
Phenol	5000	2630	ug/kg	53		SW846 8270C
	5000	2790	ug/kg	56	6.1	SW846 8270C
1,2,4-Trichloro-benzene	3330	1930	ug/kg	58		SW846 8270C
	3330	2110	ug/kg	63	8.6	SW846 8270C

SURROGATE	PERCENT RECOVERY	RECOVERY LIMITS
2-Fluorophenol	58	(34 - 97)
	61	(34 - 97)
Phenol-d5	57	(39 - 90)
	59	(39 - 90)
Nitrobenzene-d5	54	(33 - 97)
	56	(33 - 97)
2-Fluorobiphenyl	58	(39 - 91)
	62	(39 - 91)
2,4,6-Tribromophenol	60	(29 - 95)
	64	(29 - 95)
Terphenyl-d14	60	(30 - 102)

(Continued on next page)

LABORATORY CONTROL SAMPLE DATA REPORT

GC/MS Semivolatiles

Client Lot #...: D1H200248 Work Order #...: EH92J1AC-LCS Matrix.....: SOLID
LCS Lot-Sample#: D1H210000-169 EH92J1AD-LCSD

SURROGATE	PERCENT RECOVERY	RECOVERY LIMITS
	63	(30 - 102)

NOTE(S):

Calculations are performed before rounding to avoid round-off errors in calculated results.

Bold print denotes control parameters

MATRIX SPIKE SAMPLE EVALUATION REPORT

GC/MS Semivolatiles

Client Lot #...: D1H200248 Work Order #...: EH6VK1A6-MS Matrix.....: SOLID
MS Lot-Sample #: D1H170171-008 EH6VK1A7-MSD
Date Sampled...: 08/15/01 16:20 Date Received..: 08/17/01
Prep Date.....: 08/21/01 Analysis Date..: 08/27/01
Prep Batch #...: 1233169 Analysis Time..: 17:44
Dilution Factor: 1

PARAMETER	PERCENT RECOVERY	RECOVERY LIMITS	RPD	RPD LIMITS	METHOD
Acenaphthene	57	(49 - 93)			SW846 8270C
	56	(49 - 93)	0.12	(0-40)	SW846 8270C
Pyrene	68	(48 - 97)			SW846 8270C
	70	(48 - 97)	2.5	(0-40)	SW846 8270C
4-Chloro-3-methylphenol	55	(52 - 93)			SW846 8270C
	56	(52 - 93)	1.6	(0-40)	SW846 8270C
2-Chlorophenol	55	(51 - 91)			SW846 8270C
	56	(51 - 91)	1.2	(0-36)	SW846 8270C
1,4-Dichlorobenzene	48	(46 - 86)			SW846 8270C
	49	(46 - 86)	1.4	(0-40)	SW846 8270C
2,4-Dinitrotoluene	67	(53 - 105)			SW846 8270C
	69	(53 - 105)	2.4	(0-40)	SW846 8270C
4-Nitrophenol	34	(29 - 115)			SW846 8270C
	34	(29 - 115)	0.51	(0-40)	SW846 8270C
N-Nitrosodi-n-propyl-amine	46	(46 - 86)			SW846 8270C
	48	(46 - 86)	3.9	(0-40)	SW846 8270C
Pentachlorophenol	54	(27 - 97)			SW846 8270C
	57	(27 - 97)	4.8	(0-40)	SW846 8270C
Phenol	51	(50 - 90)			SW846 8270C
	53	(50 - 90)	3.3	(0-37)	SW846 8270C
1,2,4-Trichloro-benzene	54	(49 - 90)			SW846 8270C
	54	(49 - 90)	0.15	(0-40)	SW846 8270C

SURROGATE	PERCENT RECOVERY	RECOVERY LIMITS
2-Fluorophenol	56	(34 - 97)
	57	(34 - 97)
Phenol-d5	55	(39 - 90)
	56	(39 - 90)
Nitrobenzene-d5	49	(33 - 97)
	50	(33 - 97)
2-Fluorobiphenyl	57	(39 - 91)
	56	(39 - 91)
2,4,6-Tribromophenol	60	(29 - 95)
	61	(29 - 95)

(Continued on next page)

MATRIX SPIKE SAMPLE EVALUATION REPORT

GC/MS Semivolatiles

Client Lot #...: D1H200248 Work Order #...: EH6VK1A6-MS Matrix.....: SOLID
MS Lot-Sample #: D1H170171-008 EH6VK1A7-MSD

SURROGATE	PERCENT RECOVERY	RECOVERY LIMITS
Terphenyl-d14	69	(30 - 102)
	70	(30 - 102)

NOTE(S):

Calculations are performed before rounding to avoid round-off errors in calculated results.

Bold print denotes control parameters

Results and reporting limits have been adjusted for dry weight.

MATRIX SPIKE SAMPLE DATA REPORT

GC/MS Semivolatiles

Client Lot #...: D1H200248 Work Order #...: EH6VK1A6-MS Matrix.....: SOLID
MS Lot-Sample #: D1H170171-008 EH6VK1A7-MSD
Date Sampled...: 08/15/01 16:20 Date Received..: 08/17/01
Prep Date.....: 08/21/01 Analysis Date..: 08/27/01
Prep Batch #...: 1233169 Analysis Time..: 17:44
Dilution Factor: 1

PARAMETER	SAMPLE AMOUNT	SPIKE AMT	MEASRD AMOUNT	UNITS	PERCENT RECOVERY	RPD	METHOD
Acenaphthene	ND	3890	2200	ug/kg	57		SW846 8270C
	ND	3890	2200	ug/kg	56	0.12	SW846 8270C
Pyrene	ND	3890	2650	ug/kg	68		SW846 8270C
	ND	3890	2720	ug/kg	70	2.5	SW846 8270C
4-Chloro-3-methylphenol	ND	5840	3200	ug/kg	55		SW846 8270C
	ND	5840	3260	ug/kg	56	1.6	SW846 8270C
2-Chlorophenol	ND	5840	3220	ug/kg	55		SW846 8270C
	ND	5840	3260	ug/kg	56	1.2	SW846 8270C
1,4-Dichlorobenzene	ND	3890	1880	ug/kg	48		SW846 8270C
	ND	3890	1910	ug/kg	49	1.4	SW846 8270C
2,4-Dinitrotoluene	ND	3890	2610	ug/kg	67		SW846 8270C
	ND	3890	2670	ug/kg	69	2.4	SW846 8270C
4-Nitrophenol	ND	5840	2000	ug/kg	34		SW846 8270C
	ND	5840	1990	ug/kg	34	0.51	SW846 8270C
N-Nitrosodi-n-propyl-amine	ND	3890	1780	ug/kg	46		SW846 8270C
	ND	3890	1850	ug/kg	48	3.9	SW846 8270C
Pentachlorophenol	ND	5840	3170	ug/kg	54		SW846 8270C
	ND	5840	3320	ug/kg	57	4.8	SW846 8270C
Phenol	ND	5840	3000	ug/kg	51		SW846 8270C
	ND	5840	3100	ug/kg	53	3.3	SW846 8270C
1,2,4-Trichloro-benzene	ND	3890	2120	ug/kg	54		SW846 8270C
	ND	3890	2120	ug/kg	54	0.15	SW846 8270C

SURROGATE	PERCENT RECOVERY	RECOVERY LIMITS
2-Fluorophenol	56	(34 - 97)
	57	(34 - 97)
Phenol-d5	55	(39 - 90)
	56	(39 - 90)
Nitrobenzene-d5	49	(33 - 97)
	50	(33 - 97)
2-Fluorobiphenyl	57	(39 - 91)
	56	(39 - 91)
2,4,6-Tribromophenol	60	(29 - 95)
	61	(29 - 95)

(Continued on next page)

MATRIX SPIKE SAMPLE DATA REPORT

GC/MS Semivolatiles

Client Lot #...: D1H200248 Work Order #...: EH6VK1A6-MS Matrix.....: SOLID
MS Lot-Sample #: D1H170171-008 EH6VK1A7-MSD

SURROGATE	PERCENT RECOVERY	RECOVERY LIMITS
Terphenyl-d14	69	(30 - 102)
	70	(30 - 102)

NOTE(S):

Calculations are performed before rounding to avoid round-off errors in calculated results.

Bold print denotes control parameters

Results and reporting limits have been adjusted for dry weight.

METHOD BLANK REPORT

GC Semivolatiles

Client Lot #...: D1H200248
MB Lot-Sample #: D1H210000-159
Work Order #...: EH9121AA
Matrix.....: SOLID
Prep Date.....: 08/21/01
Analysis Time..: 16:28
Analysis Date..: 08/29/01
Prep Batch #...: 1233159
Dilution Factor: 1

PARAMETER	RESULT	REPORTING LIMIT	UNITS	METHOD
Aroclor 1016	ND	33	ug/kg	SW846 8082
Aroclor 1221	ND	33	ug/kg	SW846 8082
Aroclor 1232	ND	33	ug/kg	SW846 8082
Aroclor 1242	ND	33	ug/kg	SW846 8082
Aroclor 1248	ND	33	ug/kg	SW846 8082
Aroclor 1254	ND	33	ug/kg	SW846 8082
Aroclor 1260	ND	33	ug/kg	SW846 8082

SURROGATE	PERCENT RECOVERY	RECOVERY LIMITS
Decachlorobiphenyl	81	(62 - 145)
Tetrachloro-m-xylene	92	(60 - 130)

NOTE(S):

.lations are performed before rounding to avoid round-off errors in calculated results.

LABORATORY CONTROL SAMPLE EVALUATION REPORT

GC Semivolatiles

Client Lot #...: D1H200248 Work Order #...: EH9121AC-LCS Matrix.....: SOLID
LCS Lot-Sample#: D1H210000-159 EH9121AD-LCSD
Prep Date.....: 08/21/01 Analysis Date..: 08/29/01
Prep Batch #...: 1233159 Analysis Time..: 16:58
Dilution Factor: 1

PARAMETER	PERCENT RECOVERY	RECOVERY LIMITS	RPD	RPD LIMITS	METHOD
Aroclor 1016	106	(65 - 130)			SW846 8082
	66 p	(65 - 130)	46	(0-23)	SW846 8082
Aroclor 1260	101	(66 - 128)			SW846 8082
	77 p	(66 - 128)	26	(0-23)	SW846 8082

SURROGATE	PERCENT RECOVERY	RECOVERY LIMITS
Decachlorobiphenyl	78	(62 - 145)
	62	(62 - 145)
Tetrachloro-m-xylene	87	(60 - 130)
	69	(60 - 130)

NOTE(S):

Calculations are performed before rounding to avoid round-off errors in calculated results.

d print denotes control parameters

p Relative percent difference (RPD) is outside stated control limits.

LABORATORY CONTROL SAMPLE DATA REPORT

GC Semivolatiles

Client Lot #...: D1H200248 Work Order #...: EH9121AC-LCS Matrix.....: SOLID
LCS Lot-Sample#: D1H210000-159 EH9121AD-LCSD
Prep Date.....: 08/21/01 Analysis Date..: 08/29/01
Prep Batch #...: 1233159 Analysis Time..: 16:58
Dilution Factor: 1

PARAMETER	SPIKE AMOUNT	MEASURED AMOUNT	UNITS	PERCENT RECOVERY	RPD	METHOD
Aroclor 1016	66.7	70.8	ug/kg	106		SW846 8082
	66.7	44.3 p	ug/kg	66	46	SW846 8082
Aroclor 1260	66.7	67.1	ug/kg	101		SW846 8082
	66.7	51.6 p	ug/kg	77	26	SW846 8082

SURROGATE	PERCENT RECOVERY	RECOVERY LIMITS
Decachlorobiphenyl	78	(62 - 145)
	62	(62 - 145)
Tetrachloro-m-xylene	87	(60 - 130)
	69	(60 - 130)

NOTE(S):

Calculations are performed before rounding to avoid round-off errors in calculated results.

ld print denotes control parameters

p Relative percent difference (RPD) is outside stated control limits.

MATRIX SPIKE SAMPLE EVALUATION REPORT

GC Semivolatiles

Client Lot #...: D1H200248 Work Order #...: EH9NR1AN-MS Matrix.....: SO
MS Lot-Sample #: D1H200248-001 EH9NR1AP-MSD
Date Sampled...: 08/17/01 10:30 Date Received..: 08/18/01
Prep Date.....: 08/21/01 Analysis Date..: 08/30/01
Prep Batch #...: 1233159 Analysis Time..: 12:07
Dilution Factor: 1

PARAMETER	PERCENT RECOVERY	RECOVERY LIMITS	RPD	RPD LIMITS	METHOD
Aroclor 1016	87	(65 - 130)			SW846 8082
	127	(65 - 130)	18	(0-23)	SW846 8082
Aroclor 1260	101	(66 - 128)			SW846 8082
	100	(66 - 128)	1.3	(0-23)	SW846 8082

SURROGATE	PERCENT RECOVERY	RECOVERY LIMITS
Decachlorobiphenyl	76	(62 - 145)
	78	(62 - 145)
Tetrachloro-m-xylene	86	(60 - 130)
	90	(60 - 130)

NOTE(S):

ulations are performed before rounding to avoid round-off errors in calculated results.

Bold print denotes control parameters

Results and reporting limits have been adjusted for dry weight.

MATRIX SPIKE SAMPLE DATA REPORT

GC Semivolatiles

Client Lot #...: D1H200248 Work Order #...: EH9NR1AN-MS Matrix.....: SO
MS Lot-Sample #: D1H200248-001 EH9NR1AP-MSD
Date Sampled...: 08/17/01 10:30 Date Received..: 08/18/01
Prep Date.....: 08/21/01 Analysis Date..: 08/30/01
Prep Batch #...: 1233159 Analysis Time..: 12:07
Dilution Factor: 1

PARAMETER	SAMPLE AMOUNT	SPIKE AMT	MEASRD AMOUNT	UNITS	PERCENT RECOVERY	RPD	METHOD
Aroclor 1016	95	79.0	164	ug/kg	87		SW846 8082
	95	79.0	196	ug/kg	127	18	SW846 8082
Aroclor 1260	ND	79.0	80.0	ug/kg	101		SW846 8082
	ND	79.0	78.9	ug/kg	100	1.3	SW846 8082

SURROGATE	PERCENT RECOVERY	RECOVERY LIMITS
Decachlorobiphenyl	76	(62 - 145)
	78	(62 - 145)
Tetrachloro-m-xylene	86	(60 - 130)
	90	(60 - 130)

NOTE(S):

culations are performed before rounding to avoid round-off errors in calculated results.

Bold print denotes control parameters

Results and reporting limits have been adjusted for dry weight.

METHOD BLANK REPORT

TOTAL Metals

Client Lot #...: D1H200248 Matrix.....: SOLID

PARAMETER	RESULT	REPORTING LIMIT	UNITS	METHOD	PREPARATION-ANALYSIS DATE	WORK ORDER #
MB Lot-Sample #: D1H220000-204 **Prep Batch #...:** 1234204						
Mercury	ND	0.033	mg/kg	SW846 7471A	09/04/01	EJC1G1AA
		Dilution Factor: 1				
		Analysis Time..: 18:54				
MB Lot-Sample #: D1H230000-338 **Prep Batch #...:** 1235338						
Arsenic	ND	1.0	mg/kg	SW846 6010B	08/23-09/07/01	EJFL81AD
		Dilution Factor: 1				
		Analysis Time..: 21:40				
Barium	ND	1.0	mg/kg	SW846 6010B	08/23-09/05/01	EJFL81AA
		Dilution Factor: 1				
		Analysis Time..: 22:08				
Cadmium	ND	0.50	mg/kg	SW846 6010B	09/11-09/12/01	EJFL81AE
		Dilution Factor: 1				
		Analysis Time..: 12:29				
Chromium	ND	1.0	mg/kg	SW846 6010B	08/23-09/05/01	EJFL81AC
		Dilution Factor: 1				
		Analysis Time..: 22:08				
Lead	**0.23 B**	**0.80**	**mg/kg**	**SW846 6010B**	**09/11-09/12/01**	**EJFL81AF**
		Dilution Factor: 1				
		Analysis Time..: 12:29				
Selenium	ND	1.3	mg/kg	SW846 6010B	08/23-09/05/01	EJFL81AG
		Dilution Factor: 1				
		Analysis Time..: 22:08				
Silver	ND	1.0	mg/kg	SW846 6010B	08/23-09/05/01	EJFL81AH
		Dilution Factor: 1				
		Analysis Time..: 22:08				

NOTE(S):

Calculations are performed before rounding to avoid round-off errors in calculated results.

B Estimated result. Result is less than RL.

LABORATORY CONTROL SAMPLE EVALUATION REPORT

TOTAL Metals

Lot-Sample #...: D1H200248 Matrix.....: SOLID

PARAMETER	PERCENT RECOVERY	RECOVERY LIMITS	RPD	RPD LIMITS	METHOD	PREPARATION-ANALYSIS DATE	PREP-BATCH #
Mercury	110	(82 - 113)			SW846 7471A	09/04/01	1234204
	110	(82 - 113)	0.54	(0-20)	SW846 7471A	09/04/01	1234204
		Dilution Factor: 1					
Arsenic	90	(87 - 107)			SW846 6010B	08/23-09/07/01	1235338
	90	(87 - 107)	0.18	(0-20)	SW846 6010B	08/23-09/07/01	1235338
		Dilution Factor: 1					
Barium	104	(86 - 114)			SW846 6010B	08/23-09/05/01	1235338
	101	(86 - 114)	2.5	(0-20)	SW846 6010B	08/23-09/05/01	1235338
		Dilution Factor: 1					
Cadmium	99	(89 - 109)			SW846 6010B	09/11-09/12/01	1235338
	99	(89 - 109)	0.42	(0-20)	SW846 6010B	09/11-09/12/01	1235338
		Dilution Factor: 1					
Chromium	88	(88 - 110)			SW846 6010B	08/23-09/05/01	1235338
	89	(88 - 110)	0.16	(0-20)	SW846 6010B	08/23-09/07/01	1235338
		Dilution Factor: 1					
Lead	102	(88 - 108)			SW846 6010B	09/11-09/12/01	1235338
	102	(88 - 108)	0.07	(0-20)	SW846 6010B	09/11-09/12/01	1235338
		Dilution Factor: 1					
Selenium	88	(86 - 107)			SW846 6010B	08/23-09/07/01	1235338
	89	(86 - 107)	1.3	(0-20)	SW846 6010B	08/23-09/07/01	1235338
		Dilution Factor: 1					
Silver	94	(88 - 108)			SW846 6010B	08/23-09/05/01	1235338
	91	(88 - 108)	3.0	(0-20)	SW846 6010B	08/23-09/05/01	1235338
		Dilution Factor: 1					

NOTE(S):

Calculations are performed before rounding to avoid round-off errors in calculated results.

LABORATORY CONTROL SAMPLE DATA REPORT

TOTAL Metals

Lot-Sample #...: D1H200248 Matrix.....: SOLID

PARAMETER	SPIKE AMOUNT	MEASURED AMOUNT	UNITS	PERCNT RECVRY	RPD	METHOD	PREPARATION-ANALYSIS DATE	PREP BATCH #
Mercury	0.417	0.458	mg/kg	110		SW846 7471A	09/04/01	1234204
	0.417	0.460	mg/kg	110	0.54	SW846 7471A	09/04/01	1234204
			Dilution Factor: 1					
Arsenic	200	179	mg/kg	90		SW846 6010B	08/23-09/07/01	1235338
	200	179	mg/kg	90	0.18	SW846 6010B	08/23-09/07/01	1235338
			Dilution Factor: 1					
Barium	200	208	mg/kg	104		SW846 6010B	08/23-09/05/01	1235338
	200	202	mg/kg	101	2.5	SW846 6010B	08/23-09/05/01	1235338
			Dilution Factor: 1					
Cadmium	5.00	4.93	mg/kg	99		SW846 6010B	09/11-09/12/01	1235338
	5.00	4.95	mg/kg	99	0.42	SW846 6010B	09/11-09/12/01	1235338
			Dilution Factor: 1					
Chromium	20.0	17.7	mg/kg	88		SW846 6010B	08/23-09/05/01	1235338
	20.0	17.7	mg/kg	89	0.16	SW846 6010B	08/23-09/07/01	1235338
			Dilution Factor: 1					
Lead	50.0	51.0	mg/kg	102		SW846 6010B	09/11-09/12/01	1235338
	50.0	51.0	mg/kg	102	0.07	SW846 6010B	09/11-09/12/01	1235338
			Dilution Factor: 1					
Selenium	200	176	mg/kg	88		SW846 6010B	08/23-09/07/01	1235338
	200	178	mg/kg	89	1.3	SW846 6010B	08/23-09/07/01	1235338
			Dilution Factor: 1					
Silver	5.00	4.71	mg/kg	94		SW846 6010B	08/23-09/05/01	1235338
	5.00	4.57	mg/kg	91	3.0	SW846 6010B	08/23-09/05/01	1235338
			Dilution Factor: 1					

NOTE(S):

Calculations are performed before rounding to avoid round-off errors in calculated results.

MATRIX SPIKE SAMPLE EVALUATION REPORT

TOTAL Metals

Client Lot #...: D1H200248 Matrix.....: SOLID
Date Sampled...: 08/15/01 16:20 Date Received..: 08/17/01

PARAMETER	PERCENT RECOVERY	RECOVERY LIMITS	RPD	RPD LIMITS	METHOD	PREPARATION-ANALYSIS DATE	WORK ORDER #
MS Lot-Sample #: D1H170171-008 Prep Batch #...: 1234204							
Mercury	109	(82 - 113)			SW846 7471A	09/04/01	EH6VK1A2
	112	(82 - 113)	2.3	(0-20)	SW846 7471A	09/04/01	EH6VK1A3

Dilution Factor: 1
Analysis Time..: 19:14

NOTE(S):

Calculations are performed before rounding to avoid round-off errors in calculated results.

Results and reporting limits have been adjusted for dry weight.

MATRIX SPIKE SAMPLE DATA REPORT

TOTAL Metals

Client Lot #...: D1H200248 Matrix.....: SOLID
Date Sampled...: 08/15/01 16:20 Date Received..: 08/17/01

PARAMETER	SAMPLE AMOUNT	SPIKE AMT	MEASURED AMOUNT	UNITS	PERCNT RECVRY	RPD	METHOD	PREPARATION-ANALYSIS DATE	WORK ORDER #
MS Lot-Sample #: D1H170171-008 **Prep Batch #...:** 1234204									
Mercury									
	0.0058	0.486	0.536	mg/kg	109		SW846 7471A	09/04/01	EH6VK1A2
	0.0058	0.486	0.549	mg/kg	112	2.3	SW846 7471A	09/04/01	EH6VK1A3

Dilution Factor: 1
Analysis Time..: 19:14

NOTE(S):

Calculations are performed before rounding to avoid round-off errors in calculated results.

Results and reporting limits have been adjusted for dry weight.

MATRIX SPIKE SAMPLE EVALUATION REPORT

TOTAL Metals

Client Lot #...: D1H200248 Matrix.....: SO
Date Sampled...: 08/17/01 10:30 Date Received..: 08/18/01

PARAMETER	PERCENT RECOVERY	RECOVERY LIMITS	RPD	RPD LIMITS	METHOD	PREPARATION-ANALYSIS DATE	WORK ORDER #
MS Lot-Sample #: D1H200248-001 Prep Batch #...: 1235338							
Arsenic	96	(87 - 107)			SW846 6010B	08/23-09/07/01	EH9NR1AW
	95	(87 - 107)	1.3	(0-20)	SW846 6010B	08/23-09/07/01	EH9NR1AX
		Dilution Factor: 1					
		Analysis Time..: 22:06					
Barium	106	(86 - 114)			SW846 6010B	08/23-09/05/01	EH9NR1AR
	107	(86 - 114)	1.2	(0-20)	SW846 6010B	08/23-09/05/01	EH9NR1AT
		Dilution Factor: 1					
		Analysis Time..: 22:34					
Cadmium	82 N	(89 - 109)			SW846 6010B	09/11-09/12/01	EH9NR1A0
	80 N	(89 - 109)	2.7	(0-20)	SW846 6010B	09/11-09/12/01	EH9NR1A1
		Dilution Factor: 1					
		Analysis Time..: 12:51					
Chromium	220 N	(88 - 110)			SW846 6010B	08/23-09/05/01	EH9NR1AU
	133 N,*	(88 - 110)	39	(0-20)	SW846 6010B	08/23-09/05/01	EH9NR1AV
		Dilution Factor: 1					
		Analysis Time..: 22:34					
Lead	86 N	(88 - 108)			SW846 6010B	09/11-09/12/01	EH9NR1A2
	82 N	(88 - 108)	4.8	(0-20)	SW846 6010B	09/11-09/12/01	EH9NR1A3
		Dilution Factor: 1					
		Analysis Time..: 12:51					
Selenium	91	(86 - 107)			SW846 6010B	08/23-09/05/01	EH9NR1A4
	90	(86 - 107)	1.2	(0-20)	SW846 6010B	08/23-09/05/01	EH9NR1A5
		Dilution Factor: 1					
		Analysis Time..: 22:34					
Silver	98	(88 - 108)			SW846 6010B	08/23-09/05/01	EH9NR1A6
	94	(88 - 108)	3.6	(0-20)	SW846 6010B	08/23-09/05/01	EH9NR1A7
		Dilution Factor: 1					
		Analysis Time..: 22:34					

NOTE(S):

Calculations are performed before rounding to avoid round-off errors in calculated results.

Results and reporting limits have been adjusted for dry weight.

N Spiked analyte recovery is outside stated control limits.

* Relative percent difference (RPD) is outside stated control limits.

MATRIX SPIKE SAMPLE DATA REPORT

TOTAL Metals

Client Lot #...: D1H200248 Matrix.....: SO
Date Sampled...: 08/17/01 10:30 Date Received..: 08/18/01

PARAMETER	SAMPLE AMOUNT	SPIKE AMT	MEASURED AMOUNT	UNITS	PERCNT RECVRY	RPD	METHOD	PREPARATION-ANALYSIS DATE	WORK ORDER #
MS Lot-Sample #: D1H200248-001 **Prep Batch #...:** 1235338									
Arsenic									
	2.8	237	230	mg/kg	96		SW846 6010B	08/23-09/07/01	EH9NR1AW
	2.8	237	228	mg/kg	95	1.3	SW846 6010B	08/23-09/07/01	EH9NR1AX
			Dilution Factor: 1						
			Analysis Time..: 22:06						
Barium									
	55.1	237	306	mg/kg	106		SW846 6010B	08/23-09/05/01	EH9NR1AR
	55.1	237	309	mg/kg	107	1.2	SW846 6010B	08/23-09/05/01	EH9NR1AT
			Dilution Factor: 1						
			Analysis Time..: 22:34						
Cadmium									
	ND	5.93	4.87 N	mg/kg	82		SW846 6010B	09/11-09/12/01	EH9NR1A0
	ND	5.93	4.74 N	mg/kg	80	2.7	SW846 6010B	09/11-09/12/01	EH9NR1A1
			Dilution Factor: 1						
			Analysis Time..: 12:51						
Chromium									
	10.9	23.7	63.1 N	mg/kg	220		SW846 6010B	08/23-09/05/01	EH9NR1AU
	10.9	23.7	42.5 N,*	mg/kg	133	39	SW846 6010B	08/23-09/05/01	EH9NR1AV
			Dilution Factor: 1						
			Analysis Time..: 22:34						
Lead									
	3.2	59.3	54.2 N	mg/kg	86		SW846 6010B	09/11-09/12/01	EH9NR1A2
	3.2	59.3	51.7 N	mg/kg	82	4.8	SW846 6010B	09/11-09/12/01	EH9NR1A3
			Dilution Factor: 1						
			Analysis Time..: 12:51						
Selenium									
	ND	237	215	mg/kg	91		SW846 6010B	08/23-09/05/01	EH9NR1A4
	ND	237	213	mg/kg	90	1.2	SW846 6010B	08/23-09/05/01	EH9NR1A5
			Dilution Factor: 1						
			Analysis Time..: 22:34						
Silver									
	ND	5.93	5.81	mg/kg	98		SW846 6010B	08/23-09/05/01	EH9NR1A6
	ND	5.93	5.60	mg/kg	94	3.6	SW846 6010B	08/23-09/05/01	EH9NR1A7
			Dilution Factor: 1						
			Analysis Time..: 22:34						

(Continued on next page)

MATRIX SPIKE SAMPLE DATA REPORT

TOTAL Metals

Client Lot #...: D1H200248 Matrix.....: SO
Date Sampled...: 08/17/01 10:30 Date Received..: 08/18/01

NOTE(S):

Calculations are performed before rounding to avoid round-off errors in calculated results.

Results and reporting limits have been adjusted for dry weight.

N Spiked analyte recovery is outside stated control limits.

* Relative percent difference (RPD) is outside stated control limits.

SAMPLE DUPLICATE EVALUATION REPORT

General Chemistry

Client Lot #...: D1H200248 Work Order #...: EJAGR-SMP Matrix.....: SOLID
EJAGR-DUP

Date Sampled...: 08/20/01 15:15 Date Received..: 08/21/01

% Moisture.....: 4.1 Dilution Factor: Initial Wgt/Vol:

PARAM	RESULT	DUPLICATE RESULT	UNITS	RPD	RPD LIMIT	METHOD	PREPARATION-ANALYSIS DATE	PREP BATCH #
Percent Moisture						SD Lot-Sample #:	D1H210155-010	
	4.1	4.8	%	16	(0-20)	MCAWW 160.3 MOD	08/29/01	1242356

Dilution Factor: 1 Analysis Time..: 15:00

Chain of Custody Record

STL Denver
4955 Yarrow Street
Arvada, CO 80002

SEVERN TRENT SERVICES

Severn Trent Laboratories, Inc.

STL-4124 (0700) DEN (0900)

Client	Project Manager	Date	Chain of Custody Number
URS	MIKE WAGNER	8-17-01	043700
Address	**Telephone Number (Area Code)/Fax Number**	**Lab Number**	**Page 1 of 1**
36 E. 7th Street - Suite 2300	513-651-3440		

City	State	Zip Code	Site Contact	Lab Contact
CINCINNATI	OH	45224		LYN BANKENS

Project Name and Location (State)	Carrier/Waybill Number
JCI, FOWLERSVILLE, MI	8277280 89277

Contract/Purchase Order/Quote No.

Analysis (Attach list if more space is needed)

Sample I.D. No. and Description (Containers for each sample may be combined on one line)	Date	Time	Matrix: Air	Aqueous	Sed.	Soil	Containers & Preservatives: Unpres.	H2SO4	HNOS	HCl	NaOH	ZnAc/NaOH	VOC	PAH	PCB	RCRA Metals	Special Instructions/ Conditions of Receipt
~~E1 (B)~~ E1-N (B)	8-17-01	1030				X	✓						X				
E1-N (B)	"	1030				X								X	X		
E1-N (B)	"	1030				X										X	
E1-N (N4')	"	1045				X							X				
E1-N (N4')	"	1045				X								X	X		
E1-N (N4')	"	1045				X										X	
E2-S (Pipe)	"	1545				X							X				
E2-S (Pipe)	"	1545				X								X	X		
E2-S (Pipe)	"	1545				X										X	
E2-S (B)	"	1555				X							X				
E2-S (B)	"	1555				X								X	X		
E2-S (B)	"	1555				X										X	

Possible Hazard Identification TRIP BLANK

☒ Non-Hazard ☐ Flammable ☐ Skin Irritant ☐ Poison B ☐ Unknown

Sample Disposal ☐ Return To Client ☐ Disposal By Lab ☐ Archive For 2 Months (A fee may be assessed if samples are retained longer than 3 months)

Turn Around Time Required ☐ 24 Hours ☐ 48 Hours ☐ 7 Days ☐ 14 Days ☒ 21 Days ☐ Other

QC Requirements (Specify)

	Date	Time		Date	Time
1. Relinquished By [signature]	8-17-01	1800	1. Received By [signature]	8/18/01	845
2. Relinquished By			2. Received By		
3. Relinquished By			3. Received By		

Comments

DISTRIBUTION: WHITE - Stays with the Sample; CANARY - Returned to Client with Report; PINK - Field Copy

SEVERN TRENT SERVICES

STL Denver
4955 Yarrow Street
Arvada, CO 80002-4517

Tel: 303 736 0100
Fax: 303 431 7171
www.stl-inc.com

ANALYTICAL REPORT

Johnson Controls
Fowerville, MI

Lot # D1H220253

Mike Wagner

URS Dames & Moore

STL DENVER

for **Linda L. Benkers**
Project Manager

September 11, 2001

Table Of Contents

Standard Deliverable

Report Contents

- Table of Contents
- Case Narrative
- Executive Summary – Detection Highlights
- Analytical Method Summary
- Method/ Analyst Summary
- Sample Summary
- Analytical Results by Sample
- QC Data Association Summary
- Chain-of-Custody

Total Number of Pages 92

N:\WORD\TOC\COVER.DOC

Project Narrative
(D1H220253)

On August 22, 2000, the STL Denver laboratory received four samples and one trip blank from URS Dames and Moore. This report presents the analytical results as well as supporting information to aid in the evaluation and interpretation of the data.

With the exception of the below mentioned anomalies, standard analytical protocols were followed in the analysis of the samples. All laboratory QC samples analyzed in conjunction with the samples in this project were within established control limits.

Sample Receiving
The samples were received at the laboratory in good condition at 0.2°C.

Sample D1H220253-004 is listed on the chain of custody as client sample B-TP-3. The sample labels list the client sample ID as B-TP-3(5). As per client request the sample is logged as per the sample labels.

No samples labeled B-TP-3(4) were received. The samples whose times and dates matched the times and dates for sample B-TP-3(4) listed on the chain of custody were logged as this sample.

GC/MS Volatiles, SW846 8260B
The volatile analysis of sample D1H220253-001 was performed out of the 4-ounce jar received for this sample. All other volatile analyses were performed from the encore samples received.

Samples D1H220253-002 and 004 were analyzed at dilutions due to high concentrations of target compounds in the samples. As a result, the surrogates were diluted and their recoveries were not calculated.

Sample D1H220253-001 demonstrated recovery of the surrogates 1,2-dichloroethane-d4 and toluene-d8 below control limits due to the interference of non-target hydrocarbons.

The MS associated with batch 1239384, but performed on an unrelated sample, demonstrated recoveries outside control limits for chlorobenzene and toluene. The MSD, LCS, and method blank are in control; therefore these anomalies are attributed to matrix interference and no further corrective action was taken.

The MS/MSD associated with batch 1243335, but performed on an unrelated sample, demonstrated recoveries of all spike and surrogate compounds outside control limits, except the surrogate 4-bromofluorobenzene which was recovered within control limits.

The associated LCS and method blank were in control; therefore these anomalies are attributed to matrix interference and no further corrective action was taken.

GC/MS Semi-Volatiles, SW846 8270C

Due to matrix interference, the Method 8270C extracts for samples D1H220253-001 and 004 would not concentrate lower than 4mL and 2mL respectively. The reporting limits are adjusted according. The surrogates for sample D1H220253-001 were diluted to less than detectable concentrations.

Sample D1H220253-004 demonstrated recoveries below control limits for the surrogates 2-fluorophenol, phenol-d5, 2-fluorobiphenyl, 2,4,6-tribromophenol, and terphenyl-d14. The raw data indicates matrix interference.

The MS/MSD associated with batch 1235171, but performed on an unrelated sample, demonstrated recoveries outside control limits for 4-chloro-3methylphenol, 2-chlorophenol, 1,4-dichorobenzene, phenol, and 1,2,4-trichlorobenzene. The MSD demonstrated additional recoveries outside control limits for acenaphthene and n-nitrosodi-n-propylamine. The associated LCS and method blank are in control; therefore these anomalies are attributed to matrix interference and no further corrective action was taken.

GC Semi-Volatiles, SW846 8082

Samples D1H220253-001, 002, and 004 were analyzed at dilutions due to high concentrations of target compounds in the samples. As a result, the surrogates were diluted and their recoveries were not calculated. The matrix spike compounds were also diluted out of sample D1H220253-001.

Sample D1H220253-003 demonstrated recoveries of the surrogates decachlorobiphenyl and tetrachloro-m-xylene below control limits. The sample was re-extracted one day past the recommended hold time. The re-extracted sample demonstrated recoveries of all surrogates within control limits. The results from both extractions are reported.

The MS/MSD performed on sample D1H220253-003 demonstrated recoveries outside control limits for Aroclor 1016. The raw data shows clear evidence of matrix interference. The associated LCS and method blank are in control.

Metals, SW846 6010B, 7471A

Sample D1H220253-004 was analyzed at a dilution due to the concentration of target analytes in the sample. The reporting limits have been raised accordingly.

No other anomalies were observed.

EXECUTIVE SUMMARY - Detection Highlights

D1H220253

PARAMETER	RESULT	REPORTING LIMIT	UNITS	ANALYTICAL METHOD
S-18"PIPE 08/20/01 12:15 001				
Aroclor 1248	2500	900	ug/kg	SW846 8082
Mercury	0.075	0.045	mg/kg	SW846 7471A
Arsenic	69.9	1.4	mg/kg	SW846 6010B
Lead	11.6	1.1	mg/kg	SW846 6010B
Barium	32.7	1.4	mg/kg	SW846 6010B
Chromium	103	1.4	mg/kg	SW846 6010B
Fluorene	1600 J	1800	ug/kg	SW846 8270C
Phenanthrene	2700	1800	ug/kg	SW846 8270C
Pyrene	680 J	1800	ug/kg	SW846 8270C
Percent Moisture	27.0	0.10	%	MCAWW 160.3 MOD
E-TP-2(4') 08/21/01 09:20 002				
Aroclor 1248	2700	360	ug/kg	SW846 8082
Mercury	0.050	0.036	mg/kg	SW846 7471A
Arsenic	5.9	1.1	mg/kg	SW846 6010B
Cadmium	0.067 B	0.55	mg/kg	SW846 6010B
Lead	11.8	0.88	mg/kg	SW846 6010B
Barium	44.1	1.1	mg/kg	SW846 6010B
Chromium	151	1.1	mg/kg	SW846 6010B
Fluorene	150 J	360	ug/kg	SW846 8270C
Percent Moisture	9.2	0.10	%	MCAWW 160.3 MOD
B-TP-3(4') 08/21/01 10:55 003				
Aroclor 1248	200	37	ug/kg	SW846 8082
Aroclor 1248	260	37	ug/kg	SW846 8082
Aroclor 1260	20 J	37	ug/kg	SW846 8082
Aroclor 1260	38	37	ug/kg	SW846 8082
Mercury	0.021 B	0.037	mg/kg	SW846 7471A
Arsenic	1.2	1.1	mg/kg	SW846 6010B
Cadmium	0.054 B	0.57	mg/kg	SW846 6010B
Lead	8.1	0.91	mg/kg	SW846 6010B
Barium	20.2	1.1	mg/kg	SW846 6010B
Chromium	969	1.1	mg/kg	SW846 6010B
1,2-Dichlorobenzene	34	5.7	ug/kg	SW846 8260B
Methylene chloride	1.2 J	5.7	ug/kg	SW846 8260B
Isopropylbenzene	2.3 J	5.7	ug/kg	SW846 8260B
Percent Moisture	11.7	0.10	%	MCAWW 160.3 MOD

(Continued on next page)

EXECUTIVE SUMMARY - Detection Highlights

D1H220253

PARAMETER	RESULT	REPORTING LIMIT	UNITS	ANALYTICAL METHOD
B-TP-3(5') 08/21/01 10:45 004				
Aroclor 1248	4300	1200	ug/kg	SW846 8082
Mercury	0.087	0.062	mg/kg	SW846 7471A
Lead	11.2 B	15.0	mg/kg	SW846 6010B
Barium	23.1	18.7	mg/kg	SW846 6010B
Chromium	2470	18.7	mg/kg	SW846 6010B
Fluorene	2300	1200	ug/kg	SW846 8270C
Phenanthrene	1300	1200	ug/kg	SW846 8270C
1,2-Dichlorobenzene	4200 J	7500	ug/kg	SW846 8260B
Percent Moisture	46.6	0.10	%	MCAWW 160.3 MOD

METHODS SUMMARY

D1H220253

PARAMETER	ANALYTICAL METHOD	PREPARATION METHOD
Inductively Coupled Plasma (ICP) Metals	SW846 6010B	SW846 3050B
Mercury in Solid Waste (Manual Cold-Vapor)	SW846 7471A	SW846 7471A
Percent Moisture	MCAWW 160.3 MOD	MCAWW 160.3 MOD
PCBs by SW-846 8082	SW846 8082	SW846 3550
Semivolatile Organic Compounds by GC/MS	SW846 8270C	SW846 3550B
Trace Inductively Coupled Plasma (ICP) Metals	SW846 6010B	SW846 3050B
Volatile Organics by GC/MS	SW846 8260B	SW846 5030B/826
Volatile Organics by GC/MS	SW846 8260B	SW846 5035

References:

MCAWW "Methods for Chemical Analysis of Water and Wastes", EPA-600/4-79-020, March 1983 and subsequent revisions.

SW846 "Test Methods for Evaluating Solid Waste, Physical/Chemical Methods", Third Edition, November 1986 and its updates.

METHOD / ANALYST SUMMARY

D1H220253

ANALYTICAL METHOD	ANALYST	ANALYST ID
MCAWW 160.3 MOD	Claire Likar	004382
SW846 6010B	Steve Mustain	006720
SW846 7471A	Thomas Lill	006929
SW846 8082	Karla Garcia	000205
SW846 8260B	Dan Appelhans	001008
SW846 8260B	Josh Yanez	001198
SW846 8270C	Xiayasang Leewaphath	006600

References:

MCAWW "Methods for Chemical Analysis of Water and Wastes", EPA-600/4-79-020, March 1983 and subsequent revisions.

SW846 "Test Methods for Evaluating Solid Waste, Physical/Chemical Methods", Third Edition, November 1986 and its updates.

SAMPLE SUMMARY

D1H220253

WO #	SAMPLE#	CLIENT SAMPLE ID	SAMPLED DATE	SAMP TIME
EJD8V	001	S-18"PIPE	08/20/01	12:15
EJD8X	002	E-TP-2(4)	08/21/01	09:20
EJD82	003	B-TP-3(4)	08/21/01	10:55
EJD84	004	B-TP-3(5)	08/21/01	10:45
EJD86	005	TRIP BLANK	08/21/01	

NOTE(S):

- The analytical results of the samples listed above are presented on the following pages.
- All calculations are performed before rounding to avoid round-off errors in calculated results.
- Results noted as "ND" were not detected at or above the stated limit.
- This report must not be reproduced, except in full, without the written approval of the laboratory.
- Results for the following parameters are never reported on a dry weight basis: color, corrosivity, density, flashpoint, ignitability, layers, odor, paint filter test, pH, porosity pressure, reactivity, redox potential, specific gravity, spot tests, solids, solubility, temperature, viscosity, and weight.

URS

Client Sample ID: S-18"PIPE

GC/MS Volatiles

Lot-Sample #...: D1H220253-001 Work Order #...: EJD8V1AM Matrix.....: SD
Date Sampled...: 08/20/01 12:15 Date Received..: 08/22/01
Prep Date.....: 08/30/01 Analysis Date..: 08/31/01
Prep Batch #...: 1243335 Analysis Time..: 00:37
Dilution Factor: 1

Method.....: SW846 8260B

PARAMETER	RESULT	REPORTING LIMIT	UNITS	MDL
Acetone	ND	1400	ug/kg	350
Acrolein	ND	6800	ug/kg	300
Acrylonitrile	ND	6800	ug/kg	490
Benzene	ND	340	ug/kg	32
Bromodichloromethane	ND	340	ug/kg	27
Bromoform	ND	340	ug/kg	57
Bromomethane	ND	680	ug/kg	59
2-Butanone (MEK)	ND	1400	ug/kg	410
Carbon disulfide	ND	340	ug/kg	28
Carbon tetrachloride	ND	340	ug/kg	32
Chlorobenzene	ND	340	ug/kg	48
Chloroethane	ND	680	ug/kg	30
Chloroform	ND	680	ug/kg	27
hloromethane	ND	680	ug/kg	54
Dibromochloromethane	ND	340	ug/kg	45
Dibromomethane	ND	340	ug/kg	69
1,2-Dibromoethane (EDB)	ND	340	ug/kg	53
1,2-Dichlorobenzene	ND	340	ug/kg	27
1,3-Dichlorobenzene	ND	340	ug/kg	28
1,4-Dichlorobenzene	ND	340	ug/kg	32
Dichlorodifluoromethane	ND	680	ug/kg	53
1,1-Dichloroethane	ND	340	ug/kg	35
1,2-Dichloroethane	ND	340	ug/kg	28
1,1-Dichloroethene	ND	340	ug/kg	28
cis-1,2-Dichloroethene	ND	170	ug/kg	45
trans-1,2-Dichloroethene	ND	170	ug/kg	27
1,2-Dichloroethene (total)	ND	340	ug/kg	76
1,2-Dichloropropane	ND	340	ug/kg	32
cis-1,3-Dichloropropene	ND	340	ug/kg	43
trans-1,3-Dichloropropene	ND	340	ug/kg	56
trans-1,4-Dichloro-2-butene	ND	340	ug/kg	140
1,4-Dioxane	ND	34000	ug/kg	1700
Ethanol	ND	34000	ug/kg	8400
Ethylbenzene	ND	340	ug/kg	58
Ethyl methacrylate	ND	340	ug/kg	39
Hexane	ND	340	ug/kg	41

(Continued on next page)

URS

Client Sample ID: S-18"PIPE

GC/MS Volatiles

Lot-Sample #...: D1H220253-001 Work Order #...: EJD8V1AM Matrix.....: SD

PARAMETER	RESULT	REPORTING LIMIT	UNITS	MDL
2-Hexanone	ND	1400	ug/kg	170
Iodomethane	ND	340	ug/kg	33
Methylene chloride	ND	340	ug/kg	60
4-Methyl-2-pentanone	ND	1400	ug/kg	96
Methyl tert-butyl ether	ND	1400	ug/kg	40
Styrene	ND	340	ug/kg	51
1,1,2,2-Tetrachloroethane	ND	340	ug/kg	63
tert-Butyl alcohol	ND	14000	ug/kg	760
Tetrachloroethene	ND	340	ug/kg	58
Tetrahydrofuran	ND	1400	ug/kg	92
Toluene	ND	340	ug/kg	49
1,1,1-Trichloroethane	ND	340	ug/kg	27
1,1,2-Trichloroethane	ND	340	ug/kg	74
Trichloroethene	ND	340	ug/kg	35
Trichlorofluoromethane	ND	680	ug/kg	71
1,2,3-Trichloropropane	ND	340	ug/kg	130
Trichlorotrifluoroethane	ND	1400	ug/kg	41
Vinyl acetate	ND	680	ug/kg	62
Vinyl chloride	ND	680	ug/kg	40
Xylenes (total)	ND	340	ug/kg	96
Dichlorofluoromethane	ND	680	ug/kg	8400
Ethyl ether	ND	680	ug/kg	28
Acetonitrile	ND	6800	ug/kg	1100
Chloroprene	ND	340	ug/kg	37
Isopropyl ether	ND	3400	ug/kg	140
Propionitrile	ND	680	ug/kg	400
Allyl chloride	ND	680	ug/kg	29
Ethyl acetate	ND	680	ug/kg	190
Methacrylonitrile	ND	340	ug/kg	86
Isobutyl alcohol	ND	14000	ug/kg	3900
Methyl methacrylate	ND	340	ug/kg	86
n-Butanol	ND	14000	ug/kg	2800
2-Nitropropane	ND	680	ug/kg	130
1,1,1,2-Tetrachloroethane	ND	340	ug/kg	44
Cyclohexanone	ND	17000	ug/kg	3200
Isopropylbenzene	ND	340	ug/kg	51
1,2-Dibromo-3-chloropropane (DBCP)	ND	680	ug/kg	43

SURROGATE	PERCENT RECOVERY	RECOVERY LIMITS
Dibromofluoromethane	70	(69 - 121)
1,2-Dichloroethane-d4	52 *	(60 - 117)
4-Bromofluorobenzene	61	(48 - 129)
Toluene-d8	54 *	(57 - 138)

(Continued on next page)

URS

Client Sample ID: S-18"PIPE

GC/MS Volatiles

Lot-Sample #...: D1H220253-001 Work Order #...: EJD8V1AM Matrix.....: SD

NOTE(S):

* Surrogate recovery is outside stated control limits.

Results and reporting limits have been adjusted for dry weight.

URS

Client Sample ID: S-18"PIPE

GC/MS Semivolatiles

Lot-Sample #...: D1H220253-001 Work Order #...: EJD8V1AC Matrix.....: SD
Date Sampled...: 08/20/01 12:15 Date Received..: 08/22/01
Prep Date.....: 08/23/01 Analysis Date..: 08/28/01
Prep Batch #...: 1235171 Analysis Time..: 02:20
Dilution Factor: 4

Method.....: SW846 8270C

PARAMETER	RESULT	REPORTING LIMIT	UNITS	MDL
Anthracene	ND	1800	ug/kg	430
Acenaphthene	ND	1800	ug/kg	250
Acenaphthylene	ND	1800	ug/kg	190
Benzo(a)anthracene	ND	1800	ug/kg	210
Benzo(a)pyrene	ND	1800	ug/kg	510
Chrysene	ND	1800	ug/kg	290
Dibenz(a,h)anthracene	ND	1800	ug/kg	260
Benzo(b)fluoranthene	ND	1800	ug/kg	550
Benzo(ghi)perylene	ND	1800	ug/kg	380
Benzo(k)fluoranthene	ND	1800	ug/kg	510
Fluoranthene	ND	1800	ug/kg	460
Fluorene	**1600 J**	**1800**	**ug/kg**	**420**
Phenanthrene	**2700**	**1800**	**ug/kg**	**200**
yrene	**680 J**	**1800**	**ug/kg**	**220**
Indeno(1,2,3-cd)pyrene	ND	1800	ug/kg	260
Naphthalene	ND	1800	ug/kg	380

SURROGATE	PERCENT RECOVERY	RECOVERY LIMITS
2-Fluorophenol	DIL,NC	(34 - 97)
Phenol-d5	DIL,NC	(39 - 90)
Nitrobenzene-d5	DIL,NC	(33 - 97)
2-Fluorobiphenyl	DIL,NC	(39 - 91)
2,4,6-Tribromophenol	DIL,NC	(29 - 95)
Terphenyl-d14	DIL,NC	(30 - 102)

NOTE(S):

DIL The concentration is estimated or not reported due to dilution or the presence of interfering analytes.

NC The recovery and/or RPD were not calculated.

Results and reporting limits have been adjusted for dry weight.

J Estimated result. Result is less than RL.

URS

Client Sample ID: S-18"PIPE

GC Semivolatiles

Lot-Sample #...: D1H220253-001 Work Order #...: EJD8V1AD Matrix.....: SD
Date Sampled...: 08/20/01 12:15 Date Received..: 08/22/01
Prep Date.....: 08/28/01 Analysis Date..: 09/04/01
Prep Batch #...: 1240213 Analysis Time..: 12:51
Dilution Factor: 20

Method.....: SW846 8082

PARAMETER	RESULT	REPORTING LIMIT	UNITS	MDL
Aroclor 1016	ND	900	ug/kg	270
Aroclor 1221	ND	900	ug/kg	190
Aroclor 1232	ND	900	ug/kg	240
Aroclor 1242	ND	900	ug/kg	230
Aroclor 1248	**2500**	**900**	**ug/kg**	**170**
Aroclor 1254	ND	900	ug/kg	170
Aroclor 1260	ND	900	ug/kg	160

SURROGATE	PERCENT RECOVERY	RECOVERY LIMITS
Decachlorobiphenyl	0.0 DIL,NC	(62 - 145)
Tetrachloro-m-xylene	0.0 DIL,NC	(60 - 130)

NOTE(S):

DIL The concentration is estimated or not reported due to dilution or the presence of interfering analytes.

NC The recovery and/or RPD were not calculated.

Results and reporting limits have been adjusted for dry weight.

URS

Client Sample ID: S-18"PIPE

TOTAL Metals

Lot-Sample #...: D1H220253-001 Matrix.....: SD
Date Sampled...: 08/20/01 12:15 Date Received..: 08/22/01

PARAMETER	RESULT	REPORTING LIMIT	UNITS	METHOD	PREPARATION-ANALYSIS DATE	WORK ORDER #
Prep Batch #...: 1239374						
Silver	ND	1.4	mg/kg	SW846 6010B	08/29-08/30/01	EJD8V1AL
		Dilution Factor: 1		Analysis Time..: 19:04	MDL.....: 0.097	
Arsenic	69.9	1.4	mg/kg	SW846 6010B	08/29-08/30/01	EJD8V1AG
		Dilution Factor: 1		Analysis Time..: 19:04	MDL.....: 0.40	
Barium	32.7	1.4	mg/kg	SW846 6010B	08/29-08/30/01	EJD8V1AE
		Dilution Factor: 1		Analysis Time..: 19:04	MDL.....: 0.068	
Cadmium	ND	0.68	mg/kg	SW846 6010B	08/29-08/30/01	EJD8V1AH
		Dilution Factor: 1		Analysis Time..: 19:04	MDL.....: 0.045	
Chromium	103	1.4	mg/kg	SW846 6010B	08/29-08/30/01	EJD8V1AF
		Dilution Factor: 1		Analysis Time..: 19:04	MDL.....: 0.31	
Lead	11.6	1.1	mg/kg	SW846 6010B	08/29-08/30/01	EJD8V1AJ
		Dilution Factor: 1		Analysis Time..: 19:04	MDL.....: 0.29	
Selenium	ND	1.8	mg/kg	SW846 6010B	08/29-08/30/01	EJD8V1AK
		Dilution Factor: 1		Analysis Time..: 19:04	MDL.....: 0.53	
Prep Batch #...: 1241416						
Mercury	0.075	0.045	mg/kg	SW846 7471A	09/05/01	EJD8V1AN
		Dilution Factor: 1		Analysis Time..: 12:05	MDL.....: 0.0036	

NOTE(S):

Results and reporting limits have been adjusted for dry weight.

URS

Client Sample ID: S-18"PIPE

General Chemistry

Lot-Sample #...: D1H220253-001 Work Order #...: EJD8V Matrix.....: SD
Date Sampled...: 08/20/01 12:15 Date Received..: 08/22/01

PARAMETER	RESULT	RL	UNITS	METHOD	PREPARATION-ANALYSIS DATE	PREP BATCH #
Percent Moisture	27.0	0.10	%	MCAWW 160.3 MOD	08/30/01	1243217

Dilution Factor: 1 Analysis Time..: 16:00 MDL.....:

URS

Client Sample ID: E-TP-2(4)

GC/MS Volatiles

Lot-Sample #...: D1H220253-002 Work Order #...: EJD8X1AC Matrix.....: SO
Date Sampled...: 08/21/01 09:20 Date Received..: 08/22/01
Prep Date.....: 08/22/01 Analysis Date..: 08/30/01
Prep Batch #...: 1243446 Analysis Time..: 22:27
Dilution Factor: 10

Method.....: SW846 8260B

PARAMETER	RESULT	REPORTING LIMIT	UNITS	MDL
Chloromethane	ND	5500	ug/kg	440
Dibromochloromethane	ND	2800	ug/kg	360
Dibromomethane	ND	2800	ug/kg	560
1,2-Dibromoethane (EDB)	ND	2800	ug/kg	420
1,2-Dichlorobenzene	ND	2800	ug/kg	220
1,3-Dichlorobenzene	ND	2800	ug/kg	220
1,4-Dichlorobenzene	ND	2800	ug/kg	260
Acetone	ND	11000	ug/kg	2800
Acrolein	ND	55000	ug/kg	2400
Acrylonitrile	ND	55000	ug/kg	4000
Benzene	ND	2800	ug/kg	260
Bromodichloromethane	ND	2800	ug/kg	220
Bromoform	ND	2800	ug/kg	460
Bromomethane	ND	5500	ug/kg	470
2-Butanone (MEK)	ND	11000	ug/kg	3300
Carbon disulfide	ND	2800	ug/kg	220
Carbon tetrachloride	ND	2800	ug/kg	260
Chlorobenzene	ND	2800	ug/kg	380
Chloroethane	ND	5500	ug/kg	240
Chloroform	ND	2800	ug/kg	220
Dichlorodifluoromethane	ND	5500	ug/kg	430
1,1-Dichloroethane	ND	2800	ug/kg	280
1,2-Dichloroethane	ND	2800	ug/kg	230
1,1-Dichloroethene	ND	2800	ug/kg	230
cis-1,2-Dichloroethene	ND	1400	ug/kg	360
trans-1,2-Dichloroethene	ND	1400	ug/kg	220
1,2-Dichloroethene (total)	ND	2800	ug/kg	610
1,2-Dichloropropane	ND	2800	ug/kg	260
cis-1,3-Dichloropropene	ND	2800	ug/kg	350
trans-1,3-Dichloropropene	ND	2800	ug/kg	450
trans-1,4-Dichloro-2-butene	ND	2800	ug/kg	1100
1,4-Dioxane	ND	280000	ug/kg	14000
Ethanol	ND	280000	ug/kg	68000
Ethylbenzene	ND	2800	ug/kg	460
Ethyl methacrylate	ND	2800	ug/kg	310
Hexane	ND	2800	ug/kg	330

(Continued on next page)

URS

Client Sample ID: E-TP-2(4)

GC/MS Volatiles

Lot-Sample #...: D1H220253-002 Work Order #...: EJD8X1AC Matrix.....: SO

PARAMETER	RESULT	REPORTING LIMIT	UNITS	MDL
2-Hexanone	ND	11000	ug/kg	1400
Iodomethane	ND	2800	ug/kg	260
Methylene chloride	ND	2800	ug/kg	480
4-Methyl-2-pentanone	ND	11000	ug/kg	770
Methyl tert-butyl ether	ND	2800	ug/kg	320
Styrene	ND	2800	ug/kg	410
1,1,2,2-Tetrachloroethane	ND	2800	ug/kg	510
tert-Butyl alcohol	ND	110000	ug/kg	6100
Tetrachloroethene	ND	2800	ug/kg	470
Tetrahydrofuran	ND	11000	ug/kg	740
Toluene	ND	2800	ug/kg	390
1,1,1-Trichloroethane	ND	2800	ug/kg	220
1,1,2-Trichloroethane	ND	2800	ug/kg	590
Trichloroethene	ND	2800	ug/kg	280
Trichlorofluoromethane	ND	5500	ug/kg	570
1,2,3-Trichloropropane	ND	2800	ug/kg	1100
Trichlorotrifluoroethane	ND	11000	ug/kg	330
Vinyl acetate	ND	5500	ug/kg	500
Vinyl chloride	ND	5500	ug/kg	320
Xylenes (total)	ND	2800	ug/kg	770
Dichlorofluoromethane	ND	5500	ug/kg	68000
Ethyl ether	ND	5500	ug/kg	230
Acetonitrile	ND	55000	ug/kg	8500
Chloroprene	ND	2800	ug/kg	300
Isopropyl ether	ND	28000	ug/kg	1100
Propionitrile	ND	11000	ug/kg	3200
Ethyl acetate	ND	5500	ug/kg	1600
Methacrylonitrile	ND	28000	ug/kg	690
Isobutyl alcohol	ND	110000	ug/kg	31000
Methyl methacrylate	ND	2800	ug/kg	690
n-Butanol	ND	110000	ug/kg	23000
2-Nitropropane	ND	5500	ug/kg	1100
1,1,1,2-Tetrachloroethane	ND	2800	ug/kg	350
Cyclohexanone	ND	140000	ug/kg	26000
Isopropylbenzene	ND	2800	ug/kg	410
1,2-Dibromo-3-chloropropane (DBCP)	ND	5500	ug/kg	350

SURROGATE	PERCENT RECOVERY	RECOVERY LIMITS
Dibromofluoromethane	0.0 DIL,NC	(69 - 121)
1,2-Dichloroethane-d4	0.0 DIL,NC	(60 - 117)
4-Bromofluorobenzene	0.0 DIL,NC	(48 - 129)
Toluene-d8	0.0 DIL,NC	(57 - 138)

(Continued on next page)

URS

Client Sample ID: E-TP-2(4)

GC/MS Volatiles

Lot-Sample #...: D1H220253-002 Work Order #...: EJD8X1AC Matrix.....: SO

NOTE(S):

DIL The concentration is estimated or not reported due to dilution or the presence of interfering analytes.

NC The recovery and/or RPD were not calculated.

Results and reporting limits have been adjusted for dry weight.

URS

Client Sample ID: E-TP-2(4)

GC/MS Semivolatiles

Lot-Sample #...: D1H220253-002 Work Order #...: EJD8X1AD Matrix.....: SO
Date Sampled...: 08/21/01 09:20 Date Received..: 08/22/01
Prep Date.....: 08/23/01 Analysis Date..: 08/28/01
Prep Batch #...: 1235171 Analysis Time..: 00:30
Dilution Factor: 1
Method.....: SW846 8270C

PARAMETER	RESULT	REPORTING LIMIT	UNITS	MDL
Anthracene	ND	360	ug/kg	86
Acenaphthene	ND	360	ug/kg	51
Acenaphthylene	ND	360	ug/kg	37
Benzo(a)anthracene	ND	360	ug/kg	43
Benzo(a)pyrene	ND	360	ug/kg	100
Chrysene	ND	360	ug/kg	59
Dibenz(a,h)anthracene	ND	360	ug/kg	52
Benzo(b)fluoranthene	ND	360	ug/kg	110
Benzo(ghi)perylene	ND	360	ug/kg	77
Benzo(k)fluoranthene	ND	360	ug/kg	100
Fluoranthene	ND	360	ug/kg	93
Fluorene	**150 J**	**360**	**ug/kg**	**84**
Phenanthrene	ND	360	ug/kg	41
Pyrene	ND	360	ug/kg	44
Indeno(1,2,3-cd)pyrene	ND	360	ug/kg	53
Naphthalene	ND	360	ug/kg	77

SURROGATE	PERCENT RECOVERY	RECOVERY LIMITS
2-Fluorophenol	55	(34 - 97)
Phenol-d5	56	(39 - 90)
Nitrobenzene-d5	55	(33 - 97)
2-Fluorobiphenyl	54	(39 - 91)
2,4,6-Tribromophenol	55	(29 - 95)
Terphenyl-d14	57	(30 - 102)

NOTE(S):

Results and reporting limits have been adjusted for dry weight.

J Estimated result. Result is less than RL.

URS

Client Sample ID: E-TP-2(4)

GC Semivolatiles

Lot-Sample #...: D1H220253-002 Work Order #...: EJD8X1AE Matrix.....: SO
Date Sampled...: 08/21/01 09:20 Date Received..: 08/22/01
Prep Date.....: 08/28/01 Analysis Date..: 09/04/01
Prep Batch #...: 1240213 Analysis Time..: 14:32
Dilution Factor: 10

Method.....: SW846 8082

PARAMETER	RESULT	REPORTING LIMIT	UNITS	MDL
Aroclor 1016	ND	360	ug/kg	110
Aroclor 1221	ND	360	ug/kg	76
Aroclor 1232	ND	360	ug/kg	95
Aroclor 1242	ND	360	ug/kg	92
Aroclor 1248	**2700**	**360**	**ug/kg**	**66**
Aroclor 1254	ND	360	ug/kg	67
Aroclor 1260	ND	360	ug/kg	66

SURROGATE	PERCENT RECOVERY	RECOVERY LIMITS
Decachlorobiphenyl	0.0 DIL,NC	(62 - 145)
Tetrachloro-m-xylene	0.0 DIL,NC	(60 - 130)

OTE(S):

DIL The concentration is estimated or not reported due to dilution or the presence of interfering analytes.

NC The recovery and/or RPD were not calculated.

Results and reporting limits have been adjusted for dry weight.

URS

Client Sample ID: E-TP-2(4)

TOTAL Metals

Lot-Sample #...: D1H220253-002 Matrix.....: SO
Date Sampled...: 08/21/01 09:20 Date Received..: 08/22/01

PARAMETER	RESULT	REPORTING LIMIT	UNITS	METHOD	PREPARATION-ANALYSIS DATE	WORK ORDER #
Prep Batch #...: 1239374						
Silver	ND	1.1	mg/kg	SW846 6010B	08/29-08/30/01	EJD8X1AM
		Dilution Factor: 1		Analysis Time..: 19:08	MDL.....: 0.078	
Arsenic	5.9	1.1	mg/kg	SW846 6010B	08/29-08/30/01	EJD8X1AH
		Dilution Factor: 1		Analysis Time..: 19:08	MDL.....: 0.32	
Barium	44.1	1.1	mg/kg	SW846 6010B	08/29-08/30/01	EJD8X1AF
		Dilution Factor: 1		Analysis Time..: 19:08	MDL.....: 0.055	
Cadmium	0.067 B	0.55	mg/kg	SW846 6010B	08/29-08/30/01	EJD8X1AJ
		Dilution Factor: 1		Analysis Time..: 19:08	MDL.....: 0.036	
Chromium	151	1.1	mg/kg	SW846 6010B	08/29-08/30/01	EJD8X1AG
		Dilution Factor: 1		Analysis Time..: 19:08	MDL.....: 0.25	
Lead	11.8	0.88	mg/kg	SW846 6010B	08/29-08/30/01	EJD8X1AK
		Dilution Factor: 1		Analysis Time..: 19:08	MDL.....: 0.23	
Selenium	ND	1.4	mg/kg	SW846 6010B	08/29-08/30/01	EJD8X1AL
		Dilution Factor: 1		Analysis Time..: 19:08	MDL.....: 0.43	
Prep Batch #...: 1241416						
Mercury	0.050	0.036	mg/kg	SW846 7471A	09/05/01	EJD8X1AN
		Dilution Factor: 1		Analysis Time..: 12:07	MDL.....: 0.0029	

NOTE(S):

Results and reporting limits have been adjusted for dry weight.

B Estimated result. Result is less than RL.

URS

Client Sample ID: E-TP-2(4)

General Chemistry

Lot-Sample #...: D1H220253-002 Work Order #...: EJD8X Matrix.....: SO
Date Sampled...: 08/21/01 09:20 Date Received..: 08/22/01

PARAMETER	RESULT	RL	UNITS	METHOD	PREPARATION-ANALYSIS DATE	PREP BATCH #
Percent Moisture	9.2	0.10	%	MCAWW 160.3 MOD	08/30/01	1243217

Dilution Factor: 1 Analysis Time..: 16:00 MDL.....:

URS

Client Sample ID: B-TP-3(4)

GC/MS Volatiles

Lot-Sample #...: D1H220253-003 Work Order #...: EJD821AC Matrix.....: SO
Date Sampled...: 08/21/01 10:55 Date Received..: 08/22/01
Prep Date.....: 08/22/01 Analysis Date..: 08/24/01
Prep Batch #...: 1239384 Analysis Time..: 13:10
Dilution Factor: 1

Method.....: SW846 8260B

PARAMETER	RESULT	REPORTING LIMIT	UNITS	MDL
Chloromethane	ND	11	ug/kg	1.0
Dibromochloromethane	ND	5.7	ug/kg	0.57
Dibromomethane	ND	5.7	ug/kg	0.57
1,2-Dibromoethane (EDB)	ND	5.7	ug/kg	0.57
1,2-Dichlorobenzene	**34**	**5.7**	**ug/kg**	**1.9**
1,3-Dichlorobenzene	ND	5.7	ug/kg	2.3
1,4-Dichlorobenzene	ND	5.7	ug/kg	2.0
Acetone	ND	23	ug/kg	3.9
Acrolein	ND	110	ug/kg	43
Acrylonitrile	ND	110	ug/kg	6.7
Benzene	ND	5.7	ug/kg	0.57
Bromodichloromethane	ND	5.7	ug/kg	0.57
Bromoform	ND	5.7	ug/kg	0.57
Bromomethane	ND	11	ug/kg	0.57
2-Butanone (MEK)	ND	23	ug/kg	2.7
Carbon disulfide	ND	5.7	ug/kg	0.59
Carbon tetrachloride	ND	5.7	ug/kg	0.61
Chlorobenzene	ND	5.7	ug/kg	1.1
Chloroethane	ND	11	ug/kg	0.57
Chloroform	ND	5.7	ug/kg	0.57
Dichlorodifluoromethane	ND	11	ug/kg	0.70
1,1-Dichloroethane	ND	5.7	ug/kg	0.74
1,2-Dichloroethane	ND	5.7	ug/kg	0.63
1,1-Dichloroethene	ND	5.7	ug/kg	0.80
cis-1,2-Dichloroethene	ND	2.8	ug/kg	0.63
trans-1,2-Dichloroethene	ND	2.8	ug/kg	0.87
1,2-Dichloroethene (total)	ND	5.7	ug/kg	1.5
1,2-Dichloropropane	ND	5.7	ug/kg	0.57
cis-1,3-Dichloropropene	ND	5.7	ug/kg	0.82
trans-1,3-Dichloropropene	ND	5.7	ug/kg	0.60
trans-1,4-Dichloro-2-butene	ND	5.7	ug/kg	1.2
1,4-Dioxane	ND	570	ug/kg	49
Ethanol	ND	570	ug/kg	53
Ethylbenzene	ND	5.7	ug/kg	1.3
Ethyl methacrylate	ND	5.7	ug/kg	0.68
Hexane	ND	5.7	ug/kg	0.93

(Continued on next page)

URS

Client Sample ID: B-TP-3(4)

GC/MS Volatiles

Lot-Sample #...: D1H220253-003 Work Order #...: EJD821AC Matrix.....: SO

PARAMETER	RESULT	REPORTING LIMIT	UNITS	MDL
2-Hexanone	ND	23	ug/kg	1.9
Iodomethane	ND	5.7	ug/kg	0.57
Methylene chloride	**1.2 J**	**5.7**	**ug/kg**	**0.57**
4-Methyl-2-pentanone	ND	23	ug/kg	1.4
Methyl tert-butyl ether	ND	5.7	ug/kg	0.57
Styrene	ND	5.7	ug/kg	1.4
1,1,2,2-Tetrachloroethane	ND	5.7	ug/kg	0.57
tert-Butyl alcohol	ND	230	ug/kg	14
Tetrachloroethene	ND	5.7	ug/kg	1.2
Tetrahydrofuran	ND	23	ug/kg	1.4
Toluene	ND	5.7	ug/kg	0.92
1,1,1-Trichloroethane	ND	5.7	ug/kg	0.57
1,1,2-Trichloroethane	ND	5.7	ug/kg	1.1
Trichloroethene	ND	5.7	ug/kg	0.70
Trichlorofluoromethane	ND	11	ug/kg	0.62
1,2,3-Trichloropropane	ND	5.7	ug/kg	1.3
Trichlorotrifluoroethane	ND	23	ug/kg	0.76
Vinyl acetate	ND	11	ug/kg	5.0
Vinyl chloride	ND	11	ug/kg	0.88
Xylenes (total)	ND	5.7	ug/kg	3.5
Dichlorofluoromethane	ND	11	ug/kg	1.2
Ethyl ether	ND	11	ug/kg	0.57
Acetonitrile	ND	110	ug/kg	19
Chloroprene	ND	5.7	ug/kg	0.94
Isopropyl ether	ND	57	ug/kg	2.8
Propionitrile	ND	23	ug/kg	7.1
Ethyl acetate	ND	11	ug/kg	3.7
Methacrylonitrile	ND	57	ug/kg	5.7
Isobutyl alcohol	ND	230	ug/kg	13
Methyl methacrylate	ND	5.7	ug/kg	1.5
n-Butanol	ND	230	ug/kg	15
2-Nitropropane	ND	11	ug/kg	2.8
1,1,1,2-Tetrachloroethane	ND	5.7	ug/kg	1.5
Cyclohexanone	ND	280	ug/kg	12
Isopropylbenzene	**2.3 J**	**5.7**	**ug/kg**	**1.5**
1,2-Dibromo-3-chloropropane (DBCP)	ND	11	ug/kg	0.77

SURROGATE	PERCENT RECOVERY	RECOVERY LIMITS
Dibromofluoromethane	108	(80 - 120)
1,2-Dichloroethane-d4	111	(79 - 125)
4-Bromofluorobenzene	98	(71 - 132)
Toluene-d8	85	(77 - 117)

(Continued on next page)

URS

Client Sample ID: B-TP-3(4)

GC/MS Volatiles

Lot-Sample #...: D1H220253-003 Work Order #...: EJD821AC Matrix.....: SO

NOTE(S):

Results and reporting limits have been adjusted for dry weight.

J Estimated result. Result is less than RL.

URS

Client Sample ID: B-TP-3(4)

GC/MS Semivolatiles

Lot-Sample #...: D1H220253-003 Work Order #...: EJD821AD Matrix.....: SO
Date Sampled...: 08/21/01 10:55 Date Received..: 08/22/01
Prep Date.....: 08/23/01 Analysis Date..: 08/28/01
Prep Batch #...: 1235171 Analysis Time..: 00:52
Dilution Factor: 1

Method.....: SW846 8270C

PARAMETER	RESULT	REPORTING LIMIT	UNITS	MDL
Anthracene	ND	370	ug/kg	88
Acenaphthene	ND	370	ug/kg	52
Acenaphthylene	ND	370	ug/kg	39
Benzo(a)anthracene	ND	370	ug/kg	44
Benzo(a)pyrene	ND	370	ug/kg	110
Chrysene	ND	370	ug/kg	60
Dibenz(a,h)anthracene	ND	370	ug/kg	53
Benzo(b)fluoranthene	ND	370	ug/kg	110
Benzo(ghi)perylene	ND	370	ug/kg	79
Benzo(k)fluoranthene	ND	370	ug/kg	110
Fluoranthene	ND	370	ug/kg	95
Fluorene	ND	370	ug/kg	86
Phenanthrene	ND	370	ug/kg	42
Pyrene	ND	370	ug/kg	45
Indeno(1,2,3-cd)pyrene	ND	370	ug/kg	54
Naphthalene	ND	370	ug/kg	79

SURROGATE	PERCENT RECOVERY	RECOVERY LIMITS
2-Fluorophenol	57	(34 - 97)
Phenol-d5	54	(39 - 90)
Nitrobenzene-d5	56	(33 - 97)
2-Fluorobiphenyl	58	(39 - 91)
2,4,6-Tribromophenol	60	(29 - 95)
Terphenyl-d14	58	(30 - 102)

NOTE(S):

Results and reporting limits have been adjusted for dry weight.

URS

Client Sample ID: B-TP-3(4)

GC Semivolatiles

Lot-Sample #...: D1H220253-003 Work Order #...: EJD821AE Matrix.....: SO
Date Sampled...: 08/21/01 10:55 Date Received..: 08/22/01
Prep Date.....: 08/28/01 Analysis Date..: 09/04/01
Prep Batch #...: 1240213 Analysis Time..: 15:06
Dilution Factor: 1

Method.....: SW846 8082

PARAMETER	RESULT	REPORTING LIMIT	UNITS	MDL
Aroclor 1016	ND	37	ug/kg	11
Aroclor 1221	ND	37	ug/kg	7.8
Aroclor 1232	ND	37	ug/kg	9.8
Aroclor 1242	ND	37	ug/kg	9.5
Aroclor 1248	**200**	**37**	**ug/kg**	**6.8**
Aroclor 1254	ND	37	ug/kg	6.9
Aroclor 1260	**20 J**	**37**	**ug/kg**	**6.8**

SURROGATE	PERCENT RECOVERY	RECOVERY LIMITS
Decachlorobiphenyl	40 *	(62 - 145)
Tetrachloro-m-xylene	25 *	(60 - 130)

OTE(S):

Surrogate recovery is outside stated control limits.

Results and reporting limits have been adjusted for dry weight.

J Estimated result. Result is less than RL.

URS

Client Sample ID: B-TP-3(4)

GC Semivolatiles

Lot-Sample #...: D1H220253-003 Work Order #...: EJD822AE Matrix.....: SO
Date Sampled...: 08/21/01 10:55 Date Received..: 08/22/01
Prep Date.....: 09/05/01 Analysis Date..: 09/07/01
Prep Batch #...: 1248200 Analysis Time..: 19:30
Dilution Factor: 1

Method.....: SW846 8082

PARAMETER	RESULT	REPORTING LIMIT	UNITS	MDL
Aroclor 1016	ND	37	ug/kg	11
Aroclor 1221	ND	37	ug/kg	7.8
Aroclor 1232	ND	37	ug/kg	9.8
Aroclor 1242	ND	37	ug/kg	9.5
Aroclor 1248	**260**	**37**	**ug/kg**	**6.8**
Aroclor 1254	ND	37	ug/kg	6.9
Aroclor 1260	**38**	**37**	**ug/kg**	**6.8**

SURROGATE	PERCENT RECOVERY	RECOVERY LIMITS
Decachlorobiphenyl	108	(62 - 145)
Tetrachloro-m-xylene	78	(60 - 130)

OTE(S):

Results and reporting limits have been adjusted for dry weight.

URS

Client Sample ID: B-TP-3(4)

TOTAL Metals

Lot-Sample #...: D1H220253-003 Matrix.....: SO
Date Sampled...: 08/21/01 10:55 Date Received..: 08/22/01

PARAMETER	RESULT	REPORTING LIMIT	UNITS	METHOD	PREPARATION-ANALYSIS DATE	WORK ORDER #
Prep Batch #...: 1239374						
Silver	ND	1.1	mg/kg	SW846 6010B	08/29-08/30/01	EJD821AM
		Dilution Factor: 1		Analysis Time..: 19:22	MDL.....: 0.080	
Arsenic	1.2	1.1	mg/kg	SW846 6010B	08/29-08/30/01	EJD821AH
		Dilution Factor: 1		Analysis Time..: 19:22	MDL.....: 0.33	
Barium	20.2	1.1	mg/kg	SW846 6010B	08/29-08/30/01	EJD821AF
		Dilution Factor: 1		Analysis Time..: 19:22	MDL.....: 0.057	
Cadmium	0.054 B	0.57	mg/kg	SW846 6010B	08/29-08/30/01	EJD821AJ
		Dilution Factor: 1		Analysis Time..: 19:22	MDL.....: 0.037	
Chromium	969	1.1	mg/kg	SW846 6010B	08/29-08/30/01	EJD821AG
		Dilution Factor: 1		Analysis Time..: 19:22	MDL.....: 0.26	
Lead	8.1	0.91	mg/kg	SW846 6010B	08/29-08/30/01	EJD821AK
		Dilution Factor: 1		Analysis Time..: 19:22	MDL.....: 0.24	
Selenium	ND	1.5	mg/kg	SW846 6010B	08/29-08/30/01	EJD821AL
		Dilution Factor: 1		Analysis Time..: 19:22	MDL.....: 0.44	
Prep Batch #...: 1241416						
Mercury	0.021 B	0.037	mg/kg	SW846 7471A	09/05/01	EJD821AN
		Dilution Factor: 1		Analysis Time..: 12:08	MDL.....: 0.0029	

NOTE(S):

Results and reporting limits have been adjusted for dry weight.

B Estimated result. Result is less than RL.

URS

Client Sample ID: B-TP-3(4)

General Chemistry

Lot-Sample #...: D1H220253-003 Work Order #...: EJD82 Matrix.....: SO
Date Sampled...: 08/21/01 10:55 Date Received..: 08/22/01

PARAMETER	RESULT	RL	UNITS	METHOD	PREPARATION-ANALYSIS DATE	PREP BATCH #
Percent Moisture	11.7	0.10	%	MCAWW 160.3 MOD	08/30/01	1243217

Dilution Factor: 1 Analysis Time..: 16:00 MDL.....:

URS

Client Sample ID: B-TP-3(5)

GC/MS Volatiles

Lot-Sample #...: D1H220253-004 Work Order #...: EJD841AC Matrix.....: SO
Date Sampled...: 08/21/01 10:45 Date Received..: 08/22/01
Prep Date.....: 08/22/01 Analysis Date..: 08/30/01
Prep Batch #...: 1243446 Analysis Time..: 22:53
Dilution Factor: 15.92

Method.....: SW846 8260B

PARAMETER	RESULT	REPORTING LIMIT	UNITS	MDL
Chloromethane	ND	15000	ug/kg	1200
Dibromochloromethane	ND	7500	ug/kg	970
Dibromomethane	ND	7500	ug/kg	1500
1,2-Dibromoethane (EDB)	ND	7500	ug/kg	1100
1,2-Dichlorobenzene	**4200 J**	**7500**	**ug/kg**	**600**
1,3-Dichlorobenzene	ND	7500	ug/kg	600
1,4-Dichlorobenzene	ND	7500	ug/kg	710
Acetone	ND	30000	ug/kg	7500
Acrolein	ND	150000	ug/kg	6500
Acrylonitrile	ND	150000	ug/kg	11000
Benzene	ND	7500	ug/kg	700
Bromodichloromethane	ND	7500	ug/kg	600
Bromoform	ND	7500	ug/kg	1200
romomethane	ND	15000	ug/kg	1300
2-Butanone (MEK)	ND	30000	ug/kg	9000
Carbon disulfide	ND	7500	ug/kg	610
Carbon tetrachloride	ND	7500	ug/kg	710
Chlorobenzene	ND	7500	ug/kg	1000
Chloroethane	ND	15000	ug/kg	650
Chloroform	ND	7500	ug/kg	600
1,2-Dichloroethane	ND	7500	ug/kg	620
1,1-Dichloroethene	ND	7500	ug/kg	620
cis-1,2-Dichloroethene	ND	3700	ug/kg	990
Dichlorodifluoromethane	ND	15000	ug/kg	1200
1,1-Dichloroethane	ND	7500	ug/kg	750
trans-1,2-Dichloroethene	ND	3700	ug/kg	600
1,2-Dichloroethene (total)	ND	7500	ug/kg	1600
1,2-Dichloropropane	ND	7500	ug/kg	700
cis-1,3-Dichloropropene	ND	7500	ug/kg	940
trans-1,3-Dichloropropene	ND	7500	ug/kg	1200
trans-1,4-Dichloro-2-butene	ND	7500	ug/kg	3000
1,4-Dioxane	ND	750000	ug/kg	37000
Ethanol	ND	750000	ug/kg	180000
Ethylbenzene	ND	7500	ug/kg	1300
Ethyl methacrylate	ND	7500	ug/kg	850
Hexane	ND	7500	ug/kg	890

(Continued on next page)

URS

Client Sample ID: B-TP-3(5)

GC/MS Volatiles

Lot-Sample #...: D1H220253-004 Work Order #...: EJD841AC Matrix.....: SO

PARAMETER	RESULT	REPORTING LIMIT	UNITS	MDL
2-Hexanone	ND	30000	ug/kg	3700
Iodomethane	ND	7500	ug/kg	710
Methylene chloride	ND	7500	ug/kg	1300
4-Methyl-2-pentanone	ND	30000	ug/kg	2100
Methyl tert-butyl ether	ND	7500	ug/kg	870
Styrene	ND	7500	ug/kg	1100
1,1,2,2-Tetrachloroethane	ND	7500	ug/kg	1400
tert-Butyl alcohol	ND	300000	ug/kg	17000
Tetrachloroethene	ND	7500	ug/kg	1300
Tetrahydrofuran	ND	30000	ug/kg	2000
Toluene	ND	7500	ug/kg	1100
1,1,1-Trichloroethane	ND	7500	ug/kg	600
1,1,2-Trichloroethane	ND	7500	ug/kg	1600
Trichloroethene	ND	7500	ug/kg	770
Trichlorofluoromethane	ND	15000	ug/kg	1500
1,2,3-Trichloropropane	ND	7500	ug/kg	2800
Trichlorotrifluoroethane	ND	30000	ug/kg	900
Vinyl acetate	ND	15000	ug/kg	1400
Vinyl chloride	ND	15000	ug/kg	870
Xylenes (total)	ND	7500	ug/kg	2100
Dichlorofluoromethane	ND	15000	ug/kg	180000
Ethyl ether	ND	15000	ug/kg	610
Acetonitrile	ND	150000	ug/kg	23000
Chloroprene	ND	7500	ug/kg	810
Isopropyl ether	ND	75000	ug/kg	3000
Propionitrile	ND	30000	ug/kg	8600
Ethyl acetate	ND	15000	ug/kg	4200
Methacrylonitrile	ND	75000	ug/kg	1900
Isobutyl alcohol	ND	300000	ug/kg	85000
Methyl methacrylate	ND	7500	ug/kg	1900
n-Butanol	ND	300000	ug/kg	61000
2-Nitropropane	ND	15000	ug/kg	2800
1,1,1,2-Tetrachloroethane	ND	7500	ug/kg	960
Cyclohexanone	ND	370000	ug/kg	70000
Isopropylbenzene	ND	7500	ug/kg	1100
1,2-Dibromo-3-chloropropane (DBCP)	ND	15000	ug/kg	940

SURROGATE	PERCENT RECOVERY	RECOVERY LIMITS
Dibromofluoromethane	0.0 DIL,NC	(69 - 121)
1,2-Dichloroethane-d4	0.0 DIL,NC	(60 - 117)
4-Bromofluorobenzene	0.0 DIL,NC	(48 - 129)
Toluene-d8	0.0 DIL,NC	(57 - 138)

(Continued on next page)

URS

Client Sample ID: B-TP-3(5)

GC/MS Volatiles

Lot-Sample #...: D1H220253-004 Work Order #...: EJD841AC Matrix.....: SO

NOTE(S):

DIL The concentration is estimated or not reported due to dilution or the presence of interfering analytes.

NC The recovery and/or RPD were not calculated.

Results and reporting limits have been adjusted for dry weight.

J Estimated result. Result is less than RL.

URS

Client Sample ID: B-TP-3(5)

GC/MS Semivolatiles

Lot-Sample #...: D1H220253-004 Work Order #...: EJD841AD Matrix.....: SO
Date Sampled...: 08/21/01 10:45 Date Received..: 08/22/01
Prep Date.....: 08/23/01 Analysis Date..: 08/28/01
Prep Batch #...: 1235171 Analysis Time..: 01:58
Dilution Factor: 2

Method.....: SW846 8270C

PARAMETER	RESULT	REPORTING LIMIT	UNITS	MDL
Anthracene	ND	1200	ug/kg	290
Acenaphthene	ND	1200	ug/kg	170
Acenaphthylene	ND	1200	ug/kg	130
Benzo(a)anthracene	ND	1200	ug/kg	150
Benzo(a)pyrene	ND	1200	ug/kg	350
Chrysene	ND	1200	ug/kg	200
Dibenz(a,h)anthracene	ND	1200	ug/kg	180
Benzo(b)fluoranthene	ND	1200	ug/kg	370
Benzo(ghi)perylene	ND	1200	ug/kg	260
Benzo(k)fluoranthene	ND	1200	ug/kg	350
Fluoranthene	ND	1200	ug/kg	310
Fluorene	**2300**	**1200**	**ug/kg**	**280**
Phenanthrene	**1300**	**1200**	**ug/kg**	**140**
yrene	ND	1200	ug/kg	150
Indeno(1,2,3-cd)pyrene	ND	1200	ug/kg	180
Naphthalene	ND	1200	ug/kg	260

SURROGATE	PERCENT RECOVERY	RECOVERY LIMITS
2-Fluorophenol	17 *	(34 - 97)
Phenol-d5	25 *	(39 - 90)
Nitrobenzene-d5	48	(33 - 97)
2-Fluorobiphenyl	26 *	(39 - 91)
2,4,6-Tribromophenol	26 *	(29 - 95)
Terphenyl-d14	24 *	(30 - 102)

NOTE(S):

* Surrogate recovery is outside stated control limits.

Results and reporting limits have been adjusted for dry weight.

URS

Client Sample ID: B-TP-3(5)

GC Semivolatiles

Lot-Sample #...: D1H220253-004 Work Order #...: EJD841AE Matrix.....: SO
Date Sampled...: 08/21/01 10:45 Date Received..: 08/22/01
Prep Date.....: 08/28/01 Analysis Date..: 09/04/01
Prep Batch #...: 1240213 Analysis Time..: 15:40
Dilution Factor: 20

Method.....: SW846 8082

PARAMETER	RESULT	REPORTING LIMIT	UNITS	MDL
Aroclor 1016	ND	1200	ug/kg	370
Aroclor 1221	ND	1200	ug/kg	260
Aroclor 1232	ND	1200	ug/kg	320
Aroclor 1242	ND	1200	ug/kg	310
Aroclor 1248	**4300**	**1200**	**ug/kg**	**230**
Aroclor 1254	ND	1200	ug/kg	230
Aroclor 1260	ND	1200	ug/kg	220

SURROGATE	PERCENT RECOVERY	RECOVERY LIMITS
Decachlorobiphenyl	0.0 DIL,NC	(62 - 145)
Tetrachloro-m-xylene	0.0 DIL,NC	(60 - 130)

OTE(S):

DIL The concentration is estimated or not reported due to dilution or the presence of interfering analytes.

NC The recovery and/or RPD were not calculated.

Results and reporting limits have been adjusted for dry weight.

URS

Client Sample ID: B-TP-3(5)

TOTAL Metals

Lot-Sample #...: D1H220253-004 Matrix.....: SO
Date Sampled...: 08/21/01 10:45 Date Received..: 08/22/01

PARAMETER	RESULT	REPORTING LIMIT	UNITS	METHOD	PREPARATION-ANALYSIS DATE	WORK ORDER #
Prep Batch #...: 1239374						
Silver	ND	18.7	mg/kg	SW846 6010B	08/29-08/30/01	EJD841AM
		Dilution Factor: 10		Analysis Time..: 19:26	MDL.....: 1.3	
Arsenic	ND	18.7	mg/kg	SW846 6010B	08/29-08/30/01	EJD841AH
		Dilution Factor: 10		Analysis Time..: 19:26	MDL.....: 5.4	
Barium	**23.1**	**18.7**	**mg/kg**	**SW846 6010B**	**08/29-08/30/01**	**EJD841AF**
		Dilution Factor: 10		Analysis Time..: 19:26	MDL.....: 0.94	
Cadmium	ND	9.4	mg/kg	SW846 6010B	08/29-08/30/01	EJD841AJ
		Dilution Factor: 10		Analysis Time..: 19:26	MDL.....: 0.62	
Chromium	**2470**	**18.7**	**mg/kg**	**SW846 6010B**	**08/29-08/30/01**	**EJD841AG**
		Dilution Factor: 10		Analysis Time..: 19:26	MDL.....: 4.3	
Lead	**11.2 B**	**15.0**	**mg/kg**	**SW846 6010B**	**08/29-08/30/01**	**EJD841AK**
		Dilution Factor: 10		Analysis Time..: 19:26	MDL.....: 3.9	
Selenium	ND	24.4	mg/kg	SW846 6010B	08/29-08/30/01	EJD841AL
		Dilution Factor: 10		Analysis Time..: 19:26	MDL.....: 7.3	
Prep Batch #...: 1241416						
Mercury	**0.087**	**0.062**	**mg/kg**	**SW846 7471A**	**09/05/01**	**EJD841AN**
		Dilution Factor: 1		Analysis Time..: 12:14	MDL.....: 0.0049	

NOTE(S):

Results and reporting limits have been adjusted for dry weight.

B Estimated result. Result is less than RL.

URS

Client Sample ID: B-TP-3(5)

General Chemistry

Lot-Sample #...: D1H220253-004 Work Order #...: EJD84 Matrix.....: SO
Date Sampled...: 08/21/01 10:45 Date Received..: 08/22/01

PARAMETER	RESULT	RL	UNITS	METHOD	PREPARATION-ANALYSIS DATE	PREP BATCH #
Percent Moisture	46.6	0.10	%	MCAWW 160.3 MOD	08/30/01	1243217

Dilution Factor: 1 Analysis Time..: 16:00 MDL.....:

URS

Client Sample ID: TRIP BLANK

GC/MS Volatiles

Lot-Sample #...: D1H220253-005 Work Order #...: EJD861AA Matrix.....: WQ
Date Sampled...: 08/21/01 Date Received..: 08/22/01
Prep Date.....: 09/04/01 Analysis Date..: 09/04/01
Prep Batch #...: 1249357 Analysis Time..: 21:43
Dilution Factor: 1

Method.....: SW846 8260B

PARAMETER	RESULT	REPORTING LIMIT	UNITS	MDL
Acrolein	ND	20	ug/L	4.7
Acrylonitrile	ND	20	ug/L	2.4
Acetone	ND	10	ug/L	1.9
Benzene	ND	1.0	ug/L	0.21
Bromodichloromethane	ND	1.0	ug/L	0.22
Bromoform	ND	1.0	ug/L	0.32
Bromomethane	ND	2.0	ug/L	0.30
2-Butanone (MEK)	ND	5.0	ug/L	0.93
Carbon disulfide	ND	1.0	ug/L	0.19
Carbon tetrachloride	ND	1.0	ug/L	0.19
Chlorobenzene	ND	1.0	ug/L	0.30
Chloroethane	ND	2.0	ug/L	0.25
2-Chloroethyl vinyl ether	ND	2.0	ug/L	0.13
Chloroform	ND	1.0	ug/L	0.23
Chloromethane	ND	2.0	ug/L	0.30
Dibromochloromethane	ND	1.0	ug/L	0.38
Dibromomethane	ND	1.0	ug/L	0.44
1,2-Dibromoethane (EDB)	ND	1.0	ug/L	0.36
1,2-Dichlorobenzene	ND	1.0	ug/L	0.24
1,3-Dichlorobenzene	ND	1.0	ug/L	0.26
1,4-Dichlorobenzene	ND	1.0	ug/L	0.24
Dichlorodifluoromethane	ND	2.0	ug/L	0.23
1,1-Dichloroethane	ND	1.0	ug/L	0.17
1,2-Dichloroethane	ND	1.0	ug/L	0.28
1,1-Dichloroethene	ND	1.0	ug/L	0.20
cis-1,2-Dichloroethene	ND	1.0	ug/L	0.26
trans-1,2-Dichloroethene	ND	0.50	ug/L	0.27
1,2-Dichloroethene (total)	ND	1.0	ug/L	0.53
1,2-Dichloropropane	ND	1.0	ug/L	0.21
cis-1,3-Dichloropropene	ND	1.0	ug/L	0.28
trans-1,3-Dichloropropene	ND	1.0	ug/L	0.42
trans-1,4-Dichloro-2-butene	ND	1.0	ug/L	0.60
1,4-Dioxane	ND	200	ug/L	17
Ethanol	ND	200	ug/L	72
Ethylbenzene	ND	1.0	ug/L	0.28
Ethyl methacrylate	ND	1.0	ug/L	0.25

(Continued on next page)

URS

Client Sample ID: TRIP BLANK

GC/MS Volatiles

Lot-Sample #...: D1H220253-005 Work Order #...: EJD861AA Matrix.....: WQ

PARAMETER	RESULT	REPORTING LIMIT	UNITS	MDL
Hexane	ND	1.0	ug/L	0.25
2-Hexanone	ND	5.0	ug/L	0.70
Iodomethane	ND	1.0	ug/L	0.23
Methylene chloride	ND	1.0	ug/L	0.89
4-Methyl-2-pentanone	ND	5.0	ug/L	0.79
Methyl tert-butyl ether	ND	5.0	ug/L	0.21
Styrene	ND	1.0	ug/L	0.27
1,1,2,2-Tetrachloroethane	ND	1.0	ug/L	0.31
tert-Butyl alcohol	ND	50	ug/L	6.3
Tetrachloroethene	ND	1.0	ug/L	0.36
Tetrahydrofuran	ND	5.0	ug/L	0.32
Toluene	ND	1.0	ug/L	0.29
1,1,1-Trichloroethane	ND	1.0	ug/L	0.26
1,1,2-Trichloroethane	ND	1.0	ug/L	0.39
Trichloroethene	ND	1.0	ug/L	0.22
Trichlorofluoromethane	ND	2.0	ug/L	0.28
1,2,3-Trichloropropane	ND	1.0	ug/L	0.29
Trichlorotrifluoroethane	ND	1.0	ug/L	0.21
Vinyl acetate	ND	2.0	ug/L	0.31
Vinyl chloride	ND	1.0	ug/L	0.21
Xylenes (total)	ND	2.0	ug/L	0.95
Dichlorofluoromethane	ND	2.0	ug/L	0.12
Ethyl ether	ND	2.0	ug/L	0.24
Acetonitrile	ND	20	ug/L	2.6
Chloroprene	ND	1.0	ug/L	0.22
Isopropyl ether	ND	10	ug/L	0.91
Propionitrile	ND	5.0	ug/L	2.2
Ethyl acetate	ND	5.0	ug/L	0.25
Methacrylonitrile	ND	10	ug/L	1.6
Isobutyl alcohol	ND	50	ug/L	11
Methyl methacrylate	ND	1.0	ug/L	0.30
n-Butanol	ND	50	ug/L	7.7
2-Nitropropane	ND	2.0	ug/L	0.62
1,1,1,2-Tetrachloroethane	ND	1.0	ug/L	0.22
Cyclohexanone	ND	20	ug/L	12
Isopropylbenzene	ND	1.0	ug/L	0.31
1,2-Dibromo-3-chloropropane (DBCP)	ND	2.0	ug/L	0.25

SURROGATE	PERCENT RECOVERY	RECOVERY LIMITS
Dibromofluoromethane	94	(80 - 120)
1,2-Dichloroethane-d4	93	(72 - 127)
4-Bromofluorobenzene	92	(79 - 119)
Toluene-d8	98	(79 - 119)

QC DATA ASSOCIATION SUMMARY

D1H220253

Sample Preparation and Analysis Control Numbers

SAMPLE#	MATRIX	ANALYTICAL METHOD	LEACH BATCH #	PREP BATCH #	MS RUN#
001	SD	SW846 7471A		1241416	1241216
	SD	SW846 8082		1240213	1240079
	SD	SW846 8260B		1243335	1243176
	SD	SW846 8270C		1235171	1235055
	SD	SW846 6010B		1239374	1239201
	SD	MCAWW 160.3 MOD		1243217	1243090
002	SO	SW846 7471A		1241416	1241216
	SO	SW846 8082		1240213	1240079
	SO	SW846 8260B		1243446	
	SO	SW846 8270C		1235171	1235055
	SO	SW846 6010B		1239374	1239201
	SO	MCAWW 160.3 MOD		1243217	1243090
003	SO	SW846 7471A		1241416	1241216
	SO	SW846 8082		1240213	1240079
	SO	SW846 8082		1248200	1248089
	SO	SW846 8260B		1239384	1239208
	SO	SW846 8270C		1235171	1235055
	SO	SW846 6010B		1239374	1239201
	SO	MCAWW 160.3 MOD		1243217	1243090
004	SO	SW846 7471A		1241416	1241216
	SO	SW846 8082		1240213	1240079
	SO	SW846 8260B		1243446	
	SO	SW846 8270C		1235171	1235055
	SO	SW846 6010B		1239374	1239201
	SO	MCAWW 160.3 MOD		1243217	1243090
005	WQ	SW846 8260B		1249357	1249200

METHOD BLANK REPORT

GC/MS Volatiles

Client Lot #...: D1H220253
MB Lot-Sample #: D1H270000-384

Work Order #...: EJL531AA

Matrix.....: SOLID

Prep Date.....: 08/24/01

Analysis Time..: 12:13

Analysis Date..: 08/24/01
Prep Batch #...: 1239384
Dilution Factor: 1

PARAMETER	RESULT	REPORTING LIMIT	UNITS	METHOD
Benzene	ND	5.0	ug/kg	SW846 8260B
Ethylbenzene	ND	5.0	ug/kg	SW846 8260B
Toluene	ND	5.0	ug/kg	SW846 8260B
Xylenes (total)	ND	5.0	ug/kg	SW846 8260B
Acetone	ND	20	ug/kg	SW846 8260B
Bromodichloromethane	ND	5.0	ug/kg	SW846 8260B
Bromoform	ND	5.0	ug/kg	SW846 8260B
Bromomethane	ND	10	ug/kg	SW846 8260B
Carbon disulfide	ND	5.0	ug/kg	SW846 8260B
Carbon tetrachloride	ND	5.0	ug/kg	SW846 8260B
Chlorobenzene	ND	5.0	ug/kg	SW846 8260B
Dibromochloromethane	ND	5.0	ug/kg	SW846 8260B
Chloroethane	ND	10	ug/kg	SW846 8260B
Chloroform	ND	5.0	ug/kg	SW846 8260B
Chloromethane	ND	10	ug/kg	SW846 8260B
1,1-Dichloroethane	ND	5.0	ug/kg	SW846 8260B
1,2-Dichloroethane	ND	5.0	ug/kg	SW846 8260B
1,1-Dichloroethene	ND	5.0	ug/kg	SW846 8260B
1,2-Dichloroethene (total)	ND	5.0	ug/kg	SW846 8260B
1,2-Dichloropropane	ND	5.0	ug/kg	SW846 8260B
cis-1,3-Dichloropropene	ND	5.0	ug/kg	SW846 8260B
trans-1,3-Dichloropropene	ND	5.0	ug/kg	SW846 8260B
2-Hexanone	ND	20	ug/kg	SW846 8260B
Methylene chloride	ND	5.0	ug/kg	SW846 8260B
4-Methyl-2-pentanone	ND	20	ug/kg	SW846 8260B
Styrene	ND	5.0	ug/kg	SW846 8260B
1,1,2,2-Tetrachloroethane	ND	5.0	ug/kg	SW846 8260B
Tetrachloroethene	ND	5.0	ug/kg	SW846 8260B
1,1,1-Trichloroethane	ND	5.0	ug/kg	SW846 8260B
1,1,2-Trichloroethane	ND	5.0	ug/kg	SW846 8260B
Trichloroethene	ND	5.0	ug/kg	SW846 8260B
Vinyl chloride	ND	10	ug/kg	SW846 8260B
2-Butanone (MEK)	ND	20	ug/kg	SW846 8260B
Cyclohexanone	ND	250	ug/kg	SW846 8260B
1,2-Dichlorobenzene	ND	5.0	ug/kg	SW846 8260B
1,3-Dichlorobenzene	ND	5.0	ug/kg	SW846 8260B
1,4-Dichlorobenzene	ND	5.0	ug/kg	SW846 8260B
Dichlorodifluoromethane	ND	10	ug/kg	SW846 8260B
cis-1,2-Dichloroethene	ND	2.5	ug/kg	SW846 8260B
trans-1,2-Dichloroethene	ND	2.5	ug/kg	SW846 8260B

(Continued on next page)

METHOD BLANK REPORT

GC/MS Volatiles

Client Lot #...: D1H220253 Work Order #...: EJL531AA Matrix.....: SOLID

PARAMETER	RESULT	REPORTING LIMIT	UNITS	METHOD
Ethyl acetate	ND	10	ug/kg	SW846 8260B
Ethyl ether	ND	10	ug/kg	SW846 8260B
Trichlorofluoromethane	ND	10	ug/kg	SW846 8260B
Isobutyl alcohol	ND	200	ug/kg	SW846 8260B
2-Nitropropane	ND	10	ug/kg	SW846 8260B
Trichlorotrifluoroethane	ND	20	ug/kg	SW846 8260B
n-Butanol	ND	200	ug/kg	SW846 8260B
Hexane	ND	5.0	ug/kg	SW846 8260B
Acetonitrile	ND	100	ug/kg	SW846 8260B
Acrylonitrile	ND	100	ug/kg	SW846 8260B
Chloroprene	ND	5.0	ug/kg	SW846 8260B
Dibromomethane	ND	5.0	ug/kg	SW846 8260B
1,4-Dioxane	ND	500	ug/kg	SW846 8260B
Ethyl methacrylate	ND	5.0	ug/kg	SW846 8260B
Iodomethane	ND	5.0	ug/kg	SW846 8260B
Methacrylonitrile	ND	50	ug/kg	SW846 8260B
Methyl methacrylate	ND	5.0	ug/kg	SW846 8260B
ropionitrile	ND	20	ug/kg	SW846 8260B
,1,1,2-Tetrachloroethane	ND	5.0	ug/kg	SW846 8260B
1,2,3-Trichloropropane	ND	5.0	ug/kg	SW846 8260B
1,2-Dibromo-3-chloropropane (DBCP)	ND	10	ug/kg	SW846 8260B
1,2-Dibromoethane (EDB)	ND	5.0	ug/kg	SW846 8260B
Acrolein	ND	100	ug/kg	SW846 8260B
trans-1,4-Dichloro-2-butene	ND	5.0	ug/kg	SW846 8260B
Dichlorofluoromethane	ND	10	ug/kg	SW846 8260B
Ethanol	ND	500	ug/kg	SW846 8260B
Isopropylbenzene	ND	5.0	ug/kg	SW846 8260B
Isopropyl ether	ND	50	ug/kg	SW846 8260B
tert-Butyl alcohol	ND	200	ug/kg	SW846 8260B
Tetrahydrofuran	ND	20	ug/kg	SW846 8260B
Vinyl acetate	ND	10	ug/kg	SW846 8260B
Methyl tert-butyl ether	ND	5.0	ug/kg	SW846 8260B

SURROGATE	PERCENT RECOVERY	RECOVERY LIMITS
Dibromofluoromethane	103	(80 - 120)
1,2-Dichloroethane-d4	101	(79 - 125)
4-Bromofluorobenzene	94	(71 - 132)
Toluene-d8	83	(77 - 117)

NOTE(S):

Calculations are performed before rounding to avoid round-off errors in calculated results.

METHOD BLANK REPORT

GC/MS Volatiles

Client Lot #...: D1H220253 Work Order #...: EJL531AE Matrix.....: SOLID
MB Lot-Sample #: D1H270000-384

Prep Date.....: 08/22/01 Analysis Time..: 12:41

Analysis Date..: 08/24/01 Prep Batch #...: 1239384
Dilution Factor: 1

PARAMETER	RESULT	REPORTING LIMIT	UNITS	METHOD
Benzene	ND	5.0	ug/kg	SW846 8260B
Ethylbenzene	ND	5.0	ug/kg	SW846 8260B
Toluene	ND	5.0	ug/kg	SW846 8260B
Xylenes (total)	ND	5.0	ug/kg	SW846 8260B
Acetone	ND	20	ug/kg	SW846 8260B
Bromodichloromethane	ND	5.0	ug/kg	SW846 8260B
Bromoform	ND	5.0	ug/kg	SW846 8260B
Bromomethane	ND	10	ug/kg	SW846 8260B
Carbon disulfide	ND	5.0	ug/kg	SW846 8260B
Carbon tetrachloride	ND	5.0	ug/kg	SW846 8260B
Chlorobenzene	ND	5.0	ug/kg	SW846 8260B
Dibromochloromethane	ND	5.0	ug/kg	SW846 8260B
Chloroethane	ND	10	ug/kg	SW846 8260B
Chloroform	ND	5.0	ug/kg	SW846 8260B
loromethane	ND	10	ug/kg	SW846 8260B
1,1-Dichloroethane	ND	5.0	ug/kg	SW846 8260B
1,2-Dichloroethane	ND	5.0	ug/kg	SW846 8260B
1,1-Dichloroethene	ND	5.0	ug/kg	SW846 8260B
1,2-Dichloroethene (total)	ND	5.0	ug/kg	SW846 8260B
1,2-Dichloropropane	ND	5.0	ug/kg	SW846 8260B
cis-1,3-Dichloropropene	ND	5.0	ug/kg	SW846 8260B
trans-1,3-Dichloropropene	ND	5.0	ug/kg	SW846 8260B
2-Hexanone	ND	20	ug/kg	SW846 8260B
Methylene chloride	**1.3 J**	**5.0**	**ug/kg**	**SW846 8260B**
4-Methyl-2-pentanone	ND	20	ug/kg	SW846 8260B
Styrene	ND	5.0	ug/kg	SW846 8260B
1,1,2,2-Tetrachloroethane	ND	5.0	ug/kg	SW846 8260B
Tetrachloroethene	ND	5.0	ug/kg	SW846 8260B
1,1,1-Trichloroethane	ND	5.0	ug/kg	SW846 8260B
1,1,2-Trichloroethane	ND	5.0	ug/kg	SW846 8260B
Trichloroethene	ND	5.0	ug/kg	SW846 8260B
Vinyl chloride	ND	10	ug/kg	SW846 8260B
2-Butanone (MEK)	ND	20	ug/kg	SW846 8260B
Cyclohexanone	ND	250	ug/kg	SW846 8260B
1,2-Dichlorobenzene	ND	5.0	ug/kg	SW846 8260B
1,3-Dichlorobenzene	ND	5.0	ug/kg	SW846 8260B
1,4-Dichlorobenzene	ND	5.0	ug/kg	SW846 8260B
Dichlorodifluoromethane	ND	10	ug/kg	SW846 8260B
cis-1,2-Dichloroethene	ND	2.5	ug/kg	SW846 8260B
Ethyl ether	ND	10	ug/kg	SW846 8260B

(Continued on next page)

METHOD BLANK REPORT

GC/MS Volatiles

Client Lot #...: D1H220253 Work Order #...: EJL531AE Matrix.....: SOLID

PARAMETER	RESULT	REPORTING LIMIT	UNITS	METHOD
Trichlorofluoromethane	ND	10	ug/kg	SW846 8260B
Isobutyl alcohol	ND	200	ug/kg	SW846 8260B
trans-1,2-Dichloroethene	ND	2.5	ug/kg	SW846 8260B
Ethyl acetate	ND	10	ug/kg	SW846 8260B
2-Nitropropane	ND	10	ug/kg	SW846 8260B
Trichlorotrifluoroethane	ND	20	ug/kg	SW846 8260B
n-Butanol	ND	200	ug/kg	SW846 8260B
Hexane	ND	5.0	ug/kg	SW846 8260B
Acetonitrile	ND	100	ug/kg	SW846 8260B
Acrylonitrile	ND	100	ug/kg	SW846 8260B
Chloroprene	ND	5.0	ug/kg	SW846 8260B
Dibromomethane	ND	5.0	ug/kg	SW846 8260B
1,4-Dioxane	ND	500	ug/kg	SW846 8260B
Ethyl methacrylate	ND	5.0	ug/kg	SW846 8260B
Iodomethane	ND	5.0	ug/kg	SW846 8260B
Methacrylonitrile	ND	50	ug/kg	SW846 8260B
Methyl methacrylate	ND	5.0	ug/kg	SW846 8260B
Propionitrile	ND	20	ug/kg	SW846 8260B
1,1,2-Tetrachloroethane	ND	5.0	ug/kg	SW846 8260B
1,2,3-Trichloropropane	ND	5.0	ug/kg	SW846 8260B
1,2-Dibromo-3-chloropropane (DBCP)	ND	10	ug/kg	SW846 8260B
1,2-Dibromoethane (EDB)	ND	5.0	ug/kg	SW846 8260B
Acrolein	ND	100	ug/kg	SW846 8260B
trans-1,4-Dichloro-2-butene	ND	5.0	ug/kg	SW846 8260B
Dichlorofluoromethane	ND	10	ug/kg	SW846 8260B
Ethanol	ND	500	ug/kg	SW846 8260B
Isopropylbenzene	ND	5.0	ug/kg	SW846 8260B
Isopropyl ether	ND	50	ug/kg	SW846 8260B
tert-Butyl alcohol	ND	200	ug/kg	SW846 8260B
Tetrahydrofuran	ND	20	ug/kg	SW846 8260B
Vinyl acetate	ND	10	ug/kg	SW846 8260B
Methyl tert-butyl ether	ND	5.0	ug/kg	SW846 8260B

SURROGATE	PERCENT RECOVERY	RECOVERY LIMITS
Dibromofluoromethane	108	(80 - 120)
1,2-Dichloroethane-d4	109	(79 - 125)
4-Bromofluorobenzene	94	(71 - 132)
Toluene-d8	89	(77 - 117)

NOTE(S):

Calculations are performed before rounding to avoid round-off errors in calculated results.

(Continued on next page)

METHOD BLANK REPORT

GC/MS Volatiles

Client Lot #...: D1H220253 Work Order #...: EJL531AE Matrix.....: SOLID

NOTE(S):

J Estimated result. Result is less than RL.

This method blank is associated with D1H220253-03.

METHOD BLANK REPORT

GC/MS Volatiles

Client Lot #...: D1H220253
MB Lot-Sample #: D1H310000-335

Work Order #...: EJXGN1AA

Matrix.....: SOLID

Prep Date.....: 08/30/01

Analysis Time..: 20:19

Analysis Date..: 08/30/01
Prep Batch #...: 1243335

Dilution Factor: 1

PARAMETER	RESULT	REPORTING LIMIT	UNITS	METHOD
Acetone	ND	1000	ug/kg	SW846 8260B
Benzene	ND	250	ug/kg	SW846 8260B
Bromodichloromethane	ND	250	ug/kg	SW846 8260B
Bromoform	ND	250	ug/kg	SW846 8260B
Bromomethane	ND	500	ug/kg	SW846 8260B
Carbon disulfide	ND	250	ug/kg	SW846 8260B
Carbon tetrachloride	ND	250	ug/kg	SW846 8260B
Chlorobenzene	ND	250	ug/kg	SW846 8260B
Dibromochloromethane	ND	250	ug/kg	SW846 8260B
Chloroethane	ND	500	ug/kg	SW846 8260B
Chloroform	ND	500	ug/kg	SW846 8260B
Chloromethane	ND	500	ug/kg	SW846 8260B
Dibromomethane	ND	250	ug/kg	SW846 8260B
2-Dichlorobenzene	ND	250	ug/kg	SW846 8260B
,3-Dichlorobenzene	ND	250	ug/kg	SW846 8260B
1,4-Dichlorobenzene	ND	250	ug/kg	SW846 8260B
1,1-Dichloroethane	ND	250	ug/kg	SW846 8260B
1,2-Dichloroethane	ND	250	ug/kg	SW846 8260B
1,1-Dichloroethene	ND	250	ug/kg	SW846 8260B
cis-1,2-Dichloroethene	ND	120	ug/kg	SW846 8260B
trans-1,2-Dichloroethene	ND	120	ug/kg	SW846 8260B
1,2-Dichloroethene (total)	ND	250	ug/kg	SW846 8260B
1,2-Dichloropropane	ND	250	ug/kg	SW846 8260B
cis-1,3-Dichloropropene	ND	250	ug/kg	SW846 8260B
trans-1,3-Dichloropropene	ND	250	ug/kg	SW846 8260B
Ethylbenzene	ND	250	ug/kg	SW846 8260B
Trichlorofluoromethane	ND	500	ug/kg	SW846 8260B
2-Hexanone	ND	1000	ug/kg	SW846 8260B
Isopropylbenzene	ND	250	ug/kg	SW846 8260B
Methylene chloride	ND	250	ug/kg	SW846 8260B
4-Methyl-2-pentanone	ND	1000	ug/kg	SW846 8260B
Styrene	ND	250	ug/kg	SW846 8260B
1,1,1,2-Tetrachloroethane	ND	250	ug/kg	SW846 8260B
1,1,2,2-Tetrachloroethane	ND	250	ug/kg	SW846 8260B
Tetrachloroethene	ND	250	ug/kg	SW846 8260B
Toluene	ND	250	ug/kg	SW846 8260B
1,1,1-Trichloroethane	ND	250	ug/kg	SW846 8260B
1,1,2-Trichloroethane	ND	250	ug/kg	SW846 8260B
Trichloroethene	ND	250	ug/kg	SW846 8260B
1,2,3-Trichloropropane	ND	250	ug/kg	SW846 8260B

(Continued on next page)

METHOD BLANK REPORT

GC/MS Volatiles

Client Lot #...: D1H220253 Work Order #...: EJXGN1AA Matrix.....: SOLID

PARAMETER	RESULT	REPORTING LIMIT	UNITS	METHOD
Vinyl acetate	ND	500	ug/kg	SW846 8260B
Vinyl chloride	ND	500	ug/kg	SW846 8260B
Xylenes (total)	ND	250	ug/kg	SW846 8260B
Methyl tert-butyl ether	ND	1000	ug/kg	SW846 8260B
1,2-Dibromo-3-chloropropane (DBCP)	ND	500	ug/kg	SW846 8260B
1,2-Dibromoethane (EDB)	ND	250	ug/kg	SW846 8260B
2-Butanone (MEK)	ND	1000	ug/kg	SW846 8260B
Acetonitrile	ND	5000	ug/kg	SW846 8260B
Acrolein	ND	5000	ug/kg	SW846 8260B
Acrylonitrile	ND	5000	ug/kg	SW846 8260B
Chloroprene	ND	250	ug/kg	SW846 8260B
Allyl chloride	ND	500	ug/kg	SW846 8260B
Cyclohexanone	ND	12000	ug/kg	SW846 8260B
trans-1,4-Dichloro-2-butene	ND	250	ug/kg	SW846 8260B
Dichlorodifluoromethane	ND	500	ug/kg	SW846 8260B
Dichlorofluoromethane	ND	500	ug/kg	SW846 8260B
,4-Dioxane	ND	25000	ug/kg	SW846 8260B
Ethanol	ND	25000	ug/kg	SW846 8260B
Ethyl acetate	ND	500	ug/kg	SW846 8260B
Ethyl ether	ND	500	ug/kg	SW846 8260B
Ethyl methacrylate	ND	250	ug/kg	SW846 8260B
Iodomethane	ND	250	ug/kg	SW846 8260B
Isobutyl alcohol	ND	10000	ug/kg	SW846 8260B
Isopropyl ether	ND	2500	ug/kg	SW846 8260B
Methacrylonitrile	ND	250	ug/kg	SW846 8260B
tert-Butyl alcohol	ND	10000	ug/kg	SW846 8260B
Methyl methacrylate	ND	250	ug/kg	SW846 8260B
2-Nitropropane	ND	500	ug/kg	SW846 8260B
Propionitrile	ND	500	ug/kg	SW846 8260B
Tetrahydrofuran	ND	1000	ug/kg	SW846 8260B
n-Butanol	ND	10000	ug/kg	SW846 8260B
Trichlorotrifluoroethane	ND	1000	ug/kg	SW846 8260B
Hexane	ND	250	ug/kg	SW846 8260B

SURROGATE	PERCENT RECOVERY	RECOVERY LIMITS
Dibromofluoromethane	96	(69 - 121)
1,2-Dichloroethane-d4	74	(60 - 117)
4-Bromofluorobenzene	82	(48 - 129)
Toluene-d8	83	(57 - 138)

NOTE(S):

Calculations are performed before rounding to avoid round-off errors in calculated results.

METHOD BLANK REPORT

GC/MS Volatiles

Client Lot #...: D1H220253 Work Order #...: EJX501AA Matrix.....: SOLID
MB Lot-Sample #: D1H310000-446
Prep Date.....: 08/22/01 Analysis Time..: 21:37
Analysis Date..: 08/30/01 Prep Batch #...: 1243446
Dilution Factor: 1

PARAMETER	RESULT	REPORTING LIMIT	UNITS	METHOD
Chloroethane	ND	500	ug/kg	SW846 8260B
Chloroform	ND	250	ug/kg	SW846 8260B
Chloromethane	ND	500	ug/kg	SW846 8260B
Cyclohexanone	ND	12000	ug/kg	SW846 8260B
Acetone	ND	1000	ug/kg	SW846 8260B
Acetonitrile	ND	5000	ug/kg	SW846 8260B
Acrolein	ND	5000	ug/kg	SW846 8260B
Acrylonitrile	ND	5000	ug/kg	SW846 8260B
Benzene	ND	250	ug/kg	SW846 8260B
Bromodichloromethane	ND	250	ug/kg	SW846 8260B
Bromoform	ND	250	ug/kg	SW846 8260B
Bromomethane	ND	500	ug/kg	SW846 8260B
Carbon disulfide	ND	250	ug/kg	SW846 8260B
Carbon tetrachloride	ND	250	ug/kg	SW846 8260B
lorobenzene	ND	250	ug/kg	SW846 8260B
Chloroprene	ND	250	ug/kg	SW846 8260B
Dibromochloromethane	ND	250	ug/kg	SW846 8260B
Dibromomethane	ND	250	ug/kg	SW846 8260B
1,1,2-Trichloroethane	ND	250	ug/kg	SW846 8260B
Trichloroethene	ND	250	ug/kg	SW846 8260B
1,2,3-Trichloropropane	ND	250	ug/kg	SW846 8260B
Vinyl acetate	ND	500	ug/kg	SW846 8260B
Vinyl chloride	ND	500	ug/kg	SW846 8260B
Xylenes (total)	ND	250	ug/kg	SW846 8260B
n-Butanol	ND	10000	ug/kg	SW846 8260B
Trichlorotrifluoroethane	ND	1000	ug/kg	SW846 8260B
Methyl tert-butyl ether	ND	250	ug/kg	SW846 8260B
1,2-Dibromo-3-chloropropane (DBCP)	ND	500	ug/kg	SW846 8260B
1,2-Dibromoethane (EDB)	ND	250	ug/kg	SW846 8260B
2-Butanone (MEK)	ND	1000	ug/kg	SW846 8260B
Hexane	ND	250	ug/kg	SW846 8260B
1,2-Dichlorobenzene	ND	250	ug/kg	SW846 8260B
1,3-Dichlorobenzene	ND	250	ug/kg	SW846 8260B
1,4-Dichlorobenzene	ND	250	ug/kg	SW846 8260B
trans-1,4-Dichloro-2-butene	ND	250	ug/kg	SW846 8260B
Dichlorodifluoromethane	ND	500	ug/kg	SW846 8260B
1,1-Dichloroethane	ND	250	ug/kg	SW846 8260B
1,2-Dichloroethane	ND	250	ug/kg	SW846 8260B
1,1-Dichloroethene	ND	250	ug/kg	SW846 8260B

(Continued on next page)

METHOD BLANK REPORT

GC/MS Volatiles

Client Lot #...: D1H220253 Work Order #...: EJX501AA Matrix.....: SOLID

PARAMETER	RESULT	REPORTING LIMIT	UNITS	METHOD
cis-1,2-Dichloroethene	ND	120	ug/kg	SW846 8260B
trans-1,2-Dichloroethene	ND	120	ug/kg	SW846 8260B
1,2-Dichloroethene (total)	ND	250	ug/kg	SW846 8260B
Dichlorofluoromethane	ND	500	ug/kg	SW846 8260B
1,2-Dichloropropane	ND	250	ug/kg	SW846 8260B
cis-1,3-Dichloropropene	ND	250	ug/kg	SW846 8260B
trans-1,3-Dichloropropene	ND	250	ug/kg	SW846 8260B
1,4-Dioxane	ND	25000	ug/kg	SW846 8260B
Ethylbenzene	ND	250	ug/kg	SW846 8260B
Ethyl ether	ND	500	ug/kg	SW846 8260B
Ethyl methacrylate	ND	250	ug/kg	SW846 8260B
Ethanol	ND	25000	ug/kg	SW846 8260B
Ethyl acetate	ND	500	ug/kg	SW846 8260B
Trichlorofluoromethane	ND	500	ug/kg	SW846 8260B
2-Hexanone	ND	1000	ug/kg	SW846 8260B
Iodomethane	ND	250	ug/kg	SW846 8260B
Isobutyl alcohol	ND	10000	ug/kg	SW846 8260B
Isopropylbenzene	ND	250	ug/kg	SW846 8260B
Isopropyl ether	ND	2500	ug/kg	SW846 8260B
Methacrylonitrile	ND	2500	ug/kg	SW846 8260B
tert-Butyl alcohol	ND	10000	ug/kg	SW846 8260B
Methylene chloride	ND	250	ug/kg	SW846 8260B
Methyl methacrylate	ND	250	ug/kg	SW846 8260B
4-Methyl-2-pentanone	ND	1000	ug/kg	SW846 8260B
2-Nitropropane	ND	500	ug/kg	SW846 8260B
Propionitrile	ND	1000	ug/kg	SW846 8260B
Styrene	ND	250	ug/kg	SW846 8260B
1,1,1,2-Tetrachloroethane	ND	250	ug/kg	SW846 8260B
1,1,2,2-Tetrachloroethane	ND	250	ug/kg	SW846 8260B
Tetrachloroethene	ND	250	ug/kg	SW846 8260B
Tetrahydrofuran	ND	1000	ug/kg	SW846 8260B
Toluene	ND	250	ug/kg	SW846 8260B
1,1,1-Trichloroethane	ND	250	ug/kg	SW846 8260B

SURROGATE	PERCENT RECOVERY	RECOVERY LIMITS
Dibromofluoromethane	94	(69 - 121)
1,2-Dichloroethane-d4	72	(60 - 117)
4-Bromofluorobenzene	91	(48 - 129)
Toluene-d8	80	(57 - 138)

NOTE(S):

Calculations are performed before rounding to avoid round-off errors in calculated results.

METHOD BLANK REPORT

GC/MS Volatiles

Client Lot #...: D1H220253 Work Order #...: EJ47N1AA Matrix.....: WATER
MB Lot-Sample #: D1I060000-357

Prep Date.....: 09/04/01 Analysis Time..: 16:27

Analysis Date..: 09/04/01 Prep Batch #...: 1249357
Dilution Factor: 1

PARAMETER	RESULT	REPORTING LIMIT	UNITS	METHOD
Acetone	ND	10	ug/L	SW846 8260B
Acrylonitrile	ND	20	ug/L	SW846 8260B
Benzene	ND	1.0	ug/L	SW846 8260B
Bromodichloromethane	ND	1.0	ug/L	SW846 8260B
Bromoform	ND	1.0	ug/L	SW846 8260B
Bromomethane	ND	2.0	ug/L	SW846 8260B
Carbon disulfide	ND	1.0	ug/L	SW846 8260B
Carbon tetrachloride	ND	1.0	ug/L	SW846 8260B
Chlorobenzene	ND	1.0	ug/L	SW846 8260B
Dibromochloromethane	ND	1.0	ug/L	SW846 8260B
Chloroethane	ND	2.0	ug/L	SW846 8260B
Chloroform	ND	1.0	ug/L	SW846 8260B
Chloromethane	ND	2.0	ug/L	SW846 8260B
Dibromomethane	ND	1.0	ug/L	SW846 8260B
,2-Dichlorobenzene	ND	1.0	ug/L	SW846 8260B
1,4-Dichlorobenzene	ND	1.0	ug/L	SW846 8260B
trans-1,4-Dichloro-2-butene	ND	1.0	ug/L	SW846 8260B
1,1-Dichloroethane	ND	1.0	ug/L	SW846 8260B
1,2-Dichloroethane	ND	1.0	ug/L	SW846 8260B
1,1-Dichloroethene	ND	1.0	ug/L	SW846 8260B
cis-1,2-Dichloroethene	ND	1.0	ug/L	SW846 8260B
trans-1,2-Dichloroethene	ND	0.50	ug/L	SW846 8260B
1,2-Dichloropropane	ND	1.0	ug/L	SW846 8260B
cis-1,3-Dichloropropene	ND	1.0	ug/L	SW846 8260B
trans-1,3-Dichloropropene	ND	1.0	ug/L	SW846 8260B
Ethylbenzene	ND	1.0	ug/L	SW846 8260B
Trichlorofluoromethane	ND	2.0	ug/L	SW846 8260B
2-Hexanone	ND	5.0	ug/L	SW846 8260B
Iodomethane	ND	1.0	ug/L	SW846 8260B
Methylene chloride	ND	1.0	ug/L	SW846 8260B
4-Methyl-2-pentanone	ND	5.0	ug/L	SW846 8260B
Styrene	ND	1.0	ug/L	SW846 8260B
1,1,1,2-Tetrachloroethane	ND	1.0	ug/L	SW846 8260B
1,1,2,2-Tetrachloroethane	ND	1.0	ug/L	SW846 8260B
Tetrachloroethene	ND	1.0	ug/L	SW846 8260B
Toluene	ND	1.0	ug/L	SW846 8260B
1,1,1-Trichloroethane	ND	1.0	ug/L	SW846 8260B
1,1,2-Trichloroethane	ND	1.0	ug/L	SW846 8260B
Trichloroethene	ND	1.0	ug/L	SW846 8260B
1,2,3-Trichloropropane	ND	1.0	ug/L	SW846 8260B

(Continued on next page)

METHOD BLANK REPORT

GC/MS Volatiles

Client Lot #...: D1H220253 Work Order #...: EJ47N1AA Matrix.....: WATER

PARAMETER	RESULT	REPORTING LIMIT	UNITS	METHOD
Vinyl acetate	ND	2.0	ug/L	SW846 8260B
Vinyl chloride	ND	1.0	ug/L	SW846 8260B
Xylenes (total)	ND	2.0	ug/L	SW846 8260B
1,2-Dibromo-3-chloropropane (DBCP)	ND	2.0	ug/L	SW846 8260B
1,2-Dibromoethane (EDB)	ND	1.0	ug/L	SW846 8260B
2-Butanone (MEK)	ND	5.0	ug/L	SW846 8260B
1,2-Dichloroethene (total)	ND	1.0	ug/L	SW846 8260B
Acetonitrile	ND	20	ug/L	SW846 8260B
Acrolein	ND	20	ug/L	SW846 8260B
Chloroprene	ND	1.0	ug/L	SW846 8260B
2-Chloroethyl vinyl ether	ND	2.0	ug/L	SW846 8260B
Cyclohexanone	ND	20	ug/L	SW846 8260B
1,3-Dichlorobenzene	ND	1.0	ug/L	SW846 8260B
Dichlorodifluoromethane	ND	2.0	ug/L	SW846 8260B
Dichlorofluoromethane	ND	2.0	ug/L	SW846 8260B
1,4-Dioxane	ND	200	ug/L	SW846 8260B
hanol	ND	200	ug/L	SW846 8260B
Ethyl acetate	ND	5.0	ug/L	SW846 8260B
Ethyl ether	ND	2.0	ug/L	SW846 8260B
Ethyl methacrylate	ND	1.0	ug/L	SW846 8260B
Isobutyl alcohol	ND	50	ug/L	SW846 8260B
Isopropylbenzene	ND	1.0	ug/L	SW846 8260B
Isopropyl ether	ND	10	ug/L	SW846 8260B
Methacrylonitrile	ND	10	ug/L	SW846 8260B
tert-Butyl alcohol	ND	50	ug/L	SW846 8260B
Methyl methacrylate	ND	1.0	ug/L	SW846 8260B
2-Nitropropane	ND	2.0	ug/L	SW846 8260B
Propionitrile	ND	5.0	ug/L	SW846 8260B
Tetrahydrofuran	ND	5.0	ug/L	SW846 8260B
n-Butanol	ND	50	ug/L	SW846 8260B
Trichlorotrifluoroethane	ND	1.0	ug/L	SW846 8260B
Methyl tert-butyl ether	ND	5.0	ug/L	SW846 8260B
Hexane	ND	1.0	ug/L	SW846 8260B

SURROGATE	PERCENT RECOVERY	RECOVERY LIMITS
Dibromofluoromethane	98	(80 - 120)
1,2-Dichloroethane-d4	101	(72 - 127)
4-Bromofluorobenzene	95	(79 - 119)
Toluene-d8	94	(79 - 119)

NOTE(S):

Calculations are performed before rounding to avoid round-off errors in calculated results.

LABORATORY CONTROL SAMPLE EVALUATION REPORT

GC/MS Volatiles

Client Lot #...: D1H220253 Work Order #...: EJL531AC-LCS Matrix.....: SOLID
LCS Lot-Sample#: D1H270000-384 EJL531AD-LCSD
Prep Date.....: 08/24/01 Analysis Date..: 08/24/01
Prep Batch #...: 1239384 Analysis Time..: 11:18
Dilution Factor: 1

PARAMETER	PERCENT RECOVERY	RECOVERY LIMITS	RPD	RPD LIMITS	METHOD
1,1-Dichloroethene	106	(78 - 118)			SW846 8260B
	100	(78 - 118)	6.4	(0-25)	SW846 8260B
Benzene	104	(79 - 121)			SW846 8260B
	105	(79 - 121)	0.90	(0-25)	SW846 8260B
Chlorobenzene	88	(76 - 116)			SW846 8260B
	87	(76 - 116)	1.2	(0-25)	SW846 8260B
Toluene	88	(76 - 116)			SW846 8260B
	86	(76 - 116)	2.2	(0-25)	SW846 8260B
Trichloroethene	101	(83 - 123)			SW846 8260B
	99	(83 - 123)	1.6	(0-25)	SW846 8260B

SURROGATE	PERCENT RECOVERY	RECOVERY LIMITS
Dibromofluoromethane	106	(80 - 120)
	105	(80 - 120)
1,2-Dichloroethane-d4	104	(79 - 125)
	104	(79 - 125)
4-Bromofluorobenzene	96	(71 - 132)
	94	(71 - 132)
Toluene-d8	89	(77 - 117)
	89	(77 - 117)

NOTE(S):

Calculations are performed before rounding to avoid round-off errors in calculated results.

Bold print denotes control parameters

LABORATORY CONTROL SAMPLE DATA REPORT

GC/MS Volatiles

Client Lot #...: D1H220253 Work Order #...: EJL531AC-LCS Matrix.....: SOLID
LCS Lot-Sample#: D1H270000-384 EJL531AD-LCSD
Prep Date.....: 08/24/01 Analysis Date..: 08/24/01
Prep Batch #...: 1239384 Analysis Time..: 11:18
Dilution Factor: 1

PARAMETER	SPIKE AMOUNT	MEASURED AMOUNT	UNITS	PERCENT RECOVERY	RPD	METHOD
1,1-Dichloroethene	50.0	53.1	ug/kg	106		SW846 8260B
	50.0	49.8	ug/kg	100	6.4	SW846 8260B
Benzene	50.0	52.1	ug/kg	104		SW846 8260B
	50.0	52.5	ug/kg	105	0.90	SW846 8260B
Chlorobenzene	50.0	44.0	ug/kg	88		SW846 8260B
	50.0	43.5	ug/kg	87	1.2	SW846 8260B
Toluene	50.0	43.8	ug/kg	88		SW846 8260B
	50.0	42.8	ug/kg	86	2.2	SW846 8260B
Trichloroethene	50.0	50.5	ug/kg	101		SW846 8260B
	50.0	49.7	ug/kg	99	1.6	SW846 8260B

SURROGATE	PERCENT RECOVERY	RECOVERY LIMITS
Dibromofluoromethane	106	(80 - 120)
	105	(80 - 120)
1,2-Dichloroethane-d4	104	(79 - 125)
	104	(79 - 125)
4-Bromofluorobenzene	96	(71 - 132)
	94	(71 - 132)
Toluene-d8	89	(77 - 117)
	89	(77 - 117)

NOTE(S):

Calculations are performed before rounding to avoid round-off errors in calculated results.

Bold print denotes control parameters

LABORATORY CONTROL SAMPLE EVALUATION REPORT

GC/MS Volatiles

Client Lot #...: D1H220253 Work Order #...: EJXGN1AC-LCS Matrix.....: SOLID
LCS Lot-Sample#: D1H310000-335 EJXGN1AD-LCSD
Prep Date.....: 08/30/01 Analysis Date..: 08/30/01
Prep Batch #...: 1243335 Analysis Time..: 19:27
Dilution Factor: 1

PARAMETER	PERCENT RECOVERY	RECOVERY LIMITS	RPD	RPD LIMITS	METHOD
1,1-Dichloroethene	102	(68 - 119)			SW846 8260B
	88	(68 - 119)	15	(0-30)	SW846 8260B
Benzene	105	(79 - 119)			SW846 8260B
	96	(79 - 119)	9.4	(0-30)	SW846 8260B
Chlorobenzene	92	(78 - 118)			SW846 8260B
	85	(78 - 118)	7.1	(0-30)	SW846 8260B
Trichloroethene	108	(84 - 124)			SW846 8260B
	97	(84 - 124)	11	(0-30)	SW846 8260B
Toluene	92	(77 - 116)			SW846 8260B
	87	(77 - 116)	5.1	(0-30)	SW846 8260B

SURROGATE	PERCENT RECOVERY	RECOVERY LIMITS
Dibromofluoromethane	109	(69 - 121)
	97	(69 - 121)
1,2-Dichloroethane-d4	85	(60 - 117)
	73	(60 - 117)
4-Bromofluorobenzene	99	(48 - 129)
	86	(48 - 129)
Toluene-d8	89	(57 - 138)
	83	(57 - 138)

NOTE(S):

Calculations are performed before rounding to avoid round-off errors in calculated results.

Bold print denotes control parameters

LABORATORY CONTROL SAMPLE DATA REPORT

GC/MS Volatiles

Client Lot #...: D1H220253 Work Order #...: EJXGN1AC-LCS Matrix.....: SOLID
LCS Lot-Sample#: D1H310000-335 EJXGN1AD-LCSD
Prep Date.....: 08/30/01 Analysis Date..: 08/30/01
Prep Batch #...: 1243335 Analysis Time..: 19:27
Dilution Factor: 1

PARAMETER	SPIKE AMOUNT	MEASURED AMOUNT	UNITS	PERCENT RECOVERY	RPD	METHOD
1,1-Dichloroethene	2000	2040	ug/kg	102		SW846 8260B
	2000	1760	ug/kg	88	15	SW846 8260B
Benzene	2000	2100	ug/kg	105		SW846 8260B
	2000	1910	ug/kg	96	9.4	SW846 8260B
Chlorobenzene	2000	1830	ug/kg	92		SW846 8260B
	2000	1710	ug/kg	85	7.1	SW846 8260B
Trichloroethene	2000	2150	ug/kg	108		SW846 8260B
	2000	1930	ug/kg	97	11	SW846 8260B
Toluene	2000	1840	ug/kg	92		SW846 8260B
	2000	1750	ug/kg	87	5.1	SW846 8260B

SURROGATE	PERCENT RECOVERY	RECOVERY LIMITS
Dibromofluoromethane	109	(69 - 121)
	97	(69 - 121)
1,2-Dichloroethane-d4	85	(60 - 117)
	73	(60 - 117)
4-Bromofluorobenzene	99	(48 - 129)
	86	(48 - 129)
Toluene-d8	89	(57 - 138)
	83	(57 - 138)

NOTE(S):

Calculations are performed before rounding to avoid round-off errors in calculated results.

Bold print denotes control parameters

LABORATORY CONTROL SAMPLE EVALUATION REPORT

GC/MS Volatiles

Client Lot #...: D1H220253 Work Order #...: EJX501AC-LCS Matrix.....: SOLID
LCS Lot-Sample#: D1H310000-446 EJX501AD-LCSD
Prep Date.....: 08/22/01 Analysis Date..: 08/30/01
Prep Batch #...: 1243446 Analysis Time..: 20:45
Dilution Factor: 1

PARAMETER	PERCENT RECOVERY	RECOVERY LIMITS	RPD	RPD LIMITS	METHOD
1,1-Dichloroethene	89	(68 - 119)			SW846 8260B
	91	(68 - 119)	1.9	(0-30)	SW846 8260B
Benzene	94	(79 - 119)			SW846 8260B
	96	(79 - 119)	2.0	(0-30)	SW846 8260B
Chlorobenzene	84	(78 - 118)			SW846 8260B
	85	(78 - 118)	0.47	(0-30)	SW846 8260B
Trichloroethene	96	(84 - 124)			SW846 8260B
	94	(84 - 124)	2.8	(0-30)	SW846 8260B
Toluene	85	(77 - 116)			SW846 8260B
	85	(77 - 116)	0.010	(0-30)	SW846 8260B

SURROGATE	PERCENT RECOVERY	RECOVERY LIMITS
Dibromofluoromethane	96	(69 - 121)
	93	(69 - 121)
1,2-Dichloroethane-d4	71	(60 - 117)
	72	(60 - 117)
4-Bromofluorobenzene	86	(48 - 129)
	93	(48 - 129)
Toluene-d8	80	(57 - 138)
	80	(57 - 138)

NOTE(S):

Calculations are performed before rounding to avoid round-off errors in calculated results.

Bold print denotes control parameters

LABORATORY CONTROL SAMPLE DATA REPORT

GC/MS Volatiles

Client Lot #...: D1H220253 Work Order #...: EJX501AC-LCS Matrix.....: SOLID
LCS Lot-Sample#: D1H310000-446 EJX501AD-LCSD
Prep Date.....: 08/22/01 Analysis Date..: 08/30/01
Prep Batch #...: 1243446 Analysis Time..: 20:45
Dilution Factor: 1

PARAMETER	SPIKE AMOUNT	MEASURED AMOUNT	UNITS	PERCENT RECOVERY	RPD	METHOD
1,1-Dichloroethene	2000	1780	ug/kg	89		SW846 8260B
	2000	1810	ug/kg	91	1.9	SW846 8260B
Benzene	2000	1870	ug/kg	94		SW846 8260B
	2000	1910	ug/kg	96	2.0	SW846 8260B
Chlorobenzene	2000	1690	ug/kg	84		SW846 8260B
	2000	1700	ug/kg	85	0.47	SW846 8260B
Trichloroethene	2000	1920	ug/kg	96		SW846 8260B
	2000	1870	ug/kg	94	2.8	SW846 8260B
Toluene	2000	1700	ug/kg	85		SW846 8260B
	2000	1700	ug/kg	85	0.010	SW846 8260B

SURROGATE	PERCENT RECOVERY	RECOVERY LIMITS
Dibromofluoromethane	96	(69 - 121)
	93	(69 - 121)
1,2-Dichloroethane-d4	71	(60 - 117)
	72	(60 - 117)
4-Bromofluorobenzene	86	(48 - 129)
	93	(48 - 129)
Toluene-d8	80	(57 - 138)
	80	(57 - 138)

NOTE(S):

Calculations are performed before rounding to avoid round-off errors in calculated results.

Bold print denotes control parameters

LABORATORY CONTROL SAMPLE EVALUATION REPORT

GC/MS Volatiles

Client Lot #...: D1H220253 Work Order #...: EJ47N1AC-LCS Matrix.....: WATER
LCS Lot-Sample#: D1I060000-357 EJ47N1AD-LCSD
Prep Date.....: 09/04/01 Analysis Date..: 09/04/01
Prep Batch #...: 1249357 Analysis Time..: 15:39
Dilution Factor: 1

PARAMETER	PERCENT RECOVERY	RECOVERY LIMITS	RPD	RPD LIMITS	METHOD
1,1-Dichloroethene	92	(79 - 119)			SW846 8260B
	90	(79 - 119)	2.5	(0-20)	SW846 8260B
Benzene	98	(79 - 119)			SW846 8260B
	96	(79 - 119)	1.7	(0-20)	SW846 8260B
Chlorobenzene	93	(76 - 116)			SW846 8260B
	90	(76 - 116)	2.4	(0-20)	SW846 8260B
Toluene	90	(75 - 122)			SW846 8260B
	88	(75 - 122)	2.4	(0-20)	SW846 8260B
Trichloroethene	99	(81 - 121)			SW846 8260B
	97	(81 - 121)	2.1	(0-20)	SW846 8260B

SURROGATE	PERCENT RECOVERY	RECOVERY LIMITS
Dibromofluoromethane	99	(80 - 120)
	99	(80 - 120)
1,2-Dichloroethane-d4	103	(72 - 127)
	103	(72 - 127)
4-Bromofluorobenzene	96	(79 - 119)
	96	(79 - 119)
Toluene-d8	96	(79 - 119)
	94	(79 - 119)

NOTE(S):

Calculations are performed before rounding to avoid round-off errors in calculated results.

Bold print denotes control parameters

LABORATORY CONTROL SAMPLE DATA REPORT

GC/MS Volatiles

Client Lot #...: D1H220253 Work Order #...: EJ47N1AC-LCS Matrix.....: WATER
LCS Lot-Sample#: D1I060000-357 EJ47N1AD-LCSD
Prep Date.....: 09/04/01 Analysis Date..: 09/04/01
Prep Batch #...: 1249357 Analysis Time..: 15:39
Dilution Factor: 1

PARAMETER	SPIKE AMOUNT	MEASURED AMOUNT	UNITS	PERCENT RECOVERY	RPD	METHOD
1,1-Dichloroethene	10.0	9.23	ug/L	92		SW846 8260B
	10.0	9.01	ug/L	90	2.5	SW846 8260B
Benzene	10.0	9.80	ug/L	98		SW846 8260B
	10.0	9.64	ug/L	96	1.7	SW846 8260B
Chlorobenzene	10.0	9.26	ug/L	93		SW846 8260B
	10.0	9.04	ug/L	90	2.4	SW846 8260B
Toluene	10.0	9.00	ug/L	90		SW846 8260B
	10.0	8.79	ug/L	88	2.4	SW846 8260B
Trichloroethene	10.0	9.90	ug/L	99		SW846 8260B
	10.0	9.69	ug/L	97	2.1	SW846 8260B

SURROGATE	PERCENT RECOVERY	RECOVERY LIMITS
Dibromofluoromethane	99	(80 - 120)
	99	(80 - 120)
1,2-Dichloroethane-d4	103	(72 - 127)
	103	(72 - 127)
4-Bromofluorobenzene	96	(79 - 119)
	96	(79 - 119)
Toluene-d8	96	(79 - 119)
	94	(79 - 119)

NOTE(S):

Calculations are performed before rounding to avoid round-off errors in calculated results.

Bold print denotes control parameters

MATRIX SPIKE SAMPLE EVALUATION REPORT

GC/MS Volatiles

Client Lot #...: D1H220253 Work Order #...: EJCEP1AN-MS Matrix.....: SOLID
MS Lot-Sample #: D1H210251-001 EJCEP1AP-MSD
Date Sampled...: 08/21/01 12:10 Date Received..: 08/21/01
Prep Date.....: 08/24/01 Analysis Date..: 08/24/01
Prep Batch #...: 1239384 Analysis Time..: 14:08
Dilution Factor: 1

PARAMETER	PERCENT RECOVERY	RECOVERY LIMITS	RPD	RPD LIMITS	METHOD
1,1-Dichloroethene	93	(78 - 118)			SW846 8260B
	94	(78 - 118)	0.82	(0-25)	SW846 8260B
Benzene	96	(79 - 121)			SW846 8260B
	95	(79 - 121)	0.61	(0-25)	SW846 8260B
Chlorobenzene	75 a	(76 - 116)			SW846 8260B
	77	(76 - 116)	2.2	(0-25)	SW846 8260B
Toluene	74 a	(76 - 116)			SW846 8260B
	77	(76 - 116)	3.4	(0-25)	SW846 8260B
Trichloroethene	93	(83 - 123)			SW846 8260B
	90	(83 - 123)	2.9	(0-25)	SW846 8260B

SURROGATE	PERCENT RECOVERY	RECOVERY LIMITS
bromofluoromethane	104	(80 - 120)
	105	(80 - 120)
1,2-Dichloroethane-d4	104	(79 - 125)
	105	(79 - 125)
4-Bromofluorobenzene	91	(71 - 132)
	95	(71 - 132)
Toluene-d8	83	(77 - 117)
	87	(77 - 117)

NOTE(S):

Calculations are performed before rounding to avoid round-off errors in calculated results.

Bold print denotes control parameters

a Spiked analyte recovery is outside stated control limits.

MATRIX SPIKE SAMPLE DATA REPORT

GC/MS Volatiles

Client Lot #...: D1H220253 Work Order #...: EJCEP1AN-MS Matrix.....: SOLID
MS Lot-Sample #: D1H210251-001 EJCEP1AP-MSD
Date Sampled...: 08/21/01 12:10 Date Received..: 08/21/01
Prep Date.....: 08/24/01 Analysis Date..: 08/24/01
Prep Batch #...: 1239384 Analysis Time..: 14:08
Dilution Factor: 1

PARAMETER	SAMPLE AMOUNT	SPIKE AMT	MEASRD AMOUNT	UNITS	PERCENT RECOVERY	RPD	METHOD
1,1-Dichloroethene	ND	50.0	46.6	ug/kg	93		SW846 8260B
	ND	50.0	47.0	ug/kg	94	0.82	SW846 8260B
Benzene	ND	50.0	47.9	ug/kg	96		SW846 8260B
	ND	50.0	47.6	ug/kg	95	0.61	SW846 8260B
Chlorobenzene	ND	50.0	37.5	ug/kg	75 a		SW846 8260B
	ND	50.0	38.3	ug/kg	77	2.2	SW846 8260B
Toluene	ND	50.0	37.2	ug/kg	74 a		SW846 8260B
	ND	50.0	38.5	ug/kg	77	3.4	SW846 8260B
Trichloroethene	ND	50.0	46.3	ug/kg	93		SW846 8260B
	ND	50.0	45.0	ug/kg	90	2.9	SW846 8260B

SURROGATE	PERCENT RECOVERY	RECOVERY LIMITS
bromofluoromethane	104	(80 - 120)
	105	(80 - 120)
1,2-Dichloroethane-d4	104	(79 - 125)
	105	(79 - 125)
4-Bromofluorobenzene	91	(71 - 132)
	95	(71 - 132)
Toluene-d8	83	(77 - 117)
	87	(77 - 117)

NOTE(S):

Calculations are performed before rounding to avoid round-off errors in calculated results.

Bold print denotes control parameters

a Spiked analyte recovery is outside stated control limits.

MATRIX SPIKE SAMPLE EVALUATION REPORT

GC/MS Volatiles

Client Lot #...: D1H220253 Work Order #...: EJK921AL-MS Matrix.....: WATER
MS Lot-Sample #: D1H250179-002 EJK921AM-MSD
Date Sampled...: 08/23/01 12:50 Date Received..: 08/25/01
Prep Date.....: 09/04/01 Analysis Date..: 09/04/01
Prep Batch #...: 1249357 Analysis Time..: 20:11
Dilution Factor: 10

PARAMETER	PERCENT RECOVERY	RECOVERY LIMITS	RPD	RPD LIMITS	METHOD
1,1-Dichloroethene	92	(79 - 119)			SW846 8260B
	88	(79 - 119)	4.6	(0-20)	SW846 8260B
Benzene	97	(79 - 119)			SW846 8260B
	93	(79 - 119)	4.0	(0-20)	SW846 8260B
Chlorobenzene	91	(76 - 116)			SW846 8260B
	89	(76 - 116)	2.6	(0-20)	SW846 8260B
Toluene	89	(75 - 122)			SW846 8260B
	88	(75 - 122)	1.6	(0-20)	SW846 8260B
Trichloroethene	97	(81 - 121)			SW846 8260B
	94	(81 - 121)	3.4	(0-20)	SW846 8260B

SURROGATE	PERCENT RECOVERY	RECOVERY LIMITS
Dibromofluoromethane	99	(80 - 120)
	97	(80 - 120)
1,2-Dichloroethane-d4	102	(72 - 127)
	99	(72 - 127)
4-Bromofluorobenzene	97	(79 - 119)
	95	(79 - 119)
Toluene-d8	94	(79 - 119)
	95	(79 - 119)

NOTE(S):

Calculations are performed before rounding to avoid round-off errors in calculated results.

Bold print denotes control parameters

MATRIX SPIKE SAMPLE DATA REPORT

GC/MS Volatiles

Client Lot #...: D1H220253 Work Order #...: EJPK21AC-MS Matrix.....: SOLID
MS Lot-Sample #: D1H280270-002 EJPK21AD-MSD
Date Sampled...: 08/28/01 09:15 Date Received..: 08/28/01
Prep Date.....: 08/30/01 Analysis Date..: 08/30/01
Prep Batch #...: 1243335 Analysis Time..: 23:45
Dilution Factor: 1

PARAMETER	SAMPLE AMOUNT	SPIKE AMT	MEASRD AMOUNT	UNITS	PERCENT RECOVERY	RPD	METHOD
1,1-Dichloroethene	100	2000	1100	ug/kg	50 a		SW846 8260B
	100	2000	1140	ug/kg	52 a	4.1	SW846 8260B
Benzene	ND	2000	1130	ug/kg	57 a		SW846 8260B
	ND	2000	1150	ug/kg	58 a	1.6	SW846 8260B
Chlorobenzene	ND	2000	1030	ug/kg	51 a		SW846 8260B
	ND	2000	1090	ug/kg	54 a	5.3	SW846 8260B
Trichloroethene	160	2000	1300	ug/kg	57 a		SW846 8260B
	160	2000	1370	ug/kg	61 a	5.3	SW846 8260B
Toluene	ND	2000	1050	ug/kg	53 a		SW846 8260B
	ND	2000	1110	ug/kg	55 a	4.9	SW846 8260B

SURROGATE	PERCENT RECOVERY	RECOVERY LIMITS
ibromofluoromethane	60 *	(69 - 121)
	60 *	(69 - 121)
1,2-Dichloroethane-d4	43 *	(60 - 117)
	42 *	(60 - 117)
4-Bromofluorobenzene	51	(48 - 129)
	53	(48 - 129)
Toluene-d8	50 *	(57 - 138)
	52 *	(57 - 138)

NOTE(S):

Calculations are performed before rounding to avoid round-off errors in calculated results.

Bold print denotes control parameters

a Spiked analyte recovery is outside stated control limits.

* Surrogate recovery is outside stated control limits.

METHOD BLANK REPORT

GC/MS Semivolatiles

Client Lot #...: D1H220253 Work Order #...: EJEVG1AA Matrix.....: SOLID
MB Lot-Sample #: D1H230000-171

Prep Date.....: 08/23/01 Analysis Time..: 21:31

Analysis Date..: 08/27/01 Prep Batch #...: 1235171
Dilution Factor: 1

PARAMETER	RESULT	REPORTING LIMIT	UNITS	METHOD
Acenaphthene	ND	330	ug/kg	SW846 8270C
Acenaphthylene	ND	330	ug/kg	SW846 8270C
Anthracene	ND	330	ug/kg	SW846 8270C
Benzo(a)anthracene	ND	330	ug/kg	SW846 8270C
Benzo(b)fluoranthene	ND	330	ug/kg	SW846 8270C
Benzo(k)fluoranthene	ND	330	ug/kg	SW846 8270C
Benzo(ghi)perylene	ND	330	ug/kg	SW846 8270C
Benzo(a)pyrene	ND	330	ug/kg	SW846 8270C
Chrysene	ND	330	ug/kg	SW846 8270C
Dibenz(a,h)anthracene	ND	330	ug/kg	SW846 8270C
Fluoranthene	ND	330	ug/kg	SW846 8270C
Fluorene	ND	330	ug/kg	SW846 8270C
Indeno(1,2,3-cd)pyrene	ND	330	ug/kg	SW846 8270C
Naphthalene	ND	330	ug/kg	SW846 8270C
rene	ND	330	ug/kg	SW846 8270C
Phenanthrene	ND	330	ug/kg	SW846 8270C

SURROGATE	PERCENT RECOVERY	RECOVERY LIMITS
2-Fluorophenol	54	(34 - 97)
Phenol-d5	51	(39 - 90)
Nitrobenzene-d5	52	(33 - 97)
2-Fluorobiphenyl	50	(39 - 91)
2,4,6-Tribromophenol	46	(29 - 95)
Terphenyl-d14	62	(30 - 102)

NOTE(S):

Calculations are performed before rounding to avoid round-off errors in calculated results.

LABORATORY CONTROL SAMPLE EVALUATION REPORT

GC/MS Semivolatiles

Client Lot #...: D1H220253 Work Order #...: EJEVG1AC-LCS Matrix.....: SOLID
LCS Lot-Sample#: D1H230000-171 EJEVG1AD-LCSD
Prep Date.....: 08/23/01 Analysis Date..: 08/28/01
Prep Batch #...: 1235171 Analysis Time..: 20:57
Dilution Factor: 1

PARAMETER	PERCENT RECOVERY	RECOVERY LIMITS	RPD	RPD LIMITS	METHOD
Acenaphthene	52	(49 - 93)			SW846 8270C
	53	(49 - 93)	1.8	(0-40)	SW846 8270C
Pyrene	58	(48 - 97)			SW846 8270C
	59	(48 - 97)	1.2	(0-40)	SW846 8270C
4-Chloro-3-methylphenol	55	(52 - 93)			SW846 8270C
	56	(52 - 93)	1.9	(0-40)	SW846 8270C
2-Chlorophenol	54	(51 - 91)			SW846 8270C
	56	(51 - 91)	3.5	(0-36)	SW846 8270C
1,4-Dichlorobenzene	48	(46 - 86)			SW846 8270C
	50	(46 - 86)	4.1	(0-40)	SW846 8270C
2,4-Dinitrotoluene	56	(53 - 105)			SW846 8270C
	59	(53 - 105)	6.7	(0-40)	SW846 8270C
4-Nitrophenol	50	(29 - 115)			SW846 8270C
	49	(29 - 115)	0.50	(0-40)	SW846 8270C
N-Nitrosodi-n-propyl-amine	53	(46 - 86)			SW846 8270C
	52	(46 - 86)	2.1	(0-40)	SW846 8270C
Pentachlorophenol	49	(27 - 97)			SW846 8270C
	47	(27 - 97)	3.3	(0-40)	SW846 8270C
Phenol	50	(50 - 90)			SW846 8270C
	52	(50 - 90)	3.1	(0-37)	SW846 8270C
1,2,4-Trichloro-benzene	54	(49 - 90)			SW846 8270C
	53	(49 - 90)	2.0	(0-40)	SW846 8270C

SURROGATE	PERCENT RECOVERY	RECOVERY LIMITS
2-Fluorophenol	56	(34 - 97)
	57	(34 - 97)
Phenol-d5	53	(39 - 90)
	56	(39 - 90)
Nitrobenzene-d5	54	(33 - 97)
	56	(33 - 97)
2-Fluorobiphenyl	54	(39 - 91)
	53	(39 - 91)
2,4,6-Tribromophenol	53	(29 - 95)
	52	(29 - 95)
Terphenyl-d14	60	(30 - 102)

(Continued on next page)

LABORATORY CONTROL SAMPLE EVALUATION REPORT

GC/MS Semivolatiles

Client Lot #...: D1H220253 Work Order #...: EJEVG1AC-LCS Matrix.....: SOLID
LCS Lot-Sample#: D1H230000-171 EJEVG1AD-LCSD

SURROGATE	PERCENT RECOVERY	RECOVERY LIMITS
	62	(30 - 102)

NOTE(S):

Calculations are performed before rounding to avoid round-off errors in calculated results.

Bold print denotes control parameters

LABORATORY CONTROL SAMPLE DATA REPORT

GC/MS Semivolatiles

Client Lot #...: D1H220253 Work Order #...: EJEVG1AC-LCS Matrix.....: SOLID
LCS Lot-Sample#: D1H230000-171 EJEVG1AD-LCSD
Prep Date.....: 08/23/01 Analysis Date..: 08/28/01
Prep Batch #...: 1235171 Analysis Time..: 20:57
Dilution Factor: 1

PARAMETER	SPIKE AMOUNT	MEASURED AMOUNT	UNITS	PERCENT RECOVERY	RPD	METHOD
Acenaphthene	3330	1750	ug/kg	52		SW846 8270C
	3330	1780	ug/kg	53	1.8	SW846 8270C
Pyrene	3330	1940	ug/kg	58		SW846 8270C
	3330	1960	ug/kg	59	1.2	SW846 8270C
4-Chloro-3-methylphenol	5000	2750	ug/kg	55		SW846 8270C
	5000	2800	ug/kg	56	1.9	SW846 8270C
2-Chlorophenol	5000	2680	ug/kg	54		SW846 8270C
	5000	2780	ug/kg	56	3.5	SW846 8270C
1,4-Dichlorobenzene	3330	1590	ug/kg	48		SW846 8270C
	3330	1660	ug/kg	50	4.1	SW846 8270C
2,4-Dinitrotoluene	3330	1850	ug/kg	56		SW846 8270C
	3330	1980	ug/kg	59	6.7	SW846 8270C
4-Nitrophenol	5000	2480	ug/kg	50		SW846 8270C
	5000	2460	ug/kg	49	0.50	SW846 8270C
N-Nitrosodi-n-propyl-amine	3330	1780	ug/kg	53		SW846 8270C
	3330	1740	ug/kg	52	2.1	SW846 8270C
Pentachlorophenol	5000	2430	ug/kg	49		SW846 8270C
	5000	2350	ug/kg	47	3.3	SW846 8270C
Phenol	5000	2520	ug/kg	50		SW846 8270C
	5000	2600	ug/kg	52	3.1	SW846 8270C
1,2,4-Trichloro-benzene	3330	1800	ug/kg	54		SW846 8270C
	3330	1760	ug/kg	53	2.0	SW846 8270C

SURROGATE	PERCENT RECOVERY	RECOVERY LIMITS
2-Fluorophenol	56	(34 - 97)
	57	(34 - 97)
Phenol-d5	53	(39 - 90)
	56	(39 - 90)
Nitrobenzene-d5	54	(33 - 97)
	56	(33 - 97)
2-Fluorobiphenyl	54	(39 - 91)
	53	(39 - 91)
2,4,6-Tribromophenol	53	(29 - 95)
	52	(29 - 95)
Terphenyl-d14	60	(30 - 102)

(Continued on next page)

LABORATORY CONTROL SAMPLE DATA REPORT

GC/MS Semivolatiles

Client Lot #...: D1H220253 **Work Order #...:** EJEVG1AC-LCS **Matrix.....:** SOLID
LCS Lot-Sample#: D1H230000-171 EJEVG1AD-LCSD

SURROGATE	PERCENT RECOVERY	RECOVERY LIMITS
	62	(30 - 102)

NOTE(S):

Calculations are performed before rounding to avoid round-off errors in calculated results.

Bold print denotes control parameters

MATRIX SPIKE SAMPLE EVALUATION REPORT

GC/MS Semivolatiles

Client Lot #...: D1H220253 Work Order #...: EJAJ61A7-MS Matrix.....: SOLID
MS Lot-Sample #: D1H210171-001 EJAJ61A8-MSD
Date Sampled...: 08/17/01 13:00 Date Received..: 08/21/01
Prep Date.....: 08/23/01 Analysis Date..: 08/27/01
Prep Batch #...: 1235171 Analysis Time..: 23:23
Dilution Factor: 1

PARAMETER	PERCENT RECOVERY	RECOVERY LIMITS	RPD	RPD LIMITS	METHOD
Acenaphthene	49	(49 - 93)			SW846 8270C
	45 a	(49 - 93)	7.7	(0-40)	SW846 8270C
Pyrene	50	(48 - 97)			SW846 8270C
	49	(48 - 97)	1.6	(0-40)	SW846 8270C
4-Chloro-3-methylphenol	50 a	(52 - 93)			SW846 8270C
	49 a	(52 - 93)	3.7	(0-40)	SW846 8270C
2-Chlorophenol	48 a	(51 - 91)			SW846 8270C
	43 a	(51 - 91)	11	(0-36)	SW846 8270C
1,4-Dichlorobenzene	41 a	(46 - 86)			SW846 8270C
	36 a	(46 - 86)	13	(0-40)	SW846 8270C
2,4-Dinitrotoluene	56	(53 - 105)			SW846 8270C
	53	(53 - 105)	5.6	(0-40)	SW846 8270C
4-Nitrophenol	41	(29 - 115)			SW846 8270C
	31	(29 - 115)	29	(0-40)	SW846 8270C
N-Nitrosodi-n-propyl-amine	46	(46 - 86)			SW846 8270C
	41 a	(46 - 86)	12	(0-40)	SW846 8270C
Pentachlorophenol	51	(27 - 97)			SW846 8270C
	47	(27 - 97)	8.2	(0-40)	SW846 8270C
Phenol	44 a	(50 - 90)			SW846 8270C
	40 a	(50 - 90)	10	(0-37)	SW846 8270C
1,2,4-Trichloro-benzene	44 a	(49 - 90)			SW846 8270C
	40 a	(49 - 90)	8.8	(0-40)	SW846 8270C

SURROGATE	PERCENT RECOVERY	RECOVERY LIMITS
2-Fluorophenol	49	(34 - 97)
	43	(34 - 97)
Phenol-d5	48	(39 - 90)
	42	(39 - 90)
Nitrobenzene-d5	56	(33 - 97)
	44	(33 - 97)
2-Fluorobiphenyl	51	(39 - 91)
	46	(39 - 91)
2,4,6-Tribromophenol	54	(29 - 95)
	48	(29 - 95)

(Continued on next page)

MATRIX SPIKE SAMPLE EVALUATION REPORT

GC/MS Semivolatiles

Client Lot #...: D1H220253 **Work Order #...:** EJAJ61A7-MS **Matrix.....:** SOLID
MS Lot-Sample #: D1H210171-001 EJAJ61A8-MSD

SURROGATE	PERCENT RECOVERY	RECOVERY LIMITS
Terphenyl-d14	53	(30 - 102)
	51	(30 - 102)

NOTE(S):

Calculations are performed before rounding to avoid round-off errors in calculated results.

Bold print denotes control parameters

a Spiked analyte recovery is outside stated control limits.

Results and reporting limits have been adjusted for dry weight.

MATRIX SPIKE SAMPLE DATA REPORT

GC/MS Semivolatiles

Client Lot #...: D1H220253 Work Order #...: EJAJ61A7-MS Matrix.....: SOLID
MS Lot-Sample #: D1H210171-001 EJAJ61A8-MSD
Date Sampled...: 08/17/01 13:00 Date Received..: 08/21/01
Prep Date.....: 08/23/01 Analysis Date..: 08/27/01
Prep Batch #...: 1235171 Analysis Time..: 23:23
Dilution Factor: 1

PARAMETER	SAMPLE AMOUNT	SPIKE AMT	MEASRD AMOUNT	UNITS	PERCENT RECOVERY	RPD	METHOD
Acenaphthene	100	3910	2020	ug/kg	49		SW846 8270C
	100	3910	1870	ug/kg	45 a	7.7	SW846 8270C
Pyrene	73	3910	2010	ug/kg	50		SW846 8270C
	73	3910	1980	ug/kg	49	1.6	SW846 8270C
4-Chloro-3-methylphenol	ND	5860	2960	ug/kg	50 a		SW846 8270C
	ND	5860	2850	ug/kg	49 a	3.7	SW846 8270C
2-Chlorophenol	ND	5860	2800	ug/kg	48 a		SW846 8270C
	ND	5860	2510	ug/kg	43 a	11	SW846 8270C
1,4-Dichlorobenzene	ND	3910	1580	ug/kg	41 a		SW846 8270C
	ND	3910	1400	ug/kg	36 a	13	SW846 8270C
2,4-Dinitrotoluene	ND	3910	2190	ug/kg	56		SW846 8270C
	ND	3910	2070	ug/kg	53	5.6	SW846 8270C
4-Nitrophenol	ND	5860	2390	ug/kg	41		SW846 8270C
	ND	5860	1790	ug/kg	31	29	SW846 8270C
N-Nitrosodi-n-propyl-amine	ND	3910	1810	ug/kg	46		SW846 8270C
	ND	3910	1610	ug/kg	41 a	12	SW846 8270C
Pentachlorophenol	ND	5860	3000	ug/kg	51		SW846 8270C
	ND	5860	2770	ug/kg	47	8.2	SW846 8270C
Phenol	ND	5860	2590	ug/kg	44 a		SW846 8270C
	ND	5860	2340	ug/kg	40 a	10	SW846 8270C
1,2,4-Trichloro-benzene	ND	3910	1720	ug/kg	44 a		SW846 8270C
	ND	3910	1570	ug/kg	40 a	8.8	SW846 8270C

SURROGATE	PERCENT RECOVERY	RECOVERY LIMITS
2-Fluorophenol	49	(34 - 97)
	43	(34 - 97)
Phenol-d5	48	(39 - 90)
	42	(39 - 90)
Nitrobenzene-d5	56	(33 - 97)
	44	(33 - 97)
2-Fluorobiphenyl	51	(39 - 91)
	46	(39 - 91)
2,4,6-Tribromophenol	54	(29 - 95)
	48	(29 - 95)

(Continued on next page)

MATRIX SPIKE SAMPLE DATA REPORT

GC/MS Semivolatiles

Client Lot #...: D1H220253 Work Order #...: EJAJ61A7-MS Matrix.....: SOLID
MS Lot-Sample #: D1H210171-001 EJAJ61A8-MSD

SURROGATE	PERCENT RECOVERY	RECOVERY LIMITS
Terphenyl-d14	53	(30 - 102)
	51	(30 - 102)

NOTE(S):

Calculations are performed before rounding to avoid round-off errors in calculated results.

Bold print denotes control parameters

a Spiked analyte recovery is outside stated control limits.

Results and reporting limits have been adjusted for dry weight.

METHOD BLANK REPORT

GC Semivolatiles

Client Lot #...: D1H220253
MB Lot-Sample #: D1H280000-213

Work Order #...: EJM6P1AA

Matrix.....: SOLID

Prep Date.....: 08/28/01

Analysis Time..: 17:14

Analysis Date..: 08/30/01

Prep Batch #...: 1240213

Dilution Factor: 1

PARAMETER	RESULT	REPORTING LIMIT	UNITS	METHOD
Aroclor 1016	ND	33	ug/kg	SW846 8082
Aroclor 1221	ND	33	ug/kg	SW846 8082
Aroclor 1232	ND	33	ug/kg	SW846 8082
Aroclor 1242	ND	33	ug/kg	SW846 8082
Aroclor 1248	ND	33	ug/kg	SW846 8082
Aroclor 1254	ND	33	ug/kg	SW846 8082
Aroclor 1260	ND	33	ug/kg	SW846 8082

SURROGATE	PERCENT RECOVERY	RECOVERY LIMITS
Decachlorobiphenyl	76	(62 - 145)
Tetrachloro-m-xylene	78	(60 - 130)

NOTE(S):

culations are performed before rounding to avoid round-off errors in calculated results.

METHOD BLANK REPORT

GC Semivolatiles

Client Lot #...: D1H220253
MB Lot-Sample #: D1I050000-200
Analysis Date..: 09/07/01
Dilution Factor: 1

Work Order #...: EJ2RF1AA
Prep Date.....: 09/05/01
Prep Batch #...: 1248200

Matrix.....: SOLID
Analysis Time..: 16:58

PARAMETER	RESULT	REPORTING LIMIT	UNITS	METHOD
Aroclor 1016	ND	33	ug/kg	SW846 8082
Aroclor 1221	ND	33	ug/kg	SW846 8082
Aroclor 1232	ND	33	ug/kg	SW846 8082
Aroclor 1242	ND	33	ug/kg	SW846 8082
Aroclor 1248	ND	33	ug/kg	SW846 8082
Aroclor 1254	ND	33	ug/kg	SW846 8082
Aroclor 1260	ND	33	ug/kg	SW846 8082

SURROGATE	PERCENT RECOVERY	RECOVERY LIMITS
Decachlorobiphenyl	89	(62 - 145)
Tetrachloro-m-xylene	82	(60 - 130)

NOTE(S):

Calculations are performed before rounding to avoid round-off errors in calculated results.

LABORATORY CONTROL SAMPLE EVALUATION REPORT

GC Semivolatiles

Client Lot #...: D1H220253 Work Order #...: EJM6P1AC-LCS Matrix.....: SOLID
LCS Lot-Sample#: D1H280000-213 EJM6P1AD-LCSD
Prep Date.....: 08/28/01 Analysis Date..: 08/30/01
Prep Batch #...: 1240213 Analysis Time..: 17:48
Dilution Factor: 1

PARAMETER	PERCENT RECOVERY	RECOVERY LIMITS	RPD	RPD LIMITS	METHOD
Aroclor 1016	71	(65 - 130)			SW846 8082
	74	(65 - 130)	4.2	(0-23)	SW846 8082
Aroclor 1260	87	(66 - 128)			SW846 8082
	87	(66 - 128)	0.70	(0-23)	SW846 8082

SURROGATE	PERCENT RECOVERY	RECOVERY LIMITS
Decachlorobiphenyl	82	(62 - 145)
	84	(62 - 145)
Tetrachloro-m-xylene	70	(60 - 130)
	65	(60 - 130)

NOTE(S):

Calculations are performed before rounding to avoid round-off errors in calculated results.

old print denotes control parameters

LABORATORY CONTROL SAMPLE DATA REPORT

GC Semivolatiles

Client Lot #...: D1H220253 Work Order #...: EJM6P1AC-LCS Matrix.....: SOLID
LCS Lot-Sample#: D1H280000-213 EJM6P1AD-LCSD
Prep Date.....: 08/28/01 Analysis Date..: 08/30/01
Prep Batch #...: 1240213 Analysis Time..: 17:48
Dilution Factor: 1

PARAMETER	SPIKE AMOUNT	MEASURED AMOUNT	UNITS	PERCENT RECOVERY	RPD	METHOD
Aroclor 1016	66.7	47.0	ug/kg	71		SW846 8082
	66.7	49.0	ug/kg	74	4.2	SW846 8082
Aroclor 1260	66.7	57.7	ug/kg	87		SW846 8082
	66.7	58.1	ug/kg	87	0.70	SW846 8082

SURROGATE	PERCENT RECOVERY	RECOVERY LIMITS
Decachlorobiphenyl	82	(62 - 145)
	84	(62 - 145)
Tetrachloro-m-xylene	70	(60 - 130)
	65	(60 - 130)

NOTE(S):

Calculations are performed before rounding to avoid round-off errors in calculated results.

Bold print denotes control parameters

LABORATORY CONTROL SAMPLE EVALUATION REPORT

GC Semivolatiles

Client Lot #...: D1H220253 Work Order #...: EJ2RF1AE-LCS Matrix.....: SOLID
LCS Lot-Sample#: D1I050000-200 EJ2RF1AF-LCSD
Prep Date.....: 09/05/01 Analysis Date..: 09/07/01
Prep Batch #...: 1248200 Analysis Time..: 17:28
Dilution Factor: 1

PARAMETER	PERCENT RECOVERY	RECOVERY LIMITS	RPD	RPD LIMITS	METHOD
Aroclor 1016	87	(65 - 130)			SW846 8082
	75	(65 - 130)	14	(0-23)	SW846 8082
Aroclor 1260	86	(66 - 128)			SW846 8082
	84	(66 - 128)	2.2	(0-23)	SW846 8082

SURROGATE	PERCENT RECOVERY	RECOVERY LIMITS
Decachlorobiphenyl	92	(62 - 145)
	89	(62 - 145)
Tetrachloro-m-xylene	89	(60 - 130)
	77	(60 - 130)

NOTE(S):

Calculations are performed before rounding to avoid round-off errors in calculated results.

Bold print denotes control parameters

LABORATORY CONTROL SAMPLE DATA REPORT

GC Semivolatiles

Client Lot #...: D1H220253 Work Order #...: EJ2RF1AE-LCS Matrix.....: SOLID
LCS Lot-Sample#: D1I050000-200 EJ2RF1AF-LCSD
Prep Date.....: 09/05/01 Analysis Date..: 09/07/01
Prep Batch #...: 1248200 Analysis Time..: 17:28
Dilution Factor: 1

PARAMETER	SPIKE AMOUNT	MEASURED AMOUNT	UNITS	PERCENT RECOVERY	RPD	METHOD
Aroclor 1016	66.7	57.9	ug/kg	87		SW846 8082
	66.7	50.3	ug/kg	75	14	SW846 8082
Aroclor 1260	66.7	57.1	ug/kg	86		SW846 8082
	66.7	55.9	ug/kg	84	2.2	SW846 8082

SURROGATE	PERCENT RECOVERY	RECOVERY LIMITS
Decachlorobiphenyl	92	(62 - 145)
	89	(62 - 145)
Tetrachloro-m-xylene	89	(60 - 130)
	77	(60 - 130)

NOTE(S):

Calculations are performed before rounding to avoid round-off errors in calculated results.

Bold print denotes control parameters

MATRIX SPIKE SAMPLE EVALUATION REPORT

GC Semivolatiles

Client Lot #...: D1H220253 Work Order #...: EJD8V1AP-MS Matrix.....: SD
MS Lot-Sample #: D1H220253-001 EJD8V1AQ-MSD
Date Sampled...: 08/20/01 12:15 Date Received..: 08/22/01
Prep Date.....: 08/28/01 Analysis Date..: 09/04/01
Prep Batch #...: 1240213 Analysis Time..: 13:25
Dilution Factor: 20

PARAMETER	PERCENT RECOVERY	RECOVERY LIMITS	RPD	RPD LIMITS	METHOD
Aroclor 1016	**0.0 DIL,N**	**(65 - 130)**			**SW846 8082**
	0.0 DIL,N	**(65 - 130)**	**0.0**	**(0-23)**	**SW846 8082**
Aroclor 1260	**0.0 DIL,N**	**(66 - 128)**			**SW846 8082**
	0.0 DIL,N	**(66 - 128)**	**0.0**	**(0-23)**	**SW846 8082**

SURROGATE	PERCENT RECOVERY	RECOVERY LIMITS
Decachlorobiphenyl	0.0	(62 - 145)
	Qualifiers: DIL,NC	
	0.0	(62 - 145)
	Qualifiers: DIL,NC	
Tetrachloro-m-xylene	0.0	(60 - 130)
	Qualifiers: DIL,NC	
	0.0	(60 - 130)
	Qualifiers: DIL,NC	

NOTE(S):

Calculations are performed before rounding to avoid round-off errors in calculated results.

Bold print denotes control parameters

DIL The concentration is estimated or not reported due to dilution or the presence of interfering analytes.

Results and reporting limits have been adjusted for dry weight.

NC The recovery and/or RPD were not calculated.

MATRIX SPIKE SAMPLE DATA REPORT

GC Semivolatiles

Client Lot #...: D1H220253 Work Order #...: EJD8V1AP-MS Matrix.....: SD
MS Lot-Sample #: D1H220253-001 EJD8V1AQ-MSD
Date Sampled...: 08/20/01 12:15 Date Received..: 08/22/01
Prep Date.....: 08/28/01 Analysis Date..: 09/04/01
Prep Batch #...: 1240213 Analysis Time..: 13:25
Dilution Factor: 20

PARAMETER	SAMPLE AMOUNT	SPIKE AMT	MEASRD AMOUNT	UNITS	PERCENT RECOVERY	RPD	METHOD
Aroclor 1016	ND	91.3		ug/kg	0.0		SW846 8082
		Qualifiers: DIL,NC					
	ND	91.3		ug/kg	0.0	0.0	SW846 8082
		Qualifiers: DIL,NC					
Aroclor 1260	ND	91.3		ug/kg	0.0		SW846 8082
		Qualifiers: DIL,NC					
	ND	91.3		ug/kg	0.0	0.0	SW846 8082
		Qualifiers: DIL,NC					

SURROGATE	PERCENT RECOVERY	RECOVERY LIMITS
Decachlorobiphenyl	0.0	(62 - 145)
	Qualifiers: DIL,NC	
	0.0	(62 - 145)
	Qualifiers: DIL,NC	
Tetrachloro-m-xylene	0.0	(60 - 130)
	Qualifiers: DIL,NC	
	0.0	(60 - 130)
	Qualifiers: DIL,NC	

NOTE(S):

Calculations are performed before rounding to avoid round-off errors in calculated results.

Bold print denotes control parameters

DIL The concentration is estimated or not reported due to dilution or the presence of interfering analytes.

Results and reporting limits have been adjusted for dry weight.

NC The recovery and/or RPD were not calculated.

MATRIX SPIKE SAMPLE EVALUATION REPORT

GC Semivolatiles

Client Lot #...: D1H220253 Work Order #...: EJD821AP-MS Matrix.....: SO
MS Lot-Sample #: D1H220253-003 EJD821AQ-MSD
Date Sampled...: 08/21/01 10:55 Date Received..: 08/22/01
Prep Date.....: 09/05/01 Analysis Date..: 09/07/01
Prep Batch #...: 1248200 Analysis Time..: 20:00
Dilution Factor: 1

PARAMETER	PERCENT RECOVERY	RECOVERY LIMITS	RPD	RPD LIMITS	METHOD
Aroclor 1016	275 a	(65 - 130)			SW846 8082
	275 a	(65 - 130)	0.10	(0-23)	SW846 8082
Aroclor 1260	98	(66 - 128)			SW846 8082
	83	(66 - 128)	11	(0-23)	SW846 8082

SURROGATE	PERCENT RECOVERY	RECOVERY LIMITS
Decachlorobiphenyl	87	(62 - 145)
	90	(62 - 145)
Tetrachloro-m-xylene	66	(60 - 130)
	67	(60 - 130)

NOTE(S):

Calculations are performed before rounding to avoid round-off errors in calculated results.

Bold print denotes control parameters

a Spiked analyte recovery is outside stated control limits.

Results and reporting limits have been adjusted for dry weight.

MATRIX SPIKE SAMPLE DATA REPORT

GC Semivolatiles

Client Lot #...: D1H220253 Work Order #...: EJD821AP-MS Matrix.....: SO
MS Lot-Sample #: D1H220253-003 EJD821AQ-MSD
Date Sampled...: 08/21/01 10:55 Date Received..: 08/22/01
Prep Date.....: 09/05/01 Analysis Date..: 09/07/01
Prep Batch #...: 1248200 Analysis Time..: 20:00
Dilution Factor: 1

PARAMETER	SAMPLE AMOUNT	SPIKE AMT	MEASRD AMOUNT	UNITS	PERCENT RECOVERY	RPD	METHOD
Aroclor 1016	ND	75.5	208	ug/kg	275 a		SW846 8082
	ND	75.5	208	ug/kg	275 a	0.10	SW846 8082
Aroclor 1260	38	75.5	112	ug/kg	98		SW846 8082
	38	75.5	101	ug/kg	83	11	SW846 8082

SURROGATE	PERCENT RECOVERY	RECOVERY LIMITS
Decachlorobiphenyl	87	(62 - 145)
	90	(62 - 145)
Tetrachloro-m-xylene	66	(60 - 130)
	67	(60 - 130)

NOTE(S):

Calculations are performed before rounding to avoid round-off errors in calculated results.

Bold print denotes control parameters

a Spiked analyte recovery is outside stated control limits.

Results and reporting limits have been adjusted for dry weight.

METHOD BLANK REPORT

TOTAL Metals

Client Lot #...: D1H220253 **Matrix.....:** SOLID

PARAMETER	RESULT	REPORTING LIMIT	UNITS	METHOD	PREPARATION-ANALYSIS DATE	WORK ORDER #
MB Lot-Sample #: D1H270000-374 **Prep Batch #...:** 1239374						
Arsenic	ND	1.0	mg/kg	SW846 6010B	08/29-08/30/01	EJL391CW
		Dilution Factor: 1				
		Analysis Time..: 18:28				
Barium	ND	1.0	mg/kg	SW846 6010B	08/29-08/30/01	EJL391AC
		Dilution Factor: 1				
		Analysis Time..: 18:28				
Cadmium	ND	0.50	mg/kg	SW846 6010B	08/29-08/30/01	EJL391CX
		Dilution Factor: 1				
		Analysis Time..: 18:28				
Chromium	ND	1.0	mg/kg	SW846 6010B	08/29-08/30/01	EJL391AF
		Dilution Factor: 1				
		Analysis Time..: 18:28				
Lead	ND	0.80	mg/kg	SW846 6010B	08/29-08/30/01	EJL391C0
		Dilution Factor: 1				
		Analysis Time..: 18:28				
Selenium	ND	1.3	mg/kg	SW846 6010B	08/29-08/30/01	EJL391C1
		Dilution Factor: 1				
		Analysis Time..: 18:28				
Silver	ND	1.0	mg/kg	SW846 6010B	08/29-08/30/01	EJL391AR
		Dilution Factor: 1				
		Analysis Time..: 18:28				
MB Lot-Sample #: D1H290000-416 **Prep Batch #...:** 1241416						
Mercury	ND	0.033	mg/kg	SW846 7471A	09/05-09/04/01	EJQ7T1AA
		Dilution Factor: 1				
		Analysis Time..: 23:20				

NOTE(S):

Calculations are performed before rounding to avoid round-off errors in calculated results.

LABORATORY CONTROL SAMPLE EVALUATION REPORT

TOTAL Metals

Lot-Sample #...: D1H220253 Matrix.....: SOLID

PARAMETER	PERCENT RECOVERY	RECOVERY LIMITS	RPD	RPD LIMITS	METHOD	PREPARATION-ANALYSIS DATE	PREP-BATCH #
Arsenic	99	(87 - 107)			SW846 6010B	08/29-08/30/01	1239374
	100	(87 - 107)	1.3	(0-20)	SW846 6010B	08/29-08/30/01	1239374
		Dilution Factor: 1					
Barium	99	(86 - 114)			SW846 6010B	08/29-08/30/01	1239374
	99	(86 - 114)	0.45	(0-20)	SW846 6010B	08/29-08/30/01	1239374
		Dilution Factor: 1					
Cadmium	98	(89 - 109)			SW846 6010B	08/29-08/30/01	1239374
	99	(89 - 109)	1.6	(0-20)	SW846 6010B	08/29-08/30/01	1239374
		Dilution Factor: 1					
Chromium	102	(88 - 110)			SW846 6010B	08/29-08/30/01	1239374
	103	(88 - 110)	1.3	(0-20)	SW846 6010B	08/29-08/30/01	1239374
		Dilution Factor: 1					
Lead	98	(88 - 108)			SW846 6010B	08/29-08/30/01	1239374
	100	(88 - 108)	1.6	(0-20)	SW846 6010B	08/29-08/30/01	1239374
		Dilution Factor: 1					
Selenium	97	(86 - 107)			SW846 6010B	08/29-08/30/01	1239374
	99	(86 - 107)	1.4	(0-20)	SW846 6010B	08/29-08/30/01	1239374
		Dilution Factor: 1					
Silver	98	(88 - 108)			SW846 6010B	08/29-08/30/01	1239374
	98	(88 - 108)	0.14	(0-20)	SW846 6010B	08/29-08/30/01	1239374
		Dilution Factor: 1					
Mercury	101	(82 - 113)			SW846 7471A	09/05/01	1241416
	100	(82 - 113)	1.2	(0-20)	SW846 7471A	09/05/01	1241416
		Dilution Factor: 1					

NOTE(S):

Calculations are performed before rounding to avoid round-off errors in calculated results.

LABORATORY CONTROL SAMPLE DATA REPORT

TOTAL Metals

Lot-Sample #...: D1H220253 Matrix.....: SOLID

PARAMETER	SPIKE AMOUNT	MEASURED AMOUNT	UNITS	PERCNT RECVRY	RPD	METHOD	PREPARATION-ANALYSIS DATE	PREP BATCH #
Arsenic	200	198	mg/kg	99		SW846 6010B	08/29-08/30/01	1239374
	200	200	mg/kg	100	1.3	SW846 6010B	08/29-08/30/01	1239374
			Dilution Factor: 1					
Barium	200	198	mg/kg	99		SW846 6010B	08/29-08/30/01	1239374
	200	199	mg/kg	99	0.45	SW846 6010B	08/29-08/30/01	1239374
			Dilution Factor: 1					
Cadmium	5.00	4.88	mg/kg	98		SW846 6010B	08/29-08/30/01	1239374
	5.00	4.96	mg/kg	99	1.6	SW846 6010B	08/29-08/30/01	1239374
			Dilution Factor: 1					
Chromium	20.0	20.3	mg/kg	102		SW846 6010B	08/29-08/30/01	1239374
	20.0	20.6	mg/kg	103	1.3	SW846 6010B	08/29-08/30/01	1239374
			Dilution Factor: 1					
Lead	50.0	49.0	mg/kg	98		SW846 6010B	08/29-08/30/01	1239374
	50.0	49.8	mg/kg	100	1.6	SW846 6010B	08/29-08/30/01	1239374
			Dilution Factor: 1					
Selenium	200	194	mg/kg	97		SW846 6010B	08/29-08/30/01	1239374
	200	197	mg/kg	99	1.4	SW846 6010B	08/29-08/30/01	1239374
			Dilution Factor: 1					
Silver	5.00	4.89	mg/kg	98		SW846 6010B	08/29-08/30/01	1239374
	5.00	4.89	mg/kg	98	0.14	SW846 6010B	08/29-08/30/01	1239374
			Dilution Factor: 1					
Mercury	0.417	0.422	mg/kg	101		SW846 7471A	09/05/01	1241416
	0.417	0.417	mg/kg	100	1.2	SW846 7471A	09/05/01	1241416
			Dilution Factor: 1					

NOTE(S):

Calculations are performed before rounding to avoid round-off errors in calculated results.

MATRIX SPIKE SAMPLE EVALUATION REPORT

TOTAL Metals

Client Lot #...: D1H220253 Matrix.....: SOLID
Date Sampled...: 08/16/01 13:00 Date Received..: 08/20/01

PARAMETER	PERCENT RECOVERY	RECOVERY LIMITS	RPD	RPD LIMITS	METHOD	PREPARATION-ANALYSIS DATE	WORK ORDER #
MS Lot-Sample #: D1H200161-005 **Prep Batch #...:** 1239374							
Arsenic	101	(87 - 107)			SW846 6010B	08/29-08/30/01	EH8041DF
	99	(87 - 107)	1.8	(0-20)	SW846 6010B	08/29-08/30/01	EH8041DG
		Dilution Factor: 1					
		Analysis Time..: 19:40					
Barium	101	(86 - 114)			SW846 6010B	08/29-08/30/01	EH8041CE
	104	(86 - 114)	2.0	(0-20)	SW846 6010B	08/29-08/30/01	EH8041CF
		Dilution Factor: 1					
		Analysis Time..: 19:40					
Cadmium	97	(89 - 109)			SW846 6010B	08/29-08/30/01	EH8041DJ
	96	(89 - 109)	1.5	(0-20)	SW846 6010B	08/29-08/30/01	EH8041DK
		Dilution Factor: 1					
		Analysis Time..: 19:40					
Chromium	108	(88 - 110)			SW846 6010B	08/29-08/30/01	EH8041CL
	105	(88 - 110)	2.0	(0-20)	SW846 6010B	08/29-08/30/01	EH8041CM
		Dilution Factor: 1					
		Analysis Time..: 19:40					
Lead	99	(88 - 108)			SW846 6010B	08/29-08/30/01	EH8041DM
	98	(88 - 108)	1.7	(0-20)	SW846 6010B	08/29-08/30/01	EH8041DN
		Dilution Factor: 1					
		Analysis Time..: 19:40					
Selenium	99	(86 - 107)			SW846 6010B	08/29-08/30/01	EH8041DQ
	98	(86 - 107)	0.56	(0-20)	SW846 6010B	08/29-08/30/01	EH8041DR
		Dilution Factor: 1					
		Analysis Time..: 19:40					
Silver	97	(88 - 108)			SW846 6010B	08/29-08/30/01	EH8041C9
	97	(88 - 108)	0.59	(0-20)	SW846 6010B	08/29-08/30/01	EH8041DA
		Dilution Factor: 1					
		Analysis Time..: 19:40					
MS Lot-Sample #: D1H200161-005 **Prep Batch #...:** 1241416							
Mercury	91	(82 - 113)			SW846 7471A	09/05/01	EH8041DT
	93	(82 - 113)	1.9	(0-20)	SW846 7471A	09/05/01	EH8041DU
		Dilution Factor: 1					
		Analysis Time..: 12:17					

NOTE(S):

Calculations are performed before rounding to avoid round-off errors in calculated results.

Results and reporting limits have been adjusted for dry weight.

MATRIX SPIKE SAMPLE DATA REPORT

TOTAL Metals

Client Lot #...: D1H220253 **Matrix.....:** SOLID
Date Sampled...: 08/16/01 13:00 **Date Received..:** 08/20/01

PARAMETER	SAMPLE AMOUNT	SPIKE AMT	MEASURED AMOUNT	UNITS	PERCNT RECVRY	RPD	METHOD	PREPARATION-ANALYSIS DATE	WORK ORDER #
MS Lot-Sample #: D1H200161-005 **Prep Batch #...:** 1239374									
Arsenic									
	1.3	231	235	mg/kg	101		SW846 6010B	08/29-08/30/01	EH8041DF
	1.3	231	231	mg/kg	99	1.8	SW846 6010B	08/29-08/30/01	EH8041DG
				Dilution Factor: 1					
				Analysis Time..: 19:40					
Barium									
	49.4	231	283	mg/kg	101		SW846 6010B	08/29-08/30/01	EH8041CE
	49.4	231	289	mg/kg	104	2.0	SW846 6010B	08/29-08/30/01	EH8041CF
				Dilution Factor: 1					
				Analysis Time..: 19:40					
Cadmium									
	ND	5.78	5.61	mg/kg	97		SW846 6010B	08/29-08/30/01	EH8041DJ
	ND	5.78	5.53	mg/kg	96	1.5	SW846 6010B	08/29-08/30/01	EH8041DK
				Dilution Factor: 1					
				Analysis Time..: 19:40					
Chromium									
	6.4	23.1	31.4	mg/kg	108		SW846 6010B	08/29-08/30/01	EH8041CL
	6.4	23.1	30.7	mg/kg	105	2.0	SW846 6010B	08/29-08/30/01	EH8041CM
				Dilution Factor: 1					
				Analysis Time..: 19:40					
Lead									
	4.6	57.8	62.0	mg/kg	99		SW846 6010B	08/29-08/30/01	EH8041DM
	4.6	57.8	60.9	mg/kg	98	1.7	SW846 6010B	08/29-08/30/01	EH8041DN
				Dilution Factor: 1					
				Analysis Time..: 19:40					
Selenium									
	ND	231	229	mg/kg	99		SW846 6010B	08/29-08/30/01	EH8041DQ
	ND	231	227	mg/kg	98	0.56	SW846 6010B	08/29-08/30/01	EH8041DR
				Dilution Factor: 1					
				Analysis Time..: 19:40					
Silver									
	ND	5.78	5.62	mg/kg	97		SW846 6010B	08/29-08/30/01	EH8041C9
	ND	5.78	5.59	mg/kg	97	0.59	SW846 6010B	08/29-08/30/01	EH8041DA
				Dilution Factor: 1					
				Analysis Time..: 19:40					

MS Lot-Sample #: D1H200161-005 **Prep Batch #...:** 1241416

(Continued on next page)

MATRIX SPIKE SAMPLE DATA REPORT

TOTAL Metals

Client Lot #...: D1H220253 Matrix.....: SOLID
Date Sampled...: 08/16/01 13:00 Date Received..: 08/20/01

PARAMETER	SAMPLE AMOUNT	SPIKE AMT	MEASURED AMOUNT	UNITS	PERCNT RECVRY	RPD	METHOD	PREPARATION-ANALYSIS DATE	WORK ORDER #
Mercury									
	0.0082	0.481	0.448	mg/kg	91		SW846 7471A	09/05/01	EH8041DT
	0.0082	0.481	0.456	mg/kg	93	1.9	SW846 7471A	09/05/01	EH8041DU

Dilution Factor: 1
Analysis Time..: 12:17

NOTE(S):

Calculations are performed before rounding to avoid round-off errors in calculated results.

Results and reporting limits have been adjusted for dry weight.

SAMPLE DUPLICATE EVALUATION REPORT

General Chemistry

Client Lot #...: D1H220253 Work Order #...: EJR5K-SMP Matrix.....: SOLID
EJR5K-DUP

Date Sampled...: 08/29/01 13:30 Date Received..: 08/30/01

% Moisture.....: 1.4 Dilution Factor: Initial Wgt/Vol:

PARAM	RESULT	DUPLICATE RESULT	UNITS	RPD	RPD LIMIT	METHOD	PREPARATION-ANALYSIS DATE	PREP BATCH #
Percent Moisture						SD Lot-Sample #:	D1H300129-020	
	1.4	1.2	%	13	(0-20)	MCAWW 160.3 MOD	08/30/01	1243217

Dilution Factor: 1 Analysis Time..: 16:00

Chai of
Custody Record

STL Denver
4955 Yarrow Street
Arvada, CO 80002

Dill
JB
8/22

SEVERN TRENT SERVICES

Severn Trent Laboratories, Inc.

STL-4124 (0700) DEN (0900)

Client	Project Manager	Date	Chain of Custody Number
URS	MIKE WAGNER	8/20-21/01	043693

Address	Telephone Number (Area Code)/Fax Number	Lab Number	Page 1 of 1
36 E. 7th Street - Suite 2300	513-651-3440		

City	State	Zip Code	Site Contact	Lab Contact
CINCINNATI	OH	45202		LYNN BANKERS

Project Name and Location (State)	Carrier/Waybill Number
JCI - Fowlerville, MI	FED EX 827728089288

Contract/Purchase Order/Quote No.

Analysis (Attach list if more space is needed)

Sample I.D. No. and Description (Containers for each sample may be combined on one line)	Date	Time	Matrix: Air	Aqueous	Sed.	Soil	Containers & Preservatives: Unpres.	H2SO4	HNOS	HCl	NaOH	ZnAc/NaOH	VOC	PAH	PCB	RCRA METALS	Special Instructions/ Conditions of Receipt
S-18" Pipe	8/20/01	1215			X								X				4 oz. - MAY BE HIGH
S-18" Pipe	8/20/01	1215			X									X	X		
S-18" Pipe	8/20/01	1215			X											X	
E-TP-2 (4')	8/21/01	0920				X							X				
E-TP-2 (4')	8/21/01	0920				X								X	X		
E-TP-2 (4')	8/21/01	0920				X										X	
B-TP-3 (4')	8/21/01	1055				X							X				
B-TP-3 (4')	8/21/01	1055				X								X	X		
B-TP-3 (4')	8/21/01	1055				X										X	
B-TP-3	8/21/01	1045				X							X				
B-TP-3	8/21/01	1045				X								X	X		
B-TP-3	8/21/01	1045				X										X	

Possible Hazard Identification TRIP BLANK
☒ Non-Hazard ☐ Flammable ☐ Skin Irritant ☐ Poison B ☐ Unknown

Sample Disposal
☐ Return To Client ☐ Disposal By Lab ☐ Archive For 2 Months (A fee may be assessed if samples are retained longer than 3 months)

Turn Around Time Required
☐ 24 Hours ☐ 48 Hours ☐ 7 Days ☐ 14 Days ☒ 21 Days ☐ Other

QC Requirements (Specify)

	Date	Time		Date	Time
1. Relinquished By: Richard J. Hajer	8/21/01	1730	1. Received By: [signature]	8/22/01	830
2. Relinquished By			2. Received By		
3. Relinquished By			3. Received By		

Comments

DISTRIBUTION: WHITE - Stays with the Sample; CANARY - Returned to Client with Report; PINK - Field Copy

APPENDIX C

LABORATORY REPORTS
WASTE DISPOSAL

Pace Analytical™
www.pacelabs.com

Pace Analytical Services, Inc.
7726 Moller Road
Indianapolis, IN 46268
Phone: 317.875.5894
Fax: 317.872.6189

August 31, 2001

Ms. Caroline Panico
ENTACT
1360 N. Wood Dale Rd.
Suite A
Wood Dale, IL 60191

RE: Lab Project Number: 5016181
Client Project ID: JCI/Former Stanley Tools

Dear Ms. Panico:

Enclosed are the analytical results for sample(s)received by the laboratory on August 20, 2001. If you have any questions concerning this report, please feel free to contact me.

Sincerely,

Jill Kofoed

Jill Kofoed
Project Manager

Enclosures

REPORT OF LABORATORY ANALYSIS

This report shall not be reproduced, except in full,
without the written consent of Pace Analytical Services, Inc.

Pace Analytical™
www.pacelabs.com

Pace Analytical Services, Inc.
7726 Moller Road
Indianapolis, IN 46268
Phone: 317.875.5894
Fax: 317.872.6189

ENTACT
1360 N. Wood Dale Rd.
Suite A
Wood Dale, IL 60191

Lab Project Number: 5016181
Client Project ID: JCI/Former Stanley Tools

Attn: Ms. Caroline Panico
Phone: 630-616-2100

Solid results are reported on a wet weight basis

Lab Sample No: 501203525 | Project Sample Number: 5016181-001 | Date Collected: 08/18/01 09:00
Client Sample ID: WCS-001WP | Matrix: Soil | Date Received: 08/20/01 11:45

Parameters	Results	Units	Report Limit	Analyzed		CAS No.	Ftnote	Reg Limit
Metals								
RCRA Metals, ICP, TCLP Leach.	Prep/Method: EPA 3010 / EPA 6010							
Arsenic	ND	mg/l	0.0500	08/24/01 16:45	HEB	7440-38-2		
Barium	0.629	mg/l	0.100	08/24/01 16:45	HEB	7440-39-3		
Cadmium	ND	mg/l	0.0100	08/24/01 16:45	HEB	7440-43-9		
Chromium	ND	mg/l	0.0500	08/24/01 16:45	HEB	7440-47-3		
Lead	ND	mg/l	0.0100	08/24/01 16:45	HEB	7439-92-1		
Selenium	ND	mg/l	0.0100	08/24/01 16:45	HEB	7782-49-2		
Silver	ND	mg/l	0.0500	08/24/01 16:45	HEB	7440-22-4		
Date Digested				08/22/01				
Mercury, CVAAS, TCLP Leachate	Prep/Method: EPA 1311 / EPA 7470							
Date Digested				08/21/01				
Mercury, CVAAS, TCLP Leachate	Prep/Method: EPA 7470 / EPA 7470							
Mercury	ND	ug/l	2.00	08/24/01 19:55	HEB	7439-97-6		
Wet Chemistry								
Flash Point, Closed Cup	Prep/Method: EPA 1010 / EPA 1010							
Flash Point	>180	deg F		08/24/01	FRW			
Total Percent Solids	Prep/Method: EPA 160.4 / EPA 160.4							
Percent Solids	84.5	%		08/21/01 11:20	KSR			
Sulfide, Soil	Prep/Method: EPA 376.1 / EPA 376.1							
Sulfide	ND	mg/kg	100.	08/24/01 09:00	KSR			
Cyanide, Total, Soil	Prep/Method: EPA 9012 / EPA 9012							

Date: 08/31/01

REPORT OF LABORATORY ANALYSIS

This report shall not be reproduced, except in full,
without the written consent of Pace Analytical Services, Inc.

Pace Analytical™
www.pacelabs.com

Pace Analytical Services, Inc.
7726 Moller Road
Indianapolis, IN 46268
Phone: 317.875.5894
Fax: 317.872.6189

Lab Project Number: 5016181
Client Project ID: JCI/Former Stanley Tools

Lab Sample No: 501203525 | Project Sample Number: 5016181-001 | Date Collected: 08/18/01 09:00
Client Sample ID: WCS-001WP | Matrix: Soil | Date Received: 08/20/01 11:45

Parameters	Results	Units	Report Limit	Analyzed		CAS No.	Ftnote	Reg Limit
Cyanide	ND	mg/kg	10.0	08/27/01 10:39	FRW	57-12-5		
pH, Soil	Prep/Method: EPA 9045 / EPA 9045							
pH	7.84			08/24/01 15:00	KSR			
GC/MS Semivolatiles								
Semivolatile Organics	Prep/Method: EPA 3550 Sonication / EPA 8270							
Naphthalene	ND	ug/kg	330	08/28/01 18:58	SRS	91-20-3		
Acenaphthylene	ND	ug/kg	330	08/28/01 18:58	SRS	208-96-8		
Acenaphthene	ND	ug/kg	330	08/28/01 18:58	SRS	83-32-9		
Fluorene	ND	ug/kg	330	08/28/01 18:58	SRS	86-73-7		
Phenanthrene	ND	ug/kg	330	08/28/01 18:58	SRS	85-01-8		
Anthracene	ND	ug/kg	330	08/28/01 18:58	SRS	120-12-7		
Fluoranthene	ND	ug/kg	330	08/28/01 18:58	SRS	206-44-0		
Pyrene	ND	ug/kg	330	08/28/01 18:58	SRS	129-00-0		
Benzo(a)anthracene	ND	ug/kg	330	08/28/01 18:58	SRS	56-55-3		
Chrysene	ND	ug/kg	330	08/28/01 18:58	SRS	218-01-9		
Benzo(b)fluoranthene	ND	ug/kg	330	08/28/01 18:58	SRS	205-99-2		
Benzo(k)fluoranthene	ND	ug/kg	330	08/28/01 18:58	SRS	207-08-9		
Benzo(a)pyrene	ND	ug/kg	330	08/28/01 18:58	SRS	50-32-8		
Indeno(1,2,3-cd)pyrene	ND	ug/kg	330	08/28/01 18:58	SRS	193-39-5		
Benzo(g,h,i)perylene	ND	ug/kg	330	08/28/01 18:58	SRS	191-24-2		
Dibenz(a,h)anthracene	ND	ug/kg	330	08/28/01 18:58	SRS	53-70-3		
2-Methylnaphthalene	ND	ug/kg	330	08/28/01 18:58	SRS	91-57-6		
Nitrobenzene-d5 (S)	76	%		08/28/01 18:58	SRS	4165-60-0		
2-Fluorobiphenyl (S)	73	%		08/28/01 18:58	SRS	321-60-8		
Terphenyl-d14 (S)	82	%		08/28/01 18:58	SRS	1718-51-0		
Date Extracted				08/27/01				
Semivolatile Organics, TCLP	Prep/Method: EPA 3510 / EPA 8270							
1,4-Dichlorobenzene	ND	ug/l	100	08/24/01 15:28	SRS	106-46-7		
2-Methylphenol (o-Cresol)	ND	ug/l	100	08/24/01 15:28	SRS	95-48-7		
3&4-Methylphenol	ND	ug/l	200	08/24/01 15:28	SRS			
Nitrobenzene	ND	ug/l	100	08/24/01 15:28	SRS	98-95-3		
Hexachloro-1,3-butadiene	ND	ug/l	100	08/24/01 15:28	SRS	87-68-3		
2,4,6-Trichlorophenol	ND	ug/l	100	08/24/01 15:28	SRS	88-06-2		
2,4,5-Trichlorophenol	ND	ug/l	500	08/24/01 15:28	SRS	95-95-4		

REPORT OF LABORATORY ANALYSIS

This report shall not be reproduced, except in full,
without the written consent of Pace Analytical Services, Inc.

Pace Analytical
www.pacelabs.com

Pace Analytical Services, Inc.
7726 Moller Road
Indianapolis, IN 46268
Phone: 317.875.5894
Fax: 317.872.6189

Lab Project Number: 5016181
Client Project ID: JCI/Former Stanley Tools

Lab Sample No: 501203525 | Project Sample Number: 5016181-001 | Date Collected: 08/18/01 09:00
Client Sample ID: WCS-001WP | Matrix: Soil | Date Received: 08/20/01 11:45

Parameters	Results	Units	Report Limit	Analyzed		CAS No.	Ftnote	Reg Limit
2,4-Dinitrotoluene	ND	ug/l	100	08/24/01 15:28	SRS	121-14-2		
Hexachlorobenzene	ND	ug/l	100	08/24/01 15:28	SRS	118-74-1		
Pentachlorophenol	ND	ug/l	500	08/24/01 15:28	SRS	87-86-5		
Pyridine	ND	ug/l	100	08/24/01 15:28	SRS	110-86-1		
Hexachloroethane	ND	ug/l	100	08/24/01 15:28	SRS	67-72-1		
Nitrobenzene-d5 (S)	73	%		08/24/01 15:28	SRS	4165-60-0		
2-Fluorobiphenyl (S)	69	%		08/24/01 15:28	SRS	321-60-8		
Terphenyl-d14 (S)	89	%		08/24/01 15:28	SRS	1718-51-0		
Phenol-d6 (S)	15	%		08/24/01 15:28	SRS	13127-88-3		
2-Fluorophenol (S)	19	%		08/24/01 15:28	SRS	367-12-4		
2,4,6-Tribromophenol (S)	63	%		08/24/01 15:28	SRS			
Date Extracted				08/23/01				
GC Semivolatiles								
PCBs in Soil by 8082	Prep/Method: EPA 3550 / EPA 8082							
PCB-1016 (Aroclor 1016)	ND	ug/kg	66.	08/24/01 17:25	MED	12674-11-2		
PCB-1221 (Aroclor 1221)	ND	ug/kg	66.	08/24/01 17:25	MED	11104-28-2		
PCB-1232 (Aroclor 1232)	ND	ug/kg	66.	08/24/01 17:25	MED	11141-16-5		
PCB-1242 (Aroclor 1242)	ND	ug/kg	66.	08/24/01 17:25	MED	53469-21-9		
PCB-1248 (Aroclor 1248)	210	ug/kg	66.	08/24/01 17:25	MED	12672-29-6		
PCB-1254 (Aroclor 1254)	ND	ug/kg	66.	08/24/01 17:25	MED	11097-69-1		
PCB-1260 (Aroclor 1260)	ND	ug/kg	66.	08/24/01 17:25	MED	11096-82-5		
Decachlorobiphenyl (S)	36	%		08/24/01 17:25	MED	2051-24-3		
Tetrachloro-m-xylene (S)	104	%		08/24/01 17:25	MED	877-09-8		
Date Extracted				08/21/01				
GC/MS Volatiles								
Volatile Organics, TCLP Leach.	Prep/Method: EPA 8260 / EPA 8260							
Vinyl chloride	ND	ug/l	100	08/27/01 15:01	CAC	75-01-4		
1,1-Dichloroethene	ND	ug/l	50.	08/27/01 15:01	CAC	75-35-4		
Chloroform	ND	ug/l	200	08/27/01 15:01	CAC	67-66-3		
1,2-Dichloroethane	ND	ug/l	50.	08/27/01 15:01	CAC	107-06-2		
2-Butanone (MEK)	ND	ug/l	1000	08/27/01 15:01	CAC	78-93-3		
Carbon tetrachloride	ND	ug/l	50.	08/27/01 15:01	CAC	56-23-5		

REPORT OF LABORATORY ANALYSIS

This report shall not be reproduced, except in full,
without the written consent of Pace Analytical Services, Inc.

Pace Analytical™
www.pacelabs.com

Pace Analytical Services, Inc.
7726 Moller Road
Indianapolis, IN 46268
Phone: 317.875.5894
Fax: 317.872.6189

Lab Project Number: 5016181
Client Project ID: JCI/Former Stanley Tools

Lab Sample No: 501203525 | Project Sample Number: 5016181-001 | Date Collected: 08/18/01 09:00
Client Sample ID: WCS-001WP | Matrix: Soil | Date Received: 08/20/01 11:45

Parameters	Results	Units	Report Limit	Analyzed		CAS No.	Ftnote	Reg Limit
Trichloroethene	ND	ug/l	50.	08/27/01 15:01	CAC	79-01-6		
Benzene	ND	ug/l	50.	08/27/01 15:01	CAC	71-43-2		
Tetrachloroethene	ND	ug/l	50.	08/27/01 15:01	CAC	127-18-4		
Chlorobenzene	ND	ug/l	50.	08/27/01 15:01	CAC	108-90-7		
Dibromofluoromethane (S)	84	%		08/27/01 15:01	CAC			
Toluene-d8 (S)	101	%		08/27/01 15:01	CAC	2037-26-5		
4-Bromofluorobenzene (S)	100	%		08/27/01 15:01	CAC	460-00-4		

REPORT OF LABORATORY ANALYSIS

This report shall not be reproduced, except in full,
without the written consent of Pace Analytical Services, Inc.

Pace Analytical™
www.pacelabs.com

Pace Analytical Services, Inc.
7726 Moller Road
Indianapolis, IN 46268
Phone: 317.875.5894
Fax: 317.872.6189

Lab Project Number: 5016181
Client Project ID: JCI/Former Stanley Tools

Lab Sample No: 501203574 | Project Sample Number: 5016181-002 | Date Collected: 08/18/01 09:10
Client Sample ID: WCS-002 | Matrix: Soil | Date Received: 08/20/01 11:45

Parameters	Results	Units	Report Limit	Analyzed		CAS No.	Ftnote	Reg Limit
Metals								
RCRA Metals, ICP, TCLP Leach.	Prep/Method: EPA 3010 / EPA 6010							
Arsenic	ND	mg/l	0.0500	08/24/01 16:45	HEB	7440-38-2		
Barium	0.962	mg/l	0.100	08/24/01 16:45	HEB	7440-39-3		
Cadmium	ND	mg/l	0.0100	08/24/01 16:45	HEB	7440-43-9		
Chromium	ND	mg/l	0.0500	08/24/01 16:45	HEB	7440-47-3		
Lead	ND	mg/l	0.0100	08/24/01 16:45	HEB	7439-92-1		
Selenium	ND	mg/l	0.0100	08/24/01 16:45	HEB	7782-49-2		
Silver	ND	mg/l	0.0500	08/24/01 16:45	HEB	7440-22-4		
Date Digested				08/22/01				
Mercury, CVAAS, TCLP Leachate	Prep/Method: EPA 1311 / EPA 7470							
Date Digested				08/21/01				
Mercury, CVAAS, TCLP Leachate	Prep/Method: EPA 7470 / EPA 7470							
Mercury	ND	ug/l	2.00	08/24/01 19:55	HEB	7439-97-6		
GC/MS Semivolatiles								
Semivolatile Organics	Prep/Method: EPA 3550 Sonication / EPA 8270							
Naphthalene	ND	ug/kg	330	08/28/01 19:31	SRS	91-20-3		
Acenaphthylene	ND	ug/kg	330	08/28/01 19:31	SRS	208-96-8		
Acenaphthene	ND	ug/kg	330	08/28/01 19:31	SRS	83-32-9		
Fluorene	ND	ug/kg	330	08/28/01 19:31	SRS	86-73-7		
Phenanthrene	ND	ug/kg	330	08/28/01 19:31	SRS	85-01-8		
Anthracene	ND	ug/kg	330	08/28/01 19:31	SRS	120-12-7		
Fluoranthene	ND	ug/kg	330	08/28/01 19:31	SRS	206-44-0		
Pyrene	ND	ug/kg	330	08/28/01 19:31	SRS	129-00-0		
Benzo(a)anthracene	ND	ug/kg	330	08/28/01 19:31	SRS	56-55-3		
Chrysene	ND	ug/kg	330	08/28/01 19:31	SRS	218-01-9		
Benzo(b)fluoranthene	ND	ug/kg	330	08/28/01 19:31	SRS	205-99-2		
Benzo(k)fluoranthene	ND	ug/kg	330	08/28/01 19:31	SRS	207-08-9		

REPORT OF LABORATORY ANALYSIS

This report shall not be reproduced, except in full,
without the written consent of Pace Analytical Services, Inc.

Pace Analytical
www.pacelabs.com

Pace Analytical Services, Inc.
7726 Moller Road
Indianapolis, IN 46268
Phone: 317.875.5894
Fax: 317.872.6189

Lab Project Number: 5016181
Client Project ID: JCI/Former Stanley Tools

Lab Sample No: 501203574 | Project Sample Number: 5016181-002 | Date Collected: 08/18/01 09:10
Client Sample ID: WCS-002 | Matrix: Soil | Date Received: 08/20/01 11:45

Parameters	Results	Units	Report Limit	Analyzed		CAS No.	Ftnote	Reg Limit
Benzo(a)pyrene	ND	ug/kg	330	08/28/01 19:31	SRS	50-32-8		
Indeno(1,2,3-cd)pyrene	ND	ug/kg	330	08/28/01 19:31	SRS	193-39-5		
Benzo(g,h,i)perylene	ND	ug/kg	330	08/28/01 19:31	SRS	191-24-2		
Dibenz(a,h)anthracene	ND	ug/kg	330	08/28/01 19:31	SRS	53-70-3		
2-Methylnaphthalene	ND	ug/kg	330	08/28/01 19:31	SRS	91-57-6		
Nitrobenzene-d5 (S)	76	%		08/28/01 19:31	SRS	4165-60-0		
2-Fluorobiphenyl (S)	75	%		08/28/01 19:31	SRS	321-60-8		
Terphenyl-d14 (S)	81	%		08/28/01 19:31	SRS	1718-51-0		
Date Extracted				08/27/01				
Semivolatile Organics, TCLP	Prep/Method:	EPA 3510 / EPA 8270						
1,4-Dichlorobenzene	ND	ug/l	100	08/24/01 16:01	SRS	106-46-7		
2-Methylphenol (o-Cresol)	ND	ug/l	100	08/24/01 16:01	SRS	95-48-7		
3&4-Methylphenol	ND	ug/l	200	08/24/01 16:01	SRS			
Nitrobenzene	ND	ug/l	100	08/24/01 16:01	SRS	98-95-3		
Hexachloro-1,3-butadiene	ND	ug/l	100	08/24/01 16:01	SRS	87-68-3		
2,4,6-Trichlorophenol	ND	ug/l	100	08/24/01 16:01	SRS	88-06-2		
2,4,5-Trichlorophenol	ND	ug/l	500	08/24/01 16:01	SRS	95-95-4		
2,4-Dinitrotoluene	ND	ug/l	100	08/24/01 16:01	SRS	121-14-2		
Hexachlorobenzene	ND	ug/l	100	08/24/01 16:01	SRS	118-74-1		
Pentachlorophenol	ND	ug/l	500	08/24/01 16:01	SRS	87-86-5		
Pyridine	ND	ug/l	100	08/24/01 16:01	SRS	110-86-1		
Hexachloroethane	ND	ug/l	100	08/24/01 16:01	SRS	67-72-1		
Nitrobenzene-d5 (S)	71	%		08/24/01 16:01	SRS	4165-60-0		
2-Fluorobiphenyl (S)	65	%		08/24/01 16:01	SRS	321-60-8		
Terphenyl-d14 (S)	83	%		08/24/01 16:01	SRS	1718-51-0		
Phenol-d6 (S)	26	%		08/24/01 16:01	SRS	13127-88-3		
2-Fluorophenol (S)	35	%		08/24/01 16:01	SRS	367-12-4		
2,4,6-Tribromophenol (S)	77	%		08/24/01 16:01	SRS			
Date Extracted				08/23/01				
GC Semivolatiles								
PCBs in Soil by 8082	Prep/Method:	EPA 3550 / EPA 8082						
PCB-1016 (Aroclor 1016)	ND	ug/kg	66.	08/24/01 17:53	MED	12674-11-2		
PCB-1221 (Aroclor 1221)	ND	ug/kg	66.	08/24/01 17:53	MED	11104-28-2		
PCB-1232 (Aroclor 1232)	ND	ug/kg	66.	08/24/01 17:53	MED	11141-16-5		
PCB-1242 (Aroclor 1242)	ND	ug/kg	66.	08/24/01 17:53	MED	53469-21-9		

REPORT OF LABORATORY ANALYSIS

This report shall not be reproduced, except in full,
without the written consent of Pace Analytical Services, Inc.

Pace Analytical™
www.pacelabs.com

Pace Analytical Services, Inc.
7726 Moller Road
Indianapolis, IN 46268
Phone: 317.875.5894
Fax: 317.872.6189

Lab Project Number: 5016181
Client Project ID: JCI/Former Stanley Tools

Lab Sample No: 501203574 | Project Sample Number: 5016181-002 | Date Collected: 08/18/01 09:10
Client Sample ID: WCS-002 | Matrix: Soil | Date Received: 08/20/01 11:45

Parameters	Results	Units	Report Limit	Analyzed		CAS No.	Ftnote	Reg Limit
PCB-1248 (Aroclor 1248)	650	ug/kg	66.	08/24/01 17:53	MED	12672-29-6		
PCB-1254 (Aroclor 1254)	ND	ug/kg	66.	08/24/01 17:53	MED	11097-69-1		
PCB-1260 (Aroclor 1260)	ND	ug/kg	66.	08/24/01 17:53	MED	11096-82-5		
Decachlorobiphenyl (S)	34	%		08/24/01 17:53	MED	2051-24-3		
Tetrachloro-m-xylene (S)	110	%		08/24/01 17:53	MED	877-09-8		
Date Extracted				08/21/01				
GC/MS Volatiles								
Volatile Organics, TCLP Leach.	Prep/Method: EPA 8260 / EPA 8260							
Vinyl chloride	ND	ug/l	100	08/27/01 10:14	CAC	75-01-4		
1,1-Dichloroethene	ND	ug/l	50.	08/27/01 10:14	CAC	75-35-4		
Chloroform	ND	ug/l	200	08/27/01 10:14	CAC	67-66-3		
1,2-Dichloroethane	ND	ug/l	50.	08/27/01 10:14	CAC	107-06-2		
2-Butanone (MEK)	ND	ug/l	1000	08/27/01 10:14	CAC	78-93-3		
Carbon tetrachloride	ND	ug/l	50.	08/27/01 10:14	CAC	56-23-5		
Trichloroethene	ND	ug/l	50.	08/27/01 10:14	CAC	79-01-6		
Benzene	ND	ug/l	50.	08/27/01 10:14	CAC	71-43-2		
Tetrachloroethene	ND	ug/l	50.	08/27/01 10:14	CAC	127-18-4		
Chlorobenzene	ND	ug/l	50.	08/27/01 10:14	CAC	108-90-7		
Dibromofluoromethane (S)	83	%		08/27/01 10:14	CAC			
Toluene-d8 (S)	105	%		08/27/01 10:14	CAC	2037-26-5		
4-Bromofluorobenzene (S)	110	%		08/27/01 10:14	CAC	460-00-4		

REPORT OF LABORATORY ANALYSIS

This report shall not be reproduced, except in full,
without the written consent of Pace Analytical Services, Inc.

Pace Analytical
www.pacelabs.com

Pace Analytical Services, Inc.
7726 Moller Road
Indianapolis, IN 46268
Phone: 317.875.5894
Fax: 317.872.6189

Lab Project Number: 5016181
Client Project ID: JCI/Former Stanley Tools

Lab Sample No: 501203624 | Project Sample Number: 5016181-003 | Date Collected: 08/18/01 09:15
Client Sample ID: WCS-003 | Matrix: Soil | Date Received: 08/20/01 11:45

Parameters	Results	Units	Report Limit	Analyzed		CAS No.	Ftnote	Reg Limit
Metals								
RCRA Metals, ICP, TCLP Leach.	Prep/Method: EPA 3010 / EPA 6010							
Arsenic	ND	mg/l	0.0500	08/24/01 16:45	HEB	7440-38-2		
Barium	0.630	mg/l	0.100	08/24/01 16:45	HEB	7440-39-3		
Cadmium	ND	mg/l	0.0100	08/24/01 16:45	HEB	7440-43-9		
Chromium	ND	mg/l	0.0500	08/24/01 16:45	HEB	7440-47-3		
Lead	ND	mg/l	0.0100	08/24/01 16:45	HEB	7439-92-1		
Selenium	ND	mg/l	0.0100	08/24/01 16:45	HEB	7782-49-2		
Silver	ND	mg/l	0.0500	08/24/01 16:45	HEB	7440-22-4		
Date Digested				08/22/01				
Mercury, CVAAS, TCLP Leachate	Prep/Method: EPA 1311 / EPA 7470							
Date Digested				08/21/01				
Mercury, CVAAS, TCLP Leachate	Prep/Method: EPA 7470 / EPA 7470							
Mercury	ND	ug/l	2.00	08/24/01 19:55	HEB	7439-97-6		
GC/MS Semivolatiles								
Semivolatile Organics	Prep/Method: EPA 3550 Sonication / EPA 8270							
Naphthalene	ND	ug/kg	330	08/28/01 22:45	SRS	91-20-3		
Acenaphthylene	ND	ug/kg	330	08/28/01 22:45	SRS	208-96-8		
Acenaphthene	ND	ug/kg	330	08/28/01 22:45	SRS	83-32-9		
Fluorene	ND	ug/kg	330	08/28/01 22:45	SRS	86-73-7		
Phenanthrene	370	ug/kg	330	08/28/01 22:45	SRS	85-01-8		
Anthracene	ND	ug/kg	330	08/28/01 22:45	SRS	120-12-7		
Fluoranthene	550	ug/kg	330	08/28/01 22:45	SRS	206-44-0		
Pyrene	440	ug/kg	330	08/28/01 22:45	SRS	129-00-0		
Benzo(a)anthracene	ND	ug/kg	330	08/28/01 22:45	SRS	56-55-3		
Chrysene	ND	ug/kg	330	08/28/01 22:45	SRS	218-01-9		
Benzo(b)fluoranthene	ND	ug/kg	330	08/28/01 22:45	SRS	205-99-2		
Benzo(k)fluoranthene	ND	ug/kg	330	08/28/01 22:45	SRS	207-08-9		

REPORT OF LABORATORY ANALYSIS

This report shall not be reproduced, except in full,
without the written consent of Pace Analytical Services, Inc.

Pace Analytical™
www.pacelabs.com

Pace Analytical Services, Inc.
7726 Moller Road
Indianapolis, IN 46268
Phone: 317.875.5894
Fax: 317.872.6189

Lab Project Number: 5016181
Client Project ID: JCI/Former Stanley Tools

Lab Sample No: 501203624 | Project Sample Number: 5016181-003 | Date Collected: 08/18/01 09:15
Client Sample ID: WCS-003 | Matrix: Soil | Date Received: 08/20/01 11:45

Parameters	Results	Units	Report Limit	Analyzed		CAS No.	Ftnote	Reg Limit
Benzo(a)pyrene	ND	ug/kg	330	08/28/01 22:45	SRS	50-32-8		
Indeno(1,2,3-cd)pyrene	ND	ug/kg	330	08/28/01 22:45	SRS	193-39-5		
Benzo(g,h,i)perylene	ND	ug/kg	330	08/28/01 22:45	SRS	191-24-2		
Dibenz(a,h)anthracene	ND	ug/kg	330	08/28/01 22:45	SRS	53-70-3		
2-Methylnaphthalene	ND	ug/kg	330	08/28/01 22:45	SRS	91-57-6		
Nitrobenzene-d5 (S)	78	%		08/28/01 22:45	SRS	4165-60-0		
2-Fluorobiphenyl (S)	80	%		08/28/01 22:45	SRS	321-60-8		
Terphenyl-d14 (S)	80	%		08/28/01 22:45	SRS	1718-51-0		
Date Extracted				08/27/01				
Semivolatile Organics, TCLP	Prep/Method: EPA 3510 / EPA 8270							
1,4-Dichlorobenzene	ND	ug/l	100	08/24/01 16:33	SRS	106-46-7		
2-Methylphenol (o-Cresol)	ND	ug/l	100	08/24/01 16:33	SRS	95-48-7		
3&4-Methylphenol	ND	ug/l	200	08/24/01 16:33	SRS			
Nitrobenzene	ND	ug/l	100	08/24/01 16:33	SRS	98-95-3		
Hexachloro-1,3-butadiene	ND	ug/l	100	08/24/01 16:33	SRS	87-68-3		
2,4,6-Trichlorophenol	ND	ug/l	100	08/24/01 16:33	SRS	88-06-2		
2,4,5-Trichlorophenol	ND	ug/l	500	08/24/01 16:33	SRS	95-95-4		
2,4-Dinitrotoluene	ND	ug/l	100	08/24/01 16:33	SRS	121-14-2		
Hexachlorobenzene	ND	ug/l	100	08/24/01 16:33	SRS	118-74-1		
Pentachlorophenol	ND	ug/l	500	08/24/01 16:33	SRS	87-86-5		
Pyridine	ND	ug/l	100	08/24/01 16:33	SRS	110-86-1		
Hexachloroethane	ND	ug/l	100	08/24/01 16:33	SRS	67-72-1		
Nitrobenzene-d5 (S)	70	%		08/24/01 16:33	SRS	4165-60-0		
2-Fluorobiphenyl (S)	68	%		08/24/01 16:33	SRS	321-60-8		
Terphenyl-d14 (S)	95	%		08/24/01 16:33	SRS	1718-51-0		
Phenol-d6 (S)	28	%		08/24/01 16:33	SRS	13127-88-3		
2-Fluorophenol (S)	38	%		08/24/01 16:33	SRS	367-12-4		
2,4,6-Tribromophenol (S)	83	%		08/24/01 16:33	SRS			
Date Extracted				08/23/01				
GC Semivolatiles								
PCBs in Soil by 8082	Prep/Method: EPA 3550 / EPA 8082							
PCB-1016 (Aroclor 1016)	ND	ug/kg	66.	08/24/01 18:21	MED	12674-11-2		
PCB-1221 (Aroclor 1221)	ND	ug/kg	66.	08/24/01 18:21	MED	11104-28-2		
PCB-1232 (Aroclor 1232)	ND	ug/kg	66.	08/24/01 18:21	MED	11141-16-5		
PCB-1242 (Aroclor 1242)	ND	ug/kg	66.	08/24/01 18:21	MED	53469-21-9		

Date: 08/31/01

REPORT OF LABORATORY ANALYSIS

This report shall not be reproduced, except in full,
without the written consent of Pace Analytical Services, Inc.

Pace Analytical™
www.pacelabs.com

Pace Analytical Services, Inc.
7726 Moller Road
Indianapolis, IN 46268
Phone: 317.875.5894
Fax: 317.872.6189

Lab Project Number: 5016181
Client Project ID: JCI/Former Stanley Tools

Lab Sample No: 501203624 | Project Sample Number: 5016181-003 | Date Collected: 08/18/01 09:15
Client Sample ID: WCS-003 | Matrix: Soil | Date Received: 08/20/01 11:45

Parameters	Results	Units	Report Limit	Analyzed		CAS No.	Ftnote	Reg Limit
PCB-1248 (Aroclor 1248)	410	ug/kg	66.	08/24/01 18:21	MED	12672-29-6		
PCB-1254 (Aroclor 1254)	ND	ug/kg	66.	08/24/01 18:21	MED	11097-69-1		
PCB-1260 (Aroclor 1260)	ND	ug/kg	66.	08/24/01 18:21	MED	11096-82-5		
Decachlorobiphenyl (S)	34	%		08/24/01 18:21	MED	2051-24-3		
Tetrachloro-m-xylene (S)	110	%		08/24/01 18:21	MED	877-09-8		
Date Extracted				08/21/01				
GC/MS Volatiles								
Volatile Organics, TCLP Leach.	Prep/Method: EPA 8260 / EPA 8260							
Vinyl chloride	ND	ug/l	100	08/27/01 13:25	CAC	75-01-4		
1,1-Dichloroethene	ND	ug/l	50.	08/27/01 13:25	CAC	75-35-4		
Chloroform	ND	ug/l	200	08/27/01 13:25	CAC	67-66-3		
1,2-Dichloroethane	ND	ug/l	50.	08/27/01 13:25	CAC	107-06-2		
2-Butanone (MEK)	ND	ug/l	1000	08/27/01 13:25	CAC	78-93-3		
Carbon tetrachloride	ND	ug/l	50.	08/27/01 13:25	CAC	56-23-5		
Trichloroethene	ND	ug/l	50.	08/27/01 13:25	CAC	79-01-6		
Benzene	ND	ug/l	50.	08/27/01 13:25	CAC	71-43-2		
Tetrachloroethene	ND	ug/l	50.	08/27/01 13:25	CAC	127-18-4		
Chlorobenzene	ND	ug/l	50.	08/27/01 13:25	CAC	108-90-7		
Dibromofluoromethane (S)	86	%		08/27/01 13:25	CAC			
Toluene-d8 (S)	99	%		08/27/01 13:25	CAC	2037-26-5		
4-Bromofluorobenzene (S)	97	%		08/27/01 13:25	CAC	460-00-4		

REPORT OF LABORATORY ANALYSIS

This report shall not be reproduced, except in full,
without the written consent of Pace Analytical Services, Inc.

Pace Analytical™
www.pacelabs.com

Pace Analytical Services, Inc.
7726 Moller Road
Indianapolis, IN 46268
Phone: 317.875.5894
Fax: 317.872.6189

Lab Project Number: 5016181
Client Project ID: JCI/Former Stanley Tools

Lab Sample No: 501203632 | Project Sample Number: 5016181-004 | Date Collected: 08/18/01 09:20
Client Sample ID: WCS-004 | Matrix: Soil | Date Received: 08/20/01 11:45

Parameters	Results	Units	Report Limit	Analyzed		CAS No.	Ftnote	Reg Limit
Metals								
RCRA Metals, ICP, TCLP Leach.	Prep/Method: EPA 3010 / EPA 6010							
Arsenic	ND	mg/l	0.0500	08/24/01 16:45	HEB	7440-38-2		
Barium	0.586	mg/l	0.100	08/24/01 16:45	HEB	7440-39-3		
Cadmium	ND	mg/l	0.0100	08/24/01 16:45	HEB	7440-43-9		
Chromium	0.0604	mg/l	0.0500	08/24/01 16:45	HEB	7440-47-3		
Lead	ND	mg/l	0.0100	08/24/01 16:45	HEB	7439-92-1		
Selenium	ND	mg/l	0.0100	08/24/01 16:45	HEB	7782-49-2		
Silver	ND	mg/l	0.0500	08/24/01 16:45	HEB	7440-22-4		
Date Digested				08/22/01				
Mercury, CVAAS, TCLP Leachate	Prep/Method: EPA 1311 / EPA 7470							
Date Digested				08/21/01				
Mercury, CVAAS, TCLP Leachate	Prep/Method: EPA 7470 / EPA 7470							
Mercury	ND	ug/l	2.00	08/24/01 19:55	HEB	7439-97-6		
GC/MS Semivolatiles								
Semivolatile Organics	Prep/Method: EPA 3550 Sonication / EPA 8270							
Naphthalene	ND	ug/kg	330	08/28/01 20:36	SRS	91-20-3		
Acenaphthylene	ND	ug/kg	330	08/28/01 20:36	SRS	208-96-8		
Acenaphthene	ND	ug/kg	330	08/28/01 20:36	SRS	83-32-9		
Fluorene	ND	ug/kg	330	08/28/01 20:36	SRS	86-73-7		
Phenanthrene	ND	ug/kg	330	08/28/01 20:36	SRS	85-01-8		
Anthracene	ND	ug/kg	330	08/28/01 20:36	SRS	120-12-7		
Fluoranthene	ND	ug/kg	330	08/28/01 20:36	SRS	206-44-0		
Pyrene	ND	ug/kg	330	08/28/01 20:36	SRS	129-00-0		
Benzo(a)anthracene	ND	ug/kg	330	08/28/01 20:36	SRS	56-55-3		
Chrysene	ND	ug/kg	330	08/28/01 20:36	SRS	218-01-9		
Benzo(b)fluoranthene	ND	ug/kg	330	08/28/01 20:36	SRS	205-99-2		
Benzo(k)fluoranthene	ND	ug/kg	330	08/28/01 20:36	SRS	207-08-9		

REPORT OF LABORATORY ANALYSIS

This report shall not be reproduced, except in full,
without the written consent of Pace Analytical Services, Inc.

Pace Analytical
www.pacelabs.com

Pace Analytical Services, Inc.
7726 Moller Road
Indianapolis, IN 46268
Phone: 317.875.5894
Fax: 317.872.6189

Lab Project Number: 5016181
Client Project ID: JCI/Former Stanley Tools

Lab Sample No: 501203632 | Project Sample Number: 5016181-004 | Date Collected: 08/18/01 09:20
Client Sample ID: WCS-004 | Matrix: Soil | Date Received: 08/20/01 11:45

Parameters	Results	Units	Report Limit	Analyzed		CAS No.	Ftnote	Reg Limit
Benzo(a)pyrene	ND	ug/kg	330	08/28/01 20:36	SRS	50-32-8		
Indeno(1,2,3-cd)pyrene	ND	ug/kg	330	08/28/01 20:36	SRS	193-39-5		
Benzo(g,h,i)perylene	ND	ug/kg	330	08/28/01 20:36	SRS	191-24-2		
Dibenz(a,h)anthracene	ND	ug/kg	330	08/28/01 20:36	SRS	53-70-3		
2-Methylnaphthalene	ND	ug/kg	330	08/28/01 20:36	SRS	91-57-6		
Nitrobenzene-d5 (S)	68	%		08/28/01 20:36	SRS	4165-60-0		
2-Fluorobiphenyl (S)	69	%		08/28/01 20:36	SRS	321-60-8		
Terphenyl-d14 (S)	71	%		08/28/01 20:36	SRS	1718-51-0		
Date Extracted				08/27/01				
Semivolatile Organics, TCLP	Prep/Method: EPA 3510 / EPA 8270							
1,4-Dichlorobenzene	ND	ug/l	100	08/24/01 17:06	SRS	106-46-7		
2-Methylphenol (o-Cresol)	ND	ug/l	100	08/24/01 17:06	SRS	95-48-7		
3&4-Methylphenol	ND	ug/l	200	08/24/01 17:06	SRS			
Nitrobenzene	ND	ug/l	100	08/24/01 17:06	SRS	98-95-3		
Hexachloro-1,3-butadiene	ND	ug/l	100	08/24/01 17:06	SRS	87-68-3		
2,4,6-Trichlorophenol	ND	ug/l	100	08/24/01 17:06	SRS	88-06-2		
2,4,5-Trichlorophenol	ND	ug/l	500	08/24/01 17:06	SRS	95-95-4		
2,4-Dinitrotoluene	ND	ug/l	100	08/24/01 17:06	SRS	121-14-2		
Hexachlorobenzene	ND	ug/l	100	08/24/01 17:06	SRS	118-74-1		
Pentachlorophenol	ND	ug/l	500	08/24/01 17:06	SRS	87-86-5		
Pyridine	ND	ug/l	100	08/24/01 17:06	SRS	110-86-1		
Hexachloroethane	ND	ug/l	100	08/24/01 17:06	SRS	67-72-1		
Nitrobenzene-d5 (S)	81	%		08/24/01 17:06	SRS	4165-60-0		
2-Fluorobiphenyl (S)	76	%		08/24/01 17:06	SRS	321-60-8		
Terphenyl-d14 (S)	93	%		08/24/01 17:06	SRS	1718-51-0		
Phenol-d6 (S)	32	%		08/24/01 17:06	SRS	13127-88-3		
2-Fluorophenol (S)	45	%		08/24/01 17:06	SRS	367-12-4		
2,4,6-Tribromophenol (S)	84	%		08/24/01 17:06	SRS			
Date Extracted				08/23/01				
GC Semivolatiles								
PCBs in Soil by 8082	Prep/Method: EPA 3550 / EPA 8082							
PCB-1016 (Aroclor 1016)	ND	ug/kg	66.	08/24/01 18:50	MED	12674-11-2		
PCB-1221 (Aroclor 1221)	ND	ug/kg	66.	08/24/01 18:50	MED	11104-28-2		
PCB-1232 (Aroclor 1232)	ND	ug/kg	66.	08/24/01 18:50	MED	11141-16-5		
PCB-1242 (Aroclor 1242)	ND	ug/kg	66.	08/24/01 18:50	MED	53469-21-9		

REPORT OF LABORATORY ANALYSIS

This report shall not be reproduced, except in full,
without the written consent of Pace Analytical Services, Inc.

Pace Analytical
www.pacelabs.com

Pace Analytical Services, Inc.
7726 Moller Road
Indianapolis, IN 46268
Phone: 317.875.5894
Fax: 317.872.6189

Lab Project Number: 5016181
Client Project ID: JCI/Former Stanley Tools

Lab Sample No: 501203632 | Project Sample Number: 5016181-004 | Date Collected: 08/18/01 09:20
Client Sample ID: WCS-004 | Matrix: Soil | Date Received: 08/20/01 11:45

Parameters	Results	Units	Report Limit	Analyzed		CAS No.	Ftnote	Reg Limit
PCB-1248 (Aroclor 1248)	160	ug/kg	66.	08/24/01 18:50	MED	12672-29-6		
PCB-1254 (Aroclor 1254)	ND	ug/kg	66.	08/24/01 18:50	MED	11097-69-1		
PCB-1260 (Aroclor 1260)	ND	ug/kg	66.	08/24/01 18:50	MED	11096-82-5		
Decachlorobiphenyl (S)	36	%		08/24/01 18:50	MED	2051-24-3		
Tetrachloro-m-xylene (S)	110	%		08/24/01 18:50	MED	877-09-8		
Date Extracted				08/21/01				
GC/MS Volatiles								
Volatile Organics, TCLP Leach.	Prep/Method:	EPA 8260 / EPA 8260						
Vinyl chloride	ND	ug/l	100	08/27/01 13:57	CAC	75-01-4		
1,1-Dichloroethene	ND	ug/l	50.	08/27/01 13:57	CAC	75-35-4		
Chloroform	ND	ug/l	200	08/27/01 13:57	CAC	67-66-3		
1,2-Dichloroethane	ND	ug/l	50.	08/27/01 13:57	CAC	107-06-2		
2-Butanone (MEK)	ND	ug/l	1000	08/27/01 13:57	CAC	78-93-3		
Carbon tetrachloride	ND	ug/l	50.	08/27/01 13:57	CAC	56-23-5		
Trichloroethene	ND	ug/l	50.	08/27/01 13:57	CAC	79-01-6		
Benzene	ND	ug/l	50.	08/27/01 13:57	CAC	71-43-2		
Tetrachloroethene	ND	ug/l	50.	08/27/01 13:57	CAC	127-18-4		
Chlorobenzene	ND	ug/l	50.	08/27/01 13:57	CAC	108-90-7		
Dibromofluoromethane (S)	87	%		08/27/01 13:57	CAC			
Toluene-d8 (S)	101	%		08/27/01 13:57	CAC	2037-26-5		
4-Bromofluorobenzene (S)	96	%		08/27/01 13:57	CAC	460-00-4		

REPORT OF LABORATORY ANALYSIS

This report shall not be reproduced, except in full,
without the written consent of Pace Analytical Services, Inc.

Pace Analytical™
www.pacelabs.com

Pace Analytical Services, Inc.
7726 Moller Road
Indianapolis, IN 46268
Phone: 317.875.5894
Fax: 317.872.6189

Lab Project Number: 5016181
Client Project ID: JCI/Former Stanley Tools

Lab Sample No: 501203640 | Project Sample Number: 5016181-005 | Date Collected: 08/18/01 09:25
Client Sample ID: WCS-005 | Matrix: Soil | Date Received: 08/20/01 11:45

Parameters	Results	Units	Report Limit	Analyzed		CAS No.	Ftnote	Reg Limit
Metals								
RCRA Metals, ICP, TCLP Leach.	Prep/Method: EPA 3010 / EPA 6010							
Arsenic	ND	mg/l	0.0500	08/24/01 16:45	HEB	7440-38-2		
Barium	0.565	mg/l	0.100	08/24/01 16:45	HEB	7440-39-3		
Cadmium	ND	mg/l	0.0100	08/24/01 16:45	HEB	7440-43-9		
Chromium	ND	mg/l	0.0500	08/24/01 16:45	HEB	7440-47-3		
Lead	ND	mg/l	0.0100	08/24/01 16:45	HEB	7439-92-1		
Selenium	ND	mg/l	0.0100	08/24/01 16:45	HEB	7782-49-2		
Silver	ND	mg/l	0.0500	08/24/01 16:45	HEB	7440-22-4		
Date Digested				08/22/01				
Mercury, CVAAS, TCLP Leachate	Prep/Method: EPA 1311 / EPA 7470							
Date Digested				08/21/01				
Mercury, CVAAS, TCLP Leachate	Prep/Method: EPA 7470 / EPA 7470							
Mercury	ND	ug/l	2.00	08/24/01 19:55	HEB	7439-97-6		
GC/MS Semivolatiles								
Semivolatile Organics	Prep/Method: EPA 3550 Sonication / EPA 8270							
Naphthalene	ND	ug/kg	330	08/28/01 17:53	SRS	91-20-3		
Acenaphthylene	ND	ug/kg	330	08/28/01 17:53	SRS	208-96-8		
Acenaphthene	ND	ug/kg	330	08/28/01 17:53	SRS	83-32-9		
Fluorene	ND	ug/kg	330	08/28/01 17:53	SRS	86-73-7		
Phenanthrene	ND	ug/kg	330	08/28/01 17:53	SRS	85-01-8		
Anthracene	ND	ug/kg	330	08/28/01 17:53	SRS	120-12-7		
Fluoranthene	ND	ug/kg	330	08/28/01 17:53	SRS	206-44-0		
Pyrene	ND	ug/kg	330	08/28/01 17:53	SRS	129-00-0		
Benzo(a)anthracene	ND	ug/kg	330	08/28/01 17:53	SRS	56-55-3		
Chrysene	ND	ug/kg	330	08/28/01 17:53	SRS	218-01-9		
Benzo(b)fluoranthene	ND	ug/kg	330	08/28/01 17:53	SRS	205-99-2		
Benzo(k)fluoranthene	ND	ug/kg	330	08/28/01 17:53	SRS	207-08-9		

REPORT OF LABORATORY ANALYSIS

This report shall not be reproduced, except in full,
without the written consent of Pace Analytical Services, Inc.

Pace Analytical™
www.pacelabs.com

Pace Analytical Services, Inc.
7726 Moller Road
Indianapolis, IN 46268
Phone: 317.875.5894
Fax: 317.872.6189

Lab Project Number: 5016181
Client Project ID: JCI/Former Stanley Tools

Lab Sample No: 501203640 | Project Sample Number: 5016181-005 | Date Collected: 08/18/01 09:25
Client Sample ID: WCS-005 | Matrix: Soil | Date Received: 08/20/01 11:45

Parameters	Results	Units	Report Limit	Analyzed		CAS No.	Ftnote	Reg Limit
Benzo(a)pyrene	ND	ug/kg	330	08/28/01 17:53	SRS	50-32-8		
Indeno(1,2,3-cd)pyrene	ND	ug/kg	330	08/28/01 17:53	SRS	193-39-5		
Benzo(g,h,i)perylene	ND	ug/kg	330	08/28/01 17:53	SRS	191-24-2		
Dibenz(a,h)anthracene	ND	ug/kg	330	08/28/01 17:53	SRS	53-70-3		
2-Methylnaphthalene	ND	ug/kg	330	08/28/01 17:53	SRS	91-57-6		
Nitrobenzene-d5 (S)	75	%		08/28/01 17:53	SRS	4165-60-0		
2-Fluorobiphenyl (S)	73	%		08/28/01 17:53	SRS	321-60-8		
Terphenyl-d14 (S)	80	%		08/28/01 17:53	SRS	1718-51-0		
Date Extracted				08/27/01				
Semivolatile Organics, TCLP	Prep/Method: EPA 3510 / EPA 8270							
1,4-Dichlorobenzene	ND	ug/l	100	08/24/01 17:38	SRS	106-46-7		
2-Methylphenol (o-Cresol)	ND	ug/l	100	08/24/01 17:38	SRS	95-48-7		
3&4-Methylphenol	ND	ug/l	200	08/24/01 17:38	SRS			
Nitrobenzene	ND	ug/l	100	08/24/01 17:38	SRS	98-95-3		
Hexachloro-1,3-butadiene	ND	ug/l	100	08/24/01 17:38	SRS	87-68-3		
2,4,6-Trichlorophenol	ND	ug/l	100	08/24/01 17:38	SRS	88-06-2		
2,4,5-Trichlorophenol	ND	ug/l	500	08/24/01 17:38	SRS	95-95-4		
2,4-Dinitrotoluene	ND	ug/l	100	08/24/01 17:38	SRS	121-14-2		
Hexachlorobenzene	ND	ug/l	100	08/24/01 17:38	SRS	118-74-1		
Pentachlorophenol	ND	ug/l	500	08/24/01 17:38	SRS	87-86-5		
Pyridine	ND	ug/l	100	08/24/01 17:38	SRS	110-86-1		
Hexachloroethane	ND	ug/l	100	08/24/01 17:38	SRS	67-72-1		
Nitrobenzene-d5 (S)	75	%		08/24/01 17:38	SRS	4165-60-0		
2-Fluorobiphenyl (S)	66	%		08/24/01 17:38	SRS	321-60-8		
Terphenyl-d14 (S)	94	%		08/24/01 17:38	SRS	1718-51-0		
Phenol-d6 (S)	21	%		08/24/01 17:38	SRS	13127-88-3		
2-Fluorophenol (S)	26	%		08/24/01 17:38	SRS	367-12-4		
2,4,6-Tribromophenol (S)	75	%		08/24/01 17:38	SRS			
Date Extracted				08/23/01				
GC Semivolatiles								
PCBs in Soil by 8082	Prep/Method: EPA 3550 / EPA 8082							
PCB-1016 (Aroclor 1016)	ND	ug/kg	66.	08/24/01 19:46	MED	12674-11-2		
PCB-1221 (Aroclor 1221)	ND	ug/kg	66.	08/24/01 19:46	MED	11104-28-2		
PCB-1232 (Aroclor 1232)	ND	ug/kg	66.	08/24/01 19:46	MED	11141-16-5		
PCB-1242 (Aroclor 1242)	ND	ug/kg	66.	08/24/01 19:46	MED	53469-21-9		

REPORT OF LABORATORY ANALYSIS

This report shall not be reproduced, except in full,
without the written consent of Pace Analytical Services, Inc.

Pace Analytical™
www.pacelabs.com

Pace Analytical Services, Inc.
7726 Moller Road
Indianapolis, IN 46268
Phone: 317.875.5894
Fax: 317.872.6189

Lab Project Number: 5016181
Client Project ID: JCI/Former Stanley Tools

Lab Sample No: 501203640 | Project Sample Number: 5016181-005 | Date Collected: 08/18/01 09:25
Client Sample ID: WCS-005 | Matrix: Soil | Date Received: 08/20/01 11:45

Parameters	Results	Units	Report Limit	Analyzed		CAS No.	Ftnote	Reg Limit
PCB-1248 (Aroclor 1248)	330	ug/kg	66.	08/24/01 19:46	MED	12672-29-6		
PCB-1254 (Aroclor 1254)	ND	ug/kg	66.	08/24/01 19:46	MED	11097-69-1		
PCB-1260 (Aroclor 1260)	ND	ug/kg	66.	08/24/01 19:46	MED	11096-82-5		
Decachlorobiphenyl (S)	36	%		08/24/01 19:46	MED	2051-24-3		
Tetrachloro-m-xylene (S)	110	%		08/24/01 19:46	MED	877-09-8		
Date Extracted				08/21/01				
GC/MS Volatiles								
Volatile Organics, TCLP Leach.	Prep/Method:	EPA 8260 / EPA 8260						
Vinyl chloride	ND	ug/l	100	08/27/01 15:33	CAC	75-01-4		
1,1-Dichloroethene	ND	ug/l	50.	08/27/01 15:33	CAC	75-35-4		
Chloroform	ND	ug/l	200	08/27/01 15:33	CAC	67-66-3		
1,2-Dichloroethane	ND	ug/l	50.	08/27/01 15:33	CAC	107-06-2		
2-Butanone (MEK)	ND	ug/l	1000	08/27/01 15:33	CAC	78-93-3		
Carbon tetrachloride	ND	ug/l	50.	08/27/01 15:33	CAC	56-23-5		
Trichloroethene	ND	ug/l	50.	08/27/01 15:33	CAC	79-01-6		
Benzene	ND	ug/l	50.	08/27/01 15:33	CAC	71-43-2		
Tetrachloroethene	ND	ug/l	50.	08/27/01 15:33	CAC	127-18-4		
Chlorobenzene	ND	ug/l	50.	08/27/01 15:33	CAC	108-90-7		
Dibromofluoromethane (S)	86	%		08/27/01 15:33	CAC			
Toluene-d8 (S)	102	%		08/27/01 15:33	CAC	2037-26-5		
4-Bromofluorobenzene (S)	99	%		08/27/01 15:33	CAC	460-00-4		

REPORT OF LABORATORY ANALYSIS

This report shall not be reproduced, except in full,
without the written consent of Pace Analytical Services, Inc.

Pace Analytical™
www.pacelabs.com

Pace Analytical Services, Inc.
7726 Moller Road
Indianapolis, IN 46268
Phone: 317.875.5894
Fax: 317.872.6189

Lab Project Number: 5016181
Client Project ID: JCI/Former Stanley Tools

Lab Sample No: 501203657 | Project Sample Number: 5016181-006 | Date Collected: 08/18/01 09:30
Client Sample ID: WCS-005FD | Matrix: Soil | Date Received: 08/20/01 11:45

Parameters	Results	Units	Report Limit	Analyzed		CAS No.	Ftnote	Reg Limit
Metals								
RCRA Metals, ICP, TCLP Leach.	Prep/Method: EPA 3010 / EPA 6010							
Arsenic	ND	mg/l	0.0500	08/24/01 16:45	HEB	7440-38-2		
Barium	0.580	mg/l	0.100	08/24/01 16:45	HEB	7440-39-3		
Cadmium	ND	mg/l	0.0100	08/24/01 16:45	HEB	7440-43-9		
Chromium	ND	mg/l	0.0500	08/24/01 16:45	HEB	7440-47-3		
Lead	ND	mg/l	0.0100	08/24/01 16:45	HEB	7439-92-1		
Selenium	ND	mg/l	0.0100	08/24/01 16:45	HEB	7782-49-2		
Silver	ND	mg/l	0.0500	08/24/01 16:45	HEB	7440-22-4		
Date Digested				08/22/01				
Mercury, CVAAS, TCLP Leachate	Prep/Method: EPA 1311 / EPA 7470							
Date Digested				08/21/01				
Mercury, CVAAS, TCLP Leachate	Prep/Method: EPA 7470 / EPA 7470							
Mercury	ND	ug/l	2.00	08/24/01 19:55	HEB	7439-97-6		
GC/MS Semivolatiles								
Semivolatile Organics	Prep/Method: EPA 3550 Sonication / EPA 8270							
Naphthalene	ND	ug/kg	330	08/28/01 22:13	SRS	91-20-3		
Acenaphthylene	ND	ug/kg	330	08/28/01 22:13	SRS	208-96-8		
Acenaphthene	ND	ug/kg	330	08/28/01 22:13	SRS	83-32-9		
Fluorene	ND	ug/kg	330	08/28/01 22:13	SRS	86-73-7		
Phenanthrene	ND	ug/kg	330	08/28/01 22:13	SRS	85-01-8		
Anthracene	ND	ug/kg	330	08/28/01 22:13	SRS	120-12-7		
Fluoranthene	ND	ug/kg	330	08/28/01 22:13	SRS	206-44-0		
Pyrene	ND	ug/kg	330	08/28/01 22:13	SRS	129-00-0		
Benzo(a)anthracene	ND	ug/kg	330	08/28/01 22:13	SRS	56-55-3		
Chrysene	ND	ug/kg	330	08/28/01 22:13	SRS	218-01-9		
Benzo(b)fluoranthene	ND	ug/kg	330	08/28/01 22:13	SRS	205-99-2		
Benzo(k)fluoranthene	ND	ug/kg	330	08/28/01 22:13	SRS	207-08-9		

REPORT OF LABORATORY ANALYSIS

This report shall not be reproduced, except in full,
without the written consent of Pace Analytical Services, Inc.

Pace Analytical™
www.pacelabs.com

Pace Analytical Services, Inc.
7726 Moller Road
Indianapolis, IN 46268
Phone: 317.875.5894
Fax: 317.872.6189

Lab Project Number: 5016181
Client Project ID: JCI/Former Stanley Tools

Lab Sample No: 501203657 | Project Sample Number: 5016181-006 | Date Collected: 08/18/01 09:30
Client Sample ID: WCS-005FD | Matrix: Soil | Date Received: 08/20/01 11:45

Parameters	Results	Units	Report Limit	Analyzed		CAS No.	Ftnote	Reg Limit
Benzo(a)pyrene	ND	ug/kg	330	08/28/01 22:13	SRS	50-32-8		
Indeno(1,2,3-cd)pyrene	ND	ug/kg	330	08/28/01 22:13	SRS	193-39-5		
Benzo(g,h,i)perylene	ND	ug/kg	330	08/28/01 22:13	SRS	191-24-2		
Dibenz(a,h)anthracene	ND	ug/kg	330	08/28/01 22:13	SRS	53-70-3		
2-Methylnaphthalene	ND	ug/kg	330	08/28/01 22:13	SRS	91-57-6		
Nitrobenzene-d5 (S)	78	%		08/28/01 22:13	SRS	4165-60-0		
2-Fluorobiphenyl (S)	80	%		08/28/01 22:13	SRS	321-60-8		
Terphenyl-d14 (S)	83	%		08/28/01 22:13	SRS	1718-51-0		
Date Extracted				08/27/01				
Semivolatile Organics, TCLP	Prep/Method:	EPA 3510 / EPA 8270						
1,4-Dichlorobenzene	ND	ug/l	100	08/24/01 18:11	SRS	106-46-7		
2-Methylphenol (o-Cresol)	ND	ug/l	100	08/24/01 18:11	SRS	95-48-7		
3&4-Methylphenol	ND	ug/l	200	08/24/01 18:11	SRS			
Nitrobenzene	ND	ug/l	100	08/24/01 18:11	SRS	98-95-3		
Hexachloro-1,3-butadiene	ND	ug/l	100	08/24/01 18:11	SRS	87-68-3		
2,4,6-Trichlorophenol	ND	ug/l	100	08/24/01 18:11	SRS	88-06-2		
2,4,5-Trichlorophenol	ND	ug/l	500	08/24/01 18:11	SRS	95-95-4		
2,4-Dinitrotoluene	ND	ug/l	100	08/24/01 18:11	SRS	121-14-2		
Hexachlorobenzene	ND	ug/l	100	08/24/01 18:11	SRS	118-74-1		
Pentachlorophenol	ND	ug/l	500	08/24/01 18:11	SRS	87-86-5		
Pyridine	ND	ug/l	100	08/24/01 18:11	SRS	110-86-1		
Hexachloroethane	ND	ug/l	100	08/24/01 18:11	SRS	67-72-1		
Nitrobenzene-d5 (S)	72	%		08/24/01 18:11	SRS	4165-60-0		
2-Fluorobiphenyl (S)	69	%		08/24/01 18:11	SRS	321-60-8		
Terphenyl-d14 (S)	90	%		08/24/01 18:11	SRS	1718-51-0		
Phenol-d6 (S)	20	%		08/24/01 18:11	SRS	13127-88-3		
2-Fluorophenol (S)	28	%		08/24/01 18:11	SRS	367-12-4		
2,4,6-Tribromophenol (S)	74	%		08/24/01 18:11	SRS			
Date Extracted				08/23/01				
GC Semivolatiles								
PCBs in Soil by 8082	Prep/Method:	EPA 3550 / EPA 8082						
PCB-1016 (Aroclor 1016)	ND	ug/kg	66.	08/24/01 19:46	MED	12674-11-2		
PCB-1221 (Aroclor 1221)	ND	ug/kg	66.	08/24/01 19:46	MED	11104-28-2		
PCB-1232 (Aroclor 1232)	ND	ug/kg	66.	08/24/01 19:46	MED	11141-16-5		
PCB-1242 (Aroclor 1242)	ND	ug/kg	66.	08/24/01 19:46	MED	53469-21-9		

REPORT OF LABORATORY ANALYSIS

This report shall not be reproduced, except in full,
without the written consent of Pace Analytical Services, Inc.

Pace Analytical
www.pacelabs.com

Pace Analytical Services, Inc.
7726 Moller Road
Indianapolis, IN 46268
Phone: 317.875.5894
Fax: 317.872.6189

Lab Project Number: 5016181
Client Project ID: JCI/Former Stanley Tools

Lab Sample No: 501203657 | Project Sample Number: 5016181-006 | Date Collected: 08/18/01 09:30
Client Sample ID: WCS-005FD | Matrix: Soil | Date Received: 08/20/01 11:45

Parameters	Results	Units	Report Limit	Analyzed		CAS No.	Ftnote	Reg Limit
PCB-1248 (Aroclor 1248)	380	ug/kg	66.	08/24/01 19:46	MED	12672-29-6		
PCB-1254 (Aroclor 1254)	ND	ug/kg	66.	08/24/01 19:46	MED	11097-69-1		
PCB-1260 (Aroclor 1260)	ND	ug/kg	66.	08/24/01 19:46	MED	11096-82-5		
Decachlorobiphenyl (S)	34	%		08/24/01 19:46	MED	2051-24-3		
Tetrachloro-m-xylene (S)	108	%		08/24/01 19:46	MED	877-09-8		
Date Extracted				08/21/01				
GC/MS Volatiles								
Volatile Organics, TCLP Leach.	Prep/Method: EPA 8260 / EPA 8260							
Vinyl chloride	ND	ug/l	100	08/27/01 17:41	CAC	75-01-4		
1,1-Dichloroethene	ND	ug/l	50.	08/27/01 17:41	CAC	75-35-4		
Chloroform	ND	ug/l	200	08/27/01 17:41	CAC	67-66-3		
1,2-Dichloroethane	ND	ug/l	50.	08/27/01 17:41	CAC	107-06-2		
2-Butanone (MEK)	ND	ug/l	1000	08/27/01 17:41	CAC	78-93-3		
Carbon tetrachloride	ND	ug/l	50.	08/27/01 17:41	CAC	56-23-5		
Trichloroethene	ND	ug/l	50.	08/27/01 17:41	CAC	79-01-6		
Benzene	ND	ug/l	50.	08/27/01 17:41	CAC	71-43-2		
Tetrachloroethene	ND	ug/l	50.	08/27/01 17:41	CAC	127-18-4		
Chlorobenzene	ND	ug/l	50.	08/27/01 17:41	CAC	108-90-7		
Dibromofluoromethane (S)	87	%		08/27/01 17:41	CAC			
Toluene-d8 (S)	99	%		08/27/01 17:41	CAC	2037-26-5		
4-Bromofluorobenzene (S)	95	%		08/27/01 17:41	CAC	460-00-4		

REPORT OF LABORATORY ANALYSIS

This report shall not be reproduced, except in full,
without the written consent of Pace Analytical Services, Inc.

Pace Analytical™
www.pacelabs.com

Pace Analytical Services, Inc.
7726 Moller Road
Indianapolis, IN 46268
Phone: 317.875.5894
Fax: 317.872.6189

Lab Project Number: 5016181
Client Project ID: JCI/Former Stanley Tools

Lab Sample No: 501203665 | Project Sample Number: 5016181-007 | Date Collected: 08/18/01 09:35
Client Sample ID: WCS-006 | Matrix: Soil | Date Received: 08/20/01 11:45

Parameters	Results	Units	Report Limit	Analyzed		CAS No.	Ftnote	Reg Limit
Metals								
RCRA Metals, ICP, TCLP Leach.	Prep/Method: EPA 3010 / EPA 6010							
Arsenic	ND	mg/l	0.250	08/28/01 22:11	HEB	7440-38-2		
Barium	0.589	mg/l	0.500	08/28/01 22:11	HEB	7440-39-3		
Cadmium	ND	mg/l	0.0500	08/28/01 22:11	HEB	7440-43-9		
Chromium	ND	mg/l	0.250	08/28/01 22:11	HEB	7440-47-3		
Lead	ND	mg/l	0.0500	08/28/01 22:11	HEB	7439-92-1		
Selenium	ND	mg/l	0.0500	08/28/01 22:11	HEB	7782-49-2		
Silver	ND	mg/l	0.250	08/28/01 22:11	HEB	7440-22-4		
Date Digested				08/27/01				
Mercury, CVAAS, TCLP Leachate	Prep/Method: EPA 1311 / EPA 7470							
Date Digested				08/22/01				
Mercury, CVAAS, TCLP Leachate	Prep/Method: EPA 7470 / EPA 7470							
Mercury	ND	ug/l	2.00	08/24/01 19:55	HEB	7439-97-6		
GC/MS Semivolatiles								
Semivolatile Organics	Prep/Method: EPA 3550 Sonication / EPA 8270							
Naphthalene	ND	ug/kg	330	08/28/01 21:08	SRS	91-20-3		
Acenaphthylene	ND	ug/kg	330	08/28/01 21:08	SRS	208-96-8		
Acenaphthene	ND	ug/kg	330	08/28/01 21:08	SRS	83-32-9		
Fluorene	ND	ug/kg	330	08/28/01 21:08	SRS	86-73-7		
Phenanthrene	ND	ug/kg	330	08/28/01 21:08	SRS	85-01-8		
Anthracene	ND	ug/kg	330	08/28/01 21:08	SRS	120-12-7		
Fluoranthene	ND	ug/kg	330	08/28/01 21:08	SRS	206-44-0		
Pyrene	ND	ug/kg	330	08/28/01 21:08	SRS	129-00-0		
Benzo(a)anthracene	ND	ug/kg	330	08/28/01 21:08	SRS	56-55-3		
Chrysene	ND	ug/kg	330	08/28/01 21:08	SRS	218-01-9		
Benzo(b)fluoranthene	ND	ug/kg	330	08/28/01 21:08	SRS	205-99-2		
Benzo(k)fluoranthene	ND	ug/kg	330	08/28/01 21:08	SRS	207-08-9		

REPORT OF LABORATORY ANALYSIS

This report shall not be reproduced, except in full,
without the written consent of Pace Analytical Services, Inc.

Pace Analytical™
www.pacelabs.com

Pace Analytical Services, Inc.
7726 Moller Road
Indianapolis, IN 46268
Phone: 317.875.5894
Fax: 317.872.6189

Lab Project Number: 5016181
Client Project ID: JCI/Former Stanley Tools

Lab Sample No: 501203665 | Project Sample Number: 5016181-007 | Date Collected: 08/18/01 09:35
Client Sample ID: WCS-006 | Matrix: Soil | Date Received: 08/20/01 11:45

Parameters	Results	Units	Report Limit	Analyzed		CAS No.	Ftnote	Reg Limit
Benzo(a)pyrene	ND	ug/kg	330	08/28/01 21:08	SRS	50-32-8		
Indeno(1,2,3-cd)pyrene	ND	ug/kg	330	08/28/01 21:08	SRS	193-39-5		
Benzo(g,h,i)perylene	ND	ug/kg	330	08/28/01 21:08	SRS	191-24-2		
Dibenz(a,h)anthracene	ND	ug/kg	330	08/28/01 21:08	SRS	53-70-3		
2-Methylnaphthalene	ND	ug/kg	330	08/28/01 21:08	SRS	91-57-6		
Nitrobenzene-d5 (S)	70	%		08/28/01 21:08	SRS	4165-60-0		
2-Fluorobiphenyl (S)	64	%		08/28/01 21:08	SRS	321-60-8		
Terphenyl-d14 (S)	67	%		08/28/01 21:08	SRS	1718-51-0		
Date Extracted				08/27/01				
Semivolatile Organics, TCLP	Prep/Method: EPA 3510 / EPA 8270							
1,4-Dichlorobenzene	ND	ug/l	100	08/24/01 18:44	SRS	106-46-7		
2-Methylphenol (o-Cresol)	ND	ug/l	100	08/24/01 18:44	SRS	95-48-7		
3&4-Methylphenol	ND	ug/l	200	08/24/01 18:44	SRS			
Nitrobenzene	ND	ug/l	100	08/24/01 18:44	SRS	98-95-3		
Hexachloro-1,3-butadiene	ND	ug/l	100	08/24/01 18:44	SRS	87-68-3		
2,4,6-Trichlorophenol	ND	ug/l	100	08/24/01 18:44	SRS	88-06-2		
2,4,5-Trichlorophenol	ND	ug/l	500	08/24/01 18:44	SRS	95-95-4		
2,4-Dinitrotoluene	ND	ug/l	100	08/24/01 18:44	SRS	121-14-2		
Hexachlorobenzene	ND	ug/l	100	08/24/01 18:44	SRS	118-74-1		
Pentachlorophenol	ND	ug/l	500	08/24/01 18:44	SRS	87-86-5		
Pyridine	ND	ug/l	100	08/24/01 18:44	SRS	110-86-1		
Hexachloroethane	ND	ug/l	100	08/24/01 18:44	SRS	67-72-1		
Nitrobenzene-d5 (S)	79	%		08/24/01 18:44	SRS	4165-60-0		
2-Fluorobiphenyl (S)	69	%		08/24/01 18:44	SRS	321-60-8		
Terphenyl-d14 (S)	91	%		08/24/01 18:44	SRS	1718-51-0		
Phenol-d6 (S)	6	%		08/24/01 18:44	SRS	13127-88-3		
2-Fluorophenol (S)	7	%		08/24/01 18:44	SRS	367-12-4		
2,4,6-Tribromophenol (S)	55	%		08/24/01 18:44	SRS			
Date Extracted				08/23/01				
GC Semivolatiles								
PCBs in Soil by 8082	Prep/Method: EPA 3550 / EPA 8082							
PCB-1016 (Aroclor 1016)	ND	ug/kg	33.	08/24/01 16:56	MED	12674-11-2		
PCB-1221 (Aroclor 1221)	ND	ug/kg	33.	08/24/01 16:56	MED	11104-28-2		
PCB-1232 (Aroclor 1232)	ND	ug/kg	33.	08/24/01 16:56	MED	11141-16-5		
PCB-1242 (Aroclor 1242)	ND	ug/kg	33.	08/24/01 16:56	MED	53469-21-9		

REPORT OF LABORATORY ANALYSIS

This report shall not be reproduced, except in full,
without the written consent of Pace Analytical Services, Inc.

Pace Analytical™
www.pacelabs.com

Pace Analytical Services, Inc.
7726 Moller Road
Indianapolis, IN 46268
Phone: 317.875.5894
Fax: 317.872.6189

Lab Project Number: 5016181
Client Project ID: JCI/Former Stanley Tools

Lab Sample No: 501203665 | Project Sample Number: 5016181-007 | Date Collected: 08/18/01 09:35
Client Sample ID: WCS-006 | Matrix: Soil | Date Received: 08/20/01 11:45

Parameters	Results	Units	Report Limit	Analyzed		CAS No.	Ftnote	Reg Limit
PCB-1248 (Aroclor 1248)	70.	ug/kg	33.	08/24/01 16:56	MED	12672-29-6		
PCB-1254 (Aroclor 1254)	ND	ug/kg	33.	08/24/01 16:56	MED	11097-69-1		
PCB-1260 (Aroclor 1260)	ND	ug/kg	33.	08/24/01 16:56	MED	11096-82-5		
Decachlorobiphenyl (S)	91	%		08/24/01 16:56	MED	2051-24-3		
Tetrachloro-m-xylene (S)	118	%		08/24/01 16:56	MED	877-09-8		
Date Extracted				08/21/01				
GC/MS Volatiles								
Volatile Organics, TCLP Leach.	Prep/Method: EPA 8260 / EPA 8260							
Vinyl chloride	ND	ug/l	100	08/27/01 16:37	CAC	75-01-4		
1,1-Dichloroethene	ND	ug/l	50.	08/27/01 16:37	CAC	75-35-4		
Chloroform	ND	ug/l	200	08/27/01 16:37	CAC	67-66-3		
1,2-Dichloroethane	ND	ug/l	50.	08/27/01 16:37	CAC	107-06-2		
2-Butanone (MEK)	ND	ug/l	1000	08/27/01 16:37	CAC	78-93-3		
Carbon tetrachloride	ND	ug/l	50.	08/27/01 16:37	CAC	56-23-5		
Trichloroethene	ND	ug/l	50.	08/27/01 16:37	CAC	79-01-6		
Benzene	ND	ug/l	50.	08/27/01 16:37	CAC	71-43-2		
Tetrachloroethene	ND	ug/l	50.	08/27/01 16:37	CAC	127-18-4		
Chlorobenzene	ND	ug/l	50.	08/27/01 16:37	CAC	108-90-7		
Dibromofluoromethane (S)	87	%		08/27/01 16:37	CAC			
Toluene-d8 (S)	104	%		08/27/01 16:37	CAC	2037-26-5		
4-Bromofluorobenzene (S)	102	%		08/27/01 16:37	CAC	460-00-4		

REPORT OF LABORATORY ANALYSIS

This report shall not be reproduced, except in full,
without the written consent of Pace Analytical Services, Inc.

Pace Analytical™
www.pacelabs.com

Pace Analytical Services, Inc.
7726 Moller Road
Indianapolis, IN 46268
Phone: 317.875.5894
Fax: 317.872.6189

Lab Project Number: 5016181
Client Project ID: JCI/Former Stanley Tools

Lab Sample No: 501203673 | Project Sample Number: 5016181-008 | Date Collected: 08/18/01 09:40
Client Sample ID: WCS-007 | Matrix: Soil | Date Received: 08/20/01 11:45

Parameters	Results	Units	Report Limit	Analyzed		CAS No.	Ftnote	Reg Limit
Metals								
RCRA Metals, ICP, TCLP Leach.	Prep/Method: EPA 3010 / EPA 6010							
Arsenic	ND	mg/l	0.250	08/28/01 22:11	HEB	7440-38-2		
Barium	0.559	mg/l	0.500	08/28/01 22:11	HEB	7440-39-3		
Cadmium	ND	mg/l	0.0500	08/28/01 22:11	HEB	7440-43-9		
Chromium	ND	mg/l	0.250	08/28/01 22:11	HEB	7440-47-3		
Lead	ND	mg/l	0.0500	08/28/01 22:11	HEB	7439-92-1		
Selenium	ND	mg/l	0.0500	08/28/01 22:11	HEB	7782-49-2		
Silver	ND	mg/l	0.250	08/28/01 22:11	HEB	7440-22-4		
Date Digested				08/27/01				
Mercury, CVAAS, TCLP Leachate	Prep/Method: EPA 1311 / EPA 7470							
Date Digested				08/22/01				
Mercury, CVAAS, TCLP Leachate	Prep/Method: EPA 7470 / EPA 7470							
Mercury	ND	ug/l	2.00	08/24/01 19:55	HEB	7439-97-6		
GC/MS Semivolatiles								
Semivolatile Organics	Prep/Method: EPA 3550 Sonication / EPA 8270							
Naphthalene	ND	ug/kg	330	08/28/01 17:21	SRS	91-20-3		
Acenaphthylene	ND	ug/kg	330	08/28/01 17:21	SRS	208-96-8		
Acenaphthene	ND	ug/kg	330	08/28/01 17:21	SRS	83-32-9		
Fluorene	ND	ug/kg	330	08/28/01 17:21	SRS	86-73-7		
Phenanthrene	ND	ug/kg	330	08/28/01 17:21	SRS	85-01-8		
Anthracene	ND	ug/kg	330	08/28/01 17:21	SRS	120-12-7		
Fluoranthene	ND	ug/kg	330	08/28/01 17:21	SRS	206-44-0		
Pyrene	ND	ug/kg	330	08/28/01 17:21	SRS	129-00-0		
Benzo(a)anthracene	ND	ug/kg	330	08/28/01 17:21	SRS	56-55-3		
Chrysene	ND	ug/kg	330	08/28/01 17:21	SRS	218-01-9		
Benzo(b)fluoranthene	ND	ug/kg	330	08/28/01 17:21	SRS	205-99-2		
Benzo(k)fluoranthene	ND	ug/kg	330	08/28/01 17:21	SRS	207-08-9		

REPORT OF LABORATORY ANALYSIS

This report shall not be reproduced, except in full,
without the written consent of Pace Analytical Services, Inc.

Pace Analytical™
www.pacelabs.com

Pace Analytical Services, Inc.
7726 Moller Road
Indianapolis, IN 46268
Phone: 317.875.5894
Fax: 317.872.6189

Lab Project Number: 5016181
Client Project ID: JCI/Former Stanley Tools

Lab Sample No: 501203673 | Project Sample Number: 5016181-008 | Date Collected: 08/18/01 09:40
Client Sample ID: WCS-007 | Matrix: Soil | Date Received: 08/20/01 11:45

Parameters	Results	Units	Report Limit	Analyzed		CAS No.	Ftnote	Reg Limit
Benzo(a)pyrene	ND	ug/kg	330	08/28/01 17:21	SRS	50-32-8		
Indeno(1,2,3-cd)pyrene	ND	ug/kg	330	08/28/01 17:21	SRS	193-39-5		
Benzo(g,h,i)perylene	ND	ug/kg	330	08/28/01 17:21	SRS	191-24-2		
Dibenz(a,h)anthracene	ND	ug/kg	330	08/28/01 17:21	SRS	53-70-3		
2-Methylnaphthalene	ND	ug/kg	330	08/28/01 17:21	SRS	91-57-6		
Nitrobenzene-d5 (S)	70	%		08/28/01 17:21	SRS	4165-60-0		
2-Fluorobiphenyl (S)	70	%		08/28/01 17:21	SRS	321-60-8		
Terphenyl-d14 (S)	75	%		08/28/01 17:21	SRS	1718-51-0		
Date Extracted				08/27/01				
Semivolatile Organics, TCLP	Prep/Method: EPA 3510 / EPA 8270							
1,4-Dichlorobenzene	ND	ug/l	100	08/24/01 19:16	SRS	106-46-7		
2-Methylphenol (o-Cresol)	ND	ug/l	100	08/24/01 19:16	SRS	95-48-7		
3&4-Methylphenol	ND	ug/l	200	08/24/01 19:16	SRS			
Nitrobenzene	ND	ug/l	100	08/24/01 19:16	SRS	98-95-3		
Hexachloro-1,3-butadiene	ND	ug/l	100	08/24/01 19:16	SRS	87-68-3		
2,4,6-Trichlorophenol	ND	ug/l	100	08/24/01 19:16	SRS	88-06-2		
2,4,5-Trichlorophenol	ND	ug/l	500	08/24/01 19:16	SRS	95-95-4		
2,4-Dinitrotoluene	ND	ug/l	100	08/24/01 19:16	SRS	121-14-2		
Hexachlorobenzene	ND	ug/l	100	08/24/01 19:16	SRS	118-74-1		
Pentachlorophenol	ND	ug/l	500	08/24/01 19:16	SRS	87-86-5		
Pyridine	ND	ug/l	100	08/24/01 19:16	SRS	110-86-1		
Hexachloroethane	ND	ug/l	100	08/24/01 19:16	SRS	67-72-1		
Nitrobenzene-d5 (S)	76	%		08/24/01 19:16	SRS	4165-60-0		
2-Fluorobiphenyl (S)	66	%		08/24/01 19:16	SRS	321-60-8		
Terphenyl-d14 (S)	92	%		08/24/01 19:16	SRS	1718-51-0		
Phenol-d6 (S)	16	%		08/24/01 19:16	SRS	13127-88-3		
2-Fluorophenol (S)	20	%		08/24/01 19:16	SRS	367-12-4		
2,4,6-Tribromophenol (S)	73	%		08/24/01 19:16	SRS			
Date Extracted				08/23/01				
GC Semivolatiles								
PCBs in Soil by 8082	Prep/Method: EPA 3550 / EPA 8082							
PCB-1016 (Aroclor 1016)	ND	ug/kg	66.	08/24/01 20:15	MED	12674-11-2		
PCB-1221 (Aroclor 1221)	ND	ug/kg	66.	08/24/01 20:15	MED	11104-28-2		
PCB-1232 (Aroclor 1232)	ND	ug/kg	66.	08/24/01 20:15	MED	11141-16-5		
PCB-1242 (Aroclor 1242)	ND	ug/kg	66.	08/24/01 20:15	MED	53469-21-9		

REPORT OF LABORATORY ANALYSIS

This report shall not be reproduced, except in full,
without the written consent of Pace Analytical Services, Inc.

Pace Analytical™
www.pacelabs.com

Pace Analytical Services, Inc.
7726 Moller Road
Indianapolis, IN 46268
Phone: 317.875.5894
Fax: 317.872.6189

Lab Project Number: 5016181
Client Project ID: JCI/Former Stanley Tools

Lab Sample No: 501203673 Project Sample Number: 5016181-008 Date Collected: 08/18/01 09:40
Client Sample ID: WCS-007 Matrix: Soil Date Received: 08/20/01 11:45

Parameters	Results	Units	Report Limit	Analyzed		CAS No.	Ftnote	Reg Limit
PCB-1248 (Aroclor 1248)	340	ug/kg	66.	08/24/01 20:15	MED	12672-29-6		
PCB-1254 (Aroclor 1254)	ND	ug/kg	66.	08/24/01 20:15	MED	11097-69-1		
PCB-1260 (Aroclor 1260)	ND	ug/kg	66.	08/24/01 20:15	MED	11096-82-5		
Decachlorobiphenyl (S)	34	%		08/24/01 20:15	MED	2051-24-3		
Tetrachloro-m-xylene (S)	104	%		08/24/01 20:15	MED	877-09-8		
Date Extracted				08/21/01				
GC/MS Volatiles								
Volatile Organics, TCLP Leach.	Prep/Method: EPA 8260 / EPA 8260							
Vinyl chloride	ND	ug/l	100	08/27/01 16:05	CAC	75-01-4		
1,1-Dichloroethene	ND	ug/l	50.	08/27/01 16:05	CAC	75-35-4		
Chloroform	ND	ug/l	200	08/27/01 16:05	CAC	67-66-3		
1,2-Dichloroethane	ND	ug/l	50.	08/27/01 16:05	CAC	107-06-2		
2-Butanone (MEK)	ND	ug/l	1000	08/27/01 16:05	CAC	78-93-3		
Carbon tetrachloride	ND	ug/l	50.	08/27/01 16:05	CAC	56-23-5		
Trichloroethene	ND	ug/l	50.	08/27/01 16:05	CAC	79-01-6		
Benzene	ND	ug/l	50.	08/27/01 16:05	CAC	71-43-2		
Tetrachloroethene	ND	ug/l	50.	08/27/01 16:05	CAC	127-18-4		
Chlorobenzene	ND	ug/l	50.	08/27/01 16:05	CAC	108-90-7		
Dibromofluoromethane (S)	87	%		08/27/01 16:05	CAC			
Toluene-d8 (S)	100	%		08/27/01 16:05	CAC	2037-26-5		
4-Bromofluorobenzene (S)	96	%		08/27/01 16:05	CAC	460-00-4		

REPORT OF LABORATORY ANALYSIS

This report shall not be reproduced, except in full,
without the written consent of Pace Analytical Services, Inc.

Pace Analytical™
www.pacelabs.com

Pace Analytical Services, Inc.
7726 Moller Road
Indianapolis, IN 46268
Phone: 317.875.5894
Fax: 317.872.6189

Lab Project Number: 5016181
Client Project ID: JCI/Former Stanley Tools

PARAMETER FOOTNOTES

ND	Not Detected
NC	Not Calculable
(S)	Surrogate

REPORT OF LABORATORY ANALYSIS

This report shall not be reproduced, except in full,
without the written consent of Pace Analytical Services, Inc.

Pace Analytical™
www.pacelabs.com

Pace Analytical Services, Inc.
7726 Moller Road
Indianapolis, IN 46268
Phone: 317.875.5894
Fax: 317.872.6189

QUALITY CONTROL DATA

Lab Project Number: 5016181
Client Project ID: JCI/Former Stanley Tools

QC Batch: 27645 — Analysis Method: EPA 8082
QC Batch Method: EPA 3550 — Analysis Description: PCBs in Soil by 8082
Associated Lab Samples: 501203525 501203574 501203624 501203632 501203640 501203657 501203665 501203673

METHOD BLANK: 501204788
Associated Lab Samples: 501203525 501203574 501203624 501203632 501203640 501203657 501203665 501203673

Parameter	Units	Blank Result	Reporting Limit	Footnotes
PCB-1016 (Aroclor 1016)	ug/kg	ND	33.	
PCB-1221 (Aroclor 1221)	ug/kg	ND	33.	
PCB-1232 (Aroclor 1232)	ug/kg	ND	33.	
PCB-1242 (Aroclor 1242)	ug/kg	ND	33.	
PCB-1248 (Aroclor 1248)	ug/kg	ND	33.	
PCB-1254 (Aroclor 1254)	ug/kg	ND	33.	
PCB-1260 (Aroclor 1260)	ug/kg	ND	33.	
Decachlorobiphenyl (S)	%	97		
Tetrachloro-m-xylene (S)	%	123		

LABORATORY CONTROL SAMPLE: 501204812

Parameter	Units	Spike Conc.	LCS Result	LCS % Rec	Footnotes
PCB-1016 (Aroclor 1016)	ug/kg	166.7	119.7	72	
PCB-1260 (Aroclor 1260)	ug/kg	166.7	144.7	87	
Decachlorobiphenyl (S)				96	
Tetrachloro-m-xylene (S)				120	

MATRIX SPIKE & MATRIX SPIKE DUPLICATE: 501204796 501204804

Parameter	Units	501203814 Result	Spike Conc.	MS Result	MSD Result	MS % Rec	MSD % Rec	RPD	Footnotes
PCB-1016 (Aroclor 1016)	ug/kg	0	166.70	98.67	117.7	59	71	18	
PCB-1260 (Aroclor 1260)	ug/kg	0	166.70	138.0	145.7	83	87	5	
Decachlorobiphenyl (S)						96	95		

REPORT OF LABORATORY ANALYSIS

This report shall not be reproduced, except in full,
without the written consent of Pace Analytical Services, Inc.

Pace Analytical™
www.pacelabs.com

Pace Analytical Services, Inc.
7726 Moller Road
Indianapolis, IN 46268
Phone: 317.875.5894
Fax: 317.872.6189

QUALITY CONTROL DATA

Lab Project Number: 5016181
Client Project ID: JCI/Former Stanley Tools

MATRIX SPIKE & MATRIX SPIKE DUPLICATE: 501204796 501204804

Parameter	Units	501203814 Result	Spike Conc.	MS Result	MSD Result	MS % Rec	MSD % Rec	RPD	Footnotes
Tetrachloro-m-xylene (S)						120	124		

REPORT OF LABORATORY ANALYSIS

This report shall not be reproduced, except in full,
without the written consent of Pace Analytical Services, Inc.

Pace Analytical™
www.pacelabs.com

Pace Analytical Services, Inc.
7726 Moller Road
Indianapolis, IN 46268
Phone: 317.875.5894
Fax: 317.872.6189

QUALITY CONTROL DATA

Lab Project Number: 5016181
Client Project ID: JCI/Former Stanley Tools

QC Batch: 27707 — Analysis Method: EPA 8270
QC Batch Method: EPA 3510 — Analysis Description: Semivolatile Organics, TCLP
Associated Lab Samples: 501203525 501203574 501203624 501203632 501203640 501203657 501203665 501203673

METHOD BLANK: 501208037
Associated Lab Samples: 501203525 501203574 501203624 501203632 501203640 501203657 501203665 501203673

Parameter	Units	Blank Result	Reporting Limit	Footnotes
1,4-Dichlorobenzene	ug/l	ND	100	
2-Methylphenol (o-Cresol)	ug/l	ND	100	
3&4-Methylphenol	ug/l	ND	200	
Nitrobenzene	ug/l	ND	100	
Hexachloro-1,3-butadiene	ug/l	ND	100	
2,4,6-Trichlorophenol	ug/l	ND	100	
2,4,5-Trichlorophenol	ug/l	ND	500	
2,4-Dinitrotoluene	ug/l	ND	100	
Hexachlorobenzene	ug/l	ND	100	
Pentachlorophenol	ug/l	ND	500	
Pyridine	ug/l	ND	100	
Hexachloroethane	ug/l	ND	100	
Nitrobenzene-d5 (S)	%	84		
2-Fluorobiphenyl (S)	%	79		
Terphenyl-d14 (S)	%	89		
Phenol-d6 (S)	%	44		
2-Fluorophenol (S)	%	56		
2,4,6-Tribromophenol (S)	%	88		

LABORATORY CONTROL SAMPLE: 501208060

Parameter	Units	Spike Conc.	LCS Result	LCS % Rec	Footnotes
1,4-Dichlorobenzene	ug/l	1000	684.6	68	
2-Methylphenol (o-Cresol)	ug/l	1000	741.9	74	
3&4-Methylphenol	ug/l	2000	1338	67	
Nitrobenzene	ug/l	1000	804.8	80	

REPORT OF LABORATORY ANALYSIS

This report shall not be reproduced, except in full,
without the written consent of Pace Analytical Services, Inc.

Pace Analytical™
www.pacelabs.com

Pace Analytical Services, Inc.
7726 Moller Road
Indianapolis, IN 46268
Phone: 317.875.5894
Fax: 317.872.6189

QUALITY CONTROL DATA

Lab Project Number: 5016181
Client Project ID: JCI/Former Stanley Tools

LABORATORY CONTROL SAMPLE: 501208060

Parameter	Units	Spike Conc.	LCS Result	LCS % Rec	Footnotes
Hexachloro-1,3-butadiene	ug/l	1000	682.9	68	
2,4,6-Trichlorophenol	ug/l	1000	797.0	80	
2,4,5-Trichlorophenol	ug/l	1000	849.9	85	
2,4-Dinitrotoluene	ug/l	1000	958.1	96	
Hexachlorobenzene	ug/l	1000	699.2	70	
Pentachlorophenol	ug/l	1000	948.9	95	
Pyridine	ug/l	1000	342.2	34	
Hexachloroethane	ug/l	1000	669.6	67	
Nitrobenzene-d5 (S)				80	
2-Fluorobiphenyl (S)				78	
Terphenyl-d14 (S)				95	
Phenol-d6 (S)				43	
2-Fluorophenol (S)				54	
2,4,6-Tribromophenol (S)				88	

MATRIX SPIKE & MATRIX SPIKE DUPLICATE: 501208045 501208052

Parameter	Units	501203525 Result	Spike Conc.	MS Result	MSD Result	MS % Rec	MSD % Rec	RPD	Footnotes
1,4-Dichlorobenzene	ug/l	0	100.00	53.98	61.93	54	62	14	
2-Methylphenol (o-Cresol)	ug/l	0	100.00	54.36	60.12	54	60	10	
3&4-Methylphenol	ug/l	0	200.00	96.95	107.3	48	54	10	
Nitrobenzene	ug/l	0	100.00	78.02	81.00	78	81	4	
Hexachloro-1,3-butadiene	ug/l	0	100.00	48.32	54.58	48	55	12	
2,4,6-Trichlorophenol	ug/l	0	100.00	69.48	70.21	70	70	1	
2,4,5-Trichlorophenol	ug/l	0	100.00	77.43	80.15	77	80	3	
2,4-Dinitrotoluene	ug/l	0	100.00	90.05	97.33	90	97	8	
Hexachlorobenzene	ug/l	0	100.00	62.82	66.55	63	67	6	
Pentachlorophenol	ug/l	0	100.00	86.58	89.56	87	90	3	
Pyridine	ug/l	0	100.00	31.44	31.78	31	32	1	
Hexachloroethane	ug/l	0	100.00	50.03	56.21	50	56	12	
Nitrobenzene-d5 (S)						78	81		
2-Fluorobiphenyl (S)						72	78		
Terphenyl-d14 (S)						85	89		
Phenol-d6 (S)						36	39		

REPORT OF LABORATORY ANALYSIS

This report shall not be reproduced, except in full,
without the written consent of Pace Analytical Services, Inc.

Pace Analytical™
www.pacelabs.com

Pace Analytical Services, Inc.
7726 Moller Road
Indianapolis, IN 46268
Phone: 317.875.5894
Fax: 317.872.6189

QUALITY CONTROL DATA

Lab Project Number: 5016181
Client Project ID: JCI/Former Stanley Tools

MATRIX SPIKE & MATRIX SPIKE DUPLICATE: 501208045 501208052

Parameter	Units	501203525 Result	Spike Conc.	MS Result	MSD Result	MS % Rec	MSD % Rec	RPD	Footnotes
2-Fluorophenol (S)						43	48		
2,4,6-Tribromophenol (S)						77	80		

REPORT OF LABORATORY ANALYSIS

This report shall not be reproduced, except in full,
without the written consent of Pace Analytical Services, Inc.

Pace Analytical™
www.pacelabs.com

Pace Analytical Services, Inc.
7726 Moller Road
Indianapolis, IN 46268
Phone: 317.875.5894
Fax: 317.872.6189

QUALITY CONTROL DATA

Lab Project Number: 5016181
Client Project ID: JCI/Former Stanley Tools

QC Batch: 27836 Analysis Method: EPA 8270
QC Batch Method: EPA 3550 Sonication Analysis Description: Semivolatile Organics
Associated Lab Samples: 501203525 501203574 501203624 501203632 501203640 501203657 501203665 501203673

METHOD BLANK: 501213920
Associated Lab Samples: 501203525 501203574 501203624 501203632 501203640 501203657 501203665 501203673

Parameter	Units	Blank Result	Reporting Limit	Footnotes
Naphthalene	ug/kg	ND	330	
2-Methylnaphthalene	ug/kg	ND	330	
Acenaphthylene	ug/kg	ND	330	
Acenaphthene	ug/kg	ND	330	
Fluorene	ug/kg	ND	330	
Phenanthrene	ug/kg	ND	330	
Anthracene	ug/kg	ND	330	
Fluoranthene	ug/kg	ND	330	
Pyrene	ug/kg	ND	330	
Benzo(a)anthracene	ug/kg	ND	330	
Chrysene	ug/kg	ND	330	
Benzo(b)fluoranthene	ug/kg	ND	330	
Benzo(k)fluoranthene	ug/kg	ND	330	
Benzo(a)pyrene	ug/kg	ND	330	
Indeno(1,2,3-cd)pyrene	ug/kg	ND	330	
Dibenz(a,h)anthracene	ug/kg	ND	330	
Benzo(g,h,i)perylene	ug/kg	ND	330	
Nitrobenzene-d5 (S)	%	76		
2-Fluorobiphenyl (S)	%	76		
Terphenyl-d14 (S)	%	87		

LABORATORY CONTROL SAMPLE: 501213938

Parameter	Units	Spike Conc.	LCS Result	LCS % Rec	Footnotes
Acenaphthene	ug/kg	3333	2110	63	
Pyrene	ug/kg	3333	2584	78	

Date: 08/31/01

REPORT OF LABORATORY ANALYSIS

This report shall not be reproduced, except in full,
without the written consent of Pace Analytical Services, Inc.

Pace Analytical™
www.pacelabs.com

Pace Analytical Services, Inc.
7726 Moller Road
Indianapolis, IN 46268
Phone: 317.875.5894
Fax: 317.872.6189

QUALITY CONTROL DATA

Lab Project Number: 5016181
Client Project ID: JCI/Former Stanley Tools

LABORATORY CONTROL SAMPLE: 501213938

Parameter	Units	Spike Conc.	LCS Result	LCS % Rec	Footnotes
Nitrobenzene-d5 (S)				64	
2-Fluorobiphenyl (S)				63	
Terphenyl-d14 (S)				79	

MATRIX SPIKE & MATRIX SPIKE DUPLICATE: 501213946 501213953

Parameter	Units	501213144 Result	Spike Conc.	MS Result	MSD Result	MS % Rec	MSD % Rec	RPD	Footnotes
Acenaphthene	ug/kg	0	3333.00	2181	2472	65	74	13	
Pyrene	ug/kg	149.9	3333.00	2486	2733	70	78	9	
Nitrobenzene-d5 (S)						66	72		
2-Fluorobiphenyl (S)						67	73		
Terphenyl-d14 (S)						74	85		

REPORT OF LABORATORY ANALYSIS

This report shall not be reproduced, except in full,
without the written consent of Pace Analytical Services, Inc.

Pace Analytical™
www.pacelabs.com

Pace Analytical Services, Inc.
7726 Moller Road
Indianapolis, IN 46268
Phone: 317.875.5894
Fax: 317.872.6189

QUALITY CONTROL DATA

Lab Project Number: 5016181
Client Project ID: JCI/Former Stanley Tools

QC Batch: 27872 — Analysis Method: EPA 8260
QC Batch Method: EPA 8260 — Analysis Description: Volatile Organics, TCLP Leach.
Associated Lab Samples: 501203525 501203574 501203624 501203632 501203640 501203657 501203665 501203673

METHOD BLANK: 501215206
Associated Lab Samples: 501203525 501203574 501203624 501203632 501203640 501203657 501203665 501203673

Parameter	Units	Blank Result	Reporting Limit	Footnotes
Vinyl chloride	ug/l	ND	10.	
1,1-Dichloroethene	ug/l	ND	5.0	
Chloroform	ug/l	ND	20.	
1,2-Dichloroethane	ug/l	ND	5.0	
2-Butanone (MEK)	ug/l	ND	100	
Carbon tetrachloride	ug/l	ND	5.0	
Trichloroethene	ug/l	ND	5.0	
Benzene	ug/l	ND	5.0	
Tetrachloroethene	ug/l	ND	5.0	
Chlorobenzene	ug/l	ND	5.0	
Dibromofluoromethane (S)	%	85		
Toluene-d8 (S)	%	101		
4-Bromofluorobenzene (S)	%	100		

LABORATORY CONTROL SAMPLE: 501215214

Parameter	Units	Spike Conc.	LCS Result	LCS % Rec	Footnotes
Vinyl chloride	ug/l	20	16.06	80	
1,1-Dichloroethene	ug/l	20	16.40	82	
Chloroform	ug/l	20	15.67	78	
1,2-Dichloroethane	ug/l	20	19.35	97	
Carbon tetrachloride	ug/l	20	12.26	61	
Trichloroethene	ug/l	20	24.96	125	
Benzene	ug/l	20	19.00	95	
Tetrachloroethene	ug/l	20	9.518	48	
Chlorobenzene	ug/l	20	17.78	89	

REPORT OF LABORATORY ANALYSIS

This report shall not be reproduced, except in full,
without the written consent of Pace Analytical Services, Inc.

Pace Analytical™
www.pacelabs.com

Pace Analytical Services, Inc.
7726 Moller Road
Indianapolis, IN 46268
Phone: 317.875.5894
Fax: 317.872.6189

QUALITY CONTROL DATA

Lab Project Number: 5016181
Client Project ID: JCI/Former Stanley Tools

LABORATORY CONTROL SAMPLE: 501215214

Parameter	Units	Spike Conc.	LCS Result	LCS % Rec	Footnotes
Dibromofluoromethane (S)				83	
Toluene-d8 (S)				105	

MATRIX SPIKE & MATRIX SPIKE DUPLICATE: 501215222 501215230

Parameter	Units	501201156 Result	Spike Conc.	MS Result	MSD Result	MS % Rec	MSD % Rec	RPD	Footnotes
Vinyl chloride	ug/l	0	200.00	158.4	145.5	79	73	8	
1,1-Dichloroethene	ug/l	0	200.00	124.2	164.5	62	82	28	
Chloroform	ug/l	0	200.00	138.8	160.7	69	80	15	
1,2-Dichloroethane	ug/l	0	200.00	167.0	195.3	84	98	16	
Carbon tetrachloride	ug/l	0	200.00	106.7	124.1	53	62	15	
Trichloroethene	ug/l	0	200.00	138.5	160.4	69	80	15	
Benzene	ug/l	0	200.00	168.1	183.4	84	92	9	
Tetrachloroethene	ug/l	0	200.00	77.47	86.86	39	43	11	
Chlorobenzene	ug/l	0	200.00	166.2	175.5	83	88	5	
Dibromofluoromethane (S)						86	90		
Toluene-d8 (S)						102	104		

REPORT OF LABORATORY ANALYSIS

This report shall not be reproduced, except in full,
without the written consent of Pace Analytical Services, Inc.

Pace Analytical
www.pacelabs.com

Pace Analytical Services, Inc.
7726 Moller Road
Indianapolis, IN 46268
Phone: 317.875.5894
Fax: 317.872.6189

QUALITY CONTROL DATA

Lab Project Number: 5016181
Client Project ID: JCI/Former Stanley Tools

QC Batch: 27787 — Analysis Method: EPA 7470
QC Batch Method: EPA 7470 — Analysis Description: Mercury, CVAAS, TCLP Leachate
Associated Lab Samples: 501203525 501203574 501203624 501203632 501203640 501203657 501203665 501203673

METHOD BLANK: 501211007
Associated Lab Samples: 501203525 501203574 501203624 501203632 501203640 501203657 501203665 501203673

Parameter	Units	Blank Result	Reporting Limit	Footnotes
Mercury	ug/l	ND	2.00	

LABORATORY CONTROL SAMPLE: 501210975

Parameter	Units	Spike Conc.	LCS Result	LCS % Rec	Footnotes
Mercury	ug/l	5.000	4.784	96	

LABORATORY CONTROL SAMPLE: 501211015

Parameter	Units	Spike Conc.	LCS Result	LCS % Rec	Footnotes
Mercury	ug/l	5.000	4.827	96	

MATRIX SPIKE & MATRIX SPIKE DUPLICATE: 501210983 501210991

Parameter	Units	501203699 Result	Spike Conc.	MS Result	MSD Result	MS % Rec	MSD % Rec	RPD	Footnotes
Mercury	ug/l	0.00120	5.000	4.350	4.207	87	84	3	

MATRIX SPIKE & MATRIX SPIKE DUPLICATE: 501211023 501211031

Parameter	Units	501201099 Result	Spike Conc.	MS Result	MSD Result	MS % Rec	MSD % Rec	RPD	Footnotes

REPORT OF LABORATORY ANALYSIS

This report shall not be reproduced, except in full,
without the written consent of Pace Analytical Services, Inc.

Pace Analytical™
www.pacelabs.com

Pace Analytical Services, Inc.
7726 Moller Road
Indianapolis, IN 46268
Phone: 317.875.5894
Fax: 317.872.6189

QUALITY CONTROL DATA

Lab Project Number: 5016181
Client Project ID: JCI/Former Stanley Tools

MATRIX SPIKE & MATRIX SPIKE DUPLICATE: 501211023 501211031

Parameter	Units	501201099 Result	Spike Conc.	MS Result	MSD Result	MS % Rec	MSD % Rec	RPD	Footnotes
Mercury	ug/l	0.01410	5.000	4.223	4.348	84	87	3	

MATRIX SPIKE & MATRIX SPIKE DUPLICATE: 501211049 501211056

Parameter	Units	501203525 Result	Spike Conc.	MS Result	MSD Result	MS % Rec	MSD % Rec	RPD	Footnotes
Mercury	ug/l	0.00360	5.000	4.263	4.381	85	88	3	

MATRIX SPIKE & MATRIX SPIKE DUPLICATE: 501211064 501211072

Parameter	Units	501207294 Result	Spike Conc.	MS Result	MSD Result	MS % Rec	MSD % Rec	RPD	Footnotes
Mercury	ug/l	0.00780	5.000	4.318	4.246	86	85	2	

REPORT OF LABORATORY ANALYSIS

This report shall not be reproduced, except in full,
without the written consent of Pace Analytical Services, Inc.

Pace Analytical
www.pacelabs.com

Pace Analytical Services, Inc.
7726 Moller Road
Indianapolis, IN 46268
Phone: 317.875.5894
Fax: 317.872.6189

QUALITY CONTROL DATA

Lab Project Number: 5016181
Client Project ID: JCI/Former Stanley Tools

QC Batch: 27676
QC Batch Method: EPA 3010
Analysis Method: EPA 6010
Analysis Description: RCRA Metals, ICP, TCLP Leach.
Associated Lab Samples: 501203525 501203574 501203624 501203632 501203640 501203657

METHOD BLANK: 501206056
Associated Lab Samples: 501203525 501203574 501203624 501203632 501203640 501203657

Parameter	Units	Blank Result	Reporting Limit	Footnotes
Arsenic	ug/l	ND	50.0	
Barium	ug/l	ND	100.	
Cadmium	ug/l	ND	10.0	
Chromium	ug/l	ND	50.0	
Lead	ug/l	ND	10.0	
Selenium	ug/l	ND	10.0	
Silver	ug/l	ND	50.0	

LABORATORY CONTROL SAMPLE: 501206049

Parameter	Units	Spike Conc.	LCS Result	LCS % Rec	Footnotes
Lead	ug/l	1000	918.2	92	

LABORATORY CONTROL SAMPLE: 501206064

Parameter	Units	Spike Conc.	LCS Result	LCS % Rec	Footnotes
Arsenic	ug/l	1000	1164	116	
Barium	ug/l	1000	972.6	97	
Cadmium	ug/l	100	97.65	98	
Chromium	ug/l	1000	971.0	97	
Lead	ug/l	1000	987.9	99	
Selenium	ug/l	1000	1148	115	
Silver	ug/l	100	104.4	104	

REPORT OF LABORATORY ANALYSIS

This report shall not be reproduced, except in full,
without the written consent of Pace Analytical Services, Inc.

Pace Analytical™
www.pacelabs.com

Pace Analytical Services, Inc.
7726 Moller Road
Indianapolis, IN 46268
Phone: 317.875.5894
Fax: 317.872.6189

QUALITY CONTROL DATA

Lab Project Number: 5016181
Client Project ID: JCI/Former Stanley Tools

MATRIX SPIKE & MATRIX SPIKE DUPLICATE: 501206072 501206080

Parameter	Units	501200463 Result	Spike Conc.	MS Result	MSD Result	MS % Rec	MSD % Rec	RPD	Footnotes
Lead	ug/l	0	1000.00	907.6	866.0	91	87	5	

MATRIX SPIKE & MATRIX SPIKE DUPLICATE: 501206098 501206106

Parameter	Units	501203632 Result	Spike Conc.	MS Result	MSD Result	MS % Rec	MSD % Rec	RPD	Footnotes
Arsenic	ug/l	7.748	1000.00	1172	1157	116	115	1	
Barium	ug/l	585.5	1000.00	1527	1509	94	92	1	
Cadmium	ug/l	3.974	100.00	102.5	100.9	99	97	2	
Chromium	ug/l	60.38	1000.00	1064	1047	100	99	2	
Lead	ug/l	0.04318	1000.00	1018	1003	102	100	2	
Selenium	ug/l	1.422	1000.00	1137	1124	114	112	1	
Silver	ug/l	1.472	100.00	103.4	98.97	102	98	4	

REPORT OF LABORATORY ANALYSIS

This report shall not be reproduced, except in full,
without the written consent of Pace Analytical Services, Inc.

Pace Analytical
www.pacelabs.com

Pace Analytical Services, Inc.
7726 Moller Road
Indianapolis, IN 46268
Phone: 317.875.5894
Fax: 317.872.6189

QUALITY CONTROL DATA

Lab Project Number: 5016181
Client Project ID: JCI/Former Stanley Tools

QC Batch: 27821
QC Batch Method: EPA 3010
Analysis Method: EPA 6010
Analysis Description: RCRA Metals, ICP, TCLP Leach.
Associated Lab Samples: 501203665 501203673

METHOD BLANK: 501212989
Associated Lab Samples: 501203665 501203673

Parameter	Units	Blank Result	Reporting Limit	Footnotes
Arsenic	ug/l	ND	50.0	
Barium	ug/l	ND	100.	
Cadmium	ug/l	ND	10.0	
Chromium	ug/l	ND	50.0	
Lead	ug/l	ND	10.0	
Selenium	ug/l	ND	10.0	
Silver	ug/l	ND	50.0	

LABORATORY CONTROL SAMPLE: 501212930

Parameter	Units	Spike Conc.	LCS Result	LCS % Rec	Footnotes
Arsenic	ug/l	1000	1121	112	
Barium	ug/l	1000	932.9	93	
Cadmium	ug/l	100	102.6	103	
Chromium	ug/l	1000	984.1	98	
Lead	ug/l	1000	998.8	100	
Selenium	ug/l	1000	1037	104	
Silver	ug/l	100	93.15	93	

LABORATORY CONTROL SAMPLE: 501212997

Parameter	Units	Spike Conc.	LCS Result	LCS % Rec	Footnotes
Arsenic	ug/l	1000	1012	101	
Barium	ug/l	1000	938.0	94	
Cadmium	ug/l	100	96.71	97	
Chromium	ug/l	1000	943.0	94	

REPORT OF LABORATORY ANALYSIS

This report shall not be reproduced, except in full,
without the written consent of Pace Analytical Services, Inc.

Pace Analytical™
www.pacelabs.com

Pace Analytical Services, Inc.
7726 Moller Road
Indianapolis, IN 46268
Phone: 317.875.5894
Fax: 317.872.6189

QUALITY CONTROL DATA

Lab Project Number: 5016181
Client Project ID: JCI/Former Stanley Tools

LABORATORY CONTROL SAMPLE: 501212997

Parameter	Units	Spike Conc.	LCS Result	LCS % Rec	Footnotes
Lead	ug/l	1000	940.0	94	
Selenium	ug/l	1000	939.3	94	
Silver	ug/l	100	83.46	84	

MATRIX SPIKE & MATRIX SPIKE DUPLICATE: 501212948 501212955

Parameter	Units	501201099 Result	Spike Conc.	MS Result	MSD Result	MS % Rec	MSD % Rec	RPD	Footnotes
Arsenic	ug/l	21.85	1000.00	1026	1086	100	106	6	
Barium	ug/l	742.6	1000.00	1627	1701	88	96	4	
Cadmium	ug/l	32.65	100.00	123.7	131.5	91	99	6	
Chromium	ug/l	72.50	1000.00	993.5	1034	92	96	4	
Lead	ug/l	8.000	1000.00	952.6	997.4	94	99	5	
Selenium	ug/l	0	1000.00	927.2	973.7	93	97	5	
Silver	ug/l	0	100.00	73.88	97.46	74	98	28	

MATRIX SPIKE & MATRIX SPIKE DUPLICATE: 501212963 501212971

Parameter	Units	501203665 Result	Spike Conc.	MS Result	MSD Result	MS % Rec	MSD % Rec	RPD	Footnotes
Arsenic	ug/l	0	1000.00	1047	1041	105	104	1	
Barium	ug/l	589.2	1000.00	1518	1543	93	95	2	
Cadmium	ug/l	3.400	100.00	103.9	104.8	100	101	1	
Chromium	ug/l	0	1000.00	965.7	968.0	97	97	0	
Lead	ug/l	0	1000.00	1010	1008	101	101	0	
Selenium	ug/l	0	1000.00	998.4	976.7	100	98	2	
Silver	ug/l	0	100.00	73.40	94.64	73	95	25	

MATRIX SPIKE & MATRIX SPIKE DUPLICATE: 501213003 501213011

Parameter	Units	501203699 Result	Spike Conc.	MS Result	MSD Result	MS % Rec	MSD % Rec	RPD	Footnotes
Arsenic	ug/l	0	1000.00	1047	1014	105	102	3	

REPORT OF LABORATORY ANALYSIS

This report shall not be reproduced, except in full,
without the written consent of Pace Analytical Services, Inc.

Pace Analytical™
www.pacelabs.com

Pace Analytical Services, Inc.
7726 Moller Road
Indianapolis, IN 46268
Phone: 317.875.5894
Fax: 317.872.6189

QUALITY CONTROL DATA

Lab Project Number: 5016181
Client Project ID: JCI/Former Stanley Tools

MATRIX SPIKE & MATRIX SPIKE DUPLICATE: 501213003 501213011

Parameter	Units	501203699 Result	Spike Conc.	MS Result	MSD Result	MS % Rec	MSD % Rec	RPD	Footnotes
Barium	ug/l	27.60	1000.00	930.2	922.5	90	90	1	
Cadmium	ug/l	0	100.00	90.44	88.18	90	88	3	
Chromium	ug/l	5584	1000.00	6206	6170	62	59	1	1
Lead	ug/l	0	1000.00	968.9	968.2	97	97	0	
Selenium	ug/l	0	1000.00	948.0	960.8	95	96	1	
Silver	ug/l	0	100.00	106.1	95.52	106	96	11	

REPORT OF LABORATORY ANALYSIS

This report shall not be reproduced, except in full,
without the written consent of Pace Analytical Services, Inc.

Pace Analytical™
www.pacelabs.com

Pace Analytical Services, Inc.
7726 Moller Road
Indianapolis, IN 46268
Phone: 317.875.5894
Fax: 317.872.6189

QUALITY CONTROL DATA

Lab Project Number: 5016181
Client Project ID: JCI/Former Stanley Tools

QC Batch: 27631 Analysis Method: EPA 160.4
QC Batch Method: EPA 160.4 Analysis Description: Total Percent Solids
Associated Lab Samples: 501203525

SAMPLE DUPLICATE: 501204200

Parameter	Units	501202022 Result	DUP Result	RPD	Footnotes
Percent Solids	%	83.60	81.90	2	

REPORT OF LABORATORY ANALYSIS

This report shall not be reproduced, except in full,
without the written consent of Pace Analytical Services, Inc.

Pace Analytical™
www.pacelabs.com

Pace Analytical Services, Inc.
7726 Moller Road
Indianapolis, IN 46268
Phone: 317.875.5894
Fax: 317.872.6189

QUALITY CONTROL DATA

Lab Project Number: 5016181
Client Project ID: JCI/Former Stanley Tools

QC Batch: 27712
QC Batch Method: EPA 376.1
Associated Lab Samples: 501203525

Analysis Method: EPA 376.1
Analysis Description: Sulfide, Soil

METHOD BLANK: 501208268
Associated Lab Samples: 501203525

Parameter	Units	Blank Result	Reporting Limit	Footnotes
Sulfide	mg/kg	ND	10.0	

LABORATORY CONTROL SAMPLE: 501208276

Parameter	Units	Spike Conc.	LCS Result	LCS % Rec	Footnotes
Sulfide	mg/kg	10	10.40	104	

SAMPLE DUPLICATE: 501208284

Parameter	Units	501184634 Result	DUP Result	RPD	Footnotes
Sulfide	mg/kg	ND	ND	NC	

REPORT OF LABORATORY ANALYSIS

This report shall not be reproduced, except in full,
without the written consent of Pace Analytical Services, Inc.

Pace Analytical™
www.pacelabs.com

Pace Analytical Services, Inc.
7726 Moller Road
Indianapolis, IN 46268
Phone: 317.875.5894
Fax: 317.872.6189

QUALITY CONTROL DATA

Lab Project Number: 5016181
Client Project ID: JCI/Former Stanley Tools

QC Batch: 27750 — Analysis Method: EPA 9012
QC Batch Method: EPA 9012 — Analysis Description: Cyanide, Total, Soil
Associated Lab Samples: 501203525

METHOD BLANK: 501209969
Associated Lab Samples: 501203525

Parameter	Units	Blank Result	Reporting Limit	Footnotes
Cyanide	mg/kg	ND	10.0	

LABORATORY CONTROL SAMPLE: 501209993

Parameter	Units	Spike Conc.	LCS Result	LCS % Rec	Footnotes
Cyanide	mg/kg	5.000	6.140	123	

MATRIX SPIKE: 501209977

Parameter	Units	501204705 Result	Spike Conc.	MS Result	MS % Rec	Footnotes
Cyanide	mg/kg	0.2000	5.000	5.140	99	

REPORT OF LABORATORY ANALYSIS

This report shall not be reproduced, except in full,
without the written consent of Pace Analytical Services, Inc.

Pace Analytical™
www.pacelabs.com

Pace Analytical Services, Inc.
7726 Moller Road
Indianapolis, IN 46268
Phone: 317.875.5894
Fax: 317.872.6189

QUALITY CONTROL DATA

Lab Project Number: 5016181
Client Project ID: JCI/Former Stanley Tools

QC Batch: 27764 Analysis Method: EPA 9045
QC Batch Method: EPA 9045 Analysis Description: pH, Soil
Associated Lab Samples: 501203525

SAMPLE DUPLICATE: 501210298

Parameter	Units	501199210 Result	DUP Result	RPD	Footnotes
pH		6.830	6.730	1	

REPORT OF LABORATORY ANALYSIS

This report shall not be reproduced, except in full,
without the written consent of Pace Analytical Services, Inc.

Pace Analytical™
www.pacelabs.com

Pace Analytical Services, Inc.
7726 Moller Road
Indianapolis, IN 46268
Phone: 317.875.5894
Fax: 317.872.6189

Lab Project Number: 5016181
Client Project ID: JCI/Former Stanley Tools

QUALITY CONTROL DATA PARAMETER FOOTNOTES

Consistent with EPA guidelines, unrounded concentrations are displayed and have been used to calculate % Rec and RPD values.

LCS(D)	Laboratory Control Sample (Duplicate)
MS(D)	Matrix Spike (Duplicate)
DUP	Sample Duplicate
ND	Not Detected
NC	Not Calculable
RPD	Relative Percent Difference
(S)	Surrogate
[1]	Due to high analyte concentration the matrix spike and/or matrix spike duplicate do not provide reliable recovery data.

REPORT OF LABORATORY ANALYSIS

This report shall not be reproduced, except in full,
without the written consent of Pace Analytical Services, Inc.

Pace Analytical

CHAIN OF CUSTODY / Analytical Request Document

The Chain-of-Custody is a LEGAL DOCUMENT. All relevant fields must be completed accurately.

558920

Page: 01 of 01

Required Client Information: Section A

Company: ENTACT + ASSOCIATES, LLC.
Address: 1360 N. WOOD DALE RD. STE. A
WOOD DALE, IL. 60191
Phone: 630.616.2100 Fax: 630.616.9203

Required Client Information: Section B

Report To: CAROLINE PANICO
Invoice To: CAROLINE PANICO
P.O.
Project Name: JCI / FORMER STANLEY TOOLS
Project Number: C744

Client Information (Check quote/contract):
Requested Due Date: A.S.A.P. *TAT: RUSH
* Turn around times less than 14 days subject to laboratory and contractual obligations and may result in a Rush Turnaround Surcharge.
Turn Around Time (TAT) in calendar days.

To Be Completed by Pace Analytical and Client: Section C

Quote Reference:
Project Manager:
Project #:
Profile #:

Section D Required Client Information:

SAMPLE ID
One character per box.
(A–Z, 0–9 / .–)
Sample IDs MUST BE UNIQUE

Valid Matrix Codes

MATRIX	CODE
WATER	WT
SOIL	SL
OIL	OL
WIPE	WP
AIR	AR
TISSUE	TS
OTHER	OT

Requested Analysis: pH, Total Solids, Total Cyanide, Total Sulfide, TCLP RCRA 8, Flash Point, PCB's, TCLP VOC's, TCLP SVOC's, PAH's

ITEM #	SAMPLE ID	MATRIX CODE	DATE COLLECTED (mm / dd / yy)	TIME COLLECTED (hh: mm a/p)	# Containers	Preservatives: Unpreserved	H_2SO_4	HNO_3	HCl	NaOH	$Na_2S_2O_3$	pH	Total Solids	Total Cyanide	Total Sulfide	TCLP RCRA 8	Flash Point	PCB's	TCLP VOC's	TCLP SVOC's	PAH's	Remarks / Lab ID (Baker R/O #)
1	WCS-001WP	SL	08.18.01	0900	3	✓						✓	✓	✓	✓	✓	✓	✓	✓	✓	✓	BKRU 026506
2	WCS-002	SL	08.18.01	0910	2	✓										✓		✓	✓	✓	✓	BKRU 025484
3	WCS-003	SL	08.18.01	0915	2	✓										✓		✓	✓	✓	✓	BKRU 025940
4	WCS-004	SL	08.18.01	0920	2	✓										✓		✓	✓	✓	✓	BKRU 026092
5	WCS-005	SL	08-18-01	0925	2	✓										✓		✓	✓	✓	✓	BKRU 025822
6	WCS-005FD	SL	08-18-01	0930	2	✓										✓		✓	✓	✓	✓	BKRU 025822
7	WCS-006	SL	08-18-01	0935	2	✓										✓		✓	✓	✓	✓	BKRU 025246
8	WCS-007	SL	08-18-01	0940	2	✓										✓		✓	✓	✓	✓	BKRU 025290
9																						
10																						
11																						
12																						

Sample Condition		Sample Notes	Item No.	Relinquished By / Company	Date	Time	Accepted By / Company	Date	Time
Temp in °C:				Brian Morgan / ENTACT + ASSOC.	8.17				
Received on ICE:	Y / N								
Sealed Cooler:	Y / N								
Samples Intact:	Y / N								

Additional Comments:

SAMPLER NAME AND SIGNATURE

PRINT Name of SAMPLER: BRIAN MORGAN

SIGNATURE of SAMPLER:

DATE Signed: (MM / DD / YY) 08.17.01

ORIGINAL

SEE REVERSE SIDE FOR INSTRUCTIONS

Pace Analytical™
www.pacelabs.com

Pace Analytical Services, Inc.
7726 Moller Road
Indianapolis, IN 46268
Phone: 317.875.5894
Fax: 317.872.6189

September 05, 2001

Ms. Caroline Panico
ENTACT
1360 N. Wood Dale Rd.
Suite A
Wood Dale, IL 60191

RE: Lab Project Number: 5016256
Client Project ID: Stanley Tools/C744

Dear Ms. Panico:

Enclosed are the analytical results for sample(s)received by the laboratory on August 24, 2001. If you have any questions concerning this report, please feel free to contact me.

Sincerely,

Jill Kofoed

Jill Kofoed
Project Manager

Enclosures

REPORT OF LABORATORY ANALYSIS

This report shall not be reproduced, except in full,
without the written consent of Pace Analytical Services, Inc.

Pace Analytical
www.pacelabs.com

Pace Analytical Services, Inc.
7726 Moller Road
Indianapolis, IN 46268
Phone: 317.875.5894
Fax: 317.872.6189

ENTACT
1360 N. Wood Dale Rd.
Suite A
Wood Dale, IL 60191

Lab Project Number: 5016256
Client Project ID: Stanley Tools/C744

Attn: Ms. Caroline Panico
Phone: 630-616-2100

Solid results are reported on a wet weight basis

Lab Sample No: 501212641 Project Sample Number: 5016256-001 Date Collected: 08/23/01 09:30
Client Sample ID: WCS-008 Matrix: Soil Date Received: 08/24/01 09:40

Parameters	Results	Units	Report Limit	Analyzed		CAS No.	Ftnote	Reg Limit
Metals								
RCRA Metals, ICP, TCLP Leach.	Prep/Method: EPA 3010 / EPA 6010							
Arsenic	ND	mg/l	0.0500	08/29/01 20:55	HEB	7440-38-2		
Barium	0.624	mg/l	0.100	08/29/01 20:55	HEB	7440-39-3		
Cadmium	ND	mg/l	0.0100	08/29/01 20:55	HEB	7440-43-9		
Chromium	ND	mg/l	0.0500	08/29/01 20:55	HEB	7440-47-3		
Lead	ND	mg/l	0.0100	08/29/01 20:55	HEB	7439-92-1		
Selenium	ND	mg/l	0.0100	08/29/01 20:55	HEB	7782-49-2		
Silver	ND	mg/l	0.0500	08/29/01 20:55	HEB	7440-22-4		
Date Digested				08/28/01				
RCRA Metals, ICP, TCLP Leach.	Prep/Method: EPA 1311 / EPA 6010							
Date Digested				08/27/01				
Mercury, CVAAS, TCLP Leachate	Prep/Method: EPA 7470 / EPA 7470							
Mercury	ND	ug/l	2.00	08/28/01 21:14	HEB	7439-97-6		
GC/MS Semivolatiles								
Semivolatile Organics	Prep/Method: EPA 3550 Sonication / EPA 8270							
Naphthalene	ND	ug/kg	330	08/28/01 20:03	SRS	91-20-3		
Acenaphthylene	ND	ug/kg	330	08/28/01 20:03	SRS	208-96-8		
Acenaphthene	ND	ug/kg	330	08/28/01 20:03	SRS	83-32-9		
Fluorene	ND	ug/kg	330	08/28/01 20:03	SRS	86-73-7		
Phenanthrene	ND	ug/kg	330	08/28/01 20:03	SRS	85-01-8		
Anthracene	ND	ug/kg	330	08/28/01 20:03	SRS	120-12-7		
Fluoranthene	ND	ug/kg	330	08/28/01 20:03	SRS	206-44-0		
Pyrene	ND	ug/kg	330	08/28/01 20:03	SRS	129-00-0		

REPORT OF LABORATORY ANALYSIS

This report shall not be reproduced, except in full,
without the written consent of Pace Analytical Services, Inc.

Pace Analytical
www.pacelabs.com

Pace Analytical Services, Inc.
7726 Moller Road
Indianapolis, IN 46268
Phone: 317.875.5894
Fax: 317.872.6189

Lab Project Number: 5016256
Client Project ID: Stanley Tools/C744

Lab Sample No: 501212641 | Project Sample Number: 5016256-001 | Date Collected: 08/23/01 09:30
Client Sample ID: WCS-008 | Matrix: Soil | Date Received: 08/24/01 09:40

Parameters	Results	Units	Report Limit	Analyzed		CAS No.	Ftnote	Reg Limit
Benzo(a)anthracene	ND	ug/kg	330	08/28/01 20:03	SRS	56-55-3		
Chrysene	ND	ug/kg	330	08/28/01 20:03	SRS	218-01-9		
Benzo(b)fluoranthene	ND	ug/kg	330	08/28/01 20:03	SRS	205-99-2		
Benzo(k)fluoranthene	ND	ug/kg	330	08/28/01 20:03	SRS	207-08-9		
Benzo(a)pyrene	ND	ug/kg	330	08/28/01 20:03	SRS	50-32-8		
Indeno(1,2,3-cd)pyrene	ND	ug/kg	330	08/28/01 20:03	SRS	193-39-5		
Benzo(g,h,i)perylene	ND	ug/kg	330	08/28/01 20:03	SRS	191-24-2		
Dibenz(a,h)anthracene	ND	ug/kg	330	08/28/01 20:03	SRS	53-70-3		
2-Methylnaphthalene	ND	ug/kg	330	08/28/01 20:03	SRS	91-57-6		
Nitrobenzene-d5 (S)	76	%		08/28/01 20:03	SRS	4165-60-0		
2-Fluorobiphenyl (S)	75	%		08/28/01 20:03	SRS	321-60-8		
Terphenyl-d14 (S)	82	%		08/28/01 20:03	SRS	1718-51-0		
Date Extracted				08/27/01				
GC Semivolatiles								
PCBs in Soil by 8082	Prep/Method: EPA 3550 / EPA 8082							
PCB-1016 (Aroclor 1016)	ND	ug/kg	160	08/29/01 16:48	MED	12674-11-2		
PCB-1221 (Aroclor 1221)	ND	ug/kg	160	08/29/01 16:48	MED	11104-28-2		
PCB-1232 (Aroclor 1232)	ND	ug/kg	160	08/29/01 16:48	MED	11141-16-5		
PCB-1242 (Aroclor 1242)	ND	ug/kg	160	08/29/01 16:48	MED	53469-21-9		
PCB-1248 (Aroclor 1248)	1400	ug/kg	160	08/29/01 16:48	MED	12672-29-6		
PCB-1254 (Aroclor 1254)	ND	ug/kg	160	08/29/01 16:48	MED	11097-69-1		
PCB-1260 (Aroclor 1260)	ND	ug/kg	160	08/29/01 16:48	MED	11096-82-5		
Decachlorobiphenyl (S)	0	%		08/29/01 16:48	MED	2051-24-3		
Tetrachloro-m-xylene (S)	0	%		08/29/01 16:48	MED	877-09-8	1	
Date Extracted				08/27/01				
GC/MS Volatiles								
Volatile Organics, TCLP Leach.	Prep/Method: EPA 8260 / EPA 8260							
Vinyl chloride	ND	ug/l	100	09/01/01 04:35	CAC	75-01-4		
1,1-Dichloroethene	ND	ug/l	50.	09/01/01 04:35	CAC	75-35-4		
Chloroform	ND	ug/l	200	09/01/01 04:35	CAC	67-66-3		
1,2-Dichloroethane	ND	ug/l	50.	09/01/01 04:35	CAC	107-06-2		
2-Butanone (MEK)	ND	ug/l	1000	09/01/01 04:35	CAC	78-93-3		
Carbon tetrachloride	ND	ug/l	50.	09/01/01 04:35	CAC	56-23-5		

REPORT OF LABORATORY ANALYSIS

This report shall not be reproduced, except in full,
without the written consent of Pace Analytical Services, Inc.

Pace Analytical
www.pacelabs.com

Pace Analytical Services, Inc.
7726 Moller Road
Indianapolis, IN 46268
Phone: 317.875.5894
Fax: 317.872.6189

Lab Project Number: 5016256
Client Project ID: Stanley Tools/C744

Lab Sample No: 501212641 Project Sample Number: 5016256-001 Date Collected: 08/23/01 09:30
Client Sample ID: WCS-008 Matrix: Soil Date Received: 08/24/01 09:40

Parameters	Results	Units	Report Limit	Analyzed		CAS No.	Ftnote	Reg Limit
Trichloroethene	ND	ug/l	50.	09/01/01 04:35	CAC	79-01-6		
Benzene	ND	ug/l	50.	09/01/01 04:35	CAC	71-43-2		
Tetrachloroethene	ND	ug/l	50.	09/01/01 04:35	CAC	127-18-4		
Chlorobenzene	ND	ug/l	50.	09/01/01 04:35	CAC	108-90-7		
Dibromofluoromethane (S)	94	%		09/01/01 04:35	CAC			
Toluene-d8 (S)	102	%		09/01/01 04:35	CAC	2037-26-5		
4-Bromofluorobenzene (S)	94	%		09/01/01 04:35	CAC	460-00-4		

REPORT OF LABORATORY ANALYSIS

This report shall not be reproduced, except in full,
without the written consent of Pace Analytical Services, Inc.

Pace Analytical
www.pacelabs.com

Pace Analytical Services, Inc.
7726 Moller Road
Indianapolis, IN 46268
Phone: 317.875.5894
Fax: 317.872.6189

Lab Project Number: 5016256
Client Project ID: Stanley Tools/C744

Lab Sample No: 501212658 | Project Sample Number: 5016256-002 | Date Collected: 08/23/01 09:45
Client Sample ID: WCS-009 | Matrix: Soil | Date Received: 08/24/01 09:40

Parameters	Results	Units	Report Limit	Analyzed		CAS No.	Ftnote	Reg Limit
Metals								
RCRA Metals, ICP, TCLP Leach.	Prep/Method: EPA 1311 / EPA 6010							
Date Digested				08/27/01				
RCRA Metals, ICP, TCLP Leach.	Prep/Method: EPA 3010 / EPA 6010							
Arsenic	ND	mg/l	0.0500	08/29/01 20:55	HEB	7440-38-2		
Barium	0.550	mg/l	0.100	08/29/01 20:55	HEB	7440-39-3		
Cadmium	ND	mg/l	0.0100	08/29/01 20:55	HEB	7440-43-9		
Chromium	ND	mg/l	0.0500	08/29/01 20:55	HEB	7440-47-3		
Lead	ND	mg/l	0.0100	08/29/01 20:55	HEB	7439-92-1		
Selenium	0.0110	mg/l	0.0100	08/29/01 20:55	HEB	7782-49-2		
Silver	ND	mg/l	0.0500	08/29/01 20:55	HEB	7440-22-4		
Date Digested				08/28/01				
Mercury, CVAAS, TCLP Leachate	Prep/Method: EPA 7470 / EPA 7470							
Mercury	ND	ug/l	2.00	08/28/01 21:14	HEB	7439-97-6		
GC/MS Semivolatiles								
Semivolatile Organics	Prep/Method: EPA 3550 Sonication / EPA 8270							
Naphthalene	ND	ug/kg	330	08/28/01 18:26	SRS	91-20-3		
Acenaphthylene	ND	ug/kg	330	08/28/01 18:26	SRS	208-96-8		
Acenaphthene	ND	ug/kg	330	08/28/01 18:26	SRS	83-32-9		
Fluorene	ND	ug/kg	330	08/28/01 18:26	SRS	86-73-7		
Phenanthrene	ND	ug/kg	330	08/28/01 18:26	SRS	85-01-8		
Anthracene	ND	ug/kg	330	08/28/01 18:26	SRS	120-12-7		
Fluoranthene	ND	ug/kg	330	08/28/01 18:26	SRS	206-44-0		
Pyrene	ND	ug/kg	330	08/28/01 18:26	SRS	129-00-0		
Benzo(a)anthracene	ND	ug/kg	330	08/28/01 18:26	SRS	56-55-3		
Chrysene	ND	ug/kg	330	08/28/01 18:26	SRS	218-01-9		
Benzo(b)fluoranthene	ND	ug/kg	330	08/28/01 18:26	SRS	205-99-2		
Benzo(k)fluoranthene	ND	ug/kg	330	08/28/01 18:26	SRS	207-08-9		
Benzo(a)pyrene	ND	ug/kg	330	08/28/01 18:26	SRS	50-32-8		
Indeno(1,2,3-cd)pyrene	ND	ug/kg	330	08/28/01 18:26	SRS	193-39-5		
Benzo(g,h,i)perylene	ND	ug/kg	330	08/28/01 18:26	SRS	191-24-2		
Dibenz(a,h)anthracene	ND	ug/kg	330	08/28/01 18:26	SRS	53-70-3		

REPORT OF LABORATORY ANALYSIS

This report shall not be reproduced, except in full,
without the written consent of Pace Analytical Services, Inc.

Pace Analytical
www.pacelabs.com

Pace Analytical Services, Inc.
7726 Moller Road
Indianapolis, IN 46268
Phone: 317.875.5894
Fax: 317.872.6189

Lab Project Number: 5016256
Client Project ID: Stanley Tools/C744

Lab Sample No: 501212658 Project Sample Number: 5016256-002 Date Collected: 08/23/01 09:45
Client Sample ID: WCS-009 Matrix: Soil Date Received: 08/24/01 09:40

Parameters	Results	Units	Report Limit	Analyzed		CAS No.	Ftnote	Reg Limit
2-Methylnaphthalene	ND	ug/kg	330	08/28/01 18:26	SRS	91-57-6		
Nitrobenzene-d5 (S)	86	%		08/28/01 18:26	SRS	4165-60-0		
2-Fluorobiphenyl (S)	80	%		08/28/01 18:26	SRS	321-60-8		
Terphenyl-d14 (S)	84	%		08/28/01 18:26	SRS	1718-51-0		
Date Extracted				08/27/01				
GC Semivolatiles								
PCBs in Soil by 8082	Prep/Method:	EPA 3550 / EPA 8082						
PCB-1016 (Aroclor 1016)	ND	ug/kg	160	08/29/01 17:17	MED	12674-11-2		
PCB-1221 (Aroclor 1221)	ND	ug/kg	160	08/29/01 17:17	MED	11104-28-2		
PCB-1232 (Aroclor 1232)	ND	ug/kg	160	08/29/01 17:17	MED	11141-16-5		
PCB-1242 (Aroclor 1242)	ND	ug/kg	160	08/29/01 17:17	MED	53469-21-9		
PCB-1248 (Aroclor 1248)	920	ug/kg	160	08/29/01 17:17	MED	12672-29-6		
PCB-1254 (Aroclor 1254)	ND	ug/kg	160	08/29/01 17:17	MED	11097-69-1		
PCB-1260 (Aroclor 1260)	ND	ug/kg	160	08/29/01 17:17	MED	11096-82-5		
Decachlorobiphenyl (S)	0	%		08/29/01 17:17	MED	2051-24-3		
Tetrachloro-m-xylene (S)	0	%		08/29/01 17:17	MED	877-09-8	1	
Date Extracted				08/27/01				
GC/MS Volatiles								
Volatile Organics, TCLP Leach.	Prep/Method:	EPA 8260 / EPA 8260						
Vinyl chloride	ND	ug/l	100	09/01/01 04:03	CAC	75-01-4		
1,1-Dichloroethene	ND	ug/l	50.	09/01/01 04:03	CAC	75-35-4		
Chloroform	ND	ug/l	200	09/01/01 04:03	CAC	67-66-3		
1,2-Dichloroethane	ND	ug/l	50.	09/01/01 04:03	CAC	107-06-2		
2-Butanone (MEK)	ND	ug/l	1000	09/01/01 04:03	CAC	78-93-3		
Carbon tetrachloride	ND	ug/l	50.	09/01/01 04:03	CAC	56-23-5		
Trichloroethene	ND	ug/l	50.	09/01/01 04:03	CAC	79-01-6		
Benzene	ND	ug/l	50.	09/01/01 04:03	CAC	71-43-2		
Tetrachloroethene	ND	ug/l	50.	09/01/01 04:03	CAC	127-18-4		
Chlorobenzene	ND	ug/l	50.	09/01/01 04:03	CAC	108-90-7		
Dibromofluoromethane (S)	94	%		09/01/01 04:03	CAC			
Toluene-d8 (S)	102	%		09/01/01 04:03	CAC	2037-26-5		
4-Bromofluorobenzene (S)	94	%		09/01/01 04:03	CAC	460-00-4		

REPORT OF LABORATORY ANALYSIS

This report shall not be reproduced, except in full,
without the written consent of Pace Analytical Services, Inc.

Pace Analytical™
www.pacelabs.com

Pace Analytical Services, Inc.
7726 Moller Road
Indianapolis, IN 46268
Phone: 317.875.5894
Fax: 317.872.6189

Lab Project Number: 5016256
Client Project ID: Stanley Tools/C744

Lab Sample No: 501215248 Project Sample Number: 5016256-004 Date Collected: 08/23/01 09:30
Client Sample ID: WCS-008 (TCLP SVOC) Matrix: Soil Date Received: 08/24/01 09:40

Parameters	Results	Units	Report Limit	Analyzed		CAS No.	Ftnote	Reg Limit
Metals								
Semivolatile Organics, TCLP	Prep/Method: EPA 1311 / EPA 8270							
Date Digested				08/28/01				
GC/MS Semivolatiles								
Semivolatile Organics, TCLP	Prep/Method: EPA 3510 / EPA 8270							
1,4-Dichlorobenzene	ND	ug/l	100	09/02/01 02:03	SRS	106-46-7		
2-Methylphenol (o-Cresol)	ND	ug/l	100	09/02/01 02:03	SRS	95-48-7		
3&4-Methylphenol	ND	ug/l	200	09/02/01 02:03	SRS			
Nitrobenzene	ND	ug/l	100	09/02/01 02:03	SRS	98-95-3		
Hexachloro-1,3-butadiene	ND	ug/l	100	09/02/01 02:03	SRS	87-68-3		
2,4,6-Trichlorophenol	ND	ug/l	100	09/02/01 02:03	SRS	88-06-2		
2,4,5-Trichlorophenol	ND	ug/l	500	09/02/01 02:03	SRS	95-95-4		
2,4-Dinitrotoluene	ND	ug/l	100	09/02/01 02:03	SRS	121-14-2		
Hexachlorobenzene	ND	ug/l	100	09/02/01 02:03	SRS	118-74-1		
Pentachlorophenol	ND	ug/l	500	09/02/01 02:03	SRS	87-86-5		
Pyridine	ND	ug/l	100	09/02/01 02:03	SRS	110-86-1		
Hexachloroethane	ND	ug/l	100	09/02/01 02:03	SRS	67-72-1		
Nitrobenzene-d5 (S)	81	%		09/02/01 02:03	SRS	4165-60-0		
2-Fluorobiphenyl (S)	84	%		09/02/01 02:03	SRS	321-60-8		
Terphenyl-d14 (S)	109	%		09/02/01 02:03	SRS	1718-51-0		
Phenol-d6 (S)	17	%		09/02/01 02:03	SRS	13127-88-3		
2-Fluorophenol (S)	40	%		09/02/01 02:03	SRS	367-12-4		
2,4,6-Tribromophenol (S)	87	%		09/02/01 02:03	SRS			
Date Extracted				08/30/01				

REPORT OF LABORATORY ANALYSIS
This report shall not be reproduced, except in full,
without the written consent of Pace Analytical Services, Inc.

Pace Analytical
www.pacelabs.com

Pace Analytical Services, Inc.
7726 Moller Road
Indianapolis, IN 46268
Phone: 317.875.5894
Fax: 317.872.6189

Lab Project Number: 5016256
Client Project ID: Stanley Tools/C744

Lab Sample No: 501215255 Project Sample Number: 5016256-005 Date Collected: 08/23/01 09:45
Client Sample ID: WCS-009 (TCLP SVOC) Matrix: Soil Date Received: 08/24/01 09:40

Parameters	Results	Units	Report Limit	Analyzed		CAS No.	Ftnote	Reg Limit
Metals								
Semivolatile Organics, TCLP	Prep/Method: EPA 1311 / EPA 8270							
Date Digested				08/28/01				
GC/MS Semivolatiles								
Semivolatile Organics, TCLP	Prep/Method: EPA 3510 / EPA 8270							
1,4-Dichlorobenzene	ND	ug/l	100	09/02/01 04:46	SRS	106-46-7		
2-Methylphenol (o-Cresol)	ND	ug/l	100	09/02/01 04:46	SRS	95-48-7		
3&4-Methylphenol	ND	ug/l	200	09/02/01 04:46	SRS			
Nitrobenzene	ND	ug/l	100	09/02/01 04:46	SRS	98-95-3		
Hexachloro-1,3-butadiene	ND	ug/l	100	09/02/01 04:46	SRS	87-68-3		
2,4,6-Trichlorophenol	ND	ug/l	100	09/02/01 04:46	SRS	88-06-2		
2,4,5-Trichlorophenol	ND	ug/l	500	09/02/01 04:46	SRS	95-95-4		
2,4-Dinitrotoluene	ND	ug/l	100	09/02/01 04:46	SRS	121-14-2		
Hexachlorobenzene	ND	ug/l	100	09/02/01 04:46	SRS	118-74-1		
Pentachlorophenol	ND	ug/l	500	09/02/01 04:46	SRS	87-86-5		
Pyridine	ND	ug/l	100	09/02/01 04:46	SRS	110-86-1		
Hexachloroethane	ND	ug/l	100	09/02/01 04:46	SRS	67-72-1		
Nitrobenzene-d5 (S)	72	%		09/02/01 04:46	SRS	4165-60-0		
2-Fluorobiphenyl (S)	69	%		09/02/01 04:46	SRS	321-60-8		
Terphenyl-d14 (S)	101	%		09/02/01 04:46	SRS	1718-51-0		
Phenol-d6 (S)	0	%		09/02/01 04:46	SRS	13127-88-3	3	
2-Fluorophenol (S)	0	%		09/02/01 04:46	SRS	367-12-4	3	
2,4,6-Tribromophenol (S)	6	%		09/02/01 04:46	SRS			
Date Extracted				08/30/01				

REPORT OF LABORATORY ANALYSIS
This report shall not be reproduced, except in full,
without the written consent of Pace Analytical Services, Inc.

Pace Analytical
www.pacelabs.com

Pace Analytical Services, Inc.
7726 Moller Road
Indianapolis, IN 46268
Phone: 317.875.5894
Fax: 317.872.6189

Lab Project Number: 5016256
Client Project ID: Stanley Tools/C744

Lab Sample No: 501222046 | Project Sample Number: 5016256-006 | Date Collected: 08/23/01 09:30
Client Sample ID: WCS-008 DUP | Matrix: Soil | Date Received: 08/24/01 09:40

Parameters	Results	Units	Report Limit	Analyzed		CAS No.	Ftnote	Reg Limit
Metals								
Semivolatile Organics, TCLP	Prep/Method: EPA 1311 / EPA 8270							
Date Digested				08/28/01				
GC/MS Semivolatiles								
Semivolatile Organics, TCLP	Prep/Method: EPA 3510 / EPA 8270							
1,4-Dichlorobenzene	ND	ug/l	100	09/02/01 01:30	SRS	106-46-7		
2-Methylphenol (o-Cresol)	ND	ug/l	100	09/02/01 01:30	SRS	95-48-7		
3&4-Methylphenol	ND	ug/l	200	09/02/01 01:30	SRS			
Nitrobenzene	ND	ug/l	100	09/02/01 01:30	SRS	98-95-3		
Hexachloro-1,3-butadiene	ND	ug/l	100	09/02/01 01:30	SRS	87-68-3		
2,4,6-Trichlorophenol	ND	ug/l	100	09/02/01 01:30	SRS	88-06-2		
2,4,5-Trichlorophenol	ND	ug/l	500	09/02/01 01:30	SRS	95-95-4		
2,4-Dinitrotoluene	ND	ug/l	100	09/02/01 01:30	SRS	121-14-2		
Hexachlorobenzene	ND	ug/l	100	09/02/01 01:30	SRS	118-74-1		
Pentachlorophenol	ND	ug/l	500	09/02/01 01:30	SRS	87-86-5		
Pyridine	ND	ug/l	100	09/02/01 01:30	SRS	110-86-1		
Hexachloroethane	ND	ug/l	100	09/02/01 01:30	SRS	67-72-1		
Nitrobenzene-d5 (S)	85	%		09/02/01 01:30	SRS	4165-60-0		
2-Fluorobiphenyl (S)	90	%		09/02/01 01:30	SRS	321-60-8		
Terphenyl-d14 (S)	113	%		09/02/01 01:30	SRS	1718-51-0		
Phenol-d6 (S)	22	%		09/02/01 01:30	SRS	13127-88-3		
2-Fluorophenol (S)	51	%		09/02/01 01:30	SRS	367-12-4		
2,4,6-Tribromophenol (S)	94	%		09/02/01 01:30	SRS			
Date Extracted				08/30/01				

REPORT OF LABORATORY ANALYSIS

This report shall not be reproduced, except in full,
without the written consent of Pace Analytical Services, Inc.

Pace Analytical™
www.pacelabs.com

Pace Analytical Services, Inc.
7726 Moller Road
Indianapolis, IN 46268
Phone: 317.875.5894
Fax: 317.872.6189

Lab Project Number: 5016256
Client Project ID: Stanley Tools/C744

Lab Sample No: 501222053 Project Sample Number: 5016256-007 Date Collected: 08/23/01 09:45
Client Sample ID: WCS-009 DUP Matrix: Soil Date Received: 08/24/01 09:40

Parameters	Results	Units	Report Limit	Analyzed		CAS No.	Ftnote	Reg Limit
Metals								
Semivolatile Organics, TCLP	Prep/Method: EPA 1311 / EPA 8270							
Date Digested				08/27/01				
GC/MS Semivolatiles								
Semivolatile Organics, TCLP	Prep/Method: EPA 3510 / EPA 8270							
1,4-Dichlorobenzene	ND	ug/l	100	09/02/01 04:13	SRS	106-46-7		
2-Methylphenol (o-Cresol)	ND	ug/l	100	09/02/01 04:13	SRS	95-48-7		
3&4-Methylphenol	ND	ug/l	200	09/02/01 04:13	SRS			
Nitrobenzene	ND	ug/l	100	09/02/01 04:13	SRS	98-95-3		
Hexachloro-1,3-butadiene	ND	ug/l	100	09/02/01 04:13	SRS	87-68-3		
2,4,6-Trichlorophenol	ND	ug/l	100	09/02/01 04:13	SRS	88-06-2		
2,4,5-Trichlorophenol	ND	ug/l	500	09/02/01 04:13	SRS	95-95-4		
2,4-Dinitrotoluene	ND	ug/l	100	09/02/01 04:13	SRS	121-14-2		
Hexachlorobenzene	ND	ug/l	100	09/02/01 04:13	SRS	118-74-1		
Pentachlorophenol	ND	ug/l	500	09/02/01 04:13	SRS	87-86-5		
Pyridine	ND	ug/l	100	09/02/01 04:13	SRS	110-86-1		
Hexachloroethane	ND	ug/l	100	09/02/01 04:13	SRS	67-72-1		
Nitrobenzene-d5 (S)	81	%		09/02/01 04:13	SRS	4165-60-0		
2-Fluorobiphenyl (S)	75	%		09/02/01 04:13	SRS	321-60-8		
Terphenyl-d14 (S)	112	%		09/02/01 04:13	SRS	1718-51-0		
Phenol-d6 (S)	0	%		09/02/01 04:13	SRS	13127-88-3		
2-Fluorophenol (S)	1	%		09/02/01 04:13	SRS	367-12-4		
2,4,6-Tribromophenol (S)	11	%		09/02/01 04:13	SRS			
Date Extracted				08/30/01				

REPORT OF LABORATORY ANALYSIS

This report shall not be reproduced, except in full,
without the written consent of Pace Analytical Services, Inc.

Pace Analytical™
www.pacelabs.com

Pace Analytical Services, Inc.
7726 Moller Road
Indianapolis, IN 46268
Phone: 317.875.5894
Fax: 317.872.6189

Lab Project Number: 5016256
Client Project ID: Stanley Tools/C744

PARAMETER FOOTNOTES

ND	Not Detected
NC	Not Calculable
(S)	Surrogate
[1]	Surrogate standards were not recovered due to sample dilution.
[2]	Detected but below the PRL; therefore, result is an estimated concentration (CLP J-Flag).
[3]	Surrogate recovery outside of acceptance window confirmed as a matrix effect by the analysis of a duplicate or MS/MSD on this sample.

REPORT OF LABORATORY ANALYSIS

This report shall not be reproduced, except in full,
without the written consent of Pace Analytical Services, Inc.

Pace Analytical
www.pacelabs.com

Pace Analytical Services, Inc.
7726 Moller Road
Indianapolis, IN 46268
Phone: 317.875.5894
Fax: 317.872.6189

QUALITY CONTROL DATA

Lab Project Number: 5016256
Client Project ID: Stanley Tools/C744

QC Batch: 27820 Analysis Method: EPA 8082
QC Batch Method: EPA 3550 Analysis Description: PCBs in Soil by 8082
Associated Lab Samples: 501212641 501212658

METHOD BLANK: 501212732
Associated Lab Samples: 501212641 501212658

Parameter	Units	Blank Result	Reporting Limit	Footnotes
PCB-1016 (Aroclor 1016)	ug/kg	ND	33.	
PCB-1221 (Aroclor 1221)	ug/kg	ND	33.	
PCB-1232 (Aroclor 1232)	ug/kg	ND	33.	
PCB-1242 (Aroclor 1242)	ug/kg	ND	33.	
PCB-1248 (Aroclor 1248)	ug/kg	ND	33.	
PCB-1254 (Aroclor 1254)	ug/kg	ND	33.	
PCB-1260 (Aroclor 1260)	ug/kg	ND	33.	
Decachlorobiphenyl (S)	%	111		
Tetrachloro-m-xylene (S)	%	129		

LABORATORY CONTROL SAMPLE: 501212765

Parameter	Units	Spike Conc.	LCS Result	LCS % Rec	Footnotes
PCB-1016 (Aroclor 1016)	ug/kg	166.7	138.3	83	
PCB-1260 (Aroclor 1260)	ug/kg	166.7	172.3	103	
Decachlorobiphenyl (S)				112	
Tetrachloro-m-xylene (S)				131	

MATRIX SPIKE & MATRIX SPIKE DUPLICATE: 501212740 501212757

Parameter	Units	501210553 Result	Spike Conc.	MS Result	MSD Result	MS % Rec	MSD % Rec	RPD	Footnotes
PCB-1016 (Aroclor 1016)	ug/kg	0	166.70	121.3	132.0	73	79	8	
PCB-1260 (Aroclor 1260)	ug/kg	0	166.70	143.7	151.0	86	91	5	
Decachlorobiphenyl (S)						103	102		
Tetrachloro-m-xylene (S)						132	131		

REPORT OF LABORATORY ANALYSIS
This report shall not be reproduced, except in full,
without the written consent of Pace Analytical Services, Inc.

Pace Analytical Services, Inc.
7726 Moller Road
Indianapolis, IN 46268
Phone: 317.875.5894
Fax: 317.872.6189

QUALITY CONTROL DATA

Lab Project Number: 5016256
Client Project ID: Stanley Tools/C744

QC Batch: 27953
QC Batch Method: EPA 3510
Analysis Method: EPA 8082
Analysis Description: PCBs in Water by 8082
Associated Lab Samples: 501212666

METHOD BLANK: 501219893
Associated Lab Samples: 501212666

Parameter	Units	Blank Result	Reporting Limit	Footnotes
PCB-1016 (Aroclor 1016)	ug/l	ND	1.0	
PCB-1221 (Aroclor 1221)	ug/l	ND	1.0	
PCB-1232 (Aroclor 1232)	ug/l	ND	1.0	
PCB-1242 (Aroclor 1242)	ug/l	ND	1.0	
PCB-1248 (Aroclor 1248)	ug/l	ND	1.0	
PCB-1254 (Aroclor 1254)	ug/l	ND	1.0	
PCB-1260 (Aroclor 1260)	ug/l	ND	1.0	
Decachlorobiphenyl (S)	%	109		
Tetrachloro-m-xylene (S)	%	115		

LABORATORY CONTROL SAMPLE: 501219901

Parameter	Units	Spike Conc.	LCS Result	LCS % Rec	Footnotes
PCB-1016 (Aroclor 1016)	ug/l	5.000	3.630	73	
PCB-1260 (Aroclor 1260)	ug/l	5.000	5.480	110	
Decachlorobiphenyl (S)				108	
Tetrachloro-m-xylene (S)				111	

REPORT OF LABORATORY ANALYSIS

This report shall not be reproduced, except in full,
without the written consent of Pace Analytical Services, Inc.

Pace Analytical
www.pacelabs.com

Pace Analytical Services, Inc.
7726 Moller Road
Indianapolis, IN 46268
Phone: 317.875.5894
Fax: 317.872.6189

Lab Project Number: 5016256
Client Project ID: Stanley Tools/C744

Lab Sample No: 501212666 | Project Sample Number: 5016256-003 | Date Collected: 08/23/01 10:15
Client Sample ID: WCW-001 | Matrix: Water | Date Received: 08/24/01 09:40

Parameters	Results	Units	Report Limit	Analyzed		CAS No.	Ftnote	Reg Limit
Metals								
Metals, ICP, Trace	Prep/Method: EPA 3010 / EPA 6010							
Arsenic	0.0586	mg/l	0.0500	08/30/01 23:01	HEB	7440-38-2		
Barium	0.426	mg/l	0.100	08/30/01 23:01	HEB	7440-39-3		
Cadmium	0.00966	mg/l	0.0100	08/30/01 23:01	HEB	7440-43-9	2	
Chromium	1.94	mg/l	0.0500	08/30/01 23:01	HEB	7440-47-3		
Lead	0.458	mg/l	0.0100	08/30/01 23:01	HEB	7439-92-1		
Selenium	ND	mg/l	0.0100	08/30/01 23:01	HEB	7782-49-2		
Silver	ND	mg/l	0.0500	08/30/01 23:01	HEB	7440-22-4		
Date Digested				08/27/01				
Mercury, CVAAS	Prep/Method: EPA 7470 / EPA 7470							
Mercury	ND	mg/l	0.00200	08/28/01 20:35	HEB	7439-97-6		
GC/MS Semivolatiles								
Semivolatile Organics	Prep/Method: EPA 3510 / EPA 8270							
Phenol	ND	ug/l	20.	08/29/01 17:58	SRS	108-95-2		
bis(2-Chloroethyl) ether	ND	ug/l	20.	08/29/01 17:58	SRS	111-44-4		
2-Chlorophenol	ND	ug/l	20.	08/29/01 17:58	SRS	95-57-8		
1,3-Dichlorobenzene	ND	ug/l	20.	08/29/01 17:58	SRS	541-73-1		
1,4-Dichlorobenzene	ND	ug/l	20.	08/29/01 17:58	SRS	106-46-7		
Benzyl alcohol	ND	ug/l	40.	08/29/01 17:58	SRS	100-51-6		
1,2-Dichlorobenzene	ND	ug/l	20.	08/29/01 17:58	SRS	95-50-1		
2-Methylphenol (o-Cresol)	ND	ug/l	20.	08/29/01 17:58	SRS	95-48-7		
bis(2-Chloroisopropyl) ether	ND	ug/l	20.	08/29/01 17:58	SRS	39638-32-9		
3&4-Methylphenol	ND	ug/l	40.	08/29/01 17:58	SRS			
N-Nitroso-di-n-propylamine	ND	ug/l	20.	08/29/01 17:58	SRS	621-64-7		
Hexachloroethane	ND	ug/l	20.	08/29/01 17:58	SRS	67-72-1		
Nitrobenzene	ND	ug/l	20.	08/29/01 17:58	SRS	98-95-3		
Isophorone	ND	ug/l	20.	08/29/01 17:58	SRS	78-59-1		
2-Nitrophenol	ND	ug/l	20.	08/29/01 17:58	SRS	88-75-5		
2,4-Dimethylphenol	ND	ug/l	20.	08/29/01 17:58	SRS	105-67-9		
Benzoic acid	ND	ug/l	100	08/29/01 17:58	SRS	65-85-0		
bis(2-Chloroethoxy)methane	ND	ug/l	20.	08/29/01 17:58	SRS	111-91-1		
2,4-Dichlorophenol	ND	ug/l	20.	08/29/01 17:58	SRS	120-83-2		
1,2,4-Trichlorobenzene	ND	ug/l	20.	08/29/01 17:58	SRS	120-82-1		

REPORT OF LABORATORY ANALYSIS

This report shall not be reproduced, except in full,
without the written consent of Pace Analytical Services, Inc.

Pace Analytical
www.pacelabs.com

Pace Analytical Services, Inc.
7726 Moller Road
Indianapolis, IN 46268
Phone: 317.875.5894
Fax: 317.872.6189

Lab Project Number: 5016256
Client Project ID: Stanley Tools/C744

Lab Sample No: 501212666 | Project Sample Number: 5016256-003 | Date Collected: 08/23/01 10:15
Client Sample ID: WCW-001 | Matrix: Water | Date Received: 08/24/01 09:40

Parameters	Results	Units	Report Limit	Analyzed		CAS No.	Ftnote	Reg Limit
Naphthalene	ND	ug/l	20.	08/29/01 17:58	SRS	91-20-3		
4-Chloroaniline	ND	ug/l	40.	08/29/01 17:58	SRS	106-47-8		
Hexachloro-1,3-butadiene	ND	ug/l	20.	08/29/01 17:58	SRS	87-68-3		
4-Chloro-3-methylphenol	ND	ug/l	40.	08/29/01 17:58	SRS	59-50-7		
2-Methylnaphthalene	ND	ug/l	20.	08/29/01 17:58	SRS	91-57-6		
Hexachlorocyclopentadiene	ND	ug/l	20.	08/29/01 17:58	SRS	77-47-4		
2,4,6-Trichlorophenol	ND	ug/l	20.	08/29/01 17:58	SRS	88-06-2		
2,4,5-Trichlorophenol	ND	ug/l	20.	08/29/01 17:58	SRS	95-95-4		
2-Chloronaphthalene	ND	ug/l	20.	08/29/01 17:58	SRS	91-58-7		
2-Nitroaniline	ND	ug/l	100	08/29/01 17:58	SRS	88-74-4		
Dimethylphthalate	ND	ug/l	20.	08/29/01 17:58	SRS	131-11-3		
Acenaphthylene	ND	ug/l	20.	08/29/01 17:58	SRS	208-96-8		
2,6-Dinitrotoluene	ND	ug/l	20.	08/29/01 17:58	SRS	606-20-2		
3-Nitroaniline	ND	ug/l	100	08/29/01 17:58	SRS	99-09-2		
Acenaphthene	ND	ug/l	20.	08/29/01 17:58	SRS	83-32-9		
2,4-Dinitrophenol	ND	ug/l	100	08/29/01 17:58	SRS	51-28-5		
4-Nitrophenol	ND	ug/l	100	08/29/01 17:58	SRS	100-02-7		
Dibenzofuran	ND	ug/l	20.	08/29/01 17:58	SRS	132-64-9		
2,4-Dinitrotoluene	ND	ug/l	20.	08/29/01 17:58	SRS	121-14-2		
Diethylphthalate	ND	ug/l	20.	08/29/01 17:58	SRS	84-66-2		
4-Chlorophenylphenyl ether	ND	ug/l	20.	08/29/01 17:58	SRS	7005-72-3		
Fluorene	ND	ug/l	20.	08/29/01 17:58	SRS	86-73-7		
4-Nitroaniline	ND	ug/l	100	08/29/01 17:58	SRS	100-01-6		
4,6-Dinitro-2-methylphenol	ND	ug/l	100	08/29/01 17:58	SRS	534-52-1		
N-Nitrosodiphenylamine	ND	ug/l	20.	08/29/01 17:58	SRS	86-30-6		
4-Bromophenylphenyl ether	ND	ug/l	20.	08/29/01 17:58	SRS	101-55-3		
Hexachlorobenzene	ND	ug/l	20.	08/29/01 17:58	SRS	118-74-1		
Pentachlorophenol	ND	ug/l	100	08/29/01 17:58	SRS	87-86-5		
Phenanthrene	ND	ug/l	20.	08/29/01 17:58	SRS	85-01-8		
Anthracene	ND	ug/l	20.	08/29/01 17:58	SRS	120-12-7		
Di-n-butylphthalate	ND	ug/l	20.	08/29/01 17:58	SRS	84-74-2		
Fluoranthene	ND	ug/l	20.	08/29/01 17:58	SRS	206-44-0		
Pyrene	ND	ug/l	20.	08/29/01 17:58	SRS	129-00-0		
Butylbenzylphthalate	ND	ug/l	20.	08/29/01 17:58	SRS	85-68-7		
3,3'-Dichlorobenzidine	ND	ug/l	40.	08/29/01 17:58	SRS	91-94-1		
Benzo(a)anthracene	ND	ug/l	20.	08/29/01 17:58	SRS	56-55-3		
Chrysene	ND	ug/l	20.	08/29/01 17:58	SRS	218-01-9		

REPORT OF LABORATORY ANALYSIS

This report shall not be reproduced, except in full,
without the written consent of Pace Analytical Services, Inc.

Pace Analytical
www.pacelabs.com

Pace Analytical Services, Inc.
7726 Moller Road
Indianapolis, IN 46268
Phone: 317.875.5894
Fax: 317.872.6189

Lab Project Number: 5016256
Client Project ID: Stanley Tools/C744

Lab Sample No: 501212666 | Project Sample Number: 5016256-003 | Date Collected: 08/23/01 10:15
Client Sample ID: WCW-001 | Matrix: Water | Date Received: 08/24/01 09:40

Parameters	Results	Units	Report Limit	Analyzed		CAS No.	Ftnote	Reg Limit
bis(2-Ethylhexyl)phthalate	240	ug/l	20.	08/29/01 17:58	SRS	117-81-7		
Di-n-octylphthalate	ND	ug/l	20.	08/29/01 17:58	SRS	117-84-0		
Benzo(b)fluoranthene	ND	ug/l	20.	08/29/01 17:58	SRS	205-99-2		
Benzo(k)fluoranthene	ND	ug/l	20.	08/29/01 17:58	SRS	207-08-9		
Benzo(a)pyrene	ND	ug/l	20.	08/29/01 17:58	SRS	50-32-8		
Indeno(1,2,3-cd)pyrene	ND	ug/l	20.	08/29/01 17:58	SRS	193-39-5		
Dibenz(a,h)anthracene	ND	ug/l	20.	08/29/01 17:58	SRS	53-70-3		
Benzo(g,h,i)perylene	ND	ug/l	20.	08/29/01 17:58	SRS	191-24-2		
Nitrobenzene-d5 (S)	94	%		08/29/01 17:58	SRS	4165-60-0		
2-Fluorobiphenyl (S)	90	%		08/29/01 17:58	SRS	321-60-8		
Terphenyl-d14 (S)	45	%		08/29/01 17:58	SRS	1718-51-0		
Phenol-d6 (S)	62	%		08/29/01 17:58	SRS	13127-88-3		
2-Fluorophenol (S)	70	%		08/29/01 17:58	SRS	367-12-4		
2,4,6-Tribromophenol (S)	86	%		08/29/01 17:58	SRS			
Date Extracted				08/28/01				
GC Semivolatiles								
PCBs in Water by 8082	Prep/Method: EPA 3510 / EPA 8082							
PCB-1016 (Aroclor 1016)	ND	ug/l	9.8	08/30/01 11:03	MED	12674-11-2		
PCB-1221 (Aroclor 1221)	ND	ug/l	9.8	08/30/01 11:03	MED	11104-28-2		
PCB-1232 (Aroclor 1232)	ND	ug/l	9.8	08/30/01 11:03	MED	11141-16-5		
PCB-1242 (Aroclor 1242)	ND	ug/l	9.8	08/30/01 11:03	MED	53469-21-9		
PCB-1248 (Aroclor 1248)	20.	ug/l	9.8	08/30/01 11:03	MED	12672-29-6		
PCB-1254 (Aroclor 1254)	ND	ug/l	9.8	08/30/01 11:03	MED	11097-69-1		
PCB-1260 (Aroclor 1260)	ND	ug/l	9.8	08/30/01 11:03	MED	11096-82-5		
Decachlorobiphenyl (S)	0	%		08/30/01 11:03	MED	2051-24-3		
Tetrachloro-m-xylene (S)	0	%		08/30/01 11:03	MED	877-09-8	1	
Date Extracted				08/29/01				
GC/MS Volatiles								
GC/MS VOCs by 8260	Prep/Method: EPA 8260 / EPA 8260							
Dichlorodifluoromethane	ND	ug/l	5.0	08/30/01 21:14	CAC	75-71-8		
Chloromethane	ND	ug/l	5.0	08/30/01 21:14	CAC	74-87-3		
Vinyl chloride	45.	ug/l	2.0	08/30/01 21:14	CAC	75-01-4		

REPORT OF LABORATORY ANALYSIS

This report shall not be reproduced, except in full,
without the written consent of Pace Analytical Services, Inc.

Pace Analytical
www.pacelabs.com

Pace Analytical Services, Inc.
7726 Moller Road
Indianapolis, IN 46268
Phone: 317.875.5894
Fax: 317.872.6189

Lab Project Number: 5016256
Client Project ID: Stanley Tools/C744

Lab Sample No: 501212666 | Project Sample Number: 5016256-003 | Date Collected: 08/23/01 10:15
Client Sample ID: WCW-001 | Matrix: Water | Date Received: 08/24/01 09:40

Parameters	Results	Units	Report Limit	Analyzed		CAS No.	Ftnote	Reg Limit
Chloroethane	ND	ug/l	5.0	08/30/01 21:14	CAC	75-00-3		
Trichlorofluoromethane	ND	ug/l	5.0	08/30/01 21:14	CAC	75-69-4		
Methylene chloride	ND	ug/l	5.0	08/30/01 21:14	CAC	75-09-2		
1,1-Dichloroethene	ND	ug/l	5.0	08/30/01 21:14	CAC	75-35-4		
trans-1,2-Dichloroethene	20.	ug/l	5.0	08/30/01 21:14	CAC	156-60-5		
1,1-Dichloroethane	6.0	ug/l	5.0	08/30/01 21:14	CAC	75-34-3		
2,2-Dichloropropane	ND	ug/l	5.0	08/30/01 21:14	CAC	594-20-7		
cis-1,2-Dichloroethene	150	ug/l	5.0	08/30/01 21:14	CAC	156-59-2		
Chloroform	ND	ug/l	5.0	08/30/01 21:14	CAC	67-66-3		
Bromochloromethane	ND	ug/l	5.0	08/30/01 21:14	CAC	74-97-5		
1,1,1-Trichloroethane	ND	ug/l	5.0	08/30/01 21:14	CAC	71-55-6		
Carbon tetrachloride	ND	ug/l	5.0	08/30/01 21:14	CAC	56-23-5		
1,1-Dichloropropene	ND	ug/l	5.0	08/30/01 21:14	CAC	563-58-6		
Benzene	ND	ug/l	5.0	08/30/01 21:14	CAC	71-43-2		
1,2-Dichloroethane	ND	ug/l	5.0	08/30/01 21:14	CAC	107-06-2		
Trichloroethene	61.	ug/l	5.0	08/30/01 21:14	CAC	79-01-6		
1,2-Dichloropropane	ND	ug/l	5.0	08/30/01 21:14	CAC	78-87-5		
Bromodichloromethane	ND	ug/l	5.0	08/30/01 21:14	CAC	75-27-4		
Dibromomethane	ND	ug/l	5.0	08/30/01 21:14	CAC	74-95-3		
Toluene	ND	ug/l	5.0	08/30/01 21:14	CAC	108-88-3		
1,1,2-Trichloroethane	ND	ug/l	5.0	08/30/01 21:14	CAC	79-00-5		
Tetrachloroethene	ND	ug/l	5.0	08/30/01 21:14	CAC	127-18-4		
1,3-Dichloropropane	ND	ug/l	5.0	08/30/01 21:14	CAC	142-28-9		
Dibromochloromethane	ND	ug/l	5.0	08/30/01 21:14	CAC	124-48-1		
1,2-Dibromoethane (EDB)	ND	ug/l	5.0	08/30/01 21:14	CAC	106-93-4		
Chlorobenzene	ND	ug/l	5.0	08/30/01 21:14	CAC	108-90-7		
1,1,1,2-Tetrachloroethane	ND	ug/l	5.0	08/30/01 21:14	CAC	630-20-6		
Ethylbenzene	ND	ug/l	5.0	08/30/01 21:14	CAC	100-41-4		
m&p-Xylene	ND	ug/l	5.0	08/30/01 21:14	CAC			
o-Xylene	ND	ug/l	5.0	08/30/01 21:14	CAC	95-47-6		
Styrene	ND	ug/l	5.0	08/30/01 21:14	CAC	100-42-5		
Bromoform	ND	ug/l	5.0	08/30/01 21:14	CAC	75-25-2		
Isopropylbenzene (Cumene)	ND	ug/l	5.0	08/30/01 21:14	CAC	98-82-8		
1,1,2,2-Tetrachloroethane	ND	ug/l	5.0	08/30/01 21:14	CAC	79-34-5		
Bromobenzene	ND	ug/l	5.0	08/30/01 21:14	CAC	108-86-1		
1,2,3-Trichloropropane	ND	ug/l	5.0	08/30/01 21:14	CAC	96-18-4		
n-Propylbenzene	ND	ug/l	5.0	08/30/01 21:14	CAC	103-65-1		

REPORT OF LABORATORY ANALYSIS

This report shall not be reproduced, except in full,
without the written consent of Pace Analytical Services, Inc.

Pace Analytical
www.pacelabs.com

Pace Analytical Services, Inc.
7726 Moller Road
Indianapolis, IN 46268
Phone: 317.875.5894
Fax: 317.872.6189

Lab Project Number: 5016256
Client Project ID: Stanley Tools/C744

Lab Sample No: 501212666 | Project Sample Number: 5016256-003 | Date Collected: 08/23/01 10:15
Client Sample ID: WCW-001 | Matrix: Water | Date Received: 08/24/01 09:40

Parameters	Results	Units	Report Limit	Analyzed		CAS No.	Ftnote	Reg Limit
2-Chlorotoluene	ND	ug/l	5.0	08/30/01 21:14	CAC	95-49-8		
1,3,5-Trimethylbenzene	ND	ug/l	5.0	08/30/01 21:14	CAC	108-67-8		
4-Chlorotoluene	ND	ug/l	5.0	08/30/01 21:14	CAC	106-43-4		
1,2,4-Trimethylbenzene	ND	ug/l	5.0	08/30/01 21:14	CAC	95-63-6		
sec-Butylbenzene	ND	ug/l	5.0	08/30/01 21:14	CAC	135-98-8		
tert-Butylbenzene	ND	ug/l	5.0	08/30/01 21:14	CAC	98-06-6		
p-Isopropyltoluene	ND	ug/l	5.0	08/30/01 21:14	CAC	99-87-6		
1,3-Dichlorobenzene	ND	ug/l	5.0	08/30/01 21:14	CAC	541-73-1		
1,4-Dichlorobenzene	ND	ug/l	5.0	08/30/01 21:14	CAC	106-46-7		
n-Butylbenzene	ND	ug/l	5.0	08/30/01 21:14	CAC	104-51-8		
1,2-Dichlorobenzene	ND	ug/l	5.0	08/30/01 21:14	CAC	95-50-1		
1,2-Dibromo-3-chloropropane	ND	ug/l	5.0	08/30/01 21:14	CAC	96-12-8		
1,2,4-Trichlorobenzene	ND	ug/l	5.0	08/30/01 21:14	CAC	120-82-1		
Hexachloro-1,3-butadiene	ND	ug/l	5.0	08/30/01 21:14	CAC	87-68-3		
Naphthalene	ND	ug/l	5.0	08/30/01 21:14	CAC	91-20-3		
1,2,3-Trichlorobenzene	ND	ug/l	5.0	08/30/01 21:14	CAC	87-61-6		
trans-1,3-Dichloropropene	ND	ug/l	5.0	08/30/01 21:14	CAC	10061-02-6		
cis-1,3-Dichloropropene	ND	ug/l	5.0	08/30/01 21:14	CAC	10061-01-5		
2-Chloroethylvinyl ether	ND	ug/l	50.	08/30/01 21:14	CAC	110-75-8		
Acetone	ND	ug/l	50.	08/30/01 21:14	CAC	67-64-1		
2-Butanone (MEK)	ND	ug/l	10.	08/30/01 21:14	CAC	78-93-3		
4-Methyl-2-pentanone (MIBK)	ND	ug/l	10.	08/30/01 21:14	CAC	108-10-1		
Acrolein	ND	ug/l	100	08/30/01 21:14	CAC	107-02-8		
Acrylonitrile	ND	ug/l	100	08/30/01 21:14	CAC	107-13-1		
2-Hexanone	ND	ug/l	10.	08/30/01 21:14	CAC	591-78-6		
Vinyl acetate	ND	ug/l	10.	08/30/01 21:14	CAC	108-05-4		
Iodomethane	ND	ug/l	10.	08/30/01 21:14	CAC	74-88-4		
Methyl-tert-butyl ether	ND	ug/l	5.0	08/30/01 21:14	CAC	1634-04-4		
Carbon disulfide	ND	ug/l	5.0	08/30/01 21:14	CAC	75-15-0		
trans-1,4-Dichloro-2-butene	ND	ug/l	100	08/30/01 21:14	CAC	110-57-6		
Ethyl methacrylate	ND	ug/l	100	08/30/01 21:14	CAC	97-63-2		
Xylene (Total)	ND	ug/l	10.	08/30/01 21:14	CAC	1330-20-7		
Dibromofluoromethane (S)	119	%		08/30/01 21:14	CAC			
Toluene-d8 (S)	90	%		08/30/01 21:14	CAC	2037-26-5		
4-Bromofluorobenzene (S)	74	%		08/30/01 21:14	CAC	460-00-4		

REPORT OF LABORATORY ANALYSIS

This report shall not be reproduced, except in full,
without the written consent of Pace Analytical Services, Inc.

Pace Analytical
www.pacelabs.com

Pace Analytical Services, Inc.
7726 Moller Road
Indianapolis, IN 46268
Phone: 317.875.5894
Fax: 317.872.6189

QUALITY CONTROL DATA

Lab Project Number: 5016256
Client Project ID: Stanley Tools/C744

QC Batch: 27836 Analysis Method: EPA 8270
QC Batch Method: EPA 3550 Sonication Analysis Description: Semivolatile Organics
Associated Lab Samples: 501212641 501212658

METHOD BLANK: 501213920
Associated Lab Samples: 501212641 501212658

Parameter	Units	Blank Result	Reporting Limit	Footnotes
Naphthalene	ug/kg	ND	330	
2-Methylnaphthalene	ug/kg	ND	330	
Acenaphthylene	ug/kg	ND	330	
Acenaphthene	ug/kg	ND	330	
Fluorene	ug/kg	ND	330	
Phenanthrene	ug/kg	ND	330	
Anthracene	ug/kg	ND	330	
Fluoranthene	ug/kg	ND	330	
Pyrene	ug/kg	ND	330	
Benzo(a)anthracene	ug/kg	ND	330	
Chrysene	ug/kg	ND	330	
Benzo(b)fluoranthene	ug/kg	ND	330	
Benzo(k)fluoranthene	ug/kg	ND	330	
Benzo(a)pyrene	ug/kg	ND	330	
Indeno(1,2,3-cd)pyrene	ug/kg	ND	330	
Dibenz(a,h)anthracene	ug/kg	ND	330	
Benzo(g,h,i)perylene	ug/kg	ND	330	
Nitrobenzene-d5 (S)	%	76		
2-Fluorobiphenyl (S)	%	76		
Terphenyl-d14 (S)	%	87		

LABORATORY CONTROL SAMPLE: 501213938

Parameter	Units	Spike Conc.	LCS Result	LCS % Rec	Footnotes
Acenaphthene	ug/kg	3333	2110	63	
Pyrene	ug/kg	3333	2584	78	
Nitrobenzene-d5 (S)				64	
2-Fluorobiphenyl (S)				63	

REPORT OF LABORATORY ANALYSIS
This report shall not be reproduced, except in full,
without the written consent of Pace Analytical Services, Inc.

Pace Analytical
www.pacelabs.com

Pace Analytical Services, Inc.
7726 Moller Road
Indianapolis, IN 46268
Phone: 317.875.5894
Fax: 317.872.6189

QUALITY CONTROL DATA

Lab Project Number: 5016256
Client Project ID: Stanley Tools/C744

LABORATORY CONTROL SAMPLE: 501213938

Parameter	Units	Spike Conc.	LCS Result	LCS % Rec	Footnotes
Terphenyl-d14 (S)				79	

MATRIX SPIKE & MATRIX SPIKE DUPLICATE: 501213946 501213953

Parameter	Units	501213144 Result	Spike Conc.	MS Result	MSD Result	MS % Rec	MSD % Rec	RPD	Footnotes
Acenaphthene	ug/kg	0	3333.00	2181	2472	65	74	13	
Pyrene	ug/kg	149.9	3333.00	2486	2733	70	78	9	
Nitrobenzene-d5 (S)						66	72		
2-Fluorobiphenyl (S)						67	73		
Terphenyl-d14 (S)						74	85		

REPORT OF LABORATORY ANALYSIS

This report shall not be reproduced, except in full,
without the written consent of Pace Analytical Services, Inc.

Pace Analytical
www.pacelabs.com

Pace Analytical Services, Inc.
7726 Moller Road
Indianapolis, IN 46268
Phone: 317.875.5894
Fax: 317.872.6189

QUALITY CONTROL DATA

Lab Project Number: 5016256
Client Project ID: Stanley Tools/C744

QC Batch: 27875 Analysis Method: EPA 8270
QC Batch Method: EPA 3510 Analysis Description: Semivolatile Organics
Associated Lab Samples: 501212666

METHOD BLANK: 501215354
Associated Lab Samples: 501212666

Parameter	Units	Blank Result	Reporting Limit	Footnotes
1,3-Dichlorobenzene	ug/l	ND	10.	
1,4-Dichlorobenzene	ug/l	ND	10.	
1,2-Dichlorobenzene	ug/l	ND	10.	
Benzoic acid	ug/l	ND	50.	
Phenol	ug/l	ND	10.	
bis(2-Chloroethyl) ether	ug/l	ND	10.	
2-Chlorophenol	ug/l	ND	10.	
Benzyl alcohol	ug/l	ND	20.	
2-Methylphenol (o-Cresol)	ug/l	ND	10.	
bis(2-Chloroisopropyl) ether	ug/l	ND	10.	
3&4-Methylphenol	ug/l	ND	20.	
N-Nitroso-di-n-propylamine	ug/l	ND	10.	
Hexachloroethane	ug/l	ND	10.	
Nitrobenzene	ug/l	ND	10.	
Isophorone	ug/l	ND	10.	
2-Nitrophenol	ug/l	ND	10.	
2,4-Dimethylphenol	ug/l	ND	10.	
bis(2-Chloroethoxy)methane	ug/l	ND	10.	
2,4-Dichlorophenol	ug/l	ND	10.	
1,2,4-Trichlorobenzene	ug/l	ND	10.	
Naphthalene	ug/l	ND	10.	
4-Chloroaniline	ug/l	ND	20.	
Hexachloro-1,3-butadiene	ug/l	ND	10.	
4-Chloro-3-methylphenol	ug/l	ND	20.	
2-Methylnaphthalene	ug/l	ND	10.	
Hexachlorocyclopentadiene	ug/l	ND	10.	
2,4,6-Trichlorophenol	ug/l	ND	10.	
2,4,5-Trichlorophenol	ug/l	ND	10.	
2-Chloronaphthalene	ug/l	ND	10.	
2-Nitroaniline	ug/l	ND	50.	

REPORT OF LABORATORY ANALYSIS
This report shall not be reproduced, except in full,
without the written consent of Pace Analytical Services, Inc.

Pace Analytical
www.pacelabs.com

Pace Analytical Services, Inc.
7726 Moller Road
Indianapolis, IN 46268
Phone: 317.875.5894
Fax: 317.872.6189

QUALITY CONTROL DATA

Lab Project Number: 5016256
Client Project ID: Stanley Tools/C744

METHOD BLANK: 501215354
Associated Lab Samples: 501212666

Parameter	Units	Blank Result	Reporting Limit	Footnotes
Dimethylphthalate	ug/l	ND	10.	
Acenaphthylene	ug/l	ND	10.	
2,6-Dinitrotoluene	ug/l	ND	10.	
3-Nitroaniline	ug/l	ND	50.	
Acenaphthene	ug/l	ND	10.	
2,4-Dinitrophenol	ug/l	ND	50.	
4-Nitrophenol	ug/l	ND	50.	
Dibenzofuran	ug/l	ND	10.	
2,4-Dinitrotoluene	ug/l	ND	10.	
Diethylphthalate	ug/l	ND	10.	
4-Chlorophenylphenyl ether	ug/l	ND	10.	
Fluorene	ug/l	ND	10.	
4-Nitroaniline	ug/l	ND	50.	
4,6-Dinitro-2-methylphenol	ug/l	ND	50.	
N-Nitrosodiphenylamine	ug/l	ND	10.	
4-Bromophenylphenyl ether	ug/l	ND	10.	
Hexachlorobenzene	ug/l	ND	10.	
Pentachlorophenol	ug/l	ND	50.	
Phenanthrene	ug/l	ND	10.	
Anthracene	ug/l	ND	10.	
Di-n-butylphthalate	ug/l	ND	10.	
Fluoranthene	ug/l	ND	10.	
Pyrene	ug/l	ND	10.	
Benzo(a)anthracene	ug/l	ND	10.	
Chrysene	ug/l	ND	10.	
3,3'-Dichlorobenzidine	ug/l	ND	20.	
Di-n-octylphthalate	ug/l	ND	10.	
Benzo(b)fluoranthene	ug/l	ND	10.	
Benzo(k)fluoranthene	ug/l	ND	10.	
Benzo(a)pyrene	ug/l	ND	10.	
Indeno(1,2,3-cd)pyrene	ug/l	ND	10.	
Dibenz(a,h)anthracene	ug/l	ND	10.	
Benzo(g,h,i)perylene	ug/l	ND	10.	
Phenol-d6 (S)	%	31		
Nitrobenzene-d5 (S)	%	72		

REPORT OF LABORATORY ANALYSIS

This report shall not be reproduced, except in full,
without the written consent of Pace Analytical Services, Inc.

Pace Analytical
www.pacelabs.com

Pace Analytical Services, Inc.
7726 Moller Road
Indianapolis, IN 46268
Phone: 317.875.5894
Fax: 317.872.6189

QUALITY CONTROL DATA

Lab Project Number: 5016256
Client Project ID: Stanley Tools/C744

METHOD BLANK: 501215354
Associated Lab Samples: 501212666

Parameter	Units	Blank Result	Reporting Limit	Footnotes
2-Fluorobiphenyl (S)	%	67		
2,4,6-Tribromophenol (S)	%	63		
2-Fluorophenol (S)	%	33		
Terphenyl-d14 (S)	%	82		
Butylbenzylphthalate	ug/l	ND	10.	
bis(2-Ethylhexyl)phthalate	ug/l	ND	10.	

LABORATORY CONTROL SAMPLE: 501215362

Parameter	Units	Spike Conc.	LCS Result	LCS % Rec	Footnotes
1,4-Dichlorobenzene	ug/l	100	66.67	67	
Phenol	ug/l	100	38.55	38	
2-Chlorophenol	ug/l	100	75.52	76	
N-Nitroso-di-n-propylamine	ug/l	100	82.28	82	
1,2,4-Trichlorobenzene	ug/l	100	67.47	68	
4-Chloro-3-methylphenol	ug/l	100	81.27	81	
Acenaphthene	ug/l	100	80.49	80	
4-Nitrophenol	ug/l	100	44.35	44	
2,4-Dinitrotoluene	ug/l	100	94.75	95	
Pentachlorophenol	ug/l	100	83.48	84	
Pyrene	ug/l	100	85.52	86	
Phenol-d6 (S)				40	
Nitrobenzene-d5 (S)				82	
2-Fluorobiphenyl (S)				78	
2,4,6-Tribromophenol (S)				83	
2-Fluorophenol (S)				50	
Terphenyl-d14 (S)				90	

MATRIX SPIKE & MATRIX SPIKE DUPLICATE: 501215370 501215388

Parameter	Units	501212187 Result	Spike Conc.	MS Result	MSD Result	MS % Rec	MSD % Rec	RPD	Footnotes

REPORT OF LABORATORY ANALYSIS

This report shall not be reproduced, except in full,
without the written consent of Pace Analytical Services, Inc.

Pace Analytical Services, Inc.
7726 Moller Road
Indianapolis, IN 46268
Phone: 317.875.5894
Fax: 317.872.6189

QUALITY CONTROL DATA

Lab Project Number: 5016256
Client Project ID: Stanley Tools/C744

MATRIX SPIKE & MATRIX SPIKE DUPLICATE: 501215370 501215388

Parameter	Units	501212187 Result	Spike Conc.	MS Result	MSD Result	MS % Rec	MSD % Rec	RPD	Footnotes
1,4-Dichlorobenzene	ug/l	0	100.00	46.27	54.72	46	55	17	
Phenol	ug/l	0	100.00	1.466	0	2	0	200	
2-Chlorophenol	ug/l	0	100.00	2.672	0	3	0	200	
N-Nitroso-di-n-propylamine	ug/l	0	100.00	71.16	76.39	71	76	7	
1,2,4-Trichlorobenzene	ug/l	0	100.00	47.91	56.74	48	57	17	
4-Chloro-3-methylphenol	ug/l	0	100.00	3.324	2.742	3	3	19	
Acenaphthene	ug/l	0	100.00	48.49	57.20	48	57	16	
4-Nitrophenol	ug/l	0	100.00	12.72	0	13	0	200	
2,4-Dinitrotoluene	ug/l	0	100.00	74.17	0	74	0	200	
Pentachlorophenol	ug/l	0	100.00	23.47	12.82	24	13	59	
Pyrene	ug/l	0	100.00	43.81	44.31	44	44	1	
Phenol-d6 (S)						1	0		
Nitrobenzene-d5 (S)						70	74		
2-Fluorobiphenyl (S)						63	66		
2,4,6-Tribromophenol (S)						5	0		1,1
2-Fluorophenol (S)						1	0		
Terphenyl-d14 (S)						57	51		

REPORT OF LABORATORY ANALYSIS

This report shall not be reproduced, except in full,
without the written consent of Pace Analytical Services, Inc.

Pace Analytical
www.pacelabs.com

Pace Analytical Services, Inc.
7726 Moller Road
Indianapolis, IN 46268
Phone: 317.875.5894
Fax: 317.872.6189

QUALITY CONTROL DATA

Lab Project Number: 5016256
Client Project ID: Stanley Tools/C744

QC Batch: 27957 — Analysis Method: EPA 8270
QC Batch Method: EPA 3510 — Analysis Description: Semivolatile Organics, TCLP
Associated Lab Samples: 501215248 501215255 501222046 501222053

METHOD BLANK: 501219992
Associated Lab Samples: 501215248

Parameter	Units	Blank Result	Reporting Limit	Footnotes
1,4-Dichlorobenzene	ug/l	ND	100	
2-Methylphenol (o-Cresol)	ug/l	ND	100	
3&4-Methylphenol	ug/l	ND	200	
Nitrobenzene	ug/l	ND	100	
Hexachloro-1,3-butadiene	ug/l	ND	100	
2,4,6-Trichlorophenol	ug/l	ND	100	
2,4,5-Trichlorophenol	ug/l	ND	500	
2,4-Dinitrotoluene	ug/l	ND	100	
Hexachlorobenzene	ug/l	ND	100	
Pentachlorophenol	ug/l	ND	500	
Pyridine	ug/l	ND	100	
Hexachloroethane	ug/l	ND	100	
Nitrobenzene-d5 (S)	%	85		
2-Fluorobiphenyl (S)	%	97		
Terphenyl-d14 (S)	%	129		
Phenol-d6 (S)	%	35		
2-Fluorophenol (S)	%	77		
2,4,6-Tribromophenol (S)	%	118		

METHOD BLANK: 501220032
Associated Lab Samples: 501215255 501222046 501222053

Parameter	Units	Blank Result	Reporting Limit	Footnotes
1,4-Dichlorobenzene	ug/l	ND	100	
2-Methylphenol (o-Cresol)	ug/l	ND	100	
3&4-Methylphenol	ug/l	ND	200	
Nitrobenzene	ug/l	ND	100	
Hexachloro-1,3-butadiene	ug/l	ND	100	

REPORT OF LABORATORY ANALYSIS
This report shall not be reproduced, except in full,
without the written consent of Pace Analytical Services, Inc.

Pace Analytical
www.pacelabs.com

Pace Analytical Services, Inc.
7726 Moller Road
Indianapolis, IN 46268
Phone: 317.875.5894
Fax: 317.872.6189

QUALITY CONTROL DATA

Lab Project Number: 5016256
Client Project ID: Stanley Tools/C744

METHOD BLANK: 501220032
Associated Lab Samples: 501215255 501222046 501222053

Parameter	Units	Blank Result	Reporting Limit	Footnotes
2,4,6-Trichlorophenol	ug/l	ND	100	
2,4,5-Trichlorophenol	ug/l	ND	500	
2,4-Dinitrotoluene	ug/l	ND	100	
Hexachlorobenzene	ug/l	ND	100	
Pentachlorophenol	ug/l	ND	500	
Pyridine	ug/l	ND	100	
Hexachloroethane	ug/l	ND	100	
Nitrobenzene-d5 (S)	%	88		
2-Fluorobiphenyl (S)	%	87		
Terphenyl-d14 (S)	%	124		
Phenol-d6 (S)	%	33		
2-Fluorophenol (S)	%	75		
2,4,6-Tribromophenol (S)	%	119		

LABORATORY CONTROL SAMPLE: 501220008

Parameter	Units	Spike Conc.	LCS Result	LCS % Rec	Footnotes
1,4-Dichlorobenzene	ug/l	1000	729.1	73	
2-Methylphenol (o-Cresol)	ug/l	1000	684.2	68	
3&4-Methylphenol	ug/l	2000	1480	74	
Nitrobenzene	ug/l	1000	844.5	84	
Hexachloro-1,3-butadiene	ug/l	1000	841.3	84	
2,4,6-Trichlorophenol	ug/l	1000	850.3	85	
2,4,5-Trichlorophenol	ug/l	1000	959.1	96	
2,4-Dinitrotoluene	ug/l	1000	879.5	88	
Hexachlorobenzene	ug/l	1000	722.3	72	
Pentachlorophenol	ug/l	1000	1055	105	
Pyridine	ug/l	1000	535.7	54	
Hexachloroethane	ug/l	1000	640.7	64	
Nitrobenzene-d5 (S)				81	
2-Fluorobiphenyl (S)				89	
Terphenyl-d14 (S)				106	
Phenol-d6 (S)				30	

REPORT OF LABORATORY ANALYSIS

This report shall not be reproduced, except in full,
without the written consent of Pace Analytical Services, Inc.

Pace Analytical
www.pacelabs.com

Pace Analytical Services, Inc.
7726 Moller Road
Indianapolis, IN 46268
Phone: 317.875.5894
Fax: 317.872.6189

QUALITY CONTROL DATA

Lab Project Number: 5016256
Client Project ID: Stanley Tools/C744

LABORATORY CONTROL SAMPLE: 501220008

Parameter	Units	Spike Conc.	LCS Result	LCS % Rec	Footnotes
2-Fluorophenol (S)				66	
2,4,6-Tribromophenol (S)				103	

LABORATORY CONTROL SAMPLE: 501220040

Parameter	Units	Spike Conc.	LCS Result	LCS % Rec	Footnotes
1,4-Dichlorobenzene	ug/l	1000	644.3	64	
2-Methylphenol (o-Cresol)	ug/l	1000	693.3	69	
3&4-Methylphenol	ug/l	2000	1513	76	
Nitrobenzene	ug/l	1000	861.5	86	
Hexachloro-1,3-butadiene	ug/l	1000	742.1	74	
2,4,6-Trichlorophenol	ug/l	1000	854.7	86	
2,4,5-Trichlorophenol	ug/l	1000	945.8	95	
2,4-Dinitrotoluene	ug/l	1000	828.7	83	
Hexachlorobenzene	ug/l	1000	690.6	69	
Pentachlorophenol	ug/l	1000	1003	100	
Pyridine	ug/l	1000	561.6	56	
Hexachloroethane	ug/l	1000	577.4	58	
Nitrobenzene-d5 (S)				81	
2-Fluorobiphenyl (S)				82	
Terphenyl-d14 (S)				108	
Phenol-d6 (S)				31	
2-Fluorophenol (S)				66	
2,4,6-Tribromophenol (S)				101	

MATRIX SPIKE: 501220016

Parameter	Units	501215248 Result	Spike Conc.	MS Result	MS % Rec	Footnotes
1,4-Dichlorobenzene	ug/l	0	1000.00	759.4	76	
2-Methylphenol (o-Cresol)	ug/l	0	1000.00	587.4	59	
3&4-Methylphenol	ug/l	0	2000.00	1197	60	
Nitrobenzene	ug/l	0	1000.00	893.2	89	

REPORT OF LABORATORY ANALYSIS

This report shall not be reproduced, except in full,
without the written consent of Pace Analytical Services, Inc.

Pace Analytical
www.pacelabs.com

Pace Analytical Services, Inc.
7726 Moller Road
Indianapolis, IN 46268
Phone: 317.875.5894
Fax: 317.872.6189

QUALITY CONTROL DATA

Lab Project Number: 5016256
Client Project ID: Stanley Tools/C744

MATRIX SPIKE: 501220016

Parameter	Units	501215248 Result	Spike Conc.	MS Result	MS % Rec	Footnotes
Hexachloro-1,3-butadiene	ug/l	0	1000.00	852.2	85	
2,4,6-Trichlorophenol	ug/l	0	1000.00	731.5	73	
2,4,5-Trichlorophenol	ug/l	0	1000.00	801.7	80	
2,4-Dinitrotoluene	ug/l	0	1000.00	924.5	92	
Hexachlorobenzene	ug/l	0	1000.00	740.5	74	
Pentachlorophenol	ug/l	0	1000.00	800.5	80	
Pyridine	ug/l	0	1000.00	520.0	52	
Hexachloroethane	ug/l	0	1000.00	685.7	69	
Nitrobenzene-d5 (S)					84	
2-Fluorobiphenyl (S)					90	
Terphenyl-d14 (S)					100	
Phenol-d6 (S)					27	
2-Fluorophenol (S)					56	
2,4,6-Tribromophenol (S)					84	

MATRIX SPIKE: 501220057

Parameter	Units	501215255 Result	Spike Conc.	MS Result	MS % Rec	Footnotes
1,4-Dichlorobenzene	ug/l	0	1000.00	540.2	54	
2-Methylphenol (o-Cresol)	ug/l	0	1000.00	144.6	14	
3&4-Methylphenol	ug/l	0	2000.00	269.4	14	
Nitrobenzene	ug/l	0	1000.00	904.8	90	
Hexachloro-1,3-butadiene	ug/l	0	1000.00	503.0	50	
2,4,6-Trichlorophenol	ug/l	0	1000.00	434.0	43	
2,4,5-Trichlorophenol	ug/l	0	1000.00	439.2	44	
2,4-Dinitrotoluene	ug/l	0	1000.00	926.2	93	
Hexachlorobenzene	ug/l	0	1000.00	755.2	76	
Pentachlorophenol	ug/l	0	1000.00	729.9	73	
Pyridine	ug/l	0	1000.00	537.0	54	
Hexachloroethane	ug/l	0	1000.00	457.8	46	
Nitrobenzene-d5 (S)					86	1
2-Fluorobiphenyl (S)					85	
Terphenyl-d14 (S)					108	
Phenol-d6 (S)					8	

REPORT OF LABORATORY ANALYSIS

This report shall not be reproduced, except in full,
without the written consent of Pace Analytical Services, Inc.

Pace Analytical Services, Inc.
7726 Moller Road
Indianapolis, IN 46268
Phone: 317.875.5894
Fax: 317.872.6189

QUALITY CONTROL DATA

Lab Project Number: 5016256
Client Project ID: Stanley Tools/C744

MATRIX SPIKE: 501220057

Parameter	Units	501215255 Result	Spike Conc.	MS Result	MS % Rec	Footnotes
2-Fluorophenol (S)					16	
2,4,6-Tribromophenol (S)					53	

REPORT OF LABORATORY ANALYSIS

This report shall not be reproduced, except in full,
without the written consent of Pace Analytical Services, Inc.

Pace Analytical
www.pacelabs.com

Pace Analytical Services, Inc.
7726 Moller Road
Indianapolis, IN 46268
Phone: 317.875.5894
Fax: 317.872.6189

QUALITY CONTROL DATA

Lab Project Number: 5016256
Client Project ID: Stanley Tools/C744

QC Batch: 28019 Analysis Method: EPA 8260
QC Batch Method: EPA 8260 Analysis Description: GC/MS VOCs by 8260
Associated Lab Samples: 501212666

METHOD BLANK: 501223010
Associated Lab Samples: 501212666

Parameter	Units	Blank Result	Reporting Limit	Footnotes
Dichlorodifluoromethane	ug/l	ND	5.0	
Chloromethane	ug/l	ND	5.0	
Vinyl chloride	ug/l	ND	2.0	
Chloroethane	ug/l	ND	5.0	
Trichlorofluoromethane	ug/l	ND	5.0	
Methylene chloride	ug/l	ND	5.0	
1,1-Dichloroethene	ug/l	ND	5.0	
trans-1,2-Dichloroethene	ug/l	ND	5.0	
1,1-Dichloroethane	ug/l	ND	5.0	
2,2-Dichloropropane	ug/l	ND	5.0	
cis-1,2-Dichloroethene	ug/l	ND	5.0	
Chloroform	ug/l	ND	5.0	
Bromochloromethane	ug/l	ND	5.0	
1,1,1-Trichloroethane	ug/l	ND	5.0	
Carbon tetrachloride	ug/l	ND	5.0	
1,1-Dichloropropene	ug/l	ND	5.0	
Benzene	ug/l	ND	5.0	
1,2-Dichloroethane	ug/l	ND	5.0	
Trichloroethene	ug/l	ND	5.0	
1,2-Dichloropropane	ug/l	ND	5.0	
Bromodichloromethane	ug/l	ND	5.0	
Dibromomethane	ug/l	ND	5.0	
Toluene	ug/l	ND	5.0	
1,1,2-Trichloroethane	ug/l	ND	5.0	
Tetrachloroethene	ug/l	ND	5.0	
1,3-Dichloropropane	ug/l	ND	5.0	
Dibromochloromethane	ug/l	ND	5.0	
1,2-Dibromoethane (EDB)	ug/l	ND	5.0	
Chlorobenzene	ug/l	ND	5.0	
1,1,1,2-Tetrachloroethane	ug/l	ND	5.0	

REPORT OF LABORATORY ANALYSIS
This report shall not be reproduced, except in full,
without the written consent of Pace Analytical Services, Inc.

Pace Analytical Services, Inc.
7726 Moller Road
Indianapolis, IN 46268
Phone: 317.875.5894
Fax: 317.872.6189

QUALITY CONTROL DATA

Lab Project Number: 5016256
Client Project ID: Stanley Tools/C744

METHOD BLANK: 501223010
Associated Lab Samples: 501212666

Parameter	Units	Blank Result	Reporting Limit	Footnotes
Ethylbenzene	ug/l	ND	5.0	
m&p-Xylene	ug/l	ND	5.0	
o-Xylene	ug/l	ND	5.0	
Styrene	ug/l	ND	5.0	
Bromoform	ug/l	ND	5.0	
Isopropylbenzene (Cumene)	ug/l	ND	5.0	
1,1,2,2-Tetrachloroethane	ug/l	ND	5.0	
Bromobenzene	ug/l	ND	5.0	
1,2,3-Trichloropropane	ug/l	ND	5.0	
n-Propylbenzene	ug/l	ND	5.0	
2-Chlorotoluene	ug/l	ND	5.0	
1,3,5-Trimethylbenzene	ug/l	ND	5.0	
4-Chlorotoluene	ug/l	ND	5.0	
1,2,4-Trimethylbenzene	ug/l	ND	5.0	
sec-Butylbenzene	ug/l	ND	5.0	
tert-Butylbenzene	ug/l	ND	5.0	
p-Isopropyltoluene	ug/l	ND	5.0	
1,3-Dichlorobenzene	ug/l	ND	5.0	
1,4-Dichlorobenzene	ug/l	ND	5.0	
n-Butylbenzene	ug/l	ND	5.0	
1,2-Dichlorobenzene	ug/l	ND	5.0	
1,2-Dibromo-3-chloropropane	ug/l	ND	5.0	
1,2,4-Trichlorobenzene	ug/l	ND	5.0	
Hexachloro-1,3-butadiene	ug/l	ND	5.0	
Naphthalene	ug/l	ND	5.0	
1,2,3-Trichlorobenzene	ug/l	ND	5.0	
trans-1,3-Dichloropropene	ug/l	ND	5.0	
cis-1,3-Dichloropropene	ug/l	ND	5.0	
2-Chloroethylvinyl ether	ug/l	ND	50.	
Acetone	ug/l	ND	50.	
2-Butanone (MEK)	ug/l	ND	10.	
4-Methyl-2-pentanone (MIBK)	ug/l	ND	10.	
Acrolein	ug/l	ND	100	
Acrylonitrile	ug/l	ND	100	
2-Hexanone	ug/l	ND	10.	

REPORT OF LABORATORY ANALYSIS

This report shall not be reproduced, except in full,
without the written consent of Pace Analytical Services, Inc.

Pace Analytical Services, Inc.
7726 Moller Road
Indianapolis, IN 46268
Phone: 317.875.5894
Fax: 317.872.6189

QUALITY CONTROL DATA

Lab Project Number: 5016256
Client Project ID: Stanley Tools/C744

METHOD BLANK: 501223010
Associated Lab Samples: 501212666

Parameter	Units	Blank Result	Reporting Limit	Footnotes
Vinyl acetate	ug/l	ND	10.	
Iodomethane	ug/l	ND	10.	
Methyl-tert-butyl ether	ug/l	ND	5.0	
Carbon disulfide	ug/l	ND	5.0	
trans-1,4-Dichloro-2-butene	ug/l	ND	100	
Ethyl methacrylate	ug/l	ND	100	
Xylene (Total)	ug/l	ND	10.	
Dibromofluoromethane (S)	%	94		
Toluene-d8 (S)	%	99		
4-Bromofluorobenzene (S)	%	92		

LABORATORY CONTROL SAMPLE: 501223028

Parameter	Units	Spike Conc.	LCS Result	LCS % Rec	Footnotes
Dichlorodifluoromethane	ug/l	20	5.279	26	
Chloromethane	ug/l	20	9.791	49	
Vinyl chloride	ug/l	20	11.60	58	
Chloroethane	ug/l	20	8.457	42	
Trichlorofluoromethane	ug/l	20	11.79	59	
Methylene chloride	ug/l	20	11.39	57	
1,1-Dichloroethene	ug/l	20	17.76	89	
trans-1,2-Dichloroethene	ug/l	20	17.95	90	
1,1-Dichloroethane	ug/l	20	18.64	93	
2,2-Dichloropropane	ug/l	20	18.42	92	
cis-1,2-Dichloroethene	ug/l	20	17.81	89	
Chloroform	ug/l	20	16.34	82	
Bromochloromethane	ug/l	20	19.44	97	
1,1,1-Trichloroethane	ug/l	20	16.66	83	
Carbon tetrachloride	ug/l	20	16.83	84	
1,1-Dichloropropene	ug/l	20	18.54	93	
Benzene	ug/l	20	19.68	98	
1,2-Dichloroethane	ug/l	20	19.27	96	
Trichloroethene	ug/l	20	17.18	86	

REPORT OF LABORATORY ANALYSIS

This report shall not be reproduced, except in full,
without the written consent of Pace Analytical Services, Inc.

Pace Analytical
www.pacelabs.com

Pace Analytical Services, Inc.
7726 Moller Road
Indianapolis, IN 46268
Phone: 317.875.5894
Fax: 317.872.6189

QUALITY CONTROL DATA

Lab Project Number: 5016256
Client Project ID: Stanley Tools/C744

LABORATORY CONTROL SAMPLE: 501223028

Parameter	Units	Spike Conc.	LCS Result	LCS % Rec	Footnotes
1,2-Dichloropropane	ug/l	20	18.23	91	
Bromodichloromethane	ug/l	20	17.02	85	
Dibromomethane	ug/l	20	19.53	98	
Toluene	ug/l	20	18.87	94	
1,1,2-Trichloroethane	ug/l	20	17.68	88	
Tetrachloroethene	ug/l	20	10.47	52	
1,3-Dichloropropane	ug/l	20	19.26	96	
Dibromochloromethane	ug/l	20	17.12	86	
1,2-Dibromoethane (EDB)	ug/l	20	22.03	110	
Chlorobenzene	ug/l	20	18.87	94	
1,1,1,2-Tetrachloroethane	ug/l	20	17.17	86	
Ethylbenzene	ug/l	20	19.22	96	
m&p-Xylene	ug/l	40	40.10	100	
o-Xylene	ug/l	20	19.91	100	
Styrene	ug/l	20	20.27	101	
Bromoform	ug/l	20	17.25	86	
Isopropylbenzene (Cumene)	ug/l	20	19.54	98	
1,1,2,2-Tetrachloroethane	ug/l	20	18.17	91	
Bromobenzene	ug/l	20	18.73	94	
1,2,3-Trichloropropane	ug/l	20	19.33	97	
n-Propylbenzene	ug/l	20	19.32	97	
2-Chlorotoluene	ug/l	20	18.68	93	
1,3,5-Trimethylbenzene	ug/l	20	19.03	95	
4-Chlorotoluene	ug/l	20	19.45	97	
1,2,4-Trimethylbenzene	ug/l	20	18.69	93	
sec-Butylbenzene	ug/l	20	19.95	100	
tert-Butylbenzene	ug/l	20	18.05	90	
p-Isopropyltoluene	ug/l	20	20.52	103	
1,3-Dichlorobenzene	ug/l	20	18.66	93	
1,4-Dichlorobenzene	ug/l	20	19.33	97	
n-Butylbenzene	ug/l	20	20.85	104	
1,2-Dichlorobenzene	ug/l	20	18.83	94	
1,2-Dibromo-3-chloropropane	ug/l	20	19.78	99	
1,2,4-Trichlorobenzene	ug/l	20	22.52	113	
Hexachloro-1,3-butadiene	ug/l	20	20.44	102	
Naphthalene	ug/l	20	26.38	132	

REPORT OF LABORATORY ANALYSIS

This report shall not be reproduced, except in full,
without the written consent of Pace Analytical Services, Inc.

Pace Analytical Services, Inc.
7726 Moller Road
Indianapolis, IN 46268
Phone: 317.875.5894
Fax: 317.872.6189

QUALITY CONTROL DATA

Lab Project Number: 5016256
Client Project ID: Stanley Tools/C744

LABORATORY CONTROL SAMPLE: 501223028

Parameter	Units	Spike Conc.	LCS Result	LCS % Rec	Footnotes
1,2,3-Trichlorobenzene	ug/l	20	23.47	117	
trans-1,3-Dichloropropene	ug/l	20	20.79	104	
cis-1,3-Dichloropropene	ug/l	20	19.41	97	
Xylene (Total)	ug/l	60	60.01	100	
Dibromofluoromethane (S)				95	
Toluene-d8 (S)				100	
4-Bromofluorobenzene (S)				101	

MATRIX SPIKE & MATRIX SPIKE DUPLICATE: 501223036 501223044

Parameter	Units	501207567 Result	Spike Conc.	MS Result	MSD Result	MS % Rec	MSD % Rec	RPD	Footnotes
1,1-Dichloroethene	ug/l	0	20.00	17.72	18.47	89	92	4	
Benzene	ug/l	0	20.00	18.80	19.04	94	95	1	
Trichloroethene	ug/l	0	20.00	17.00	17.26	85	86	1	
Toluene	ug/l	0	20.00	18.38	18.94	92	95	3	
Chlorobenzene	ug/l	0	20.00	18.37	19.18	92	96	4	
Dibromofluoromethane (S)						102	99		
Toluene-d8 (S)						98	98		
4-Bromofluorobenzene (S)						96	94		

REPORT OF LABORATORY ANALYSIS

This report shall not be reproduced, except in full,
without the written consent of Pace Analytical Services, Inc.

Pace Analytical
www.pacelabs.com

Pace Analytical Services, Inc.
7726 Moller Road
Indianapolis, IN 46268
Phone: 317.875.5894
Fax: 317.872.6189

QUALITY CONTROL DATA

Lab Project Number: 5016256
Client Project ID: Stanley Tools/C744

QC Batch: 28071 Analysis Method: EPA 8260
QC Batch Method: EPA 8260 Analysis Description: Volatile Organics, TCLP Leach.
Associated Lab Samples: 501212641 501212658

METHOD BLANK: 501226468
Associated Lab Samples: 501212641 501212658

Parameter	Units	Blank Result	Reporting Limit	Footnotes
Vinyl chloride	ug/l	ND	10.	
1,1-Dichloroethene	ug/l	ND	5.0	
Chloroform	ug/l	ND	20.	
1,2-Dichloroethane	ug/l	ND	5.0	
2-Butanone (MEK)	ug/l	ND	100	
Carbon tetrachloride	ug/l	ND	5.0	
Trichloroethene	ug/l	ND	5.0	
Benzene	ug/l	ND	5.0	
Tetrachloroethene	ug/l	ND	5.0	
Chlorobenzene	ug/l	ND	5.0	
Dibromofluoromethane (S)	%	87		
Toluene-d8 (S)	%	101		
4-Bromofluorobenzene (S)	%	104		

LABORATORY CONTROL SAMPLE: 501226476

Parameter	Units	Spike Conc.	LCS Result	LCS % Rec	Footnotes
Vinyl chloride	ug/l	20	13.49	68	
1,1-Dichloroethene	ug/l	20	16.81	84	
Chloroform	ug/l	20	16.48	82	
1,2-Dichloroethane	ug/l	20	18.95	95	
Carbon tetrachloride	ug/l	20	14.61	73	
Trichloroethene	ug/l	20	19.11	96	
Benzene	ug/l	20	21.29	106	
Tetrachloroethene	ug/l	20	10.08	50	
Chlorobenzene	ug/l	20	19.88	99	
Dibromofluoromethane (S)				86	
Toluene-d8 (S)				103	

REPORT OF LABORATORY ANALYSIS
This report shall not be reproduced, except in full,
without the written consent of Pace Analytical Services, Inc.

Pace Analytical Services, Inc.
7726 Moller Road
Indianapolis, IN 46268
Phone: 317.875.5894
Fax: 317.872.6189

QUALITY CONTROL DATA

Lab Project Number: 5016256
Client Project ID: Stanley Tools/C744

MATRIX SPIKE & MATRIX SPIKE DUPLICATE: 501226484 501226492

Parameter	Units	501212641 Result	Spike Conc.	MS Result	MSD Result	MS % Rec	MSD % Rec	RPD	Footnotes
Vinyl chloride	ug/l	0	200.00	126.8	136.6	63	68	7	
1,1-Dichloroethene	ug/l	0	200.00	175.0	172.0	88	86	2	
Chloroform	ug/l	0	200.00	177.5	182.4	89	91	3	
1,2-Dichloroethane	ug/l	0	200.00	199.9	203.4	100	102	2	
Carbon tetrachloride	ug/l	0	200.00	185.8	185.1	93	92	0	
Trichloroethene	ug/l	0	200.00	185.6	173.4	93	87	7	
Benzene	ug/l	0	200.00	200.2	197.5	100	99	1	
Tetrachloroethene	ug/l	0	200.00	114.4	109.8	57	55	4	
Chlorobenzene	ug/l	0	200.00	194.9	190.5	98	95	2	
Dibromofluoromethane (S)						96	96		
Toluene-d8 (S)						99	100		

REPORT OF LABORATORY ANALYSIS

This report shall not be reproduced, except in full,
without the written consent of Pace Analytical Services, Inc.

Pace Analytical
www.pacelabs.com

Pace Analytical Services, Inc.
7726 Moller Road
Indianapolis, IN 46268
Phone: 317.875.5894
Fax: 317.872.6189

QUALITY CONTROL DATA

Lab Project Number: 5016256
Client Project ID: Stanley Tools/C744

QC Batch: 27894 Analysis Method: EPA 7470
QC Batch Method: EPA 7470 Analysis Description: Mercury, CVAAS
Associated Lab Samples: 501212666

METHOD BLANK: 501216469
Associated Lab Samples: 501212666

Parameter	Units	Blank Result	Reporting Limit	Footnotes
Mercury	mg/l	ND	0.0020	

LABORATORY CONTROL SAMPLE: 501216477

Parameter	Units	Spike Conc.	LCS Result	LCS % Rec	Footnotes
Mercury	mg/l	0.0050	0.0047	93	

MATRIX SPIKE & MATRIX SPIKE DUPLICATE: 501216485 501216493

Parameter	Units	501160261 Result	Spike Conc.	MS Result	MSD Result	MS % Rec	MSD % Rec	RPD	Footnotes
Mercury	mg/l	0.00000	0.0050	0.0046	0.0046	93	92	1	

REPORT OF LABORATORY ANALYSIS
This report shall not be reproduced, except in full,
without the written consent of Pace Analytical Services, Inc.

Pace Analytical
www.pacelabs.com

Pace Analytical Services, Inc.
7726 Moller Road
Indianapolis, IN 46268
Phone: 317.875.5894
Fax: 317.872.6189

QUALITY CONTROL DATA

Lab Project Number: 5016256
Client Project ID: Stanley Tools/C744

QC Batch: 27895 Analysis Method: EPA 7470
QC Batch Method: EPA 7470 Analysis Description: Mercury, CVAAS, TCLP Leachate
Associated Lab Samples: 501212641 501212658

METHOD BLANK: 501216501
Associated Lab Samples: 501212641 501212658

Parameter	Units	Blank Result	Reporting Limit	Footnotes
Mercury	ug/l	ND	2.00	

LABORATORY CONTROL SAMPLE: 501216519

Parameter	Units	Spike Conc.	LCS Result	LCS % Rec	Footnotes
Mercury	ug/l	5.000	4.498	90	

LABORATORY CONTROL SAMPLE: 501217103

Parameter	Units	Spike Conc.	LCS Result	LCS % Rec	Footnotes
Mercury	ug/l	5.000	4.493	90	

MATRIX SPIKE & MATRIX SPIKE DUPLICATE: 501216527 501216535

Parameter	Units	501201131 Result	Spike Conc.	MS Result	MSD Result	MS % Rec	MSD % Rec	RPD	Footnotes
Mercury	ug/l	0.00480	5.000	4.365	4.129	87	82	6	

MATRIX SPIKE & MATRIX SPIKE DUPLICATE: 501216543 501216550

Parameter	Units	501210553 Result	Spike Conc.	MS Result	MSD Result	MS % Rec	MSD % Rec	RPD	Footnotes
Mercury	ug/l	0.00420	5.000	4.236	4.222	85	84	0	

REPORT OF LABORATORY ANALYSIS
This report shall not be reproduced, except in full,
without the written consent of Pace Analytical Services, Inc.

Pace Analytical Services, Inc.
7726 Moller Road
Indianapolis, IN 46268
Phone: 317.875.5894
Fax: 317.872.6189

QUALITY CONTROL DATA

Lab Project Number: 5016256
Client Project ID: Stanley Tools/C744

MATRIX SPIKE & MATRIX SPIKE DUPLICATE: 501216568 501216576

Parameter	Units	501212641 Result	Spike Conc.	MS Result	MSD Result	MS % Rec	MSD % Rec	RPD	Footnotes
Mercury	ug/l	0.00230	5.000	4.114	4.177	82	84	2	

REPORT OF LABORATORY ANALYSIS

This report shall not be reproduced, except in full,
without the written consent of Pace Analytical Services, Inc.

Pace Analytical Services, Inc.
7726 Moller Road
Indianapolis, IN 46268
Phone: 317.875.5894
Fax: 317.872.6189

QUALITY CONTROL DATA

Lab Project Number: 5016256
Client Project ID: Stanley Tools/C744

QC Batch: 27825
QC Batch Method: EPA 3010
Associated Lab Samples: 501212666

Analysis Method: EPA 6010
Analysis Description: Metals, ICP, Trace

METHOD BLANK: 501213318
Associated Lab Samples: 501212666

Parameter	Units	Blank Result	Reporting Limit	Footnotes
Arsenic	mg/l	ND	0.0500	
Barium	mg/l	ND	0.100	
Cadmium	mg/l	ND	0.0100	
Chromium	mg/l	ND	0.0500	
Lead	mg/l	ND	0.0100	
Selenium	mg/l	ND	0.0100	
Silver	mg/l	ND	0.0500	

LABORATORY CONTROL SAMPLE: 501213326

Parameter	Units	Spike Conc.	LCS Result	LCS % Rec	Footnotes
Arsenic	mg/l	1.000	1.032	103	
Barium	mg/l	1.000	0.9932	99	
Cadmium	mg/l	0.1000	0.0996	100	
Chromium	mg/l	1.000	0.9602	96	
Lead	mg/l	1.000	0.9305	93	
Selenium	mg/l	1.000	0.9408	94	
Silver	mg/l	0.1000	0.0928	93	

LABORATORY CONTROL SAMPLE: 501213334

Parameter	Units	Spike Conc.	LCS Result	LCS % Rec	Footnotes
Arsenic	mg/l	1.000	1.047	105	
Barium	mg/l	1.000	0.9758	98	
Cadmium	mg/l	0.1000	0.1029	103	
Chromium	mg/l	1.000	0.9807	98	

REPORT OF LABORATORY ANALYSIS

This report shall not be reproduced, except in full,
without the written consent of Pace Analytical Services, Inc.

Pace Analytical™
www.pacelabs.com

Pace Analytical Services, Inc.
7726 Moller Road
Indianapolis, IN 46268
Phone: 317.875.5894
Fax: 317.872.6189

QUALITY CONTROL DATA

Lab Project Number: 5016256
Client Project ID: Stanley Tools/C744

LABORATORY CONTROL SAMPLE: 501213334

Parameter	Units	Spike Conc.	LCS Result	LCS % Rec	Footnotes
Lead	mg/l	1.000	0.9905	99	
Selenium	mg/l	1.000	0.9889	99	
Silver	mg/l	0.1000	0.0937	94	

MATRIX SPIKE & MATRIX SPIKE DUPLICATE: 501213342 501213359

Parameter	Units	501160212 Result	Spike Conc.	MS Result	MSD Result	MS % Rec	MSD % Rec	RPD	Footnotes
Arsenic	mg/l	0.06420	1.000	1.149	1.151	108	109	0	
Barium	mg/l	0.1073	1.000	1.096	1.093	99	98	0	
Cadmium	mg/l	0.00052	0.1000	0.1040	0.1043	104	104	0	
Chromium	mg/l	0.00260	1.000	0.9951	0.9940	99	99	0	
Lead	mg/l	0	1.000	1.016	1.012	102	101	0	
Selenium	mg/l	0.01375	1.000	1.018	1.029	100	102	1	
Silver	mg/l	0	0.1000	0.0954	0.0948	95	95	1	

MATRIX SPIKE & MATRIX SPIKE DUPLICATE: 501213367 501213375

Parameter	Units	501160410 Result	Spike Conc.	MS Result	MSD Result	MS % Rec	MSD % Rec	RPD	Footnotes
Arsenic	mg/l	0.3486	1.000	1.437	1.458	109	111	1	
Barium	mg/l	0.2704	1.000	1.245	1.254	98	98	1	
Cadmium	mg/l	0	0.1000	0.1038	0.1055	104	106	2	
Chromium	mg/l	0.00908	1.000	1.007	1.026	100	102	2	
Lead	mg/l	0	1.000	1.024	1.034	102	104	1	
Selenium	mg/l	0.03834	1.000	1.050	1.063	101	102	1	
Silver	mg/l	0	0.1000	0.0963	0.0975	96	98	1	

MATRIX SPIKE & MATRIX SPIKE DUPLICATE: 501213383 501213391

Parameter	Units	501204275 Result	Spike Conc.	MS Result	MSD Result	MS % Rec	MSD % Rec	RPD	Footnotes
Arsenic	mg/l	0	1.000	1.062	1.067	106	107	0	

REPORT OF LABORATORY ANALYSIS

This report shall not be reproduced, except in full,
without the written consent of Pace Analytical Services, Inc.

Pace Analytical
www.pacelabs.com

Pace Analytical Services, Inc.
7726 Moller Road
Indianapolis, IN 46268
Phone: 317.875.5894
Fax: 317.872.6189

QUALITY CONTROL DATA

Lab Project Number: 5016256
Client Project ID: Stanley Tools/C744

MATRIX SPIKE & MATRIX SPIKE DUPLICATE: 501213383 501213391

Parameter	Units	501204275 Result	Spike Conc.	MS Result	MSD Result	MS % Rec	MSD % Rec	RPD	Footnotes
Barium	mg/l	0.04462	1.000	1.018	1.018	97	97	0	
Cadmium	mg/l	0.00079	0.1000	0.1003	0.1004	100	100	0	
Chromium	mg/l	0	1.000	0.9506	0.9580	95	96	1	
Lead	mg/l	0	1.000	0.9797	0.9833	98	98	0	
Selenium	mg/l	0.00200	1.000	1.006	1.008	100	101	0	
Silver	mg/l	0	0.1000	0.0971	0.0967	97	97	0	

REPORT OF LABORATORY ANALYSIS

This report shall not be reproduced, except in full,
without the written consent of Pace Analytical Services, Inc.

Pace Analytical
www.pacelabs.com

Pace Analytical Services, Inc.
7726 Moller Road
Indianapolis, IN 46268
Phone: 317.875.5894
Fax: 317.872.6189

QUALITY CONTROL DATA

Lab Project Number: 5016256
Client Project ID: Stanley Tools/C744

QC Batch: 27892 Analysis Method: EPA 6010
QC Batch Method: EPA 3010 Analysis Description: RCRA Metals, ICP, TCLP Leach.
Associated Lab Samples: 501212641 501212658

METHOD BLANK: 501216063
Associated Lab Samples: 501212641 501212658

Parameter	Units	Blank Result	Reporting Limit	Footnotes
Arsenic	ug/l	ND	50.0	
Barium	ug/l	ND	100.	
Cadmium	ug/l	ND	10.0	
Chromium	ug/l	ND	50.0	
Lead	ug/l	ND	10.0	
Selenium	ug/l	ND	10.0	
Silver	ug/l	ND	50.0	

LABORATORY CONTROL SAMPLE: 501216055

Parameter	Units	Spike Conc.	LCS Result	LCS % Rec	Footnotes
Arsenic	ug/l	1000	1126	113	
Barium	ug/l	1000	996.3	100	
Cadmium	ug/l	100	111.6	112	
Chromium	ug/l	1000	1036	104	
Lead	ug/l	1000	1095	110	
Selenium	ug/l	1000	1093	109	
Silver	ug/l	100	104.6	105	

LABORATORY CONTROL SAMPLE: 501216071

Parameter	Units	Spike Conc.	LCS Result	LCS % Rec	Footnotes
Arsenic	ug/l	1000	1041	104	
Barium	ug/l	1000	1011	101	
Cadmium	ug/l	100	106.6	107	
Chromium	ug/l	1000	1011	101	

REPORT OF LABORATORY ANALYSIS
This report shall not be reproduced, except in full,
without the written consent of Pace Analytical Services, Inc.

Pace Analytical
www.pacelabs.com

Pace Analytical Services, Inc.
7726 Moller Road
Indianapolis, IN 46268
Phone: 317.875.5894
Fax: 317.872.6189

QUALITY CONTROL DATA

Lab Project Number: 5016256
Client Project ID: Stanley Tools/C744

LABORATORY CONTROL SAMPLE: 501216071

Parameter	Units	Spike Conc.	LCS Result	LCS % Rec	Footnotes
Lead	ug/l	1000	1030	103	
Selenium	ug/l	1000	1007	101	
Silver	ug/l	100	94.57	95	

MATRIX SPIKE & MATRIX SPIKE DUPLICATE: 501216030 501216048

Parameter	Units	501210322 Result	Spike Conc.	MS Result	MSD Result	MS % Rec	MSD % Rec	RPD	Footnotes
Lead	ug/l	6.540	1000.00	924.0	964.7	92	96	4	

MATRIX SPIKE & MATRIX SPIKE DUPLICATE: 501216089 501216097

Parameter	Units	501210553 Result	Spike Conc.	MS Result	MSD Result	MS % Rec	MSD % Rec	RPD	Footnotes
Arsenic	ug/l	16.88	1000.00	1098	1118	108	110	2	
Barium	ug/l	507.2	1000.00	1441	1462	93	96	1	
Cadmium	ug/l	2.364	100.00	108.4	110.1	106	108	2	
Chromium	ug/l	0.5099	1000.00	985.5	995.8	98	100	1	
Lead	ug/l	17.20	1000.00	1079	1089	106	107	1	
Selenium	ug/l	4.190	1000.00	1057	1068	105	106	1	
Silver	ug/l	0	100.00	102.2	103.2	102	103	1	

MATRIX SPIKE & MATRIX SPIKE DUPLICATE: 501216105 501216113

Parameter	Units	501210660 Result	Spike Conc.	MS Result	MSD Result	MS % Rec	MSD % Rec	RPD	Footnotes
Lead	ug/l	2.048	1000.00	1043	1036	104	103	1	

MATRIX SPIKE & MATRIX SPIKE DUPLICATE: 501216121 501216139

Parameter	Units	501212641 Result	Spike Conc.	MS Result	MSD Result	MS % Rec	MSD % Rec	RPD	Footnotes

REPORT OF LABORATORY ANALYSIS

This report shall not be reproduced, except in full,
without the written consent of Pace Analytical Services, Inc.

Pace Analytical
www.pacelabs.com

Pace Analytical Services, Inc.
7726 Moller Road
Indianapolis, IN 46268
Phone: 317.875.5894
Fax: 317.872.6189

QUALITY CONTROL DATA

Lab Project Number: 5016256
Client Project ID: Stanley Tools/C744

MATRIX SPIKE & MATRIX SPIKE DUPLICATE: 501216121 501216139

Parameter	Units	501212641 Result	Spike Conc.	MS Result	MSD Result	MS % Rec	MSD % Rec	RPD	Footnotes
Arsenic	ug/l	1.582	1000.00	1120	1103	112	110	2	
Barium	ug/l	624.2	1000.00	1587	1576	96	95	1	
Cadmium	ug/l	2.654	100.00	109.1	108.0	106	105	1	
Chromium	ug/l	12.53	1000.00	991.7	983.8	98	97	1	
Lead	ug/l	2.895	1000.00	1081	1063	108	106	2	
Selenium	ug/l	9.115	1000.00	1073	1059	106	105	1	
Silver	ug/l	0	100.00	105.7	104.6	106	105	1	

MATRIX SPIKE & MATRIX SPIKE DUPLICATE: 501216147 501216154

Parameter	Units	501207294 Result	Spike Conc.	MS Result	MSD Result	MS % Rec	MSD % Rec	RPD	Footnotes
Arsenic	ug/l	0	1000.00	1076	1048	108	105	3	
Barium	ug/l	601.4	1000.00	1605	1562	100	96	3	
Cadmium	ug/l	1.524	100.00	104.7	102.2	103	101	3	
Chromium	ug/l	432.4	1000.00	1395	1356	96	92	3	
Lead	ug/l	0	1000.00	1030	1006	103	101	2	
Selenium	ug/l	625.1	1000.00	1660	1630	104	100	2	
Silver	ug/l	0	100.00	105.6	100.4	106	100	5	

REPORT OF LABORATORY ANALYSIS

This report shall not be reproduced, except in full,
without the written consent of Pace Analytical Services, Inc.

Pace Analytical
www.pacelabs.com

Pace Analytical Services, Inc.
7726 Moller Road
Indianapolis, IN 46268
Phone: 317.875.5894
Fax: 317.872.6189

Lab Project Number: 5016256
Client Project ID: Stanley Tools/C744

QUALITY CONTROL DATA PARAMETER FOOTNOTES

Consistent with EPA guidelines, unrounded concentrations are displayed and have been used to calculate % Rec and RPD values.

LCS(D)	Laboratory Control Sample (Duplicate)
MS(D)	Matrix Spike (Duplicate)
DUP	Sample Duplicate
ND	Not Detected
NC	Not Calculable
RPD	Relative Percent Difference
(S)	Surrogate
[1]	Matrix (MS) and or surrogate spike recovery (S) was affected by the sample matrix. Refer to the batch QC recoveries blank and LCS to demonstrate that the analytical system was operating in control.

REPORT OF LABORATORY ANALYSIS

This report shall not be reproduced, except in full,
without the written consent of Pace Analytical Services, Inc.

Pace Analytical

The Chain-of-Custody is a LEGAL DOCUMENT. All relevant fields must be completed accurately.

552862

Page: 1 of 4

Required Client Information: **Section A**

Company	ENTACT
Address	1360 N. WOODDALE RD SUITE A WOODDALE IL 60191
Phone	630-616-2100
Fax	630-616-7203

Required Client Information: **Section B**

Report To:	
Invoice To:	ENTACT
P.O.	
Project Name:	STANLEY TOOLS
Project Number:	C 744

Client Information (Check quote/contract):

Requested Due Date: *TAT: 7

* Turn around times less than 14 days subject to laboratory and contractual obligations and may result in a Rush Turnaround Surcharge.

Turn Around Time (TAT) in calendar days.

To Be Completed by Pace Analytical and Client **Section C**

Quote Reference:	
Project Manager:	
Project #:	
Profile #:	

Section D **Required** Client Information:

SAMPLE ID

One character per box. (A–Z, 0–9 / .–) Sample IDs MUST BE UNIQUE

Valid Matrix Codes

MATRIX	CODE
WATER	WT
SOIL	SL
OIL	OL
WIPE	WP
AIR	AR
TISSUE	TS
OTHER	OT

Requested Analysis: PCBs, PAHs, VOC TCLP, RCRA MET TCLP, VOC, RCRA METALS

ITEM #	SAMPLE ID	MATRIX CODE	DATE COLLECTED (mm / dd / yy)	TIME COLLECTED (hh:mm a/p)	# Containers	Unpreserved	H_2SO_4	HNO_3	HCl	NaOH	$Na_2S_2O_3$	PCBs	PAHs	VOC TCLP	RCRA MET TCLP	VOC	RCRA METALS	Remarks / Lab ID
1	WCS-008	SL	8/23/01	9:30 A	2							✓	✓	✓	✓			
2	WCS-009	SL	8/23/01	9:45 A	2							✓	✓	✓	✓			
3	WCW-001	WT	8/23/01	10:15 A	5							✓	✓			✓	✓	
4																		
5																		
6	008 BOX BKRV025264																	
7	009 BOX BKRV025834																	
8																		
9	001 FRACTANK																	
10																		
11																		
12																		

Sample Condition		Sample Notes	Item No.	Relinquished By / Company	Date	Time	Accepted By / Company	Date	Time
Temp in °C:				Tim Straub ENTACT	8/23/01	11:00 am			
Received on ICE:	Y / N								
Sealed Cooler:	Y / N								
Samples Intact:	Y / N								

Additional Comments:

SAMPLER NAME AND SIGNATURE

PRINT Name of SAMPLER: TIM STRAUB

SIGNATURE of SAMPLER: [signature]

DATE Signed: (MM / DD / YY) 8/23/01

SEE REVERSE SIDE FOR INSTRUCTIONS

APPENDIX D

WASTE DISPOSAL MANIFESTS

NON-HAZARDOUS WASTE MANIFEST

NO. 27182

GENERATOR: JCI - STANLEY TOOL WORKS
425 W. FRANK ST.
FOWLERVILLE, MI.

Transporter: INDUSTRIAL MATERIALS CLEARANCE

Vehicle No.: 63

DELIVER TO:

- [ ] Autumn Hills RDF (Zeeland, MI)
- [ ] Waters Landfill (Frederic, MI)
- [ ] Eagle Valley RDF (Orion, MI)
- [ ] Glen's Sanitary Landfill (Maple City, MI)
- [ ] Hastings Sanitary Services (Hastings, MI)
- [ ] McGill Road Landfill (Jackson, MI)
- [ ] Northern Oaks RDF (Harrison, MI)
- [ ] Pine Tree Acres, Inc. (Lenox, MI)
- [ ] People's Landfill, Inc. (Birch Run, MI)
- [ ] Tri-City RDF (Carsonville, MI)
- [ ] Venice Park RDF (Lennon, MI)
- [ ] Westside RDF (Three Rivers, MI)
- [x] Woodland Meadows RDF (Van Buren, MI)

Company Responsible for Disposal Charges: ENTACT

Approval No.	Name of Waste Stream	Physical Description (i.e., solid, color)	Volume
15-1372	CONTAMINATED SOIL	SOLID, BROWN	Gross Wt.: 25 YRds.
			Tare Wt.:
			Net Wt.:

Generator Signature: Joseph S Cretin / ENTACT Date: 9-21-01

Transporter Signature: [signature] Date: 9-21-01

Destination Signature: [signature] 306735 Date:

White: Generator Canary: Disposal Facility Pink: Carrier Gold: Generator

111-005M

NON-HAZARDOUS WASTE MANIFEST

NO. 27183

GENERATOR:
JCI - STANLEY TOOL WORKS
425 W. FRANK ST.
FOWLERVILLE, MI

Transporter: INDUSTRIAL MATERIALS CLEARANCE

Vehicle No.: 73

DELIVER TO:

- [ ] Autumn Hills RDF (Zeeland, MI)
- [ ] Waters Landfill (Frederic, MI)
- [ ] Eagle Valley RDF (Orion, MI)
- [ ] Glen's Sanitary Landfill (Maple City, MI)
- [ ] Hastings Sanitary Services (Hastings, MI)
- [ ] McGill Road Landfill (Jackson, MI)
- [ ] Northern Oaks RDF (Harrison, MI)
- [ ] Pine Tree Acres, Inc. (Lenox, MI)
- [ ] People's Landfill, Inc. (Birch Run, MI)
- [ ] Tri-City RDF (Carsonville, MI)
- [ ] Venice Park RDF (Lennon, MI)
- [ ] Westside RDF (Three Rivers, MI)
- [x] Woodland Meadows RDF (Van Buren, MI)

Company Responsible for Disposal Charges:
ENTACT

Approval No.	Name of Waste Stream	Physical Description (i.e., solid, color)	Volume
15-1372	CONTAMINATED SOIL	SOLID, BROWN	25 YRDS Gross Wt.:
			Tare Wt.:
			Net Wt.:

Generator Signature: Joseph Martin / ENTACT Date: 9-21-01

Transporter Signature: Jeff Horton Date: 9-21-01

Destination Signature: 306710 Date:

White: Generator Canary: Disposal Facility Pink: Carrier Gold: Generator

111-005M

NON-HAZARDOUS WASTE MANIFEST

NO. 22466

GENERATOR:
JCI - STANLEY TOOL WORKS
425 W. FRANK ST.
FOWLERVILLE, MI

Transporter: ALL IN ONE DISPOSAL

Vehicle No.: 112

DELIVER TO:

- [ ] Autumn Hills RDF (Zeeland, MI)
- [ ] Waters Landfill (Frederic, MI)
- [ ] Eagle Valley RDF (Orion, MI)
- [ ] Glen's Sanitary Landfill (Maple City, MI)
- [ ] Hastings Sanitary Services (Hastings, MI)
- [ ] McGill Road Landfill (Jackson, MI)
- [ ] Northern Oaks RDF (Harrison, MI)
- [ ] Pine Tree Acres, Inc. (Lenox, MI)
- [ ] People's Landfill, Inc. (Birch Run, MI)
- [ ] Tri-City RDF (Carsonville, MI)
- [ ] Venice Park RDF (Lennon, MI)
- [ ] Westside RDF (Three Rivers, MI)
- [x] Woodland Meadows RDF (Van Buren, MI)

Company Responsible for Disposal Charges:
ENTACT

Approval No.	Name of Waste Stream	Physical Description (i.e., solid, color)	Volume
15-1372	CONTAMINATED SOIL	SOLID, BROWN	Gross Wt.: 77020 LBS. 30 YARD
			Tare Wt.: 51760 LBS.
			Net Wt.: 25260 LBS.

Generator Signature: Joseph L. Martinez / ENTACT Date: ~~9-20-01~~ 9-21-01

Transporter Signature: Andy Jones Date: 9-21-01

Destination Signature: Date: 306447 MG

White: Generator Canary: Disposal Facility Pink: Carrier Gold: Generator

111-005M

NON-HAZARDOUS WASTE MANIFEST

NO. 22467

GENERATOR:
JCI - STANLEY TOOL WORKS
425 W. FRANK ST.
FOWLERVILLE, MI

Transporter: INDUSTRIAL MATERIAL CLEARANCE

Vehicle No.: 63

DELIVER TO:

- [ ] Autumn Hills RDF (Zeeland, MI)
- [ ] Waters Landfill (Frederic, MI)
- [ ] Eagle Valley RDF (Orion, MI)
- [ ] Glen's Sanitary Landfill (Maple City, MI)
- [ ] Hastings Sanitary Services (Hastings, MI)
- [ ] McGill Road Landfill (Jackson, MI)
- [ ] Northern Oaks RDF (Harrison, MI)
- [ ] Pine Tree Acres, Inc. (Lenox, MI)
- [ ] People's Landfill, Inc. (Birch Run, MI)
- [ ] Tri-City RDF (Carsonville, MI)
- [ ] Venice Park RDF (Lennon, MI)
- [ ] Westside RDF (Three Rivers, MI)
- [x] Woodland Meadows RDF (Van Buren, MI)

Company Responsible for Disposal Charges: ENTACT

Approval No.	Name of Waste Stream	Physical Description (i.e., solid, color)	Volume
15-1372	CONTAMINATED SOIL	SOLID, BROWN	Gross Wt.: 25 YDS
			Tare Wt.:
			Net Wt.:

Generator Signature: [signature] / ENTACT Date: 9-21-01

Transporter Signature: [signature] Date: 9/21/01

Destination Signature: _____ Date: 306542 MG

White: Generator Canary: Disposal Facility Pink: Carrier Gold: Generator

111-005M

NON-HAZARDOUS WASTE MANIFEST

NO. 22468

GENERATOR:
JCI - STANLEY TOOL WORKS
425 W. FRANK ST.
FOWLERVILLE, MI.

Transporter: INDUSTRIAL MATERIAL CLEARAGE

Vehicle No.: 73

DELIVER TO:

- [ ] Autumn Hills RDF (Zeeland, MI)
- [ ] Waters Landfill (Frederic, MI)
- [ ] Eagle Valley RDF (Orion, MI)
- [ ] Glen's Sanitary Landfill (Maple City, MI)
- [ ] Hastings Sanitary Services (Hastings, MI)
- [ ] McGill Road Landfill (Jackson, MI)
- [ ] Northern Oaks RDF (Harrison, MI)
- [ ] Pine Tree Acres, Inc. (Lenox, MI)
- [ ] People's Landfill, Inc. (Birch Run, MI)
- [ ] Tri-City RDF (Carsonville, MI)
- [ ] Venice Park RDF (Lennon, MI)
- [ ] Westside RDF (Three Rivers, MI)
- [x] Woodland Meadows RDF (Van Buren, MI)

Company Responsible for Disposal Charges:
ENTACT

Approval No.	Name of Waste Stream	Physical Description (i.e., solid, color)	Volume
15-1372	CONTAMINATED SOIL	SOLID BROWN	25 YRDS Gross Wt.:
			Tare Wt.:
			Net Wt.:

Generator Signature: Jack Christian / ENTACT Date: 9-21-01

Transporter Signature: Jeff Horton Date: 9-21-01

Destination Signature: _____ Date: 30654 MG

White: Generator Canary: Disposal Facility Pink: Carrier Gold: Generator

111-005M

NON-HAZARDOUS WASTE MANIFEST

NO. 27207

GENERATOR:
JCI - STANLEY TOOL WORKS
425 W. FRANK ST.
FOWLERVILLE, MI.

Transporter: ALL IN ON DISPOSAL

Vehicle No.: 112

DELIVER TO:

- [ ] Autumn Hills RDF (Zeeland, MI)
- [ ] Waters Landfill (Frederic, MI)
- [ ] Eagle Valley RDF (Orion, MI)
- [ ] Glen's Sanitary Landfill (Maple City, MI)
- [ ] Hastings Sanitary Services (Hastings, MI)
- [ ] McGill Road Landfill (Jackson, MI)
- [ ] Northern Oaks RDF (Harrison, MI)
- [ ] Pine Tree Acres, Inc. (Lenox, MI)
- [ ] People's Landfill, Inc. (Birch Run, MI)
- [ ] Tri-City RDF (Carsonville, MI)
- [ ] Venice Park RDF (Lennon, MI)
- [ ] Westside RDF (Three Rivers, MI)
- [x] Woodland Meadows RDF (Van Buren, MI)

Company Responsible for Disposal Charges:
ENTACT

Approval No.	Name of Waste Stream	Physical Description (i.e., solid, color)	Volume
15-1372	CONTAMINATED SOIL	SOLID BROWN	Gross Wt.: 30yd
			Tare Wt.:
			Net Wt.:

Generator Signature: [signature] / ENTACT Date: 9-19-01

Transporter Signature: [signature] Date: 9-19-01

Destination Signature: [signature] 305773 Date:

White: Generator Canary: Disposal Facility Pink: Carrier Gold: Generator

111-005M

NON-HAZARDOUS WASTE MANIFEST

NO. 27184

GENERATOR:
JCI- STANLEY TOOL WORKS
425 W. FRANK ST.
FOWLERVILLE, MI.

Transporter: INDUSTRIAL MATERIAL CLEARANCE

Vehicle No.: 73
BOX # 025246

DELIVER TO:

- [ ] Autumn Hills RDF (Zeeland, MI)
- [ ] Waters Landfill (Frederic, MI)
- [ ] Eagle Valley RDF (Orion, MI)
- [ ] Glen's Sanitary Landfill (Maple City, MI)
- [ ] Hastings Sanitary Services (Hastings, MI)
- [ ] McGill Road Landfill (Jackson, MI)
- [ ] Northern Oaks RDF (Harrison, MI)
- [ ] Pine Tree Acres, Inc. (Lenox, MI)
- [ ] People's Landfill, Inc. (Birch Run, MI)
- [ ] Tri-City RDF (Carsonville, MI)
- [ ] Venice Park RDF (Lennon, MI)
- [ ] Westside RDF (Three Rivers, MI)
- [x] Woodland Meadows RDF (Van Buren, MI)

Company Responsible for Disposal Charges:
ENTACT

Approval No.	Name of Waste Stream	Physical Description (i.e., solid, color)	Volume
15-1372	CONTAMINATED SOIL	SOLID, BROWN	Gross Wt.: 25 YRDS.
			Tare Wt.:
			Net Wt.:

Generator Signature: Joseph G Carston / ENTACT Date: 9-22-01

Transporter Signature: [signature] Date: 9-22-01

Destination Signature: _____ Date: _____

White: Generator Canary: Disposal Facility Pink: Carrier Gold: Generator

111-005M

NON-HAZARDOUS WASTE MANIFEST

NO. 27184

GENERATOR:
JCI-STANLEY TOOL WORKS
425 W. FRANK ST.
FOWLERVILLE, MI.

Transporter: NATIONAL MATERIAL CORPORATE

Vehicle No.: 73

DELIVER TO:

- [ ] Autumn Hills RDF (Zeeland, MI)
- [ ] Waters Landfill (Frederic, MI)
- [ ] Eagle Valley RDF (Orion, MI)
- [ ] Glen's Sanitary Landfill (Maple City, MI)
- [ ] Hastings Sanitary Services (Hastings, MI)
- [ ] McGill Road Landfill (Jackson, MI)
- [ ] Northern Oaks RDF (Harrison, MI)
- [ ] Pine Tree Acres, Inc. (Lenox, MI)
- [ ] People's Landfill, Inc. (Birch Run, MI)
- [ ] Tri-City RDF (Carsonville, MI)
- [ ] Venice Park RDF (Lennon, MI)
- [ ] Westside RDF (Three Rivers, MI)
- [x] Woodland Meadows RDF (Van Buren, MI)

Company Responsible for Disposal Charges:
EATON

Approval No.	Name of Waste Stream	Physical Description (i.e., solid, color)	Volume
K-1370	CONTAMINATED SOIL	SOLID BROWN	Gross Wt.: 25 YDS
			Tare Wt.:
			Net Wt.:

Generator Signature: [illegible] / EATON Date: 9-22-01

Transporter Signature: [illegible] Date: 9-22-01

Destination Signature: [illegible] Date:

White: Generator Canary: Disposal Facility Pink: Carrier Gold: Generator

111-005M

NON-HAZARDOUS WASTE MANIFEST

NO. 27185

GENERATOR:
JCI - STANLEY TOOL WORKS
425 W. FRANK ST.
FOWLERVILLE, MI

Transporter: INDUSTRIAL MATERIAL CLEARANCE

Vehicle No.: 63

ROLL OFF BOX # 026506

DELIVER TO:

- [ ] Autumn Hills RDF (Zeeland, MI)
- [ ] Waters Landfill (Frederic, MI)
- [ ] Eagle Valley RDF (Orion, MI)
- [ ] Glen's Sanitary Landfill (Maple City, MI)
- [ ] Hastings Sanitary Services (Hastings, MI)
- [ ] McGill Road Landfill (Jackson, MI)
- [ ] Northern Oaks RDF (Harrison, MI)
- [ ] Pine Tree Acres, Inc. (Lenox, MI)
- [ ] People's Landfill, Inc. (Birch Run, MI)
- [ ] Tri-City RDF (Carsonville, MI)
- [ ] Venice Park RDF (Lennon, MI)
- [ ] Westside RDF (Three Rivers, MI)
- [x] Woodland Meadows RDF (Van Buren, MI)

Company Responsible for Disposal Charges:
ENTRACT

Approval No.	Name of Waste Stream	Physical Description (i.e., solid, color)	Volume
15-1372	CONTAMINATED SOIL	SOLID, BROWN	Gross Wt.: 25 Yrds.
			Tare Wt.:
			Net Wt.:

Generator Signature: [signature] / ENTRACT Date: 9-21-01

Transporter Signature: [signature] Date: 9-21-01

Destination Signature: _____ Date: _____

White: Generator Canary: Disposal Facility Pink: Carrier Gold: Generator

111-005M

NON-HAZARDOUS WASTE MANIFEST

NO. 27185

GENERATOR:
JCI - STANLEY TOOL WORKS
425 W. FRANK ST.
FOWLERVILLE, MI.

Transporter: INDUSTRIAL MATERIAL CLEARANCE

Vehicle No.: 63

DELIVER TO:

- [ ] Autumn Hills RDF (Zeeland, MI)
- [ ] Waters Landfill (Frederic, MI)
- [ ] Eagle Valley RDF (Orion, MI)
- [ ] Glen's Sanitary Landfill (Maple City, MI)
- [ ] Hastings Sanitary Services (Hastings, MI)
- [ ] McGill Road Landfill (Jackson, MI)
- [ ] Northern Oaks RDF (Harrison, MI)
- [ ] Pine Tree Acres, Inc. (Lenox, MI)
- [ ] People's Landfill, Inc. (Birch Run, MI)
- [ ] Tri-City RDF (Carsonville, MI)
- [ ] Venice Park RDF (Leanon, MI)
- [ ] Westside RDF (Three Rivers, MI)
- [x] Woodland Meadows RDF (Van Buren, MI)

Company Responsible for Disposal Charges:
ERTART

Approval No.	Name of Waste Stream	Physical Description (i.e., solid, color)	Volume
15-1372	CONTAMINATED SOIL	SOLID, BROWN	Gross Wt.: 25 YRDS
			Tare Wt.:
			Net Wt.:

Generator Signature: [signature] Date: 9-21-01

Transporter Signature: [signature] Date: 9-21-01

Destination Signature: _____ Date: 306981 MG

White: Generator Canary: Disposal Facility Pink: Carrier Gold: Generator

111-00SM

NON-HAZARDOUS WASTE MANIFEST

NO. 27186

GENERATOR:
JCI - STANLEY TOOL WORKS
425 W. FRANK ST.
FOWLERVILLE, MI.

Transporter: INDUSTRIAL MATERIAL CLEARANCE

Vehicle No.: 23

ROLL OFF BOX # 025264

DELIVER TO:

- [ ] Autumn Hills RDF (Zeeland, MI)
- [ ] Waters Landfill (Frederic, MI)
- [ ] Eagle Valley RDF (Orion, MI)
- [ ] Glen's Sanitary Landfill (Maple City, MI)
- [ ] Hastings Sanitary Services (Hastings, MI)
- [ ] McGill Road Landfill (Jackson, MI)
- [ ] Northern Oaks RDF (Harrison, MI)
- [ ] Pine Tree Acres, Inc. (Lenox, MI)
- [ ] People's Landfill, Inc. (Birch Run, MI)
- [ ] Tri-City RDF (Carsonville, MI)
- [ ] Venice Park RDF (Lennon, MI)
- [ ] Westside RDF (Three Rivers, MI)
- [x] Woodland Meadows RDF (Van Buren, MI)

Company Responsible for Disposal Charges:
ENTART

Approval No.	Name of Waste Stream	Physical Description (i.e., solid, color)	Volume
15-1372	CONTAMINATED SOIL	SOLID, BROWN	Gross Wt.: 25 YRDS.
			Tare Wt.:
			Net Wt.:

Generator Signature: Joseph J Carter / ENTART Date: 9-21-01

Transporter Signature: Jeff Horton Date: 9-21-01

Destination Signature: _____ Date: _____

White: Generator Canary: Disposal Facility Pink: Carrier Gold: Generator

111-005M

ID:63061...

NON-HAZARDOUS WASTE M... ST

NO. ...186

...ley T... Wo...

425 ... FRAN... T.

FOC... RVIL...

...NDUSTR... ...RAL CLEARANCE

Ashland H...

...ndfill (Freder...

...RDF (O...

...ill R... ...MI)

People's ... Birch Run,

Tri-City RDF ... MI)

...and Meadows R... ...n, MI)

...le for Disposal Charges:

CONTACT

Approval No.	Name of Waste Stream	Physical Description (i.e., solid, color)	Volume
15-1372	CONTAMINATED SOIL	Solid, BROWN	Gross Wt.: 25 Yrds.
			Tare Wt.:
			Net Wt.:

Generator Signature: Joseph J Carter / EMART Date: 9-21-01

ransporter Signature: Jeff Horton Date: 9-21-01

stination Signature: _____ Date: 307418MG

White: Generator Canary: Disposal Facility Pink: Carrier Gold: Generator

NON-HAZARDOUS WASTE MANIFEST

NO. 22470

GENERATOR:
JCI - STANLEY TOOL WORKS
425 W. FRANK ST.
FOWLERVILLE ST.

Transporter: ALL IN ONE DISPOSAL

Vehicle No.: 112
ROLL OFF BX #025104

DELIVER TO:

- [ ] Autumn Hills RDF (Zeeland, MI)
- [ ] Waters Landfill (Frederic, MI)
- [ ] Eagle Valley RDF (Orion, MI)
- [ ] Glen's Sanitary Landfill (Maple City, MI)
- [ ] Hastings Sanitary Services (Hastings, MI)
- [ ] McGill Road Landfill (Jackson, MI)
- [ ] Northern Oaks RDF (Harrison, MI)
- [ ] Pine Tree Acres, Inc. (Lenox, MI)
- [ ] People's Landfill, Inc. (Birch Run, MI)
- [ ] Tri-City RDF (Carsonville, MI)
- [ ] Venice Park RDF (Lennon, MI)
- [ ] Westside RDF (Three Rivers, MI)
- [x] Woodland Meadows RDF (Van Buren, MI)

Company Responsible for Disposal Charges:
ENTACT

Approval No.	Name of Waste Stream	Physical Description (i.e., solid, color)	Volume
15-1372	CONTAMINATED SOIL	SOLID BROWN	Gross Wt.:
			Tare Wt.:
			Net Wt.:

Generator Signature: Joseph A. Cantin / ENTACT Date: 9-21-01

Transporter Signature: Andy [illegible] Date: 1 21 01

Destination Signature: _____ Date: _____

White: Generator Canary: Disposal Facility Pink: Carrier Gold: Generator

111-005M

26027

NON-HAZARDOUS WASTE MANIFEST

NO. 22470

GENERATOR:
JCI - STANLEY TOOL WORKS
425 W. FRANK ST.
FOWLERVILLE ST.

Transporter: ALL IN ONE DISPOSAL

Vehicle No.: 112

DELIVER TO:

- [ ] Autumn Hills RDF (Zeeland, MI)
- [ ] Waters Landfill (Frederic, MI)
- [ ] Eagle Valley RDF (Orion, MI)
- [ ] Glen's Sanitary Landfill (Maple City, MI)
- [ ] Hastings Sanitary Services (Hastings, MI)
- [ ] McGill Road Landfill (Jackson, MI)
- [ ] Northern Oaks RDF (Harrison, MI)
- [ ] Pine Tree Acres, Inc. (Lenox, MI)
- [ ] People's Landfill, Inc. (Birch Run, MI)
- [ ] Tri-City RDF (Carsonville, MI)
- [ ] Venice Park RDF (Lennon, MI)
- [ ] Westside RDF (Three Rivers, MI)
- [x] Woodland Meadows RDF (Van Buren, MI)

Company Responsible for Disposal Charges:
ENTACT

Approval No.	Name of Waste Stream	Physical Description (i.e., solid, color)	Volume
15-1372	CONTAMINATED SOIL	SOLID BROWN	Gross Wt.: 30
			Tare Wt.: 51260
			Net Wt.: 8140

Generator Signature: Joseph S Cantin / ENTACT Date: 9-21-01

Transporter Signature: Andy [illegible] Date: 9-21-01

Destination Signature: [illegible] 306596 Date:

White: Generator Canary: Disposal Facility Pink: Carrier Gold: Generator

111-005M

WASTE MANAGEMENT DIVISION
MICHIGAN DEPARTMENT OF ENVIRONMENTAL QUALITY

DO NOT WRITE IN THIS SPACE
ATT. ☐ DIS. ☐ REJ. ☐ PR. ☐

amended 37,240
Failure to file may subject you to criminal and/or civil penalties under Section 324.11151 or 324.12148 of the NRE Part 31

Please print or type. Form Approved. OMB No. 2050-0039

UNIFORM HAZARDOUS WASTE MANIFEST

1. Generator's US EPA ID No. MDC008124233
Manifest Document No. 24520
2. Page 1 of 1
Information in the shaded areas is not required by Federal law.

3. Generator's Name and Mailing Address
JOHNSON CONTROLS
425 W. FRANK STREET
POWLERVILLE, MI 48336
4. Generator's Phone ( ) -

State Generator's ID MI 8344520

5. Transporter 1 Company Name: EQ INDUSTRIAL SERVICES
6. US EPA ID Number: MDD981131292

7. Transporter 2 Company Name
8. US EPA ID Number

9. Designated Facility Name and Site Address
MICHIGAN DISPOSAL WASTE TREATMENT PLANT
49350 NORTH I-94 SERVICE DRIVE
BELLEVILLE, MI 48111
10. US EPA ID Number: MDD007124631

11. US DOT Description (Including Proper Shipping Name, Hazard Class, and ID NUMBER).	12. Containers No.	Type	13. Total Quantity	14. Unit Wt/Vol
a. NON-HAZARDOUS, NON-REGULATED LIQUID	001	TT	X1400	G
b.				
c.				
d.				

GENERATOR

12. Additional Descriptions for Materials Listed Above
[illegible]

15. Special Handling Instructions and Additional Information
24 HOUR EMERGENCY PHONE NUMBER: 800-888-3975
Reference: 2484600 - 0

16. GENERATOR'S CERTIFICATION: I hereby declare that the contents of this consignment are fully and accurately described above by proper shipping name and are classified, packed, marked, and labeled, and are in all respects in proper condition for transport by highway according to applicable international and national government regulations. If I am a large quantity generator, I certify that I have a program in place to reduce the volume and toxicity of waste generated to the degree I have determined to be economically practicable and that I have selected the practicable method of treatment, storage, or disposal currently available to me which minimizes the present and future threat to human health and the environment; OR: if I am a small quantity generator, I have made a good faith effort to minimize my waste generation and select the best waste management method that is available to me and that I can afford.

Printed/Typed Name: X
Signature: X
Date: Month Day Year 11/01/01

TRANSPORTER

17. Transporter 1 Acknowledgement of Receipt of Materials
Printed/Typed Name: John D. Malinen
Signature:
Date: Month Day Year 11/01/01

18. Transporter 2 Acknowledgement of Receipt of Materials
Printed/Typed Name
Signature
Date: Month Day Year

FACILITY

19. Discrepancy Indication Space

20. Facility Owner or Operator: Certification of receipt of hazardous materials covered by this manifest except as noted in Item 19.
Printed/Typed Name: Kelly Clark
Signature:
Date: Month Day Year 11/01/01

ALL SPILLS MUST BE REPORTED TO THE MICHIGAN POLLUTION EMERGENCY ALERTING SYSTEM, IN MICHIGAN AT 1-800-292-4706 OR OUT OF STATE AT 517-373-7660 AND THE NATIONAL RESPONSE CENTER AT 1-800-424-8802 24 HOURS PER DAY.

EPA Form 8700-22 (Rev. 9/88)
TSDF COPY
EQP 5210 Rev. 5/98