CMS Energy/Tondu Corporation
T.E.S. Filer City Generating Plant
Filer City, Michigan

Units #1 & #2
Particulate Emission Test
Total Gaseous Non-Methane Organics (TGNMO) Test

Testing Conducted On:
August 20-22, 2012

Report Submitted: October 2012

Testing Conducted By:
Mr. Brian Pape, Mr. Brian Miska & Mr. Calvin (Joe) Mason
Consumers Energy Company
Engineering Services Department
Equipment Performance Testing Section

CMS Energy/Tondu Corporation
T.E.S. Filer City Generating Plant
Filer City, Michigan

Units #1 & #2
Particulate Emission Test
Total Gaseous Non-Methane Organics (TGNMO) Test

Testing Conducted On:
August 20-22, 2012

Report Submitted: October 2012

Testing Conducted By:
Mr. Brian Pape, Mr. Brian Miska & Mr. Calvin (Joe) Mason
Consumers Energy Company
Engineering Services Department
Equipment Performance Testing Section

TABLE OF CONTENTS

INTRODUCTION 1

SUMMARY OF RESULTS 3

SOURCE DESCRIPTION 5

SAMPLING AND ANALYTICAL PROCEDURES 6

TEST RESULTS AND DISCUSSION 8

Figures

T.E.S. Filer City Plant Units 1 & 2 Stack Test Port Locations (elev. looking east) ..... Figure 1

Sampling Train Flow Diagram ..... Figure 2a

Probe Assembly Diagram ..... Figure 2b

T.E.S. Filer City Plant Unit 1 Particulate Test Point Locations ..... Figure 3a

T.E.S. Filer City Plant Unit 2 Particulate Test Point Locations ..... Figure 3b

Attachments

Formulas Used to Calculate Results ..... Attachment 1

Unit #1 Verification of Absence of Cyclonic Flow ..... Attachment 2

Unit #1 PM Test Calculation Sheets ..... Attachment 3

Unit #1 PM Test Field and Laboratory Data Sheets ..... Attachment 4

Unit #1 TGNMO Test Calculation Sheets ..... Attachment 5

Unit #1 Operating Data ..... Attachment 6

Unit #2 Verification of Absence of Cyclonic Flow ..... Attachment 7

Unit #2 PM Test Calculation Sheets ..... Attachment 8

Unit #2 PM Test Field and Laboratory Data Sheets ..... Attachment 9

Unit #2 TGNMO Test Calculation Sheets ..... Attachment 10

Unit #2 Operating Data ..... Attachment 11

Fuel Analysis ..... Attachment 12

Calibration Data ..... Attachment 13

INTRODUCTION

This report summarizes the results of the emission testing for Particulate Matter (PM), and non-Methane Hydrocarbons (expressed as Total Gaseous Non-Methane Organics or TGNMO), conducted on August 20-22, 2012, on Units #1 & 2 at the T.E.S. Filer City Plant, located in Filer City, Michigan.

The purpose of the emission testing was to demonstrate compliance with the PM and non-Methane Hydrocarbons emission limits for Units #1 & #2, as identified in the facility's current renewable operating permit (ROP) No. MI-ROP-N1685-2008a. The emission testing was conducted in accordance with the ROP and a stack test protocol, which was submitted in July, 2012. The stack test protocol was approved by Mr. Rob Dickman of the Michigan DEQ Cadillac District Office on July 24, 2012. Mr. Dickman was present on September 21, 2012 to witness a portion of the stack testing.

The Filer City Generating Station, (SRN N1685; ORIS Code 50835), is a cogeneration power plant consisting of two solid fuel fired boilers which are used to produce electricity (supplied to Consumers Energy) and process steam (sent to a nearby paper mill). Additional detail on the plant can be found under the report heading "Source Description".

The PM sampling procedure, as outlined in Reference Method 17 of 40 CFR 60, Appendix A was followed throughout the test. In addition, equations contained in Method 5B of Michigan Rule 336.2011 were also utilized to determine the amount of excess air and correct the PM concentrations to 50% excess air (Attachment 1).

The TGNMO sampling incorporated specific calibration and sampling procedures as outlined in Reference Method 25A of 40 CFR 60, Appendix A, was followed throughout the test using a direct methane/non-methane hydrocarbon analyzer.

SOURCE INFORMATION

Tondu Energy Systems (TES)
Filer City Generating Station
700 Mee Street
Filer City, Michigan 49634

Contact: Mr. Richard (Rick) Brown (231) 723-6573 (ext. 103)

TESFiler0001167

TESTING FIRM INFORMATION

Consumers Energy Company
Equipment Performance Testing Section
J.C. Weadock Plant
2555 N. Weadock Highway
Essexville, MI 48732

Contact: Mr. Brian Pape (989) 891-3492

TESFiler0001168

SUMMARY OF RESULTS

During the testing period, Unit #1 burned a coal blend of approximately 53.5% eastern bituminous coal, 32.1% western Powder River Basin (PRB) coal and 14.4% Petroleum Coke (Pet coke), along with Tire Derived Fuel (TDF) at a rate of 1.12 tons/hr and wood waste (during approximately the second half of the second test run and the entire third test run) at a rate of 1.805 tons/hr. Testing was conducted as close to full load as possible (320 klb/hr steam flow), with an average unit load of 308.1 klb/hr steam flow.

During the testing period, Unit #2 burned a coal blend of approximately 53.5% eastern bituminous coal, 32.1% western Powder River Basin (PRB) coal and 14.4% Petroleum Coke (Pet coke), along with Tire Derived Fuel (TDF) at a rate of 1.63 tons/hr and wood waste (during approximately the second half of the second test run and the entire third test run) at a rate of 1.935 tons/hr. Testing was conducted as close to full load as possible (320 klb/hr steam flow), with an average unit load of 308.2 klb/hr steam flow.

Testing was conducted on Unit #1 and #2 in order to demonstrate compliance with the facility's current ROP (MI-ROP-N1685-2008a) for emissions of PM and TGNMO. The PM emission limits are specified in Conditions I.1 and I.2 of Table FGBOILERS. The TGNMO emission limits are specified in Condition I.14 of Table FGBOILERS. The permitted limits for these pollutants are summarized below in Table 1.

Table 1 – Summary of PM and TGNMO Emission Limits for EUBOILER01 and EUBOILER02

Pollutant	Limit
PM	0.03 pounds per million BTU heat input (lb/mmBtu).
PM	11.5 lb/hour per boiler
Total non-Methane Hydrocarbons	4.6 lb/hour per boiler

As shown in Tables 2 and 3 below, the particulate emission rates each for each individual run and the average of the three runs were below the emission limits of 0.03 lb/mmBtu and 11.5 lb/hr for both Units #1 and #2. Thus, Units #1 and #2 are in compliance with the ROP Particulate Matter emission limit.

Also shown in Tables 2 and 3 below, the TGNMO emission rates for each individual run and the average of the three runs were below the emission limit of 4.6 lb/hr for both Units #1 and #2. Thus, Units #1 and #2 are in compliance with the ROP Total non-Methane Hydrocarbons emission limit.

TESFiler0001169

Table 2 – Summary of Unit #1 PM and TGNMO Test Results

Run Number	Gas Volume (acfm)	Outlet Grain Loading (gr/dscf)	Particulate Concentration (lb/mmBtu)	Particulate Concentration (lb/hr)	Total non-Methane Hydrocarbons [1] (TGNMO) (lb/hr, as carbon)
Run 1	131,492	0.0006	0.0011	0.4526	1.07
Run 2	128,812	0.0011	0.0020	0.8187	0.33
Run 3	131,694	0.0007	0.0013	0.4791	0.28
Average	130,666	0.0007	0.0015	0.5834	0.56

Table 3 – Summary of Unit #2 PM and TGNMO Test Results

Run Number	Gas Volume (acfm)	Outlet Grain Loading (gr/dscf)	Particulate Concentration (lb/mmBtu)	Particulate Concentration (lb/hr)	Total non-Methane Hydrocarbons [1] (TGNMO) (lb/hr, as carbon)
Run 1	139,090	0.0034	0.0070	2.8088	0.48
Run 2	137,855	0.0003	0.0006	0.2407	0.11
Run 3	138,365	0.0003	0.0007	0.2765	0.00
Average	138,436	0.0013	0.0028	1.1086	0.19

[1] At MDEQ Request, the TGNMO concentrations used for calculating the TGNMO emission rates have been drift corrected, per Method 7E. The data was initially presented without drift correction following Method 25A specifications. Please note that the Unit 2, Run 3 drift corrected concentration resulted in a negative value. Per MDEQ guidance obtained specifically about this issue, any drift corrected concentration resulting in negative values are to be adjusted to 0.00 ppm. Therefore, the Unit 2, Run 3 drift corrected TGNMO value of -0.18 ppm was adjusted to 0.00 ppm.

TESFiler0001170

SOURCE DESCRIPTION

Filer City Generating Station (SRN N1685; ORIS Code 50835) operates a cogeneration power plant consisting of two (2) Foster Wheeler stoker boilers with a combined rated output of 60-megawatts (MW) and 50,000 pounds of steam per hour. The two boilers share a common steam electric turbine, and the process steam is supplied to a nearby paper mill.

Each unit is designed to combust coal, tire-derived fuel (TDF), wood bark and/or petroleum coke. Although the ROP allows the firing of construction/demolition waste, such materials are not routinely fired in the boilers and were not fired during the stack tests. Each boiler has a nominal heat input rating of approximately 384 mmBtu/hr, and is equipped with a dry SO_2 scrubber and a pulse jet baghouse. Emissions from each boiler are emitted through dedicated stack flues contained in a common stack.

TESFiler0001171

SAMPLING AND ANALYTICAL PROCEDURES

PARTICULATE MATTER (PM) EMISSION TESTS

Cyclonic flow tests were conducted on both the Unit #1 and #2 stacks on September 20, 2012 (prior to commencement of PM sampling runs) to meet the requirements of Method 1. The average null yaw angle for Unit #1 was 3° (Attachment 2). The average null yaw angle for Unit #2 was 8° (Attachment 7). Therefore, the cyclonic flow measured in both stacks was within the tolerance specified in Method 1 (i.e., less than 20°).

The particulate matter sampling procedure, as outlined in Reference Method 17 of 40 CFR 60, Appendix A, was followed throughout the test. In addition, equations contained in Method 5B of Michigan Rule 336.2011 were also utilized to determine the amount of excess air and correct the particulate matter concentration to 50% excess air.

Testing was conducted with each respective unit operating as close to full load as possible. Unit #1 was tested at an average unit load of 308.1 klb/hr steam flow. Unit #2 was tested at an average unit load of 308.2 klb/hr steam flow. Soot blowing and ash removal occurred as normal during the testing. Fuel samples were taken during the test, as required. Fuel analysis data is presented in Attachment 12.

Plant operating data collected during the test periods included gross load (steam flow klb/hr) and percent stack opacity. The plant operating data for unit #1 is presented in Attachment 6. The plant operating data for unit #2 is presented in Attachment 11. The proximate analysis results for the fuel fired during the test are presented in Attachment 12.

Three runs were performed, which constitutes a complete test. Each run included 120 minutes of sampling, which represents 10 minutes of sampling at each of the 12 sampling points. This resulted in sample volumes greater than 30 DSCF for all test runs performed.

The cross-section at the sampling site was divided into equal areas as per Method 1 (Figures 3a and 3b). The particulate material was collected isokinetically from the gas stream and the weight determined on a dry basis. The isokinetic variation on the tests performed is shown on the summary sheet in the "Test Results and Discussion" section. The allowable range according to Method 17 is 100% ± 10%.

A flow diagram of the sampling train is attached with the report (Figure 2a). A sample nozzle was connected to the primary filter housing, followed by a secondary filter. This assembly was connected to a probe extension (Figure 2b). The gas sample was drawn through the filter assembly and probe, into a moisture trap, and then into the leak-free Method 17 test module.

A calibrated type "S" Pitot tube was attached to the probe to measure the stack gas velocity. Stack gas temperature measurements were made with a thermocouple wire attached to the Pitot tube, and read on a digital indicator.

TESFiler0001172

Moisture was determined using Reference Method 4, 40 CFR Part 60, Appendix A. Analysis of the flue gas was performed by Reference Method 3A, 40 CFR Part 60, Appendix A. A Servomex O_2/CO_2 analyzer was used.

TOTAL GASEOUS NON-METHANE ORGANICS (TGNMO) EMISSION TEST

Total Gaseous Non-Methane Organic compounds (TGNMO) concentrations were determined using a Thermo Model 55i direct methane, non-methane hydrocarbon analyzer following the guidelines of U.S. EPA Reference Method 25A, *Determination of Total Gaseous Organic Concentration Using a Flame Ionization Analyzer (FIA)*. Flue gas is conveyed through a particulate filter, heated probe, heated sample line (HSL), secondary particulate filter and sample pump prior to entering the instrument. A known volume of flue gas is then collected into a sample loop and transported to an eight port valve in the detector oven and injected into a flowing carrier gas to the separation column. Methane, emerging first from the column due to its low molecular weight and high volatility, is carried back to the detector oven to be measured by a Flame Ionization Analyzer (FIA). The eight port valve then returns to the original position resulting in the back-flush of the non-methane hydrocarbons to the FIA. Simultaneously, the next volume of sample is collected into the sample loop.

Prior to the test, the Model 55i analyzer was calibrated with four gases including a zero (purified air), low range (approximately 25 to 35 percent of instrument span), mid-range (approximately 45 to 55 percent of instrument span), and high range (approximately 80 to 90 percent of instrument span) using a mixture of propane and methane in air. Thereafter, the instrument was calibrated and operated to ensure specific method requirements for calibration error, response time and drift determinations were met.

Each of the three (3) TGNMO test runs were conducted concurrently with the PM test runs on each respective unit. Flue gas flow rate data measured during each PM test run was correlated with the applicable TGNMO concentrations to calculate TGNMO emission rates in lb/hr, as specified in the ROP. The results of the test have been presented as carbon and as propane.

TESFiler0001173

TEST RESULTS AND DISCUSSION

Unit #1

Each of the three test runs, along with the average, was below the particulate matter emission limits and the TGNMO limit for Unit #1. Thus, Unit #1 is in compliance with the ROP particulate matter and TGNMO emission limits. Refer to the pages at the end of this section for a detailed tabulation of results, including process operating conditions and flue gas conditions.

There were no process or control equipment upset conditions which occurred during the testing, and no major maintenance was performed on the baghouse during the three month period prior to testing.

Sample calculations for all formulas used in the test report are contained in Attachment 1. All calculation sheets, field data sheets, and calibration sheets are included as Attachments 3, 4, 5 and 13, respectively. The unit operating data for each test run can be found in Attachment 6.

Unit #2

Each of the three test runs, along with the average, was below the particulate matter emission limits and the TGNMO limit for Unit #2. Thus, Unit #2 is in compliance with the ROP particulate matter emission TGNMO limits. Refer to the pages at the end of this section for a detailed tabulation of results, including process operating conditions and flue gas conditions.

There were no process or control equipment upset conditions which occurred during the testing, and no major maintenance was performed on the baghouse during the three month period prior to testing, except as noted above.

Sample calculations for all formulas used in the test report are contained in Attachment 1. All calculation sheets, field data sheets, and calibration sheets are included as Attachments 8, 9, 10 and 13, respectively. The unit operating data for each test run can be found in Attachment 11.

TESFiler0001174

T E S FILER CITY UNITS 1 & 2

PARTICULATE EMISSION TEST

SUMMARY TABLE

Date	Unit	Steam Flow (klb/hr)	Gas Volume (acfm)	Outlet Grain Loading (gr/dscf)	Particulate Concentration (lb/mm btu)	Particulate Concentration lb/hr	lb/1000 lbs Gas Flow *	Average Stack Opacity (%)	Flue Gas Temp (°F)	Flue Gas Velocity (fps)	Excess Air (%)	Flue Gas Moisture (%)	Isokinetic Variation (%)
8/21/2012	1	306.3	131,492	0.0006	0.0011	0.4526	0.0009	2.69	175.4	69.6	36.8	13.5	97.6
8/21/2012	1	308.3	128,812	0.0011	0.0020	0.8187	0.0016	2.46	175.0	68.1	36.7	13.5	98.9
8/21/2012	1	309.7	131,694	0.0006	0.0013	0.4791	0.0010	2.50	174.9	69.7	52.5	15.1	99.9
Average		308.1	130,666	0.0007	0.0015	0.5834	0.0012	2.55	175.1	69.1	42.0	14.0	98.8
8/22/2012	2	309.3	139,090	0.0034	0.0070	2.8088	0.0055	0.77	177.7	73.6	47.7	13.3	98.3
8/22/2012	2	307.0	137,855	0.0003	0.0006	0.2407	0.0005	0.69	178.6	72.9	52.4	13.9	99.4
8/22/2012	2	308.3	138,365	0.0003	0.0007	0.2765	0.0005	0.74	177.1	73.2	48.1	14.1	99.9
Average		308.2	138,436	0.0013	0.0028	1.1086	0.0022	0.73	177.8	73.2	49.4	13.8	99.2

* Emissions in pounds of particulate per 1000 pounds gas flow corrected to 50 % excess air.

Notes:
1. The particulate emission limits for Units 1 and 2 are 0.03 lb/mmbtu and 11.5 lb/hr.
2. Oxygen and carbon dioxide are measured at the point of particulate sampling.
3. Flue gas moisture is determined by the condensate method.
4. Flue gas temperature is the average temperature at the point of particulate sampling.

FUEL ANALYSIS
(on dry basis)

Date	Unit	% Moisture	% Ash	% Sulfur	Btu
8/21/2012	1	14.41	7.17	2.08	13,369
8/21/2012	1	15.18	7.08	2.03	13,233
8/21/2012	1	15.95	7.00	1.97	13,097
8/22/2012	2	15.31	7.47	1.90	13,317
8/22/2012	2	16.20	7.36	1.84	13,156
8/22/2012	2	16.96	7.27	1.79	13,018

TGNMOC Calculation Sheet
TES FILER CITY
Unit 1 Exhaust

Sampling Data	Test 1	Test 2	Test 3	Average
Client:		TES Filer City		
Source:		Unit 1 Outlet		
Date:	8/21/2012	8/21/2012	8/21/2012	
Test No:	#1	#2	#3	Average
Pitot Tube Calibration Factor:	0.832	0.832	0.832	0.832
Meter Calibration Factor:	1.00	1.00	1.00	1.00
Stack Diameter, inches:	76	76	76	76.00
Nozzle Diameter, inches:	0.1875	0.1875	0.1875	0.1875
Barometric Pressure, inches mercury:	29.21	29.21	29.21	29.21
Static Pressure in Stack, inches water:	-0.80	-0.80	-0.80	-0.80
Duration of Sample, minutes:	120	120	120	120
Meter Leak Rate, cfm:	0.007	0.002	0.004	0.004
Meter Start Volume, cf:	276.846	346.776	415.153	346.258
Meter Final Volume, cf :	344.715	413.448	482.626	413.596
Average Meter Pressure, inches water:	3.88	3.73	3.84	3.82
Average Meter Temperature, degrees F:	86.75	80.8	79.7	82.39
Average Sqrt. Velocity Pressure, inches water :	1.1221	1.1003	1.1191	1.1138
Stack Gas Temperature, degrees F:	175.42	175.00	174.92	175.11
Percent Carbon Dioxide:	13.33	13.64	12.41	13.13
Percent Oxygen:	5.69	5.60	7.15	6.15
Percent Carbon Monoxide:	0	0	0	0.00
Liquid Volume Collected, milliliters:	196	196	232	208.00
Liquid Volume Collected, grams:	18.05	17.45	13.00	16.17

Sample Calculations	Test 1	Test 2	Test 3	Average
Meter Volume, Actual, cf:	67.869	66.672	67.473	67.338
Meter Volume, STP (68 deg. F, 29.92 in. Hg), dscf:	64.585	64.127	65.044	64.585
Meter Volume, STP (68 deg. F, 29.92 in. Hg), dscm:	1.829	1.816	1.842	1.829
Vol. of H2O Collected, STP (68 deg. F, 29.92 in. Hg):	10.075	10.047	11.531	10.551
Total Gas Sampled, cf:	74.660	74.173	76.575	75.136
Percent Moisture:	13.494	13.54	15.06	14.032
Dry Molecular Weight, lb/lb-Mole:	30.360	30.406	30.272	30.346
Molecular Weight, at Stack Condition, lb/lb-Mole:	28.6925	28.7254	28.4240	28.614
Density Dry at STP (68 deg. F, 29.92 in. Hg), lb/cf:	0.0785	0.0786	0.0783	0.078
Density Wet at STP (68 deg. F, 29.92 in. Hg), lb/cf:	0.0742	0.0743	0.0735	0.074
Density Wet at Stack Cond, lb/cf:	0.0601	0.0602	0.0595	0.060
Area of Stack, Square Feet:	31.5030	31.5030	31.5030	
Pounds of Gas Sampled, Dry:	5.0694	5.0409	5.0905	5.067
Pounds of Gas Sampled, Wet:	5.5379	5.5081	5.6267	5.558
Isokinetic Sampling Rate, (%):	96.08	97.37	98.30	97.249
Excess Air at Test Location, (%):	36.27	35.61	50.79	40.89

Velocity and Flow Data	Test 1	Test 2	Test 3	Average
Average Stack Gas Velocity, ft/s:	69.6	68.2	69.7	69.1
Stack Gas Flow Rate, ACFM:	131,490	128,820	131,705	130,672
Stack Gas Flow Rate, SCFM:	106,411	104,319	106,669	105,800
Stack Gas Flow Rate, DSCFM:	92,052	90,190	90,607	90,949

TGNMOC Data	Test 1	Test 2	Test 3	Average
TGNMOC Concentration, ppmv as propane [1]:	1.80	0.56	0.46	0.94
TGNMOC Emission Rate, lb/hr, as propane:	1.31	0.40	0.34	0.68
TGNMOC Concentration, ppmv as carbon:	5.40	1.68	1.39	2.82
TGNMOC Emission Rate, lb/hr, as carbon:	1.07	0.33	0.28	0.56
TGNMOC Permit Limit, lb/hr:	4.6	4.6	4.6	

[1]At MDEQ request, the TGNMOC concentrations shown are drift corrected following Method 7E requirements.
Method 25A specifies the use of uncorrected concentrations.

TGNMOC Calculation Sheet
TES FILER CITY
Unit 2 Exhaust

Sampling Data	Test 1	Test 2	Test 3	Average
Client:		TES Filer City		
Source:		Unit 2 Outlet		
Date:	8/22/2012	8/22/2012	8/22/2012	
Pitot Tube Calibration Factor:	0.832	0.832	0.832	0.832
Meter Calibration Factor:	1.00	1.00	1.00	1.00
Stack Diameter, inches:	76.00	76.00	76.00	76.00
Nozzle Diameter, inches:	0.1875	0.1875	0.1875	0.1875
Barometric Pressure, inches mercury:	29.27	29.27	29.27	29.27
Static Pressure in Stack, inches water:	0.50	0.50	0.50	0.50
Duration of Sample, minutes:	120	120	120	120
Meter Leak Rate, cfm:	0.006	0.006	0.002	0.005
Meter Start Volume, cf:	483.723	556.947	629.419	556.696
Meter Final Volume, cf :	555.948	628.419	701.157	628.508
Average Meter Pressure, inches water:	4.30	4.22	4.27	4.26
Average Meter Temperature, degrees F:	85.8	82.8	81.1	83.22
Average Sqrt. Velocity Pressure, inches water :	1.1870	1.1741	1.1794	1.1802
Stack Gas Temperature, degrees F:	177.67	178.58	177.08	177.78
Percent Carbon Dioxide:	12.53	12.35	12.57	12.48
Percent Oxygen:	6.80	7.15	6.77	6.91
Percent Carbon Monoxide:	0	0	0	0.00
Liquid Volume Collected, milliliters:	208	218	226	217.33
Liquid Volume Collected, grams:	17.25	16.75	16.1	16.70

Sample Calculations	Test 1	Test 2	Test 3	Average
Meter Volume, Actual, cf:	72.225	71.472	71.738	71.812
Meter Volume, STP (68 deg. F, 29.92 in. Hg), dscf:	69.069	68.703	69.189	68.987
Meter Volume, STP (68 deg. F, 29.92 in. Hg), dscm:	1.956	1.946	1.959	1.954
Vol. of H2O Collected, STP (68 deg. F, 29.92 in. Hg):	10.603	11.050	11.396	11.016
Total Gas Sampled, cf:	79.672	79.752	80.585	80.003
Percent Moisture:	13.31	13.85	14.14	13.768
Dry Molecular Weight, lb/lb-Mole:	30.276	30.263	30.282	30.274
Molecular Weight, at Stack Condition, lb/lb-Mole:	28.6424	28.5636	28.5456	28.584
Density Dry at STP (68 deg. F, 29.92 in. Hg), lb/cf:	0.0783	0.0782	0.0783	0.078
Density Wet at STP (68 deg. F, 29.92 in. Hg), lb/cf:	0.0740	0.0738	0.0738	0.074
Density Wet at Stack Cond, lb/cf:	0.0601	0.0598	0.0599	0.060
Area of Stack, Square Feet:	31.5030	31.5030	31.5030	
Pounds of Gas Sampled, Dry:	5.4063	5.3752	5.4168	5.399
Pounds of Gas Sampled, Wet:	5.8993	5.8890	5.9467	5.912
Isokinetic Sampling Rate, (%):	96.75	97.85	98.28	97.624
Excess Air at Test Location, (%):	46.90	50.71	46.61	48.07

Velocity and Flow Data	Test 1	Test 2	Test 3	Average
Average Stack Gas Velocity, ft/s:	73.6	72.9	73.2	73
Stack Gas Flow Rate, ACFM:	139,096	137,867	138,376	138,446
Stack Gas Flow Rate, SCFM:	112,768	111,611	112,287	112,222
Stack Gas Flow Rate, DSCFM:	97,761	96,148	96,408	96,772

TGNMOC Data	Test 1	Test 2	Test 3	Average
TGNMOC Concentration, ppmv as propane[1]:	1.03	0.23	0.00	0.42
TGNMOC Emission Rate, lb/hr, as propane:	0.58	0.13	0.00	0.24
TGNMOC Concentration, ppmv as carbon:	3.09	0.70	0.00	1.26
TGNMOC Emission Rate, lb/hr, as carbon:	0.48	0.11	0.00	0.19
TGNMOC Permit Limit, lb/hr:	4.6	4.6	4.6	

[1]At MDEQ request, the TGNMOC concentrations shown are drift corrected following Method 7E requirements. Method 25A specifies the use of uncorrected concentrations. Furthermore, the Unit 2, Test 3 drift corrections resulted in a TGNMOC concentration less than zero. Per MDEQ guidance, any drift corrected concentrations resulting in negative values are to be adjusted to 0.00 ppm. Therefore, the drift corrected TGNMOC Test 3 value of -0.18 ppm was adjusted to 0.00.

Figure 1

TES FILER CITY UNIT 1 & 2 TEST PORT ELEVATION

IN-STACK TEST PORT LOCATION

(elevation looking east)

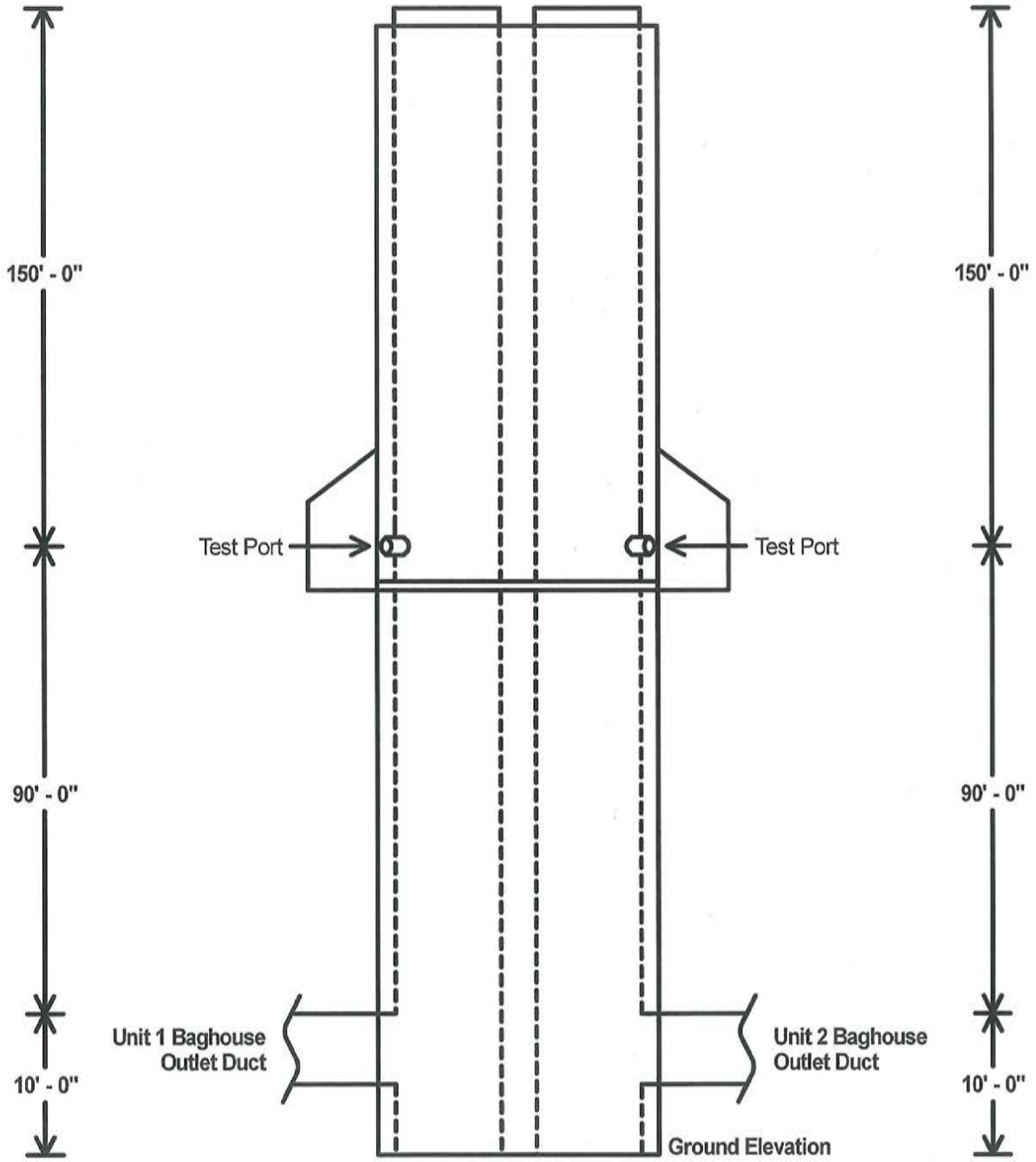

METHOD 17 SAMPLE TRAIN FLOW DIAGRAM

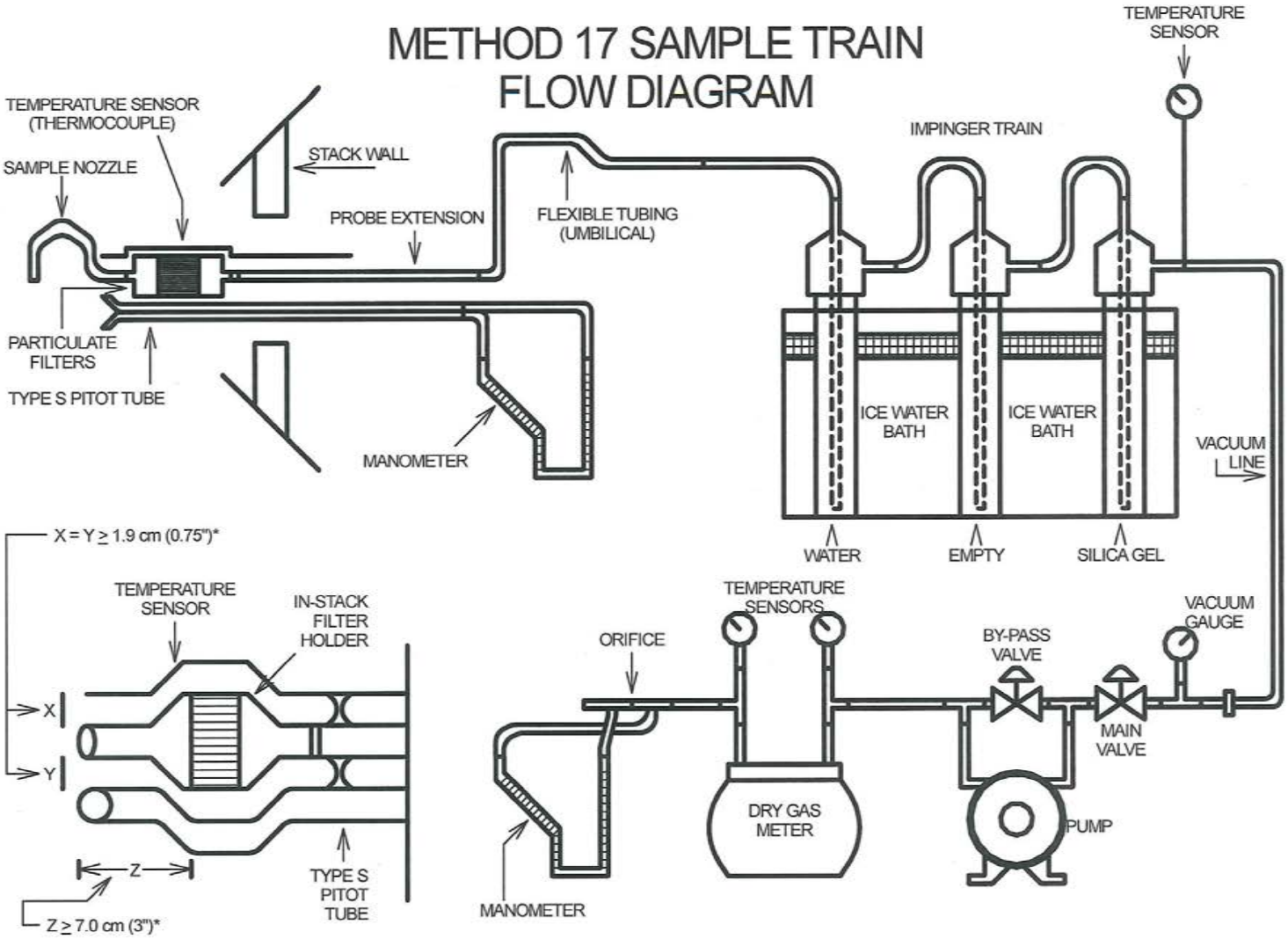

*SUGGESTED (INTERFERENCE FREE) SPACINGS

BCP 12/18/08

Figure 2a

Figure 2b

IN-LINE FIBERGLASS PARTICULATE FILTER HOLDERS AS USED AT T.E.S. FILER CITY PLANT UNITS 1 & 2

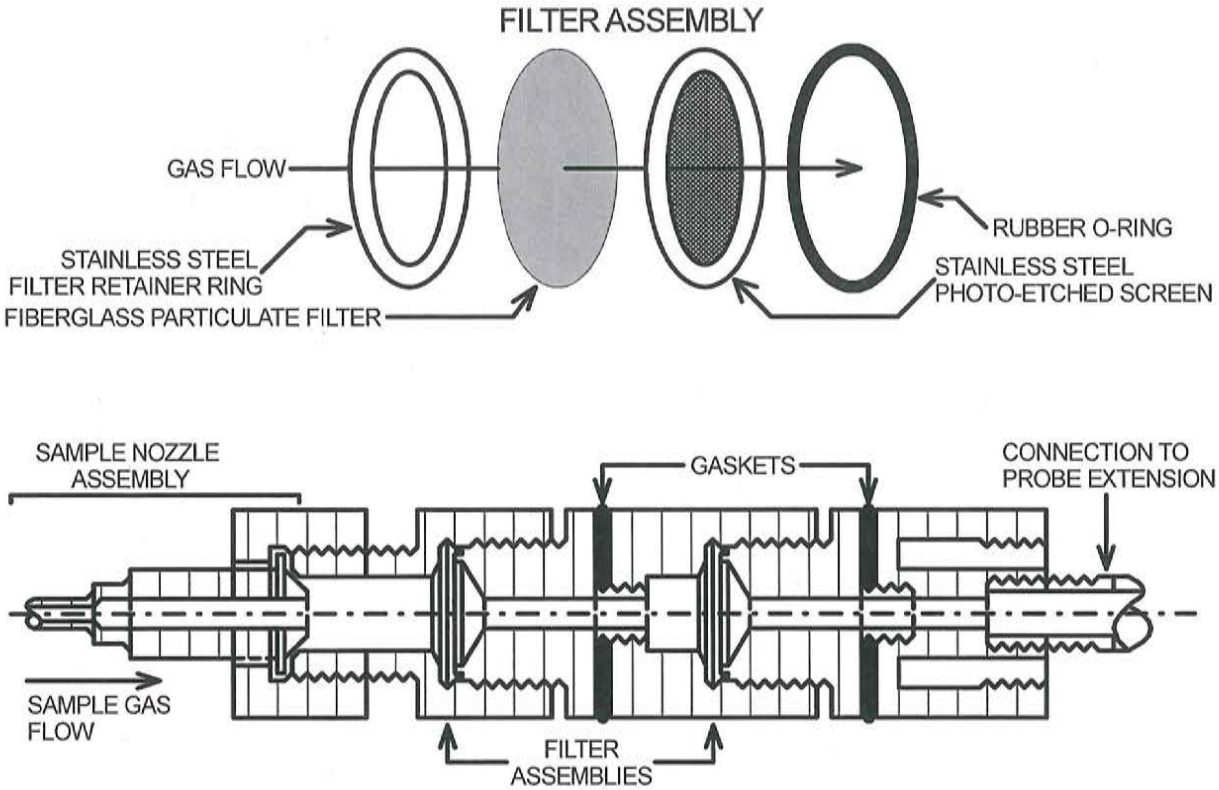

BCP 9/20/12

Figure 3a

TES FILER CITY UNIT 1 PARTICULATE EMISSION TEST

IN-STACK TEST PORTS AND EQUAL-AREA TRAVERSE POINT DETAIL

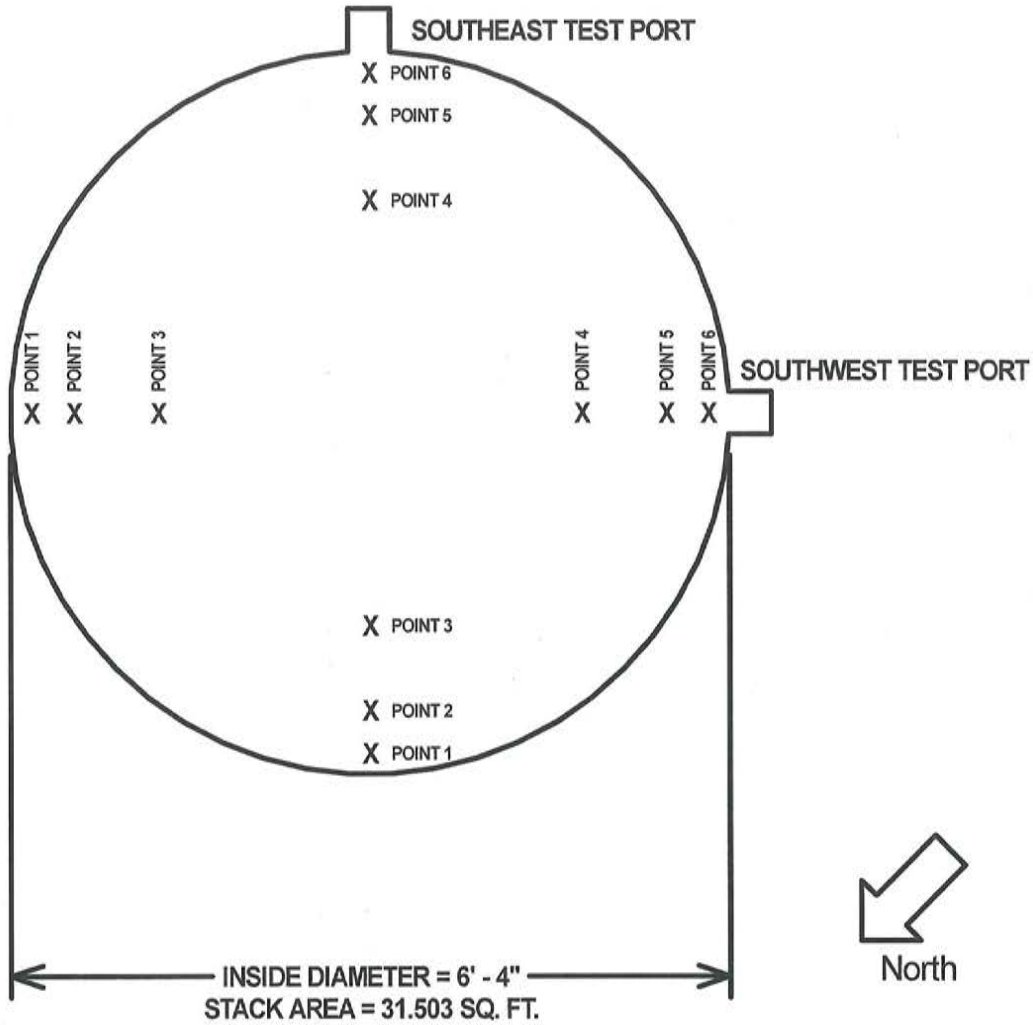

PET Sample Probe Depths
From Inside Stack Wall

Flow Port Length = 20"

Point 1 = 72.656"
Point 2 = 64.904"
Point 3 = 53.504"
Point 4 = 22.496"
Point 5 = 11.096"
Point 6 = 3.344"

Figure 3b

TES FILER CITY UNIT 2 PARTICULATE EMISSION TEST

IN-STACK TEST PORTS AND EQUAL-AREA TRAVERSE POINT DETAIL

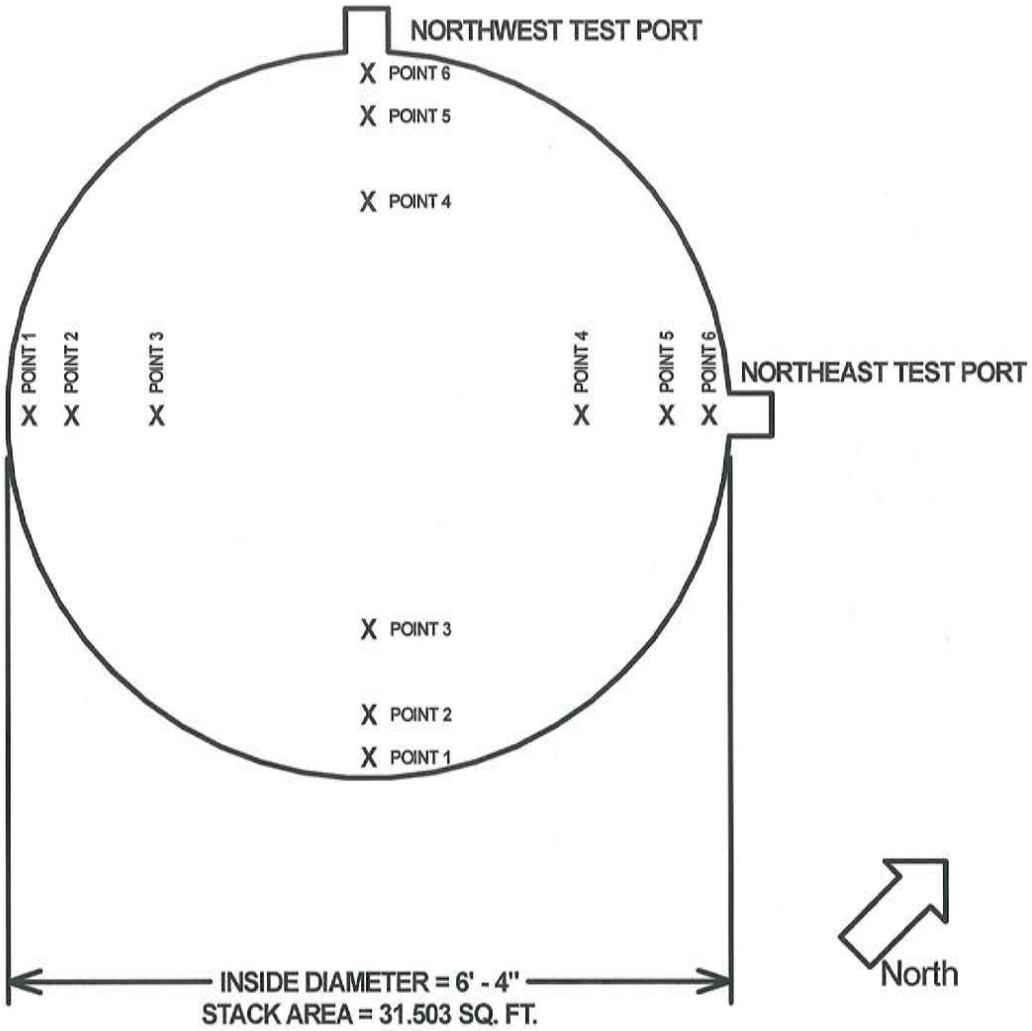

PET Sample Probe Depths
From Inside Stack Wall
Flow Port Length = 20"

Point 1 = 72.656"
Point 2 = 64.904"
Point 3 = 53.504"
Point 4 = 22.496"
Point 5 = 11.096"
Point 6 = 3.344"

Attachment 1
Formulas Used to Calculate Results

Calculations

Volume of water vapor in the gas sample, corrected to standard conditions (SCF)

$V_{w(std)} = 0.04707 \times V_1$

V_1 = Volume of condensate collected in impingers and silica gel

Proportion of water vapor, by volume, in the gas stream

$B_{ws} = V_{w(std)}/(V_{m(std)} + V_{w(std)})$

Molecular Weight

$M_d = (0.28 \times \%N_2) + (0.32 \times \%O_2) + (0.44 \times \%CO_2)$

$M_s = M_d(1-B_{ws}) + 18 \times B_{ws}$
$\%N_2 = 100 - \%O_2 - \%CO_2$

Absolute stack gas pressure, In. Hg

$P_{sa} = P_b + (P_s/13.6)$

P_b = Barometric Pressure, In. Hg
P_s = Stack Static Pressure, In. H_2O

Average Gas Velocity in Flue, ft/sec.

$V_s = K_p \times C_p \times (\Delta P^{1/2})_{ave} \times [T_s/(M_s \times P_{sa})]^{1/2}$

K_p = Pitot tube constant (85.49 for English)
C_p = Pitot tube coefficient
ΔP = Velocity head of stack gas, In. H_2O
T_s = Absolute average stack gas temperature, °R

Gas Volume in Flue, ACFM

$Q_s = V_s \times A \times 60$

A = Cross sectional area of traverse area, $ft.^2$

Gas Volume in Flue, corrected to standard conditions, dscfm

$Q_{sd} = Q_s \times (1-B_{ws}) \times (P_{sa}/T_s) \times 17.647$

Total Volume Sampled, corrected to standard conditions, dscf

$V_{m(std)} = 17.64 \times V_m \times Y[P_b + (\Delta H/13.6)/T_m]$

ΔH = Average pressure differential across the orifice meter, In. H2O
P_b = Barometric Pressure, In. Hg.
T_m = Absolute average dry gas meter temperature, °R
V_m = Volume of gas sample, measured by dry gas meter, dcf
Y = Dry gas meter calibration coefficient

Percent Excess Air

$EA = (100 \times \%O_2) / (0.264 \times \%N_2) - \% O_2$

Particulate Concentrations

Grams/dscf = $DUSTWT/V_{m(std)}$
Grains/dscf = grams/dscf x 15.43
Lb/hr = grams/dscf x Q_{sd} x $2.205E^{-3}$ x 60
Lb/1000lb gas flow = lb/hr/[(60 x Q_s x lb/ft^3)/1000]

DUSTWT = particulate collected (grams)
Lb/ft^3 = P_{sa} x 13.6 x 5.202688/(1545/M_s x T_s)
1545 = Universal Gas Constant
5.202688 = 144 in^2 per ft^2/27.678 in H_2O per PSI

Emission Rates
Pounds per thousand pounds gas flow @ 50% excess air

Lb/1000 lb gas flow @ 50% excess air = lb/1000 lb gas flow x [(100 + EA)/150]

Pounds per million BTU

Lb/mmBTU = (grams/dscf x $2.205E^{-3}$) x F_c(100/%CO_2)

$2.205E^{-3}$ = pounds per gram
F_c = 1840

% Isokinetic

$I = 0.09450 \times T_s \times V_{m(std)}/P_s \times V_s \times A_n \times \Theta \times (1 - B_{ws})$

Θ = Total sample time, minutes
A_n = Nozzle area, $ft.^2$

Dry Gas Meter Coefficient

$Y = (V_s/V_{dgm})[(T_{dgm} + 460)/(T_s + 460)][P_{bar} /(P_{bar} + \Delta P/13.6)]$

V_s = Gas volume, calibration standard meter, SCFM
V_{dgm} = Gas volume, dry gas meter, SCFM
T_{dgm} = Temperature, dry gas meter, °F
T_s = Temperature, calibration standard meter, °F
P_{bar} = Barometric Pressure, In. Hg
ΔP = Dry gas meter inlet differential pressure, In H_2O

Unit 1
TGNMOC Example Calculations
TES Filer City

Sampling Data	Test 1
Client:	TES Filer City
Source:	Unit 1 Outlet
Date:	8/21/2012
Pitot Tube Calibration Factor:	0.832
Meter Calibration Factor:	1
Stack Diameter, inches:	75.9998
Barometric Pressure, inches mercury:	29.21
Static Pressure in Stack, inches water:	-0.8
Duration of Sample, minutes:	120
Meter Leak Rate, cfm:	0.007
Meter Start Volume, cf:	276.846
Meter Final Volume, cf :	344.715
Average Meter Pressure, inches water:	3.88
Average Meter Temperature, degrees F:	86.75
Average Sqrt. Velocity Pressure, inches water :	1.1221
Stack Gas Temperature, degrees F:	175.42
Percent Carbon Dioxide:	13.33
Percent Oxygen:	5.75
Percent Carbon Monoxide:	0
Liquid Volume Collected, milliliters:	196
Liquid Volume Collected, grams:	18.05
Sample Calculations	Test 1
Meter Volume, Actual, cf:	=B18-B17
Meter Volume, STP (68 deg. F, 29.92 in. Hg), dscf:	=17.64*B8*B30*((B13+(B19/13.6))/(B20+460))
Meter Volume, STP (68 deg. F, 29.92 in. Hg), dscm:	=0.02832*B31
Vol. of H2O Collected, STP (68 deg. F, 29.92 in. Hg):	=(0.04706*B26)+(0.04715*B27)
Total Gas Sampled, cf:	=B31+B33
Percent Moisture:	=(B33/(B31+B33))*100
Dry Molecular Weight, lb/lb-Mole:	=(0.44*B23)+(0.32*B24)+(0.28*(100-B23-B24-B25))
Molecular Weight, at Stack Condition, lb/lb-Mole:	=(B36*(1-(B35/100)))+(18*(B35/100))
Density Dry at STP (68 deg. F, 29.92 in. Hg), lb/cf:	=((0.0827*B24)+(0.1137*B23)+(0.0724*(100-B24-B23)))/100
Density Wet at STP (68 deg. F, 29.92 in. Hg), lb/cf:	=(B38*(1-(B35/100))+(0.0465*(B35/100)))
Density Wet at Stack Cond, lb/cf:	=((528/(B22+460))*((B13+(B14/13.6))/29.92)*B39)
Area of Stack, Square Feet:	=IF(B9>0,((B9*B10)/144),(PI()*((B11/2)^2)/144))
Pounds of Gas Sampled, Dry:	=B38*B31
Pounds of Gas Sampled, Wet:	=B34*B39
Isokinetic Sampling Rate, (%):	=0.0945*(((B22+460)*B31)/((B13+(B14/13.6))*B48*(PI()*((B12/2)^2)/144)*B15*(1-(B35/100))))
Excess Air at Test Location, (%):	=((B24-(0.5*B25))/(0.264*(100-B24-B25-B23)-(B24-(0.5*B25))))*100
Velocity and Flow Data	Test 1
Average Stack Gas Velocity, ft/s:	=85.49*B7*B21*SQRT((B22+460)/((B13+(B14/13.6))*B37))
Stack Gas Flow Rate, ACFM:	=60*B48*B41
Stack Gas Flow Rate, SCFM:	=B49*17.64*((B13+(B14/13.6))/(B22+460))
Stack Gas Flow Rate, DSCFM:	=B50*(1-(B35/100))
TGNMOC Data	Test 1
TGNMOC Concentration, ppmv as propane [1]:	1.80
TGNMOC Emission Rate, lb/hr, as propane:	=B$50*44.096*B65*0.0000001557
TGNMOC Concentration, ppmv as carbon:	=B65*3
TGNMOC Emission Rate, lb/hr, as carbon:	=B$50*12.01*B68*0.0000001557
TGNMOC Permit Limit, lb/hr:	4.6

Example TGNMOC Drift Calculations
TES FILER CITY
UNIT 1

	A	F
5		
6	**Run 1**	TGNMOC
7	Measurement Parameter:	Propane
8	Instrument Span, ppm:	50
9	Upscale Gas Cylinder Value, ppm:	15.1
10	Initial Zero Gas Value, ppm:	0.04
11	Initial Upscale Gas Value, ppm :	15.2
12	**Run Average, ppm:**	**1.94**
13	Final Zero Gas Value, ppm:	0.25
14	Final Upscale Gas Value, ppm:	14.81
15	Zero Drift, percent of span:	=ABS(F13-'cal-error'!E18)/F8
17	Upscale Drift, percent of span:	=ABS(F14-'cal-error'!E19)/F8
19	**Drift Corrected Value, ppm:**	**=F12-AVERAGE(F10,F13)*F9/(AVERAGE(F11,F14)-AVERAGE(F10,F13))**
20		
21	**Run 2**	TGNMOC
22	Measurement Parameter:	Propane
23	Instrument Span, ppm:	=F8
24	Upscale Gas Cylinder Value, ppm:	15.1
25	Initial Zero Gas Value, ppm:	0.25
26	Initial Upscale Gas Value, ppm :	14.81
27	**Run Average, ppm:**	**0.78**
28	Final Zero Gas Value, ppm:	0.18
29	Final Upscale Gas Value, ppm:	14.71
30	Zero Drift, percent of span:	=ABS(F28-'cal-error'!E18)/F23
32	Upscale Drift, percent of span:	=ABS(F29-'cal-error'!E19)/F23
34	**Drift Corrected Value, ppm:**	**=F27-AVERAGE(F25,F28)*F24/(AVERAGE(F26,F29)-AVERAGE(F25,F28))**
35		
36	**Run 3**	TGNMOC
37	Measurement Parameter:	Propane
38	Instrument Span, ppm:	=F23
39	Upscale Gas Cylinder Value, ppm:	15.1
40	Initial Zero Gas Value, ppm:	0.18
41	Initial Upscale Gas Value, ppm :	14.71
42	**Run Average, ppm:**	**0.55**
43	Final Zero Gas Value, ppm:	-0.01
44	Final Upscale Gas Value, ppm:	14.6
45	Zero Drift, percent of span:	=ABS(F43-'cal-error'!E18)/F$38
47	Upscale Drift, percent of span:	=ABS(F44-'cal-error'!E19)/F38
49	**Drift Corrected Value, ppm:**	**=F42-AVERAGE(F40,F43)*F39/(AVERAGE(F41,F44)-AVERAGE(F40,F43))**
50		

	A	B	C	D	E	F	G
1							
2	**TGNMOC ANALYZER CALIBRATION ERROR DATA**						
3							
4	Test Date:	8/21/2012				Analyzer:	Thermo 55I
5	Client:	TES Filer City				Span, ppm:	50
6	Source:	Unit 1				Sample Location:	Outlet
7							
8	Calibration	Calibration	Cylinder	Cylinder	Analyzer	Absolute	Difference
9	Gas	Gas	Number	Value	Response	Difference	(% of Span)
10	Scale	Blend		ppm	ppm	percent	
11	Zero	Zero Air	CC7759	0.00	0.01	0.01	0.02
12	Low	Methane/Air	ALM051223	15.20	15.20	0.00	0.00
13	Mid	Methane/Air	ALM042283	28.10	28.10	0.00	0.00
14	High	Methane/Air	ALM018168	45.20	45.20	0.00	0.00
18	Zero	Zero Air	CC7759	0.00	0.04	0.04	0.08
19	Low	Propane/Air	ALM051223	15.10	15.10	0.00	0.00
20	Mid	Propane/Air	ALM042283	27.30	27.30	0.00	0.00
21	High	Propane/Air	ALM018168	45.20	44.98	0.22	0.44
22							
23	Prior to testing, the Thermo 55I is programmed with specific response factors						
24	following Method 25A specifications. During initial calibrations, these						
25	response factors are not applied; however upon completion of the calibration,						
26	the applicable non-methane response factor is applied to all subsequent instrument data.						

Attachment 2
Unit #1 Verification of Absence of Cyclonic Flow

T E S Filer City Unit 1

Particulate Emission Test

Cyclonic Flow Test

Date 8/20/2012

Traverse Point	Null Yaw Angle
1-A	3
1-B	2
1-C	2
1-D	2
1-E	3
1-F	0
2-A	5
2-B	3
2-C	1
2-D	2
2-E	4
2-F	12

Average Null Yaw Angle = 3

Cyclonic Flow is within tolerance. This sample location is allowed.

Attachment 3
Unit #1 PM Test Calculation Sheets

							MRC
PLANT	T E S Filer City		DATE	8/21/12			12.666
UNIT	1		Y value	1.00	Module #	1	
TEST#	1		DUST WT (GRAMS)	0.0024			start time
NOZZLE DIA. (inches)		0.1875	O2 %	5.69			944
FLUE AREA (ft^2)		31.503	CO2 %	13.33			stop time
BAROM PRES.(in. Hg)		29.21	METERED VOLUME	67.869	cu ft		1151
STACK PRESS (in.H2O)		-0.8	TOTAL TIME	120	min		
PITOT COEFFICIENT		0.832	TIME PER POINT	10	min		

POST-TEST LEAK CHECK

Start Meter Reading 344.753 Final Meter Reading 344.760

Sample Point	Δ P inches H_2O	Stack Temp. °F	Δ H inches H_2O	Meter Temp. °F	Impinger Outlet Temp. °F	O_2 %	CO_2 %	Start Meter Reading
1-A	1.10	179	3.48	75	52	5.5	13.7	276.846
1-B	1.20	174	3.70	85	42	5.8	13.3	
1-C	1.50	176	4.50	88	49	5.8	13.3	
1-D	1.35	173	4.10	86	54	5.3	13.6	
1-E	1.35	175	4.10	88	56	5.4	13.6	
1-F	1.25	176	3.80	89	62	5.9	13.2	
2-A	1.20	178	3.70	86	66	6.0	13.0	
2-B	1.25	177	3.80	90	54	5.4	13.5	
2-C	1.45	173	4.40	92	56	5.3	13.6	Final
2-D	1.30	173	4.10	88	58	5.2	13.7	Meter
2-E	1.15	177	3.58	86	60	5.1	13.8	Reading
2-F	1.05	174	3.30	88	51	6.1	12.8	344.715
AVG	1.26	175.42	3.88	86.75	55.00	5.57	13.43	

GAS VELOCITY IN FLUE (ft/sec)	69.57
GAS VOLUME IN FLUE (acfm)	131,496
GAS VOLUME IN FLUE (dscfm)	92,056
TOTAL VOLUME SAMPLED (dscf)	64.59
PARTICULATE CONC (g/dscf)	0.00004
PARTICULATE CONC (gr/dscf)	0.00057
PARTICULATE CONC (lb/hr)	0.5
PARTICULATE CONC (lbs/million btu)	0.0011
PARTICULATE CONC (lb/1000 lb gas flow)	0.001
PART. CONC (lb/1000 lb gas flow @ 50% excess air)	0.001
% EXCESS AIR	36.3
% ISOKINETIC	96.1

							MRC
PLANT	T E S Filer City		DATE	8/21/12			12.666
UNIT	1		Y value	1.00	Module #	1	
TEST#	2		DUST WT (GRAMS)	0.0044			start time
NOZZLE DIA. (inches)		0.1875	O2 %	5.60			1243
FLUE AREA (ft^2)		31.503	CO2 %	13.64			stop time
BAROM PRES.(in. Hg)		29.21	METERED VOLUME	66.672	cu ft		1450
STACK PRESS (in.H2O)		-0.8	TOTAL TIME	120	min		
PITOT COEFFICIENT		0.832	TIME PER POINT	10	min		

POST-TEST LEAK CHECK

Start Meter Reading 413.485 Final Meter Reading 413.487

Sample Point	Δ P inches H_2O	Stack Temp. °F	Δ H inches H_2O	Meter Temp. °F	Impinger Outlet Temp. °F	O_2 %	CO_2 %	Start Meter Reading
1-A	1.15	173	3.58	78	62	6.1	13.0	346.776
1-B	1.30	177	3.90	84	50	5.9	12.9	
1-C	1.35	176	4.10	83	55	5.8	13.1	
1-D	1.35	174	4.10	83	52	5.9	13.1	
1-E	1.15	174	3.58	82	51	5.2	13.7	
1-F	1.10	175	3.48	81	51	5.4	13.6	
2-A	1.10	176	3.48	78	58	5.2	13.7	
2-B	1.10	177	3.48	80	55	5.0	13.9	
2-C	1.25	174	3.80	79	56	5.2	13.9	Final
2-D	1.30	174	3.90	80	55	5.0	13.9	Meter
2-E	1.25	175	3.80	80	59	5.1	13.9	Reading
2-F	1.15	175	3.58	81	59	5.9	13.1	413.448
AVG	1.21	175.00	3.73	80.75	55.25	5.48	13.48	

GAS VELOCITY IN FLUE (ft/sec)	68.15
GAS VOLUME IN FLUE (acfm)	128,820
GAS VOLUME IN FLUE (dscfm)	90,189
TOTAL VOLUME SAMPLED (dscf)	64.13
PARTICULATE CONC (g/dscf)	0.00007
PARTICULATE CONC (gr/dscf)	0.00106
PARTICULATE CONC (lb/hr)	0.8
PARTICULATE CONC (lbs/million btu)	0.0020
PARTICULATE CONC (lb/1000 lb gas flow)	0.002
PART. CONC (lb/1000 lb gas flow @ 50% excess air)	0.002
% EXCESS AIR	35.6
% ISOKINETIC	97.4

PLANT	T E S Filer City		DATE	8/21/12			MRC 12.666
UNIT	1		Y value	1.00	Module #	1	
TEST#	3		DUST WT (GRAMS)	0.0026			start time
NOZZLE DIA. (inches)		0.1875	O2 %	7.15			1509
FLUE AREA (ft^2)		31.503	CO2 %	12.41			stop time
BAROM PRES.(in. Hg)		29.21	METERED VOLUME	67.473	cu ft		1713
STACK PRESS (in.H2O)		-0.8	TOTAL TIME	120	min		
PITOT COEFFICIENT		0.832	TIME PER POINT	10	min		

POST-TEST LEAK CHECK

Start Meter Reading 482.654 Final Meter Reading 482.658

Sample Point	Δ P inches H_2O	Stack Temp. °F	Δ H inches H_2O	Meter Temp. °F	Impinger Outlet Temp. °F	O_2 %	CO_2 %	Start Meter Reading
1-A	1.25	176	3.80	79	56	6.8	12.3	415.153
1-B	1.25	172	3.80	77	54	6.5	12.5	
1-C	1.45	174	4.40	82	52	6.6	12.5	
1-D	1.35	173	4.10	80	51	6.5	12.6	
1-E	1.30	171	3.90	81	43	6.4	12.7	
1-F	1.15	170	3.58	81	37	7.2	11.8	
2-A	1.20	182	3.70	79	53	6.8	12.2	
2-B	1.15	180	3.58	80	51	7.1	12.2	
2-C	1.35	180	4.10	79	49	7.5	11.9	Final
2-D	1.25	173	3.80	80	44	7.0	12.3	Meter
2-E	1.25	174	3.80	78	44	7.5	11.8	Reading
2-F	1.10	174	3.48	80	45	7.7	11.8	482.626
AVG	1.25	174.92	3.84	79.67	48.25	6.97	12.22	

GAS VELOCITY IN FLUE (ft/sec)	69.68
GAS VOLUME IN FLUE (acfm)	131,705
GAS VOLUME IN FLUE (dscfm)	90,605
TOTAL VOLUME SAMPLED (dscf)	65.04
PARTICULATE CONC (g/dscf)	0.00004
PARTICULATE CONC (gr/dscf)	0.00062
PARTICULATE CONC (lb/hr)	0.5
PARTICULATE CONC (lbs/million btu)	0.0013
PARTICULATE CONC (lb/1000 lb gas flow)	0.001
PART. CONC (lb/1000 lb gas flow @ 50% excess air)	0.001
% EXCESS AIR	50.8
% ISOKINETIC	98.3

Attachment 4
Unit #1 PM Test Field and Laboratory Data Sheets

PLANT T E S Filer City UNIT 1 TEST NO. 1 DATE 08/21/12

WEIGHT OF PARTICULATE COLLECTED

FILTER NUMBER	FINAL WEIGHT	TARE WEIGHT	WEIGHT GAIN
4-D	2.4465	2.4465	0.0000
3	2.3309	2.3287	0.0022
			0.0000
			0.0000
WASH WEIGHT	29.2610	29.2608	0.0002
TOTAL			0.0024

VOLUME OF LIQUID WATER COLLECTED

	FINAL VOLUME	TARE VOLUME	LIQUID COLLECTED
IMPINGER (ml)	296	100	196
SILICA GEL (grams)	521.75	503.7	18.05
TOTAL VOLUME			214.05

PLANT T E S Filer City UNIT 1 TEST NO. 2 DATE 08/21/12

WEIGHT OF PARTICULATE COLLECTED

FILTER NUMBER	FINAL WEIGHT	TARE WEIGHT	WEIGHT GAIN
3-A	2.3968	2.3930	0.0038
1-B	2.2251	2.2250	0.0001
			0.0000
			0.0000
WASH WEIGHT	29.2732	29.2727	0.0005
TOTAL			0.0044

VOLUME OF LIQUID WATER COLLECTED

	FINAL VOLUME	TARE VOLUME	LIQUID COLLECTED
IMPINGER (ml)	296	100	196
SILICA GEL (grams)	476.65	459.2	17.45
TOTAL VOLUME			213.45

PLANT T E S Filer City UNIT 1 TEST NO. 3 DATE 08/21/12

WEIGHT OF PARTICULATE COLLECTED

FILTER NUMBER	FINAL WEIGHT	TARE WEIGHT	WEIGHT GAIN
4	2.4902	2.4902	0.0000
20	2.3827	2.3803	0.0024
			0.0000
			0.0000
WASH WEIGHT	49.6181	49.6179	0.0002
TOTAL			0.0026

VOLUME OF LIQUID WATER COLLECTED

	FINAL VOLUME	TARE VOLUME	LIQUID COLLECTED
IMPINGER (ml)	332	100	232
SILICA GEL (grams)	498.45	485.45	13
TOTAL VOLUME			245

PLANT T E S Filer City UNIT 1 TEST NO. 1 DATE 8/21/12

WEIGHT OF PARTICULATE COLLECTED

FILTER NUMBER	FINAL WEIGHT	TARE WEIGHT	WEIGHT GAIN
3	2.3309	2.3287	
4-D	2.4465	2.4465	
WASH WEIGHT (P)	29.2610	29.2608	
TOTAL			

3/16-4

VOLUME OF LIQUID WATER COLLECTED

	FINAL VOLUME	TARE VOLUME	LIQUID COLLECTED
IMPINGER (ml)	296	100	
SILICA GEL (grams)	521.75	503.70	
TOTAL VOLUME			

PLANT T E S Filer City UNIT 1 TEST NO. 2 DATE 8/21/12

WEIGHT OF PARTICULATE COLLECTED

FILTER NUMBER	FINAL WEIGHT	TARE WEIGHT	WEIGHT GAIN
3-A	2.3968	2.3930	
1-B	2.2251	2.2250	
WASH WEIGHT (W)	29.2732	29.2727	
TOTAL			

3/16-5

VOLUME OF LIQUID WATER COLLECTED

	FINAL VOLUME	TARE VOLUME	LIQUID COLLECTED
IMPINGER (ml)	~~289~~ 296	100	
SILICA GEL (grams)	476.65	459.20	
TOTAL VOLUME			

PLANT T E S Filer City UNIT 1 TEST NO. 3 DATE 8/21/12

WEIGHT OF PARTICULATE COLLECTED

FILTER NUMBER	FINAL WEIGHT	TARE WEIGHT	WEIGHT GAIN
4	~~3322~~ 4902	2.4902	
20	2.3827	2.3803	
WASH WEIGHT (C-3)	49.6181	49.6179	
TOTAL			

3/16-4

VOLUME OF LIQUID WATER COLLECTED

	FINAL VOLUME	TARE VOLUME	LIQUID COLLECTED
IMPINGER (ml)	332	100	
SILICA GEL (grams)	498.45	485.45	
TOTAL VOLUME			

Attachment 5
Unit #1 TGNMO Test Calculation Sheets

TES FILER CITY

EUBOILER1

TGNMOC Instrument Performance Data

August 21, 2012

Run 1	TGNMOC
Measurement Parameter:	Propane
Instrument Span, ppm:	50
Upscale Gas Cylinder Value, ppm:	15.10
Initial Zero Gas Value, ppm:	0.04
Initial Upscale Gas Value, ppm :	15.20
Run Average, ppm:	**1.94**
Final Zero Gas Value, ppm:	0.25
Final Upscale Gas Value, ppm:	14.81
Zero Drift, percent of span:	0.4%
Upscale Drift, percent of span:	0.6%
Drift Corrected Value, ppm:	**1.80**

Run 2	TGNMOC
Measurement Parameter:	Propane
Instrument Span, ppm:	50
Upscale Gas Cylinder Value, ppm:	15.10
Initial Zero Gas Value, ppm:	0.25
Initial Upscale Gas Value, ppm :	14.81
Run Average, ppm:	**0.78**
Final Zero Gas Value, ppm:	0.18
Final Upscale Gas Value, ppm:	14.71
Zero Drift, percent of span:	0.3%
Upscale Drift, percent of span:	0.8%
Drift Corrected Value, ppm:	**0.56**

Run 3	TGNMOC
Measurement Parameter:	Propane
Instrument Span, ppm:	50
Upscale Gas Cylinder Value, ppm:	15.10
Initial Zero Gas Value, ppm:	0.18
Initial Upscale Gas Value, ppm :	14.71
Run Average, ppm:	**0.55**
Final Zero Gas Value, ppm:	-0.01
Final Upscale Gas Value, ppm:	14.61
Zero Drift, percent of span:	0.1%
Upscale Drift, percent of span:	1.0%
Drift Corrected Value, ppm:	**0.46**

The Method 25A zero and calibration drift limit is < 3% of instrument span

TGNMOC Emission Rate Supporting Field Data
TES FILER CITY
Unit 1

Client : TES Filer City
Project No. : 4100443
Source I.D.: Unit 1
Site Loc.: Outlet

Date : 8/21/2012
Run #: 1

	delta P	Sqrt delta P	delta H	Inlet Tm	Outlet Tm	Ave. Tm	Ts	Vacuum
1	1.10	1.0488	3.48		75	75.0	179	7
2	1.20	1.0954	3.7		85	85.0	174	8.5
3	1.50	1.2247	4.5		88	88.0	176	11
4	1.35	1.1619	4.1		86	86.0	173	10
5	1.35	1.1619	4.1		88	88.0	175	10.5
6	1.25	1.1180	3.8		89	89.0	176	10
7	1.20	1.0954	3.7		86	86.0	178	10
8	1.25	1.1180	3.8		90	90.0	177	10
9	1.45	1.2042	4.4		92	92.0	173	11
10	1.30	1.1402	4.1		88	88.0	173	8.5
11	1.15	1.0724	3.58		86	86.0	177	9
12	1.05	1.0247	3.3		88	88.0	174	7.5

Meter Vol. Initial =	276.846		
Meter Vol. Final =	344.715		
Total Meter Vol. =	67.869		
ave. SQRT delta P =	1.1221		
ave. delta P =	1.2625		
ave. delta H =	3.880		
ave. Tm =	86.8		
ave. Ts =	175.4		
Moisture Vol, ml =	196.0	grams=	18.1
	Initial	Final	Total
Cont. 1	100.0	296.0	196.0
Cont. 2	0.0	0.0	0.0
Cont. 3	0.0	0.0	0.0
Cont. 4	503.7	521.8	18.1

Client : TES Filer City
Project No. : 4100443
Source I.D.: Unit 1
Site Loc.: Outlet

Date : 8/21/2012
Run #: 2

	delta P	Sqrt delta P	delta H	Inlet Tm	Outlet Tm	Ave. Tm	Ts	Vacuum
1	1.15	1.0724	3.58		78	78.0	173	8
2	1.30	1.1402	3.9		84	84.0	177	8
3	1.35	1.1619	4.1		83	83.0	176	9
4	1.35	1.1619	4.1		83	83.0	174	9
5	1.15	1.0724	3.58		82	82.0	174	7.5
6	1.10	1.0488	3.48		81	81.0	175	8
7	1.10	1.0488	3.48		78	78.0	176	7
8	1.10	1.0488	3.48		80	80.0	177	7
9	1.25	1.1180	3.8		79	79.0	174	9
10	1.30	1.1402	3.9		80	80.0	174	9
11	1.25	1.1180	3.8		80	80.0	175	8
12	1.15	1.0724	3.58		81	81.0	175	7.5

Meter Vol. Initial =	346.776		
Meter Vol. Final =	413.448		
Total Meter Vol. =	66.672		
ave. SQRT delta P =	1.1003		
ave. delta P =	1.2125		
ave. delta H =	3.732		
ave. Tm =	80.8		
ave. Ts =	175.0		
Moisture Vol, ml =	196.0	grams=	17.5
	Initial	Final	Total
Cont. 1	100.0	296.0	196.0
Cont. 2	0.0	0.0	0.0
Cont. 3	0.0	0.0	0.0
Cont. 4	459.2	476.7	17.5

Client : TES Filer City
Project No. : 4100443
Source I.D.: Unit 1
Site Loc.: Outlet

Date : 8/21/2012
Run #: 3

	delta P	Sqrt delta P	delta H	Inlet Tm	Outlet Tm	Ave. Tm	Ts	Vacuum
1	1.25	1.1180	3.8		79	79.0	176	8
2	1.25	1.1180	3.8		77	77.0	172	8
3	1.45	1.2042	4.4		82	82.0	174	9
4	1.35	1.1619	4.1		80	80.0	173	8
5	1.30	1.1402	3.9		81	81.0	171	8
6	1.15	1.0724	3.58		81	81.0	170	6
7	1.20	1.0954	3.7		79	79.0	182	8
8	1.15	1.0724	3.58		80	80.0	180	8
9	1.35	1.1619	4.1		79	79.0	180	7
10	1.25	1.1180	3.8		80	80.0	173	8
11	1.25	1.1180	3.8		78	78.0	174	7
12	1.10	1.0488	3.48		80	80.0	174	7

Meter Vol. Initial =	415.153		
Meter Vol. Final =	482.626		
Total Meter Vol. =	67.473		
ave. SQRT delta P =	1.1191		
ave. delta P =	1.2542		
ave. delta H =	3.837		
ave. Tm =	79.7		
ave. Ts =	174.9		
Moisture Vol, ml =	232.0	grams=	13.0
	Initial	Final	Total
Cont. 1	100.0	332.0	232.0
Cont. 2	0.0	0.0	0.0
Cont. 3	0.0	0.0	0.0
Cont. 4	485.5	498.5	13.0

Unit 1, Run 1

DATE	TIME	TGNMOC
Start Run 1		as C3
8/21/2012	9:45:29 AM	4.03
8/21/2012	9:46:29 AM	4.18
8/21/2012	9:47:29 AM	4.63
8/21/2012	9:48:29 AM	4.04
8/21/2012	9:49:29 AM	4.02
8/21/2012	9:50:29 AM	4.03
8/21/2012	9:51:29 AM	3.74
8/21/2012	9:52:29 AM	3.73
8/21/2012	9:53:29 AM	3.59
8/21/2012	9:54:29 AM	3.73
8/21/2012	9:55:29 AM	3.59
8/21/2012	9:56:29 AM	3.44
8/21/2012	9:57:29 AM	3.3
8/21/2012	9:58:29 AM	3.3
8/21/2012	9:59:29 AM	3.16
8/21/2012	10:00:29 AM	3.16
8/21/2012	10:01:29 AM	3.15
8/21/2012	10:02:29 AM	2.97
8/21/2012	10:03:29 AM	2.97
8/21/2012	10:04:29 AM	2.81
8/21/2012	10:05:29 AM	2.67
8/21/2012	10:06:29 AM	2.67
8/21/2012	10:07:29 AM	2.67
8/21/2012	10:08:29 AM	2.67
8/21/2012	10:09:29 AM	2.52
8/21/2012	10:10:29 AM	2.22
8/21/2012	10:11:29 AM	2.37
8/21/2012	10:12:29 AM	2.37
8/21/2012	10:13:29 AM	2.37
8/21/2012	10:14:29 AM	2.37
8/21/2012	10:15:29 AM	2.23
8/21/2012	10:16:29 AM	2.23
8/21/2012	10:17:29 AM	2.22
8/21/2012	10:18:29 AM	2.09
8/21/2012	10:19:29 AM	2.09
8/21/2012	10:20:29 AM	1.94
8/21/2012	10:21:29 AM	2.09
8/21/2012	10:22:29 AM	2.09
8/21/2012	10:23:29 AM	2.09
8/21/2012	10:24:29 AM	2.1
8/21/2012	10:25:29 AM	1.94
8/21/2012	10:26:29 AM	1.94
8/21/2012	10:27:29 AM	2.09
8/21/2012	10:28:29 AM	1.94
8/21/2012	10:29:29 AM	1.78
8/21/2012	10:30:29 AM	1.78

8/21/2012	10:31:29 AM	1.79	
8/21/2012	10:32:29 AM	1.78	
8/21/2012	10:33:29 AM	1.94	
8/21/2012	10:34:29 AM	1.94	
8/21/2012	10:35:29 AM	1.77	
8/21/2012	10:36:29 AM	1.77	
8/21/2012	10:37:29 AM	1.77	
8/21/2012	10:38:29 AM	1.78	
8/21/2012	10:39:29 AM	1.77	
8/21/2012	10:40:29 AM	1.78	
8/21/2012	10:41:29 AM	1.78	
8/21/2012	10:42:29 AM	1.78	
8/21/2012	10:43:29 AM	1.78	
8/21/2012	10:44:29 AM	1.63	
8/21/2012	10:45:29 AM	1.63	
8/21/2012	10:46:29 AM	1.63	Port Chang
8/21/2012	10:47:29 AM	1.63	Port Chang
8/21/2012	10:48:29 AM	1.77	Port Chang
8/21/2012	10:49:29 AM	1.49	
8/21/2012	10:50:29 AM	1.48	
8/21/2012	10:51:29 AM	1.64	
8/21/2012	10:52:29 AM	1.49	
8/21/2012	10:53:29 AM	1.63	
8/21/2012	10:54:29 AM	1.48	
8/21/2012	10:55:29 AM	1.33	
8/21/2012	10:56:29 AM	1.49	
8/21/2012	10:57:29 AM	1.49	
8/21/2012	10:58:29 AM	1.48	
8/21/2012	10:59:29 AM	1.49	
8/21/2012	11:00:29 AM	1.48	
8/21/2012	11:01:29 AM	1.34	
8/21/2012	11:02:29 AM	1.49	
8/21/2012	11:03:29 AM	1.33	
8/21/2012	11:04:29 AM	1.33	
8/21/2012	11:05:29 AM	1.33	
8/21/2012	11:06:29 AM	1.34	
8/21/2012	11:07:29 AM	1.34	
8/21/2012	11:08:29 AM	1.48	
8/21/2012	11:09:29 AM	1.19	
8/21/2012	11:10:29 AM	1.34	
8/21/2012	11:11:29 AM	1.34	
8/21/2012	11:12:29 AM	1.34	
8/21/2012	11:13:29 AM	1.33	
8/21/2012	11:14:29 AM	1.35	
8/21/2012	11:15:29 AM	1.34	
8/21/2012	11:16:29 AM	1.48	
8/21/2012	11:17:29 AM	1.05	
8/21/2012	11:18:29 AM	1.19	
8/21/2012	11:19:29 AM	1.2	

8/21/2012	11:20:29 AM	1.49	
8/21/2012	11:21:29 AM	1.34	
8/21/2012	11:22:29 AM	1.2	
8/21/2012	11:23:29 AM	1.34	
8/21/2012	11:24:29 AM	1.2	
8/21/2012	11:25:29 AM	1.19	
8/21/2012	11:26:29 AM	1.35	
8/21/2012	11:27:29 AM	1.34	
8/21/2012	11:28:29 AM	1.33	
8/21/2012	11:29:29 AM	1.34	
8/21/2012	11:30:29 AM	1.34	
8/21/2012	11:31:29 AM	1.34	
8/21/2012	11:32:29 AM	1.33	
8/21/2012	11:33:29 AM	1.19	
8/21/2012	11:34:29 AM	1.04	
8/21/2012	11:35:29 AM	1.2	
8/21/2012	11:36:29 AM	1.2	
8/21/2012	11:37:29 AM	1.2	
8/21/2012	11:38:29 AM	1.2	
8/21/2012	11:39:29 AM	1.34	
8/21/2012	11:40:29 AM	1.19	
8/21/2012	11:41:29 AM	1.34	
8/21/2012	11:42:29 AM	1.19	
8/21/2012	11:43:29 AM	1.2	
8/21/2012	11:44:29 AM	1.04	
8/21/2012	11:45:29 AM	1.19	
8/21/2012	11:46:29 AM	1.19	
8/21/2012	11:47:29 AM	1.34	
8/21/2012	11:48:29 AM	1.19	
Average, Run 1		**1.94**	
8/21/2012	11:49:29 AM	0.35	
8/21/2012	11:50:29 AM	0.25	
8/21/2012	11:51:29 AM	14.51	
8/21/2012	**11:52:29 AM**	**14.81**	**Upscale Ga**
8/21/2012	11:53:29 AM	14.50	
8/21/2012	11:54:29 AM	14.40	
8/21/2012	11:55:29 AM	13.71	
8/21/2012	11:56:29 AM	13.46	
8/21/2012	11:57:29 AM	14.50	
8/21/2012	11:58:29 AM	0.40	
8/21/2012	11:59:29 AM	0.25	
8/21/2012	12:00:29 PM	0.34	
8/21/2012	12:01:29 PM	0.25	
8/21/2012	12:02:29 PM	0.29	
8/21/2012	12:03:29 PM	0.25	
8/21/2012	**12:04:29 PM**	**0.25**	**Zero Gas**

Unit 1, Run 2

DATE	TIME	TGNMOC
Start Run 2		as C3
8/21/2012	12:47:02 PM	1.05
8/21/2012	12:48:02 PM	1.19
8/21/2012	12:49:02 PM	1.2
8/21/2012	12:50:02 PM	1.04
8/21/2012	12:51:02 PM	1.34
8/21/2012	12:52:02 PM	1.19
8/21/2012	12:53:02 PM	1.19
8/21/2012	12:54:02 PM	1.04
8/21/2012	12:55:02 PM	1.2
8/21/2012	12:56:02 PM	1.04
8/21/2012	12:57:02 PM	1.2
8/21/2012	12:58:02 PM	1.04
8/21/2012	12:59:02 PM	1.04
8/21/2012	1:00:02 PM	1.19
8/21/2012	1:01:02 PM	1.04
8/21/2012	1:02:02 PM	0.9
8/21/2012	1:03:02 PM	1.04
8/21/2012	1:04:02 PM	1.19
8/21/2012	1:05:02 PM	1.19
8/21/2012	1:06:02 PM	0.89
8/21/2012	1:07:02 PM	1.03
8/21/2012	1:08:02 PM	0.88
8/21/2012	1:09:02 PM	0.88
8/21/2012	1:10:02 PM	1.03
8/21/2012	1:11:02 PM	1.04
8/21/2012	1:12:02 PM	0.74
8/21/2012	1:13:02 PM	1.04
8/21/2012	1:14:02 PM	0.41
8/21/2012	1:15:02 PM	1.18
8/21/2012	1:16:02 PM	0.9
8/21/2012	1:17:02 PM	0.9
8/21/2012	1:18:02 PM	0.89
8/21/2012	1:19:02 PM	0.9
8/21/2012	1:20:02 PM	1.05
8/21/2012	1:21:02 PM	0.89
8/21/2012	1:22:02 PM	0.9
8/21/2012	1:23:02 PM	0.89
8/21/2012	1:24:02 PM	0.89
8/21/2012	1:25:02 PM	1.04
8/21/2012	1:26:02 PM	1.04
8/21/2012	1:27:02 PM	1.04
8/21/2012	1:28:02 PM	1.04
8/21/2012	1:29:02 PM	1.03
8/21/2012	1:30:02 PM	0.89
8/21/2012	1:31:02 PM	0.89
8/21/2012	1:32:02 PM	0.9

8/21/2012	1:33:02 PM	0.9	
8/21/2012	1:34:02 PM	0.89	
8/21/2012	1:35:02 PM	0.74	
8/21/2012	1:36:02 PM	0.9	
8/21/2012	1:37:02 PM	1.04	
8/21/2012	1:38:02 PM	0.89	
8/21/2012	1:39:02 PM	0.89	
8/21/2012	1:40:02 PM	0.74	
8/21/2012	1:41:02 PM	1.04	
8/21/2012	1:42:02 PM	0.9	
8/21/2012	1:43:02 PM	0.9	
8/21/2012	1:44:02 PM	0.89	
8/21/2012	1:45:02 PM	1.03	
8/21/2012	1:46:02 PM	0.75	
8/21/2012	1:47:02 PM	0.74	
8/21/2012	1:48:02 PM	0.74	
8/21/2012	1:49:02 PM	0.74	
8/21/2012	1:50:02 PM	0.75	Port Change
8/21/2012	1:51:02 PM	0.89	Port Change
8/21/2012	1:52:02 PM	0.74	Port Change
8/21/2012	1:53:02 PM	0.75	
8/21/2012	1:54:02 PM	0.55	
8/21/2012	1:55:02 PM	0.75	
8/21/2012	1:56:02 PM	0.4	
8/21/2012	1:57:02 PM	0.56	
8/21/2012	1:58:02 PM	0.56	
8/21/2012	1:59:02 PM	0.55	
8/21/2012	2:00:02 PM	0.74	
8/21/2012	2:01:02 PM	0.4	
8/21/2012	2:02:02 PM	0.55	
8/21/2012	2:03:02 PM	0.74	
8/21/2012	2:04:02 PM	0.74	
8/21/2012	2:05:02 PM	0.55	
8/21/2012	2:06:02 PM	0.56	
8/21/2012	2:07:02 PM	0.74	
8/21/2012	2:08:02 PM	0.75	
8/21/2012	2:09:02 PM	0.74	
8/21/2012	2:10:02 PM	0.74	
8/21/2012	2:11:02 PM	0.55	
8/21/2012	2:12:02 PM	0.41	
8/21/2012	2:13:02 PM	0.74	
8/21/2012	2:14:02 PM	0.56	
8/21/2012	2:15:02 PM	0.74	
8/21/2012	2:16:02 PM	0.55	
8/21/2012	2:17:02 PM	0.56	
8/21/2012	2:18:02 PM	0.55	
8/21/2012	2:19:02 PM	0.74	
8/21/2012	2:20:02 PM	0.74	
8/21/2012	2:21:02 PM	0.55	

8/21/2012	2:22:02 PM	0.89	
8/21/2012	2:23:02 PM	0.74	
8/21/2012	2:24:02 PM	0.26	
8/21/2012	2:25:02 PM	0.74	
8/21/2012	2:26:02 PM	0.56	
8/21/2012	2:27:02 PM	-0.03	
8/21/2012	2:28:02 PM	0.56	
8/21/2012	2:29:02 PM	0.55	
8/21/2012	2:30:02 PM	0.4	
8/21/2012	2:31:02 PM	0.75	
8/21/2012	2:32:02 PM	0.74	
8/21/2012	2:33:02 PM	0.74	
8/21/2012	2:34:02 PM	0.55	
8/21/2012	2:35:02 PM	0.56	
8/21/2012	2:36:02 PM	0.55	
8/21/2012	2:37:02 PM	0.4	
8/21/2012	2:38:02 PM	0.55	
8/21/2012	2:39:02 PM	0.55	
8/21/2012	2:40:02 PM	0.75	
8/21/2012	2:41:02 PM	0.56	
8/21/2012	2:42:02 PM	0.26	
8/21/2012	2:43:02 PM	0.56	
8/21/2012	2:44:02 PM	0.4	
8/21/2012	2:45:02 PM	0.4	
8/21/2012	2:46:02 PM	0.74	
8/21/2012	2:47:02 PM	0.55	
8/21/2012	2:48:02 PM	0.41	
8/21/2012	2:49:02 PM	0.41	
8/21/2012	2:50:02 PM	0.41	
8/21/2012	2:51:02 PM	0.75	
Average, Run 2		**0.78**	
8/21/2012	2:52:02 PM	0.56	
8/21/2012	2:53:02 PM	0.26	
8/21/2012	2:54:02 PM	0.41	
8/21/2012	2:55:02 PM	0.74	
8/21/2012	2:56:02 PM	7.59	
8/21/2012	2:57:02 PM	1.33	
8/21/2012	2:58:02 PM	0.89	
8/21/2012	**2:59:02 PM**	**0.18**	**Zero Gas**
8/21/2012	3:00:02 PM	0.25	
8/21/2012	3:01:02 PM	0.25	
8/21/2012	3:02:02 PM	-0.01	
8/21/2012	3:03:02 PM	0.19	
8/21/2012	3:04:02 PM	14.05	
8/21/2012	3:05:02 PM	12.12	
8/21/2012	3:06:02 PM	11.92	
8/21/2012	3:07:02 PM	14.31	
8/21/2012	3:08:02 PM	14.45	
8/21/2012	**3:09:02 PM**	**14.71**	**Upscale Gas**

Unit 1, Run 3

DATE	TIME	TGNMOC
Start Run 3		as C3
8/21/2012	3:10:24 PM	2.22
8/21/2012	3:11:24 PM	1.62
8/21/2012	3:12:24 PM	1.33
8/21/2012	3:13:24 PM	1.33
8/21/2012	3:14:24 PM	0.56
8/21/2012	3:15:24 PM	0.74
8/21/2012	3:16:24 PM	0.54
8/21/2012	3:17:24 PM	0.89
8/21/2012	3:18:24 PM	0.89
8/21/2012	3:19:24 PM	1.04
8/21/2012	3:20:24 PM	0.75
8/21/2012	3:21:24 PM	0.75
8/21/2012	3:22:24 PM	0.9
8/21/2012	3:23:24 PM	0.55
8/21/2012	3:24:24 PM	0.56
8/21/2012	3:25:24 PM	0.56
8/21/2012	3:26:24 PM	0.55
8/21/2012	3:27:24 PM	0.56
8/21/2012	3:28:24 PM	0.9
8/21/2012	3:29:24 PM	0.74
8/21/2012	3:30:24 PM	0.74
8/21/2012	3:31:24 PM	0.55
8/21/2012	3:32:24 PM	0.74
8/21/2012	3:33:24 PM	0.55
8/21/2012	3:34:24 PM	0.56
8/21/2012	3:35:24 PM	0.89
8/21/2012	3:36:24 PM	0.55
8/21/2012	3:37:24 PM	0.55
8/21/2012	3:38:24 PM	0.55
8/21/2012	3:39:24 PM	0.56
8/21/2012	3:40:24 PM	0.74
8/21/2012	3:41:24 PM	0.54
8/21/2012	3:42:24 PM	0.4
8/21/2012	3:43:24 PM	0.4
8/21/2012	3:44:24 PM	0.55
8/21/2012	3:45:24 PM	0.39
8/21/2012	3:46:24 PM	0.56
8/21/2012	3:47:24 PM	0.75
8/21/2012	3:48:24 PM	0.56
8/21/2012	3:49:24 PM	0.26
8/21/2012	3:50:24 PM	0.55
8/21/2012	3:51:24 PM	0.41
8/21/2012	3:52:24 PM	0.56
8/21/2012	3:53:24 PM	0.74
8/21/2012	3:54:24 PM	0.55

8/21/2012	3:55:24 PM	-0.03	
8/21/2012	3:56:24 PM	0.56	
8/21/2012	3:57:24 PM	0.56	
8/21/2012	3:58:24 PM	0.55	
8/21/2012	3:59:24 PM	0.26	
8/21/2012	4:00:24 PM	0.26	
8/21/2012	4:01:24 PM	0.27	
8/21/2012	4:02:24 PM	0.11	
8/21/2012	4:03:24 PM	0.56	
8/21/2012	4:04:24 PM	0.41	
8/21/2012	4:05:24 PM	0.57	
8/21/2012	4:06:24 PM	0.56	
8/21/2012	4:07:24 PM	0.41	
8/21/2012	4:08:24 PM	0.12	
8/21/2012	4:09:24 PM	0.41	
8/21/2012	4:10:24 PM	0.11	
8/21/2012	4:11:24 PM	0.56	
8/21/2012	4:12:24 PM	0.56	
8/21/2012	4:13:24 PM	0.4	
8/21/2012	4:14:24 PM	0.56	Port Change
8/21/2012	4:15:24 PM	0.74	Port Change
8/21/2012	4:16:24 PM	0.55	Port Change
8/21/2012	4:17:24 PM	0.56	
8/21/2012	4:18:24 PM	0.55	
8/21/2012	4:19:24 PM	0.56	
8/21/2012	4:20:24 PM	0.41	
8/21/2012	4:21:24 PM	0.4	
8/21/2012	4:22:24 PM	0.56	
8/21/2012	4:23:24 PM	0.74	
8/21/2012	4:24:24 PM	0.55	
8/21/2012	4:25:24 PM	0.4	
8/21/2012	4:26:24 PM	0.41	
8/21/2012	4:27:24 PM	0.4	
8/21/2012	4:28:24 PM	0.4	
8/21/2012	4:29:24 PM	0.4	
8/21/2012	4:30:24 PM	0.41	
8/21/2012	4:31:24 PM	0.4	
8/21/2012	4:32:24 PM	0.4	
8/21/2012	4:33:24 PM	0.41	
8/21/2012	4:34:24 PM	0.4	
8/21/2012	4:35:24 PM	0.41	
8/21/2012	4:36:24 PM	0.55	
8/21/2012	4:37:24 PM	0.9	
8/21/2012	4:38:24 PM	0.4	
8/21/2012	4:39:24 PM	0.4	
8/21/2012	4:40:24 PM	0.56	
8/21/2012	4:41:24 PM	0.56	
8/21/2012	4:42:24 PM	0.56	

8/21/2012	4:43:24 PM	0.4	
8/21/2012	4:44:24 PM	0.55	
8/21/2012	4:45:24 PM	0.56	
8/21/2012	4:46:24 PM	0.41	
8/21/2012	4:47:24 PM	0.4	
8/21/2012	4:48:24 PM	0.55	
8/21/2012	4:49:24 PM	0.4	
8/21/2012	4:50:24 PM	0.55	
8/21/2012	4:51:24 PM	-0.04	
8/21/2012	4:52:24 PM	0.74	
8/21/2012	4:53:24 PM	0.4	
8/21/2012	4:54:24 PM	0.56	
8/21/2012	4:55:24 PM	0.41	
8/21/2012	4:56:24 PM	0.55	
8/21/2012	4:57:24 PM	0.55	
8/21/2012	4:58:24 PM	0.41	
8/21/2012	4:59:24 PM	0.56	
8/21/2012	5:00:24 PM	0.55	
8/21/2012	5:01:24 PM	0.4	
8/21/2012	5:02:24 PM	0.55	
8/21/2012	5:03:24 PM	0.4	
8/21/2012	5:04:24 PM	0.4	
8/21/2012	5:05:24 PM	0.41	
8/21/2012	5:06:24 PM	0.74	
8/21/2012	5:07:24 PM	0.4	
8/21/2012	5:08:24 PM	0.4	
8/21/2012	5:09:24 PM	0.56	
8/21/2012	5:10:24 PM	0.55	
8/21/2012	5:11:24 PM	0.41	
8/21/2012	5:12:24 PM	0.55	
Average, Run 3		**0.55**	
8/21/2012	5:13:24 PM	0.19	
8/21/2012	5:14:24 PM	0.13	
8/21/2012	5:15:24 PM	0.14	
8/21/2012	5:16:24 PM	0.18	
8/21/2012	5:17:24 PM	0.13	
8/21/2012	**5:18:24 PM**	**-0.01**	**Zero Gas**
8/21/2012	5:19:24 PM	43.83	
8/21/2012	5:20:24 PM	42.62	
8/21/2012	5:21:24 PM	42.77	
8/21/2012	5:22:24 PM	42.91	
8/21/2012	5:23:24 PM	42.62	
8/21/2012	5:24:24 PM	42.63	
8/21/2012	**5:25:24 PM**	**14.61**	**Upscale Gas**
8/21/2012	5:26:24 PM	0.89	
8/21/2012	5:27:24 PM	0.89	

Attachment 6
Unit #1 Operating Data

P75 Hourly D Summary

Facility Name: T.E.S. Filer City Station **Location:** Filer City, MI **Source:** Boiler 1

Period: 08/21/12 00:00:00 To 08/21/12 23:59:59; **Records** = 24

Note: All averages are bias adjusted where applicable.

Date	Hr	PC	Oper Time	Load Bin	Blr 1 Op minutes	MC	Blr 1 CO2 %	MODC	Blr 1 Stk Flow scfh	MC	Blr 1 CO2 scf	MC	Blr 1 CO2 tons	MC	Blr 1 Steam klbs	MC	
08/21/12	0	8	1.00	10	60	00	12.0	01	5772000	00	692640	00	39.5	00	299	00	
08/21/12	1	8	1.00	10	60	00	11.9	01	5968000	00	710192	00	40.5	00	301	00	
08/21/12	2	8	1.00	10	60	00	11.9	01	6025000	00	716975	00	40.9	00	305	00	
08/21/12	3	8	1.00	10	60	00	11.9	01	6023000	00	716737	00	40.9	00	304	00	
08/21/12	4	8	1.00	10	60	00	12.1	01	5983000	00	723943	00	41.3	00	307	00	
08/21/12	5	8	1.00	10	60	00	12.2	01	5965000	00	727730	00	41.5	00	306	00	
08/21/12	6	8	1.00	10	60	00	12.1	01	5977000	00	723217	00	41.2	00	308	00	
08/21/12	7	8	1.00	10	60	00	11.8	01	5937000	00	700566	00	39.9	00	305	00	
08/21/12	8	8	1.00	10	60	00	12.0	01	5819000	00	698280	00	39.8	00	305	00	
08/21/12	9	8	1.00	10	60	00	12.3	01	5953000	00	732219	00	41.7	00	305	00	
08/21/12	10	8	1.00	10	60	00	11.7	01	5973000	00	698841	00	39.8	00	306	00	RUN 1
08/21/12	11	8	1.00	10	60	00	12.0	01	5884000	00	706080	00	40.2	00	308	00	
08/21/12	12	8	1.00	10	60	00	12.1	01	5890000	00	712690	00	40.6	00	309	00	
08/21/12	13	8	1.00	10	60	00	12.0	01	5865000	00	703800	00	40.1	00	306	00	RUN 2
08/21/12	14	8	1.00	10	60	00	12.3	01	5853000	00	719919	00	41.0	00	310	00	
08/21/12	15	8	1.00	10	60	00	12.1	01	5999000	00	725879	00	41.4	00	311	00	
08/21/12	16	8	1.00	10	60	00	12.2	01	5880000	00	717360	00	40.9	00	309	00	RUN 3
08/21/12	17	8	1.00	10	60	00	12.2	01	5833000	00	711626	00	40.6	00	309	00	
08/21/12	18	8	1.00	10	60	00	12.2	01	5755000	00	702110	00	40.0	00	306	00	
08/21/12	19	8	1.00	10	60	00	12.2	01	5773000	00	704306	00	40.1	00	307	00	
08/21/12	20	8	1.00	10	60	00	11.9	01	5836000	00	694484	00	39.6	00	302	00	
08/21/12	21	8	1.00	10	60	00	12.4	01	5795000	00	718580	00	41.0	00	311	00	
08/21/12	22	8	1.00	10	60	00	12.2	01	5952000	00	726144	00	41.4	00	313	00	
08/21/12	23	8	1.00	10	60	00	12.1	01	5741000	00	694661	00	39.6	00	303	00	
Report Average:					60		12.1		5893792		711624		40.6		306		
Report Max Values:					60		12.4		6025000		732219		41.7		313		
Report Min Values:					60		11.7		5741000		692640		39.5		299		

RUN 1 : 0944 - 1151
RUN 2 : 1243 - 1450
RUN 3 : 1509 - 1713

PC - Process Codes:

01 - Changing Fuels
02 - Control Equipment Malfunction
03 - Startup
04 - Shutdown
05 - Process Down
06 - Clean Process Equipment
07 - Clean Control Equipment
08 - Normal Operation
09 - Missing

MC - Monitoring Codes:

00 - System OK
10 - Required Adjustment Not Made
11 - Excess Drift Primary Analyzer
12 - Excess Drift Ancillary Analyzer
13 - Process Down
14 - Recalibration
15 - Preventative Maintenance
16 - Primary Analyzer Malfunction
17 - Ancillary Analyzer Malfunction
18 - Data Handling System Malfunction
19 - Sample Interface Malfunction
20 - Corrective Maintenance
21 - Blowback
22 - Analyzer Under/Over Range
23 - Unit Not Sampled
25 - Quarterly Audit
55 - Subst. Value (Valid Avg.)
56 - Backup CEMS (Valid Avg.)
98 - Automatic Calibration
99 - Software Adjust

Report printed on: 08/22/12 11:53:48

TESFiler0001213

Opacity 6-Min Data Summary

Facility Name: T.E.S. Filer City Station **Location:** Filer City, MI **Source:** Boiler 1

Period: 08/21/12 09:34:00 To 08/21/12 12:00:00; **Records** = 25

Run 1

Date/Time	Process Code Opacity	Boiler 1 Opacity (%)	MC	Boiler 1 Valid Count	Boiler 1 Limit
08/21/12 09:35:34	8	2.87	00	6	10.0
08/21/12 09:41:37	8	2.86	00	6	10.0
08/21/12 09:47:35	8	2.74	00	6	10.0
08/21/12 09:53:32	8	2.99	00	6	10.0
08/21/12 09:59:35	8	2.85	00	6	10.0
08/21/12 10:05:32	8	2.86	00	6	10.0
08/21/12 10:11:34	8	2.89	00	6	10.0
08/21/12 10:17:32	8	2.83	00	6	10.0
08/21/12 10:23:35	8	2.73	00	6	10.0
08/21/12 10:29:32	8	2.69	00	6	10.0
08/21/12 10:35:35	8	2.62	00	6	10.0
08/21/12 10:41:33	8	2.59	00	6	10.0
08/21/12 10:47:35	8	2.62	00	6	10.0
08/21/12 10:53:33	8	2.58	00	6	10.0
08/21/12 10:59:36	8	2.54	00	6	10.0
08/21/12 11:05:33	8	2.53	00	6	10.0
08/21/12 11:11:36	8	2.64	00	6	10.0
08/21/12 11:17:32	8	2.65	00	6	10.0
08/21/12 11:23:36	8	2.64	00	6	10.0
08/21/12 11:29:34	8	2.64	00	6	10.0
08/21/12 11:35:37	8	2.60	00	6	10.0
08/21/12 11:41:34	8	2.60	00	6	10.0
08/21/12 11:47:36	8	2.60	00	6	10.0
08/21/12 11:53:32	8	2.57	00	6	10.0
08/21/12 11:59:35	8	2.51	00	6	10.0
	Report Average:	2.69		6	10.0
	Report Max Values:	2.99		6	10.0
	Report Min Values:	2.51		6	10.0

PC - Process Codes:

01 - Changing Fuels
02 - Control Equipment Malfunction
03 - Startup
04 - Shutdown
05 - Process Down
06 - Clean Process Equipment
07 - Clean Control Equipment
08 - Normal Operation
09 - Missing

MC - Monitoring Codes:

00 - System OK
10 - Required Adjustment Not Made
11 - Excess Drift Primary Analyzer
12 - Excess Drift Ancillary Analyzer
13 - Process Down
14 - Recalibration
15 - Preventative Maintenance
16 - Primary Analyzer Malfunction
17 - Ancillary Analyzer Malfunction
18 - Data Handling System Malfunction
19 - Sample Interface Malfunction
20 - Corrective Maintenance
21 - Blowback
22 - Analyzer Under/Over Range
23 - Unit Not Sampled
25 - Quarterly Audit
55 - Subst. Value (Valid Avg.)
56 - Backup CEMS (Valid Avg.)
98 - Automatic Calibration
99 - Software Adjust

Report printed on: 08/23/12 08:39:58

Opacity 6-Min Data Summary

Facility Name: T.E.S. Filer City Station **Location:** Filer City, MI **Source:** Boiler 1

Period: 08/21/12 12:33:00 To 08/21/12 15:00:00; Records = 25

RUN 2

Date/Time	Process Code Opacity	Boiler 1 Opacity (%)	MC	Boiler 1 Valid Count	Boiler 1 Limit
08/21/12 12:35:36	8	2.61	00	6	10.0
08/21/12 12:41:39	8	2.60	00	6	10.0
08/21/12 12:47:37	8	2.57	00	6	10.0
08/21/12 12:53:34	8	2.39	00	6	10.0
08/21/12 12:59:38	8	2.49	00	6	10.0
08/21/12 13:05:41	8	2.49	00	6	10.0
08/21/12 13:11:38	8	2.43	00	6	10.0
08/21/12 13:17:41	8	2.50	00	6	10.0
08/21/12 13:23:33	8	2.44	00	6	10.0
08/21/12 13:29:42	8	2.44	00	6	10.0
08/21/12 13:35:38	8	2.42	00	6	10.0
08/21/12 13:41:36	8	2.38	00	6	10.0
08/21/12 13:47:39	8	2.37	00	6	10.0
08/21/12 13:53:37	8	2.39	00	6	10.0
08/21/12 13:59:33	8	2.33	00	6	10.0
08/21/12 14:05:37	8	2.34	00	6	10.0
08/21/12 14:11:35	8	2.38	00	6	10.0
08/21/12 14:17:38	8	2.53	00	6	10.0
08/21/12 14:23:35	8	2.51	00	6	10.0
08/21/12 14:29:38	8	2.52	00	6	10.0
08/21/12 14:35:34	8	2.46	00	6	10.0
08/21/12 14:41:32	8	2.48	00	6	10.0
08/21/12 14:47:36	8	2.39	00	6	10.0
08/21/12 14:53:34	8	2.56	00	6	10.0
08/21/12 14:59:36	8	2.56	00	6	10.0
	Report Average:	2.46		6	10.0
	Report Max Values:	2.61		6	10.0
	Report Min Values:	2.33		6	10.0

PC - Process Codes:

01 - Changing Fuels
02 - Control Equipment Malfunction
03 - Startup
04 - Shutdown
05 - Process Down
06 - Clean Process Equipment
07 - Clean Control Equipment
08 - Normal Operation
09 - Missing

MC - Monitoring Codes:

00 - System OK
10 - Required Adjustment Not Made
11 - Excess Drift Primary Analyzer
12 - Excess Drift Ancillary Analyzer
13 - Process Down
14 - Recalibration
15 - Preventative Maintenance
16 - Primary Analyzer Malfunction
17 - Ancillary Analyzer Malfunction
18 - Data Handling System Malfunction
19 - Sample Interface Malfunction
20 - Corrective Maintenance
21 - Blowback
22 - Analyzer Under/Over Range
23 - Unit Not Sampled
25 - Quarterly Audit
55 - Subst. Value (Valid Avg.)
56 - Backup CEMS (Valid Avg.)
98 - Automatic Calibration
99 - Software Adjust

Report printed on: 08/23/12 08:40:42

Opacity 6-Min Data Summary

Facility Name: T.E.S. Filer City Station **Location:** Filer City, MI **Source:** Boiler 1

Period: 08/21/12 15:00:00 To 08/21/12 17:30:00; Records = 25

RUN 3

Date/Time	Process Code Opacity	Boiler 1 Opacity (%)	MC	Boiler 1 Valid Count	Boiler 1 Limit
08/21/12 15:05:34	8	2.53	00	6	10.0
08/21/12 15:11:37	8	2.49	00	6	10.0
08/21/12 15:17:34	8	2.41	00	6	10.0
08/21/12 15:23:37	8	2.39	00	6	10.0
08/21/12 15:29:33	8	2.41	00	6	10.0
08/21/12 15:35:37	8	2.50	00	6	10.0
08/21/12 15:41:41	8	2.46	00	6	10.0
08/21/12 15:47:37	8	2.53	00	6	10.0
08/21/12 15:53:41	8	2.48	00	6	10.0
08/21/12 15:59:37	8	2.46	00	6	10.0
08/21/12 16:05:41	8	2.40	00	6	10.0
08/21/12 16:11:38	8	2.60	00	6	10.0
08/21/12 16:17:34	8	2.57	00	6	10.0
08/21/12 16:23:38	8	2.57	00	6	10.0
08/21/12 16:29:35	8	2.56	00	6	10.0
08/21/12 16:35:38	8	2.59	00	6	10.0
08/21/12 16:41:35	8	2.54	00	6	10.0
08/21/12 16:47:36	8	2.55	00	6	10.0
08/21/12 16:53:34	8	2.64	00	6	10.0
08/21/12 16:59:38	8	2.51	00	6	10.0
08/21/12 17:05:34	8	2.50	00	6	10.0
08/21/12 17:11:38	8	2.39	00	6	10.0
08/21/12 17:17:34	8	2.43	00	6	10.0
08/21/12 17:23:38	8	2.45	00	6	10.0
08/21/12 17:29:34	8	2.55	00	6	10.0
	Report Average:	2.50		6	10.0
	Report Max Values:	2.64		6	10.0
	Report Min Values:	2.39		6	10.0

PC - Process Codes:

01 - Changing Fuels
02 - Control Equipment Malfunction
03 - Startup
04 - Shutdown
05 - Process Down
06 - Clean Process Equipment
07 - Clean Control Equipment
08 - Normal Operation
09 - Missing

MC - Monitoring Codes:

00 - System OK
10 - Required Adjustment Not Made
11 - Excess Drift Primary Analyzer
12 - Excess Drift Ancillary Analyzer
13 - Process Down
14 - Recalibration
15 - Preventative Maintenance
16 - Primary Analyzer Malfunction
17 - Ancillary Analyzer Malfunction
18 - Data Handling System Malfunction
19 - Sample Interface Malfunction
20 - Corrective Maintenance
21 - Blowback
22 - Analyzer Under/Over Range
23 - Unit Not Sampled
25 - Quarterly Audit
55 - Subst. Value (Valid Avg.)
56 - Backup CEMS (Valid Avg.)
98 - Automatic Calibration
99 - Software Adjust

Report printed on: 08/23/12 08:41:56

Attachment 7
Unit #2 Verification of Absence of Cyclonic Flow

T E S Filer City Unit 2

Particulate Emission Test

Cyclonic Flow Test

Date 8/20/2012

Traverse Point	Null Yaw Angle
1-A	4
1-B	4
1-C	1
1-D	10
1-E	15
1-F	20
2-A	11
2-B	7
2-C	0
2-D	8
2-E	9
2-F	10

Average Null Yaw Angle = 8

Cyclonic Flow is within tolerance. This sample location is allowed.

Attachment 8
Unit #2 PM Test Calculation Sheets

							MRC
PLANT	T E S Filer City		DATE	8/22/12			12.802
UNIT	2		Y value	1.00	Module #	1	
TEST#	1		DUST WT (GRAMS)	0.015			start time
NOZZLE DIA. (inches)		0.1875	O2 %	6.80			915
FLUE AREA (ft^2)		31.503	CO2 %	12.53			stop time
BAROM PRES.(in. Hg)		29.27	METERED VOLUME	72.225	cu ft		1120
STACK PRESS (in.H2O)		0.5	TOTAL TIME	120	min		
PITOT COEFFICIENT		0.832	TIME PER POINT	10	min		

POST-TEST LEAK CHECK

Start Meter Reading 555.973 Final Meter Reading 555.979

Sample Point	Δ P inches H_2O	Stack Temp. °F	Δ H inches H_2O	Meter Temp. °F	Impinger Outlet Temp. °F	O_2 %	CO_2 %	Start Meter Reading
1-A	1.45	176	4.40	76	52	6.7	12.4	483.723
1-B	1.50	179	4.50	81	48	6.6	12.5	
1-C	1.60	179	4.75	86	53	6.3	12.8	
1-D	1.45	174	4.40	86	56	6.5	12.6	
1-E	1.35	177	4.20	89	62	6.4	12.7	
1-F	1.10	178	3.48	89	59	7.4	11.3	
2-A	1.50	178	4.50	87	58	7.3	12.0	
2-B	1.35	179	4.20	88	58	6.5	12.5	
2-C	1.50	178	4.50	87	56	6.6	12.5	Final
2-D	1.50	178	4.50	88	58	6.6	12.5	Meter
2-E	1.45	178	4.40	87	56	6.6	12.6	Reading
2-F	1.20	178	3.80	85	56	6.5	12.6	555.948
AVG	1.41	177.67	4.30	85.75	56.00	6.67	12.42	

GAS VELOCITY IN FLUE (ft/sec)	73.59
GAS VOLUME IN FLUE (acfm)	139,095
GAS VOLUME IN FLUE (dscfm)	97,761
TOTAL VOLUME SAMPLED (dscf)	69.07
PARTICULATE CONC (g/dscf)	0.00022
PARTICULATE CONC (gr/dscf)	0.00335
PARTICULATE CONC (lb/hr)	2.8
PARTICULATE CONC (lbs/million btu)	0.0070
PARTICULATE CONC (lb/1000 lb gas flow)	0.006
PART. CONC (lb/1000 lb gas flow @ 50% excess air)	0.005
% EXCESS AIR	46.9
% ISOKINETIC	96.7

							MRC
PLANT	T E S Filer City		DATE	8/22/12			12.802
UNIT	2		Y value	1.00	Module #	1	
TEST#	2		DUST WT (GRAMS)	0.0013			start time
NOZZLE DIA. (inches)		0.1875	O2 %	7.15			1145
FLUE AREA (ft^2)		31.503	CO2 %	12.35			stop time
BAROM PRES.(in. Hg)		29.27	METERED VOLUME	71.472	cu ft		1351
STACK PRESS (in.H2O)		0.5	TOTAL TIME	120	min		
PITOT COEFFICIENT		0.832	TIME PER POINT	10	min		

POST-TEST LEAK CHECK

Start Meter Reading 628.456 Final Meter Reading 628.462

Sample Point	Δ P inches H_2O	Stack Temp. °F	Δ H inches H_2O	Meter Temp. °F	Impinger Outlet Temp. °F	O_2 %	CO_2 %	Start Meter Reading
1-A	1.35	177	4.20	82	62	7.0	12.4	556.947
1-B	1.45	177	4.40	84	48	6.8	12.5	
1-C	1.55	175	4.60	85	52	6.8	12.5	
1-D	1.50	178	4.50	84	54	6.7	12.5	
1-E	1.40	179	4.30	84	54	6.8	12.5	
1-F	1.15	180	3.58	84	51	6.8	12.5	
2-A	1.50	177	4.50	83	54	6.8	12.5	
2-B	1.40	178	4.30	81	60	6.6	12.6	
2-C	1.50	179	4.50	82	54	7.5	11.9	Final
2-D	1.50	182	4.50	81	54	7.1	12.2	Meter
2-E	1.30	182	4.10	81	55	7.5	11.9	Reading
2-F	1.00	179	3.20	83	55	7.7	11.8	628.419
AVG	1.38	178.58	4.22	82.83	54.42	7.01	12.32	

GAS VELOCITY IN FLUE (ft/sec)	72.94
GAS VOLUME IN FLUE (acfm)	137,867
GAS VOLUME IN FLUE (dscfm)	96,147
TOTAL VOLUME SAMPLED (dscf)	68.70
PARTICULATE CONC (g/dscf)	0.00002
PARTICULATE CONC (gr/dscf)	0.00029
PARTICULATE CONC (lb/hr)	0.2
PARTICULATE CONC (lbs/million btu)	0.0006
PARTICULATE CONC (lb/1000 lb gas flow)	0.000
PART. CONC (lb/1000 lb gas flow @ 50% excess air)	0.000
% EXCESS AIR	50.7
% ISOKINETIC	97.8

							MRC
PLANT	T E S Filer City		DATE	8/22/12			12.802
UNIT	2		Y value	1.00	Module #	1	
TEST#	3		DUST WT (GRAMS)	0.0015			start time
NOZZLE DIA. (inches)		0.1875	O2 %	6.77			1418
FLUE AREA (ft^2)		31.503	CO2 %	12.57			stop time
BAROM PRES.(in. Hg)		29.27	METERED VOLUME	71.738	cu ft		1624
STACK PRESS (in.H2O)		0.5	TOTAL TIME	120	min		
PITOT COEFFICIENT		0.832	TIME PER POINT	10	min		

POST-TEST LEAK CHECK

Start Meter Reading 701.186 Final Meter Reading 701.188

Sample Point	Δ P inches H_2O	Stack Temp. °F	Δ H inches H_2O	Meter Temp. °F	Impinger Outlet Temp. °F	O_2 %	CO_2 %	Start Meter Reading
1-A	1.60	176	4.75	79	54	6.7	12.4	629.419
1-B	1.60	176	4.75	82	49	6.2	12.8	
1-C	1.55	179	4.60	81	47	6.6	12.5	
1-D	1.40	176	4.30	82	51	6.5	12.6	
1-E	1.25	177	3.90	81	49	6.4	12.7	
1-F	0.95	174	3.10	83	48	6.2	12.9	
2-A	1.35	170	4.20	78	50	6.5	12.6	
2-B	1.40	180	4.30	82	48	7.4	12.0	
2-C	1.60	182	4.75	81	52	7.0	12.3	Final
2-D	1.65	181	4.95	82	53	6.6	12.6	Meter
2-E	1.40	178	4.30	80	50	6.5	12.7	Reading
2-F	1.05	176	3.30	82	51	7.0	12.3	701.157
AVG	1.40	177.08	4.27	81.08	50.17	6.63	12.53	

GAS VELOCITY IN FLUE (ft/sec)	73.21
GAS VOLUME IN FLUE (acfm)	138,376
GAS VOLUME IN FLUE (dscfm)	96,408
TOTAL VOLUME SAMPLED (dscf)	69.19
PARTICULATE CONC (g/dscf)	0.00002
PARTICULATE CONC (gr/dscf)	0.00033
PARTICULATE CONC (lb/hr)	0.3
PARTICULATE CONC (lbs/million btu)	0.0007
PARTICULATE CONC (lb/1000 lb gas flow)	0.001
PART. CONC (lb/1000 lb gas flow @ 50% excess air)	0.001
% EXCESS AIR	46.6
% ISOKINETIC	98.3

Attachment 9
Unit #2 PM Test Field and Laboratory Data Sheets

PLANT T E S Filer City UNIT 2 TEST NO. 1 DATE 8/22/12

WEIGHT OF PARTICULATE COLLECTED

FILTER NUMBER	FINAL WEIGHT	TARE WEIGHT	WEIGHT GAIN
1-B	2.2263	2.2263	0.0000
3-A	2.3848	2.3712	0.0136
			0.0000
			0.0000
WASH WEIGHT	29.2682	29.2668	0.0014
TOTAL			0.0150

VOLUME OF LIQUID WATER COLLECTED

	FINAL VOLUME	TARE VOLUME	LIQUID COLLECTED
IMPINGER (ml)	308	100	208
SILICA GEL (grams)	519.3	502.05	17.25
TOTAL VOLUME			225.25

PLANT T E S Filer City UNIT 2 TEST NO. 2 DATE 8/22/12

WEIGHT OF PARTICULATE COLLECTED

FILTER NUMBER	FINAL WEIGHT	TARE WEIGHT	WEIGHT GAIN
2-A	2.4058	2.4058	0.0000
1	2.5474	2.5463	0.0011
			0.0000
			0.0000
WASH WEIGHT	29.2588	29.2586	0.0002
TOTAL			0.0013

VOLUME OF LIQUID WATER COLLECTED

	FINAL VOLUME	TARE VOLUME	LIQUID COLLECTED
IMPINGER (ml)	318	100	218
SILICA GEL (grams)	519.35	502.6	16.75
TOTAL VOLUME			234.75

PLANT T E S Filer City UNIT 2 TEST NO. 3 DATE 8/22/12

WEIGHT OF PARTICULATE COLLECTED

FILTER NUMBER	FINAL WEIGHT	TARE WEIGHT	WEIGHT GAIN
4	2.2829	2.2819	0.0010
20	2.4334	2.4334	0.0000
			0.0000
			0.0000
WASH WEIGHT	49.6182	49.6177	0.0005
TOTAL			0.0015

VOLUME OF LIQUID WATER COLLECTED

	FINAL VOLUME	TARE VOLUME	LIQUID COLLECTED
IMPINGER (ml)	326	100	226
SILICA GEL (grams)	519.85	503.75	16.1
TOTAL VOLUME			242.1

PLANT T E S Filer City UNIT 2 TEST NO. 1 DATE 8-22-12

WEIGHT OF PARTICULATE COLLECTED

FILTER NUMBER	FINAL WEIGHT	TARE WEIGHT	WEIGHT GAIN
1-B	2.2263	2.2263	
3-A	2.3848	2.3712	
WASH WEIGHT (W)	29.2682	29.2668	
TOTAL			

VOLUME OF LIQUID WATER COLLECTED

	FINAL VOLUME	TARE VOLUME	LIQUID COLLECTED
IMPINGER (ml)	308	100	
SILICA GEL (grams)	519.30	502.05	
TOTAL VOLUME			

PLANT T E S Filer City UNIT 2 TEST NO. 2 DATE 8-22-12

WEIGHT OF PARTICULATE COLLECTED

FILTER NUMBER	FINAL WEIGHT	TARE WEIGHT	WEIGHT GAIN
2-A	2.4058	2.4058	
1	2.5474	2.5463	
WASH WEIGHT P	29.2588	29.2586	
TOTAL			

VOLUME OF LIQUID WATER COLLECTED

	FINAL VOLUME	TARE VOLUME	LIQUID COLLECTED
IMPINGER (ml)	318	100	
SILICA GEL (grams)	519.35	502.60	
TOTAL VOLUME			

PLANT T E S Filer City UNIT 2 TEST NO. 3 DATE 8-22-12

WEIGHT OF PARTICULATE COLLECTED

FILTER NUMBER	FINAL WEIGHT	TARE WEIGHT	WEIGHT GAIN
4	2.2829	2.2819	
20	2.4334	2.4334	
WASH WEIGHT C-3	49.6182	49.6177	
TOTAL			

VOLUME OF LIQUID WATER COLLECTED

	FINAL VOLUME	TARE VOLUME	LIQUID COLLECTED
IMPINGER (ml)	326	100	
SILICA GEL (grams)	519.85	503.75	
TOTAL VOLUME			

Attachment 10
Unit #2 TGNMO Test Calculation Sheets

TES FILER CITY

EUBOILER2

TGNMOC Instrument Performance Data

August 22, 2012

Run 1	TGNMOC
Measurement Parameter:	Propane
Instrument Span, ppm:	50
Upscale Gas Cylinder Value, ppm:	15.10
Initial Zero Gas Value, ppm:	0.04
Initial Upscale Gas Value, ppm :	15.20
Run Average, ppm:	**1.21**
Final Zero Gas Value, ppm:	0.33
Final Upscale Gas Value, ppm:	15.24
Zero Drift, percent of span:	0.7%
Upscale Drift, percent of span:	0.4%
Drift Corrected Value, ppm:	**1.03**

Run 2	TGNMOC
Measurement Parameter:	Propane
Instrument Span, ppm:	50
Upscale Gas Cylinder Value, ppm:	15.10
Initial Zero Gas Value, ppm:	0.33
Initial Upscale Gas Value, ppm :	15.24
Run Average, ppm:	**0.66**
Final Zero Gas Value, ppm:	0.50
Final Upscale Gas Value, ppm:	14.94
Zero Drift, percent of span:	1.0%
Upscale Drift, percent of span:	0.2%
Drift Corrected Value, ppm:	**0.23**

Run 3	TGNMOC
Measurement Parameter:	Propane
Instrument Span, ppm:	50
Upscale Gas Cylinder Value, ppm:	15.10
Initial Zero Gas Value, ppm:	0.50
Initial Upscale Gas Value, ppm :	14.94
Run Average, ppm:	**0.21**
Final Zero Gas Value, ppm:	0.25
Final Upscale Gas Value, ppm:	14.90
Zero Drift, percent of span:	0.5%
Upscale Drift, percent of span:	0.3%
Drift Corrected Value, ppm:	**-0.18**

The Method 25A zero and calibration drift limit is < 3% of instrument span

TGNMOC Emission Rate Supporting Field Data
TES FILER CITY
Unit 2

Client : TES Filer City
Project No. : 4100443
Source I.D.: Unit 2
Site Loc.: Outlet

Date : 8/22/2012
Run #: 1

	delta P	Sqrt delta P	delta H	Inlet Tm	Outlet Tm	Ave. Tm	Ts	Vacuum
1	1.45	1.2042	4.4		76	76.0	176	9
2	1.50	1.2247	4.5		81	81.0	179	10
3	1.60	1.2649	4.75		86	86.0	179	11
4	1.45	1.2042	4.4		86	86.0	174	10
5	1.35	1.1619	4.2		89	89.0	177	10
6	1.10	1.0488	3.48		89	89.0	178	10
7	1.50	1.2247	4.5		87	87.0	178	11
8	1.35	1.1619	4.2		88	88.0	179	11
9	1.50	1.2247	4.5		87	87.0	178	11
10	1.50	1.2247	4.5		88	88.0	178	11
11	1.45	1.2042	4.4		87	87.0	178	10
12	1.20	1.0954	3.8		85	85.0	178	9

Meter Vol. Initial =	483.723		
Meter Vol. Final =	555.948		
Total Meter Vol. =	72.225		
ave. SQRT delta P =	1.1870		
ave. delta P =	1.4125		
ave. delta H =	4.303		
ave. Tm =	85.8		
ave. Ts =	177.7		
Moisture Vol, ml =	208.0	grams=	17.2
	Initial	Final	Total
Cont. 1	100.0	308.0	208.0
Cont. 2	0.0	0.0	0.0
Cont. 3	0.0	0.0	0.0
Cont. 4	502.1	519.3	17.2

Client : TES Filer City
Project No. : 4100443
Source I.D.: Unit 2
Site Loc.: Outlet

Date : 8/22/2012
Run #: 2

	delta P	Sqrt delta P	delta H	Inlet Tm	Outlet Tm	Ave. Tm	Ts	Vacuum
1	1.35	1.1619	4.2		82	82.0	177	9
2	1.45	1.2042	4.4		84	84.0	177	9
3	1.55	1.2450	4.6		85	85.0	175	9.5
4	1.50	1.2247	4.5		84	84.0	178	9
5	1.40	1.1832	4.3		84	84.0	179	8.5
6	1.15	1.0724	3.58		84	84.0	180	7
7	1.50	1.2247	4.5		83	83.0	177	9
8	1.40	1.1832	4.3		81	81.0	178	9
9	1.50	1.2247	4.5		82	82.0	179	9.5
10	1.50	1.2247	4.5		81	81.0	182	9.5
11	1.30	1.1402	4.1		81	81.0	182	8
12	1.00	1.0000	3.2		83	83.0	179	6.5

Meter Vol. Initial =	556.947		
Meter Vol. Final =	628.419		
Total Meter Vol. =	71.472		
ave. SQRT delta P =	1.1741		
ave. delta P =	1.3833		
ave. delta H =	4.223		
ave. Tm =	82.8		
ave. Ts =	178.6		
Moisture Vol, ml =	218.0	grams=	16.8
	Initial	Final	Total
Cont. 1	100.0	318.0	218.0
Cont. 2	0.0	0.0	0.0
Cont. 3	0.0	0.0	0.0
Cont. 4	502.6	519.4	16.8

Client : TES Filer City
Project No. : 4100443
Source I.D.: Unit 2
Site Loc.: Outlet

Date : 8/22/2012
Run #: 3

	delta P	Sqrt delta P	delta H	Inlet Tm	Outlet Tm	Ave. Tm	Ts	Vacuum
1	1.60	1.2649	4.75		79	79.0	176	7.5
2	1.60	1.2649	4.75		82	82.0	176	7.5
3	1.55	1.2450	4.6		81	81.0	179	7.5
4	1.40	1.1832	4.3		82	82.0	176	7
5	1.25	1.1180	3.9		81	81.0	177	6.5
6	0.95	0.9747	3.1		83	83.0	174	5.5
7	1.35	1.1619	4.2		78	78.0	170	7
8	1.40	1.1832	4.3		82	82.0	180	7.5
9	1.60	1.2649	4.75		81	81.0	182	8
10	1.65	1.2845	4.95		82	82.0	181	9
11	1.40	1.1832	4.3		80	80.0	178	8
12	1.05	1.0247	3.3		82	82.0	176	6

Meter Vol. Initial =	629.419		
Meter Vol. Final =	701.157		
Total Meter Vol. =	71.738		
ave. SQRT delta P =	1.1794		
ave. delta P =	1.4000		
ave. delta H =	4.267		
ave. Tm =	81.1		
ave. Ts =	177.1		
Moisture Vol, ml =	226.0	grams=	16.1
	Initial	Final	Total
Cont. 1	100.0	326.0	226.0
Cont. 2	0.0	0.0	0.0
Cont. 3	0.0	0.0	0.0
Cont. 4	503.8	519.9	16.1

Unit 2, Run 1

DATE	TIME	TGNMOC as C3
Start Run 1		
8/22/2012	9:15:23 AM	1.78
8/22/2012	9:16:23 AM	1.34
8/22/2012	9:17:23 AM	1.62
8/22/2012	9:18:23 AM	1.19
8/22/2012	9:19:23 AM	1.19
8/22/2012	9:20:23 AM	1.03
8/22/2012	9:21:23 AM	1.04
8/22/2012	9:22:23 AM	1.03
8/22/2012	9:23:23 AM	0.75
8/22/2012	9:24:23 AM	0.89
8/22/2012	9:25:23 AM	1.62
8/22/2012	9:26:23 AM	1.04
8/22/2012	9:27:23 AM	1.04
8/22/2012	9:28:23 AM	1.04
8/22/2012	9:29:23 AM	1.34
8/22/2012	9:30:23 AM	0.91
8/22/2012	9:31:23 AM	1.03
8/22/2012	9:32:23 AM	0.9
8/22/2012	9:33:23 AM	0.9
8/22/2012	9:34:23 AM	0.9
8/22/2012	9:35:23 AM	0.9
8/22/2012	9:36:23 AM	0.89
8/22/2012	9:37:23 AM	0.75
8/22/2012	9:38:23 AM	0.55
8/22/2012	9:39:23 AM	0.89
8/22/2012	9:40:23 AM	0.41
8/22/2012	9:41:23 AM	0.56
8/22/2012	9:42:23 AM	0.89
8/22/2012	9:43:23 AM	0.41
8/22/2012	9:44:23 AM	0.73
8/22/2012	9:45:23 AM	0.74
8/22/2012	9:46:23 AM	0.56
8/22/2012	9:47:23 AM	0.9
8/22/2012	9:48:23 AM	0.89
8/22/2012	9:49:23 AM	0.75
8/22/2012	9:50:23 AM	0.75
8/22/2012	9:51:23 AM	1.04
8/22/2012	9:52:23 AM	0.9
8/22/2012	9:53:23 AM	1.04
8/22/2012	9:54:23 AM	0.74
8/22/2012	9:55:23 AM	0.75
8/22/2012	9:56:23 AM	0.9
8/22/2012	9:57:23 AM	0.56
8/22/2012	9:58:23 AM	0.9
8/22/2012	9:59:23 AM	0.41
8/22/2012	10:00:23 AM	0.75
8/22/2012	10:01:23 AM	0.9
8/22/2012	10:02:23 AM	0.4
8/22/2012	10:03:23 AM	0.56
8/22/2012	10:04:23 AM	0.41
8/22/2012	10:05:23 AM	0.74
8/22/2012	10:06:23 AM	0.56
8/22/2012	10:07:23 AM	0.75
8/22/2012	10:08:23 AM	0.56

8/22/2012	10:09:23 AM	0.56	
8/22/2012	10:10:23 AM	0.75	
8/22/2012	10:11:23 AM	0.4	
8/22/2012	10:12:23 AM	0.75	
8/22/2012	10:13:23 AM	0.56	
8/22/2012	10:14:23 AM	0.56	
8/22/2012	10:15:23 AM	0.75	Port Change
8/22/2012	10:16:23 AM	0.75	Port Change
8/22/2012	10:17:23 AM	0.41	Port Change
8/22/2012	10:18:23 AM	1.34	Port Change
8/22/2012	10:19:23 AM	1.2	Port Change
8/22/2012	10:20:23 AM	1.04	
8/22/2012	10:21:23 AM	0.75	
8/22/2012	10:22:23 AM	0.56	
8/22/2012	10:23:23 AM	0.57	
8/22/2012	10:24:23 AM	0.56	
8/22/2012	10:25:23 AM	0.55	
8/22/2012	10:26:23 AM	0.56	
8/22/2012	10:27:23 AM	0.75	
8/22/2012	10:28:23 AM	0.41	
8/22/2012	10:29:23 AM	0.55	
8/22/2012	10:30:23 AM	0.56	
8/22/2012	10:31:23 AM	1.04	
8/22/2012	10:32:23 AM	1.04	
8/22/2012	10:33:23 AM	1.19	
8/22/2012	10:34:23 AM	1.62	
8/22/2012	10:35:23 AM	2.09	
8/22/2012	10:36:23 AM	-0.03	
8/22/2012	10:37:23 AM	-0.03	
8/22/2012	10:38:23 AM	1.48	
8/22/2012	10:39:23 AM	2.69	
8/22/2012	10:40:23 AM	2.62	
8/22/2012	10:41:23 AM	2.99	
8/22/2012	10:42:23 AM	3.89	
8/22/2012	10:43:23 AM	3.48	
8/22/2012	10:44:23 AM	3.15	
8/22/2012	10:45:23 AM	2.99	
8/22/2012	10:46:23 AM	2.77	
8/22/2012	10:47:23 AM	2.79	
8/22/2012	10:48:23 AM	2.89	
8/22/2012	10:49:23 AM	2.98	
8/22/2012	10:50:23 AM	3.15	
8/22/2012	10:51:23 AM	2.68	
8/22/2012	10:52:23 AM	2.24	
8/22/2012	10:53:23 AM	2.39	
8/22/2012	10:54:23 AM	2.53	
8/22/2012	10:55:23 AM	2.1	
8/22/2012	10:56:23 AM	2.1	
8/22/2012	10:57:23 AM	1.49	
8/22/2012	10:58:23 AM	1.5	
8/22/2012	10:59:23 AM	1.77	
8/22/2012	11:00:23 AM	1.78	
8/22/2012	11:01:23 AM	1.49	
8/22/2012	11:02:23 AM	1.64	
8/22/2012	11:03:23 AM	1.63	
8/22/2012	11:04:23 AM	1.49	
8/22/2012	11:05:23 AM	1.33	
8/22/2012	11:06:23 AM	1.04	

8/22/2012	11:07:23 AM	1.34	
8/22/2012	11:08:23 AM	0.91	
8/22/2012	11:09:23 AM	1.78	
8/22/2012	11:10:23 AM	1.33	
8/22/2012	11:11:23 AM	1.05	
8/22/2012	11:12:23 AM	1.19	
8/22/2012	11:13:23 AM	1.04	
8/22/2012	11:14:23 AM	1.05	
8/22/2012	11:15:23 AM	1.2	
8/22/2012	11:16:23 AM	1.04	
8/22/2012	11:17:23 AM	0.9	
8/22/2012	11:18:23 AM	0.75	
8/22/2012	11:19:23 AM	0.75	
Average, Run 1		**1.21**	
8/22/2012	11:20:23 AM	0.9	
8/22/2012	11:21:23 AM	0.91	
8/22/2012	11:22:23 AM	0.75	
8/22/2012	11:23:23 AM	1.21	
8/22/2012	11:24:23 AM	0.75	
8/22/2012	11:25:23 AM	0.75	
8/22/2012	11:26:23 AM	0.75	
8/22/2012	**11:27:23 AM**	**15.24**	**Upscale Ga:**
8/22/2012	11:28:23 AM	36.5	
8/22/2012	11:29:23 AM	21.55	
8/22/2012	11:30:23 AM	3.16	
8/22/2012	11:31:23 AM	35.63	
8/22/2012	11:32:23 AM	35.28	
8/22/2012	11:33:23 AM	33.91	
8/22/2012	11:34:23 AM	25.3	
8/22/2012	11:35:23 AM	37.7	
8/22/2012	11:36:23 AM	38.61	
8/22/2012	11:37:23 AM	40.38	
8/22/2012	11:38:23 AM	2.38	
8/22/2012	11:39:23 AM	1.09	
8/22/2012	11:40:23 AM	**0.33**	**Zero Gas**
8/22/2012	11:41:23 AM	4.04	
8/22/2012	11:42:23 AM	44.71	
8/22/2012	11:43:23 AM	44.7	

Unit 2, Run 2

DATE	TIME	TGNMOC as C3
Start Run 2		
8/22/2012	11:45:23 AM	2.1
8/22/2012	11:46:23 AM	2.08
8/22/2012	11:47:23 AM	1.34
8/22/2012	11:48:23 AM	1.19
8/22/2012	11:49:18 AM	3.59
8/22/2012	11:50:17 AM	2.98
8/22/2012	11:51:17 AM	2.83
8/22/2012	11:52:17 AM	2.39
8/22/2012	11:53:17 AM	2.39
8/22/2012	11:54:17 AM	2.1
8/22/2012	11:55:17 AM	1.94
8/22/2012	11:56:17 AM	1.49
8/22/2012	11:57:17 AM	2.08
8/22/2012	11:58:17 AM	1.49
8/22/2012	11:59:17 AM	1.48
8/22/2012	12:00:17 PM	1.34
8/22/2012	12:01:17 PM	1.04
8/22/2012	12:02:17 PM	1.49
8/22/2012	12:03:17 PM	1.05
8/22/2012	12:04:17 PM	1.19
8/22/2012	12:05:17 PM	1.19
8/22/2012	12:06:17 PM	1.2
8/22/2012	12:07:17 PM	0.9
8/22/2012	12:08:17 PM	0.9
8/22/2012	12:09:17 PM	0.75
8/22/2012	12:10:17 PM	0.9
8/22/2012	12:11:17 PM	0.56
8/22/2012	12:12:17 PM	0.56
8/22/2012	12:13:17 PM	0.56
8/22/2012	12:14:17 PM	0.56
8/22/2012	12:15:17 PM	0.56
8/22/2012	12:16:17 PM	-0.02
8/22/2012	12:17:17 PM	0.75
8/22/2012	12:18:17 PM	0.56
8/22/2012	12:19:17 PM	0.74
8/22/2012	12:20:17 PM	0.75
8/22/2012	12:21:17 PM	0.75
8/22/2012	12:22:17 PM	0.76
8/22/2012	12:23:17 PM	0.75
8/22/2012	12:24:17 PM	0.41
8/22/2012	12:25:17 PM	0.74
8/22/2012	12:26:17 PM	-0.03
8/22/2012	12:27:17 PM	0.91
8/22/2012	12:28:17 PM	0.55
8/22/2012	12:29:17 PM	0.56

8/22/2012	12:30:17 PM	0.56	
8/22/2012	12:31:17 PM	0.55	
8/22/2012	12:32:17 PM	0.12	
8/22/2012	12:33:17 PM	0.56	
8/22/2012	12:34:17 PM	0.41	
8/22/2012	12:35:17 PM	0.56	
8/22/2012	12:36:17 PM	0.41	
8/22/2012	12:37:17 PM	0.56	
8/22/2012	12:38:17 PM	0.27	
8/22/2012	12:39:17 PM	-0.03	
8/22/2012	12:40:17 PM	0.27	
8/22/2012	12:41:17 PM	0.27	
8/22/2012	12:42:17 PM	0.57	
8/22/2012	12:43:17 PM	0.76	
8/22/2012	12:44:17 PM	0.75	
8/22/2012	12:45:17 PM	0.56	Port Chang
8/22/2012	12:46:17 PM	0.56	Port Chang
8/22/2012	12:47:17 PM	-0.03	Port Chang
8/22/2012	12:48:17 PM	0.41	Port Chang
8/22/2012	12:49:17 PM	0.75	Port Chang
8/22/2012	12:50:17 PM	0.57	Port Chang
8/22/2012	12:51:17 PM	0.42	Port Chang
8/22/2012	12:52:17 PM	0.56	Port Chang
8/22/2012	12:53:17 PM	0.57	
8/22/2012	12:54:17 PM	0.56	
8/22/2012	12:55:17 PM	0.12	
8/22/2012	12:56:17 PM	0.27	
8/22/2012	12:57:17 PM	0.41	
8/22/2012	12:58:17 PM	0.28	
8/22/2012	12:59:17 PM	0.41	
8/22/2012	1:00:17 PM	0.56	
8/22/2012	1:01:17 PM	0.42	
8/22/2012	1:02:17 PM	0.41	
8/22/2012	1:03:17 PM	0.11	
8/22/2012	1:04:17 PM	0.56	
8/22/2012	1:05:17 PM	0.56	
8/22/2012	1:06:17 PM	0.9	
8/22/2012	1:07:17 PM	0.75	
8/22/2012	1:08:17 PM	0.57	
8/22/2012	1:09:17 PM	-0.03	
8/22/2012	1:10:17 PM	0.12	
8/22/2012	1:11:17 PM	-0.03	
8/22/2012	1:12:17 PM	0.56	
8/22/2012	1:13:17 PM	0.74	
8/22/2012	1:14:17 PM	0.12	
8/22/2012	1:15:17 PM	-0.02	
8/22/2012	1:16:17 PM	0.75	
8/22/2012	1:17:17 PM	0.56	
8/22/2012	1:18:17 PM	0.42	

8/22/2012	1:19:17 PM	0.42	
8/22/2012	1:20:17 PM	-0.02	
8/22/2012	1:21:17 PM	0.41	
8/22/2012	1:22:17 PM	-0.03	
8/22/2012	1:23:17 PM	-0.03	
8/22/2012	1:24:17 PM	0.4	
8/22/2012	1:25:17 PM	0.27	
8/22/2012	1:26:17 PM	-0.03	
8/22/2012	1:27:17 PM	0.27	
8/22/2012	1:28:17 PM	-0.02	
8/22/2012	1:29:17 PM	-0.02	
8/22/2012	1:30:17 PM	-0.04	
8/22/2012	1:31:17 PM	0.55	
8/22/2012	1:32:17 PM	-0.03	
8/22/2012	1:33:17 PM	-0.03	
8/22/2012	1:34:17 PM	0.26	
8/22/2012	1:35:17 PM	0.4	
8/22/2012	1:36:17 PM	0.75	
8/22/2012	1:37:17 PM	-0.04	
8/22/2012	1:38:17 PM	-0.03	
8/22/2012	1:39:17 PM	0.41	
8/22/2012	1:40:17 PM	0.11	
8/22/2012	1:41:17 PM	-0.03	
8/22/2012	1:42:17 PM	0.74	
8/22/2012	1:43:17 PM	0.56	
8/22/2012	1:44:17 PM	0.57	
8/22/2012	1:45:17 PM	-0.03	
8/22/2012	1:46:17 PM	0.75	
8/22/2012	1:47:17 PM	-0.02	
8/22/2012	1:48:17 PM	-0.02	
8/22/2012	1:49:17 PM	0.55	
8/22/2012	1:50:17 PM	-0.04	
8/22/2012	1:51:17 PM	-0.03	
8/22/2012	1:52:17 PM	0.11	
Average, Run 2		**0.66**	
8/22/2012	1:53:17 PM	-0.04	
8/22/2012	1:54:17 PM	0.11	
8/22/2012	1:55:17 PM	-0.03	
8/22/2012	1:56:17 PM	36.2	
8/22/2012	**1:57:17 PM**	**14.94**	**Upscale Ga**
8/22/2012	1:58:17 PM	38.31	
8/22/2012	1:59:17 PM	26.22	
8/22/2012	2:00:17 PM	37.41	
8/22/2012	2:01:17 PM	40.07	
8/22/2012	2:02:17 PM	2.68	
8/22/2012	2:03:17 PM	2.23	
8/22/2012	2:04:17 PM	1.48	
8/22/2012	2:05:17 PM	1.48	
8/22/2012	**2:06:17 PM**	**0.50**	**Zero Gas**

Unit 2, Run 3

DATE	TIME	TGNMOC
Start Run 3		as C3
8/22/2012	2:09:45 PM	2.38
8/22/2012	2:10:45 PM	2.53
8/22/2012	2:11:45 PM	2.53
8/22/2012	2:12:45 PM	3.16
8/22/2012	2:13:45 PM	3.3
8/22/2012	2:14:45 PM	3.3
8/22/2012	2:15:45 PM	3.31
8/22/2012	2:16:45 PM	3.3
8/22/2012	2:17:45 PM	3.15
8/22/2012	2:18:45 PM	2.68
8/22/2012	2:19:45 PM	2.23
8/22/2012	2:20:45 PM	1.94
8/22/2012	2:21:45 PM	-0.03
8/22/2012	2:22:45 PM	0.9
8/22/2012	2:23:45 PM	0.9
8/22/2012	2:24:45 PM	1.04
8/22/2012	2:25:45 PM	0.56
8/22/2012	2:26:45 PM	0.57
8/22/2012	2:27:45 PM	0.41
8/22/2012	2:28:45 PM	0.57
8/22/2012	2:29:45 PM	-0.03
8/22/2012	2:30:45 PM	0.56
8/22/2012	2:31:45 PM	0.56
8/22/2012	2:32:45 PM	0.41
8/22/2012	2:33:45 PM	-0.03
8/22/2012	2:34:45 PM	-0.02
8/22/2012	2:35:45 PM	-0.03
8/22/2012	2:36:45 PM	0.56
8/22/2012	2:37:45 PM	-0.03
8/22/2012	2:38:45 PM	-0.04
8/22/2012	2:39:45 PM	-0.03
8/22/2012	2:40:45 PM	-0.04
8/22/2012	2:41:45 PM	-0.03
8/22/2012	2:42:45 PM	-0.03
8/22/2012	2:43:45 PM	0.27
8/22/2012	2:44:45 PM	-0.02
8/22/2012	2:45:45 PM	-0.03
8/22/2012	2:46:45 PM	-0.03
8/22/2012	2:47:45 PM	-0.03
8/22/2012	2:48:45 PM	-0.03
8/22/2012	2:49:45 PM	-0.03
8/22/2012	2:50:45 PM	-0.01
8/22/2012	2:51:45 PM	-0.03
8/22/2012	2:52:45 PM	-0.03
8/22/2012	2:53:45 PM	0.75
8/22/2012	2:54:45 PM	0.12
8/22/2012	2:55:45 PM	0.27
8/22/2012	2:56:45 PM	0.27
8/22/2012	2:57:45 PM	-0.02
8/22/2012	2:58:45 PM	-0.03
8/22/2012	2:59:45 PM	-0.02

8/22/2012	3:00:45 PM	-0.03	
8/22/2012	3:01:45 PM	-0.03	
8/22/2012	3:02:45 PM	-0.03	
8/22/2012	3:03:45 PM	0.11	
8/22/2012	3:04:45 PM	0.28	
8/22/2012	3:05:45 PM	-0.03	
8/22/2012	3:06:45 PM	-0.03	
8/22/2012	3:07:45 PM	-0.02	
8/22/2012	3:08:45 PM	0.57	
8/22/2012	3:09:45 PM	-0.03	
8/22/2012	3:10:45 PM	0.56	
8/22/2012	3:11:45 PM	0.57	
8/22/2012	3:12:45 PM	0.26	
8/22/2012	3:13:45 PM	0.11	Port Chang
8/22/2012	3:14:45 PM	0.42	Port Chang
8/22/2012	3:15:45 PM	0.57	Port Chang
8/22/2012	3:16:45 PM	0.41	
8/22/2012	3:17:45 PM	0.43	
8/22/2012	3:18:45 PM	-0.02	
8/22/2012	3:19:45 PM	0.13	
8/22/2012	3:20:45 PM	0.42	
8/22/2012	3:21:45 PM	-0.02	
8/22/2012	3:22:45 PM	-0.03	
8/22/2012	3:23:45 PM	-0.02	
8/22/2012	3:24:45 PM	-0.03	
8/22/2012	3:25:45 PM	0.41	
8/22/2012	3:26:45 PM	-0.03	
8/22/2012	3:27:45 PM	-0.02	
8/22/2012	3:28:45 PM	-0.02	
8/22/2012	3:29:45 PM	-0.02	
8/22/2012	3:30:45 PM	-0.03	
8/22/2012	3:31:45 PM	0.12	
8/22/2012	3:32:45 PM	-0.02	
8/22/2012	3:33:45 PM	-0.03	
8/22/2012	3:34:45 PM	-0.03	
8/22/2012	3:35:45 PM	0.26	
8/22/2012	3:36:45 PM	0.42	
8/22/2012	3:37:45 PM	-0.02	
8/22/2012	3:38:45 PM	-0.02	
8/22/2012	3:39:45 PM	-0.02	
8/22/2012	3:40:45 PM	-0.02	
8/22/2012	3:41:45 PM	-0.03	
8/22/2012	3:42:45 PM	-0.03	
8/22/2012	3:43:45 PM	-0.03	
8/22/2012	3:44:45 PM	-0.04	
8/22/2012	3:45:45 PM	-0.03	
8/22/2012	3:46:45 PM	-0.02	
8/22/2012	3:47:45 PM	-0.03	
8/22/2012	3:48:45 PM	-0.03	
8/22/2012	3:49:45 PM	-0.02	
8/22/2012	3:50:45 PM	-0.03	
8/22/2012	3:51:45 PM	-0.03	
8/22/2012	3:52:45 PM	-0.03	
8/22/2012	3:53:45 PM	-0.03	

8/22/2012	3:54:45 PM	-0.04	
8/22/2012	3:55:45 PM	-0.03	
8/22/2012	3:56:45 PM	-0.02	
8/22/2012	3:57:45 PM	0.41	
8/22/2012	3:58:45 PM	-0.02	
8/22/2012	3:59:45 PM	-0.03	
8/22/2012	4:00:45 PM	-0.03	
8/22/2012	4:01:45 PM	-0.03	
8/22/2012	4:02:45 PM	-0.02	
8/22/2012	4:03:45 PM	0.42	
8/22/2012	4:04:45 PM	-0.03	
8/22/2012	4:05:45 PM	-0.03	
8/22/2012	4:06:45 PM	-0.02	
8/22/2012	4:07:45 PM	-0.03	
8/22/2012	4:08:45 PM	-0.02	
8/22/2012	4:09:45 PM	-0.03	
8/22/2012	4:10:45 PM	0.27	
8/22/2012	4:11:45 PM	-0.02	
8/22/2012	4:12:45 PM	0.41	
8/22/2012	4:13:45 PM	0.75	
8/22/2012	4:14:45 PM	1.05	
8/22/2012	4:15:45 PM	1.05	
8/22/2012	4:16:45 PM	1.05	
8/22/2012	4:17:45 PM	0.74	
8/22/2012	4:18:45 PM	-0.04	
8/22/2012	4:19:45 PM	0.9	
8/22/2012	4:20:45 PM	0.9	
8/22/2012	4:21:45 PM	0.57	
8/22/2012	4:22:45 PM	0.75	
8/22/2012	4:23:45 PM	0.75	
8/22/2012	4:24:45 PM	1.04	
Average, Run 3		**0.21**	
8/22/2012	4:25:45 PM	0.55	
8/22/2012	4:26:45 PM	0.9	
8/22/2012	4:27:45 PM	0.9	
8/22/2012	4:28:45 PM	1.34	
8/22/2012	**4:29:45 PM**	**0.25**	**Zero Gas**
8/22/2012	4:30:45 PM	6.13	
8/22/2012	4:31:45 PM	15.1	
8/22/2012	4:32:45 PM	14.33	
8/22/2012	4:33:45 PM	18.84	
8/22/2012	4:34:45 PM	13.9	
8/22/2012	4:35:45 PM	11.82	
8/22/2012	4:36:45 PM	34.83	
8/22/2012	4:37:45 PM	37.88	
8/22/2012	4:38:45 PM	40.07	
8/22/2012	4:39:45 PM	41.12	
8/22/2012	4:40:45 PM	41.72	
8/22/2012	**4:41:45 PM**	**14.90**	**Upscale Ga**
8/22/2012	4:42:45 PM	41.58	
8/22/2012	4:43:45 PM	3.45	
8/22/2012	4:44:45 PM	2.09	
8/22/2012	4:45:45 PM	1.2	

Attachment 11
Unit #2 Operating Data

P75 Hourly D Summary

Facility Name: T.E.S. Filer City Station **Location:** Filer City, MI **Source:** Boiler 2

Period: 08/22/12 00:00:00 To 08/22/12 23:59:59; **Records** = 24

Note: All averages are bias adjusted where applicable.

Date	Hr	PC	Oper Time	Load Bin	Blr 2 Op minutes	Blr 2 CO2 %	MODC	Blr 2 Stk Flow scfh	MC	Blr 2 CO2 scf	MC	Blr 2 CO2 tons/hr	MC	Blr 2 Steam k-lbs	MC	
08/22/12	0	8	1.00	10	60	11.3	01	6476000	00	731788	00	41.7	00	308	00	
08/22/12	1	8	1.00	10	60	11.3	01	6390000	00	722070	00	41.2	00	305	00	
08/22/12	2	8	1.00	10	60	11.2	01	6487000	00	726544	00	41.4	00	307	00	
08/22/12	3	8	1.00	10	60	11.4	01	6392000	00	728688	00	41.5	00	308	00	
08/22/12	4	8	1.00	10	60	11.2	01	6546000	00	733152	00	41.8	00	311	00	
08/22/12	5	8	1.00	10	60	11.3	01	6620000	00	748060	00	42.6	00	312	00	
08/22/12	6	8	1.00	10	60	11.3	01	6371000	00	719923	00	41.0	00	306	00	
08/22/12	7	8	1.00	10	60	11.2	01	6463000	00	723856	00	41.3	00	310	00	
08/22/12	8	8	1.00	10	60	11.4	01	6386000	00	728004	00	41.5	00	311	00	
08/22/12	9	8	1.00	10	60	11.3	01	6247000	00	705911	00	40.2	00	311	00	
08/22/12	10	8	1.00	10	60	11.1	01	6697000	00	743367	00	42.4	00	308	00	RUN 1
08/22/12	11	8	1.00	10	60	11.3	01	5526000	00	624438	00	35.6	00	309	00	
08/22/12	12	8	1.00	10	60	11.3	01	5656000	00	639128	00	36.4	00	309	00	
08/22/12	13	8	1.00	10	60	10.9	01	6328000	00	689752	00	39.3	00	305	00	RUN 2
08/22/12	14	8	1.00	10	60	11.3	01	6062000	00	685006	00	39.0	00	309	00	
08/22/12	15	8	1.00	10	60	11.1	01	6581000	00	730491	00	41.6	00	309	00	RUN 3
08/22/12	16	8	1.00	10	60	11.3	01	6454000	00	729302	00	41.6	00	307	00	
08/22/12	17	8	1.00	10	60	11.2	01	6459000	00	723408	00	41.2	00	305	00	
08/22/12	18	8	1.00	10	60	11.3	01	6445000	00	728285	00	41.5	00	309	00	
08/22/12	19	8	1.00	10	60	11.2	01	6476000	00	725312	00	41.3	00	307	00	
08/22/12	20	8	1.00	10	60	11.4	01	6625000	00	755250	00	43.0	00	309	00	
08/22/12	21	8	1.00	10	60	11.1	01	6411000	00	711621	00	40.6	00	302	00	
08/22/12	22	8	1.00	10	60	11.3	01	6359000	00	718567	00	41.0	00	304	00	
08/22/12	23	8	1.00	10	60	11.1	01	6599000	00	732489	00	41.8	00	309	00	
Report Average:					60	11.2		6377333		716851		40.9		308		
Report Max Values:					60	11.4		6697000		755250		43.0		312		
Report Min Values:					60	10.9		5526000		624438		35.6		302		

RUN 1: 0915 - 1120
RUN 2: 1145 - 1351
RUN 3: 1418 - 1624

PC - Process Codes:

01 - Changing Fuels
02 - Control Equipment Malfunction
03 - Startup
04 - Shutdown
05 - Process Down
06 - Clean Process Equipment
07 - Clean Control Equipment
08 - Normal Operation
09 - Missing

MC - Monitoring Codes:

00 - System OK
10 - Required Adjustment Not Made
11 - Excess Drift Primary Analyzer
12 - Excess Drift Ancillary Analyzer
13 - Process Down
14 - Recalibration
15 - Preventative Maintenance
16 - Primary Analyzer Malfunction
17 - Ancillary Analyzer Malfunction
18 - Data Handling System Malfunction
19 - Sample Interface Malfunction
20 - Corrective Maintenance
21 - Blowback
22 - Analyzer Under/Over Range
23 - Unit Not Sampled
25 - Quarterly Audit
55 - Subst. Value (Valid Avg.)
56 - Backup CEMS (Valid Avg.)
98 - Automatic Calibration
99 - Software Adjust

Report printed on: 08/23/12 08:47:34

Opacity 6-Min Data Summary

Facility Name: T.E.S. Filer City Station Location: Filer City, MI Source: Boiler 2

Period: 08/22/12 09:05:00 To 08/22/12 11:30:00; Records = 25

Run 1

Date/Time	Process Code Opacity	Boiler 2 Opacity (%)	MC	Boiler 2 Valid Count	Boiler 2 Limit
08/22/12 09:05:35	8	0.70	00	6	10.0
08/22/12 09:11:31	8	0.70	00	6	10.0
08/22/12 09:17:33	8	0.74	00	6	10.0
08/22/12 09:23:36	8	0.75	00	6	10.0
08/22/12 09:29:39	8	0.80	00	6	10.0
08/22/12 09:35:34	8	0.73	00	6	10.0
08/22/12 09:41:30	8	0.75	00	6	10.0
08/22/12 09:47:38	8	0.80	00	6	10.0
08/22/12 09:53:35	8	0.81	00	6	10.0
08/22/12 09:59:36	8	0.90	00	6	10.0
08/22/12 10:05:39	8	0.83	00	6	10.0
08/22/12 10:11:35	8	0.83	00	6	10.0
08/22/12 10:17:37	8	0.81	00	6	10.0
08/22/12 10:23:38	8	0.78	00	6	10.0
08/22/12 10:29:35	8	0.78	00	6	10.0
08/22/12 10:35:38	8	0.80	00	6	10.0
08/22/12 10:41:39	8	0.75	00	6	10.0
08/22/12 10:47:35	8	0.78	00	6	10.0
08/22/12 10:53:37	8	0.83	00	6	10.0
08/22/12 10:59:40	8	0.79	00	6	10.0
08/22/12 11:05:36	8	0.78	00	6	10.0
08/22/12 11:11:37	8	0.72	00	6	10.0
08/22/12 11:17:40	8	0.70	00	6	10.0
08/22/12 11:23:35	8	0.67	00	6	10.0
08/22/12 11:29:38	8	0.67	00	6	10.0
	Report Average:	0.77		6	10.0
	Report Max Values:	0.90		6	10.0
	Report Min Values:	0.67		6	10.0

PC - Process Codes:

01 - Changing Fuels
02 - Control Equipment Malfunction
03 - Startup
04 - Shutdown
05 - Process Down
06 - Clean Process Equipment
07 - Clean Control Equipment
08 - Normal Operation
09 - Missing

MC - Monitoring Codes:

00 - System OK
10 - Required Adjustment Not Made
11 - Excess Drift Primary Analyzer
12 - Excess Drift Ancillary Analyzer
13 - Process Down
14 - Recalibration
15 - Preventative Maintenance
16 - Primary Analyzer Malfunction
17 - Ancillary Analyzer Malfunction
18 - Data Handling System Malfunction
19 - Sample Interface Malfunction
20 - Corrective Maintenance
21 - Blowback
22 - Analyzer Under/Over Range
23 - Unit Not Sampled
25 - Quarterly Audit
55 - Subst. Value (Valid Avg.)
56 - Backup CEMS (Valid Avg.)
98 - Automatic Calibration
99 - Software Adjust

Report printed on: 08/23/12 08:35:31

TESFiler0001242

Opacity 6-Min Data Summary

Facility Name: T.E.S. Filer City Station Location: Filer City, MI Source: Boiler 2

Period: 08/22/12 11:35:00 To 08/22/12 14:00:00; Records = 25

RUN 2

Date/Time	Process Code Opacity	Boiler 2 Opacity (%)	MC	Boiler 2 Valid Count	Boiler 2 Limit
08/22/12 11:35:40	8	0.69	00	6	10.0
08/22/12 11:41:36	8	0.75	00	6	10.0
08/22/12 11:47:37	8	0.71	00	6	10.0
08/22/12 11:53:40	8	0.67	00	6	10.0
08/22/12 11:59:39	8	0.68	00	6	10.0
08/22/12 12:05:35	8	0.70	00	6	10.0
08/22/12 12:11:38	8	0.69	00	6	10.0
08/22/12 12:17:39	8	0.71	00	6	10.0
08/22/12 12:23:35	8	0.69	00	6	10.0
08/22/12 12:29:37	8	0.64	00	6	10.0
08/22/12 12:35:33	8	0.71	00	6	10.0
08/22/12 12:41:41	8	0.71	00	6	10.0
08/22/12 12:47:30	8	0.69	00	6	10.0
08/22/12 12:53:33	8	0.65	00	6	10.0
08/22/12 12:59:36	8	0.65	00	6	10.0
08/22/12 13:05:31	8	0.64	00	6	10.0
08/22/12 13:11:34	8	0.64	00	6	10.0
08/22/12 13:17:35	8	0.66	00	6	10.0
08/22/12 13:23:31	8	0.68	00	6	10.0
08/22/12 13:29:39	8	0.68	00	6	10.0
08/22/12 13:35:36	8	0.70	00	6	10.0
08/22/12 13:41:37	8	0.70	00	6	10.0
08/22/12 13:47:35	8	0.75	00	6	10.0
08/22/12 13:53:36	8	0.75	00	6	10.0
08/22/12 13:59:32	8	0.76	00	6	10.0
	Report Average:	0.69		6	10.0
	Report Max Values:	0.76		6	10.0
	Report Min Values:	0.64		6	10.0

PC - Process Codes:

01 - Changing Fuels
02 - Control Equipment Malfunction
03 - Startup
04 - Shutdown
05 - Process Down
06 - Clean Process Equipment
07 - Clean Control Equipment
08 - Normal Operation
09 - Missing

MC - Monitoring Codes:

00 - System OK
10 - Required Adjustment Not Made
11 - Excess Drift Primary Analyzer
12 - Excess Drift Ancillary Analyzer
13 - Process Down
14 - Recalibration
15 - Preventative Maintenance
16 - Primary Analyzer Malfunction
17 - Ancillary Analyzer Malfunction
18 - Data Handling System Malfunction
19 - Sample Interface Malfunction
20 - Corrective Maintenance
21 - Blowback
22 - Analyzer Under/Over Range
23 - Unit Not Sampled
25 - Quarterly Audit
55 - Subst. Value (Valid Avg.)
56 - Backup CEMS (Valid Avg.)
98 - Automatic Calibration
99 - Software Adjust

Report printed on: 08/23/12 08:36:14

Opacity 6-Min Data Summary

Facility Name: T.E.S. Filer City Station **Location:** Filer City, MI **Source:** Boiler 2

Period: 08/22/12 14:10:00 To 08/22/12 16:30:00; Records = 24

RUN 3

Date/Time	Process Code: Opacity	Boiler 2 Opacity (%)	MC	Boiler 2 Valid Count	Boiler 2 Limit
08/22/12 14:11:37	8	0.75	00	6	10.0
08/22/12 14:17:34	8	0.77	00	6	10.0
08/22/12 14:23:34	8	0.79	00	6	10.0
08/22/12 14:29:38	8	0.75	00	6	10.0
08/22/12 14:35:34	8	0.75	00	6	10.0
08/22/12 14:41:42	8	0.75	00	6	10.0
08/22/12 14:47:37	8	0.71	00	6	10.0
08/22/12 14:53:35	8	0.74	00	6	10.0
08/22/12 14:59:37	8	0.75	00	6	10.0
08/22/12 15:05:34	8	0.76	00	6	10.0
08/22/12 15:11:37	8	0.76	00	6	10.0
08/22/12 15:17:38	8	0.78	00	6	10.0
08/22/12 15:23:35	8	0.77	00	6	10.0
08/22/12 15:29:36	8	0.70	00	6	10.0
08/22/12 15:35:32	8	0.72	00	6	10.0
08/22/12 15:41:35	8	0.75	00	6	10.0
08/22/12 15:47:36	8	0.75	00	6	10.0
08/22/12 15:53:33	8	0.72	00	6	10.0
08/22/12 15:59:30	8	0.72	00	6	10.0
08/22/12 16:05:38	8	0.70	00	6	10.0
08/22/12 16:11:34	8	0.72	00	6	10.0
08/22/12 16:17:35	8	0.71	00	6	10.0
08/22/12 16:23:37	8	0.75	00	6	10.0
08/22/12 16:29:33	8	0.72	00	6	10.0
	Report Average:	0.74		6	10.0
	Report Max Values:	0.79		6	10.0
	Report Min Values:	0.70		6	10.0

PC - Process Codes:

01 - Changing Fuels
02 - Control Equipment Malfunction
03 - Startup
04 - Shutdown
05 - Process Down
06 - Clean Process Equipment
07 - Clean Control Equipment
08 - Normal Operation
09 - Missing

MC - Monitoring Codes:

00 - System OK
10 - Required Adjustment Not Made
11 - Excess Drift Primary Analyzer
12 - Excess Drift Ancillary Analyzer
13 - Process Down
14 - Recalibration
15 - Preventative Maintenance
16 - Primary Analyzer Malfunction
17 - Ancillary Analyzer Malfunction
18 - Data Handling System Malfunction
19 - Sample Interface Malfunction
20 - Corrective Maintenance
21 - Blowback
22 - Analyzer Under/Over Range
23 - Unit Not Sampled
25 - Quarterly Audit
55 - Subst. Value (Valid Avg.)
56 - Backup CEMS (Valid Avg.)
98 - Automatic Calibration
99 - Software Adjust

Report printed on: 08/23/12 08:37:01

Attachment 12
Fuel Analysis

T.E.S. FILER CITY STATION MONTHLY SUMMARY

August 2012

TDF Loading Data

(96 tons max 48 tons in each boiler)

COAL / PETROLEUM COKE Blend

65.4 TONS MAX LIMIT per BOILER

Petroleum Coke Data

Opening Inventories (%): Petcoke	PRB	Bituminous
14.40%	32.15%	53.45%

Prior Month Reading From Scale # 1: 7995.2 <--------

Prior Month Reading From Scale # 2: 8089.6 <--------

Date	Common Pile Daily Percenatage: Petcoke	PRB	Bituminous	Tons of Petcoke Burned This Day	Tons of PRB Burned This Day	Tons of Bituminous Burned This Day	Tons of TDF Burned this day in Boiler #1	#1 BLR TDF BURNED YEAR TO DATE	Tons of TDF Burned this day in Boiler #2	#2 BLR TDF BURNED YEAR TO DATE	Tons of Petcoke Burned in Boiler 1	Petcoke Percentage	Tons of Petcoke Burned in Boiler 2	Petcoke Percentage	Total Petcoke Burned This Day
20-Aug-12	14.40%	32.11%	53.49%	106.412	237.3	395.3	32	8776.9	34.6	8865.5	52.1259	14.40%	54.2859	14.40%	106.4118
21-Aug-12	14.40%	32.11%	53.49%	104.828	233.7	389.4	28.3	8805.2	36.3	8901.8	48.8141	14.40%	56.0138	14.40%	104.8279
22-Aug-12	14.40%	32.11%	53.49%	98.780	220.3	367.0	41.9	8847.1	39.1	8940.9	47.8061	14.40%	50.9740	14.40%	98.7801
23-Aug-12	14.40%	32.09%	53.51%	101.805	226.9	378.3	44.5	8891.6	42.4	8983.3	50.1103	14.40%	51.6943	14.40%	101.8046
				3049.8	6804.4	11325.8									
TOTALS				TOTAL PC	TOTAL PRB	TOTAL BIT	1184.1		1093.2		1568.8083		1480.9708		3049.7791

Fuel Usage During ROP Emission Tests

	Coal (Bit./PRB/Petcoke) ton/hr	%	TDF ton/hr	%	Wood ton/hr	%		Run time (min	% of run burning wood
Unit 1 Run 1 (8/21/12 0944-1151)	30.33	96.26	1.18	3.74	0	0.00	100.00	127	0.00%
Unit 1 Run 2 (8/21/12 1243-1450)[1]	30.33	93.64	1.18	3.64	0.88	2.72	100.00	127	48.82%
Unit 1 Run 3 (8/21/12 1509-1713)	30.33	91.04	1.18	3.54	1.81	5.42	100.00	124	100.00%
Unit 2 Run 1 (8/22/12 0915-1120)	28.58	94.61	1.63	5.39	0	0.00	100.00	125	0.00%
Unit 2 Run 2 (8/22/12 1145-1351)[2]	28.58	91.54	1.63	5.22	1.01	3.25	100.00	126	52.38%
Unit 2 Run 3 (8/22/12 1418-1624)	28.58	88.91	1.63	5.07	1.94	6.02	100.00	126	100.00%

[1] Wood fuel was fed into boiler #1 beginning at 1348. The amount of wood burned (ton/hr) was multiplied by the percentage of the run duration during which wood burned.

[2] Wood fuel was fed into boiler #2 beginning at 1335. The amount of wood burned (ton/hr) was multiplied by the percentage of the run duration during which wood burned.

Fuel Analysis During ROP Emission Tests[3]

	Moisture %	Ash %	Sulfur %	Heating Value Btu/lb
Unit 1 Run 1 (8/21/12 0944-1151)	14.41	7.17	2.08	13,369
Unit 1 Run 2 (8/21/12 1243-1450)	15.18	7.08	2.03	13,233
Unit 1 Run 3 (8/21/12 1509-1713)	15.95	7.00	1.97	13,097
Unit 2 Run 1 (8/22/12 0915-1120)	15.31	7.47	1.90	13,317
Unit 2 Run 2 (8/22/12 1145-1351)	16.20	7.36	1.84	13,156
Unit 2 Run 3 (8/22/12 1418-1624)	16.96	7.27	1.79	13,018

[3]Fuel analysis for coal (including Petcoke, PRB, Bituminous) was performed by Consumers Energy Weadock plant results technician from samples obtained by Filer City staff on day of test. Wood waste and TDF analyses is based upon historical analysis (August 2011-March 2012) provided by Filer City plant staff.

MISC. FUEL LAB COAL ANALYSIS

SAMPLE DESCRIP.	Filer City Plant
SAMPLE DATE:	8/21/2012
TECH. INT.	RET

[redacted]

BTU	RUN 1	RUN 2
CRUCIBLE ID	B	6
SAMPLE ID	966	967
SAMPLE WEIGHT	0.9794	0.9773
SULFUR	1.880	1.890
FINAL BTU	12082	12108
MOISTURE		
CRUCIBLE ID	40	1
COAL WT.	0.9277	0.9652
CRUC. + DRY	15.7060	16.4391
CRUC. WT.	14.8637	15.5626
ASH		
CRUCIBLE ID	2B	2P
COAL WT.	0.9563	0.9468
CRUC. + ASH	14.3810	14.7354
CRUC. WT.	14.3214	14.6765

SULFUR:	2.08
ASH:	6.86
BTU:	13320

SUMMARY OF	MISC 1		8/21/2012	AVG.	
MOISTURE	9.21	9.19		**9.20**	MF
SULFUR	2.07	2.08		**2.08**	SULFUR
ASH	6.86	6.85		**6.86**	ASH
BTU	13307	13333		**13320**	BTU
FAM	14288	14314		**14301**	FAM
RAF	93.14	93.15		93.14	RAF
RMF	90.79	90.81		90.80	RMF

TOTAL MOISTURE = 14.92 %

MISC. FUEL LAB COAL ANALYSIS

SAMPLE DESCRIP.	Filer City Plant
SAMPLE DATE:	8/22/2012
TECH. INT.	ret

[redacted]

BTU	RUN 1	RUN 2
CRUCIBLE ID	PP	O
SAMPLE ID	968	969
SAMPLE WEIGHT	0.9062	0.9375
SULFUR	1.720	1.730
FINAL BTU	12082	12059
MOISTURE		
CRUCIBLE ID	10	7
COAL WT.	1.0398	1.0479
CRUC. + DRY	15.5693	16.8911
CRUC. WT.	14.6218	15.9356
ASH		
CRUCIBLE ID	1C	1Q
COAL WT.	0.9508	0.9626
CRUC. + ASH	14.1995	13.3772
CRUC. WT.	14.1388	13.3151

SULFUR:	1.89
ASH:	7.04
BTU:	13242

SUMMARY OF	MISC 2		8/22/2012	AVG.	
MOISTURE	8.88	8.82		**8.85**	MF
SULFUR	1.89	1.90		**1.89**	SULFUR
ASH	7.01	7.08		**7.04**	ASH
BTU	13259	13225		**13242**	BTU
FAM	14258	14232		**14245**	FAM
RAF	92.99	92.92		92.96	RAF
RMF	91.12	91.18		91.15	RMF

TOTAL MOISTURE = 16.10%

T.E.S. Filer City

Tire Derived Fuel (TDF) Analysis*

2011

		Ash (%)		Sulfur(%)		GCV Btu/lb	
	Tot. Moisture (%)	As Rec'd	Dry	As Rec'd	Dry	As Rec'd	Dry
August	0.76	12.97	13.07	2.41	2.43	14623	14735
September	0.85	14.35	14.47	2.23	2.25	14315	14438
October	0.93	18.37	18.54	2.04	2.06	13602	13730
November	1.53	11.34	11.52	1.28	1.30	14916	15148
December	1.33	18.73	18.98	1.61	1.63	14962	15163

2012

	Tot. Moisture (%)	Ash (%)		Sulfur(%)		GCV Btu/lb	
		As Rec'd	Dry	As Rec'd	Dry	As Rec'd	Dry
January	2.34	15.05	15.41	2.05	2.10	12768	13074
February	1.30	15.48	15.69	2.60	2.64	15287	15487
March	1.85	12.28	12.51	2.43	2.48	15016	15299
Average	1.36	14.82	15.02	2.08	2.11	14436.13	14634.25

*This is the most recent TDF fuel analysis data provided by Filer City.

T.E.S. Filer City

Wood Waste Fuel Analysis*

2011

		Ash (%)		Sulfur(%)		Calorific Value Btu/lb	
	Tot. Moisture (%)	As Rec'd	Dry	As Rec'd	Dry	As Rec'd	Dry
August	35.62	2.94	4.56	0.04	0.06	5400	8388
September	35.01	2.72	4.18	0.03	0.05	5361	8249
October	39.34	2.56	4.22	0.04	0.07	5013	8264
November	48.45	2.94	5.70	0.02	0.04	4325	8390
December	46.35	2.96	5.52	0.13	0.24	4460	8314

2012

		Ash (%)		Sulfur(%)		Calorific Value Btu/lb	
	Tot. Moisture (%)	As Rec'd	Dry	As Rec'd	Dry	As Rec'd	Dry
January	47.45	1.74	3.30	0.03	0.05	4413	8398
February	43.62	2.09	3.71	0.02	0.04	4724	8378
March	45.96	1.30	2.41	0.03	0.05	4549	8417
Average (7 months)	42.73	2.41	4.20	0.04	0.08	4780.63	8349.75

*This is the most recent Wood Waste fuel analysis data provided by Filer City.

Attachment 13
Calibration Data

Airgas

CERTIFICATE OF ANALYSIS

Customer:	Airgas Specialty Gases	**Cylinder Size:**	8.0 Cu. Ft.
PO Number:	112326948DS	**Cylinder Volume:**	221 Liter
Part Number:	NI UHPTA1 / 221L-114	**Cylinder Pressure:**	250 psig
Lot Number:	HAL-114-7	**Valve Outlet:**	CGA 165
Analysis Date:	7/20/2011	**Blend Tolerance:**	+/-5%

Use Before: 7/20/2015

ANALYTICAL RESULTS

Component	Requested Concentration	Actual Concentration (Mole %)	Analytical Uncertainty
Nitrogen	100% vol.	99.99% vol.	+/- 2 %

THC < 0.5 PPM

The calibration gas prepared by Airgas is considered a certified standard. It is prepared by gravimetric, or partial pressure techniques. The calibration standard provided is prepared by weights traceable to the National Institute of Standards and Technology (NIST) or by using NIST Standard Reference Materials where available.

Analyst:

Rebecca Ortiz

Airgas

CERTIFICATE OF ANALYSIS

Grade of Product: CERTIFIED STANDARD-SPEC

Airgas Speciality Gases
11711 S. Alameda St.
Los Angeles, CA 90059
(323) 568-2203 Fax: (323) 567-3686
www.airgas.com

Part Number:	X03NI86CTA10000	Reference Number:	48-124268767-2
Cylinder Number:	CZL870	Cylinder Volume:	227.0 LG
Laboratory:	ASG - Los Angeles - CA	Cylinder Pressure:	500 PSIG
Analysis Date:	Jun 17, 2011	Valve Outlet:	165

Product composition verified by direct comparison to calibration standards traceable to NIST ASTM Class 1 weights and/or NIST gas mixture reference materials.

ANALYTICAL RESULTS

Component	Requested Concentration	Actual Concentration (Mole %)	Analytical Uncertainty
OXYGEN	5.000 %	5.088 %	+/- 2%
CARBON DIOXIDE	9.000 %	8.967 %	+/- 2%
NITROGEN	Balance		

Notes:

Approved for Release

TESFiler0001253

IDEAL GASES

Accuracy is our law

Cylinder Control Number: 0823103
Part Number: 112M
Date of Lot Manufacture: 23 August 2010

Certificate of Analysis

Certified Standard

Component	Requested Concentration	Certified Concentration
Oxygen	9.0%	8.9%
Carbon Dioxide	18.0%	18.2%
Nitrogen	Balance	Balance

Method of Manufacture: Gravimetric
Blend Tolerance: +/- 5%
Analytical Accuracy: +/- 2%
Cylinder Pressure @ 70 degrees F 240 PSIG
Cylinder Volume 221 L
Method of Analysis: ECD

Analyst: R Moore
Livonia, MI

ZERO AND CALIBRATION LINEARITY DATA

DATE	8/21/2012	UNIT	Filer 1
ANALYST	BCP	LOCATION	Stack

O2 ANALYZER SPAN (%) = 8.9

	CYLINDER VALUE	ANALYZER RESPONSE	ABSOLUTE DIFFERENCE	DIFFERENCE (%of span) (must be within 2%)
ZERO GAS	0.0	0.1	0.1	1.1%
MID LEVEL GAS	5.1	5.0	0.1	1.1%
HIGH LEVEL GAS	8.9	8.9	0	0.0%

CO2 ANALYZER SPAN (%) = 18.2

	CYLINDER VALUE	ANALYZER RESPONSE	ABSOLUTE DIFFERENCE	DIFFERENCE (%of span) (must be within 2%)
ZERO GAS	0.0	0.1	0.10	0.5%
MID LEVEL GAS	9.0	9.2	0.20	1.1%
HIGH LEVEL GAS	18.2	18.1	0.1	0.5%

ZERO AND CALIBRATION DRIFT DATA

DATE 08/21/12
UNIT Filer 1
LOAD High
RUN # 1

O2 ANALYZER SPAN= 8.9

	CYLINDER VALUE	INITIAL RESPONSE (PPM)	FINAL RESPONSE (PPM)	DIFFERENCE (PPM)	PERCENT DRIFT
ZERO GAS	0.0	0.1	0.1	0.0	0.0%
MID-LEVEL	5.1	5.0	4.9	-0.1	-1.1%

CO2 ANALYZER SPAN= 18.2

	CYLINDER VALUE	INITIAL RESPONSE %	FINAL RESPONSE %	DIFFERENCE (PPM)	PERCENT DRIFT
ZERO GAS	0.0	0.1	0.1	0.0	0.0%
MID-LEVEL	9.0	9.2	9.0	-0.2	-1.1%

DATE 08/21/12
LOAD High
RUN # 2

O2 ANALYZER SPAN= 8.9

	CYLINDER VALUE	INITIAL RESPONSE (PPM)	FINAL RESPONSE (PPM)	DIFFERENCE (PPM)	PERCENT DRIFT
ZERO GAS	0.0	0.1	0.1	0.0	0%
MID-LEVEL	5.1	4.9	4.9	0.0	0.0%

CO2 ANALYZER SPAN= 18.2

	CYLINDER VALUE	INITIAL RESPONSE %	FINAL RESPONSE %	DIFFERENCE (PPM)	PERCENT DRIFT
ZERO GAS	0.0	0.1	0.2	0.1	0.5%
MID-LEVEL	9.0	9.0	8.9	-0.1	-0.5%

DATE 08/21/12
LOAD High
RUN # 3

O2 ANALYZER SPAN= 8.9

	CYLINDER VALUE	INITIAL RESPONSE (PPM)	FINAL RESPONSE (PPM)	DIFFERENCE (PPM)	PERCENT DRIFT
ZERO GAS	0.0	0.1	0.1	0.0	0.0%
MID-LEVEL	5.1	4.9	4.9	0.0	0.0%

CO2 ANALYZER SPAN= 18.2

	CYLINDER VALUE	INITIAL RESPONSE %	FINAL RESPONSE %	DIFFERENCE (PPM)	PERCENT DRIFT
ZERO GAS	0.0	0.2	0.1	-0.1	-0.5%
MID-LEVEL	9.0	8.9	8.9	0.0	0.0%

$$\text{PERCENT DRIFT} = \frac{\text{ABSOL DIFF} \times 100}{\text{SPAN VALUE}}$$

PERCENT DRIFT MUST BE LESS THAN 3%

ZERO AND CALIBRATION LINEARITY DATA

DATE	8/22/2012	UNIT	Filer 2
ANALYST	BCP	LOCATION	Stack

O2 ANALYZER SPAN (%) = 8.9

	CYLINDER VALUE	ANALYZER RESPONSE	ABSOLUTE DIFFERENCE	DIFFERENCE (%of span) (must be within 2%)
ZERO GAS	0.0	0.0	0	0.0%
MID LEVEL GAS	5.1	5.0	0.1	1.1%
HIGH LEVEL GAS	8.9	9.0	0.1	1.1%

CO2 ANALYZER SPAN (%) = 18.2

	CYLINDER VALUE	ANALYZER RESPONSE	ABSOLUTE DIFFERENCE	DIFFERENCE (%of span) (must be within 2%)
ZERO GAS	0.0	0.1	0.10	0.5%
MID LEVEL GAS	9.0	8.9	0.10	0.5%
HIGH LEVEL GAS	18.2	18.1	0.1	0.5%

ZERO AND CALIBRATION DRIFT DATA

DATE 08/22/12
UNIT Filer 2
LOAD High
RUN # 1

O2 ANALYZER SPAN= 8.9

	CYLINDER VALUE	INITIAL RESPONSE (PPM)	FINAL RESPONSE (PPM)	DIFFERENCE (PPM)	PERCENT DRIFT
ZERO GAS	0.0	0.0	0.0	0.0	0.0%
MID-LEVEL	5.1	5.0	4.9	-0.1	-1.1%

CO2 ANALYZER SPAN= 18.2

	CYLINDER VALUE	INITIAL RESPONSE %	FINAL RESPONSE %	DIFFERENCE (PPM)	PERCENT DRIFT
ZERO GAS	0.0	0.1	0.1	0.0	0.0%
MID-LEVEL	9.0	8.9	9.0	0.1	0.5%

DATE 08/22/12
LOAD High
RUN # 2

O2 ANALYZER SPAN= 8.9

	CYLINDER VALUE	INITIAL RESPONSE (PPM)	FINAL RESPONSE (PPM)	DIFFERENCE (PPM)	PERCENT DRIFT
ZERO GAS	0.0	0.0	0.0	0.0	0%
MID-LEVEL	5.1	4.9	4.9	0.0	0.0%

CO2 ANALYZER SPAN= 18.2

	CYLINDER VALUE	INITIAL RESPONSE %	FINAL RESPONSE %	DIFFERENCE (PPM)	PERCENT DRIFT
ZERO GAS	0.0	0.1	0.1	0.0	0.0%
MID-LEVEL	9.0	9.0	9.0	0.0	0.0%

DATE 08/22/12
LOAD High
RUN # 3

O2 ANALYZER SPAN= 8.9

	CYLINDER VALUE	INITIAL RESPONSE (PPM)	FINAL RESPONSE (PPM)	DIFFERENCE (PPM)	PERCENT DRIFT
ZERO GAS	0.0	0.0	0.0	0.0	0.0%
MID-LEVEL	5.1	4.9	4.9	0.0	0.0%

CO2 ANALYZER SPAN= 18.2

	CYLINDER VALUE	INITIAL RESPONSE %	FINAL RESPONSE %	DIFFERENCE (PPM)	PERCENT DRIFT
ZERO GAS	0.0	0.1	0.1	0.0	0.0%
MID-LEVEL	9.0	9.0	9.0	0.0	0.0%

$$\text{PERCENT DRIFT} = \frac{\text{ABSOL DIFF} \times 100}{\text{SPAN VALUE}}$$

PERCENT DRIFT MUST BE LESS THAN 3%

PARTICULATE EMISSION MODULE
CALIBRATION LOG

PLANT Filer City UNIT 1 & 2 DATE 9/6/12 MODULE NO. 1

Reference Meter Y value 1.0016

Pbar (in. Hg) 29.34

GAS METER

TIME	DRY METER READING			METER ΔP	TEMPERATURE		REFERENCE METER READING			TEMPERATURE		DGM	FLOW (CFM)
MIN.	INITIAL	FINAL	VOLUME	in H2O	INITIAL	FINAL	INITIAL	FINAL	VOLUME	INITIAL	FINAL	Y	RATE
5.00	709.040	711.454	2.414	2.60	75	80	8.9626	9.0308	0.0682	70	70	1.01	0.47
5.00	711.454	713.842	2.388	2.60	80	80	9.0308	9.0988	0.068	70	70	1.02	0.47
5.00	713.842	716.232	2.390	2.60	80	80	9.0988	9.1662	0.0674	70	70	1.01	0.47
												1.01	

DIFFERENTIAL PRESSURE (MAGNEHELIC)

SCALE		REF.	MODULE	% DIFF (<5%)	SCALE		REF.	MODULE	% DIFF (<5%)	SCALE		REF.	MODULE	% DIFF (<5%)
0-1.0"	POS.	0.32	0.32	0.00	0-8.0"	POS.	1.50	1.50	0.00	0-2.0"	POS.	0.76	0.76	0.00
		0.45	0.45	0.00			3.40	3.40	0.00			1.20	1.20	0.00
		0.60	0.60	0.00			5.80	5.80	0.00			1.60	1.60	0.00
	NEG.	0.40	0.40	0.00		NEG.	2.00	2.00	0.00		NEG.	0.90	0.90	0.00
		0.65	0.65	0.00			4.50	4.50	0.00			1.30	1.30	0.00
		0.84	0.84	0.00			6.50	6.50	0.00			1.60	1.60	0.00

(Difference between Reference & Module must be equal to or less than 5%)

TEMPERATURE INDICATOR

REF	MODULE	< 2° F Difference
70	70	0.0%

STANDARDS USED:

ASTM Mercury in glass thermometer
0 - 10" Inclined manometer
Magnehelic calibration per Method 2, section 6.2.1
Reference test meter serial # 8003732
Dry gas meter calibrated per 40 CFR 60 method 5 section 10.3.2
Temperature calculations performed per Alternate Method 011

CALIBRATED BY : BMG

Method 2/2G Pitot Tube Inspection & Certification Sheet

1. Use a vise with parallel and perpendicular faces. Use an angle-measuring device (analog or digital) for this check.
2. Place the pitot tube in the vise, and level the pitot tube horizontally using the angle-measuring device.
3. Place the angle-measuring device as shown below.
4. Measure distance A.
5. Measure the external tube diameter (D_t) with a micrometer, machinist's rule, or internal caliper.
6. Record all data as shown on the form below.
7. Calculate dimensions w and z as shown below.

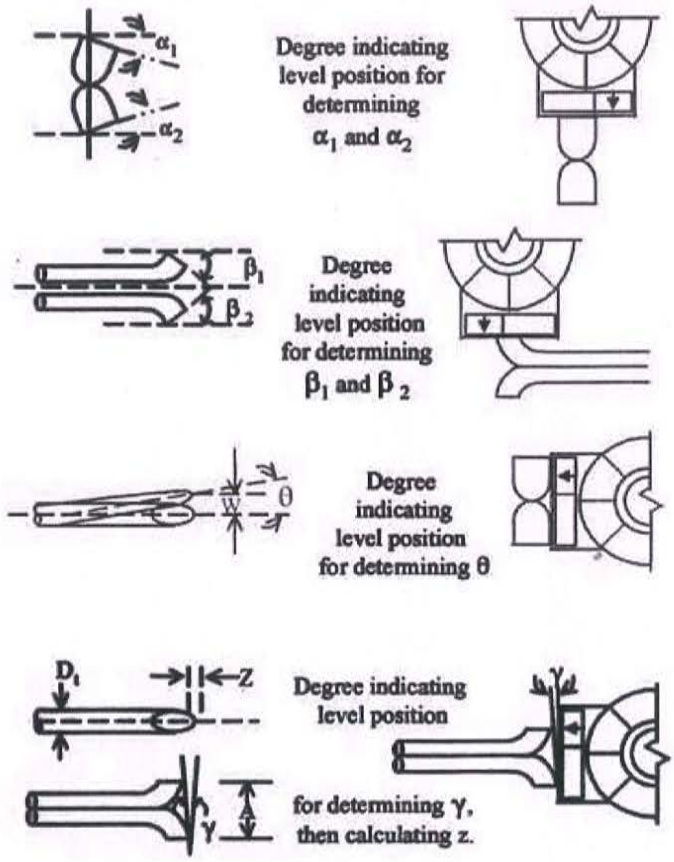

Level and Perpendicular?		yes
Obstructions?		No
Damaged?		No
α_1	$(-10^\circ < \alpha_1 < +10^\circ)$	0
α_2	$(-10^\circ < \alpha_2 < +10^\circ)$	0
B_1	$(-5^\circ < B_1 < +5^\circ)$	-1
B_2	$(-5^\circ < B_2 < +5^\circ)$	0
γ		0
Θ		0
$Z = A \tan \gamma$	$(\leq 0.125")$	0
$w = A \tan \Theta$	$(\leq 0.03125")$	0
D_t	$(3/16" < D_t < 3/8")$	.25
A		.915
$A/2D_t$	$(1.05 < P_s/D_t < 1.5)$	1.22

QA/QC Check

Completeness ____x_____ Legibility ____x_____ Accuracy __x_____
Specifications _____x_____ Reasonableness __x_____

Certification

I certify that the Type S pitot tube/probe ID __2332___ used at ____Filer City_____, meets or exceeds all specifications, criteria, and applicable design features in 40CFR60, Appendix A, Method 2.

Certified by: __BMG_____ Date: ____9/7/2012

APEX INSTRUMENTS SOURCE TESTING EQUIPMENT

Apex Instruments, Inc.
204 Technology Park Lane
Fuquay-Varina, NC 27526

S-TYPE PITOT TUBE CALIBRATION SHEET

Reference USEPA Reference Method 2 (40CFR60, App. A, Meth. 2)

PITOT SERIAL#	2332	CALIBRATION DATE:	17-May-11	
PITOT TYPE:	S-Type	BAROMETRIC PRESSURE:	29.15	in Hg
STD. PITOT TYPE:	Ellipsoidal	STATIC PRESSURE	-1.4	in H_20
Cp(std):	0.990	BLOCKAGE %:	N/A	
PROBE SERIAL#	TEA	CORRECTION FACTOR:	1.00	

	SIDE "A" CALIBRATION			
RUN NO.	Δ Pstd in H_2O	Δ Ps in H_2O	Cp(s)	DEVIATION Cp(s) - avg.Cp(s)
1	0.585	0.830	0.831	-0.001
2	0.585	0.825	0.834	0.001
3	0.585	0.828	0.832	0.000
		"A" AVERAGE	0.832	0.0013 (must be ≤ 0.01)

	SIDE "B" CALIBRATION			
RUN NO.	Δ Pstd in H_2O	Δ Ps in H_2O	Cp(s)	DEVIATION Cp(s) - avg.Cp(s)
1	0.585	0.828	0.832	0.000
2	0.585	0.828	0.832	0.000
3	0.585	0.830	0.831	-0.001
		"B" AVERAGE	0.832	0.0006 (must be ≤ 0.01)

ACCEPTANCE CRITERIA

AVERAGE 0.0005 AVG. Cp (A) - AVG. Cp (B) must be ≤ 0.01

If the Average and both Deviation Averages "A" & "B" are ≤ 0.01, then the OVERALL AVERAGE below may be used.
*** If NOT, use the "A" Average OR "B" Average.**

OVERALL AVERAGE 0.8321

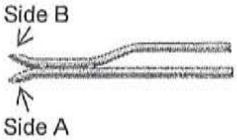

I certify that the above pitot tube was tested in accordance with the US EPA Method 2 standards. See the Code of Federal Regulations, Title 40, Part 60, Appendix A, Method 2, Item 4.

Print Name: Ted Arnzon Date 5-17-11

Signature:

NOZZLE CALIBRATION

DATE 9/7/2012

NOZZLE I.D. 3/16-4

TECH. BMG

Measurements (ID)

1. .188 Inches
2. .187 Inches
3. .188 Inches

Avg .188

DAMAGE? NO

Note: Difference between high and low measurement must be equal to or less than .004 inches.

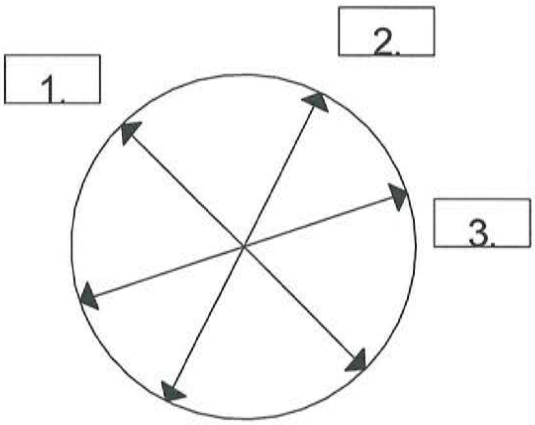

NOZZLE CALIBRATION

DATE 9/7/2012

NOZZLE I.D. 3/16-5

TECH. BMG

Measurements (ID)

1. .187 Inches
2. .188 Inches
3. .188 Inches

Avg .188

DAMAGE? NO

Note: Difference between high and low measurement must be equal to or less than .004 inches.

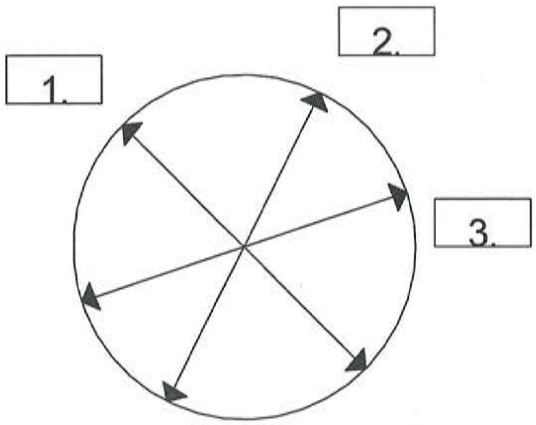

TGNMOC ANALYZER CALIBRATION ERROR DATA

Test Date: 8/21/2012
Client: TES Filer City
Source: Unit 1

Analyzer: Thermo 55I
Span, ppm: 50
Sample Location: Outlet

Calibration Gas Scale	Calibration Gas Blend	Cylinder Number	Cylinder Value ppm	Analyzer Response ppm	Absolute Difference percent	Difference (% of Span)
Zero	Zero Air	CC7759	0.00	0.01	0.01	0.02
Low	Methane/Air	ALM051223	15.20	15.20	0.00	0.00
Mid	Methane/Air	ALM042283	28.10	28.10	0.00	0.00
High	Methane/Air	ALM018168	45.20	45.20	0.00	0.00
Zero	Zero Air	CC7759	0.00	0.04	0.04	0.08
Low	Propane/Air	ALM051223	15.10	15.10	0.00	0.00
Mid	Propane/Air	ALM042283	27.30	27.30	0.00	0.00
High	Propane/Air	ALM018168	45.20	44.98	0.22	0.44

Prior to testing, the Thermo 55I is programmed with specific response factors following Method 25A specifications. During initial calibrations, these response factors are not applied; however upon completion of the calibration, the applicable non-methane response factor is applied to all subsequent instrument data.

TGNMOC ANALYZER CALIBRATION ERROR DATA

Test Date: 8/22/2012
Client: TES Filer City
Source: Unit 2

Analyzer: Thermo 55I
Span, ppm: 50
Sample Location: Outlet

Calibration Gas Scale	Calibration Gas Blend	Cylinder Number	Cylinder Value ppm	Analyzer Response ppm	Absolute Difference percent	Difference (% of Span)
Zero	Zero Air	CC7759	0.00	0.00	0.00	0.00
Low	Methane/Air	ALM051223	15.20	15.19	0.01	0.02
Mid	Methane/Air	ALM042283	28.10	28.11	0.01	0.02
High	Methane/Air	ALM018168	45.20	45.25	0.05	0.10
Zero	Zero Air	CC7759	0.00	-0.01	0.01	0.02
Low	Propane/Air	ALM051223	15.10	15.06	0.04	0.08
Mid	Propane/Air	ALM042283	27.30	27.32	0.02	0.04
High	Propane/Air	ALM018168	45.20	45.05	0.15	0.29

Calibration Error			
Date	TIME	TGNMOC as C3	
8/21/2012	9:25:49 AM	2.89	
8/21/2012	9:26:49 AM	0.04	Zero Gas
8/21/2012	9:27:49 AM	2.39	
8/21/2012	9:28:49 AM	2.98	
8/21/2012	9:29:49 AM	43.55	
8/21/2012	9:30:49 AM	43.98	
8/21/2012	9:31:49 AM	44.98	Upscale Gas 1 Response (45.2 ppm)
8/21/2012	9:32:49 AM	32.17	
8/21/2012	9:33:49 AM	27.30	
8/21/2012	9:34:49 AM	27.30	Upscale Gas 2 (27.3 ppm)
8/21/2012	9:35:49 AM	21.90	
8/21/2012	9:36:49 AM	16.98	
8/21/2012	9:37:49 AM	15.87	
8/21/2012	9:38:49 AM	15.10	Upscale Gas 3 (15.1 ppm)

Calibration Error			
Date	TIME	TGNMOC as C3	
8/22/2012	**8:21:23 AM**	**45.05**	Upscale Ga
8/22/2012	8:22:23 AM	0.34	
8/22/2012	8:23:23 AM	-0.01	
8/22/2012	8:24:23 AM	27.25	Upscale Ga
8/22/2012	8:25:23 AM	27.37	
8/22/2012	8:26:23 AM	27.25	
8/22/2012	**8:27:23 AM**	**27.32**	
8/22/2012	8:28:23 AM	27.33	
8/22/2012	8:29:23 AM	17.40	
8/22/2012	8:30:23 AM	15.01	
8/22/2012	8:31:23 AM	15.01	
8/22/2012	8:32:23 AM	15.06	
8/22/2012	8:33:23 AM	15.06	
8/22/2012	**8:34:23 AM**	**15.06**	Upscale Ga
8/22/2012	8:35:23 AM	-0.01	
8/22/2012	8:36:23 AM	-0.01	
8/22/2012	8:37:23 AM	-0.01	
8/22/2012	8:38:23 AM	-0.01	
8/22/2012	**8:39:23 AM**	**-0.01**	Zero Gas

CERTIFICATE OF ANALYSIS

AIR - CEM-CAL ZERO

Customer:	STOCK		
Part Number:	AI CZ15A	Reference Number:	32-112340399-5
Cylinder Analyzed:	CC7759	Cylinder Volume:	146 Cubic Feet
Laboratory:	MIC - Royal Oak-32 (SAP) - MI	Cylinder Pressure:	2000 PSIG
Analysis Date:	Aug 11, 2011	Valve Outlet:	590
Lot #:	32-112340399-5		

Expiration Date: Aug 11, 2016

ANALYTICAL RESULTS

Component	Requested Purity	Certified Concentration
Carbon Dioxide	<1 PPM	<1 PPM
NOx	<0.1 PPM	<0.1 PPM
Sulfur Dioxide	<0.1 PPM	<0.1 PPM
THC	<0.1 PPM	<0.1 PPM
Percent Oxygen	20-21 %	20.75 %
Moisture	<2 PPM	<2 PPM
Carbon Monoxide	<0.5 PPM	<0.5 PPM

Permanent Notes:

A calibration gas certified by the gas vendor not to contain concentrations of SO2, NOx, or total hydrocarbons above 0.1 parts per million (ppm), a concentration of CO above 1ppm, or a concentration of CO2 above 400ppm.
Product meets 40 CFR 1065 requirements

Notes:

Meets Federal Register specifications Title 40 C.F.R. 72.2

Impurities verified against analytical standards traceable to NIST by weight and/or analysis.

Signature On File

Approved for Release

AIR LIQUIDE | Air Liquide America Specialty Gases LLC | Scott™

RATA CLASS

Dual-Analyzed Calibration Standard

1290 COMBERMERE STREET, TROY, MI 48083 Phone: 248-589-2950 Fax: 248-589-2134

CERTIFICATE OF ACCURACY: EPA Protocol Gas

Assay Laboratory

P.O. No.: 58175-71-65800

AIR LIQUIDE AMERICA SPECIALTY GASES LLC Project No.: 05-88467-001
1290 COMBERMERE STREET
TROY, MI 48083

Customer

CLEAN AIR ENGINEERING
DON ALLEN
500 W. WOOD STREET
PALATINE IL 60067

ANALYTICAL INFORMATION

This certification was performed according to EPA Traceability Protocol For Assay & Certification of Gaseous Calibration Standards; Procedure G-1; September, 1997.

Cylinder Number: ALM051223 **Certification Date:** 26May2010 **Exp. Date:** 25May2013
Cylinder Pressure*:** 2000 PSIG

COMPONENT	CERTIFIED CONCENTRATION (Moles)		ANALYTICAL ACCURACY**	TRACEABILITY
METHANE	15.2	PPM	+/- 1%	Direct NIST and VSL
PROPANE	15.1	PPM	+/- 1%	Direct NIST and VSL
AIR		BALANCE		

*** Do not use when cylinder pressure is below 150 psig.

** Analytical accuracy is based on the requirements of EPA Protocol Procedure G1, September 1997.

REFERENCE STANDARD

TYPE/SRM NO.	EXPIRATION DATE	CYLINDER NUMBER	CONCENTRATION	COMPONENT
NTRM 2750 50	02Oct2011	ALM009178	49.80 PPM	METHANE
NTRM 1668	02Oct2012	ALM029313	98.80 PPM	PROPANE

INSTRUMENTATION

INSTRUMENT/MODEL/SERIAL#	DATE LAST CALIBRATED	ANALYTICAL PRINCIPLE
VARIAN/3400/7506	07May2010	TCD/FID
VARIAN/3400/7506	27Apr2010	TCD/FID

ANALYZER READINGS

(Z=Zero Gas R=Reference Gas T=Test Gas r=Correlation Coefficient)

First Triad Analysis | **Second Triad Analysis** | **Calibration Curve**

METHANE

Date: 26May2010 Response Unit:AREA
Z1=0.00000 R1=453145.0 T1=138424.0
R2=453954.0 Z2=0.00000 T2=138819.0
Z3=0.00000 T3=138885.0 R3=453421.0
Avg. Concentration: 15.20 PPM

Concentration=A+Bx+Cx2+Dx3+Ex4
r=0.999995
Constants: A=0.08502013
B=0.000108519 C=0
D=0 E=0

PROPANE

Date: 26May2010 Response Unit:AREA
Z1=0.00000 R1=2617777. T1=399935.0
R2=2618097. Z2=0.00000 T2=399596.0
Z3=0.00000 T3=399357.0 R3=2629871.
Avg. Concentration: 15.10 PPM

Concentration=A+Bx+Cx2+Dx3+Ex4
r=0.999996
Constants: A=0.00404671
B=3.754086E-05 C=0
D=0 E=0

APPROVED BY: ROBERT LESNIAK

TESFiler0001269

CERTIFIED MASTER CLASS

AIR LIQUIDE Air Liquide America Specialty Gases LLC Scott™

Single-Certified Calibration Standard

1290 COMBERMERE STREET, TROY, MI 48083 Phone: 248-589-2950 Fax: 248-589-2134

CERTIFICATE OF ACCURACY: Certified Master Class Calibration Standard

Product Information
Document # : 41468214-006
Item No.: M41125-P-30AL
P.O. No.: 58880-71-65000

Cylinder Number: ALM042283
Cylinder Size: 30AL
Certification Date: 28Apr2011
Expiration Date: 27Apr2014

Customer

CLEAN AIR ENGINEERING
DON ALLEN
500 WEST WOOD STREET
PALATINE, IL 60067
US

CERTIFIED CONCENTRATION

Component Name	Concentration (Moles)		Accuracy (+/-%)
METHANE	28.1	PPM	2
PROPANE	27.3	PPM	2
AIR		BALANCE	

TRACEABILITY

Traceable To

Scott Reference Standard

APPROVED BY: _____ DATE: 4-28-11

TESFiler0001270

AIR LIQUIDE Air Liquide America Specialty Gases LLC Scott

RATA CLASS

Dual-Analyzed Calibration Standard

1290 COMBERMERE STREET, TROY, MI 48083 Phone: 248-589-2950 Fax: 248-589-2134

CERTIFICATE OF ACCURACY: EPA Protocol Gas

Assay Laboratory

P.O. No.: 58186-71-55000

AIR LIQUIDE AMERICA SPECIALTY GASES LLC Project No.: 05-88384-016
1290 COMBERMERE STREET
TROY, MI 48083

Customer

CLEAN AIR ENGINEERING
DON ALLEN
500 W. WOOD STREET
PALATINE IL 60067

ANALYTICAL INFORMATION

This certification was performed according to EPA Traceability Protocol For Assay & Certification of Gaseous Calibration Standards; Procedure G-1; September, 1997.

Cylinder Number: ALM018168 Certification Date: 14Jun2010 Exp. Date: 13Jun2013
Cylinder Pressure***: 2000 PSIG

COMPONENT	CERTIFIED CONCENTRATION (Moles)		ANALYTICAL ACCURACY**	TRACEABILITY
METHANE	45.2	PPM	+/- 1%	Direct NIST and VSL
PROPANE	45.2	PPM	+/- 1%	Direct NIST and VSL
AIR		BALANCE		

*** Do not use when cylinder pressure is below 150 psig.

** Analytical accuracy is based on the requirements of EPA Protocol Procedure G1, September 1997.

REFERENCE STANDARD

TYPE/SRM NO.	EXPIRATION DATE	CYLINDER NUMBER	CONCENTRATION	COMPONENT
NTRM 2750 50	02Oct2011	ALM009178	49.80 PPM	METHANE
NTRM 1668	02Oct2012	ALM029313	98.80 PPM	PROPANE

INSTRUMENTATION

INSTRUMENT/MODEL/SERIAL#	DATE LAST CALIBRATED	ANALYTICAL PRINCIPLE
VARIAN/3400/7506	28May2010	TCD/FID
VARIAN/3400/7506	27May2010	TCD/FID

ANALYZER READINGS

(Z=Zero Gas R=Reference Gas T=Test Gas r=Correlation Coefficient)

First Triad Analysis | Second Triad Analysis | Calibration Curve

METHANE

Date: 14Jun2010 Response Unit:AREA
Z1=0.00000 R1=452648.0 T1=412406.0
R2=451938.0 Z2=0.00000 T2=412012.0
Z3=0.00000 T3=412425.0 R3=451655.0
Avg. Concentration: 45.20 PPM

Concentration=A+Bx+Cx2+Dx3+Ex4
r=0.999996
Constants: A=0.09302688
B=0.00010976 C=0
D=0 E=0

PROPANE

Date: 14Jun2010 Response Unit:AREA
Z1=0.00000 R1=2593536. T1=1188180.
R2=2593334. Z2=0.00000 T2=1187434.
Z3=0.00000 T3=1187862. R3=2609618.
Avg. Concentration: 45.20 PPM

Concentration=A+Bx+Cx2+Dx3+Ex4
r=0.999999
Constants: A=0.04653152
B=3.782395-05 C=0
D=0 E=0

APPROVED BY: ROBERT LESNIAK

TESFiler0001271

AIR LIQUIDE Air Liquide America Specialty Gases LLC Scott™

Shipped From:
1290 COMBERMERE STREET
TROY MI 48083
Phone: 248-589-2950 Fax: 248-589-2134

CERTIFICATE OF ANALYSIS

ALA-CYL-ROMEOVILLE, IL (84131)
UNIT A
TRANSFER ACCOUNT
27 FORESTWOOD CT
ROMEOVILLE IL 60446
US

DOCUMENT#:43268301 -001
PO#: STOCK H2 30AL
ITEM #: P543-30AL
DATE: 22Sep2011

CYLINDER #: ALM025100
FILL PRESSURE: 02000 PSIG PRODUCT EXPIRATION: 22Sep2014

PURE MATERIAL: HYDROGEN CAS# 1333-74-0

GRADE: ZERO GAS

PURITY: 99.99%

IMPURITY	MAXIMUM CONCENTRATIONS	ACTUAL CONCENTRATIONS
THC	0.5 PPM	< 0.5 PPM

LOT # HYDBULK092211

QC BATCH : TRO0042760

ANALYST: SAJAD HYDER

TESFiler0001272