Indianapolis Power & Light
Petersburg Station Unit 2
Process Flow Diagram

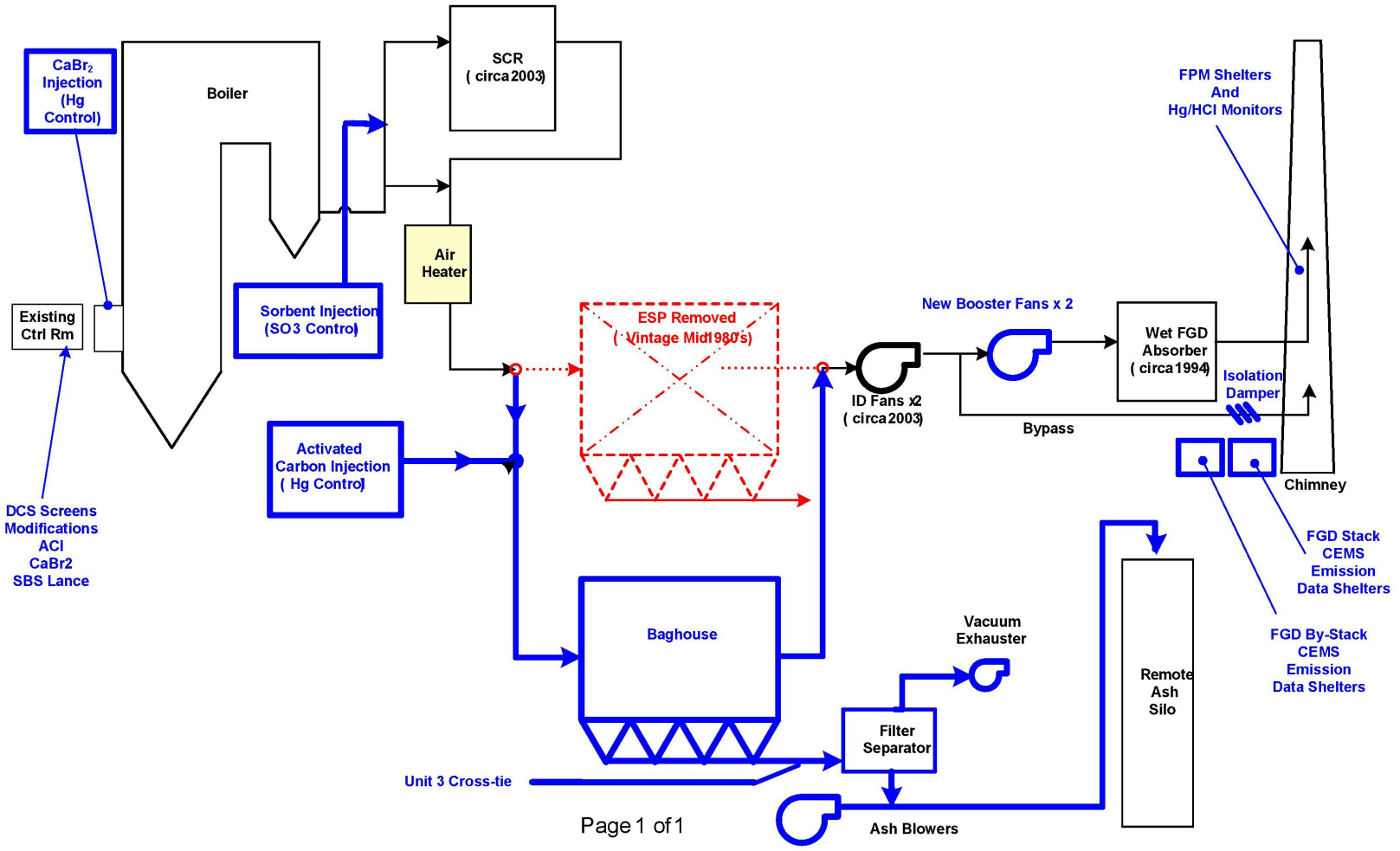

IPL-000004