Indianapolis Power & Light
Petersburg Station Unit 3
Process Flow Diagram

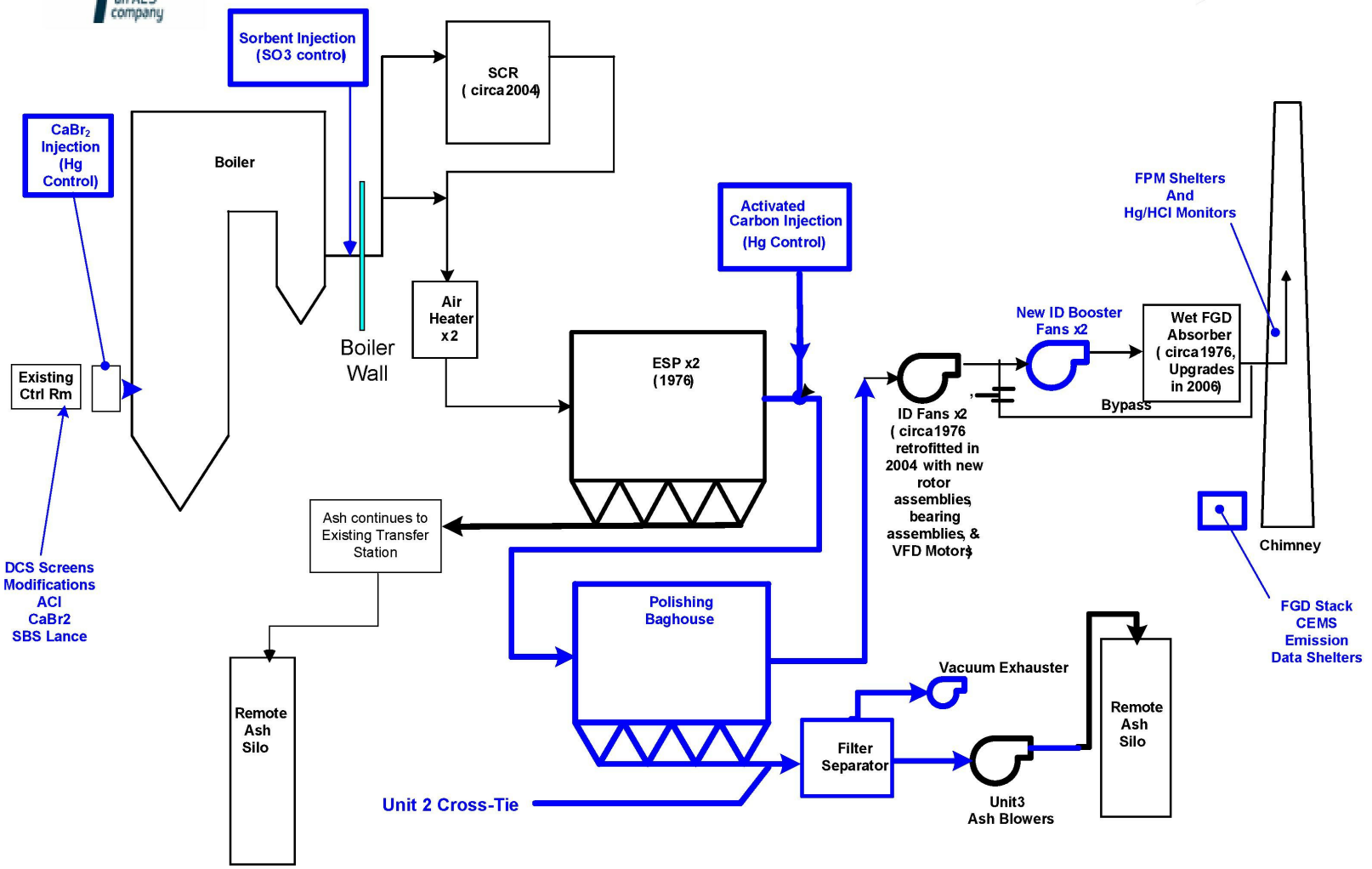

IPL-000003