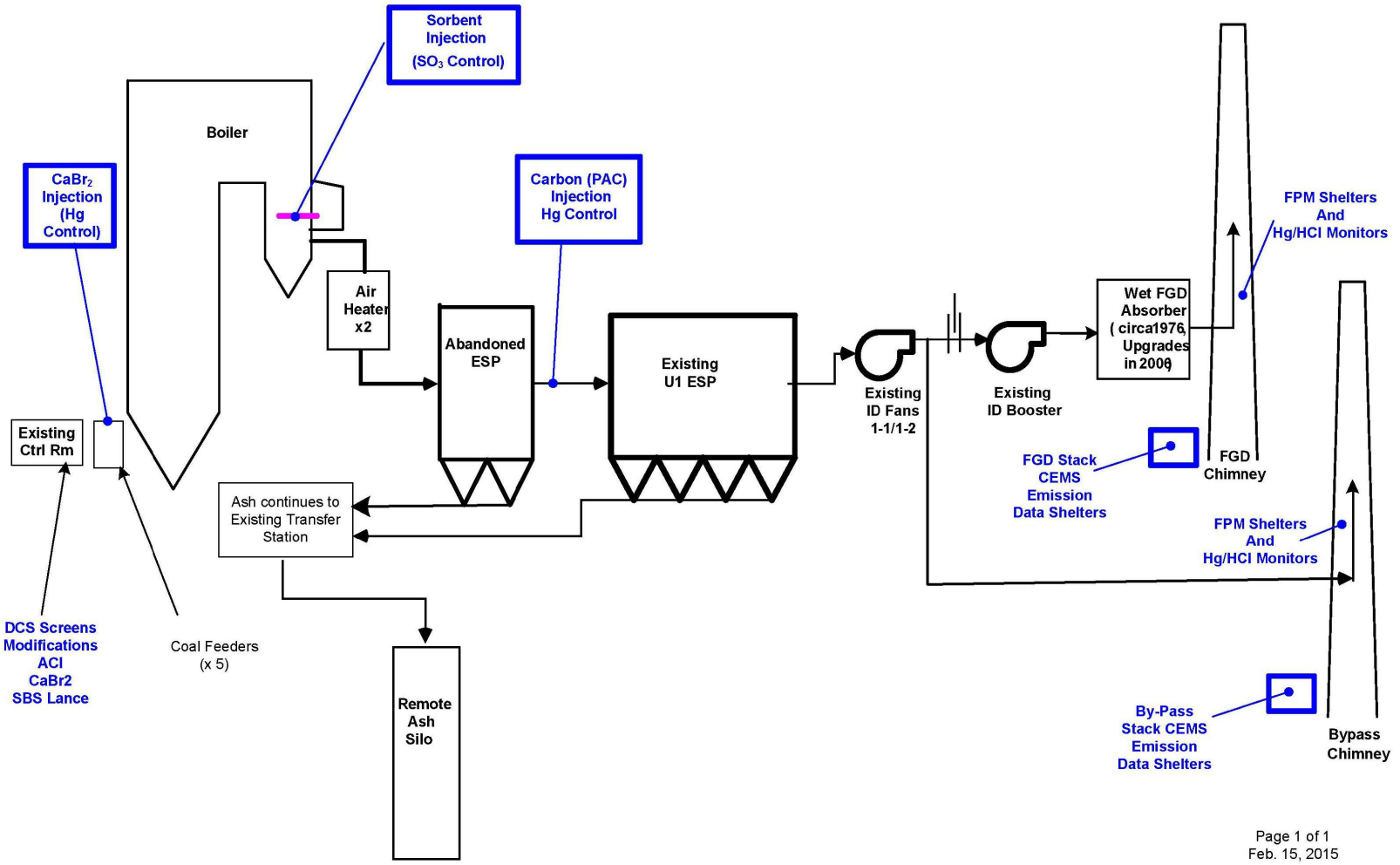# Indianapolis Power & Light
# Petersburg Station Unit 1
# Process Flow Diagram