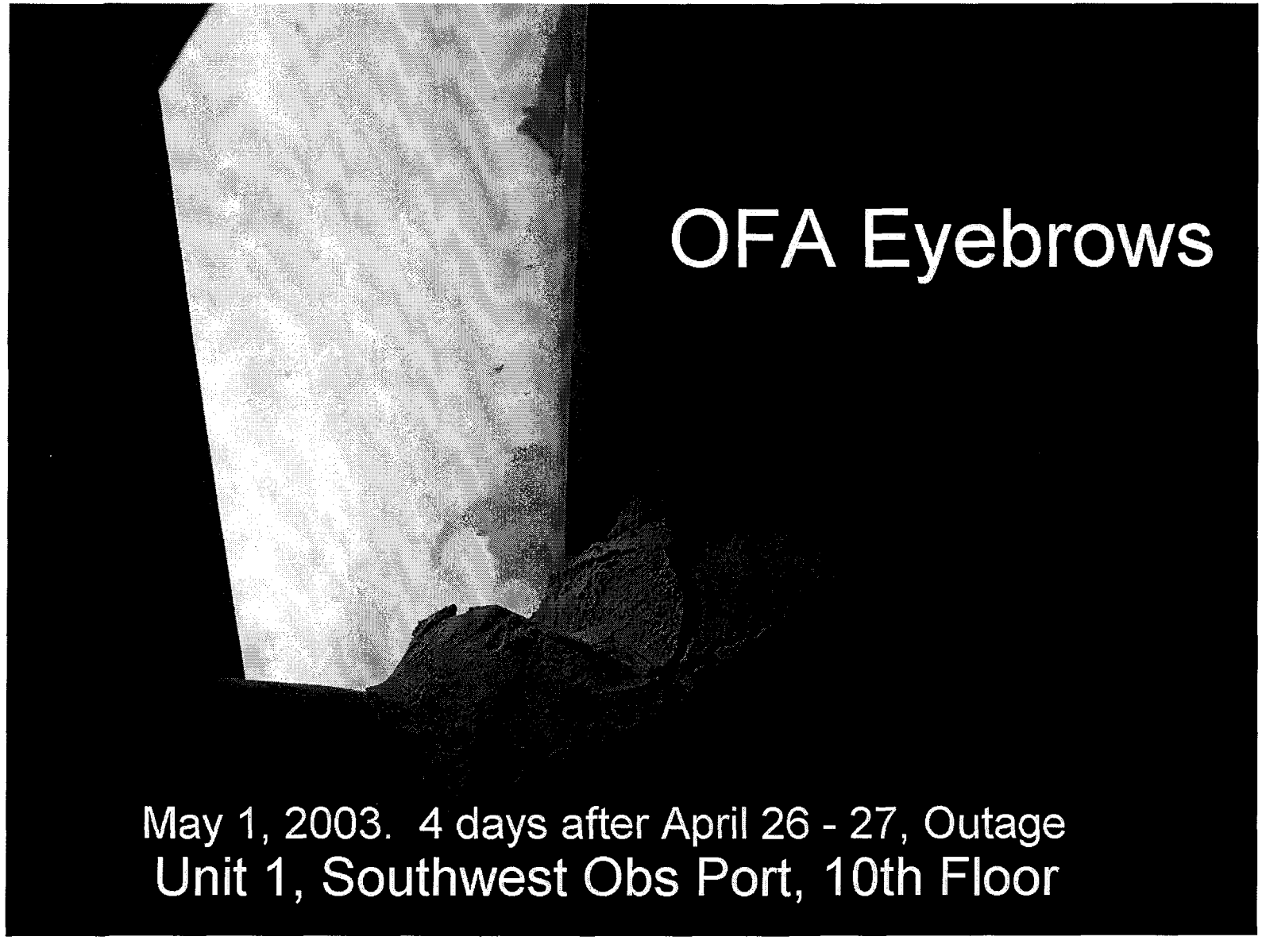
OFA Eyebrows
May 1, 2003. 4 days after April 26 - 27, Outage
Unit 1, Southwest Obs Port, 10th Floor

IP7_040208

IP7_040209

From: Ken Nielson
To: Aaron Nissen; Bill Morgan; Garry Christensen; James Nelson; Jerry Fi...
Date: 12/1/2003 7:01 PM
Subject: U1 Outage Report on OFA Work

FYI:
Summary of the U1 OFA work completed by IPSC Maintenance and Rocky Mountain personnel under the direction of Phil Hailes and Ken Nielson during the 11/26/03 mini-outage. Photos showing the problems listed below are found in the following directory - **N:\Current\Projects\IGS02\IGS02-14 Boiler Modifications - JHN\6.Documentation\U1 Mini-outage Photos-Control Linkage & bearings**.

Problem Found: Broken Weld - on the NW 1/3 damper linkage, through-wall shaft, external drive-arm to shaft weld.
Action taken: 3 welds placed on inside and outside of the drive arm using 309 SS rod. (Note: The drive-arm to shaft weld in the same location on the NE 1/3 damper linkage was reinforced with the same method even though that weld was not broken. During the June outage, all other drive-arm to through-wall shaft welds were similarly reinforced.

Problem Found: Bent linkage - on the SW 1/3 damper linkage, the connecting link between the motor drive arm and the external drive-arm on the through-wall shaft would bend when the motor drive was driven to 100%. It was also observed that with the motor drive at 0%, actual damper position was approx. 25% open. Bending appeared to be caused by over-stroking of the motor drive-arm due to an error in the positioning of the drive-arm on the splined shaft of the motor drive.
Action Taken: Bent linkage repaired and the drive arm was correctly positioned on the motor drive splined shaft. This corrected both the over stroking and subsequent linkage pressure at the 100% position and the damper position error at the 0% position.

Problem Found: Failed linkage bearings - all OFA bearings internal to the OFA duct were found to have failed. This includes bearings on the through-wall shaft, distribution shaft, and individual damper shafts. Problem was due bearing service ratings being 700 degF with operational temperatures at 700 degF, bending and flexure pressure on linkage related to linkage design, and wear from ash in duct air.
Action Taken: All bearings on the distribution shafts were replaced with graphite based journals rated to 1000 degF. Outage time constraints did not permit replacement of the bearings on the through-wall shafts or the individual damper shafts. Wear plates were installed on all through wall shafts during the June mini-outage for shaft protection until a planned outage will permit replacement. Replacement of remaining bearings and inspection of replaced bearings recommended for next major outage.

Problem Found: SE 2/3 shaft in flexure with damper at 100% position - see photo. Flexure caused by improper position of through-wall shaft internal drive arm. No action take due to outage time constraints. Correction recommended during next major outage.

Problem Found: Significant bending moment pressure observed on all through-wall shafts during damper actuation. No action taken as issue is related to linkage design and outage time constraints prevented implementation of possible solutions. Further evaluation of this problem recommended.

Additional recommendations: Inspection of OFA linkage recommended at next outage with fireside clearance.

IP7_040210

From: Ken Nielson
To: Bruce McCann
Date: 2/18/2004 3:14 PM
Subject: Unit 2 OFA tagging list from Ken Nielson
Attachments: IGS02-14 U2 Tagging info.wpd

Bruce,
The attached wordperfect document lists the equipment for U2 OFA and the tagging information. I will need clearances or an OK_To on 2APA-PPL-008 and 2APA-PPL-009 to connect wiring. I will also need either clearance or OK_To permits for the breakers in each cabinet for connection of wiring and amplifier line-up and tuning on the drives. The breakers associated with PPL-008 can be put on one permit and the breakers from PPL-009 can be on another.

Let me know if questions or concerns with this request.
Thank you,
Ken Nielson

IP7_040211

REV	DESCRIPTION	DATE	DWN	APV
1	CERTIFIED CORRECT	12/29/03	SCL	AEC

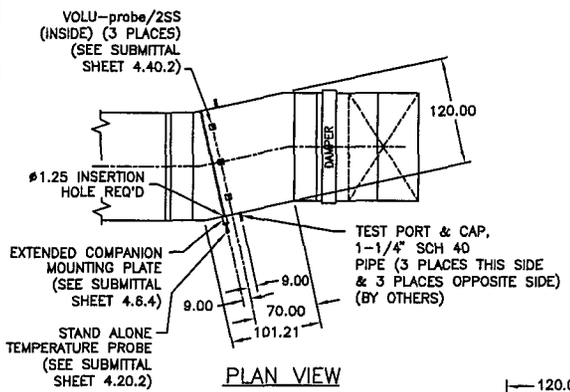

PLAN VIEW

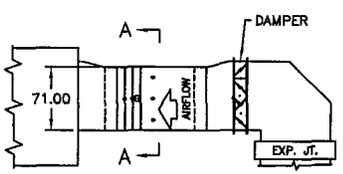

ELEVATION – FRONT OFA FEEDER DUCT

(PER BBPI DWG 100210-7239810-00)
TYPICAL OF (1) AS SHOWN & (1) OPPOSITE
TAGS: OFA SUPPLY NE, NW
ID#: 100210-72383101

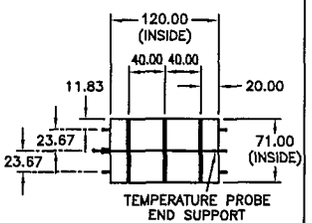

SECTION A–A

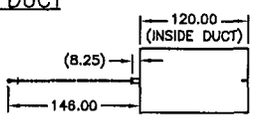

TEMP. PROBE REMOVAL CLEARANCE

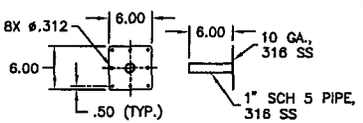

TEMP. PROBE END SUPPORT

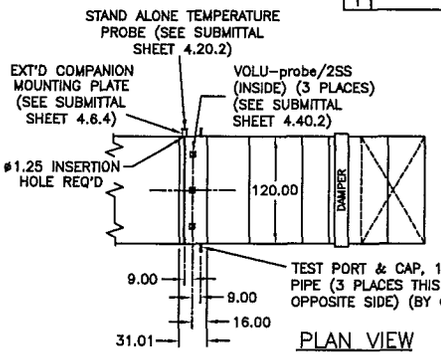

PLAN VIEW

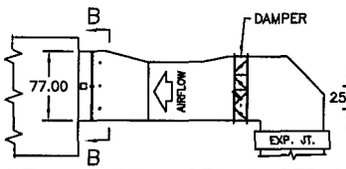

ELEVATION – REAR OFA FEEDER DUCT

(PER BBPI DWG 100210-7239810-00)
TYPICAL OF (1) AS SHOWN & (1) OPPOSITE
TAGS: OFA SUPPLY SE, SW
ID#: 100210-72383102

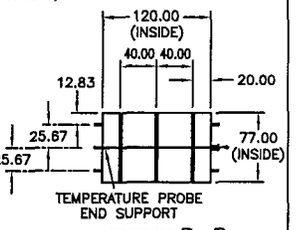

SECTION B–B

PROJECT:
INTERMOUNTAIN POWER UNIT 2
DELTA, UT
P.O. #434424
AMC W.O. #50600

AIR MONITOR CORPORATION
P.O. BOX 5368 SANTA ROSA CA 95402
TELEPHONE (707) 544-2706

CERTIFIED CORRECT
CHECKED BY SCL DATE 12/29/03
APPROVED BY AEC DATE 12/29/03
AIR MONITOR CORPORATION
P.O. Box 5368
Santa Rosa, CA, 95402

VOLU-probe/2SS
EQUIPMENT LOCATION

CAD PLOT	FORMAT	DWG NO.	REV
12/30/03 09:02:43	B	W50600AB	1

SCALE FACTOR: 100.00 SCALE: 1:100.00 DO NOT SCALE DRAWING

IP7_040212

From: CHRISTINA SPENCER
To: KENNETH NIELSON
Date: 9/16/2003 2:07 PM
Subject: Work order 02-60456-32 Has been Closed

INSTALL REPLACEMENT 1/3 OVER FIRE AIR DAMPER DRIVES PER ENGINEERING REQUEST

Work assigned to crew 57

Total Hours 88.50

Total Material Cost 138.00

IP7_040213

From: Ken Nielson
To: Aaron Nissen
Date: 3/26/2003 8:03 PM
Subject: OFA Controls testing (Revised)
Attachments: OFA Test Procedure.doc

Aaron,
Attached is the revised controls testing plan. Please review and add any additional requirements or criteria necessary.

Let me know if there are problems or questions.
Thanks,
Ken N.

<date>

IP7_040214

3D PROBE WORK SHEET

PROJECT:---
Test Run:-----
INPUTS

STD. TEMP. DEGREES F (t std)		68				
STD. BAROMETRIC PRESSURE " Hg (Pstd)		29.92				
DUCT SIZE (D)	Traverse	75.000	120.000	75.000	120.000	Flow Element
AVERAGE TEMPERATURE DEGREES F (ts)		663				
AVERAGE PRESSURE IN. W.C. (Pg)		3.86				
ACTUAL BAROMETRIC PRESSURE " Hg (Pbar)		25.50				
% O2 (20.95)		20.95				
% N2 (78.09)		78.09				
% CO2 (0.03)		0.03				
% CO (0.0)		0.00				
%A (0.93)		0.93				
% H2O (0.0)		0.00				

CALCULATIONS

	Traverse	Flow Elem.	% Difference
DRY MOLE FRACTION OF STACK (Mfd) =	1.000	1.000	
STACK PRESSURE " Hg (Ps) =	25.78	25.78	
DRY MOLECULAR WT. OF STACK GAS Lb / Lb -Mole(Md)=	28.966	28.966	
WET MOLECULAR WT. OF STACK GAS Lb / Lb -Mole (Ms)=	28.966	28.966	
STACK AREA SQ. FT (As) =	62.500	62.500	
STACK VELOCITY FT/ SEC. (Vs) =	28.68	20.57	
ACTUAL STACK VOLUME (Q acfm) =	107,532	77,148	-28.26
DRY STANDARD VOLUMETRIC STACK FLOW (Q scfmd) =	43,553	31,246	-28.26
WET STANDARD VOLUMETRIC STACK FLOW (Q scfmw) =	43,553	31,246	-28.26
FLOW IN LBS/HR (wet) =	196333	140854	-28.26
FLOW IN LBS/HR (dry) =	196333	140854	-28.26

GAS DENSITY AT ACTUAL CONDITIONS, LBS/CU.FT.(wet)	0.030430
GAS DENSITY AT STANDARD CONDITIONS, LBS/CU.FT. (wet)	0.075132
GAS DENSITY AT STANDARD CONDITIONS, LBS/CU.FT. (dry)	0.075132

<date>

IP7_040215

Port #	Depth#	Probes Vp In.W.C.	Measured Yaw Angle Degrees	Air Temp. °F	P1 - P23 In.W.C.	Pitch Press. P4 - P5 In.W.C.	P1-Patm (Pt) In. W.C.	P23-Patm Ps Choke In w.c.	From Chart P1-Pt/Pt-Ps TP Coeff.	TP Coeff. * Corrected Pv P1-Pt	(P1-Patm) Minus P1-Pt	P23 Corrected In w.c.	Calculated P4-P5/P1-P23 F1	From Chart Pitch Angle Degrees	From Chart Pt-Ps/P1-P23 (F2)^2	Corrected Pv Pt-Ps In.W.C.	Resultant Angle Degrees	Traverse Point Velocity	Probes Point Velocity
1	1	0.039	-22.00	587.4	0.005	0.000	3.88	3.89	0.000	0.000	3.88	3.89	0.000	-0.501	0.980	0.005	22.01	6.57	19.99
	2	0.038	-12.00	603.5	0.009	0.000	3.81	3.81	0.000	0.000	3.81	3.81	0.000	-0.501	0.980	0.009	12.01	9.37	19.89
	3	0.037	18.00	644.9	0.063	-0.033	3.82	3.80	0.002	0.000	3.82	3.80	-0.524	-30.953	1.136	0.072	35.35	22.69	20.00
	4	0.034	20.00	661	0.064	-0.033	3.91	3.86	0.003	0.000	3.91	3.85	-0.516	-31.647	1.150	0.074	36.87	22.73	19.31
	5	0.038	0.00	672.3	0.072	0.000	3.82	3.77	0.000	0.000	3.82	3.76	0.000	-0.501	0.980	0.071	0.50	27.96	20.52
	6	0.038	0.00	675.9	0.078	-0.057	3.78	3.74	0.000	0.000	3.78	3.73	-0.731	-2.573	0.984	0.077	2.57	29.18	20.56
	7	0.036	15.00	681.6	0.071	-0.050	3.91	3.89	-0.000	-0.000	3.91	3.89	-0.704	2.563	0.977	0.069	15.21	26.86	20.05
	8	0.038	14.00	682.9	0.073	-0.054	3.76	3.74	0.000	0.000	3.76	3.74	-0.740	-6.564	0.995	0.073	15.43	27.47	20.62
	9	0.039	14.00	685.1	0.124	-0.064	3.90	3.82	0.003	0.000	3.90	3.81	-0.516	-31.609	1.149	0.142	34.27	33.02	20.91
	10	0.038	15.00	684.9	0.106	-0.012	3.84	3.79	0.000	0.000	3.84	3.78	-0.113	-9.481	1.003	0.106	17.69	32.89	20.64
2	1	0.036	-13.00	662.1	0.034	-0.015	3.94	3.95	0.004	0.000	3.94	3.95	-0.441	-32.242	1.162	0.040	34.50	17.16	19.88
	2	0.039	0.00	666.6	0.041	-0.020	3.81	3.82	0.005	0.000	3.81	3.82	-0.488	-32.980	1.178	0.048	32.98	19.36	20.74
	3	0.038	0.00	670	0.031	-0.018	3.84	3.85	-0.006	-0.000	3.84	3.85	-0.581	-22.087	1.034	0.032	22.10	17.45	20.50
	4	0.038	1.00	673.6	0.045	-0.017	3.82	3.82	-0.003	-0.000	3.82	3.82	-0.378	-27.651	1.081	0.049	27.67	20.57	20.53
	5	0.037	6.00	675.7	0.055	-0.020	3.86	3.85	-0.005	-0.000	3.86	3.85	-0.364	-26.385	1.065	0.059	26.82	22.77	20.28
	6	0.037	-2.00	677.9	0.064	-0.018	3.88	3.86	-0.005	-0.000	3.88	3.86	-0.281	-19.329	1.025	0.066	19.43	25.49	20.30
	7	0.038	5.00	680.5	0.079	-0.023	4.00	3.97	-0.005	-0.000	4.00	3.96	-0.291	-20.089	1.027	0.081	20.68	28.15	20.59
	8	0.035	13.00	682.9	0.096	-0.017	3.97	3.92	-0.001	-0.000	3.97	3.91	-0.177	-12.974	1.013	0.097	18.29	31.31	19.78
	9	0.040	20.00	685.1	0.131	-0.021	3.93	3.84	-0.001	-0.000	3.93	3.82	-0.160	-12.097	1.011	0.132	23.24	35.39	21.17
	10	0.037	25.00	686.8	0.157	-0.011	4.00	3.89	0.000	0.000	4.00	3.87	-0.070	-6.603	0.995	0.156	25.80	37.69	20.38
3	1	0.038	24.00	585.6	0.038	0.005	3.98	3.99	0.000	0.000	3.98	3.99	0.132	13.384	0.991	0.038	27.29	17.45	19.71
	2	0.038	0.00	601.5	0.037	-0.001	3.96	3.97	0.000	0.000	3.96	3.97	-0.027	-3.068	0.985	0.036	3.07	19.42	19.86
	3	0.041	6.00	614.9	0.036	0.001	3.88	3.90	-0.000	-0.000	3.88	3.90	0.028	2.365	0.977	0.035	6.45	19.11	20.77
	4	0.039	5.00	627.9	0.039	-0.001	3.84	3.85	0.000	0.000	3.84	3.85	-0.026	-2.942	0.985	0.038	5.80	20.12	20.38
	5	0.039	8.00	641.4	0.047	0.000	3.82	3.83	0.000	0.000	3.82	3.83	0.000	-0.501	0.980	0.046	8.02	22.06	20.50
	6	0.038	0.00	649.5	0.062	0.000	3.86	3.85	0.000	0.000	3.86	3.85	0.000	-0.501	0.980	0.061	0.50	25.68	20.31
	7	0.040	10.00	658.6	0.073	-0.002	4.04	4.02	0.000	0.000	4.04	4.02	-0.027	-3.101	0.985	0.072	10.47	27.58	20.92
	8	0.039	13.00	664.5	0.094	0.000	4.03	3.98	0.000	0.000	4.03	3.97	0.000	-0.501	0.980	0.092	13.01	31.01	20.71
	9	0.040	26.00	673.8	0.128	-0.002	3.85	3.77	0.000	0.000	3.85	3.76	-0.016	-2.015	0.983	0.126	26.07	33.56	21.07
	10	0.039	25.00	678.3	0.151	-0.003	3.96	3.85	0.000	0.000	3.96	3.83	-0.020	-2.412	0.983	0.148	25.11	36.83	20.84
4	1	0.036	-10.00	623.4	0.034	0.009	3.92	3.93	-0.000	-0.000	3.92	3.93	0.265	20.031	1.016	0.035	22.30	17.71	19.53
	2	0.037	15.00	635.7	0.030	0.013	3.85	3.87	0.000	0.000	3.85	3.87	0.433	19.954	1.016	0.030	24.78	16.41	19.92
	3	0.037	0.00	645.9	0.044	0.006	3.75	3.75	0.000	0.000	3.75	3.75	0.136	13.829	0.993	0.044	13.83	21.11	20.01
	4	0.038	7.00	671.1	0.066	0.009	3.99	3.97	0.000	0.000	3.99	3.97	0.136	13.829	0.993	0.066	15.47	25.95	20.51
	5	0.040	3.00	676.3	0.072	0.014	3.82	3.80	0.000	0.000	3.82	3.80	0.194	18.161	1.007	0.072	18.40	26.94	21.09
	6	0.041	6.00	680.1	0.085	0.016	3.81	3.77	0.000	0.000	3.81	3.76	0.188	17.808	1.005	0.085	18.76	29.24	21.39
	7	0.039	18.00	682.5	0.092	0.010	3.89	3.85	0.000	0.000	3.89	3.84	0.109	11.119	0.986	0.091	21.06	29.72	20.88
	8	0.038	18.00	685.1	0.115	0.012	4.12	4.05	0.000	0.000	4.12	4.04	0.104	10.668	0.985	0.113	20.83	33.30	20.63
	9	0.041	15.00	685.8	0.129	0.010	4.04	3.96	-0.000	-0.000	4.04	3.96	0.078	7.791	0.980	0.126	16.86	36.03	21.44
	10	0.039	20.00	687.1	0.130	0.006	3.96	3.87	-0.000	-0.000	3.96	3.85	0.046	4.349	0.977	0.127	20.45	35.38	20.92
5	1	0.038	4.00	688.2	0.147	-0.007	3.97	3.87	0.000	0.000	3.97	3.85	-0.048	-4.847	0.990	0.145	6.28	40.19	20.66
	2	0.036	5.00	593.7	0.032	0.015	3.98	4.00	-0.001	-0.000	3.98	4.00	0.469	24.501	1.056	0.034	24.98	16.92	19.26
	3	0.038	0.00	630.5	0.048	0.015	3.85	3.85	0.000	0.000	3.85	3.85	0.313	19.377	1.013	0.049	19.38	21.48	20.14
	4	0.040	4.00	643.9	0.091	0.022	3.81	3.76	0.000	0.000	3.81	3.75	0.242	19.846	1.015	0.092	20.23	29.65	20.79
	5	0.041	-2.00	659.4	0.101	0.031	3.97	3.91	0.000	0.000	3.97	3.90	0.307	19.504	1.013	0.102	19.60	31.54	21.19
	6	0.040	5.00	667.2	0.121	0.034	4.04	3.96	0.000	0.000	4.04	3.95	0.281	19.941	1.016	0.123	20.53	34.47	21.00
	7	0.041	2.00	674.9	0.139	0.040	3.82	3.73	0.000	0.000	3.82	3.71	0.288	19.857	1.015	0.141	19.95	37.22	21.34
	8	0.038	5.00	678.6	0.142	0.043	3.83	3.73	0.000	0.000	3.83	3.71	0.303	19.592	1.014	0.144	20.20	37.59	20.58
	9	0.039	5.00	685.5	0.131	0.028	3.96	3.87	0.000	0.000	3.96	3.85	0.214	19.065	1.011	0.132	19.69	36.28	20.91
	10	0.040	7.00	688.2	0.127	0.014	3.75	3.67	0.000	0.000	3.75	3.66	0.110	11.277	0.987	0.125	13.25	36.53	21.21
6	1	0.039	5.00	688.9	0.148	0.001	3.85	3.75	-0.000	-0.000	3.85	3.73	0.007	0.178	0.979	0.145	5.00	40.21	20.94
	2	0.039	-5.00	650.4	0.073	0.011	3.90	3.87	0.000	0.000	3.90	3.86	0.151	15.094	0.996	0.073	15.88	27.04	20.59
	3	0.040	-5.00	661.9	0.114	0.026	4.05	3.97	0.000	0.000	4.05	3.96	0.228	19.543	1.013	0.116	20.15	33.43	20.95
	4	0.040	7.00	672.6	0.119	0.049	4.11	4.03	0.000	0.000	4.11	4.02	0.412	18.627	1.009	0.120	19.85	34.30	21.05
	5	0.039	10.00	678.9	0.171	0.055	4.02	3.88	0.000	0.000	4.02	3.86	0.322	19.154	1.011	0.173	21.52	40.84	20.85
	6	0.038	0.00	682.7	0.192	0.069	4.05	3.90	0.000	0.000	4.05	3.87	0.359	18.275	1.007	0.193	18.28	44.16	20.61
	7	0.040	-2.00	685	0.183	0.065	4.00	3.87	0.000	0.000	4.00	3.85	0.355	18.352	1.008	0.184	18.46	43.12	21.17
	8	0.040	3.00	686.9	0.162	0.063	4.15	4.03	0.000	0.000	4.15	4.01	0.389	18.089	1.006	0.163	18.33	40.60	21.18
	9	0.039	3.00	688.1	0.150	0.045	4.00	3.89	0.000	0.000	4.00	3.87	0.300	19.649	1.014	0.152	19.87	38.88	20.93
	10	0.039	1.00	690.3	0.128	0.007	3.99	3.90	-0.000	-0.000	3.99	3.88	0.055	5.283	0.977	0.125	5.38	37.36	20.96

Avg. Duct Static = 3.86

Yaw Avg. =6.28	Average Temp.	Pitch Avg. =2.24	Result Angle Avg. = 18.48	Traverse Avg. Velocity in ft/s	Probes

Std. Dev. = 9.78	663	Std. Dev. = 16.75	Std. Dev. = 10.09	28.68	20.57

IP7_040216

IP7_040217

3D PROBE WORK SHEET

PROJECT:---
Test Run:------
INPUTS

STD. TEMP. DEGREES F (t std)		68				
STD. BAROMETRIC PRESSURE " Hg (Pstd)		29.92				
DUCT SIZE (D)	Traverse	75.000	120.000	75.000	120.000	Flow Element
AVERAGE TEMPERATURE DEGREES F (ts)		676				
AVERAGE PRESSURE IN. W.C. (Pg)		3.09				
ACTUAL BAROMETRIC PRESSURE " Hg (Pbar)		25.50				
% O2 (20.95)		20.95				
% N2 (78.09)		78.09				
% CO2 (0.03)		0.03				
% CO (0.0)		0.00				
%A (0.93)		0.93				
% H2O (0.0)		0.00				

CALCULATIONS

	Traverse	Flow Elem.	% Difference
DRY MOLE FRACTION OF STACK (Mfd) =	1.000	1.000	
STACK PRESSURE " Hg (Ps) =	25.73	25.73	
DRY MOLECULAR WT. OF STACK GAS Lb / Lb -Mole(Md)=	28.966	28.966	
WET MOLECULAR WT. OF STACK GAS Lb / Lb -Mole (Ms)=	28.966	28.966	
STACK AREA SQ. FT (As) =	62.500	62.500	
STACK VELOCITY FT/ SEC. (Vs) =	39.16	35.53	
ACTUAL STACK VOLUME (Q acfm) =	146,852	133,239	-9.27
DRY STANDARD VOLUMETRIC STACK FLOW (Q scfmd) =	58,675	53,235	-9.27
WET STANDARD VOLUMETRIC STACK FLOW (Q scfmw) =	58,675	53,235	-9.27
FLOW IN LBS/HR (wet) =	264502	239979	-9.27
FLOW IN LBS/HR (dry) =	264502	239979	-9.27

GAS DENSITY AT ACTUAL CONDITIONS, LBS/CU.FT.(wet)	0.030019
GAS DENSITY AT STANDARD CONDITIONS, LBS/CU.FT. (wet)	0.075132
GAS DENSITY AT STANDARD CONDITIONS, LBS/CU.FT. (dry)	0.075132

<date>

IP7_040218

Port #	Depth#	Probes Vp In.W.C.	Measured Yaw Angle Degrees	Air Temp. °F	P1 - P23 In.W.C.	Pitch Press. P4 - P5 In.W.C.	P1-Patm (Pt) In.W.C.	P23-Patm Ps Choke In w.c.	From Chart P1-Pt/Pt-Ps TP Coeff.	TP Coeff. * Corrected Pv P1-Pt	(P1-Patm) Minus P1-Pt	P23 Corrected In w.c.	Calculated P4-P5/P1-P23 F1	From Chart Pitch Angle Degrees	From Chart Pt-Ps/P1-P23 (F2)^2	Corrected Pv Pt-Ps In.W.C.	Resultant Angle Degrees	Traverse Point Velocity	Probes Point Velocity
1	1	0.103	-12.00	574.8	0.011	-0.002	3.03	3.07	-0.001	-0.000	3.03	3.08	-0.182	-13.221	1.013	0.011	17.78	10.13	32.33
	2	0.101	5.00	598.5	0.008	0.000	2.96	3.00	0.000	0.000	2.96	3.01	0.000	-0.501	0.980	0.008	5.02	8.99	32.38
	3	0.102	8.00	625.5	0.049	0.000	2.92	2.92	0.000	0.000	2.92	2.92	0.000	-0.501	0.980	0.048	8.02	22.39	32.96
	4	0.107	5.00	643.2	0.095	-0.053	3.03	2.98	-0.005	-0.000	3.03	2.97	-0.558	-26.478	1.067	0.101	26.91	29.53	34.03
	5	0.106	2.00	656.7	0.149	-0.085	3.20	3.10	-0.006	-0.001	3.20	3.08	-0.570	-24.186	1.046	0.156	24.26	37.66	34.07
	6	0.102	0.00	672	0.131	-0.083	3.04	2.95	0.000	0.000	3.04	2.93	-0.634	-8.927	1.002	0.131	8.93	37.72	33.66
	7	0.103	0.00	678.4	0.163	-0.082	3.11	3.00	0.004	0.001	3.11	2.98	-0.503	-32.439	1.166	0.190	32.44	38.89	33.92
	8	0.102	10.00	683.9	0.146	-0.072	3.07	2.97	0.005	0.001	3.07	2.95	-0.493	-32.841	1.175	0.172	34.17	36.30	33.83
	9	0.100	18.00	691.6	0.214	-0.074	3.26	3.09	-0.006	-0.001	3.26	3.06	-0.346	-24.767	1.050	0.225	30.28	43.51	33.61
	10	0.106	5.00	690.9	0.048	0.000	2.98	2.98	0.000	0.000	2.98	2.98	0.000	-0.501	0.980	0.047	5.02	22.95	34.59
2	1	0.110	-5.00	660.9	0.020	-0.012	3.07	3.09	-0.004	-0.000	3.07	3.09	-0.600	-17.620	1.022	0.020	18.29	14.23	34.77
	2	0.115	-8.00	670.8	0.034	0.000	3.01	3.03	0.000	0.000	3.01	3.03	0.000	-0.501	0.980	0.033	8.02	19.03	35.71
	3	0.114	-2.00	678.8	0.087	-0.033	3.02	2.98	-0.003	-0.000	3.02	2.97	-0.379	-27.786	1.083	0.094	27.85	28.68	35.69
	4	0.111	6.00	685.5	0.104	-0.028	3.27	3.21	-0.004	-0.000	3.27	3.20	-0.269	-18.447	1.023	0.106	20.05	32.48	35.31
	5	0.113	-6.00	690.4	0.102	-0.030	3.03	2.98	-0.005	-0.001	3.03	2.97	-0.294	-20.324	1.028	0.105	21.16	32.08	35.71
	6	0.113	0.00	692.7	0.122	-0.036	3.03	2.95	-0.006	-0.001	3.03	2.94	-0.295	-20.401	1.028	0.125	20.40	35.30	35.75
	7	0.116	7.00	696.5	0.176	-0.045	3.25	3.12	-0.004	-0.001	3.25	3.10	-0.256	-17.510	1.022	0.180	18.82	42.74	36.27
	8	0.114	5.00	698	0.172	-0.041	3.40	3.27	-0.003	-0.001	3.40	3.25	-0.238	-16.394	1.020	0.175	17.12	42.64	35.97
	9	0.109	10.00	698.8	0.183	-0.023	3.19	3.05	-0.000	-0.000	3.19	3.03	-0.126	-10.212	1.006	0.184	14.26	44.33	35.20
	10	0.112	25.00	700.4	0.233	-0.020	3.33	3.14	0.000	0.000	3.33	3.11	-0.086	-7.726	0.998	0.233	26.09	46.20	35.70
3	1	0.113	2.00	630.2	0.002	-0.001	2.99	3.04	0.005	0.000	2.99	3.05	-0.500	-32.584	1.169	0.002	32.64	4.21	34.76
	2	0.115	-5.00	647	0.058	-0.011	3.00	2.99	-0.001	-0.000	3.00	2.99	-0.190	-13.634	1.014	0.059	14.51	24.47	35.34
	3	0.111	12.00	664.7	0.073	-0.005	2.84	2.81	0.000	0.000	2.84	2.80	-0.068	-6.486	0.994	0.073	13.62	27.51	35.00
	4	0.112	-4.00	672.9	0.096	-0.007	2.91	2.86	0.000	0.000	2.91	2.85	-0.073	-6.812	0.995	0.096	7.90	32.29	35.29
	5	0.112	5.00	678.9	0.090	-0.002	2.92	2.87	0.000	0.000	2.92	2.86	-0.022	-2.630	0.984	0.089	5.65	31.31	35.38
	6	0.112	5.00	684.7	0.126	-0.002	3.15	3.07	0.000	0.000	3.15	3.06	-0.016	-2.039	0.983	0.124	5.40	37.12	35.46
	7	0.115	8.00	694.3	0.197	0.004	3.15	2.99	-0.000	-0.000	3.15	2.96	0.020	1.576	0.977	0.193	8.15	46.22	36.09
	8	0.117	10.00	696.9	0.243	0.000	3.19	2.99	0.000	0.000	3.19	2.96	0.000	-0.501	0.980	0.238	10.01	51.19	36.44
	9	0.112	10.00	697.4	0.274	0.014	3.25	3.01	-0.000	-0.000	3.25	2.97	0.051	4.889	0.977	0.268	11.12	54.10	35.66
	10	0.112	28.00	614.9	0.042	0.005	3.18	3.18	0.000	0.000	3.18	3.18	0.119	12.168	0.989	0.042	30.33	18.05	34.36
4	1	0.116	10.00	642.3	0.065	0.003	3.20	3.18	-0.000	-0.000	3.20	3.18	0.046	4.349	0.977	0.064	10.90	25.73	35.41
	2	0.115	10.00	659.9	0.133	0.013	3.31	3.22	-0.000	-0.000	3.31	3.20	0.098	9.973	0.984	0.131	14.09	36.77	35.53
	3	0.117	8.00	674.4	0.148	0.018	3.23	3.12	0.000	0.000	3.23	3.10	0.122	12.423	0.989	0.146	14.74	39.03	36.08
	4	0.114	6.00	682.3	0.122	0.029	3.04	2.96	0.000	0.000	3.04	2.95	0.238	19.771	1.015	0.124	20.63	34.86	35.74
	5	0.117	-3.00	688.4	0.155	0.024	2.58	2.47	0.000	0.000	2.58	2.45	0.155	15.439	0.997	0.155	15.72	40.20	36.33
	6	0.112	4.00	691.6	0.190	0.025	3.32	3.17	0.000	0.000	3.32	3.14	0.132	13.384	0.991	0.188	13.96	44.76	35.56
	7	0.115	7.00	694.3	0.229	0.028	3.37	3.18	0.000	0.000	3.37	3.15	0.122	12.487	0.989	0.227	14.29	49.07	36.08
	8	0.119	7.00	696.9	0.259	0.028	3.39	3.17	0.000	0.000	3.39	3.13	0.108	11.058	0.986	0.255	13.06	52.44	36.74
	9	0.118	2.00	698.3	0.275	0.000	3.49	3.25	0.000	0.000	3.49	3.21	0.000	-0.501	0.980	0.269	2.06	55.28	36.61
	10	0.118	23.00	641.3	0.138	0.012	3.38	3.28	-0.000	-0.000	3.38	3.26	0.087	8.817	0.982	0.135	24.55	34.79	35.69
5	1	0.114	5.00	669	0.166	0.024	3.18	3.05	0.000	0.000	3.18	3.03	0.145	14.568	0.995	0.165	15.38	41.23	35.53
	2	0.114	2.00	683.1	0.226	0.050	3.31	3.12	0.000	0.000	3.31	3.09	0.221	19.335	1.012	0.229	19.43	47.76	35.75
	3	0.116	0.00	689.4	0.242	0.054	3.49	3.28	0.000	0.000	3.49	3.24	0.223	19.397	1.013	0.245	19.40	49.57	36.15
	4	0.116	-2.00	692.1	0.220	0.074	3.39	3.21	0.000	0.000	3.39	3.18	0.336	18.781	1.010	0.222	18.88	47.39	36.20
	5	0.114	5.00	694.5	0.256	0.067	3.30	3.07	-0.000	-0.000	3.30	3.03	0.262	20.028	1.016	0.260	20.62	50.80	35.93
	6	0.119	3.00	696.1	0.263	0.069	3.30	3.07	-0.000	-0.000	3.30	3.03	0.262	20.029	1.016	0.267	20.24	51.65	36.74
	7	0.116	10.00	697.2	0.246	0.060	3.36	3.15	0.000	0.000	3.36	3.11	0.244	19.880	1.015	0.250	22.16	49.31	36.28
	8	0.118	15.00	697.8	0.223	0.032	3.46	3.28	0.000	0.000	3.46	3.25	0.143	14.473	0.994	0.222	20.73	46.92	36.60
	9	0.114	10.00	698.1	0.244	0.012	3.44	3.23	-0.000	-0.000	3.44	3.19	0.049	4.680	0.977	0.238	11.03	51.07	35.98
	10	0.118	8.00	648.2	0.242	0.022	3.59	3.38	-0.000	-0.000	3.59	3.34	0.091	9.243	0.983	0.238	12.20	49.67	35.80
6	1	0.121	-3.00	668.6	0.281	0.038	3.55	3.30	0.000	0.000	3.55	3.26	0.135	13.725	0.992	0.279	14.04	53.88	36.59
	2	0.115	-5.00	680.4	0.243	0.063	3.64	3.43	-0.000	-0.000	3.64	3.39	0.259	20.022	1.016	0.247	20.61	49.17	35.85
	3	0.118	-3.00	688.4	0.262	0.071	3.75	3.52	-0.000	-0.000	3.75	3.48	0.271	20.016	1.016	0.266	20.23	51.35	36.43
	4	0.124	-5.00	693	0.238	0.121	3.59	3.39	0.001	0.000	3.59	3.36	0.508	34.104	1.288	0.307	34.42	48.55	37.43
	5	0.123	0.00	695.3	0.287	0.109	3.54	3.29	0.000	0.000	3.54	3.25	0.380	18.063	1.006	0.289	18.06	54.37	37.32
	6	0.119	3.00	696.6	0.261	0.091	3.53	3.30	0.000	0.000	3.53	3.26	0.349	18.489	1.008	0.263	18.72	51.73	36.73
	7	0.121	0.00	697.4	0.218	0.062	3.55	3.37	0.000	0.000	3.55	3.34	0.284	19.902	1.015	0.221	19.90	47.12	37.05
	8	0.118	2.00	697.9	0.233	0.017	3.65	3.45	-0.000	-0.000	3.65	3.42	0.073	7.292	0.980	0.228	7.56	50.44	36.59
	9	0.118	5.00	679.5	0.262	0.001	3.46	3.23	0.000	0.000	3.46	3.19	0.004	0.119	0.979	0.257	5.00	53.33	36.31
	10																		

Avg. Duct Static = 3.09

Yaw Avg. =4.58 | Average Temp.

Pitch Avg. =0.88 | Resul Angle Avg. =17.07 | Traverse Avg. Velocity in ft/s | Probes

Std. Dev. = 7.63	676	Std. Dev. = 16.76	Std. Dev. = 7.96	39.16	35.53

IP7_040219

IP7_040220

3D PROBE WORK SHEET

PROJECT:---
Test Run:------
INPUTS

STD. TEMP. DEGREES F (t std)		68				
STD. BAROMETRIC PRESSURE " Hg (Pstd)		29.92				
DUCT SIZE (D)	Traverse	75.000	120.000	75.000	120.000	Flow Element
AVERAGE TEMPERATURE DEGREES F (ts)		662				
AVERAGE PRESSURE IN. W.C. (Pg)		2.08				
ACTUAL BAROMETRIC PRESSURE " Hg (Pbar)		25.50				
% O2 (20.95)		20.95				
% N2 (78.09)		78.09				
% CO2 (0.03)		0.03				
% CO (0.0)		0.00				
%A (0.93)		0.93				
% H2O (0.0)		0.00				

CALCULATIONS

	Traverse	Flow Elem.	% Difference
DRY MOLE FRACTION OF STACK (Mfd) =	1.000	1.000	
STACK PRESSURE " Hg (Ps) =	25.65	25.65	
DRY MOLECULAR WT. OF STACK GAS Lb / Lb -Mole(Md)=	28.966	28.966	
WET MOLECULAR WT. OF STACK GAS Lb / Lb -Mole (Ms)=	28.966	28.966	
STACK AREA SQ. FT (As) =	62.500	62.500	
STACK VELOCITY FT/ SEC. (Vs) =	45.75	43.65	
ACTUAL STACK VOLUME (Q acfm) =	171,580	163,672	-4.61
DRY STANDARD VOLUMETRIC STACK FLOW (Q scfmd) =	69,223	66,033	-4.61
WET STANDARD VOLUMETRIC STACK FLOW (Q scfmw) =	69,223	66,033	-4.61
FLOW IN LBS/HR (wet) =	312051	297671	-4.61
FLOW IN LBS/HR (dry) =	312051	297671	-4.61

GAS DENSITY AT ACTUAL CONDITIONS, LBS/CU.FT.(wet)	0.030312
GAS DENSITY AT STANDARD CONDITIONS, LBS/CU.FT. (wet)	0.075132
GAS DENSITY AT STANDARD CONDITIONS, LBS/CU.FT. (dry)	0.075132

<date>

IP7_040221

Port #	Depth#	Probes Vp In. W.C.	Measured Yaw Angle Degrees	Air Temp. °F	P1 - P23 In.W.C.	Pitch Press. P4 - P5 In.W.C.	P1-Patm (Pt) In. W.C.	P23-Patm Ps Choke In w.c.	From Chart P1-Pt/Pt-Ps TP Coeff.	TP Coeff. * Corrected Pv P1-Pt	(P1-Patm) Minus P1-Pt	P23 Corrected In w.c.	Calculated P4-P5/P1-P23 F1	From Chart Pitch Angle Degrees	From Chart Pt-Ps/P1-P23 (F2)^2	Corrected Pv Pt-Ps In.W.C.	Resultant Angle Degrees	Traverse Point Velocity	Probes Point Velocity
1	1	0.164	-10.00	607.4	0.019	0.005	2.07	2.06	-0.000	-0.000	2.07	2.06	0.263	20.030	1.016	0.019	22.30	13.17	41.50
	2	0.164	-8.00	617.5	0.065	-0.012	2.06	2.01	-0.001	-0.000	2.06	2.00	-0.185	-13.368	1.014	0.066	15.54	25.46	41.69
	3	0.167	4.00	635.7	0.073	-0.046	1.87	1.81	0.000	0.000	1.87	1.80	-0.630	-9.833	1.005	0.073	10.61	27.64	42.44
	4	0.165	14.00	647.1	0.097	-0.058	1.90	1.82	-0.004	-0.000	1.90	1.81	-0.598	-18.124	1.023	0.099	22.76	30.32	42.40
	5	0.176	5.00	657.3	0.121	0.000	2.03	1.92	0.000	0.000	2.03	1.90	0.000	-0.501	0.980	0.119	5.02	35.96	43.99
	6	0.175	-2.00	664.5	0.161	-0.081	2.05	1.90	0.004	0.001	2.05	1.87	-0.503	-32.437	1.166	0.188	32.49	38.45	44.01
	7	0.167	6.00	669.3	0.202	-0.094	2.06	1.87	0.005	0.001	2.06	1.84	-0.465	-33.025	1.179	0.238	33.50	42.90	43.08
	8	0.165	10.00	672.6	0.234	-0.086	2.13	1.90	-0.004	-0.001	2.13	1.86	-0.368	-26.736	1.069	0.250	28.42	46.45	42.89
	9	0.170	18.00	676.2	0.280	-0.098	2.32	2.05	-0.005	-0.002	2.32	2.00	-0.350	-25.148	1.053	0.295	30.58	49.43	43.59
	10	0.171	11.00	678.2	0.271	-0.017	2.33	2.07	0.000	0.000	2.33	2.03	-0.063	-6.050	0.993	0.269	12.54	53.59	43.76
2	1	0.173	8.00	613.2	0.029	-0.003	2.11	2.10	0.000	0.000	2.11	2.10	-0.103	-8.880	1.002	0.029	11.93	17.13	42.73
	2	0.172	-15.00	640.5	0.030	-0.021	2.24	2.22	-0.000	-0.000	2.24	2.22	-0.700	2.657	0.977	0.029	15.23	17.18	43.14
	3	0.165	3.00	649.9	0.057	-0.020	2.26	2.22	-0.005	-0.000	2.26	2.21	-0.351	-25.228	1.054	0.060	25.39	23.13	42.43
	4	0.167	7.00	660.2	0.089	-0.017	2.43	2.35	-0.001	-0.000	2.43	2.34	-0.191	-13.706	1.014	0.090	15.36	30.40	42.88
	5	0.173	0.00	665.1	0.083	-0.011	2.27	2.20	-0.000	-0.000	2.27	2.19	-0.133	-10.599	1.007	0.084	10.60	29.88	43.75
	6	0.173	-3.00	670	0.149	-0.022	2.27	2.13	-0.000	-0.000	2.27	2.11	-0.148	-11.426	1.009	0.150	11.81	40.01	43.85
	7	0.175	-8.00	675.6	0.211	-0.043	2.23	2.03	-0.002	-0.000	2.23	2.00	-0.204	-14.392	1.016	0.214	16.92	46.81	44.22
	8	0.177	3.00	678.6	0.242	-0.033	2.43	2.20	-0.000	-0.000	2.43	2.16	-0.136	-10.812	1.007	0.244	11.22	51.24	44.52
	9	0.172	10.00	680.7	0.293	-0.026	2.60	2.32	0.000	0.000	2.60	2.27	-0.086	-7.690	0.998	0.292	12.59	55.89	43.92
	10	0.172	23.00	683.7	0.377	-0.014	2.50	2.13	0.000	0.000	2.50	2.07	-0.037	-3.961	0.987	0.372	23.32	59.42	43.99
3	1	0.178	3.00	603.6	0.029	-0.005	2.24	2.23	-0.001	-0.000	2.24	2.23	-0.172	-12.730	1.012	0.029	13.07	17.07	43.14
	2	0.178	5.00	622.9	0.041	-0.006	2.11	2.08	-0.000	-0.000	2.11	2.07	-0.146	-11.356	1.009	0.041	12.39	20.50	43.54
	3	0.178	2.00	654.9	0.099	-0.003	2.38	2.29	0.000	0.000	2.38	2.27	-0.030	-3.361	0.986	0.098	3.91	32.63	44.17
	4	0.173	5.00	670.5	0.144	0.003	2.24	2.11	-0.000	-0.000	2.24	2.09	0.021	1.631	0.977	0.141	5.26	39.39	43.86
	5	0.178	0.00	674.5	0.130	0.014	2.23	2.12	0.000	0.000	2.23	2.10	0.108	11.015	0.986	0.128	11.02	37.12	44.57
	6	0.175	-10.00	677.6	0.182	-0.004	2.35	2.18	0.000	0.000	2.35	2.15	-0.022	-2.607	0.984	0.179	10.33	44.03	44.25
	7	0.174	-2.00	680.3	0.226	-0.004	2.54	2.32	0.000	0.000	2.54	2.28	-0.018	-2.210	0.983	0.222	2.98	49.83	44.16
	8	0.174	4.00	682.2	0.268	0.006	2.47	2.21	-0.000	-0.000	2.47	2.17	0.022	1.795	0.977	0.262	4.38	54.08	44.21
	9	0.173	12.00	684	0.320	0.005	2.42	2.10	-0.000	-0.000	2.42	2.04	0.016	1.088	0.978	0.313	12.05	58.03	44.12
	10	0.173	24.00	685.2	0.396	0.004	2.38	1.99	-0.000	-0.000	2.38	1.92	0.010	0.518	0.978	0.387	24.01	60.36	44.15
4	1	0.173	12.00	587.1	0.058	-0.002	2.07	2.03	0.000	0.000	2.07	2.02	-0.034	-3.730	0.987	0.057	12.56	23.70	42.21
	2	0.174	7.00	606.7	0.080	0.004	2.15	2.08	-0.000	-0.000	2.15	2.07	0.050	4.769	0.977	0.078	8.46	28.33	42.73
	3	0.169	10.00	624	0.162	0.012	2.49	2.34	-0.000	-0.000	2.49	2.31	0.074	7.414	0.980	0.159	12.43	40.16	42.43
	4	0.174	9.00	651.6	0.219	0.019	2.20	1.99	-0.000	-0.000	2.20	1.95	0.087	8.796	0.982	0.215	12.56	47.33	43.62
	5	0.171	5.00	659.8	0.183	0.025	2.18	2.01	0.000	0.000	2.18	1.98	0.137	13.852	0.993	0.182	14.71	43.27	43.40
	6	0.173	0.00	666.5	0.237	0.023	2.19	1.96	-0.000	-0.000	2.19	1.92	0.097	9.899	0.984	0.233	9.90	50.08	43.79
	7	0.173	3.00	672.6	0.281	0.028	2.28	2.00	0.000	0.000	2.28	1.95	0.100	10.174	0.984	0.277	10.60	54.57	43.91
	8	0.169	12.00	679.2	0.322	0.035	2.55	2.23	0.000	0.000	2.55	2.17	0.109	11.119	0.986	0.318	16.30	57.25	43.51
	9	0.178	11.00	682.5	0.344	0.023	2.35	2.02	-0.000	-0.000	2.35	1.96	0.067	6.622	0.979	0.337	12.82	59.99	44.73
	10	0.169	10.00	684.3	0.377	0.003	2.40	2.03	-0.000	-0.000	2.40	1.97	0.008	0.300	0.979	0.369	10.00	63.47	43.62
5	1	0.168	0.00	628.8	0.189	0.011	2.45	2.28	-0.000	-0.000	2.45	2.25	0.058	5.669	0.978	0.185	5.67	44.26	42.41
	2	0.175	1.00	644.6	0.209	0.043	2.33	2.13	0.000	0.000	2.33	2.10	0.206	18.726	1.009	0.211	18.75	45.33	43.60
	3	0.176	5.00	666.6	0.363	0.049	2.37	2.02	0.000	0.000	2.37	1.96	0.135	13.702	0.992	0.360	14.57	61.16	44.17
	4	0.176	0.00	673.2	0.331	0.049	2.41	2.09	0.000	0.000	2.41	2.03	0.148	14.868	0.995	0.329	14.87	58.57	44.29
	5	0.174	3.00	676.7	0.318	0.068	2.55	2.24	0.000	0.000	2.55	2.19	0.214	19.068	1.011	0.321	19.29	56.58	44.10
	6	0.174	0.00	682.2	0.376	0.075	2.49	2.12	0.000	0.000	2.49	2.06	0.199	18.424	1.008	0.379	18.42	61.91	44.21
	7	0.176	2.00	684.8	0.372	0.076	2.40	2.04	0.000	0.000	2.40	1.98	0.204	18.659	1.009	0.375	18.76	61.57	44.52
	8	0.173	10.00	687.3	0.365	0.070	2.42	2.07	0.000	0.000	2.42	2.01	0.192	18.013	1.006	0.367	20.52	60.30	44.19
	9	0.177	12.00	688.8	0.318	0.026	2.47	2.17	-0.000	-0.000	2.47	2.12	0.082	8.253	0.981	0.312	14.53	57.47	44.72
	10	0.173	12.00	689.8	0.364	0.006	2.68	2.33	-0.000	-0.000	2.68	2.27	0.016	1.177	0.978	0.356	12.06	62.02	44.22
6	1	0.175	-2.00	626	0.323	0.012	2.50	2.21	-0.000	-0.000	2.50	2.16	0.037	3.371	0.977	0.315	3.92	57.91	43.23
	2	0.172	5.00	649.2	0.263	0.019	2.59	2.35	-0.000	-0.000	2.59	2.31	0.072	7.213	0.979	0.258	8.77	52.37	43.30
	3	0.174	3.00	659.8	0.339	0.046	2.59	2.27	0.000	0.000	2.59	2.21	0.136	13.767	0.992	0.336	14.08	59.03	43.77
	4	0.171	5.00	669.3	0.320	0.048	2.39	2.10	0.000	0.000	2.39	2.05	0.150	15.036	0.996	0.319	15.83	57.24	43.58
	5	0.174	3.00	675.5	0.350	0.084	2.45	2.12	0.000	0.000	2.45	2.06	0.240	19.815	1.015	0.355	20.03	59.18	44.08
	6	0.179	0.00	680.4	0.372	0.094	2.46	2.11	0.000	0.000	2.46	2.05	0.253	19.983	1.016	0.378	19.98	61.19	44.81
	7	0.176	4.00	684.1	0.332	0.083	2.43	2.13	0.000	0.000	2.43	2.08	0.250	19.957	1.016	0.337	20.34	57.76	44.50
	8	0.174	7.00	686.7	0.284	0.064	2.42	2.17	0.000	0.000	2.42	2.13	0.225	19.465	1.013	0.288	20.64	53.30	44.30
	9	0.173	3.00	688.1	0.293	0.008	2.33	2.07	-0.000	-0.000	2.33	2.03	0.027	2.315	0.977	0.286	3.79	56.73	44.20
	10	0.177	2.00	688.9	0.356	-0.007	2.43	2.11											

Avg. Duct Static = 2.08

Yaw Avg. = 4.37 | Average Temp.

Pitch Avg. = 1.04 | Resul Angle Avg. = 14.79 | Traverse Avg. Velocity in ft/s | Probes

<date>

Std. Dev. =7.33	662	Std. Dev. =14.07	Std. Dev. =7.05	45.75	43.65

IP7_040222

IP7_040223

3D PROBE WORK SHEET

PROJECT:---
Test Run:------
INPUTS

STD. TEMP. DEGREES F (t std)		68				
STD. BAROMETRIC PRESSURE " Hg (Pstd)		29.92				
DUCT SIZE (D)	Traverse	75.000	120.000	75.000	120.000	Flow Element
AVERAGE TEMPERATURE DEGREES F (ts)		660				
AVERAGE PRESSURE IN. W.C. (Pg)		3.32				
ACTUAL BAROMETRIC PRESSURE " Hg (Pbar)		25.50				
% O2 (20.95)		20.95				
% N2 (78.09)		78.09				
% CO2 (0.03)		0.03				
% CO (0.0)		0.00				
%A (0.93)		0.93				
% H2O (0.0)		0.00				

CALCULATIONS

	Traverse	Flow Elem.	% Difference
DRY MOLE FRACTION OF STACK (Mfd) =	1.000	1.000	
STACK PRESSURE " Hg (Ps) =	25.74	25.74	
DRY MOLECULAR WT. OF STACK GAS Lb / Lb -Mole(Md)=	28.966	28.966	
WET MOLECULAR WT. OF STACK GAS Lb / Lb -Mole (Ms)=	28.966	28.966	
STACK AREA SQ. FT (As) =	62.500	62.500	
STACK VELOCITY FT/ SEC. (Vs) =	27.51	22.55	
ACTUAL STACK VOLUME (Q acfm) =	103,156	84,555	-18.03
DRY STANDARD VOLUMETRIC STACK FLOW (Q scfmd) =	41,845	34,300	-18.03
WET STANDARD VOLUMETRIC STACK FLOW (Q scfmw) =	41,845	34,300	-18.03
FLOW IN LBS/HR (wet) =	188634	154621	-18.03
FLOW IN LBS/HR (dry) =	188634	154621	-18.03

GAS DENSITY AT ACTUAL CONDITIONS, LBS/CU.FT.(wet)	0.030478
GAS DENSITY AT STANDARD CONDITIONS, LBS/CU.FT. (wet)	0.075132
GAS DENSITY AT STANDARD CONDITIONS, LBS/CU.FT. (dry)	0.075132

<date>

IP7_040224

Port #	Depth#	Probes Vp In.W.C.	Measured Yaw Angle Degrees	Air Temp. °F	P1-P23 In.W.C.	Pitch Press. P4 - P5 In.W.C.	P1-Patm (Pt) In.W.C.	P23-Patm Ps Choke In w.c.	From Chart P1-Pt/Pt-Ps TP Coeff.	TP Coeff. * Corrected Pv P1-Pt	(P1-Patm) Minus P1-Pt	P23 Corrected In w.c.	Calculated P4-P5/P1-P23 F1	From Chart Pitch Angle Degrees	From Chart Pt-Ps/P1-P23 (F2)^2	Corrected Pv Pt-Ps In.W.C.	Resultant Angle Degrees	Traverse Point Velocity	Probes Point Velocity
1	1	0.048	-8.00	615.9	0.032	0.001	3.26	3.28	-0.000	-0.000	3.26	3.28	0.031	2.736	0.977	0.031	8.45	17.96	22.50
	2	0.051	-15.00	627.4	0.025	-0.001	3.33	3.35	0.000	0.000	3.33	3.35	-0.040	-4.207	0.988	0.025	15.57	15.63	23.31
	3	0.049	3.00	636.5	0.064	0.005	3.48	3.47	-0.000	-0.000	3.48	3.47	0.078	7.857	0.980	0.063	8.41	25.68	22.94
	4	0.046	0.00	645.4	0.030	-0.011	3.43	3.46	-0.004	-0.000	3.43	3.47	-0.367	-26.659	1.069	0.032	26.66	16.65	22.32
	5	0.048	-2.00	653.6	0.059	-0.025	3.24	3.23	0.002	0.000	3.24	3.23	-0.424	-31.262	1.142	0.067	31.32	23.17	22.89
	6	0.050	-3.00	660.5	0.076	-0.031	3.32	3.30	0.000	0.000	3.32	3.30	-0.408	-30.149	1.121	0.085	30.28	26.41	23.43
	7	0.052	-2.00	666.4	0.100	-0.044	3.30	3.25	0.004	0.000	3.30	3.24	-0.440	-32.186	1.161	0.116	32.24	30.29	23.96
	8	0.046	0.00	672.9	0.092	-0.037	3.23	3.19	-0.000	-0.000	3.23	3.18	-0.402	-29.706	1.113	0.102	29.71	29.29	22.60
	9	0.050	5.00	681.1	0.112	-0.021	3.45	3.39	-0.001	-0.000	3.45	3.38	-0.188	-13.520	1.014	0.114	14.40	34.51	23.64
	10	0.047	0.00	682.8	0.029	0.000	3.39	3.41	0.000	0.000	3.39	3.41	0.000	-0.501	0.980	0.028	0.50	17.84	22.94
2	1	0.048	15.00	623.3	0.030	0.007	3.19	3.22	0.000	0.000	3.19	3.23	0.233	19.677	1.014	0.030	24.56	16.35	22.58
	2	0.045	0.00	632.4	0.024	0.005	3.21	3.24	0.000	0.000	3.21	3.25	0.208	18.841	1.010	0.024	18.84	15.25	21.95
	3	0.048	0.00	638.3	0.027	0.000	3.21	3.24	0.000	0.000	3.21	3.25	0.000	-0.501	0.980	0.026	0.50	16.88	22.73
	4	0.048	-11.00	647	0.029	-0.008	3.12	3.15	-0.004	-0.000	3.12	3.16	-0.276	-18.928	1.024	0.030	21.79	16.67	22.83
	5	0.046	-4.00	656.8	0.045	-0.009	3.21	3.22	-0.002	-0.000	3.21	3.22	-0.200	-14.187	1.015	0.046	14.73	21.63	22.44
	6	0.047	0.00	662.7	0.056	-0.013	3.24	3.24	-0.003	-0.000	3.24	3.24	-0.232	-16.014	1.019	0.057	16.01	24.09	22.74
	7	0.047	-5.00	669	0.071	-0.013	3.43	3.42	-0.001	-0.000	3.43	3.42	-0.183	-13.288	1.013	0.072	14.18	27.35	22.80
	8	0.047	-5.00	675.6	0.086	-0.015	3.38	3.35	-0.001	-0.000	3.38	3.34	-0.174	-12.834	1.012	0.087	13.76	30.23	22.87
	9	0.047	14.00	682.2	0.110	-0.013	3.30	3.24	0.000	0.000	3.30	3.23	-0.118	-9.777	1.004	0.110	17.02	33.63	22.94
	10	0.044	10.00	685.5	0.097	0.078	3.23	3.18	-0.006	-0.001	3.23	3.17	0.804	23.745	1.043	0.101	25.65	30.39	22.23
3	1	0.047	20.00	613.7	0.038	0.004	3.31	3.33	0.000	0.000	3.31	3.33	0.105	10.763	0.986	0.037	22.61	18.33	22.24
	2	0.048	21.00	636.7	0.036	0.002	3.28	3.30	-0.000	-0.000	3.28	3.30	0.056	5.379	0.978	0.035	21.65	18.08	22.71
	3	0.046	3.00	645.3	0.028	-0.001	3.38	3.41	0.000	0.000	3.38	3.42	-0.036	-3.838	0.987	0.028	4.87	17.24	22.32
	4	0.041	0.00	652.8	0.035	0.001	3.47	3.49	-0.000	-0.000	3.47	3.49	0.029	2.450	0.977	0.034	2.45	19.29	21.14
	5	0.045	-3.00	660	0.035	-0.004	3.34	3.36	0.000	0.000	3.34	3.36	-0.114	-9.545	1.004	0.035	10.00	19.34	22.22
	6	0.049	-3.00	666	0.056	-0.006	3.28	3.28	0.000	0.000	3.28	3.28	-0.107	-9.111	1.002	0.056	9.59	24.54	23.26
	7	0.047	10.00	673.3	0.063	-0.001	3.28	3.27	0.000	0.000	3.28	3.27	-0.016	-2.039	0.983	0.062	10.20	25.81	22.85
	8	0.048	20.00	678.6	0.081	-0.001	3.33	3.30	0.000	0.000	3.33	3.29	-0.012	-1.704	0.982	0.080	20.07	27.98	23.14
	9	0.046	20.00	683.4	0.101	-0.003	3.31	3.26	0.000	0.000	3.31	3.25	-0.030	-3.308	0.985	0.100	20.26	31.33	22.71
	10	0.048	20.00	678.9	0.116	0.013	3.49	3.43	0.000	0.000	3.49	3.42	0.112	11.465	0.987	0.114	22.94	32.92	23.14
4	1	0.046	2.00	627.3	0.073	-0.002	3.36	3.34	0.000	0.000	3.36	3.34	0.027	3.101	0.985	0.072	3.69	27.62	22.14
	2	0.046	-3.00	638.3	0.054	-0.003	3.52	3.52	0.000	0.000	3.52	3.52	-0.056	-5.489	0.991	0.054	6.25	23.86	22.25
	3	0.047	-6.00	645.7	0.046	-0.003	3.33	3.34	0.000	0.000	3.33	3.34	-0.065	-6.239	0.994	0.046	8.65	22.00	22.57
	4	0.045	-2.00	653.2	0.054	0.000	3.30	3.30	0.000	0.000	3.30	3.30	0.000	-0.501	0.980	0.053	2.06	24.01	22.16
	5	0.043	-2.00	662.7	0.054	0.001	3.30	3.30	-0.000	-0.000	3.30	3.30	0.019	1.389	0.978	0.053	2.43	24.08	21.75
	6	0.047	-1.00	670.8	0.069	0.006	3.22	3.21	-0.000	-0.000	3.22	3.21	0.087	8.817	0.982	0.068	8.87	27.08	22.83
	7	0.043	1.00	675.6	0.076	0.003	3.27	3.25	-0.000	-0.000	3.27	3.25	0.039	3.622	0.977	0.074	3.76	28.68	21.88
	8	0.044	2.00	679.8	0.090	0.004	3.33	3.29	-0.000	-0.000	3.33	3.28	0.044	4.162	0.977	0.088	4.62	31.24	22.17
	9	0.047	5.00	683.9	0.109	0.003	3.37	3.32	-0.000	-0.000	3.37	3.31	0.028	2.338	0.977	0.106	5.52	34.39	22.96
	10	0.047	5.00	683.9	0.103	0.000	3.25	3.20	0.000	0.000	3.25	3.19	0.000	-0.501	0.980	0.101	5.02	33.51	22.96
5	1	0.042	-5.00	628.8	0.102	-0.005	3.43	3.38	0.000	0.000	3.43	3.37	-0.049	-4.962	0.990	0.101	7.04	32.57	21.17
	2	0.046	-2.00	642.8	0.085	0.000	3.52	3.49	0.000	0.000	3.52	3.48	0.000	-0.501	0.980	0.083	2.06	29.97	22.29
	3	0.046	-2.00	652	0.082	0.001	3.48	3.45	-0.000	-0.000	3.48	3.44	0.012	0.733	0.978	0.080	2.13	29.54	22.39
	4	0.042	-7.00	661.6	0.100	0.003	3.41	3.36	-0.000	-0.000	3.41	3.35	0.030	2.602	0.977	0.098	7.47	32.49	21.49
	5	0.042	0.00	668.8	0.123	0.008	3.37	3.30	-0.000	-0.000	3.37	3.29	0.065	6.422	0.978	0.120	6.42	36.26	21.56
	6	0.047	-6.00	673.8	0.107	0.011	3.34	3.29	0.000	0.000	3.34	3.28	0.103	10.506	0.985	0.105	12.08	33.47	22.85
	7	0.045	-3.00	678	0.116	0.009	3.28	3.21	-0.000	-0.000	3.28	3.20	0.078	7.798	0.980	0.114	8.35	35.24	22.41
	8	0.048	2.00	681.9	0.108	0.010	3.41	3.36	-0.000	-0.000	3.41	3.35	0.093	9.424	0.983	0.106	9.63	33.98	23.18
	9	0.047	2.00	685.2	0.118	0.009	3.38	3.31	-0.000	-0.000	3.38	3.30	0.076	7.654	0.980	0.116	7.91	35.69	22.97
	10	0.046	5.00	683.5	0.024	0.000	3.36	3.39	0.000	0.000	3.36	3.40	0.000	-0.501	0.980	0.024	5.02	16.17	22.70
6	1	0.046	-2.00	594.6	0.119	0.001	3.48	3.42	-0.000	-0.000	3.48	3.41	0.008	0.345	0.979	0.116	2.03	34.67	21.80
	2	0.046	5.00	624.5	0.117	0.001	3.25	3.18	-0.000	-0.000	3.25	3.17	0.009	0.360	0.979	0.114	5.01	34.76	22.12
	3	0.045	5.00	643.7	0.133	0.003	3.29	3.21	-0.000	-0.000	3.29	3.20	0.023	1.812	0.977	0.130	5.32	37.34	22.07
	4	0.043	0.00	657.9	0.151	0.008	3.40	3.30	-0.000	-0.000	3.40	3.28	0.053	5.096	0.977	0.148	5.10	40.05	21.71
	5	0.049	0.00	667.5	0.152	0.011	3.51	3.40	-0.000	-0.000	3.51	3.38	0.072	7.227	0.979	0.149	7.23	40.23	23.27
	6	0.045	2.00	676.5	0.140	0.017	3.62	3.52	0.000	0.000	3.62	3.50	0.121	12.404	0.989	0.138	12.56	38.32	22.38
	7	0.045	2.00	682.8	0.136	0.017	3.40	3.32	0.000	0.000	3.40	3.31	0.125	12.754	0.990	0.135	12.91	37.85	22.45
	8	0.046	2.00	688	0.116	0.018	3.36	3.30	0.000	0.000	3.36	3.29	0.155	15.466	0.997	0.116	15.59	34.75	22.75
	9	0.046	0.00	690.5	0.084	0.011	3.44	3.40	0.000	0.000	3.44	3.39	0.131	13.324	0.991	0.083	13.32	29.81	22.77
	10	0.046	8.00	688.8	0.063	0.000	3.53	3.52	0.000	0.000	3.53	3.52	0.000	-0.501	0.980	0.062	8.02	26.10	22.50

Avg. Duct Static = 3.32

Yaw Avg. = 1.78 | Average Temp.

Pitch Avg. =-1.93 | Resul Angle Avg. = 11.92 | Traverse Avg. Velocity in ft/s | Probes

Std. Dev. =7.62	660	Std. Dev. =12.36	Std. Dev. =8.53	27.51	22.55

IP7_040225

IP7_040226

3D PROBE WORK SHEET

PROJECT:---
Test Run:------
INPUTS

STD. TEMP. DEGREES F (t std)		68				
STD. BAROMETRIC PRESSURE " Hg (Pstd)		29.92				
DUCT SIZE (D)	Traverse	75.000	120.000	75.000	120.000	Flow Element
AVERAGE TEMPERATURE DEGREES F (ts)		685				
AVERAGE PRESSURE IN. W.C. (Pg)		2.65				
ACTUAL BAROMETRIC PRESSURE " Hg (Pbar)		25.50				
% O2 (20.95)		20.95				
% N2 (78.09)		78.09				
% CO2 (0.03)		0.03				
% CO (0.0)		0.00				
%A (0.93)		0.93				
% H2O (0.0)		0.00				

CALCULATIONS

	Traverse	Flow Elem.	% Difference
DRY MOLE FRACTION OF STACK (Mfd) =	1.000	1.000	
STACK PRESSURE " Hg (Ps) =	25.69	25.69	
DRY MOLECULAR WT. OF STACK GAS Lb / Lb -Mole(Md)=	28.966	28.966	
WET MOLECULAR WT. OF STACK GAS Lb / Lb -Mole (Ms)=	28.966	28.966	
STACK AREA SQ. FT (As) =	62.500	62.500	
STACK VELOCITY FT/ SEC. (Vs) =	37.86	34.92	
ACTUAL STACK VOLUME (Q acfm) =	141,977	130,965	-7.76
DRY STANDARD VOLUMETRIC STACK FLOW (Q scfmd) =	56,212	51,851	-7.76
WET STANDARD VOLUMETRIC STACK FLOW (Q scfmw) =	56,212	51,851	-7.76
FLOW IN LBS/HR (wet) =	253399	233740	-7.76
FLOW IN LBS/HR (dry) =	253399	233740	-7.76

GAS DENSITY AT ACTUAL CONDITIONS, LBS/CU.FT.(wet)	0.029746
GAS DENSITY AT STANDARD CONDITIONS, LBS/CU.FT. (wet)	0.075132
GAS DENSITY AT STANDARD CONDITIONS, LBS/CU.FT. (dry)	0.075132

<date>

IP7_040227

Port #	Depth#	Probes Vp In. W.C.	Measured Yaw Angle Degrees	Air Temp. °F	P1 - P23 In.W.C.	Pitch Press. P4 - P5 In.W.C.	P1-Patm (Pt) In. W.C.	P23-Patm Ps Choke In w.c.	From Chart P1-Pt/Pt-Ps TP Coeff.	TP Coeff. * Corrected Pv P1-Pt	(P1-Patm) Minus P1-Pt	P23 Corrected In w.c.	Calculated P4-P5/P1-P23 F1	From Chart Pitch Angle Degrees	From Chart Pt-Ps/P1-P23 (F2)^2	Corrected Pv Pt-Ps In.W.C.	Resultant Angle Degrees	Traverse Point Velocity	Probes Point Velocity
1	1	0.100	-2.00	651.1	0.057	0.003	2.60	2.59	-0.000	-0.000	2.60	2.59	0.053	5.058	0.977	0.056	5.44	24.54	33.03
	2	0.108	-3.00	663.4	0.057	0.000	2.71	2.71	0.000	0.000	2.71	2.71	0.000	-0.501	0.980	0.056	3.04	24.78	34.51
	3	0.105	-2.00	669.5	0.050	0.000	2.49	2.49	0.000	0.000	2.49	2.49	0.000	-0.501	0.980	0.049	2.06	23.30	34.13
	4	0.104	-7.00	676.2	0.060	0.016	2.58	2.57	-0.000	-0.000	2.58	2.57	0.267	20.029	1.016	0.061	21.17	24.32	34.07
	5	0.110	-4.00	681.3	0.050	-0.021	2.42	2.42	0.002	0.000	2.42	2.42	-0.420	-31.017	1.137	0.057	31.25	21.59	35.12
	6	0.105	0.00	686.9	0.094	-0.049	2.53	2.48	0.002	0.000	2.53	2.47	-0.521	-31.183	1.141	0.107	31.18	29.74	34.40
	7	0.104	4.00	690.9	0.138	-0.069	2.62	2.54	0.005	0.001	2.62	2.53	-0.500	-32.584	1.169	0.161	32.80	35.90	34.29
	8	0.108	9.00	694.9	0.168	-0.070	2.82	2.70	0.001	0.000	2.82	2.68	-0.417	-30.788	1.133	0.190	31.95	39.42	35.00
	9	0.101	15.00	698	0.167	-0.034	2.55	2.43	-0.002	-0.000	2.55	2.41	-0.204	-14.381	1.016	0.170	20.67	41.11	33.90
	10	0.107	10.00	698.4	0.069	0.000	2.38	2.36	0.000	0.000	2.38	2.36	0.000	-0.501	0.980	0.068	10.01	27.32	34.90
2	1	0.106	4.00	638.4	0.102	0.017	2.44	2.39	0.000	0.000	2.44	2.38	0.167	16.365	1.000	0.102	16.83	31.76	33.83
	2	0.106	-3.00	656.9	0.064	0.018	2.53	2.50	0.000	0.000	2.53	2.49	0.214	19.086	1.011	0.085	19.31	28.81	34.10
	3	0.107	-7.00	667.1	0.067	0.009	2.39	2.37	0.000	0.000	2.39	2.37	0.134	13.641	0.992	0.066	15.30	26.17	34.43
	4	0.101	-5.00	674.3	0.059	-0.008	2.35	2.35	-0.000	-0.000	2.35	2.35	-0.136	-10.770	1.007	0.059	-11.86	25.19	33.55
	5	0.104	0.00	680.2	0.051	-0.005	2.45	2.45	0.000	0.000	2.45	2.45	-0.098	-8.536	1.001	0.051	8.54	23.65	34.13
	6	0.105	0.00	685.8	0.071	-0.013	2.70	2.68	-0.001	-0.000	2.70	2.68	-0.183	-13.288	1.013	0.072	13.29	27.69	34.37
	7	0.099	-5.00	690.5	0.114	-0.022	2.46	2.40	-0.001	-0.000	2.46	2.39	-0.193	-13.810	1.015	0.116	14.67	34.98	33.46
	8	0.109	6.00	695.5	0.150	-0.029	2.52	2.42	-0.001	-0.000	2.52	2.40	-0.193	-13.829	1.015	0.152	15.05	40.14	35.18
	9	0.107	4.00	699.2	0.186	-0.028	2.56	2.42	-0.000	-0.000	2.56	2.40	-0.151	-11.580	1.009	0.188	12.24	45.19	34.91
	10	0.102	15.00	700.7	0.144	-0.050	2.46	2.35	-0.005	-0.001	2.45	2.33	0.347	24.896	1.051	0.151	28.82	36.41	34.11
3	1	0.108	10.00	644.6	0.128	0.032	2.68	2.60	0.000	0.000	2.68	2.59	0.250	19.957	1.016	0.130	22.23	34.76	34.23
	2	0.109	10.00	659.4	0.113	-0.050	2.64	2.58	0.004	0.001	2.64	2.57	-0.442	-32.303	1.164	0.131	33.65	31.65	34.62
	3	0.107	5.00	668.1	0.079	-0.050	2.65	2.62	0.000	0.000	2.65	2.61	-0.633	-9.104	1.002	0.079	10.38	29.13	34.43
	4	0.106	0.00	676.1	0.062	0.013	2.73	2.72	0.000	0.000	2.73	2.72	0.210	18.899	1.010	0.063	18.90	25.01	34.38
	5	0.106	3.00	683	0.058	0.000	2.82	2.82	0.000	0.000	2.82	2.82	0.000	-0.501	0.980	0.057	3.04	25.21	34.48
	6	0.106	7.00	692.3	0.085	-0.031	2.61	2.57	-0.005	-0.000	2.61	2.56	-0.365	-26.482	1.067	0.091	27.33	28.46	34.64
	7	0.106	5.00	697.4	0.118	-0.012	2.44	2.37	0.000	0.000	2.44	2.36	-0.102	-8.770	1.001	0.118	10.09	36.09	34.72
	8	0.107	5.00	699.9	0.139	-0.019	2.61	2.52	-0.000	-0.000	2.61	2.50	-0.137	-10.830	1.007	0.140	11.92	39.08	34.92
	9	0.104	15.00	702.4	0.181	-0.053	2.89	2.76	-0.005	-0.001	2.89	2.74	-0.293	-20.221	1.028	0.186	24.99	41.76	34.45
	10	0.109	18.00	698.7	0.204	-0.035	2.82	2.67	-0.001	-0.000	2.82	2.64	-0.172	-12.686	1.012	0.206	21.90	44.97	35.22
4	1	0.106	2.00	638.8	0.168	0.066	2.68	2.56	0.000	0.000	2.68	2.54	0.387	18.076	1.006	0.169	18.18	40.59	33.82
	2	0.104	0.00	652.8	0.125	0.060	2.48	2.41	-0.001	-0.000	2.48	2.40	0.480	26.696	1.090	0.136	26.70	34.48	33.72
	3	0.109	-10.00	663.6	0.086	0.000	2.32	2.28	0.000	0.000	2.32	2.27	0.000	-0.501	0.980	0.084	10.01	30.04	34.70
	4	0.107	18.00	672.9	0.077	-0.016	2.42	2.40	-0.002	-0.000	2.42	2.40	-0.208	-14.612	1.016	0.078	16.62	28.28	34.51
	5	0.108	-5.00	681.4	0.116	-0.022	2.60	2.53	-0.001	-0.000	2.60	2.52	-0.190	-13.634	1.014	0.118	14.51	35.16	34.80
	6	0.107	-3.00	697.4	0.140	0.020	2.63	2.53	0.000	0.000	2.63	2.51	0.143	14.416	0.994	0.139	14.72	38.47	34.88
	7	0.115	0.00	701.6	0.156	-0.037	2.81	2.71	-0.003	-0.000	2.81	2.69	-0.237	-16.321	1.019	0.159	16.32	40.87	36.22
	8	0.112	-3.00	703.5	0.171	-0.060	2.97	2.85	-0.005	-0.001	2.97	2.83	-0.351	-25.228	1.054	0.180	25.39	40.99	35.76
	9	0.107	14.00	705.3	0.199	-0.050	3.14	2.99	-0.003	-0.001	3.14	2.96	-0.251	-17.216	1.021	0.203	22.06	44.67	34.98
	10	0.107	14.00	705.8	0.163	0.019	2.92	2.80	0.000	0.000	2.92	2.76	0.117	11.920	0.988	0.161	18.31	40.76	34.99
5	1	0.107	5.00	660	0.238	0.033	3.25	3.07	0.000	0.000	3.25	3.04	0.139	14.039	0.993	0.236	14.89	49.25	34.29
	2	0.111	-5.00	675.4	0.198	0.080	3.23	3.09	0.000	0.000	3.23	3.07	0.404	18.359	1.008	0.200	19.00	44.57	35.16
	3	0.107	-5.00	682.3	0.195	0.085	3.02	2.87	-0.000	-0.000	3.02	2.84	0.436	20.176	1.017	0.198	20.76	44.09	34.63
	4	0.112	-10.00	688.9	0.219	0.032	3.04	2.87	0.000	0.000	3.04	2.84	0.146	14.703	0.995	0.218	17.72	47.22	35.54
	5	0.119	-10.00	693.6	0.215	0.051	2.94	2.77	0.000	0.000	2.94	2.74	0.237	19.762	1.015	0.218	22.06	46.07	36.71
	6	0.113	-12.00	697.6	0.213	0.003	3.01	2.85	-0.000	-0.000	3.01	2.82	0.014	0.928	0.978	0.208	12.04	47.58	35.83
	7	0.114	-13.00	700.3	0.213	-0.007	3.06	2.89	0.000	0.000	3.06	2.86	-0.033	-3.588	0.986	0.210	13.48	47.56	36.03
	8	0.109	-3.00	702.6	0.217	-0.025	3.17	3.00	0.000	0.000	3.17	2.97	-0.115	-9.600	1.004	0.218	10.05	49.08	35.26
	9	0.119	3.00	704.3	0.222	0.014	3.05	2.88	-0.000	-0.000	3.05	2.85	0.063	6.204	0.978	0.217	6.89	49.45	36.87
	10	0.118	-7.00	705.2	0.088	0.000	2.73	2.69	0.000	0.000	2.73	2.68	0.000	-0.501	0.980	0.086	7.02	31.17	36.74
6	1	0.121	-10.00	668.7	0.261	0.042	3.10	2.89	0.000	0.000	3.10	2.85	0.161	15.926	0.999	0.261	18.74	50.88	36.61
	2	0.112	-10.00	681	0.253	0.085	3.02	2.81	0.000	0.000	3.02	2.77	0.336	18.791	1.010	0.255	21.20	49.87	35.42
	3	0.107	-5.00	690	0.278	0.038	3.10	2.87	0.000	0.000	3.10	2.83	0.137	13.859	0.993	0.276	14.72	53.98	34.75
	4	0.111	0.00	696.3	0.275	0.024	3.15	2.92	-0.000	-0.000	3.15	2.88	0.087	8.851	0.982	0.270	8.85	54.69	35.49
	5	0.115	-5.00	701	0.284	0.049	3.23	2.99	0.000	0.000	3.23	2.95	0.173	16.790	1.001	0.284	17.50	54.28	36.19
	6	0.117	0.00	703.8	0.291	0.020	3.04	2.80	-0.000	-0.000	3.04	2.76	0.069	6.827	0.979	0.285	6.83	56.64	36.56
	7	0.113	4.00	705.6	0.259	-0.001	3.03	2.82	0.000	0.000	3.03	2.78	0.004	-0.882	0.980	0.264	4.10	53.76	35.96
	8	0.112	-3.00	706.9	0.225	-0.026	3.04	2.86	0.000	0.000	3.04	2.83	-0.116	-9.621	1.004	0.226	10.07	50.08	35.81
	9	0.116	-2.00	707.3	0.154	-0.017	3.03	2.93	0.000	0.000	3.03	2.91	-0.110	-9.310	1.003	0.154	9.52	41.48	36.45
	10	0.109	0.00	701.5	0.078	-0.029	3.16	3.14	-0.004	-0.000	3.16	3.14	-0.372	-27.119	1.074	0.084	27.12	27.49	35.23

Avg. Duct Static = 2.65

Yaw Avg. =0.57	Average Temp.	Pitch Avg. =-2.46	Result Angle Avg. =16.59	Traverse	Probes
				Avg. Velocity in ft/s	

Std. Dev. =7.48	685	Std. Dev. =16.82	Std. Dev. =7.99	37.86	34.92

IP7_040228

IP7_040229

3D PROBE WORK SHEET

PROJECT:---
Test Run:------
INPUTS

STD. TEMP. DEGREES F (t std)		68				
STD. BAROMETRIC PRESSURE " Hg (Pstd)		29.92				
DUCT SIZE (D)	Traverse	75.000	120.000	75.000	120.000	Flow Element
AVERAGE TEMPERATURE DEGREES F (ts)		686				
AVERAGE PRESSURE IN. W.C. (Pg)		2.15				
ACTUAL BAROMETRIC PRESSURE " Hg (Pbar)		25.50				
% O2 (20.95)		20.95				
% N2 (78.09)		78.09				
% CO2 (0.03)		0.03				
% CO (0.0)		0.00				
%A (0.93)		0.93				
% H2O (0.0)		0.00				

CALCULATIONS

	Traverse	Flow Elem.	% Difference
DRY MOLE FRACTION OF STACK (Mfd) =	1.000	1.000	
STACK PRESSURE " Hg (Ps) =	25.66	25.66	
DRY MOLECULAR WT. OF STACK GAS Lb / Lb -Mole(Md)=	28.966	28.966	
WET MOLECULAR WT. OF STACK GAS Lb / Lb -Mole (Ms)=	28.966	28.966	
STACK AREA SQ. FT (As) =	62.500	62.500	
STACK VELOCITY FT/ SEC. (Vs) =	41.95	40.47	
ACTUAL STACK VOLUME (Q acfm) =	157,294	151,771	-3.51
DRY STANDARD VOLUMETRIC STACK FLOW (Q scfmd) =	62,163	59,980	-3.51
WET STANDARD VOLUMETRIC STACK FLOW (Q scfmw) =	62,163	59,980	-3.51
FLOW IN LBS/HR (wet) =	280225	270385	-3.51
FLOW IN LBS/HR (dry) =	280225	270385	-3.51

GAS DENSITY AT ACTUAL CONDITIONS, LBS/CU.FT.(wet)	0.029692
GAS DENSITY AT STANDARD CONDITIONS, LBS/CU.FT. (wet)	0.075132
GAS DENSITY AT STANDARD CONDITIONS, LBS/CU.FT. (dry)	0.075132

<date>

IP7_040230

Port #	Depth#	Probes Vp In. W.C.	Measured Yaw Angle Degrees	Air Temp. °F	P1 - P23 In.W.C.	Pitch Press. P4 - P5 In.W.C.	P1-Patm (Pt) In. W.C.	P23-Patm Ps Choke In w.c.	From Chart P1-Pt/Pt-Ps TP Coeff.	TP Coeff. * Corrected Pv P1-Pt	(P1-Patm) Minus P1-Pt	P23 Corrected In w.c.	Calculated P4-P5/P1-P23 F1	From Chart Pitch Angle Degrees	From Chart Pt-Ps/P1-P23 (F2)^2	Corrected Pv Pt-Ps In.W.C.	Resultant Angle Degrees	Traverse Point Velocity	Probes Point Velocity
1	1	0.138	2.00	623.7	0.074	0.000	2.17	2.14	0.000	0.000	2.17	2.13	0.000	-0.501	0.980	0.072	2.06	27.78	38.35
	2	0.146	0.00	637.5	0.081	0.000	2.15	2.11	0.000	0.000	2.15	2.10	0.000	-0.501	0.980	0.079	0.50	29.27	39.70
	3	0.139	0.00	653.8	0.109	-0.011	2.43	2.37	0.000	0.000	2.43	2.36	-0.101	-8.720	1.001	0.109	8.72	34.16	39.01
	4	0.135	0.00	663.7	0.058	0.000	2.27	2.26	0.000	0.000	2.27	2.26	0.000	-0.501	0.980	0.057	0.50	25.05	38.62
	5	0.141	-5.00	672.8	0.076	-0.037	2.12	2.10	0.005	0.000	2.12	2.10	-0.487	-32.999	1.178	0.090	33.33	26.39	39.63
	6	0.148	-10.00	683.4	0.112	-0.063	2.04	1.98	-0.005	-0.001	2.04	1.97	-0.563	-25.677	1.058	0.119	27.43	32.41	40.80
	7	0.145	2.00	687.6	0.142	-0.050	2.23	2.14	-0.005	-0.001	2.23	2.12	-0.352	-25.340	1.055	0.150	25.41	37.14	40.45
	8	0.158	13.00	693.9	0.199	-0.137	2.40	2.25	-0.000	-0.000	2.40	2.22	-0.688	2.158	0.977	0.194	13.17	45.73	42.34
	9	0.143	15.00	698.9	0.223	-0.074	2.55	2.37	-0.006	-0.001	2.55	2.34	-0.332	-23.514	1.042	0.232	27.66	45.56	40.36
	10	0.150	0.00	698.6	0.057	0.000	2.20	2.20	0.000	0.000	2.20	2.20	0.000	-0.501	0.980	0.056	0.50	25.22	41.34
2	1	0.144	17.00	654.2	0.181	0.039	2.49	2.36	0.000	0.000	2.49	2.34	0.215	19.131	1.011	0.183	25.38	40.45	39.71
	2	0.144	0.00	666.4	0.131	0.050	2.32	2.25	0.000	0.000	2.32	2.24	0.382	18.062	1.006	0.132	18.06	36.39	39.93
	3	0.151	-5.00	677.5	0.086	0.000	2.16	2.13	0.000	0.000	2.16	2.12	0.000	-0.501	0.980	0.084	5.02	30.58	41.10
	4	0.137	0.00	682.8	0.052	0.000	2.10	2.10	0.000	0.000	2.10	2.10	0.000	-0.501	0.980	0.051	0.50	23.93	39.24
	5	0.143	-5.00	688.1	0.056	0.022	2.01	2.00	0.000	0.000	2.01	2.00	0.393	18.130	1.007	0.056	18.78	23.89	40.19
	6	0.141	-5.00	692.6	0.083	-0.008	2.08	2.05	0.000	0.000	2.08	2.04	-0.096	-8.429	1.000	0.083	9.79	30.23	39.98
	7	0.141	0.00	697	0.125	0.050	2.25	2.17	0.000	0.000	2.25	2.16	0.400	18.256	1.007	0.126	18.26	35.94	40.05
	8	0.138	1.00	699.7	0.182	-0.106	2.37	2.23	-0.006	-0.001	2.37	2.21	-0.582	-21.713	1.033	0.188	21.73	43.00	39.67
	9	0.144	10.00	702.4	0.223	-0.053	2.28	2.10	-0.003	-0.001	2.28	2.07	-0.238	-16.351	1.019	0.227	19.09	48.18	40.58
	10	0.144	10.00	702.3	0.121	0.061	2.11	2.04	0.001	0.000	2.11	2.03	0.504	32.810	1.246	0.151	34.14	34.37	40.58
3	1	0.140	15.00	645.6	0.200	0.107	2.23	2.08	-0.033	-0.008	2.24	2.05	0.535	43.645	1.228	0.246	45.65	36.13	39.02
	2	0.146	0.00	660.3	0.127	0.050	2.04	1.96	0.000	0.000	2.04	1.95	0.394	18.142	1.007	0.128	18.14	35.67	40.12
	3	0.151	-7.00	672.8	0.072	0.000	1.97	1.95	0.000	0.000	1.97	1.95	0.000	-0.501	0.980	0.071	7.02	27.83	41.02
	4	0.143	0.00	679.7	0.068	0.000	2.12	2.10	0.000	0.000	2.12	2.10	0.000	-0.501	0.980	0.067	0.50	27.33	40.04
	5	0.139	-10.00	686.4	0.074	0.022	2.06	2.04	0.000	0.000	2.06	2.04	0.297	19.701	1.014	0.075	22.00	26.97	39.59
	6	0.150	-12.00	691.8	0.106	-0.030	2.26	2.20	-0.005	-0.001	2.26	2.19	-0.283	-19.463	1.026	0.109	22.74	32.36	41.22
	7	0.143	-7.00	696.3	0.149	-0.016	2.13	2.03	0.000	0.000	2.13	2.01	-0.107	-9.126	1.002	0.149	11.48	40.39	40.33
	8	0.137	2.00	700.5	0.184	-0.112	2.11	1.98	-0.002	-0.000	2.11	1.96	-0.609	-15.440	1.018	0.187	15.57	44.55	39.55
	9	0.145	5.00	702.4	0.237	-0.137	2.21	2.02	-0.006	-0.001	2.21	1.99	-0.578	-22.646	1.037	0.246	23.16	48.74	40.72
	10	0.136	20.00	704.3	0.225	0.016	2.17	1.99	-0.000	-0.000	2.17	1.96	0.071	7.089	0.979	0.220	21.17	46.85	39.47
4	1	0.139	3.00	662.7	0.227	0.055	2.24	2.06	0.000	0.000	2.24	2.03	0.242	19.855	1.015	0.230	20.07	47.38	39.18
	2	0.142	-5.00	676.2	0.152	0.050	2.19	2.08	0.000	0.000	2.19	2.06	0.329	18.969	1.010	0.154	19.59	39.03	39.84
	3	0.141	-4.00	682.5	0.107	0.050	2.07	2.02	-0.001	-0.000	2.07	2.01	0.467	24.245	1.053	0.113	24.55	32.37	39.81
	4	0.145	-8.00	688.6	0.122	0.027	2.20	2.13	0.000	0.000	2.20	2.12	0.221	19.338	1.012	0.124	20.87	34.90	40.47
	5	0.147	-2.00	693.1	0.145	0.003	2.34	2.25	-0.000	-0.000	2.34	2.23	0.021	1.616	0.977	0.142	2.57	40.04	40.82
	6	0.148	-7.00	696.9	0.166	0.088	2.12	2.01	-0.014	-0.003	2.12	1.99	0.530	41.701	1.370	0.227	42.18	37.70	41.04
	7	0.146	-5.00	699.2	0.188	-0.016	2.13	1.99	0.000	0.000	2.13	1.97	-0.085	-7.675	0.998	0.188	9.15	45.67	40.81
	8	0.153	-6.00	701.5	0.225	-0.095	2.21	2.03	0.002	0.001	2.21	2.00	-0.422	-31.165	1.140	0.257	31.68	46.08	41.81
	9	0.142	4.00	703.7	0.259	-0.125	2.42	2.20	0.006	0.002	2.42	2.16	-0.483	-33.065	1.180	0.306	33.28	49.43	40.31
	10	0.145	13.00	704.7	0.252	0.005	2.50	2.29	-0.000	-0.000	2.50	2.25	0.020	1.527	0.977	0.246	13.09	51.73	40.75
5	1	0.147	2.00	657.4	0.288	0.128	2.48	2.23	-0.000	-0.000	2.48	2.19	0.444	21.029	1.023	0.295	21.12	53.06	40.19
	2	0.153	-5.00	669.6	0.245	0.050	2.56	2.36	0.000	0.000	2.56	2.33	0.204	18.649	1.009	0.247	19.28	49.45	41.21
	3	0.150	-13.00	680.6	0.235	0.050	2.48	2.29	0.000	0.000	2.48	2.26	0.213	19.026	1.011	0.238	22.91	47.54	41.01
	4	0.148	-13.00	687.8	0.249	0.050	2.28	2.08	0.000	0.000	2.28	2.05	0.201	18.491	1.008	0.251	22.47	49.20	40.88
	5	0.141	-10.00	693.3	0.256	0.006	2.46	2.25	-0.000	-0.000	2.46	2.21	0.023	1.905	0.977	0.250	10.18	52.42	39.99
	6	0.153	-10.00	696.9	0.262	0.058	2.25	2.04	0.000	0.000	2.25	2.00	0.221	19.340	1.012	0.265	21.68	51.06	41.73
	7	0.154	-7.00	700.3	0.272	-0.010	2.35	2.13	0.000	0.000	2.35	2.09	-0.037	-3.929	0.987	0.268	8.02	54.81	41.92
	8	0.146	-4.00	702	0.267	-0.024	2.35	2.13	0.000	0.000	2.35	2.09	-0.090	-8.000	0.999	0.267	8.94	54.54	40.85
	9	0.148	5.00	703.5	0.278	-0.048	2.32	2.09	-0.001	-0.000	2.32	2.05	-0.173	-12.743	1.012	0.281	13.67	55.14	41.16
	10	0.148	0.00	703.9	0.035	0.000	2.00	2.02	0.000	0.000	2.00	2.02	0.000	-0.501	0.980	0.034	0.50	19.81	41.16
6	1	0.152	0.00	648.8	0.334	-0.050	2.74	2.46	-0.000	-0.000	2.74	2.41	-0.150	-11.536	1.009	0.337	11.54	59.38	40.70
	2	0.143	-3.00	671.1	0.326	0.053	2.77	2.49	0.000	0.000	2.77	2.44	0.163	16.055	0.999	0.326	16.33	57.74	39.87
	3	0.148	-10.00	685.2	0.319	0.096	2.67	2.40	0.000	0.000	2.67	2.35	0.301	19.630	1.014	0.323	21.94	55.96	40.81
	4	0.149	0.00	693	0.356	0.038	2.73	2.42	0.000	0.000	2.73	2.37	0.107	10.917	0.986	0.351	10.92	61.92	41.09
	5	0.150	5.00	699.7	0.342	0.047	2.59	2.29	0.000	0.000	2.59	2.24	0.137	13.927	0.993	0.340	14.78	60.16	41.35
	6	0.147	10.00	702.1	0.345	-0.043	2.65	2.35	0.000	-0.000	2.65	2.30	0.125	10.152	1.005	0.347	14.21	61.02	40.98
	7	0.145	5.00	704.1	0.321	-0.106	2.83	2.56	-0.006	-0.002	2.83	2.51	0.330	23.370	1.041	0.334	23.87	56.52	40.72
	8	0.157	7.00	706	0.280	0.002	2.65	2.41	-0.000	-0.000	2.65	2.37	0.007	0.217	0.978	0.274	7.00	55.62	42.41
	9	0.146	5.00	706.7	0.212	-0.033	2.48	2.31	-0.001	-0.000	2.48	2.28	-0.156	-11.852	1.010	0.214	12.85	48.31	40.92
	10	0.153	0.00	705.2	0.192	-0.133	2.56	2.41	-0.000	-0.000	2.56	2.38	-0.693	2.461	0.977	0.188	2.46	46.30	41.86

Avg. Duct Static = 2.15

Yaw Avg. =-0.12 | Average Temp. | Pitch Avg. = 1.64 | Resul Angle Avg. = 16.65 | Traverse Avg. Velocity in ft/s | Probes

<date>

Std. Dev. = 7.69	686	Std. Dev. = 18.21	Std. Dev. = 10.44	41.95	40.47

IP7_040231

IP7_040232

3D PROBE WORK SHEET

PROJECT:---
Test Run:------
INPUTS

STD. TEMP. DEGREES F (t std)		68				
STD. BAROMETRIC PRESSURE " Hg (Pstd)		29.92				
DUCT SIZE (D)	Traverse	77.000	120.000	77.000	120.000	Flow Element
AVERAGE TEMPERATURE DEGREES F (ts)		659				
AVERAGE PRESSURE IN. W.C. (Pg)		3.62				
ACTUAL BAROMETRIC PRESSURE " Hg (Pbar)		25.50				
% O2 (20.95)		20.95				
% N2 (78.09)		78.09				
% CO2 (0.03)		0.03				
% CO (0.0)		0.00				
%A (0.93)		0.93				
% H2O (0.0)		0.00				

CALCULATIONS

	Traverse	Flow Elem.	% Difference
DRY MOLE FRACTION OF STACK (Mfd) =	1.000	1.000	
STACK PRESSURE " Hg (Ps) =	25.77	25.77	
DRY MOLECULAR WT. OF STACK GAS Lb / Lb -Mole(Md)=	28.966	28.966	
WET MOLECULAR WT. OF STACK GAS Lb / Lb -Mole (Ms)=	28.966	28.966	
STACK AREA SQ. FT (As) =	64.167	64.167	
STACK VELOCITY FT/ SEC. (Vs) =	24.41	20.14	
ACTUAL STACK VOLUME (Q acfm) =	93,997	77,534	-17.51
DRY STANDARD VOLUMETRIC STACK FLOW (Q scfmd) =	38,201	31,510	-17.52
WET STANDARD VOLUMETRIC STACK FLOW (Q scfmw) =	38,201	31,510	-17.52
FLOW IN LBS/HR (wet) =	172207	142044	-17.52
FLOW IN LBS/HR (dry) =	172207	142044	-17.52

GAS DENSITY AT ACTUAL CONDITIONS, LBS/CU.FT.(wet)	0.030534
GAS DENSITY AT STANDARD CONDITIONS, LBS/CU.FT. (wet)	0.075132
GAS DENSITY AT STANDARD CONDITIONS, LBS/CU.FT. (dry)	0.075132

<date>

IP7_040233

Port #	Depth#	Probes Vp In. W.C.	Measured Yaw Angle Degrees	Air Temp. °F	P1 - P23 In.W.C.	Pitch Press. P4 - P5 In.W.C.	P1-Patm (Pt) In. W.C.	P23-Patm Ps Choke In w.c.	From Chart P1-Pt/Pt-Ps TP Coeff.	TP Coeff. * Corrected Pv P1-Pt	(P1-Patm) Minus P1-Pt	P23 Corrected In w.c.	Calculated P4-P5/P1-P23 F1	From Chart Pitch Angle Degrees	From Chart Pt-Ps/P1-P23 (F2)^2	Corrected Pv Pt-Ps In.W.C.	Resultant Angle Degrees	Traverse Point Velocity	Probes Point Velocity
1	1	0.039	0.00	630.2	0.044	0.000	3.73	3.73	0.000	0.000	3.73	3.73	0.000	-0.501	0.980	0.043	0.50	21.45	20.40
	2	0.039	5.00	637.8	0.051	-0.023	3.79	3.80	0.005	0.000	3.79	3.80	-0.451	-32.650	1.171	0.060	32.99	21.25	20.47
	3	0.039	5.00	645.8	0.046	-0.034	3.73	3.74	0.000	0.000	3.73	3.74	-0.739	-6.256	0.994	0.046	8.00	22.03	20.55
	4	0.037	-3.00	652.5	0.049	0.000	3.77	3.78	0.000	0.000	3.77	3.78	0.000	-0.501	0.980	0.048	3.04	22.83	20.07
	5	0.036	3.00	661.8	0.061	0.000	3.96	3.96	0.000	0.000	3.96	3.96	0.000	-0.501	0.980	0.060	3.04	25.57	19.88
	6	0.038	0.00	668.5	0.046	0.000	3.87	3.87	0.000	0.000	3.87	3.87	0.000	-0.501	0.980	0.045	0.50	22.31	20.48
	7	0.039	0.00	676.5	0.060	0.000	3.69	3.68	0.000	0.000	3.69	3.68	0.000	-0.501	0.980	0.059	0.50	25.57	20.83
	8	0.038	3.00	681.7	0.059	0.000	3.70	3.70	0.000	0.000	3.70	3.70	0.000	-0.501	0.980	0.058	3.04	25.38	20.61
	9	0.039	3.00	683	0.022	0.000	3.58	3.61	0.000	0.000	3.58	3.62	0.000	-0.501	0.980	0.022	3.04	15.51	20.89
	10	0.035	3.00	629.7	0.032	0.000	3.54	3.57	0.000	0.000	3.54	3.58	0.000	-0.501	0.980	0.031	3.04	18.27	19.33
2	1	0.032	-5.00	642.3	0.026	0.000	3.54	3.57	0.000	0.000	3.54	3.58	0.000	-0.501	0.980	0.024	5.02	16.20	18.59
	2	0.034	-5.00	648.3	0.025	0.000	3.58	3.61	0.000	0.000	3.58	3.62	0.000	-0.501	0.980	0.024	5.02	16.24	19.21
	3	0.039	-3.00	653.9	0.029	0.007	3.70	3.72	0.000	0.000	3.70	3.72	0.241	19.839	1.015	0.029	20.06	16.83	20.62
	4	0.032	-3.00	660.8	0.032	0.000	3.56	3.58	0.000	0.000	3.56	3.58	0.000	-0.501	0.980	0.031	3.04	18.52	18.74
	5	0.039	0.00	668.7	0.042	-0.003	3.54	3.55	0.000	0.000	3.54	3.55	-0.071	-6.703	0.995	0.042	6.70	21.35	20.76
	6	0.040	7.00	675	0.056	-0.006	3.46	3.46	0.000	0.000	3.46	3.46	-0.107	-9.111	1.002	0.056	11.47	24.48	21.09
	7	0.037	5.00	679.3	0.059	-0.042	3.51	3.50	-0.000	-0.000	3.51	3.50	-0.712	1.949	0.977	0.058	5.37	25.25	20.32
	8	0.032	5.00	683.4	0.065	0.000	3.59	3.57	0.000	0.000	3.59	3.57	0.000	-0.501	0.980	0.064	5.02	26.60	18.93
	9	0.035	0.00	685.3	0.039	-0.030	3.58	3.60	0.002	0.000	3.58	3.60	-0.769	-31.226	1.141	0.045	31.23	19.11	19.81
	10	0.040	0.00	617.6	0.045	0.000	3.62	3.63	0.000	0.000	3.62	3.63	0.000	-0.501	0.980	0.044	0.50	21.57	20.54
3	1	0.038	3.00	631.5	0.028	0.000	3.55	3.58	0.000	0.000	3.55	3.59	0.000	-0.501	0.980	0.027	3.04	17.10	20.15
	2	0.038	-10.00	639.3	0.030	0.000	3.49	3.52	0.000	0.000	3.49	3.53	0.000	-0.501	0.980	0.029	10.01	17.52	20.23
	3	0.037	0.00	648.3	0.040	0.000	3.58	3.59	0.000	0.000	3.58	3.59	0.000	-0.501	0.980	0.039	0.50	20.62	20.04
	4	0.038	0.00	657.9	0.045	-0.033	3.58	3.60	0.000	0.000	3.58	3.60	-0.733	-3.579	0.986	0.044	3.58	22.00	20.40
	5	0.038	5.00	663.8	0.048	0.000	3.76	3.77	0.000	0.000	3.76	3.77	0.000	-0.501	0.980	0.047	5.02	22.66	20.44
	6	0.040	0.00	669.6	0.052	-0.015	3.79	3.79	-0.005	-0.000	3.79	3.79	-0.288	-19.880	1.027	0.053	19.88	22.85	21.03
	7	0.035	0.00	674.9	0.070	-0.012	3.63	3.61	-0.001	-0.000	3.63	3.61	-0.171	-12.678	1.012	0.071	12.68	27.37	19.72
	8	0.039	0.00	679.8	0.078	0.000	3.67	3.65	0.000	0.000	3.67	3.65	0.000	-0.501	0.980	0.076	0.50	29.20	20.86
	9	0.039	-5.00	683.1	0.064	-0.039	3.63	3.62	-0.002	-0.000	3.63	3.62	-0.609	-15.266	1.017	0.065	16.05	25.95	20.89
	10	0.039	0.00	595.8	0.067	0.000	3.80	3.79	0.000	0.000	3.80	3.79	0.000	-0.501	0.980	0.066	0.50	26.04	20.08
4	1	0.039	-2.00	620.1	0.047	0.000	3.64	3.64	0.000	0.000	3.64	3.64	0.000	-0.501	0.980	0.046	2.06	22.05	20.31
	2	0.038	2.00	630.1	0.043	0.000	3.64	3.65	0.000	0.000	3.64	3.65	0.000	-0.501	0.980	0.042	2.06	21.19	20.14
	3	0.039	10.00	638.3	0.052	0.000	3.56	3.56	0.000	0.000	3.56	3.56	0.000	-0.501	0.980	0.051	10.01	23.05	20.48
	4	0.038	0.00	646.5	0.065	0.023	3.68	3.67	0.000	0.000	3.68	3.67	0.354	18.379	1.008	0.066	18.38	25.28	20.29
	5	0.037	0.00	666.9	0.070	0.000	3.63	3.61	0.000	0.000	3.63	3.61	0.000	-0.501	0.980	0.069	0.50	27.51	20.21
	6	0.037	8.00	672.8	0.079	0.000	3.61	3.59	0.000	0.000	3.61	3.59	0.000	-0.501	0.980	0.077	8.02	29.02	20.26
	7	0.037	0.00	677.4	0.079	-0.044	3.66	3.63	-0.004	-0.000	3.66	3.62	-0.557	-26.635	1.068	0.084	26.63	27.41	20.30
	8	0.038	3.00	682	0.088	-0.048	3.57	3.54	-0.002	-0.000	3.57	3.53	-0.545	-28.410	1.092	0.096	28.55	28.79	20.62
	9	0.034	7.00	684.9	0.040	-0.006	3.40	3.42	-0.000	-0.000	3.40	3.42	-0.150	-11.551	1.009	0.040	13.48	20.69	19.53
	10	0.040	0.00	619.7	0.110	0.045	3.63	3.57	0.000	0.000	3.63	3.56	0.409	18.523	1.008	0.111	18.52	32.47	20.57
5	1	0.036	0.00	635.2	0.081	0.000	3.44	3.42	0.000	0.000	3.44	3.42	0.000	-0.501	0.980	0.079	0.50	29.18	19.65
	2	0.033	0.00	647.7	0.097	0.000	3.52	3.47	0.000	0.000	3.52	3.46	0.000	-0.501	0.980	0.095	0.50	32.11	18.92
	3	0.034	7.00	659.3	0.108	0.008	3.59	3.54	-0.000	-0.000	3.59	3.53	0.074	7.414	0.980	0.106	10.18	33.52	19.31
	4	0.036	3.00	666	0.109	0.038	3.48	3.42	0.000	0.000	3.48	3.41	0.349	18.490	1.008	0.110	18.72	32.98	19.93
	5	0.037	5.00	672.3	0.104	0.023	3.51	3.46	0.000	0.000	3.51	3.45	0.221	19.333	1.012	0.105	19.94	32.13	20.26
	6	0.036	5.00	678.8	0.107	0.001	3.49	3.44	-0.000	-0.000	3.49	3.43	0.009	0.441	0.978	0.105	5.02	34.05	20.04
	7	0.034	0.00	683.2	0.104	-0.027	3.54	3.49	-0.004	-0.000	3.54	3.48	-0.260	-17.776	1.022	0.106	17.78	32.85	19.51
	8	0.038	3.00	686.6	0.100	-0.073	3.62	3.57	0.000	0.000	3.62	3.56	-0.730	-2.292	0.983	0.098	3.77	33.15	20.66
	9	0.035	0.00	687.3	0.041	0.000	3.73	3.75	0.000	0.000	3.73	3.75	0.000	-0.501	0.980	0.040	0.50	21.24	19.83

NO ACSESS TO PORT

Avg. Duct Static = 3.62

	Average Temp.
Yaw Avg. =1.31	
Std. Dev. =3.78	659

		Traverse	Probes
Pitch Avg. =-2.72	Result Angle Avg. =8.74	Avg. Velocity in ft/s	
Std. Dev. =11.61	Std. Dev. =8.97	24.41	20.14

IP7_040234

3D PROBE WORK SHEET

PROJECT:---
Test Run:------
INPUTS

STD. TEMP. DEGREES F (t std)		68				
STD. BAROMETRIC PRESSURE " Hg (Pstd)		29.92				
DUCT SIZE (D)	Traverse	75.000	120.000	75.000	120.000	Flow Element
AVERAGE TEMPERATURE DEGREES F (ts)		675				
AVERAGE PRESSURE IN. W.C. (Pg)		2.70				
ACTUAL BAROMETRIC PRESSURE " Hg (Pbar)		25.50				
% O2 (20.95)		20.95				
% N2 (78.09)		78.09				
% CO2 (0.03)		0.03				
% CO (0.0)		0.00				
%A (0.93)		0.93				
% H2O (0.0)		0.00				

CALCULATIONS

	Traverse	Flow Elem.	% Difference
DRY MOLE FRACTION OF STACK (Mfd) =	1.000	1.000	
STACK PRESSURE " Hg (Ps) =	25.70	25.70	
DRY MOLECULAR WT. OF STACK GAS Lb / Lb -Mole(Md)=	28.966	28.966	
WET MOLECULAR WT. OF STACK GAS Lb / Lb -Mole (Ms)=	28.966	28.966	
STACK AREA SQ. FT (As) =	62.500	62.500	
STACK VELOCITY FT/ SEC. (Vs) =	33.12	31.32	
ACTUAL STACK VOLUME (Q acfm) =	124,186	117,446	-5.43
DRY STANDARD VOLUMETRIC STACK FLOW (Q scfmd) =	49,604	46,912	-5.43
WET STANDARD VOLUMETRIC STACK FLOW (Q scfmw) =	49,604	46,912	-5.43
FLOW IN LBS/HR (wet) =	223611	211475	-5.43
FLOW IN LBS/HR (dry) =	223611	211475	-5.43

GAS DENSITY AT ACTUAL CONDITIONS, LBS/CU.FT.(wet)	0.030010
GAS DENSITY AT STANDARD CONDITIONS, LBS/CU.FT. (wet)	0.075132
GAS DENSITY AT STANDARD CONDITIONS, LBS/CU.FT. (dry)	0.075132

<date>

IP7_040235

Port #	Depth#	Probes Vp In. W.C.	Measured Yaw Angle Degrees	Air Temp. °F	P1 - P23 In.W.C.	Pitch Press. P4 - P5 In.W.C.	P1-Patm (Pt) In. W.C.	P23-Patm Ps Choke In w.c.	From Chart P1-Pt/Pt-Ps TP Coeff.	TP Coeff. * Corrected Pv P1-Pt	(P1-Patm) Minus P1-Pt	P23 Corrected In w.c.	Calculated P4-P5/P1-P23 F1	From Chart Pitch Angle Degrees	From Chart Pt-Ps/P1-P23 (F2)^2	Corrected Pv Pt-Ps In.W.C.	Resultant Angle Degrees	Traverse Point Velocity	Probes Point Velocity
1	1	0.088	-2.00	659.5	0.037	0.000	2.73	2.75	0.000	0.000	2.73	2.75	0.000	-0.501	0.980	0.036	2.06	19.95	31.10
	2	0.088	-2.00	669.6	0.056	0.000	2.80	2.79	0.000	0.000	2.80	2.79	0.000	-0.501	0.980	0.055	2.06	24.65	31.24
	3	0.088	0.00	675.9	0.069	0.000	2.54	2.52	0.000	0.000	2.54	2.52	0.000	-0.501	0.980	0.068	0.50	27.46	31.34
	4	0.088	0.00	679.5	0.041	0.000	2.53	2.55	0.000	0.000	2.53	2.55	0.000	-0.501	0.980	0.040	0.50	21.20	31.38
	5	0.088	0.00	683.4	0.056	-0.012	2.50	2.50	-0.002	-0.000	2.50	2.50	-0.214	-14.974	1.017	0.057	14.97	24.43	31.44
	6	0.088	2.00	687	0.065	0.000	2.64	2.63	0.000	0.000	2.64	2.63	0.000	-0.501	0.980	0.064	2.06	26.77	31.48
	7	0.088	0.00	691.8	0.089	-0.042	2.71	2.67	0.006	0.001	2.71	2.66	-0.472	-33.097	1.180	0.105	33.10	28.88	31.55
	8	0.088	5.00	693.9	0.101	0.000	2.62	2.57	0.000	0.000	2.62	2.56	0.000	-0.501	0.980	0.099	5.02	33.36	31.58
	9	0.088	-7.00	695.7	0.084	0.000	2.60	2.57	0.000	0.000	2.60	2.56	0.000	-0.501	0.980	0.082	7.02	30.34	31.61
	10	0.088	0.00	695.1	0.035	0.000	2.51	2.53	0.000	0.000	2.51	2.53	0.000	-0.501	0.980	0.034	0.50	19.72	31.60
2	1	0.088	-7.00	632.2	0.095	0.023	2.59	2.54	0.000	0.000	2.59	2.53	0.242	19.851	1.015	0.096	21.00	30.03	30.73
	2	0.088	0.00	650.4	0.069	0.022	2.56	2.55	0.000	0.000	2.56	2.55	0.319	19.224	1.012	0.070	19.22	26.06	30.98
	3	0.088	8.00	659.3	0.053	0.025	2.65	2.65	-0.001	-0.000	2.65	2.65	0.472	25.038	1.063	0.056	26.21	22.33	31.10
	4	0.088	10.00	669.6	0.052	0.000	2.85	2.85	0.000	0.000	2.85	2.85	0.000	-0.501	0.980	0.051	10.01	23.40	31.23
	5	0.088	7.00	677.5	0.061	0.029	2.50	2.49	-0.001	-0.000	2.50	2.49	0.475	26.752	1.074	0.065	26.62	24.19	31.36
	6	0.088	-3.00	682.5	0.088	-0.048	2.62	2.59	-0.002	-0.000	2.62	2.58	-0.545	-28.410	1.092	0.096	28.55	28.84	31.42
	7	0.088	-3.00	686.9	0.106	0.050	2.66	2.60	-0.001	-0.000	2.66	2.59	0.472	25.038	1.063	0.113	25.21	32.24	31.48
	8	0.088	-10.00	690.9	0.124	-0.035	2.66	2.59	-0.005	-0.001	2.66	2.58	-0.282	-19.405	1.025	0.127	21.74	35.22	31.54
	9	0.088	-12.00	691.5	0.086	0.000	2.95	2.91	0.000	0.000	2.95	2.90	0.000	-0.501	0.980	0.084	12.01	30.18	31.53
	10	0.088	-10.00	677.8	0.086	-0.009	2.63	2.59	0.000	0.000	2.63	2.58	-0.105	-8.956	1.002	0.086	13.39	30.19	31.36
3	1	0.088	-5.00	620	0.138	0.068	2.92	2.83	-0.000	-0.000	2.92	2.81	0.493	29.679	1.155	0.159	30.06	35.57	30.54
	2	0.088	3.00	635.7	0.109	0.050	2.79	2.73	-0.000	-0.000	2.79	2.72	0.459	22.868	1.038	0.113	23.05	32.10	30.77
	3	0.088	0.00	648.3	0.081	0.000	2.67	2.64	0.000	0.000	2.67	2.63	0.000	-0.501	0.980	0.079	0.50	29.39	30.95
	4	0.088	5.00	656.6	0.068	0.000	2.69	2.68	0.000	0.000	2.69	2.68	0.000	-0.501	0.980	0.067	5.02	26.92	31.06
	5	0.088	10.00	664	0.061	0.000	2.73	2.72	0.000	0.000	2.73	2.72	0.000	-0.501	0.980	0.060	10.01	25.29	31.16
	6	0.088	15.00	671.1	0.071	0.034	2.76	2.74	-0.001	-0.000	2.76	2.74	0.479	26.458	1.085	0.077	30.14	25.30	31.26
	7	0.088	7.00	676.2	0.089	-0.014	2.92	2.88	-0.001	-0.000	2.92	2.87	-0.157	-11.939	1.010	0.090	13.81	30.75	31.32
	8	0.088	8.00	682.2	0.114	-0.024	2.87	2.81	-0.002	-0.000	2.87	2.80	-0.211	-14.763	1.016	0.116	16.75	34.51	31.41
	9	0.088	0.00	687.3	0.147	-0.004	2.72	2.63	0.000	0.000	2.72	2.61	-0.027	-3.084	0.985	0.145	3.08	40.33	31.49
	10	0.088	-5.00	687.3	0.076	0.007	2.67	2.65	-0.000	-0.000	2.67	2.65	0.092	9.372	0.983	0.075	10.61	28.51	31.49
4	1	0.088	0.00	635.9	0.176	-0.056	3.07	2.94	-0.006	-0.001	3.07	2.92	-0.318	-22.319	1.035	0.182	22.32	40.95	30.76
	2	0.088	0.00	652	0.142	0.050	2.91	2.82	0.000	0.000	2.91	2.80	0.352	18.415	1.008	0.143	18.41	37.50	30.99
	3	0.088	0.00	664.4	0.121	0.050	2.77	2.70	0.000	0.000	2.77	2.69	0.413	18.686	1.009	0.122	18.69	34.78	31.17
	4	0.088	-4.00	671.7	0.105	0.050	2.70	2.64	-0.001	-0.000	2.70	2.63	0.476	25.908	1.076	0.113	26.19	31.80	31.27
	5	0.088	0.00	681.2	0.108	0.024	2.75	2.70	0.000	0.000	2.75	2.69	0.222	19.366	1.013	0.109	19.37	33.02	31.40
	6	0.088	0.00	685.2	0.114	-0.001	2.82	2.76	0.000	0.000	2.82	2.75	-0.009	-1.361	0.981	0.112	1.36	35.45	31.45
	7	0.088	5.00	690	0.125	0.050	3.01	2.93	0.000	0.000	3.01	2.92	0.400	18.256	1.007	0.126	18.91	35.66	31.51
	8	0.088	-3.00	693.6	0.133	-0.021	2.95	2.87	-0.001	-0.000	2.95	2.86	-0.158	-11.970	1.010	0.134	12.33	38.10	31.56
	9	0.088	-3.00	696	0.173	-0.021	2.92	2.80	0.000	0.000	2.92	2.78	-0.121	-9.964	1.005	0.174	10.40	43.68	31.60
	10	0.088	-5.00	698.4	0.125	0.050	2.76	2.68	0.000	0.000	2.76	2.67	0.400	18.256	1.007	0.126	18.91	35.80	31.64
5	1	0.088	0.00	633	0.218	0.050	3.15	2.98	0.000	0.000	3.15	2.95	0.229	19.578	1.014	0.221	19.58	45.86	30.72
	2	0.088	3.00	661.7	0.202	0.100	2.95	2.80	0.000	0.000	2.95	2.77	0.495	30.274	1.170	0.236	30.41	44.00	31.13
	3	0.088	5.00	671.3	0.184	0.050	2.90	2.77	-0.000	-0.000	2.90	2.75	0.272	20.013	1.016	0.187	20.60	42.65	31.26
	4	0.088	5.00	678.9	0.172	0.050	2.75	2.62	0.000	0.000	2.75	2.60	0.291	19.814	1.015	0.175	20.41	41.41	31.37
	5	0.088	5.00	687.3	0.176	-0.021	2.92	2.79	0.000	0.000	2.92	2.77	-0.119	-9.844	1.005	0.177	11.03	43.80	31.48
	6	0.088	7.00	692.9	0.207	-0.026	2.98	2.82	-0.000	-0.000	2.98	2.79	-0.126	-10.208	1.006	0.208	12.36	47.41	31.56
	7	0.088	5.00	696.3	0.175	0.018	3.04	2.91	0.000	0.000	3.04	2.89	0.103	10.512	0.985	0.172	11.63	43.32	31.60
	8	0.088	4.00	698.4	0.181	-0.011	3.00	2.86	0.000	0.000	3.00	2.84	-0.061	-5.899	0.993	0.180	7.12	44.85	31.63
	9	0.088	0.00	700.2	0.207	-0.025	2.90	2.74	0.000	0.000	2.90	2.71	-0.121	-9.929	1.005	0.208	9.93	47.95	31.66
	10	0.088	-5.00	701.1	0.168	-0.075	2.84	2.72	0.005	0.001	2.84	2.70	-0.446	-32.475	1.167	0.196	32.82	39.73	31.67

NO ACSESS TO PORT

Avg. Duct Static = 2.70

	Average Temp.
Yaw Avg. =0.66	
Std. Dev. =5.52	675

Pitch Avg. =3.35
Std. Dev. =16.91

Resul Angle Avg. =15.15
Std. Dev. =9.64

Traverse Avg. Velocity in ft/s	Probes
33.12	31.32

IP7_040236

3D PROBE WORK SHEET

PROJECT:---
Test Run:-----
INPUTS

STD. TEMP. DEGREES F (t std)		68				
STD. BAROMETRIC PRESSURE " Hg (Pstd)		29.92				
DUCT SIZE (D)	Traverse	75.000	120.000	75.000	120.000	Flow Element
AVERAGE TEMPERATURE DEGREES F (ts)		678				
AVERAGE PRESSURE IN. W.C. (Pg)		2.04				
ACTUAL BAROMETRIC PRESSURE " Hg (Pbar)		25.50				
% O2 (20.95)		20.95				
% N2 (78.09)		78.09				
% CO2 (0.03)		0.03				
% CO (0.0)		0.00				
%A (0.93)		0.93				
% H2O (0.0)		0.00				

CALCULATIONS

	Traverse	Flow Elem.	% Difference
DRY MOLE FRACTION OF STACK (Mfd) =	1.000	1.000	
STACK PRESSURE " Hg (Ps) =	25.65	25.65	
DRY MOLECULAR WT. OF STACK GAS Lb / Lb -Mole(Md)=	28.966	28.966	
WET MOLECULAR WT. OF STACK GAS Lb / Lb -Mole (Ms)=	28.966	28.966	
STACK AREA SQ. FT (As) =	62.500	62.500	
STACK VELOCITY FT/ SEC. (Vs) =	37.14	36.45	
ACTUAL STACK VOLUME (Q acfm) =	139,289	136,689	-1.87
DRY STANDARD VOLUMETRIC STACK FLOW (Q scfmd) =	55,418	54,384	-1.87
WET STANDARD VOLUMETRIC STACK FLOW (Q scfmw) =	55,418	54,384	-1.87
FLOW IN LBS/HR (wet) =	249820	245158	-1.87
FLOW IN LBS/HR (dry) =	249820	245158	-1.87

GAS DENSITY AT ACTUAL CONDITIONS, LBS/CU.FT.(wet)	0.029892
GAS DENSITY AT STANDARD CONDITIONS, LBS/CU.FT. (wet)	0.075132
GAS DENSITY AT STANDARD CONDITIONS, LBS/CU.FT. (dry)	0.075132

<date>

IP7_040237

Port #	Depth#	Probes Vp In.W.C.	Measured Yaw Angle Degrees	Air Temp. °F	P1 - P23 In.W.C.	Pitch Press. P4 - P5 In.W.C.	P1-Patm (Pt) In. W.C.	P23-Patm (Ps Choke In w.c.	From Chart P1-Pt/Pt-Ps TP Coeff.	TP Coeff. * Corrected Pv P1-Pt	(P1-Patm) Minus P1-Pt	P23 Corrected In w.c.	Calculated P4-P5/P1-P23 F1	From Chart Pitch Angle Degrees	From Chart Pt-Ps/P1-P23 (F2)^2	Corrected Pv Pt-Ps In.W.C.	Resultant Angle Degrees	Traverse Point Velocity	Probes Point Velocity
1	1	0.117	20.00	632	0.074	0.000	2.11	2.06	0.000	0.000	2.11	2.05	0.000	-0.501	0.980	0.072	20.01	26.22	35.45
	2	0.119	10.00	643.2	0.085	0.000	1.98	1.92	0.000	0.000	1.98	1.91	0.000	-0.501	0.980	0.083	10.01	29.61	35.94
	3	0.113	5.00	654.9	0.111	0.050	1.99	1.90	-0.000	-0.000	1.99	1.88	0.450	21.737	1.028	0.114	22.28	32.74	35.21
	4	0.107	5.00	663.3	0.081	0.000	1.98	1.91	0.000	0.000	1.98	1.90	0.000	-0.501	0.980	0.079	5.02	29.50	34.39
	5	0.111	20.00	671	0.063	0.000	2.16	2.12	0.000	0.000	2.16	2.11	0.000	-0.501	0.980	0.062	20.01	24.62	35.14
	6	0.123	20.00	676.7	0.073	-0.039	2.19	2.14	-0.000	-0.000	2.19	2.13	-0.534	-29.856	1.115	0.081	35.42	24.59	37.08
	7	0.118	10.00	681	0.106	-0.076	2.06	1.98	-0.000	-0.000	2.06	1.97	-0.717	1.182	0.978	0.104	10.07	33.58	36.40
	8	0.116	5.00	686.5	0.117	0.050	2.08	1.99	0.000	0.000	2.08	1.97	0.427	19.492	1.013	0.119	20.10	34.34	36.17
	9	0.122	4.00	690.3	0.112	0.050	1.97	1.88	-0.000	-0.000	1.97	1.86	0.446	21.253	1.024	0.115	21.61	33.50	37.16
	10	0.113	0.00	691.5	0.041	0.000	2.09	2.07	0.000	0.000	2.09	2.07	0.000	-0.501	0.980	0.040	0.50	21.33	35.77
2	1	0.121	-10.00	664.6	0.179	0.050	2.28	2.12	0.000	0.000	2.28	2.09	0.279	19.958	1.016	0.182	22.23	41.51	36.58
	2	0.118	-5.00	673	0.133	0.050	2.30	2.19	0.000	0.000	2.30	2.17	0.376	18.078	1.006	0.134	18.73	36.57	36.26
	3	0.117	5.00	679.7	0.087	0.000	2.34	2.27	0.000	0.000	2.34	2.26	0.000	-0.501	0.980	0.085	5.02	30.78	36.21
	4	0.123	-10.00	684.4	0.057	0.000	2.31	2.28	0.000	0.000	2.31	2.27	0.000	-0.501	0.980	0.056	10.01	24.68	37.20
	5	0.129	15.00	688.7	0.052	0.000	2.19	2.16	0.000	0.000	2.19	2.15	0.000	-0.501	0.980	0.051	15.01	23.17	38.17
	6	0.117	20.00	692.4	0.070	-0.024	2.11	2.07	-0.006	-0.000	2.11	2.06	-0.343	-24.502	1.048	0.073	31.23	24.66	36.42
	7	0.120	15.00	695.5	0.101	-0.054	2.14	2.05	-0.000	-0.000	2.14	2.03	-0.535	-29.809	1.115	0.113	33.06	29.98	36.93
	8	0.127	5.00	697.8	0.133	0.050	2.16	2.05	0.000	0.000	2.16	2.03	0.376	18.078	1.006	0.134	18.73	36.98	38.03
	9	0.122	-5.00	700.3	0.174	-0.050	2.38	2.22	-0.005	-0.001	2.38	2.19	-0.287	-19.795	1.026	0.179	20.39	42.31	37.31
	10	0.126	0.00	700	0.110	-0.077	2.36	2.26	-0.000	-0.000	2.36	2.24	-0.700	2.657	0.977	0.107	2.66	34.97	37.91
3	1	0.127	-8.00	625.4	0.212	-0.014	2.16	1.97	0.000	0.000	2.16	1.94	-0.066	-6.302	0.994	0.211	10.17	46.69	36.83
	2	0.115	-5.00	643.4	0.147	0.063	2.18	2.05	0.000	0.000	2.18	2.03	0.429	19.580	1.014	0.149	20.18	37.75	35.33
	3	0.115	-2.00	653.8	0.109	0.050	2.19	2.11	-0.000	-0.000	2.19	2.10	0.459	22.868	1.038	0.113	22.95	32.41	35.49
	4	0.115	3.00	662.7	0.076	0.000	2.12	2.07	0.000	0.000	2.12	2.06	0.000	-0.501	0.980	0.074	3.04	28.63	35.64
	5	0.113	3.00	668.3	0.067	0.000	1.93	1.89	0.000	0.000	1.93	1.88	0.000	-0.501	0.980	0.066	3.04	26.96	35.42
	6	0.111	2.00	674.1	0.081	0.000	1.89	1.83	0.000	0.000	1.89	1.82	0.000	-0.501	0.980	0.079	2.06	29.74	35.20
	7	0.114	2.00	680.2	0.099	0.003	1.93	1.86	-0.000	-0.000	1.93	1.85	0.030	2.635	0.977	0.097	3.31	32.89	35.77
	8	0.116	4.00	684.2	0.132	-0.058	1.97	1.86	0.004	0.001	1.97	1.84	-0.439	-32.156	1.160	0.153	32.38	35.08	36.14
	9	0.122	-10.00	690.6	0.180	-0.050	2.10	1.93	-0.005	-0.001	2.10	1.90	-0.278	-19.069	1.025	0.184	21.45	42.54	37.17
	10	0.122	-5.00	691.9	0.122	0.003	2.10	1.99	-0.000	-0.000	2.10	1.97	0.025	2.027	0.977	0.119	5.39	36.59	37.18
4	1	0.126	-8.00	641.2	0.244	-0.014	2.22	1.99	0.000	0.000	2.22	1.95	-0.057	-5.633	0.992	0.242	9.77	50.46	36.95
	2	0.112	5.00	657.6	0.167	0.088	2.18	2.03	-0.007	-0.002	2.18	2.00	0.527	40.484	1.405	0.235	40.74	38.48	35.09
	3	0.116	4.00	667.2	0.137	0.050	2.21	2.09	0.000	0.000	2.21	2.07	0.365	18.187	1.007	0.138	18.61	37.06	35.86
	4	0.112	5.00	674.1	0.143	-0.054	2.38	2.26	-0.003	-0.001	2.38	2.24	0.378	27.637	1.081	0.155	28.05	36.63	35.34
	5	0.120	10.00	680.4	0.133	0.057	2.39	2.28	0.000	0.000	2.39	2.26	0.429	19.580	1.014	0.135	21.90	36.07	36.68
	6	0.125	6.00	686	0.135	0.047	2.25	2.13	0.000	0.000	2.25	2.11	0.348	18.500	1.008	0.136	19.42	36.94	37.53
	7	0.123	10.00	692.1	0.145	-0.043	2.19	2.06	-0.005	-0.001	2.19	2.04	-0.297	-20.518	1.028	0.149	22.73	37.92	37.34
	8	0.120	8.00	695.4	0.175	-0.075	2.15	1.99	0.003	0.001	2.15	1.96	-0.429	-31.563	1.148	0.201	32.46	40.33	36.93
	9	0.121	2.00	698.3	0.215	-0.153	2.32	2.12	-0.000	-0.000	2.32	2.09	-0.712	1.978	0.977	0.210	2.81	48.86	37.13
	10	0.120	2.00	699.7	0.126	0.023	2.17	2.06	0.000	0.000	2.17	2.04	0.183	17.460	1.004	0.126	17.57	36.22	37.00
5	1	0.121	5.00	649.5	0.298	-0.076	2.40	2.12	-0.004	-0.001	2.40	2.07	-0.255	-17.467	1.021	0.304	18.15	54.77	36.34
	2	0.130	3.00	666.7	0.248	0.050	2.38	2.15	0.000	0.000	2.38	2.11	0.202	18.531	1.008	0.250	18.76	49.84	37.95
	3	0.120	3.00	675.3	0.247	0.050	2.35	2.12	0.000	0.000	2.35	2.08	0.202	18.571	1.009	0.249	18.80	49.93	36.61
	4	0.111	0.00	682.3	0.242	0.038	2.48	2.25	0.000	0.000	2.48	2.21	0.157	15.617	0.998	0.241	15.62	50.15	35.31
	5	0.119	7.00	688.7	0.240	0.037	2.51	2.29	0.000	0.000	2.51	2.25	0.154	15.384	0.997	0.239	16.87	49.74	36.66
	6	0.123	5.00	693.1	0.233	0.050	2.23	2.02	0.000	0.000	2.23	1.98	0.215	19.098	1.011	0.236	19.72	48.67	37.35
	7	0.117	5.00	696.4	0.233	0.004	2.25	2.03	-0.000	-0.000	2.25	1.99	0.017	1.248	0.978	0.228	5.15	50.70	36.48
	8	0.119	4.00	698.7	0.229	-0.030	2.19	1.98	-0.000	-0.000	2.19	1.94	-0.131	-10.514	1.006	0.230	11.24	50.28	36.83
	9	0.113	0.00	700.5	0.250	-0.010	2.09	1.86	0.000	0.000	2.09	1.82	-0.040	-4.207	0.988	0.247	4.21	52.97	35.93
	10	0.122	1.00	699.8	0.136	-0.052	2.12	2.00	-0.003	-0.000	2.12	1.98	-0.382	-28.052	1.086	0.148	28.07	36.23	37.31

NO ACSESS TO PORT

Avg. Duct Static = 2.04

	Average Temp.
Yaw Avg. = 4.20	678
Std. Dev. = 7.31	

		Traverse	Probes
Pitch Avg. = 1.23	Resul Angle Avg. = 16.73	Avg. Velocity in ft/s	
Std. Dev. = 17.72	Std. Dev. = 9.93	37.14	36.45

IP7_040238

3D PROBE WORK SHEET

PROJECT:---
Test Run:------
INPUTS

STD. TEMP. DEGREES F (t std)		68				
STD. BAROMETRIC PRESSURE " Hg (Pstd)		29.92				
DUCT SIZE (D)	Traverse	75.000	120.000	75.000	120.000	Flow Element
AVERAGE TEMPERATURE DEGREES F (ts)		656				
AVERAGE PRESSURE IN. W.C. (Pg)		3.46				
ACTUAL BAROMETRIC PRESSURE " Hg (Pbar)		25.50				
% O2 (20.95)		20.95				
% N2 (78.09)		78.09				
% CO2 (0.03)		0.03				
% CO (0.0)		0.00				
%A (0.93)		0.93				
% H2O (0.0)		0.00				

CALCULATIONS

	Traverse	Flow Elem.	% Difference
DRY MOLE FRACTION OF STACK (Mfd) =	1.000	1.000	
STACK PRESSURE " Hg (Ps) =	25.75	25.75	
DRY MOLECULAR WT. OF STACK GAS Lb / Lb -Mole(Md)=	28.966	28.966	
WET MOLECULAR WT. OF STACK GAS Lb / Lb -Mole (Ms)=	28.966	28.966	
STACK AREA SQ. FT (As) =	62.500	62.500	
STACK VELOCITY FT/ SEC. (Vs) =	27.04	18.15	
ACTUAL STACK VOLUME (Q acfm) =	101,396	68,073	-32.86
DRY STANDARD VOLUMETRIC STACK FLOW (Q scfmd) =	41,310	27,734	-32.86
WET STANDARD VOLUMETRIC STACK FLOW (Q scfmw) =	41,310	27,734	-32.86
FLOW IN LBS/HR (wet) =	186222	125022	-32.86
FLOW IN LBS/HR (dry) =	186222	125022	-32.86

GAS DENSITY AT ACTUAL CONDITIONS, LBS/CU.FT.(wet)	0.030610
GAS DENSITY AT STANDARD CONDITIONS, LBS/CU.FT. (wet)	0.075132
GAS DENSITY AT STANDARD CONDITIONS, LBS/CU.FT. (dry)	0.075132

<date>

IP7_040239

Port #	Depth#	Probes Vp In. W.C.	Measured Yaw Angle Degrees	Air Temp. °F	P1 - P23 In.W.C.	Pitch Press. P4 - P5 In.W.C.	P1-Patm (Pt) In. W.C.	P23-Patm Ps Choke In w.c.	From Chart P1-Pt/Pt-Ps TP Coeff.	TP Coeff. * Corrected Pv P1-Pt	(P1-Patm) Minus P1-Pt	P23 Corrected In w.c.	Calculated P4-P5/P1-P23 F1	From Chart Pitch Angle Degrees	From Chart Pt-Ps/P1-P23 (F2)^2	Corrected Pv Pt-Ps In.W.C.	Resultant Angle Degrees	Traverse Point Velocity	Probes Point Velocity
1	1					0.000													
	2	0.029	-20.00	593.1	0.026	0.000	3.45	3.44	0.000	0.000	3.45	3.44	0.000	-0.501	0.980	0.025	20.01	15.23	17.30
	3	0.025	0.00	620.4	0.047	-0.033	3.48	3.45	-0.000	-0.000	3.48	3.44	-0.702	2.630	0.977	0.046	2.63	22.02	16.27
	4	0.027	0.00	632.8	0.055	-0.033	3.50	3.47	-0.004	-0.000	3.50	3.46	-0.600	-17.620	1.022	0.056	17.62	23.38	17.00
	5	0.030	0.00	644.5	0.058	0.000	3.42	3.38	0.000	0.000	3.42	3.37	0.000	-0.501	0.980	0.057	0.50	24.80	18.02
	6	0.029	0.00	654.7	0.066	0.005	3.43	3.39	-0.000	-0.000	3.43	3.38	0.076	7.598	0.980	0.065	7.60	26.35	17.80
	7	0.030	0.00	663.2	0.069	-0.050	3.45	3.40	0.000	0.000	3.45	3.39	-0.725	-0.576	0.980	0.068	0.58	27.28	18.17
	8	0.031	0.00	669.8	0.069	0.009	3.48	3.43	0.000	0.000	3.48	3.42	0.130	13.275	0.991	0.068	13.28	26.78	18.52
	9	0.031	0.00	674.8	0.088	-0.064	3.61	3.55	0.000	0.000	3.61	3.54	-0.727	-1.366	0.981	0.086	1.37	30.97	18.56
	10	0.031	-5.00	680.2	0.098	-0.012	3.52	3.44	-0.000	-0.000	3.52	3.43	-0.122	-10.026	1.005	0.098	11.19	32.54	18.61
2	1	0.03	3.00	602.4	0.032	-0.015	3.64	3.63	0.000	0.000	3.64	3.63	-0.469	33.070	1.180	0.038	33.19	16.58	17.67
	2	0.03	-7.00	616.4	0.034	-0.020	3.66	3.64	-0.005	-0.000	3.66	3.64	-0.588	-20.413	1.028	0.035	21.53	17.86	17.78
	3	0.027	0.00	628.1	0.035	-0.018	3.76	3.75	0.003	0.000	3.76	3.75	-0.514	-31.747	1.152	0.040	31.75	17.62	16.96
	4	0.028	3.00	641	0.047	-0.017	3.55	3.52	-0.005	-0.000	3.55	3.51	-0.362	-26.210	1.064	0.050	26.37	20.80	17.38
	5	0.03	2.00	649.7	0.045	-0.020	3.47	3.45	0.004	0.000	3.47	3.45	-0.444	-32.391	1.165	0.052	32.45	20.15	18.06
	6	0.032	3.00	659.6	0.061	-0.018	3.44	3.40	-0.005	-0.000	3.44	3.39	-0.295	-20.401	1.028	0.063	20.61	24.55	18.74
	7	0.03	0.00	665.6	0.069	-0.023	3.63	3.58	-0.006	-0.000	3.63	3.57	-0.333	-23.647	1.042	0.072	23.65	25.79	18.19
	8	0.03	-3.00	672.5	0.082	-0.017	3.71	3.65	-0.002	-0.000	3.71	3.64	-0.207	-14.586	1.016	0.083	14.88	29.38	18.24
	9	0.032	-3.00	677.7	0.097	-0.021	3.82	3.74	-0.002	-0.000	3.82	3.73	-0.216	-15.099	1.017	0.099	15.39	31.96	18.88
	10	0.03	-10.00	682.6	0.117	-0.011	3.74	3.64	0.000	0.000	3.74	3.62	-0.094	-8.274	1.000	0.117	12.95	35.26	18.32
3	1	0.03	-4.00	610.8	0.028	0.005	3.69	3.68	0.000	0.000	3.69	3.68	0.179	17.202	1.003	0.028	17.65	16.35	17.73
	2	0.031	0.00	621.9	0.023	-0.001	3.48	3.47	0.000	0.000	3.48	3.47	-0.043	-4.502	0.989	0.023	4.50	15.48	18.13
	3	0.029	-2.00	634.5	0.026	0.001	3.43	3.43	-0.000	-0.000	3.43	3.43	0.038	3.513	0.977	0.025	4.04	16.46	17.63
	4	0.029	-10.00	651.9	0.040	-0.001	3.58	3.56	0.000	0.000	3.58	3.56	-0.025	-2.884	0.984	0.039	10.40	20.37	17.77
	5	0.031	-2.00	661.7	0.046	0.000	3.70	3.68	0.000	0.000	3.70	3.68	0.000	-0.501	0.980	0.045	2.06	22.23	18.45
	6	0.031	-3.00	667.5	0.057	0.000	3.79	3.76	0.000	0.000	3.79	3.75	0.000	-0.501	0.980	0.056	3.04	24.79	18.50
	7	0.032	-3.00	672.2	0.065	-0.002	3.56	3.52	0.000	0.000	3.56	3.51	-0.031	-3.403	0.986	0.064	4.54	26.57	18.84
	8	0.032	-7.00	678	0.077	0.000	3.49	3.43	0.000	0.000	3.49	3.42	0.000	-0.501	0.980	0.075	7.02	28.79	18.89
	9	0.03	-18.00	682.8	0.100	-0.002	3.48	3.40	0.000	0.000	3.48	3.39	-0.020	-2.424	0.983	0.098	18.16	31.53	18.33
	10	0.028	-7.00	683.5	0.115	-0.003	3.65	3.55	0.000	0.000	3.65	3.53	-0.026	-2.983	0.985	0.113	7.61	35.30	17.71
4	1	0.029	-7.00	624.7	0.031	0.009	3.30	3.29	0.000	0.000	3.30	3.29	0.290	19.820	1.015	0.031	20.97	17.08	17.56
	2	0.029	0.00	634.1	0.032	0.013	3.31	3.30	0.000	0.000	3.31	3.30	0.406	18.425	1.008	0.032	18.43	17.64	17.63
	3	0.028	0.00	642.9	0.042	0.006	3.45	3.43	0.000	0.000	3.45	3.43	0.143	14.416	0.994	0.042	14.42	20.57	17.39
	4	0.028	0.00	650.5	0.049	0.009	3.53	3.50	0.000	0.000	3.53	3.49	0.184	17.531	1.004	0.049	17.53	22.06	17.45
	5	0.031	0.00	656.9	0.049	0.014	3.39	3.36	0.000	0.000	3.39	3.35	0.286	19.885	1.015	0.050	19.89	21.94	18.42
	6	0.032	0.00	663.8	0.067	0.016	3.25	3.21	0.000	0.000	3.25	3.20	0.239	19.793	1.015	0.068	19.79	25.75	18.78
	7	0.03	0.00	669.5	0.071	0.010	3.33	3.27	0.000	0.000	3.33	3.26	0.141	14.237	0.994	0.071	14.24	27.09	18.23
	8	0.031	0.00	674.2	0.087	0.012	3.31	3.25	0.000	0.000	3.31	3.24	0.138	13.973	0.993	0.086	13.97	30.08	18.57
	9	0.03	-5.00	679.2	0.097	0.010	3.29	3.21	0.000	0.000	3.29	3.20	0.103	10.536	0.985	0.096	11.65	31.99	18.30
	10	0.028	-5.00	682.5	0.110	0.006	3.50	3.41	-0.000	-0.000	3.50	3.39	0.055	5.268	0.977	0.108	7.26	34.42	17.70
5	1	0.03	3.00	619.5	0.037	-0.007	3.27	3.25	-0.001	-0.000	3.27	3.25	-0.189	-13.609	1.014	0.038	13.93	19.34	17.82
	2	0.029	3.00	632.7	0.056	0.015	3.45	3.40	-0.000	-0.000	3.45	3.39	0.268	20.027	1.016	0.057	20.24	23.16	17.62
	3	0.031	5.00	643.1	0.080	0.015	3.57	3.51	0.000	0.000	3.57	3.50	0.188	17.765	1.005	0.080	18.43	27.96	18.30
	4	0.031	3.00	651.9	0.097	0.022	3.47	3.39	0.000	0.000	3.47	3.38	0.227	19.507	1.013	0.098	19.73	30.80	18.38
	5	0.032	0.00	659.2	0.105	0.031	3.53	3.45	0.000	0.000	3.53	3.44	0.295	19.738	1.015	0.107	19.74	32.17	18.73
	6	0.032	3.00	665.9	0.107	0.034	3.49	3.40	0.000	0.000	3.49	3.38	0.318	19.251	1.012	0.108	19.47	32.58	18.79
	7	0.031	0.00	671.1	0.112	0.040	3.42	3.33	0.000	0.000	3.42	3.31	0.357	18.315	1.007	0.113	18.32	33.58	18.54
	8	0.033	-7.00	675.9	0.109	0.043	3.48	3.39	0.000	0.000	3.48	3.37	0.394	18.153	1.007	0.110	19.41	32.96	19.17
	9	0.031	-10.00	681.5	0.103	0.028	3.65	3.56	-0.000	-0.000	3.65	3.54	0.272	20.012	1.016	0.105	22.28	31.65	18.62
	10	0.031	-9.00	683.9	0.082	0.014	3.57	3.51	0.000	0.000	3.57	3.50	0.171	16.662	1.001	0.082	18.88	28.70	18.64
6	1	0.031	-10.00	620.9	0.103	0.001	3.63	3.54	-0.000	-0.000	3.63	3.52	0.010	0.478	0.978	0.101	10.01	32.17	18.12
	2	0.033	0.00	635.9	0.095	0.011	3.57	3.49	0.000	0.000	3.57	3.48	0.116	11.842	0.988	0.094	11.84	31.07	18.82
	3	0.029	0.00	646.8	0.136	0.026	3.59	3.47	0.000	0.000	3.59	3.45	0.191	17.979	1.006	0.137	17.98	36.64	17.73
	4	0.03	0.00	658.8	0.152	0.049	3.64	3.51	0.000	0.000	3.64	3.49	0.322	19.136	1.011	0.154	19.14	38.78	18.13
	5	0.032	-2.00	666	0.138	0.055	3.63	3.51	0.000	0.000	3.63	3.49	0.399	18.225	1.007	0.139	18.33	37.17	18.79
	6	0.031	-3.00	671.4	0.140	0.069	3.71	3.59	-0.000	-0.000	3.71	3.57	0.493	29.705	1.155	0.162	29.84	36.72	18.53
	7	0.032	-2.00	675.6	0.121	0.007	3.57	3.47	-0.000	-0.000	3.57	3.45	0.058	5.631	0.978	0.118	5.97	36.08	18.87
	8	0.029	-4.00	678.6	0.110	0.025	3.47	3.38	0.000	0.000	3.47	3.36	0.227	19.521	1.013	0.111	19.91	33.16	17.99
	9	0.029	-5.00	681.9	0.099	0.045	3.43	3.34	-0.000	-0.000	3.43	3.32	0.455	22.274	1.032	0.102	22.80	31.18	18.02
	10	0.032	-4.00	684	0.105	0.007	3.45	3.36	-0.000	-0.000	3.45	3.34	0.057	6.600	0.979	0.103	7.71	33.64	18.94

Avg. Duct Static = 3.46

Yaw Avg. =-2.29 | Average Temp. | Pitch Avg. =3.92 | Result Angle Avg. = 15.23 | Traverse Avg. Velocity in ft/s | Probes Velocity in ft/s

Std. Dev. =4.99	656	Std. Dev. =15.98	Std. Dev. =8.04	27.04	18.15

IP7_040240

IP7_040241

3D PROBE WORK SHEET

PROJECT:---
Test Run:-----
INPUTS

STD. TEMP. DEGREES F (t std)		68				
STD. BAROMETRIC PRESSURE " Hg (Pstd)		29.92				
DUCT SIZE (D)	Traverse	75.000	120.000	75.000	120.000	Flow Element
AVERAGE TEMPERATURE DEGREES F (ts)		656				
AVERAGE PRESSURE IN. W.C. (Pg)		2.59				
ACTUAL BAROMETRIC PRESSURE " Hg (Pbar)		25.50				
% O2 (20.95)		20.95				
% N2 (78.09)		78.09				
% CO2 (0.03)		0.03				
% CO (0.0)		0.00				
%A (0.93)		0.93				
% H2O (0.0)		0.00				

CALCULATIONS

	Traverse	Flow Elem.	% Difference
DRY MOLE FRACTION OF STACK (Mfd) =	1.000	1.000	
STACK PRESSURE " Hg (Ps) =	25.69	25.69	
DRY MOLECULAR WT. OF STACK GAS Lb / Lb -Mole(Md)=	28.966	28.966	
WET MOLECULAR WT. OF STACK GAS Lb / Lb -Mole (Ms)=	28.966	28.966	
STACK AREA SQ. FT (As) =	62.500	62.500	
STACK VELOCITY FT/ SEC. (Vs) =	36.49	30.88	
ACTUAL STACK VOLUME (Q acfm) =	136,831	115,793	-15.38
DRY STANDARD VOLUMETRIC STACK FLOW (Q scfmd) =	55,577	47,032	-15.38
WET STANDARD VOLUMETRIC STACK FLOW (Q scfmw) =	55,577	47,032	-15.38
FLOW IN LBS/HR (wet) =	250536	212016	-15.38
FLOW IN LBS/HR (dry) =	250536	212016	-15.38

GAS DENSITY AT ACTUAL CONDITIONS, LBS/CU.FT.(wet)	0.030517
GAS DENSITY AT STANDARD CONDITIONS, LBS/CU.FT. (wet)	0.075132
GAS DENSITY AT STANDARD CONDITIONS, LBS/CU.FT. (dry)	0.075132

<date>

IP7_040242

Port #	Depth#	Probes Vp In.W.C.	Measured Yaw Angle Degrees	Air Temp. °F	P1 - P23 In.W.C.	Pitch Press. P4 - P5 In.W.C.	P1-Patm (Ph) In.W.C.	P23-Patm Ps Choke In.w.c.	From Chart P1-Pt/Pt-Ps TP Coeff.	TP Coeff. * Corrected Pv P1-Pt	(P1-Patm) Minus P1-Pt	P23 Corrected In w.c.	Calculated P4-P5/P1-P23 F1	From Chart Pitch Angle Degrees	From Chart Pt-Ps/P1-P23 (F2)^2	Corrected Pv Pt-Ps In.W.C.	Resultant Angle Degrees	Traverse Point Velocity	Probes Point Velocity
1	1	0.088	-12.00	637.5	0.040	-0.014	2.80	2.78	-0.005	-0.000	2.80	2.78	-0.350	-25.148	1.053	0.042	27.70	18.87	30.79
	2	0.085	5.00	589.4	0.043	-0.017	2.55	2.52	-0.001	-0.000	2.55	2.51	-0.395	-29.155	1.103	0.047	29.54	19.24	29.60
	3	0.086	8.00	604.2	0.091	-0.058	2.67	2.59	0.000	0.000	2.67	2.58	-0.637	-7.942	0.999	0.091	11.25	30.23	29.98
	4	0.084	5.00	619.2	0.106	-0.064	2.81	2.71	-0.003	-0.000	2.81	2.69	-0.604	-16.684	1.020	0.108	17.40	32.30	29.83
	5	0.086	2.00	633.3	0.103	-0.074	2.82	2.73	-0.000	-0.000	2.82	2.71	-0.718	0.904	0.978	0.101	2.19	32.86	30.38
	6	0.087	0.00	642.8	0.128	-0.053	2.77	2.65	0.001	0.000	2.77	2.63	-0.414	-30.604	1.129	0.145	30.60	34.05	30.69
	7	0.085	0.00	653.9	0.141	-0.047	2.63	2.50	-0.006	-0.001	2.63	2.48	-0.333	-23.647	1.042	0.147	23.65	36.74	30.50
	8	0.083	10.00	661.6	0.143	-0.033	2.62	2.49	-0.003	-0.000	2.62	2.47	-0.231	-15.931	1.019	0.146	18.74	37.94	30.24
	9	0.087	18.00	666.9	0.170	-0.028	2.67	2.52	-0.001	-0.000	2.67	2.49	-0.165	-12.327	1.011	0.172	21.70	40.53	31.03
	10	0.086	5.00	672.2	0.180	0.001	2.70	2.53	-0.000	-0.000	2.70	2.50	0.006	0.056	0.979	0.176	5.00	44.10	30.93
2	1	0.086	-5.00	623.3	0.043	-0.026	2.45	2.42	-0.003	-0.000	2.45	2.41	-0.605	-16.464	1.020	0.044	17.19	20.64	30.26
	2	0.088	-8.00	625.3	0.047	-0.028	2.47	2.44	-0.004	-0.000	2.47	2.43	-0.596	-18.654	1.024	0.048	20.24	21.25	30.63
	3	0.085	-2.00	629.8	0.058	-0.027	2.59	2.55	0.006	0.000	2.59	2.54	-0.466	-33.027	1.179	0.058	33.08	22.67	30.16
	4	0.083	8.00	638.1	0.065	-0.021	2.71	2.66	-0.006	-0.000	2.71	2.65	-0.323	-22.743	1.037	0.067	24.04	24.62	29.92
	5	0.085	-6.00	646.3	0.054	-0.013	2.64	2.60	-0.003	-0.000	2.64	2.59	-0.241	-19.542	1.020	0.055	17.57	23.32	30.39
	6	0.087	0.00	654.5	0.089	-0.014	2.56	2.48	-0.001	-0.000	2.56	2.47	-0.157	-11.939	1.010	0.090	11.94	30.70	30.86
	7	0.087	7.00	704.4	0.124	-0.017	2.55	2.44	-0.000	-0.000	2.55	2.42	-0.137	-10.853	1.007	0.125	12.89	36.85	31.55
	8	0.085	5.00	721.7	0.145	-0.013	2.56	2.43	0.000	0.000	2.56	2.41	-0.090	-7.984	0.999	0.145	9.41	40.46	31.42
	9	0.087	10.00	749.4	0.189	0.000	2.63	2.45	0.000	0.000	2.63	2.42	0.000	-0.501	0.980	0.185	10.01	46.19	32.15
	10	0.087	25.00	708.8	0.228	0.009	2.80	2.58	-0.000	-0.000	2.80	2.54	0.039	3.622	0.977	0.223	25.24	45.74	31.60
3	1	0.087	2.00	626.9	0.027	-0.006	2.59	2.58	-0.002	-0.000	2.59	2.58	-0.222	-15.427	1.018	0.027	15.55	16.50	30.48
	2	0.090	-5.00	636	0.031	-0.005	2.67	2.66	-0.001	-0.000	2.67	2.66	-0.161	-12.148	1.011	0.031	13.12	17.88	31.12
	3	0.089	12.00	646	0.050	0.004	2.79	2.75	-0.000	-0.000	2.79	2.74	0.080	8.062	0.981	0.049	14.42	22.35	31.09
	4	0.085	-4.00	654.8	0.059	0.010	2.70	2.65	0.000	0.000	2.70	2.64	0.169	16.572	1.001	0.059	17.03	24.31	30.50
	5	0.090	5.00	660	0.063	0.011	2.66	2.61	0.000	0.000	2.66	2.60	0.175	16.934	1.002	0.063	17.64	25.11	31.46
	6	0.089	5.00	664	0.083	0.005	2.70	2.62	-0.000	-0.000	2.70	2.61	0.060	5.894	0.978	0.081	7.72	29.66	31.34
	7	0.085	8.00	667.2	0.108	-0.001	2.68	2.59	0.000	0.000	2.68	2.57	-0.009	-1.408	0.981	0.106	8.12	33.91	30.68
	8	0.088	10.00	671.7	0.163	0.000	2.68	2.53	0.000	0.000	2.68	2.50	0.000	-0.501	0.980	0.160	10.01	41.49	31.28
	9	0.086	10.00	676.2	0.213	0.009	2.96	2.76	-0.000	-0.000	2.96	2.73	0.042	3.924	0.977	0.208	10.74	47.33	30.97
	10	0.087	28.00	678.5	0.225	0.013	3.04	2.82	-0.000	-0.000	3.04	2.78	0.058	5.623	0.978	0.220	28.51	43.57	31.18
4	1	0.084	10.00	621.7	0.023	0.004	2.61	2.61	0.000	0.000	2.61	2.61	0.174	16.886	1.002	0.023	19.55	14.74	29.87
	2	0.087	10.00	637.3	0.037	0.006	2.70	2.68	0.000	0.000	2.70	2.68	0.162	16.023	0.999	0.037	18.82	18.89	30.62
	3	0.091	8.00	645.9	0.083	0.015	2.72	2.65	0.000	0.000	2.72	2.64	0.181	17.343	1.003	0.083	19.05	28.43	31.44
	4	0.086	6.00	653.7	0.109	0.023	2.93	2.84	0.000	0.000	2.93	2.82	0.211	18.955	1.010	0.110	19.85	32.64	30.66
	5	0.090	-3.00	658.7	0.106	0.031	2.80	2.71	0.000	0.000	2.80	2.69	0.292	19.786	1.015	0.108	20.00	32.30	31.44
	6	0.087	4.00	664.2	0.124	0.023	2.76	2.65	0.000	0.000	2.76	2.63	0.185	17.643	1.005	0.125	18.08	35.25	30.99
	7	0.091	7.00	668.5	0.165	0.024	2.75	2.59	0.000	0.000	2.75	2.56	0.145	14.645	0.995	0.164	16.20	40.96	31.76
	8	0.090	7.00	672.2	0.197	0.034	2.72	2.53	0.000	0.000	2.72	2.50	0.173	16.794	1.001	0.197	18.16	44.51	31.64
	9	0.088	2.00	675.9	0.239	0.032	2.80	2.58	0.000	0.000	2.80	2.54	0.134	13.600	0.992	0.237	13.74	49.96	31.33
	10	0.087	23.00	678.8	0.230	0.012	2.83	2.61	-0.000	-0.000	2.83	2.57	0.052	5.008	0.977	0.225	23.51	45.97	31.19
5	1	0.087	5.00	612.3	0.083	0.007	2.74	2.68	-0.000	-0.000	2.74	2.67	0.084	8.533	0.981	0.081	9.88	28.85	30.27
	2	0.090	2.00	629.4	0.108	0.013	2.69	2.59	0.000	0.000	2.69	2.57	0.120	12.299	0.989	0.107	12.46	33.01	31.03
	3	0.087	0.00	642	0.178	0.034	2.74	2.58	0.000	0.000	2.74	2.55	0.191	17.970	1.006	0.179	17.97	41.88	30.69
	4	0.084	-2.00	651	0.220	0.050	2.70	2.49	0.000	0.000	2.70	2.45	0.227	19.521	1.013	0.223	19.62	46.47	30.28
	5	0.086	5.00	658.9	0.220	0.064	2.81	2.60	0.000	0.000	2.81	2.56	0.291	19.810	1.015	0.223	20.41	46.43	30.74
	6	0.091	3.00	665.4	0.216	0.055	2.77	2.57	0.000	0.000	2.77	2.54	0.255	19.997	1.016	0.219	20.21	46.22	31.72
	7	0.087	10.00	670.4	0.224	0.055	2.81	2.60	0.000	0.000	2.81	2.56	0.246	19.903	1.015	0.227	22.18	46.53	31.08
	8	0.087	15.00	673.8	0.242	0.058	2.92	2.69	0.000	0.000	2.92	2.65	0.240	19.809	1.015	0.246	24.66	47.52	31.12
	9	0.087	10.00	676.7	0.223	0.032	3.04	2.83	0.000	0.000	3.04	2.79	0.143	14.473	0.994	0.222	17.53	47.43	31.16
	10	0.084	8.00	682.8	0.220	0.011	3.02	2.81	-0.000	-0.000	3.02	2.77	0.050	4.769	0.977	0.215	9.31	48.46	30.70
6	1	0.085	-3.00	603.2	0.205	0.011	2.88	2.68	-0.000	-0.000	2.88	2.65	0.054	5.170	0.977	0.200	5.98	45.49	29.79
	2	0.085	-5.00	626.3	0.162	0.017	2.93	2.78	0.000	0.000	2.93	2.75	0.105	10.729	0.985	0.160	11.82	40.38	30.11
	3	0.092	-3.00	645.7	0.279	0.041	2.88	2.62	0.000	0.000	2.88	2.58	0.147	14.775	0.995	0.278	15.07	53.02	31.61
	4	0.085	-5.00	653.4	0.264	0.062	2.85	2.58	0.000	0.000	2.85	2.53	0.218	19.235	1.012	0.287	19.85	52.73	30.49
	5	0.091	0.00	661.7	0.261	0.072	2.78	2.52	0.000	0.000	2.78	2.48	0.276	19.987	1.016	0.265	19.99	50.80	31.67
	6	0.091	3.00	667.9	0.254	0.071	2.86	2.62	0.000	0.000	2.86	2.58	0.280	19.956	1.016	0.258	20.17	50.18	31.75
	7	0.090	0.00	671.4	0.233	0.061	2.87	2.65	-0.000	-0.000	2.87	2.61	0.262	20.029	1.016	0.237	20.03	48.19	31.62
	8	0.086	2.00	677.7	0.212	0.041	2.95	2.75	0.000	0.000	2.95	2.72	0.193	18.103	1.007	0.213	18.21	46.38	30.99
	9	0.086	5.00	679.8	0.212	0.012	2.79	2.58	-0.000	-0.000	2.79	2.54	0.057	5.494	0.978	0.207	7.42	47.77	31.03
	10	0.087		680.2	0.178	0.025	2.77	2.60											

Avg. Duct Static = 2.59

Yaw Avg. =4.58	Average Temp.	Pitch Avg. =3.04	Resul Angle Avg. =17.15	Traverse Avg. Velocity in ft/s	Probes

Std. Dev. = 7.63	656	Std. Dev. = 15.95	Std. Dev. = 6.54	36.49	30.88

IP7_040243

IP7_040244

3D PROBE WORK SHEET

PROJECT:---
Test Run:------
INPUTS

STD. TEMP. DEGREES F (t std)		68				
STD. BAROMETRIC PRESSURE " Hg (Pstd)		29.92				
DUCT SIZE (D)	Traverse	75.000	120.000	75.000	120.000	Flow Element
AVERAGE TEMPERATURE DEGREES F (ts)		695				
AVERAGE PRESSURE IN. W.C. (Pg)		2.16				
ACTUAL BAROMETRIC PRESSURE " Hg (Pbar)		25.50				
% O2 (20.95)		20.95				
% N2 (78.09)		78.09				
% CO2 (0.03)		0.03				
% CO (0.0)		0.00				
%A (0.93)		0.93				
% H2O (0.0)		0.00				

CALCULATIONS

	Traverse	Flow Elem.	% Difference
DRY MOLE FRACTION OF STACK (Mfd) =	1.000	1.000	
STACK PRESSURE " Hg (Ps) =	25.66	25.66	
DRY MOLECULAR WT. OF STACK GAS Lb / Lb -Mole(Md)=	28.966	28.966	
WET MOLECULAR WT. OF STACK GAS Lb / Lb -Mole (Ms)=	28.966	28.966	
STACK AREA SQ. FT (As) =	62.500	62.500	
STACK VELOCITY FT/ SEC. (Vs) =	45.61	41.43	
ACTUAL STACK VOLUME (Q acfm) =	171,022	155,374	-9.15
DRY STANDARD VOLUMETRIC STACK FLOW (Q scfmd) =	67,071	60,934	-9.15
WET STANDARD VOLUMETRIC STACK FLOW (Q scfmw) =	67,071	60,934	-9.15
FLOW IN LBS/HR (wet) =	302350	274685	-9.15
FLOW IN LBS/HR (dry) =	302350	274685	-9.15

GAS DENSITY AT ACTUAL CONDITIONS, LBS/CU.FT.(wet)	0.029465
GAS DENSITY AT STANDARD CONDITIONS, LBS/CU.FT. (wet)	0.075132
GAS DENSITY AT STANDARD CONDITIONS, LBS/CU.FT. (dry)	0.075132

<date>

IP7_040245

Port #	Depth#	Probes Vp In. W.C.	Measured Yaw Angle Degrees	Air Temp. °F	P1 - P23 In.W.C.	Pitch Press. P4 - P5 In.W.C.	P1-Patm (Pt) In. W.C.	P23-Patm Ps Choke In w.c.	From Chart P1-Pt/Pt-Ps TP Coeff.	TP Coeff. * Corrected Pv P1-Pt	(P1-Patm) Minus P1-Pt	P23 Corrected In w.c.	Calculated P4-P5/P1-P23 F1	From Chart Pitch Angle Degrees	From Chart Pt-Ps/P1-P23 (F2)^2	Corrected Pv Pt-Ps In.W.C.	Resultant Angle Degrees	Traverse Point Velocity	Probes Point Velocity
1	1	0.147	-12.00	636.8	0.018	0.000	2.09	2.09	0.000	0.000	2.09	2.09	0.000	-0.501	0.980	0.018	12.01	13.49	39.82
	2	0.141	5.00	645.5	0.041	0.012	2.14	2.12	0.000	0.000	2.14	2.12	0.293	19.782	1.015	0.042	20.38	19.94	39.15
	3	0.147	8.00	653	0.106	-0.078	1.98	1.88	0.000	0.000	1.98	1.86	-0.736	-4.670	0.989	0.105	9.26	33.45	40.13
	4	0.148	5.00	819.3	0.133	-0.023	2.10	1.98	-0.001	-0.000	2.10	1.96	-0.173	-12.757	1.012	0.135	13.69	40.00	43.16
	5	0.149	2.00	805.3	0.136	-0.026	2.25	2.12	-0.001	-0.000	2.25	2.10	-0.191	-13.714	1.014	0.138	13.86	40.23	43.06
	6	0.149	0.00	795.3	0.172	0.021	2.19	2.02	0.000	0.000	2.19	1.99	0.122	12.469	0.989	0.170	12.47	44.76	42.90
	7	0.150	0.00	778	0.179	0.050	2.11	1.95	0.000	0.000	2.11	1.92	0.279	19.958	1.016	0.182	19.96	44.24	42.75
	8	0.149	10.00	678.6	0.199	0.082	2.07	1.87	0.000	0.000	2.07	1.84	0.412	18.639	1.009	0.201	21.07	44.26	40.86
	9	0.145	18.00	689.7	0.237	0.090	2.21	1.98	0.000	0.000	2.21	1.94	0.380	18.063	1.006	0.239	25.29	46.97	40.50
	10	0.149	5.00	775.8	0.270	0.114	2.40	2.14	0.000	0.000	2.40	2.10	0.422	19.155	1.011	0.273	19.77	54.22	42.56
2	1	0.144	-5.00	606.6	0.033	0.009	2.08	2.06	-0.000	-0.000	2.08	2.06	0.273	20.008	1.016	0.034	20.60	17.56	38.87
	2	0.153	-8.00	626.1	0.059	0.017	2.20	2.16	0.000	0.000	2.20	2.15	0.288	19.852	1.015	0.060	21.34	23.56	40.42
	3	0.149	-2.00	637.5	0.072	0.025	2.29	2.23	0.000	0.000	2.29	2.22	0.347	18.521	1.009	0.073	18.62	26.52	40.10
	4	0.150	8.00	645.8	0.099	0.027	2.44	2.35	-0.000	-0.000	2.44	2.33	0.273	20.008	1.016	0.101	21.49	30.77	40.38
	5	0.150	-6.00	651.8	0.094	0.000	2.14	2.07	0.000	0.000	2.14	2.06	0.000	-0.501	0.980	0.092	6.02	31.56	40.50
	6	0.154	0.00	659.7	0.130	0.000	2.14	2.03	0.000	0.000	2.14	2.01	0.000	-0.501	0.980	0.127	6.60	37.45	41.19
	7	0.154	7.00	664.5	0.156	0.000	2.21	2.07	0.000	0.000	2.21	2.05	0.000	-0.501	0.980	0.153	7.02	40.81	41.27
	8	0.149	5.00	669.4	0.193	0.050	2.26	2.09	-0.000	-0.000	2.26	2.06	0.259	20.021	1.016	0.196	20.61	43.69	40.68
	9	0.151	10.00	672.5	0.273	0.136	2.37	2.11	0.000	0.000	2.37	2.07	0.498	31.113	1.194	0.326	32.53	50.81	41.01
	10	0.150	25.00	675.4	0.344	0.095	2.67	2.34	0.000	0.000	2.67	2.28	0.276	19.985	1.016	0.349	31.60	53.19	40.92
3	1	0.146	2.00	606.6	0.025	0.000	2.09	2.09	0.000	0.000	2.09	2.09	0.000	-0.501	0.980	0.024	2.06	16.02	39.14
	2	0.145	-5.00	683.6	0.044	0.000	2.19	2.17	0.000	0.000	2.19	2.17	0.000	-0.501	0.980	0.043	5.02	21.93	40.38
	3	0.146	12.00	740.7	0.079	0.000	2.33	2.28	0.000	0.000	2.33	2.27	0.000	-0.501	0.980	0.077	12.01	29.56	41.51
	4	0.146	-4.00	761.9	0.100	0.003	2.12	2.04	-0.000	-0.000	2.12	2.03	0.030	2.602	0.977	0.098	4.77	34.15	41.89
	5	0.149	5.00	772.2	0.102	0.000	2.10	2.02	0.000	0.000	2.10	2.01	0.000	-0.501	0.980	0.100	5.02	34.67	42.50
	6	0.148	5.00	771.2	0.121	0.095	2.11	2.01	0.001	0.000	2.11	1.99	0.785	37.058	1.377	0.167	37.35	35.71	42.34
	7	0.149	8.00	774.6	0.147	0.000	2.20	2.08	0.000	0.000	2.20	2.06	0.000	-0.501	0.980	0.144	8.02	41.41	42.54
	8	0.144	10.00	774	0.217	0.045	2.36	2.17	0.000	0.000	2.36	2.14	0.207	18.799	1.010	0.219	21.21	48.07	41.80
	9	0.145	10.00	792	0.296	0.050	2.48	2.22	0.000	0.000	2.48	2.18	0.169	16.531	1.001	0.296	19.25	57.01	42.25
	10	0.147	28.00	783.3	0.351	0.131	2.41	2.09	0.000	0.000	2.41	2.03	0.373	18.096	1.007	0.353	32.94	55.17	42.40
4	1	0.152	10.00	589.4	0.043	0.000	2.28	2.28	0.000	0.000	2.28	2.28	0.000	-0.501	0.980	0.042	10.01	20.47	39.48
	2	0.150	10.00	602.1	0.089	0.000	2.17	2.13	0.000	0.000	2.17	2.12	0.000	-0.501	0.980	0.087	10.01	29.72	39.58
	3	0.154	8.00	718.2	0.150	0.000	2.18	2.07	0.000	0.000	2.18	2.05	0.000	-0.501	0.980	0.147	8.02	40.87	42.25
	4	0.149	6.00	633.6	0.206	0.000	2.15	1.99	0.000	0.000	2.15	1.96	0.000	-0.501	0.980	0.202	6.02	46.34	40.04
	5	0.157	-3.00	722.7	0.188	0.000	2.21	2.06	0.000	0.000	2.21	2.03	0.000	-0.501	0.980	0.184	3.04	46.23	42.74
	6	0.153	4.00	761.6	0.199	0.000	2.25	2.10	0.000	0.000	2.25	2.07	0.000	-0.501	0.980	0.195	4.03	48.28	42.88
	7	0.152	7.00	662.7	0.227	0.062	2.48	2.29	-0.000	-0.000	2.48	2.26	0.273	20.005	1.016	0.231	21.15	47.06	40.96
	8	0.153	7.00	666.7	0.301	0.079	2.59	2.33	0.000	0.000	2.59	2.29	0.262	20.030	1.016	0.306	21.17	54.27	41.16
	9	0.151	2.00	673.3	0.364	0.157	2.46	2.14	0.000	0.000	2.46	2.08	0.431	19.790	1.015	0.369	19.89	60.34	41.03
	10	0.156	23.00	675.7	0.347	0.068	2.58	2.28	0.000	0.000	2.58	2.23	0.196	18.243	1.007	0.349	29.04	54.61	41.74
5	1	0.158	5.00	609.7	0.156	-0.020	2.55	2.44	-0.000	-0.000	2.55	2.42	-0.128	-10.356	1.006	0.157	11.49	39.80	40.75
	2	0.151	2.00	635.4	0.197	0.009	2.52	2.37	-0.000	-0.000	2.52	2.34	0.046	4.298	0.977	0.192	4.74	45.36	40.32
	3	0.160	0.00	646	0.341	0.042	2.60	2.30	0.000	0.000	2.60	2.25	0.123	12.575	0.990	0.337	12.57	59.12	41.71
	4	0.155	-2.00	658.7	0.387	0.105	2.59	2.25	-0.000	-0.000	2.59	2.19	0.271	20.015	1.016	0.393	20.11	61.76	41.29
	5	0.156	5.00	692.2	0.368	0.088	2.62	2.29	0.000	0.000	2.62	2.23	0.239	19.799	1.015	0.373	20.40	60.96	42.04
	6	0.153	3.00	778.1	0.372	0.107	2.64	2.30	0.000	0.000	2.64	2.24	0.288	19.859	1.015	0.378	20.08	63.68	43.15
	7	0.153	10.00	773.3	0.382	0.070	2.80	2.46	0.000	0.000	2.80	2.40	0.183	17.504	1.004	0.384	20.08	64.04	43.06
	8	0.155	15.00	767.2	0.387	0.108	2.76	2.41	0.000	0.000	2.76	2.35	0.279	19.960	1.016	0.393	24.78	62.51	43.24
	9	0.157	10.00	721.5	0.383	0.131	2.63	2.29	0.000	0.000	2.63	2.23	0.342	18.642	1.009	0.386	21.07	62.52	42.70
	10	0.157	8.00	732.2	0.349	0.050	2.71	2.40	0.000	0.000	2.71	2.35	0.143	14.452	0.994	0.347	16.48	61.14	42.89
6	1	0.154	-3.00	652.4	0.343	-0.053	2.76	2.46	-0.001	-0.000	2.76	2.41	-0.155	-11.792	1.010	0.346	12.16	60.15	41.03
	2	0.152	-5.00	660.8	0.331	0.000	2.68	2.40	0.000	0.000	2.68	2.35	0.000	-0.501	0.980	0.324	5.02	59.54	40.92
	3	0.157	-3.00	686.3	0.443	-0.030	2.84	2.44	0.000	0.000	2.84	2.37	-0.068	-6.428	0.994	0.440	7.09	69.90	42.06
	4	0.158	-5.00	657.3	0.438	0.075	2.78	2.38	0.000	0.000	2.78	2.31	0.171	16.697	1.001	0.439	17.41	66.22	41.66
	5	0.158	0.00	677.7	0.351	0.136	2.64	2.33	0.000	0.000	2.64	2.28	0.387	18.079	1.006	0.353	18.08	59.75	42.04
	6	0.159	3.00	668.4	0.390	0.099	2.72	2.37	0.000	0.000	2.72	2.31	0.254	19.992	1.016	0.396	20.21	62.21	41.99
	7	0.158	0.00	675	0.353	0.083	2.76	2.44	0.000	0.000	2.76	2.38	0.235	19.718	1.014	0.358	19.72	59.49	41.98
	8	0.155	2.00	680.4	0.302	0.118	2.64	2.38	0.000	0.000	2.64	2.34	0.391	18.106	1.007	0.304	18.21	55.45	41.68
	9	0.152	5.00	677.9	0.329	0.059	2.67	2.38	0.000	0.000	2.67	2.33	0.179	17.253	1.003	0.330	17.94	57.80	41.23
	10	0.152		678.9	0.313	0.040	2.56	2.29											

Avg. Duct Static = 2.16

Yaw Avg. = 4.58 | Average Temp.

Pitch Avg. = 10.47 | Resul Angle Avg. = 15.86 | Traverse Avg. Velocity in ft/s | Probes

Std. Dev. = 7.63	695	Std. Dev. = 11.74	Std. Dev. = 8.39	45.61	41.43

IP7_040246

AIR MONITOR CORPORATION

K-FACTOR FLOW WORKSHEET

PROJECT: **InterMountatin Power OFA**
WORK ORDER: **50600** *REV:*
TAG(S): **U2 SE**

Station: VOLU-probe/SS w/Temp Probe
Transmitter Model: CAMM
Traverse Probe Type: C-4526 14'
Test Technician: Dan Beistel

Given:

Point #	*% Flow*	*Measured*	*Reference*
Low	50	140,854	196,333
Mid	71	239,979	264,502
*High**	100	297,671	312,051

Transmitter Full Scale (Calibrated): 387,000
Units of Meas.: lbs.hr.
*3-pt. K-Factors only. (Not used in 2-pt. Ks)

K-FACTOR - **3 POINTS** - BEST FIT WHERE ERRORS ARE EQUAL IN % OF READING **WITH BIAS**
(K-Factor Gain and Bias applied prior to square root)

Point	*Measured*	*Reference*	*Eng. Units*	*% Error*	*Correceted Flow*	*Eng. Units*	*% Error*
Low	140,854	196,333	lbs.hr.	-28.26	195,719	lbs.hr.	-0.31
Mid	239,979	264,502	lbs.hr.	-9.27	265,327	lbs.hr.	0.31
High	297,671	312,051	lbs.hr.	-4.61	311,075	lbs.hr.	-0.31

Uncorrected Full Scale = 387,000 lbs.hr. Gain = 0.850
Corrected Full Scale (using original max DP) = 385,697 lbs.hr. % Bias = 14.31

K-FACTOR - **3 POINTS** - BEST FIT WHERE ERRORS ARE EQUAL IN % OF READING AND **BIAS = 0**
(K-Factor Gain applied prior to square root)

				(Gain 1) 1.515		*(Gain 2)* 1.155		*(Gain 3)* 1.432	
Point	*Measured*	*Reference*	*% Error*	*M1*	*% Error*	*M2*	*% Error*	*M3*	*% Error*
Low	140,854	196,333	-28.3	173,390	-11.7	151,358	-22.9	168,552	-14.1
Mid	239,979	264,502	-9.3	295,411	11.7	257,875	-2.5	287,169	8.6
High	297,671	312,051	-4.6	366,430	17.4	319,869	2.5	356,206	14.1

K-FACTOR - **2 POINTS** - BEST FIT WHERE ERRORS ARE EQUAL IN % OF READING **WITH BIAS**
(K-Factor Gain applied prior to square root)

Point #	*Measured*	*Reference*	*Eng. Units*	*% Error*	*Corrected Flow*	*Eng.Units*	*% Error*
1	140,854	196,333	lbs.hr.	-28.26	196,333	lbs.hr.	0.00
2	239,979	264,502	lbs.hr.	-9.27	264,501	lbs.hr.	-0.00

Uncorrected Full Scale = 387,000 lbs.hr. Gain = 0.832
Corrected Full Scale (using original max DP) = 382,975 lbs.hr. % Bias = 14.71

K-FACTOR - **2 POINTS** - BEST FIT WHERE ERRORS ARE EQUAL IN % OF READING AND **BIAS = 0**
(K-Factor Gain applied prior to square root)

Point #	*Measured*	*Reference*	*Eng. Units*	*% Error*	*Corrected Flow*	*Eng.Units*	*% Error*
1	140,854	196,333	lbs.hr.	-28.26	173,390	lbs.hr.	-11.69
2	239,979	264,502	lbs.hr.	-9.27	295,411	lbs.hr.	11.69

Uncorrected Full Scale = 387,000 lbs.hr. Gain = 1.515
Corrected Full Scale (using original max DP) = 476,392 lbs.hr.

Copyright 2003
Air Monitor Corporation

AIR MONITOR CORPORATION

K-FACTOR FLOW WORKSHEET

PROJECT: **InterMountatin Power OFA**
WORK ORDER: **50600** *REV:*
TAG(S): **U2 NE**

Station: VOLU-probe/SS w/Temp Probe
Transmitter Model: CAMM
Traverse Probe Type: C-4526 14'
Test Technician: Dan Beistel

Given:

Point #	*% Flow*	*Measured*	*Reference*
Low	50	154,621	188,634
Mid	71	233,740	253,399
*High**	100	270,385	280,225

Transmitter Full Scale (Calibrated): 387,000
Units of Meas.: lbs.hr.
*3-pt. K-Factors only. (Not used in 2-pt. Ks)

K-FACTOR - **3 POINTS** - BEST FIT WHERE ERRORS ARE EQUAL IN % OF READING **WITH BIAS**
(K-Factor Gain and Bias applied prior to square root)

Point	*Measured*	*Reference*	*Eng. Units*	*% Error*	*Correceted Flow*	*Eng. Units*	*% Error*
Low	154,621	188,634	lbs.hr.	-18.03	189,976	lbs.hr.	0.71
Mid	233,740	253,399	lbs.hr.	-7.76	251,582	lbs.hr.	-0.72
High	270,385	280,225	lbs.hr.	-3.51	282,220	lbs.hr.	0.71

Uncorrected Full Scale = 387,000 lbs.hr. Gain = 0.885
Corrected Full Scale (using original max DP) = 384,079 lbs.hr. % Bias = 9.97

K-FACTOR - **3 POINTS** - BEST FIT WHERE ERRORS ARE EQUAL IN % OF READING AND **BIAS = 0**
(K-Factor Gain applied prior to square root)

				(Gain 1) 1.318		*(Gain 2)* 1.123		*(Gain 3)* 1.256	
Point	*Measured*	*Reference*	*% Error*	*M1*	*% Error*	*M2*	*% Error*	*M3*	*% Error*
Low	154,621	188,634	-18.0	177,510	-5.9	163,855	-13.1	173,287	-8.1
Mid	233,740	253,399	-7.8	268,341	5.9	247,697	-2.2	261,956	3.4
High	270,385	280,225	-3.5	310,410	10.8	286,530	2.2	303,024	8.1

K-FACTOR - **2 POINTS** - BEST FIT WHERE ERRORS ARE EQUAL IN % OF READING **WITH BIAS**
(K-Factor Gain applied prior to square root)

Point #	*Measured*	*Reference*	*Eng. Units*	*% Error*	*Corrected Flow*	*Eng.Units*	*% Error*
1	154,621	188,634	lbs.hr.	-18.03	188,634	lbs.hr.	-0.00
2	233,740	253,399	lbs.hr.	-7.76	253,399	lbs.hr.	-0.00

Uncorrected Full Scale = 387,000 lbs.hr. Gain = 0.932
Corrected Full Scale (using original max DP) = 390,959 lbs.hr. % Bias = 8.89

K-FACTOR - **2 POINTS** - BEST FIT WHERE ERRORS ARE EQUAL IN % OF READING AND **BIAS = 0**
(K-Factor Gain applied prior to square root)

Point #	*Measured*	*Reference*	*Eng. Units*	*% Error*	*Corrected Flow*	*Eng.Units*	*% Error*
1	154,621	188,634	lbs.hr.	-18.03	177,510	lbs.hr.	-5.90
2	233,740	253,399	lbs.hr.	-7.76	268,341	lbs.hr.	5.90

Uncorrected Full Scale = 387,000 lbs.hr. Gain = 1.318
Corrected Full Scale (using original max DP) = 444,289 lbs.hr.

Copyright 2003
Air Monitor Corporation

AIR MONITOR CORPORATION

K-FACTOR FLOW WORKSHEET

PROJECT: **InterMountatin Power OFA**
WORK ORDER: **50600** *REV:*
TAG(S): **U2 NW**

Station: VOLU-probe/SS w/Temp Probe
Transmitter Model: CAMM
Traverse Probe Type: C-4526 14'
Test Technician: Dan Beistel

Given:

Point #	*% Flow*	*Measured*	*Reference*
Low	50	142,044	172,207
Mid	71	211,475	223,611
*High**	100	245,158	249,820

Transmitter Full Scale (Calibrated): 387,000
Units of Meas.: lbs.hr.
*3-pt. K-Factors only. (Not used in 2-pt. Ks)

K-FACTOR - **3 POINTS** - BEST FIT WHERE ERRORS ARE EQUAL IN % OF READING **WITH BIAS**
(K-Factor Gain and Bias applied prior to square root)

Point	*Measured*	*Reference*	*Eng. Units*	*% Error*	*Correceted Flow*	*Eng. Units*	*% Error*
Low	142,044	172,207	lbs.hr.	-17.52	172,388	lbs.hr.	0.11
Mid	211,475	223,611	lbs.hr.	-5.43	223,375	lbs.hr.	-0.11
High	245,158	249,820	lbs.hr.	-1.87	250,082	lbs.hr.	0.11

Uncorrected Full Scale = 387,000 lbs.hr. Gain = 0.822
Corrected Full Scale (using original max DP) = 369,130 lbs.hr. % Bias = 8.77

K-FACTOR - **3 POINTS** - BEST FIT WHERE ERRORS ARE EQUAL IN % OF READING AND **BIAS = 0**
(K-Factor Gain applied prior to square root)

Point	*Measured*	*Reference*	*% Error*	*(Gain 1)* 1.276 *M1*	*% Error*	*(Gain 2)* 1.077 *M2*	*% Error*	*(Gain 3)* 1.226 *M3*	*% Error*
Low	142,044	172,207	-17.5	160,450	-6.8	147,420	-14.4	157,286	-8.7
Mid	211,475	223,611	-5.4	238,877	6.8	219,478	-1.8	234,167	4.7
High	245,158	249,820	-1.9	276,925	10.8	254,436	1.8	271,465	8.7

K-FACTOR - **2 POINTS** - BEST FIT WHERE ERRORS ARE EQUAL IN % OF READING **WITH BIAS**
(K-Factor Gain applied prior to square root)

Point #	*Measured*	*Reference*	*Eng. Units*	*% Error*	*Corrected Flow*	*Eng. Units*	*% Error*
1	142,044	172,207	lbs.hr.	-17.52	172,207	lbs.hr.	0.00
2	211,475	223,611	lbs.hr.	-5.43	223,610	lbs.hr.	-0.00

Uncorrected Full Scale = 387,000 lbs.hr. Gain = 0.829
Corrected Full Scale (using original max DP) = 370,242 lbs.hr. % Bias = 8.63

K-FACTOR - **2 POINTS** - BEST FIT WHERE ERRORS ARE EQUAL IN % OF READING AND **BIAS = 0**
(K-Factor Gain applied prior to square root)

Point #	*Measured*	*Reference*	*Eng. Units*	*% Error*	*Corrected Flow*	*Eng. Units*	*% Error*
1	142,044	172,207	lbs.hr.	-17.52	160,450	lbs.hr.	-6.83
2	211,475	223,611	lbs.hr.	-5.43	238,877	lbs.hr.	6.83

Uncorrected Full Scale = 387,000 lbs.hr. Gain = 1.276
Corrected Full Scale (using original max DP) = 437,146 lbs.hr.

Copyright 2003
Air Monitor Corporation

AIR MONITOR CORPORATION

K-FACTOR FLOW WORKSHEET

PROJECT: **InterMountatin Power OFA**
WORK ORDER: **50600** *REV:*
TAG(S): **U2 SW**

Station: VOLU-probe/SS w/Temp Probe
Transmitter Model: CAMM
Traverse Probe Type: C-4526 14'
Test Technician: Dan Beistel

Given:

Point #	*% Flow*	*Measured*	*Reference*
Low	50	125,022	186,222
Mid	71	212,016	250,536
*High**	100	274,685	302,350

Transmitter Full Scale (Calibrated): 387,000
Units of Meas.: lbs.hr.
*3-pt. K-Factors only. (Not used in 2-pt. Ks)

K-FACTOR - **3 POINTS** - BEST FIT WHERE ERRORS ARE EQUAL IN % OF READING **WITH BIAS**
(K-Factor Gain and Bias applied prior to square root)

Point	*Measured*	*Reference*	*Eng. Units*	*% Error*	*Correceted Flow*	*Eng. Units*	*% Error*
Low	125,022	186,222	lbs.hr.	-32.86	186,431	lbs.hr.	0.11
Mid	212,016	250,536	lbs.hr.	-15.38	250,255	lbs.hr.	-0.11
High	274,685	302,350	lbs.hr.	-9.15	302,690	lbs.hr.	0.11

Uncorrected Full Scale = 387,000 lbs.hr. Gain = 0.951
Corrected Full Scale (using original max DP) = 402,821 lbs.hr. % Bias = 13.29

K-FACTOR - **3 POINTS** - BEST FIT WHERE ERRORS ARE EQUAL IN % OF READING AND **BIAS = 0**
(K-Factor Gain applied prior to square root)

				(Gain 1) 1.737		*(Gain 2)* 1.299		*(Gain 3)* 1.603	
Point	*Measured*	*Reference*	*% Error*	*M1*	*% Error*	*M2*	*% Error*	*M3*	*% Error*
Low	125,022	186,222	-32.9	164,762	-11.5	142,496	-23.5	158,270	-15.0
Mid	212,016	250,536	-15.4	279,408	11.5	241,648	-3.5	268,398	7.1
High	274,685	302,350	-9.2	361,997	19.7	313,076	3.5	347,733	15.0

K-FACTOR - **2 POINTS** - BEST FIT WHERE ERRORS ARE EQUAL IN % OF READING **WITH BIAS**
(K-Factor Gain applied prior to square root)

Point #	*Measured*	*Reference*	*Eng. Units*	*% Error*	*Corrected Flow*	*Eng. Units*	*% Error*
1	125,022	186,222	lbs.hr.	-32.86	186,222	lbs.hr.	-0.00
2	212,016	250,536	lbs.hr.	-15.38	250,537	lbs.hr.	0.00

Uncorrected Full Scale = 387,000 lbs.hr. Gain = 0.958
Corrected Full Scale (using original max DP) = 403,966 lbs.hr. % Bias = 13.16

K-FACTOR - **2 POINTS** - BEST FIT WHERE ERRORS ARE EQUAL IN % OF READING AND **BIAS = 0**
(K-Factor Gain applied prior to square root)

Point #	*Measured*	*Reference*	*Eng. Units*	*% Error*	*Corrected Flow*	*Eng. Units*	*% Error*
1	125,022	186,222	lbs.hr.	-32.86	164,762	lbs.hr.	-11.52
2	212,016	250,536	lbs.hr.	-15.38	279,407	lbs.hr.	11.52

Uncorrected Full Scale = 387,000 lbs.hr. Gain = 1.737
Corrected Full Scale (using original max DP) = 510,011 lbs.hr.

Copyright 2003
Air Monitor Corporation

IP7_040251

From: <fpalacios@bbpwr.com>
To: <KENNETH-N@ipsc.com>
CC: <csimmons@bbpwr.com>, <ddorman@bbpwr.com>
Date: 3/26/2003 12:18 PM
Subject: Intermountain Power (100210)
Attachments: OFA Control Description Rev2.doc; OFA set point curve.ppt

Ken: I am forwarding the e-mail I got from Darrell with the setpoint curve to be implemented in your control system. Please notice that it is based on total OFA flow to total combustion airflow (including PA flow). Also, please make sure that this curve is only preliminary and it should be relatively easy to change if required after the commissioning tests are done.

I am also attaching a revised description in which we only changed the reference to secondary airflow to total combustion airflow.

(See attached file: OFA Control Description Rev2.doc)
----- Forwarded by Francisco Palacios/Riley/US on 03/25/2003 04:00 PM -----

Darrell Dorman
03/25/2003 03:56 PM

To: Francisco Palacios/Riley/US@Riley
cc: Chris Simmons/Riley/US@Riley, Craig Penterson/Riley/US@Riley
Subject: Intermountain Power (100210)
OFA Set Point Curve

Here is the curve depicting preliminary OFA/TCA ratio vs. boiler load & MWe for the range of excess air as specified in the contract.
(See attached file: OFA set point curve.ppt)

****
This email and any files transmitted with it are confidential and intended solely for the use of the individual or entity to whom they are addressed. If you have received this email in error please notify the system manager. This footnote also confirms that this email message has been scanned for the presence of computer viruses.
****

IP7_040252

From: <fpalacios@bbpwr.com>
To: <KENNETH-N@ipsc.com>
CC: <ddorman@bbpwr.com>, <csimmons@bbpwr.com>
Date: 3/19/2003 2:29 PM
Subject: Intermountain Power (100210)
Attachments: 100210-7-4949-103-02.tif; 100210-7-4949-102-01.tiff; 100210-7-4949-101-01.tiff

Ken: Attached are the Air Monitor drawings. Revision 2 of 103-02 shows the traverse port location and dimensions.
----- Forwarded by Francisco Palacios/Riley/US on 03/19/2003 02:29 PM -----

Darrell Dorman
03/10/2003 04:24 PM

To: ssteede@teiservices.com
cc: John Persson/Riley/US@Riley, Chris Simmons/Riley/US@Riley, Francisco Palacios/Riley/US@Riley
Subject: Intermountain Power (100210)
OFA Flow Measurement Probes

Attached for your reference are the drawings providing the installation details for the OFA flow probes installed in the four (4) feeder ducts and sixteen (16) OFA ports.

(See attached file: 100210-7-4949-103-02.tif)(See attached file: 100210-7-4949-102-01.tiff)(See attached file: 100210-7-4949-101-01.tiff)

****
This email and any files transmitted with it are confidential and intended solely for the use of the individual or entity to whom they are addressed. If you have received this email in error please notify the system manager. This footnote also confirms that this email message has been scanned for the presence of computer viruses.
****

IP7_040253

From: Aaron Nissen
To: Ken Nielson
Date: 3/27/2003 6:33 AM
Subject: Re: OFA Controls testing (Revised)

thanks

>>> Ken Nielson 03/26/03 07:03PM >>>
Aaron,
Attached is the revised controls testing plan. Please review and add any additional requirements or criteria necessary.

Let me know if there are problems or questions.
Thanks,
Ken N.