Item	Description	Project ID	Elev./Column&Row /Routine	Model, Size, or Diameter	ucm-row-col-pt
1.	Spare	~~1-SGB-JBX-0020~~			
2.	Spare	~~1-SGB-JBX-0021~~			
3.	SW OFA Header Inlet Dmpr Drive	1SGB-CDR-0169	4803'	Jordan 5220	
4.	SE OFA Header Inlet Dmpr Drive	1SGB-CDR-0170		Jordan 5220	
5.	NW OFA Header Inlet Dmpr Drive	1SGB-CDR-0171		Jordan 5220	
6.	NE OFA Header Inlet Dmpr Drive	1SGB-CDR-0172		Jordan 5220	
7.	SW OFA 2/3 Dmpr Drive	1SGB-CDR-0173		Jordan 5220	
8.	SE OFA 2/3 Dmpr Drive	1SGB-CDR-0174		Jordan 5220	
9.	NW OFA 2/3 Dmpr Drive	1SGB-CDR-0175		Jordan 5220	
10.	NE OFA 2/3 Dmpr Drive	1SGB-CDR-0176		Jordan 5220	
11.	SW OFA 1/3 Dmpr Drive	1SGB-CDR-0177		Jordan 5120	
12.	SE OFA 1/3 Dmpr Drive	1SGB-CDR-0178		Jordan 5120	
13.	NW OFA 1/3 Dmpr Drive	1SGB-CDR-0179		Jordan 5120	
14.	NE OFA 1/3 Dmpr Drive	1SGB-CDR-0180		Jordan 5120	
15.	SW OFA Header Inlet Flow Transmitter	1SGB-FT-0155		Internal to CAMS	
16.	SE OFA Header Inlet Flow Transmitter	1SGB-FT-0156		Internal to CAMS	
17.	NW OFA Header Inlet Flow Transmitter	1SGB-FT-0157		Internal to CAMS	
18.	NE OFA Header Inlet Flow Transmitter	1SGB-FT-0158		Internal to CAMS	
19.	OFA S Common Inst CAB	1SGB-CAB-0009		31"x24"x72"	
20.	OFA N Common Inst CAB	1SGB-CAB-0010		31"x24"x72"	
21.	OFA Hdr SW Inlet Flow CAMS CAB	1SGB-CAB-0011		Air Monitor CAMS	
22.	OFA Hdr SE Inlet Flow CAMS CAB	1SGB-CAB-0012		Air Monitor CAMS	
23.	OFA Hdr NW Inlet Flow CAMS CAB	1SGB-CAB-0013		Air Monitor CAMS	
24.	OFA Hdr NE Inlet Flow CAMS CAB	1SGB-CAB-0014		Air Monitor CAMS	
25.	OFA SW Inlet Flow TT	1SGB-TT-109		Internal to CAMS	
26.	OFA SW Inlet Flow TT	1SGB-TT-110		Internal to CAMS	
27.	OFA SW Inlet Flow TT	1SGB-TT-111		Internal to CAMS	
28.	OFA SW Inlet Flow TT	1SGB-TT-112		Internal to CAMS	
29.	OFA SW Inlet Flow TE	1SGB-TE-1679			
30.	OFA SW Inlet Flow TE	1SGB-TE-1680			
31.	OFA SW Inlet Flow TE	1SGB-TT-1681			
32.	OFA SW Inlet Flow TE	1SGB-TE-1682			

OVERFIRE AIR (OFA) PROJECT - IGS02-14

Electrical cable and conduit Installation - Scope of Work

1. Install instrument cable Control level through wiring gallery up to common cabinets on 9th Level including installation of necessary conduit runs.
   a. Route 1 to 9th Level south side center.
   b. Route 2 to 9th Level north side center.

2. Install power cable for drive amplifiers from power panels on 8th level to common cabinets on 9th level including installation of necessary conduit runs not already installed.
   a. Route 4 to 9th level south side center.
   b. Route 3 to 9th level north side center.

3. Install power and instrument cable from for drives from common cabinet to drives including installation of necessary conduit runs not already installed.
   a. From south side common cabinet:
      i. Routes 13, 14, 17, 18, 21, and 22 on south side.
      ii. Routes 15, 16, 19, 20, 23, and 24 on north side.

4. Install instrument cable from common cabinets to flow transmitter enclosures including installation of necessary conduit runs not already installed.
   a. Routes 9 and 10 on south side.
   b. Routes 11 and 12 on north side.

5. Install power cable from power panels directly to flow transmitter enclosures including installation of necessary conduit runs not already installed.
   a. Routes 5 and 6 from power panel 1APA-PPL-008 to SW and NW flow transmitter enclosures.
   b. Routes 7 and 8 from power panel 1APA-PPL-009 to SE and NE flow transmitter enclosures.

6. Install thermocouple conduit and cables from flow transmitter enclosures to thermocouples mounted on OFA ducts.
   a. Routes 25 and 26 on south side.
   b. Routes 27 and 28 on north side.

ADDENDUM - OVERFIRE AIR (OFA) PROJECT - IGS02-14

Electrical cable and conduit Installation - Addendum to Scope of Work

I. Install instrument cable (single pairs, twisted/shielded) between Coordinated Control System (CCS) cabinets through the wiring gallery.
   A. Cabinet 1COA-CAB-0003 (A3-Section A9) through wiring gallery up into cabinets 1COA-CAB-A3 (UCM7), 1COA-CAB-A1 (UCM8), 1COA-CAB-A4 (UCM10), and 1COA-CAB-A2 (UCM11) on the Control Level.

   B. Reference drawings 1COA-K2805A, 1COA-K2806B, 1COA-K2807A, 1COA-K2808A, and 1COA-K2810 to terminal block lay out.

   C. Reference drawing 1EEC-E3515 for locations.

II. Install purge air tubing for Overfire Air Flow monitoring systems.
   A. AIR Monitor CAMS cabinets to be mounted by TEI near OFA Header Inlet Dampers.

   B. Purge Air Tubing to be installed by GSL.
      1. See attachments on CAMS for installation information.
      2. Will require coordination with IPSC for isolation of required portions of plant air system.

Required Practices and Standards

All work shall be completed in accordance with applicable NEC, NFPA, and NEMA standards. Additional requirements and information are listed below:

- Cable and Tray Identifiers:
  - See drawing 1UUU-K2000B for drawing and wiring identification codes and standards
  - Cable Pans, Trays, Wireways, and Conduit are identified as follows:
    Gallery Cable Pans = uWPC#### : u=unit number, WPC=wiring pan, ####=pan id#
    Cable Trays = uTLa#####: u=unit number, T=tray, L=600V (or less), z####=tray id#
    Wireway = uWLz####: u=unit number, W=wireway, L=600V (or less), z####=wireway id#
    Conduit = uRLz####: u=unit number, R=conduit, L=600V (or less), z####=conduit id#

- Wiring Installation:
  Wiring shall be completed in accordance with the specifications and standards identified in Attachment 3D. For general information the following notes are highlighted:
  - Conductor connectors (section 3D.3.2, p.3D-2):
    - Conductors landed on States Terminal Blocks or other similar type terminal blocks shall be fitted with a ring-lug connector compression fitted on the end of the conductor.
    - Alternatives required for conductors to be landed in a compression type terminal block or other receiver may be used as approved by IPSC.

  - Cable Identification (section 3D.3.8, p. 3D-4):
    - All cables shall be tagged or labeled with the cable identification number as determined on drawings provided.
    - Tags or label shall be attached to the cable within the termination cabinet.
    - Markers for wire and cable circuits shall be of an opaque nylon material 2-1/2" x 3/4" printed or marked with the cable number using a permanent black ink. See section 3D.3.8 for specific requirements.

  - Internal Cabinet Wiring (section 3D.3.8, p3D-4):
    - For wiring installed internal to a cabinet (wiring to and from components entirely within a cabinet), a conductor identification sleeve shall be provided and fastened to each end of each internal conductor.
    - Each sleeve shall be marked with the opposite end destination identification.
    - Conductor identification sleeve shall be of a length of ½ inch or greater and shall be Bradysleeve as manufactured by the W.H. Brady Company or acceptable equal. They shall be permanent and shall be imprinted with a permanent black ink. After inscription, the marking sleeve shall be coated to prevent smudging. Simple adhesive labels are not acceptable.

Conduit, Junction Boxes, and Raceways Installation

Conduit, junction boxes, and raceways shall be installed per the specifications outlined in attachments 3B & 3C.

- Conduit, couplings, and elbows shall be rigid galvanized steel in accordance section 3C.4.1.2.
- Final connections to drives shall be made with "Seal-Tite" flexible conduit or other equivalent as approved by IPSC.
- Conduit, support hangers, and fasteners shall be run and affixed so as to impose the minimal interference into the work and equipment access areas. See page 3C-10 for support and clearance details. Existing conduit, raceways, and trays shall be used wherever possible.
- Myers hubs with ground lug shall be used for conduit connections.
- Bond conduit to cable trays with 6AWG bare copper wire. Multi-strand wire for ^WG and larger is acceptable
- Conduit Identification is specified on page 3C-10.
  - All conduit installed shall be clearly identified with its raceway number and clearly visible.
  - Conduit labels shall be a white water proof material imprinted with a permanent black

Ground Cable: Use 2/0 bare copper cable connected to tray grounds.

Route #	1	2	3	4	5	6
Drawing Trace Color						
General Desc.	1COA-CAB-3 to 1SGB-CAB-0009	1COA-CAB-3 to 1SGB-CAB-0010	1APA-PPL-008 to 1SGB-CAB-0010	1APA-PPL-009 to 1SGB-CAB-0009	1APA-PPL-008 to 1SGB-FT-0155	1APA-PPL-008 to 1SGB-FT-0157
Detailed Route Desc.	1COA-CAB-0003 (4718'), 1WPC0011 (4708'), 1WPC0007 (4708'), 1TLB0086 (4708' - 4697'), 1TLB0111 (4697' - 4743') 1TLB0102 (4758' - 4773') 1TLB0103 (4788') 1TLC0055 (4788') 1RLG0631 (4788' - 4803') 1SGA-CAB-9 (4803')	1COA-CAB-0003 (4718'), 1WPC0011 (4708'), 1WPC0007 (4708'), 1TLB0086 (4708' - 4697'), 1TLB0111 (4697' - 4743') 1TLB0102 (4758' - 4773') 1TLB0103 (4788') 1TLC0055 (4788') 1RLG0632 (4788') 1WLC0042 (4788' - 4803) 1RLG0633 (4803') 1TLC0067 (4803') 1TLC0066 (4803' - 4788') 1WLC0045 (4788') 1WLC0043 (4788') 1RLG0634 (4788'-4803') 1SGA-CAB-10 (4803')	1APA-PPL-008 (4788') 1WLC0288 (4788') 1WLC0042 (4788') 1RLG0633 (4803') 1TLC0067 (4803') 1TLC0066 (4803' - 4788') 1WLC0045 (4788') 1WLC0043 (4788') 1RLG0634 (4803') 1SGA-CAB-10 (4803')	1APA-PPL-009 (4788') 1WLC0287 (4788') 1TLC0054 (4788') 1RLG0631 (4788' - 4803') 1SGA-CAB-9 (4803')	1APA-PPL-008 1WLC0288 1WLC0042 1RLG0637 (4788') 1SGB-FT-0155	1APA-PPL-008 1WLC0288 1WLC0042 1RLG0633 (4803') 1TLC0067 (4803') 1TLC0066 (4803' - 4788') 1WLC0045 (4788') 1WLC0043 (4788') 1RLG0644 (4803') 1RLG0645 (4803') 1SGB-FT-0157

Route #	7	8	9	10	11	12
Drawing Trace Color						
General Desc.	1APA-PPL-009 to 1SGB-FT-0156	1APA-PPL-009 to 1SGB-FT-0158	1SGB-CAB-9 to 1SGB-FT-0155	1SGB-CAB-9 to 1SGB-FT-0156	1SGB-CAB-10 to 1SGB-FT-0157	1SGB-CAB-10 to 1SGB-FT-0158
Detailed Route Desc.	1APA-PPL-009 1WLC0287 1TLC0054 1RLG0642 (4788' - 4803') 1RLG0643 (4788' - 4803') 1SGB-FT-0156	1APA-PPL-009 1RLG0652 (4788") 1WLC0038 1WLC0040 1WLC0039 1RLG0650 (4788' - 4803') 1RLG0651 (4788' - 4803')	1SGB-CAB-9 1RLG0631 (4788' - 4803') 1RLG0632 (4788") 1WLC0042 1RLG0637 (4803') 1SGB-FT-0155	1SGB-CAB-9 1RLG0631 (4788' - 4803') 1TLC0054 1RLG0642 (4788' - 4803') 1RLG0643 (4788' - 4803') 1SGB-FT-0156	1SGB-CAB-10 1RLG0634 (4788' - 4803') 1WLC0043 (4788') 1RLG0644 (4788' - 4803') 1RLG0645 (4788' - 4803') 1SGB-FT-0157	1SGB-CAB-10 1RLG0634 (4788' - 4803') 1WLC0039 1RLG0650 (4788' - 4803') 1RLG0651 (4788' - 4803') 1SGB-FT-0158

IP7_0397738

Route #	13	14	15	16	17	18
Drawing Trace Color						
General Desc.	1SGB-CAB-9 to 1SGB-CDR-0169	1SGB-CAB-9 to 1SGB-CDR-0170	1SGB-CAB-10 to 1SGB-CDR-0171	1SGB-CAB-10 to 1SGB-CDR-0172	1SGB-CAB-9 to 1SGB-CDR-173	1SGB-CAB-9 to 1SGB-CDR-174
Detailed Route Desc.	1SGB-CAB-9 1RLG0631 (4788' - 4803') 1RLG0632 (4788') 1WLC0042 1RLG0636 (4803') 1SGB-CDR-0169	1SGB-CAB-9 1RLG0631 (4788' - 4803') 1TLC0054 1RLG0642 (4788' - 4803') 1SGB-CDR-0170	1SGB-CAB-10 1RLG0634 (4788' - 4803') 1WLC0043 (4788') 1RLG 0644 (4788' - 4803') 1SGB-FT-0171	1SGB-CAB-10 1RLG0634 (4788' - 4803') 1WLC0039 1RLG0650 (4788' - 4803') 1SGB-CDR-172	1SGB-CAB-9 1RLG0638 (4803') 1SGB-CDR-173	1SGB-CAB-9 1RLG0640 (4803') 1SGB-CDR-174

Route #	19	20	21	22	23	24
Drawing Trace Color						
General Desc.	1SGB-CAB-10 to 1SGB-CDR-0175	1SGB-CAB-10 to 1SGB-CDR-0176	1SGB-CAB-9 to 1SGB-CDR-0177	1SGB-CAB-9 to 1SGB-CDR-0178	1SGB-CAB-10 to 1SGB-CDR-179	1SGB-CAB-10 to 1SGB-CDR-180
Detailed Route Desc.	1SGB-CAB-10 1RLG0646 (4803') 1SGB-CDR-0175	1SGB-CAB-10 1RLG0648 (4803') 1SGB-CDR-0176	1SGB-CAB-9 1RLG0638 (4803') 1RLG0639 (4803') 1SGB-CDR-0177	1SGB-CAB-9 1RLG0640 (4803') 1RLG0641 (4803') 1SGB-CDR-0178	1SGB-CAB-10 1RLG0646 (4803') 1RLG0647 (4803') 1SGB-CDR-179	1SGB-CAB-10 1RLG0648 (4803') 1RLG0649 (4803') 1SGB-CDR-180

Route #	25	26	27	28		
Drawing Trace Color	1SGB-CAB-11 to 1SGB-TE-1679	1SGB-CAB-12 to 1SGB-TE-1680	1SGB-CAB-13 to 1SGB-TE-1681	1SGB-CAB-14 to 1SGB-TE-1682		
General Desc.						
Detailed Route Desc.	1SGB-CAB-11 1RLG0653 (4803') 1SGB-TE-1679	1SGB-CAB-12 1RLG0654 (4803') 1SGB-TE-1680	1SGB-CAB-13 1RLG0655 (4803') 1SGB-TE-1681	1SGB-CAB-14 1RLG0656 (4803') 1SGB-TE-1682		

ELECTRICAL & INSTRUMENT WIRING

	Item No.	Type iw=Inst. Wire pw=Pwr.Wire	Description	New Conduit m=multipe circuit s=single circuit		Project Circuit ID	Elev./Column&Row/Routing	Cable Dia.	Route #	ESTIMATED Cable Length
		INSTRUMENT WIRING TO CAB								
CCS to South Side Common CAB	1.	Iw	3rd lvl relay room to 9th lvl So. side blr center UCM13 to SGB-CAB-9 4pr/16 awg-FR-shielded/twisted	m	1RLG0631	1SGB260901	UCM 13 to 1SGB- CAB-9 - 371'	.695	1	400
	2.	Iw	3rd lvl relay room to 9th lvl So. side blr center UCM13 to SGB-CAB-9 4pr/16 awg-FR-shielded/twisted	m	1RLG0631	1SGB260902	UCM 13 to 1SGB- CAB-9 - 371'	.695	1	400
	3.	Iw	3rd lvl relay room to 9th lvl So. side blr center UCM13 to SGB-CAB-9 4pr/16 awg-FR-shielded/twisted	m	1RLG0631	1SGB260903	UCM 13 to 1SGB- CAB-9 - 371'	.695	1	400
	4.	Iw	3rd lvl relay room to 9th lvl So. side blr center UCM13 to SGB-CAB-9 4pr/16 awg-FR-shielded/twisted	m	1RLG0631	1SGB260904	UCM 13 to 1SGB- CAB-9 - 371'	.695	1	400
	5.	Iw	3rd lvl relay room to 9th lvl So. side blr center UCM13 to SGB-CAB-9 4pr/16 awg-FR-shielded/twisted	m	1RLG0631	1SGB260927	UCM 13 to 1SGB- CAB-9 - 371'	.695	1	400
CCS to North Side Common CAB	6.	Iw	3rd lvl relay room to 9th lvl So. side blr center UCM13 to SGB-CAB-10 4pr/16 awg-FR-shielded/twisted	m m m	1RLG0632 1RLG0633 1RLG0634	1SGB261001	UCM 13 to 1SGB- CAB-10 - 487'	.695	2	600
	7.	Iw	3rd lvl relay room to 9th lvl So. side blr center UCM13 to SGB-CAB-10 4pr/16 awg-FR-shielded/twisted	m m m	1RLG0632 1RLG0633 1RLG0634	1SGB261002	UCM 13 to 1SGB- CAB-10 - 487'	.695	2	600
	8.	Iw	3rd lvl relay room to 9th lvl So. side blr center UCM13 to SGB-CAB-10 4pr/16 awg-FR-shielded/twisted	m m m	1RLG0632 1RLG0633 1RLG0634	1SGB261003	UCM 13 to 1SGB- CAB-10 - 487'	.695	2	600
	9.	Iw	3rd lvl relay room to 9th lvl So. side blr center UCM13 to SGB-CAB-10 4pr/16 awg-FR-shielded/twisted	m m m	1RLG0632 1RLG0633 1RLG0634	1SGB261004	UCM 13 to 1SGB- CAB-10 - 487'	.695	2	600
	10.	Iw	3rd lvl relay room to 9th lvl So. side blr center UCM13 to SGB-CAB-10 4pr/16 awg-FR-shielded/twisted	m m m	1RLG0632 1RLG0633 1RLG0634	1SGB261027	UCM 13 to 1SGB- CAB-10 - 487'	.695	2	600
							Total			5000

			INSTRUMENT WIRING from CABs to FTs, DRVs, & TEs.							
So. Side Common CAB to DRVs	1.	Iw	9th lvl - CAB9 to SW OFA hdr inlet dmpr drive SGB-CAB-9 to CDR-169 1Triad/16 awg-FR-shielded/twisted	m	1RGL0636	1SGB260906	1SGB- CAB-9 to 1SGB-CDR-0169- 85'	.355	13	90
	2.	Iw	9th lvl - CAB9 to SE OFA hdr inlet dmpr drive SGB-CAB-9 to CDR-170 1Triad/16 awg-FR-shielded/twisted	m	1RGL0642	1SGB260912	1SGB- CAB-9 to 1SGB-CDR-0170- 85'	.355	14	90
	3.	Iw	9th lvl - CAB9 to SW OFA 2/3 port dmpr drive SGB-CAB-9 to CDR-173 1Triad/16 awg-FR-shielded/twisted	m	1RGL0638	1SGB260908	1SGB- CAB-9 to 1SGB-CDR-0173- 32'	.355	17	40
	4.	Iw	9th lvl - CAB9 to SE OFA 2/3 port dmpr drive SGB-CAB-9 to CDR-174 1Triad/16 awg-FR-shielded/twisted	m	1RGL0640	1SGB260914	1SGB- CAB-9 to 1SGB-CDR-0174- 32'	.355	18	40
	5.	Iw	9th lvl - CAB9 to SW OFA 1/3 port dmpr drive SGB-CAB-9 to CDR-177 1Triad/16 awg-FR-shielded/twisted	m	1RGL0639	1SGB260910	1SGB- CAB-9 to 1SGB-CDR-0177- 27'	.355	21	35
	6.	Iw	9th lvl - CAB9 to SE OFA 1/3 port dmpr drive SGB-CAB-9 to CDR-178 1Triad/16 awg-FR-shielded/twisted	m	1RGL0641	1SGB260916	1SGB- CAB-9 to 1SGB-CDR-0178- 27'	.355	22	35
No. Side Common CAB to DRVs	7.	Iw	9th lvl - CAB10 to NW OFA hdr inlet dmpr drive SGB-CAB-10 to CDR-171 1Triad/16 awg-FR-shielded/twisted	m	1RGL0644	1SGB261006	1SGB- CAB-10 to 1SGB-CDR-0171- 85'	.355	15	90
	8.	Iw	9th lvl - CAB10 to NE OFA hdr inlet dmpr drive SGB-CAB-10 to CDR-172 1Triad/16 awg-FR-shielded/twisted	m	1RGL0650	1SGB261012	1SGB- CAB-10 to 1SGB-CDR-0172- 85'	.355	16	90
	9.	Iw	9th lvl - CAB10 to NW OFA 2/3 port dmpr drive SGB-CAB-10 to CDR-175 1Triad/16 awg-FR-shielded/twisted	m	1RGL0646	1SGB261008	1SGB- CAB-10 to 1SGB-CDR-0175- 32'	.355	19	40
	10.	Iw	9th lvl - CAB10 to NE OFA 2/3 port dmpr drive SGB-CAB-10 to CDR-176 1Triad/16 awg-FR-shielded/twisted	m	1RGL0648	1SGB261014	1SGB- CAB-10 to 1SGB-CDR-0176- 32'	.355	20	40
	11.	Iw	9th lvl - CAB10 to NW OFA1/3 port dmpr driveSGB-CAB-10 to CDR-179 1Triad/16 awg-FR-shielded/twisted	m	1RGL0647	1SGB261010	1SGB- CAB-10 to 1SGB-CDR-0179- 27'	.355	23	35

	12.	Iw	9th lvl - CAB10 to NE OFA 1/3 port dmpr drive SGB-CAB-10 to CDR-180 1Triad r/16 awg-FR-shielded/twisted	m	1RGL0649	1SGB261016	1SGB- CAB-10 to 1SGB-CDR-0180- 27'	.355	24	35
Common CAB to FTs	13.	Iw	9th lvl CAB9 to SW OFA CAMS flw xmiter SGB-CAB-9 to FT-155 1pr/16 awg-FR-shielded/twisted	m	1RGL0637	1SGB260925	1SGB- CAB-9 to 1SGB-FT-0155- 80'	695/.34	9	90
	14.	Iw	9th lvl CAB 9 to SE OFA CAMS flw xmiter SGB-CAB-9 to FT-156 1pr/16 awg-FR-shielded/twisted	m	1RGL0642 1RGL0643	1SGB260926	1SGB- CAB-9 to 1SGB-FT-0156- 80'	695/.34	10	90
	15.	Iw	9th lvl CAB10 to NW OFA CAMS flw xmiter SGB-CAB-10 to FT-157 1pr/16 awg-FR-shielded/twisted	m	1RGL0644 1RGL0645	1SGB261025	1SGB- CAB-10 to 1SGB-FT-157- 80'	695/.34	11	90
	16.	Iw	9th lvl CAB10 to NE OFA CAMS flw xmiter SGB-CAB-10 to FT-158 1pr/16 awg-FR-shielded/twisted	m	1RGL0650 1RGL0651	1SGB261026	1SGB- CAB-10 to 1SGB-FT-158- 80'	.695/.34	12	90
							Total			1020
CAMS CABs to TEs	1.	Iw	9th lvl CAB11to SW OFA Duct TE SGB-CAB-11 to TE-1679 3pr/16 awg-FR-shielded/twisted	m	1RGL0653	1SGB261102	1SGB- CAB-9 to 1SGB-TE-1679- 80'	695/.34	25	50
	2.	Iw	9th lvl CAB 9 to SE OFA CAMS flw xmiter SGB-CAB-11 to TE-1680 3pr/16 awg-FR-shielded/twisted	m	1RGL0654	1SGB261104	1SGB- CAB-9 to 1SGB-TE-1680- 80'	695/.34	26	50
	3.	Iw	9th lvl CAB10 to NW OFA CAMS flw xmiter SGB-CAB-11 to TE-1681 3pr/16 awg-FR-shielded/twisted	m	1RGL0655	1SGB261106	1SGB- CAB-10 to 1SGB-TE-1681- 80'	695/.34	27	50
	4.	Iw	9th lvl CAB10 to NE OFA CAMS flw xmiter SGB-CAB-11 to TE-1682 3pr/16 awg-FR-shielded/twisted	m	1RGL0656	1SGB261108	1SGB- CAB-10 to 1SGB-TE-1682- 80'	.695/.34	28	50
							Total			200
		POWER								
PPL to South CAB	1.	Pw	8th lvl SE to 9th lvl south center PPL-009 to SGB-CAB-9, CDR169, 12 awg-FR-3/C	m	1RLG0631	1SGB260917	PPL009 (4788' 11") to CAB-9 - 75' - Route 4	0.5	4	100
	2.	Pw	8th lvl SE to 9th lvl south center PPL-009 to SGB-CAB-9, CDR170, 12 awg-FR-3/C	m	1RLG0631	1SGB260920	PPL009 (4788' 11") to CAB-9 - 75' - Route 4	0.5	4	100
	3.	Pw	8th lvl SE to 9th lvl south center PPL-009 to SGB-CAB-9, CDR173, 12 awg-FR-3/C	m	1RLG0631	1SGB260918	PPL009 (4788' 11") to CAB-9 - 75' - Route 4	0.5	4	100

	4.	Pw	8th lvl SE to 9th lvl south center PPL-009 to SGB-CAB-9, CDR175, 12 awg-FR-3/C	m	1RLG0631	1SGB260921	PPL009 (4788' 11") to CAB-9 - 75' - Route 4	0.5	4	100
	5.	Pw	8th lvl SE to 9th lvl south center PPL-009 to SGB-CAB-9, CDR177. 12 awg-FR-3/C	m	1RLG0631	1SGB260919	PPL009 (4788' 11") to CAB-9 - 75' - Route 4	0.5	4	100
	6.	Pw	8th lvl SE to 9th lvl south center PPL-009 to SGB-CAB-9, CDR178, 12 awg-FR-3/C	m	1RLG0631	1SGB260922	PPL009 (4788' 11") to CAB-9 - 75' - Route 4	0.5	4	100
PPLs to FTs	7.	Pw	8th lvl SW to 9th lvl SW PPL-008 to FT155, 12 awg-FR-3/C	m	1RLG0637	1SGB260923	PPL008 (4788' 11") to FT-0155 - 66'	0.5	5	70
	8.	Pw	8th lvl SE to 9th lvl SE PPL-009 to FT156, 12 awg-FR-3/C	m	1RLG0642 1RLG0643	1SGB260924	PPL008 (4788' 11") to FT-0156 - 66'	0.5	7	70
	9.	Pw	8th lvl SW to 9th lvl NW PPL-008 to FT157, 12 awg-FR-3/C	m m	1RLG0633 1RLG0644 1RLG0645	1SGB261023	PPL008 (4788' 11") to FT-0157 - 181'	0.5	6	200
	10.	Pw	8th lvl SE to 9th lvl NE PPL-009 to FT158, 12 awg-FR-3/C	S m	1RLG0652 1RLG0650 1RLG0651	1SGB261024	PPL009 (4788' 11") to FT-0156 - 181'	0.5	8	200
PPL to North CAB	11.	Pw	8th lvl SE to 9th lvl north center PPL-008 to SGB-CAB-10, CDR171, 12 awg-FR-3/C	m m	1RLG0633 1RLG0634	1SGB261017	PPL008 (4788' 11") to CAB-10 - 310' - Route 3	0.5	3	310
	12.	Pw	8th lvl SE to 9th lvl north center PPL-008 to SGB-CAB-10, CDR172, 12 awg-FR-3/C	m m	1RLG0633 1RLG0634	1SGB261020	PPL008 (4788' 11") to CAB-10 - 310' - Route 3	0.5	3	310
	13.	Pw	8th lvl SE to 9th lvl north center PPL-008 to SGB-CAB-10, CDR175, 12 awg-FR-3/C	m m	1RLG0633 1RLG0634	1SGB260918	PPL008 (4788' 11") to CAB-10 - 310' - Route 3	0.5	3	310
	14.	Pw	8th lvl SE to 9th lvl north center PPL-008 to SGB-CAB-10, CDR176,12 awg-FR-3/C	m m	1RLG0633 1RLG0634	1SGB260921	PPL008 (4788' 11") to CAB-10 - 310' - Route 3	0.5	3	310
	15.	Pw	8th lvl SE to 9th lvl north center PPL-008 to SGB-CAB-10, CDR179. 12 awg-FR-3/C	m m	1RLG0633 1RLG0634	1SGB260919	PPL008 (4788' 11") to CAB-10 - 310' - Route 3	0.5	3	310
	16.	Pw	8th lvl SE to 9th lvl north center PPL-008 to SGB-CAB-10, CDR180, 12 awg-FR-3/C	m m	1RLG0633 1RLG0634	1SGB260922	PPL008 (4788' 11") to CAB-10 - 310' - Route 3	0.5	3	310
							Total			3000

So. side Common CAB to DRVs	17.	Pw	9th lvl CAB to SW OFA inlet dmpr drive SGB-CAB-9 to CDR-169, 12 awg-FR-4/C	m	1RLG0636	1SGB260905	1SGB- SGB-CAB-9 to 1SGB-CDR-0169- 85'	0.54	13	120
	18.	Pw	9th lvl CAB to SE OFA inlet dmpr drive SGB-CAB-9 to CDR-170, 12 awg-FR-4/C	m	1RLG0642	1SGB260911	1SGB- CAB-9 to 1SGB-CDR-0170- 85'	0.54	14	120
	19.	Pw	9th lvl CAB to SW OFA 2/3 port dmpr drive SGB-CAB-9 to CDR-173, 12 awg-FR-4/C	m	1RLG0638	1SGB260907	1SGB- CAB-9 to 1SGB-CDR-0173- 32'	0.54	17	40
	20.	Pw	9th lvl CAB to SE OFA 2/3 port dmpr drive SGB-CAB-9 to CDR-174, 12 awg-FR-4/C	m	1RLG0640	1SGB260913	1SGB- CAB-9 to 1SGB-CDR-0174- 32'	0.54	18	40
	21.	Pw	9th lvl CAB to SW OFA 1/3 port dmpr drive SGB-CAB-9 to CDR-177, 12 awg-FR-4/C	m	1RLG0638 1RLG0639	1SGB260909	1SGB- CAB-9 to 1SGB-CDR-0177- 27'	0.54	21	35
	22.	Pw	9th lvl CAB to SE OFA 1/3 port dmpr drive SGB-CAB-9 to CDR-178, 12 awg-FR-4/C /C	m	1RLG0640 1RLG0641	1SGB260915	1SGB- CAB-9 to 1SGB-CDR-0178- 27'	0.54	22	35
So. side CAB to DRVs	23.	Pw	9th lvl CAB to NW OFA inlet dmpr drive SGB-CAB-10 to CDR-171, 12 awg-FR-4/C	m m	1RLG0644	1SGB261005	1SGB- CAB-10 to 1SGB-CDR-0171- 85'	0.54	15	120
	24.	Pw	9th lvl CAB to NE OFA inlet dmpr drive SGB-CAB-10 to CDR-172, 12 awg-FR-4/C	m m	1RLG0650	1SGB261011	1SGB- CAB-10 to 1SGB-CDR-0172- 85'	0.54	16	120
	25.	Pw	9th lvl CAB to NW OFA 2/3 port dmpr drive SGB-CAB-10 to CDR-175, 12 awg-FR-4/C	m m	1RLG0646	1SGB261007	1SGB- CAB-10 to 1SGB-CDR-0175- 32'	0.54	19	40
	26.	Pw	9th lvl CAB to NE OFA 2/3 port dmpr drive SGB-CAB-10 to CDR-176, 12 awg-FR-4/C	m m	1RLG0648	1SGB261013	1SGB- CAB-10 to 1SGB-CDR-0176- 32'	0.54	20	40
	27.	Pw	9th lvl CAB to NW OFA1/3 port dmpr drive SGB-CAB-10 to CDR-179, 12 awg-FR-4/C	m m	1RLG0646 1RLG0647	1SGB261009	1SGB- CAB-10 to 1SGB-CDR-0179- 27'	0.54	23	35
	28.	Pw	9th lvl CAB to NE OFA 1/3 port dmpr drive SGB-CAB-10 to CDR-180, 12 awg-FR-4/C	m m	1RLG0648 1RLG0649	1SGB261015	1SGB- CAB-10 to 1SGB-CDR-0180- 27'	0.54	24	35
							Total			780

NEW CONDUIT & Included Cables						
Conduit	Routes	Included Cables	Dia. Cable	Area/Cable	Total Cable Area	Recommended Conduit Size
1RLG0631	1	1SGBK260901	.695	.38	4.3	4"
	4	1SGBK260902	.695	.38		
	9	1SGBK260903	.695	.38		
	10	1SGBK260904	.695	.38		
	13	1SGBK260927	.695	.38		
	14	1SGBK260917	.5	.2		
		1SGBK260918	.5	.2		
		1SGBK260919	.5	.2		
		1SGBK260920	.5	.2		
		1SGBK260921	.5	.2		
		1SGBK260922	.5	.2		
		1SGBK260925	.34	.1		
		1SGBK260926	.34	.1		
		1SGBK260905	.54	.23		
		1SGBK260906	.355	.1		
		1SGBK260911	.54	.23		
		1SGBK260912	.355	.1		
			+(2x.46 future)	+.34 (future)		
1RLG0632	2	1SGBK261001	.695	.38	2.23	4"
	9	1SGBK261002	.695	.38		
	13	1SGBK261003	.695	.38		
		1SGBK261004	.695	.38		
		1SGBK260925	.695	.38		
		1SGBK260906	.355	.1		
		1SGBK260905	.54	.23		
1RLG0633	2	1SGBK261001	.695	.38	2.92	4"
	3	1SGBK261002	.695	.38		
	6	1SGBK261003	.695	.38		
		1SGBK261004	.695	.38		
		1SGBK261017	.5	.2		
		1SGBK261018	.5	.2		
		1SGBK261019	.5	.2		
		1SGBK261020	.5	.2		
		1SGBK261021	.5	.2		
		1SGBK261023	.5	.2		

IP7_039745

1RLG0634	2 3 11 12 15 16	1SGBK261001 1SGBK261002 1SGBK261003 1SGBK261004 1SGBK261027 1SGBK261017 1SGBK261018 1SGBK261019 1SGBK261020 1SGBK261021 1SGBK261023 1SGBK261025 1SGBK261026 1SGBK261005 1SGBK261006 1SGBK261011 1SGBK261012	.695 .695 .695 .695 .695 .5 .5 .5 .5 .5 .5 .695 .695 .54 .355 .54 .355	.38 .38 .38 .38 .2 .2 .2 .2 .2 .2 .38 .38 .23 .1 .23 .1	4.3	4"
1RLG0636	13	1SGBK260906 1SGBK260905	.355 .54	.1 .23 (.17 future)	0.5	1.5"
1RLG0637	5 9	1SGBK260923 1SGBK260925	.5 .34	.2 .1 (+.28 future)	.58	1.5"
1RLG0638	17 21	1SGBK260908 1SGBK260907 1SGBK260909 1SGBK260910	.355 .54 .54 .355	.1 .23 .23 .1 (+2x.17 future)	1.0	2"
1RLG0639	21	1SGBK260909 1SGBK260910	.54 .355	.23 .1 (.17 future)	.5	1.5"
1RLG0640	18 22	1SGBK260914 1SGBK260913 1SGBK260916 1SGBK260915	.355 .54 .355 .54	.1 .23 .1 .23 (2x.17 future)	1.0	2"
1RLG0641	22	1SGBK260915 1SGBK260916	.54 .355	.23 .1 (.17 future)	.5	15"
1RLG0642	7 10 14	1SGBK260924 1SGBK260926 1SGBK260912 1SGBK260911	.5 .34 .355 .54	.2 .1 .1 .23 (.17 future) (.28 future)	.8	2"

1RLG0643	7 10	1SGBK260924 1SGBK260926	.5 .34	.2 .1 .28 (future)	.58	1.5"
1RLG0644	6 11 15	1SGBK261023 1SGBK261025 1SGBK261006 1SGBK261005	.5 .34 .355 .54	.2 .1 .1 .23 (.17 future) (.28 future)	1.08	2"
1RLG0645	6 11	1SGBK261023 1SGBK261025	.5 .34	.2 .1 (.28 future)	.58	1.5"
1RLG0646	19 23	1SGBK261008 1SGBK261007 1SGBK261010 1SGBK261009	.355 .54 .355 .54	.1 .23 .1 .23 (2x .17 future)	1.0	2"
1RLG0647	23	1SGBK261010 1SGBK261009	.355 .54	.1 .23 (.17 future)	.5	1.5"
1RLG0648	20 24	1SGBK261014 1SGBK261013 1SGBK261015 1SGBK261016	.355 .54 .54 .355	.1 .23 .23 .1 (2x.17 future)	1.0	2"
1RLG0649	24	1SGBK261015 1SGBK261016	.54 .355	.23 .1 (.17 future)	.5	1.5"
1RLG0650	8 12 16	1SGBK261024 1SGBK261026 1SGBK261012 1SGBK261011	.5 .34 ..355 .54	.2 .1 .1 .23 (.17 future) (.28 future)	1.08	2"
1RLG0651	8 12	1SGBK261024 1SGBK261026	.5 .34	.2 .1 (.28 future)	.58	1.5"
1RLG0652	8	1SGBK261024	.5	.2	.2	.75"
1RLG0653	25	1SGBK261102	.61	.29	.29	.75"
1RLG0654	26	1SGBK261104	.61	.29	.29	.75"
1RLG0655	27	1SGBK261106	.61	.29	.29	.75"
1RLG0656	28	1SGBK261108	.61	.29	.29	.75"

IP7_039747

I need some modifications made to the following drawings for the OFA project. The same changes as were made to:
1COA-K2805A
1COA-K2806B
1COA-K2807A
1COA-K2808A
(located in N:\Current\Projects\IGS02\IGS02-14 Boiler Modifications - JHN\6.Documentation\Controls-KMN\U1 I & E Drawings)

need to be made to:
2COA-K2805A
2COA-K2806B
2COA-K2807A
2COA-K2808A.

I also need the following drawings created for Unit 2 just like was done for unit 1:

Existing U1 drawing:
1COA-K2810
1SGB-K2609
1SGB-k2610
1SGB-K2611

U2 drawings to be created:
2COA-K2810
2SGB-K2609
2SGB-k2610
2SGB-K2611

Finally, I need to have the drawing 2APA-E1630 check-out to me for this project.

All these drawings should be checked out to me under the DCS project (IGS01-03). Please make the modifications and place the drawings in the "N:\Current\Projects\IGS02\IGS02-14 Boiler Modifications - JHN\6.Documentation\Controls-KMN\U2 I & E Drawings" folder.

Let me know if there are any questions or problems about this request. I could use these drawings as soon as possible if possible.
Thanks,
Ken Nielson

Intermountain Generating Station - OverFire Air Instrumentation Tubing Corrections

Scope of Work

Tubing from CAMS to Duct Inlet volu-probes:

- Pressure check and snoop all tubing.
- Weld all threaded joints inside the ducts that were not sealed with anti-seize.
- Put anti-seize (silver) on all threaded joints exposed to high temperature on outside of the ducts.
- Put anti-seize or teflon tape on all threaded joints external to the duct that are not at high temperature locations.
- Repair leak to connection at CAMS panel.
- Pressure check all tubing runs using CAMS purge air system.

Tubing from OFA port Volu-probes to Magnehelic meters:

- Pressure check and snoop all tubing runs.
- Check valves for leaks.
- Weld any leaking, threaded connections inside duct.
- Put anti-seize (silver) on all threaded joints external to the duct that are at high temperature locations.
- Put anti-seize or teflon on all threaded joints external to the duct that are not at high temperature locations.
- Final pressure check all tubing runs.

Protection of Instrumentation:
All work must be completed without damaging flow elements or instrumentation.

Timetable
Access to duct from approximately 4 /5/03 at 12:00 to 4/6/03 at 12:00. All work internal to the duct must be completed and tested prior to the end of this interval.

Conditions

- Ducts are likely to be warm, protective clothing recommended.
- Ladders will be required for work on above port ducts.
- All list of all persons to work on the system will be required in advance for authorization through IPSC security.
- All personnel working on-site will require IPSC safety orientation.
- Persons entering ducts will be required to sign on IPSC group clearance.

Intermountain Generating Station

NOx control and CO Monitoring, Over Fire Air System Validation and Testing

1) Goals
   a) Collection of baseline CO and NOx level measurements through test load range.
   b) Identification of flue gas stratification zones and consistent combustion anomalies.
   c)
2) Testing
   a) Installation and configuration of test grid for CO levels prior to U1 outage.
      i) Location of test instrumentation
      ii) Recommended means and methods of testing
   b) Test: collection of combustion data through load range of 60% to 100% of maximum load.
   c) Re-test: collection of combustion data through 60% to 100% load range following installation and implementation of OFA equipment.
   d) Removal of test equipment.
   e) Recommendations for long-term CO monitoring.

Babcock Power, Inc.
Worcester, MA

Control of Overfire Air
For
Intermountain Power - Unit 2
850 West Brush Wellman Road
Delta, Utah

Babcock Power Inc. Contract 100210

December 30, 2002
Revision 1: January 3, 2003

Description if the Overfire Air (OFA) System and Control Devices.

The overfire air system consists of new rows of OFA ports located above the top burner elevation, front and rear of the boiler. There are two sets of ports with a relative area split of 1/3 and 2/3. The 1/3 ports over the 2/3 ports, and both located directly above each of the six burner columns. Similar sets of two ports, the "wing ports", are located beyond the burner columns, close to the side walls of the boiler, for a total of 8, 1/3 ports and 8, 2/3 ports on the front and the same on the rear side of the boiler.

Sets of four, either 1/3 or 2/3 port dampers, are connected together (ganged) by means of linkages so that the four port dampers of the same kind are operated simultaneously by means of a single Jordan rotary electrical damper operator. There are then a total of four damper drives on the front and four on the rear of the boiler.

The linkages as well as the ducts that form the 1/3 and the 2/3 ports are all internally located in OFA crossover ducts, front and rear. The crossover ducts are fed by four OFA feeder ducts connected to the air plenums that convey secondary air to the burner elevations on the left and right sides of the unit.

The damper drives that operate the 1/3 damper trains are Jordan SM-5120 series, powered by single phase, 120 VAC and furnished with remotely located servo-amplifiers capable of receiving 4-20 mA demand signals and providing 4-20 mA position signals for the Purchaser's use.

The damper drives that operate the 2/3 damper trains are higher torque Jordan SM-5220 series with the same characteristics as the 1/3 port damper drives.

Each of the OFA "feeder" ducts at each corner of the unit is provided with a balancing damper driven by a Jordan SM-5220

IP7_039751

series drive with the same electrical characteristics as the ones for the port dampers.

There is also an Air Monitor Corporation array of three VOLU-probes and thermocouples to measure OFA mass flow on each of the feeder ducts. Each array is provided with a CAMM "Smart" mass flow transmitter and "Combustion Air Management System" (CAMS) to provide automatic compressed air purge to the VOLU-probes.

Description of the Proposed Control Strategy.

Note: All boiler load setpoint values and OFA to secondary air ratio setpoint curve, described below, are initial values. These values will be revised based on the results of the commissioning performance tests. Please refer to documentation to be provided by BPI.

Overfire air is used to control NOx formation and is generally required at higher boiler loads (above 60%). OFA flow is accomplished by the combination of two actions.

First, by the programmed opening of the OFA ports of one kind or the other in the pattern described below in this description. The OFA port dampers are not modulating and are to be operated either fully open or fully closed (except for biasing of the open position to achieve balance O2 or NOx distribution on the back end of the boiler).

Secondly, by forcing secondary airflow to the OFA system. This is attained by simultaneously and identically decreasing the opening of all the combustion air dampers feeding each of the burner elevations. This decrease is to be superimposed on the existing automatic control biasing of each elevation combustion air in accordance with its pulverizer load.

Because of the very low available air pressure in the secondary air plenums feeding both the OFA ports and the burners, it is anticipated that the dampers located in the OFA feeder ducts will not be effective for modulation control (fully open they will not be able to establish the required OFA flow). These dampers are to be used only for the side to side pressure balance of the OFA crossover ducts. After balancing the pressure drops on both ducts these dampers should be left in the "as balanced" position and should be returned to that position after moving them for any reason.

Mechanical interference in the crowded OFA areas and limited space make it impossible to ideally locate the air flow monitors upstream of the balancing dampers. These monitors will be mounted in short straight runs of duct downstream of these dampers. However, these dampers will be permanently open (except for the slight bias required for balancing) and, in addition, they are of the opposed blade design. These design conditions will minimize flow pattern disturbance. Furthermore, it should be pointed out

that very accurate OFA flow measurement is not necessary to attain effective OFA control.

Automatic and simultaneous biasing of all the secondary air modulating dampers at each burner elevation, so that they attain a closer position than at present, will be used to divert air to the OFA system.

The above effect will be accomplished by a new control loop, provided, designed in detail and implemented by the Purchaser in its combustion control system. This control loop will have, as process variable; the ratio of the total measured OFA flows to the existing measured total secondary air; and as the setpoint, the desired ratio of these two air flows. This ratio is not constant and is derived by BPI as a function of total boiler load.

This secondary air damper control is additive to the existing bias required to change burner airflow in proportion to the individual pulverizer load. The action of the sum of both biases will result in less secondary air directly to the burners, as OFA is being introduced, but the relative secondary air distribution between burner elevations will remain unchanged.

Note: BPI will provide a setpoint curve showing the desired ratio of OFA flow to secondary airflow as a function of boiler load. These values will be confirmed or revised by actual tests.

Note: There shall be agreement between this setpoint curve and the actual airflow measurements: i.e. it shall be decided by the purchaser and BPI if the ratio is based on OFA to secondary air only or OFA to total combustion air, which includes primary air, based on current measurement availability.

The operator can also select a constant setpoint for commissioning or test purposes. Either setpoint is limited to the expected maximum range of OFA to total airflow ratio (i.e. 0 to 20%).

Figure 1 describes this control loop in general terms.

The OFA port relative open area sizes, 1/3 and 2/3, are calculated to provide the correct velocity of the OFA to attain the proper penetration of the OFA into the combustion region of the furnace above the burners. For this reason it is not recommended to modulate the OFA port dampers since changes in the damper position will affect the penetration velocity. All ports of a given kind: 1/3 or 2/3, will open or close following a program designed to open the correct area to roughly produce the proper penetration velocity as the OFA air flow rate changes with boiler load. The initial program is as follows:

0 to 60% boiler load:	All 1/3 and 2/3 ports closed
60 to 75% boiler load:	1/3 ports open, 2/3 ports closed
75 to 90% boiler load:	1/3 ports closed, 2/3 ports open

90 to 100% boiler load: 1/3 ports open, 2/3 ports open

An individual manual/automatic and bias station per port group damper drive is recommended.

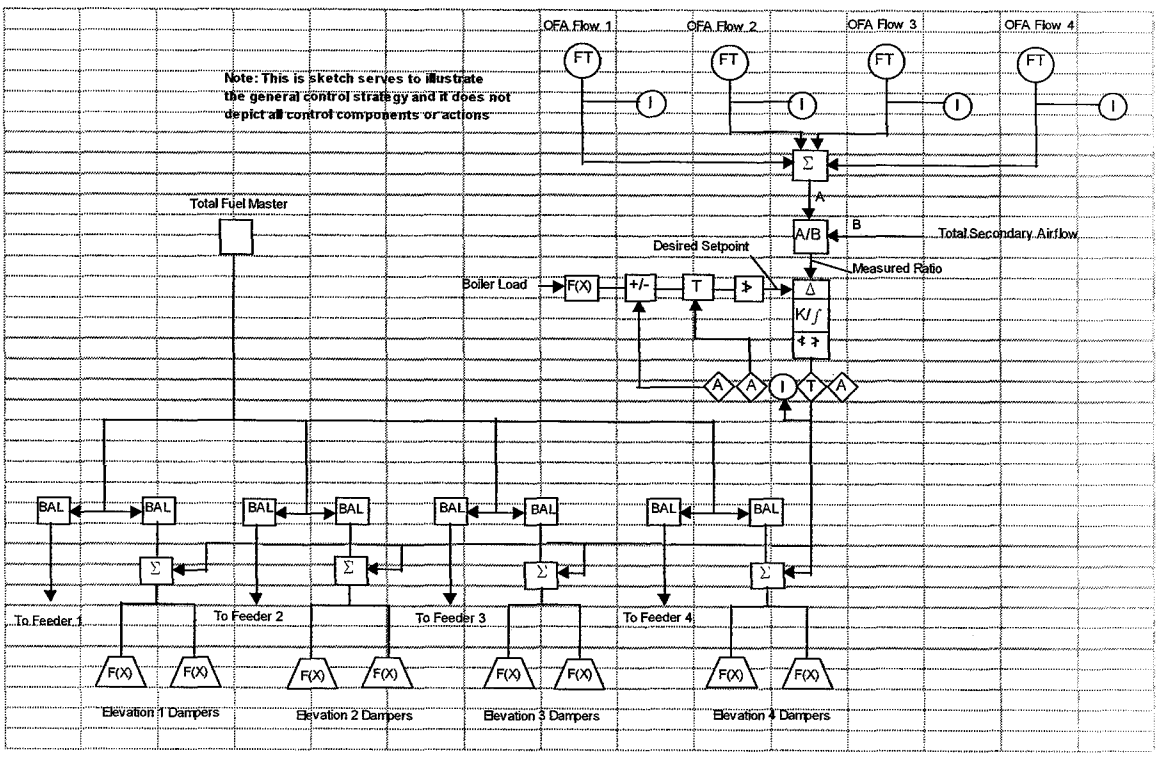

Fig 1

Intermountain Generating Station
Boiler Over-Fire Air (OFA) Installation Project

Description & Control Outline

Description if the Overfire Air (OFA) System and Control Devices.

The over-fire air (OFA) system at the Intermountain Generating Station (IGS) is being provided by Babcock Power, Inc. (BPI). It consists of a two (2) rows of OFA ports located on the elevation immediately above the top burner levels with one (1) row on the front (south) and one (1) row on the rear (north) side of the boiler. Each row consists of eight, identical, OFA ports with one port located over each of the six burner columns (column ports) and one port located on each end of the OFA rows near the side walls of the boiler (wing ports). OFA rows are divided into halves for control. Each half includes one (1) wing port and the next three, adjacent, column ports. Both halves of an OFA row are fed by a common OFA header duct.

Air to the OFA system is provided by the Secondary Air (SA) system through four (4) feeder ducts from the SA header ducts. Below the end of each OFA header, a feeder duct extends from the corresponding SA header to the end of the OFA header end. Air is admitted to the OFA header through the feeder ducts. Each OFA feeder duct includes an isolation damper operated Jordan rotary electrical drive.

OFA airflow to the boiler is admitted and controlled through the OFA port dampers. Each OFA port is partitioned into separate 1/3 and 2/3 sections with the 1/3 partition located above the 2/3 partition. Airflow through each partition is controlled by a separate port damper located in each partition. The four, 1/3 port dampers for an OFA row half are connected or ganged together for simultaneous operation by a Jordan rotary electrical drive. The same configuration is implemented for the 2/3 port damper sets. This creates a total of four (4), 1/3 port dampers/drives and four (4), 2/3 port dampers/drives for OFA flow control to the boiler.

Control and monitoring of all OFA damper drives will be done by the IGS combustion control system. Additionally, an array of three Air Monitor Corporation VOLU-probes and thermocouples will be located on each OFA feeder duct to measure OFA air flow to the boiler.

Description of the Proposed Control Strategy.

Note: All boiler load setpoint values and OFA to secondary air ratio setpoint curve, described below, are initial values. These values will be revised based on the results of the commissioning performance tests. Please refer to documentation to be provided by BPI.

OFA will be used to control NOx formation at unit loads above approximately 60% of the rated load of 950 MW. At the 60% load point and above, OFA flow will be accomplished by the combination of opening OFA feeder and port dampers and decreasing the windbox damper positions to each burner elevation in operation so as to maintain target total SA flow based on unit load.

The OFA port and feeder duct dampers are not modulating and will be operated either fully open or fully closed (except for biasing of the open position to achieve balance O2 or NOx distribution on the back end of the boiler). The OFA feeder duct dampers are to be used to balance air flow from side to side of the OFA system. OFA port dampers will be open or closed to control OFA flow to the boiler

The partial closure of windbox dampers will be achieved through biasing of the position set-point for those dampers. This SA damper control is additive to the existing bias required to change burner airflow in proportion to the individual pulverizer load. The action of the sum of both biases will result in less secondary air directly to the burners, as OFA is being introduced, but the relative secondary air distribution between burner elevations will remain unchanged. The total combustion air flow will remain unchanged with implementation the OFA system.

BPI will provide a setpoint curve showing the desired ratio of OFA flow to secondary airflow as a function of boiler load. These values will be confirmed or revised by actual tests.

The OFA port relative open area sizes, 1/3 and 2/3, are calculated to provide the correct velocity of the OFA to attain the proper penetration of the OFA into the combustion region of the furnace above the burners. All ports of a given kind, 1/3 or 2/3, will open or close following a program designed to open the correct area to roughly produce the proper penetration velocity as the OFA air flow rate changes with boiler load. The initial program is as follows:

0 to 60% boiler load:	All 1/3 and 2/3 ports closed
60 to 75% boiler load:	1/3 ports open, 2/3 ports closed
75 to 90% boiler load:	1/3 ports closed, 2/3 ports open
90 to 100% boiler load:	1/3 ports open, 2/3 ports open

An individual manual/automatic and bias station per port group damper drive will be provided. The SAMA logic diagram provided below provides an overview of the logic required to implement the OFA system.

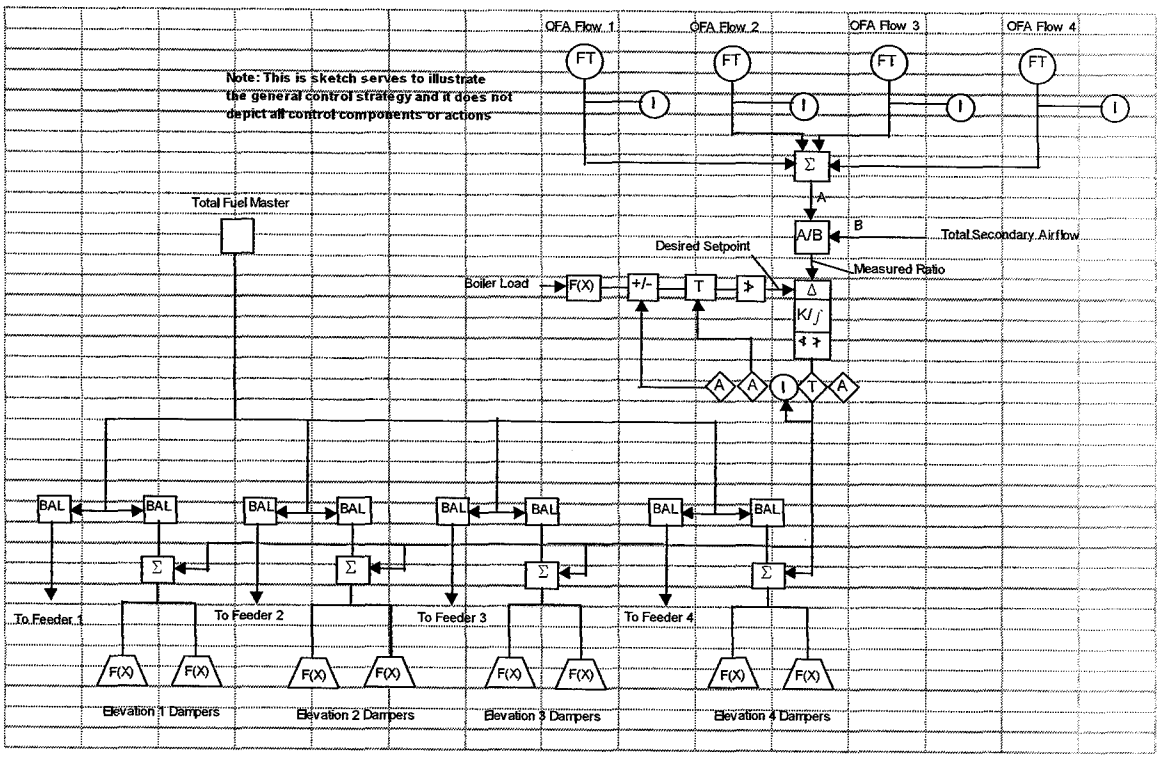

Fig 1

Hardware

1) Junction Box/Enclosures (Nema 4X)
2) Instrumentation
   a) OFA port flow instrumentation – Magna-helix flow meter
   b) Feeder duct flow instrumentation – Air Monitor CAMS system
   c) Position feedback from drives.
3) Final elements
   a) OFA port damper drives –
   b) OFA feeder duct damper drives –
4) Cabling
   a) Control cabling
   b) Monitoring cabling
   c) Power Cabling
5) Controller Modules
   a) UCM13
   b) UCM4-8???

Work List

1) Installation of Junction Box/Enclosures (Nema 4X)
2) Installation of OFA port flow instrumentation
   a) South side Magna-helix flow meters
   b) North side Magna-helix flow meters
3) Installation of OFA header flow instrumentation –
   a) Air Monitor CAMS probes and transmitter units
   b) Install plant air connections.
   c) Install power per routing
4) Final elements
   a) Install OFA port damper drives –
   b) Install OFA feeder duct damper drives –
5) Cabling & conduit Installation
   a) Conduit from JBX to instruments and drives. Instrument and power runs required for each
   b) Pull instrumentation cabling
   c) P
   d) Power Cabling
6) Controller Modules
   a) UCM13
   b) UCM4-8???
7) Install software in mSpec modules.