INTERMOUNTAIN POWER SERVICE CORPORATION

CONTRACT 04-45606

and

SPECIFICATIONS 45606

for

UNIT 2 LOW NOx BURNERS

CONTRACT ISSUED TO:

ADVANCED BURNER TECHNOLOGIES
350 MAIN STREET, SUITE 5
BEDMINSTER, NJ 07921

CONTRACT ADMINISTRATOR: JAMES NELSON

BUYER: NANCY C. BENNETT

850 West Brush Wellman Road, Delta, Utah 84624 / Telephone: (435) 864-4414 / FAX: (435) 864-6670 / Fed. I.D. #87-0388573

INTERMOUNTAIN POWER SERVICE CORPORATION

Date:
Req./PA No: 194467
P.O. No:
Vendor:
Terms:
FOB:
Ship Via:
Conf. To:

☒ REQUISITION FOR CAPITAL EQUIPMENT

☐ PURCHASE AUTHORIZATION FOR EXPENSE ITEMS

Purpose of Materials, Supplies or Services:

Addendum to Contract #04-45606, Low NOx Burner Purchased from Advanced Burner Technologies

Suggested Vendor: Advanced Burner Technologies

Account No. 002-SGX-402
Work Order No. 03-96033
Project No. IGS03-04

Qty	Unit	Description Noun Adjective Catalog # Seller or Manufacturer	Unit Cost	Extension
48	ea	253 MA, material upgrade for burner components.	$850.00	$40,800.00
48	ea	Coal flow divider, x-vane spool piece.	$850.00	$40,800.00
1	ea	Air flow measurement components from Air Monitor,		$35,220.00
		with selected upgrades. See the attached Addendum		
		to IPSC Contract 04-45606.		
		TOTAL ESTIMATED COST		$116,820.00

Remarks: This purchase requisition is intended to be an addendum to the existing contract. The above items are considered to be improvements worth purchasing at the additional cost.

Delivery requested by [Date] 11-07-03 Originator Phil Hailes

Dept. Mgr/Supt. Date Station Manager Date Operating Agent Date

Addendum to IPSC Contract 04-45606, Unit 2 Low NOx Burners

23 Oct 2003

Based on cost and experience we recommend Air Monitor as the vendor for burner air flow measurement in the U2 Low NOx burners.

The following terms are to be incorporated as the base for purchasing and installing Air Monitor's IBAM probes on 48 Low Nox burners on U2 in March 2004. This addresses our concerns with installation, accuracy, plugging, and equipment failure:

Installation:
1) Air Monitor will work with Advanced Burner Tech to provide installation drawings and material for the tubing lines from the burner through the wind box wall: ie, tubing temperature expansion bends, hangers/supports and flex connections to allow wind box expansion.
2) The installation will be 48 Velotron II transmitters with Auto-purge II/sp, with no pressure or temperature density correction, but will have a 4-20 mA output to the DCS and autopurge included.
3) Stainless steel tubing is provided to tie (header) the IBAM's together and then forward the dP signal from the IBAM pitot header to the bulkhead. The transmitter cabinets, one on each burner level, and will be installed with factory installed Velotron II differential pressure transmitters and auto purge valves. Transmitters will be installed in NEMA 4 cabinets on each burner level. Minium of 8 cabinets, it would be ok to use 16 cabinets to allow shorter tubing runs. Tubing will be supplied from the transmitter cabinet to the pitots with necessary fittings, expansion joints and flex connections.
4) Delivery of transmitter/purge panels shall be onsite by 18 Feb 2004. Delivery of probes to preinstall on burners shall be coordinated with ABT prior to shipment of the burners.
5) Includes 4 on-site man-days for Air Monitor factory technician startup and training support.

Accuracy:
Accuracy of better than 3% will be assured by:
1) Installing 3 IBAM stainless steel pitot probes (144 total) in each burner on the burner backplate or at optimal locations determined by CFD and experimental wind tunnel testing. During the testing configurations of 2, 3 and 4 probes will be compared for accuracy.
2) Air Monitor performing or subcontracting to Air Flow Sciences or Advanced Combustion CFD modeling of the burner flow to determine the predicted best probe location and to assist ABT in designing the optimum holes in the perforated plate. This work not to exceed $10K. Coordinate with ABT on selecting preferred CFD vendor.
3) Setting up full scale wind tunnel testing with a full scale mockup (the actual burner may be used if available) to verify that there is agreement better than 3% between the air flow in a certified flow nozzle and the pitots in the burner. This will be done at flow velocities similar to those in the burner installation. A chamber simulating IPSC's wind box will be constructed of at least 10 ft x 10 ft x 10 ft with air flowing in from varying directions to simulate real world conditions. Verify 3% accuracy maintained over 3:1 velocity turndown. A test matrix of sleeve damper position, swirler angle, # of probes, probe location will be run for various flowrates.

Customer observations of the air flow testing will be encouraged and supported.
4) Wind tunnel testing shall commence prior to Feb 2004.

Pluggage:
1) Supplied autopurge system will be programmed for a 1 minute high pressure autopurge once per day to remove fly ash particles from the IBAM probes. Within each enclosure the purges will be sequential.
2) Low turbulence and vortexes are expected due to the perforated plate, which will be designed according to CFD models to minimize turbulence and vortexes inside the burners.

Equipment Failure:
1) Should the IBAM pitots or auto purge system become damaged due to elevated temperatures, vibration, pluggage or other unforseen failure mode, Air Monitor will provide a 2 year replacement warranty of all equipment; as long as the burner structure at the IBAM Pitot insertion location has not been damaged also as a result of elevated temperatures.
2) Air Monitor will fabricate replacement pitots once the failure has been identified so they can be on site prior to a planned or forced outage for retro-fit. The new replacement probes will be provided within a timely period within 3 months maximum to meet IPSC's outage windows.
3) The replacement IBAM pitots will carry a renewed 2 year guarantee from the time of installation.

Upon successful installation and performance, IPSC agrees that Air Monitor can use IPSC as a reference and publish the results in a white paper.

ADVANCED BURNER TECHNOLOGIES

SCANNED FYI

271 Route 202/206
P.O. Box 410
Pluckemin, NJ 07978
P 908.470.0470
F 908.470.0479
www.advancedburner.com

SB ORIGINAL

Invoice

DATE	INVOICE #
5/7/2004	A03008-6

BILL TO	SHIP TO
Intermountain Power Service Corporation Attn: Accounts Payable Department 850 West Brush Wellman Road Delta, UT 84624-9546	Intermountain Power Service Corporation Attn: James Nelson 850 West Brush Wellman Road Delta, UT 84624-9546

P.O. NUMBER	TERMS	REP	SHIP	VIA	F.O.B.	PROJECT
04-45606 -007	Upon Receipt		2/18/2004	Best Way	Delta, UT	A03008

QUANTITY	ITEM CODE	DESCRIPTION	PRICE EACH	AMOUNT
1	1	Balance of Professional Liability Premium for period 4/21/04 - 4/30/05	30,000.00	30,000.00

PAYMENT AUTHORIZATION # 203968
WORK RELEASE #
SERVICE CONTRACT # 04-45606
WORK ORDER # 03-96033-0
INVOICE # A03008-6
AMOUNT $ 30,000.00
DATE TO SUBMIT BY ___/___/___

ACCRUED TAX $ 1,725.00

6-9
Sent to Sam
3:00-

VENDOR # 8075 REMIT TO # 2
VOUCHER # 0412035515
AMT PAID $ 30,000.00
CHECK NO 04-266H DUE DATE 6/19/04

MAY 10 20
IPSC ACCOUNTING

Total SB $30,000.00

ACORD CERTIFICATE OF LIABILITY INSURANCE

OP ID NF
ADVAN-3

DATE (MM/DD/YYYY)
05/06/04

PRODUCER

Jacobson, Goldfarb & Scott Inc
960 Holmdel Rd, Building II
Holmdel NJ 07733-0409
Phone: 732-834-9800 Fax: 732-834-0233

THIS CERTIFICATE IS ISSUED AS A MATTER OF INFORMATION ONLY AND CONFERS NO RIGHTS UPON THE CERTIFICATE HOLDER. THIS CERTIFICATE DOES NOT AMEND, EXTEND OR ALTER THE COVERAGE AFFORDED BY THE POLICIES BELOW.

INSURED

Advanced Burner Technologies Corporation
P.O.Box 410
271 Route 202/206
Pluckemin NJ 07978

INSURERS AFFORDING COVERAGE		NAIC #
INSURER A:	Admiral Insurance Company	
INSURER B:	Transcontinental Insurance Co	20486
INSURER C:	St.Paul Fire & Marine Ins Co	
INSURER D:		
INSURER E:		

COVERAGES

THE POLICIES OF INSURANCE LISTED BELOW HAVE BEEN ISSUED TO THE INSURED NAMED ABOVE FOR THE POLICY PERIOD INDICATED. NOTWITHSTANDING ANY REQUIREMENT, TERM OR CONDITION OF ANY CONTRACT OR OTHER DOCUMENT WITH RESPECT TO WHICH THIS CERTIFICATE MAY BE ISSUED OR MAY PERTAIN, THE INSURANCE AFFORDED BY THE POLICIES DESCRIBED HEREIN IS SUBJECT TO ALL THE TERMS, EXCLUSIONS AND CONDITIONS OF SUCH POLICIES AGGREGATE LIMITS SHOWN MAY HAVE BEEN REDUCED BY PAID CLAIMS

INSR LTR	ADD'L INSRD	TYPE OF INSURANCE	POLICY NUMBER	POLICY EFFECTIVE DATE (MM/DD/YY)	POLICY EXPIRATION DATE (MM/DD/YY)	LIMITS	
		GENERAL LIABILITY					
A	X	X COMMERCIAL GENERAL LIABILITY	A03AG16794	04/21/04	04/30/04	EACH OCCURRENCE	$ 2,500,000
		CLAIMS MADE X OCCUR				DAMAGE TO RENTED PREMISES (Ea occurence)	$ 50,000
		X Professional endo	CA000003485-02	04/30/04	04/30/05	MED EXP (Any one person)	$ excluded
						PERSONAL & ADV INJURY	$ 2,500,000
						GENERAL AGGREGATE	$ 2,500,000
		GEN'L AGGREGATE LIMIT APPLIES PER. X POLICY PROJECT LOC				PRODUCTS - COMP/OP AGG	$ 2,500,000
		AUTOMOBILE LIABILITY					
B		X ANY AUTO	2057665092	05/15/03	05/15/04	COMBINED SINGLE LIMIT (Ea accident)	$ 1,000,000
		ALL OWNED AUTOS	2057665092	05/15/04	05/15/05	BODILY INJURY (Per person)	$
		SCHEDULED AUTOS					
		HIRED AUTOS				BODILY INJURY (Per accident)	$
		NON-OWNED AUTOS					
						PROPERTY DAMAGE (Per accident)	$
		GARAGE LIABILITY				AUTO ONLY - EA ACCIDENT	$
		ANY AUTO				OTHER THAN AUTO ONLY. EA ACC	$
						AGG	$
		EXCESS/UMBRELLA LIABILITY				EACH OCCURRENCE	$
		OCCUR CLAIMS MADE				AGGREGATE	$
							$
		DEDUCTIBLE					$
		RETENTION $					$
C		WORKERS COMPENSATION AND EMPLOYERS' LIABILITY	WVA7711150	04/15/04	04/15/05	X WC STATUTORY LIMITS OTHER	
		ANY PROPRIETOR/PARTNER/EXECUTIVE OFFICER/MEMBER EXCLUDED? If yes, describe under SPECIAL PROVISIONS below				E.L. EACH ACCIDENT	$ 1,000,000
						E.L. DISEASE - EA EMPLOYEE	$ 1,000,000
						E.L. DISEASE - POLICY LIMIT	$ 1,000,000
		OTHER					

DESCRIPTION OF OPERATIONS / LOCATIONS / VEHICLES / EXCLUSIONS ADDED BY ENDORSEMENT / SPECIAL PROVISIONS

**Inter-Mountain Power Agency, Inter-Mountain Power Service Corp., City of Los Angeles Department of Water and Power their officers, agents and employees are additional insureds for the activities and operations by the Insured and Insured's subcontractors under and in connection with the Inter Mountain Power Project contract with Insured.

CERTIFICATE HOLDER

INTERMO

Inter-Mountain Power Agency
et.al.**
850 West Brush Wellman Road
Delta UT 84624

CANCELLATION

SHOULD ANY OF THE ABOVE DESCRIBED POLICIES BE CANCELLED BEFORE THE EXPIRATION DATE THEREOF, THE ISSUING INSURER WILL ~~[illegible]~~ MAIL 30 DAYS WRITTEN NOTICE TO THE CERTIFICATE HOLDER NAMED TO THE LEFT, BUT ~~[illegible]~~ SHALL IMPOSE NO OBLIGATION OR LIABILITY OF ANY KIND UPON THE INSURER, ITS AGENTS OR REPRESENTATIVES.

AUTHORIZED REPRESENTATIVE
Nicholas S. Ferrara

RECEIVED
MAY 10 2004
IPSC ACCOUNTING

© ACORD CORPORATION 1988

Vendor Number: 8075
Vendor Name: ADVANCED BURNER TECHNOLOGIES

2 Vouchers (Open/Paid)

	Voucher No	Invoice No	Net Amount	Check / Reference No	Check Date	PO No
1:	0412035515	A03008-6	30000.00	42661	06/09/04	04-45606-7
2:	0409024631	A03008-5	40800.00	41911	03/23/04	04-45606-6
3:	0409024620	A03008-5	817385.00	41791	03/16/04	04-45606-5
4:	0408020706	A03008-4	741365.00	41511	02/12/04	04-45606-4
5:	0406015802	A03008-3	247122.00	40912	12/03/03	04-45606-3
6:	0405013264	A03008-1	30000.00	144364	11/13/03	04-45606-2
7:	0405013310	A03008-2	494244.00	40841	11/05/03	04-45606-2

SELECTIONS ?
Page 1 of 1. 7 records were identified.

```
PURCHASING              PO STATUS INQUIRY - PO DETAIL                    PU4044
    PO Number         04-45606-2   Purchase Priority 4          ROUTINE

    Buyer              23849 BENNETT, N
    Line                 2
    WO Number          03-96033-0           Equip No         2SGA--A
    Crew No             81                  Date Required    11/03/03
    Stock Number       DIRECT               Account No       00-2SGX-502
 1: Item Description   INVOICE NO. A03008-1
                       50% OF PROFESSIONAL LIABILITY PREMIUM
    Requisition Cost
     30,000.00000

    Commodity Code                          Actual Cost      30000.00000
    Unit Measure  PUR  EA  ISS EA           Trade Disc (% $)
    Conversion         1   TO  1            Amount
    Quantity Required  1       1            Result
    Taxable (Y/N)      Y                    Matl at Vendor
    Scheduled Delivery 11/03/03             Std Freight Rate
    Deliver To
 2: General Notes

WHICH ONE (C=CONVERSION, V=VOUCHER, N=NOTES, P=PAY, <RTN>=CONTINUE) ?
D71533 10:09 14 JUN 2004    Intermountain Power Service Corp.   USER.LIVE.DATA
```

Spec. No. _____

PART F - DETAILED SPECIFICATIONS

DIVISION F1 - SPECIAL CONDITIONS

1.0 GENERAL

1.1 This section contains the equipment description, material, and quality assurance requirements for Burner Nozzles purchased under these specifications.

1.2 The burner nozzle described in this specification will be installed in any Intermountain Generating Station (IGS) Babcock and Wilcox (B&W) Dual Register Coal Burner.

2.0 MATERIALS

2.1 Nozzle material shall be in accordance with ASTM A53, A106, and all other applicable sections of the ASTM codes.

2.2 The nozzle shall be made as detailed on IPSC drawing No. 412.

2.3 The vendor shall guarantee the nozzle to be concentric and free of defects upon delivery.

2.4 The flange and nozzle barrel shall be made of SA106 seamless steel, or SA53B seamless steel.

2.5 The nozzle tip shall be either spin cast or shaped using a wide nosing bar and shall have no notches, valleys, or grooves.

2.6 Welding:

2.6.1 Stainless steel tip seam weld shall be:

a. 100 percent penetration
b. 75 degree double V groove weld with 1/16 inch groove face
c. Root pass shall be a Gas Tungsten Arc (TIG) weld with 309 filler
d. Fill in remainder of grooves with stringer welds no wider than 1/4 inch, alternating sides, using 309 stainless steel wire

2.6.2 Dissimilar welds shall be:

a. 100 percent penetration
b. Single V-groove weld, non-symmetrical bevels:

PART F - DETAILED SPECIFICATIONS

1.0 GENERAL

1.1 This section contains the equipment description, material, and quality assurance requirements for burner nozzles purchased for Intermountain Generating Station.

1.2 The burner nozzles provided under this specification shall be designed and fabricated for interchangeable installation in place of any Intermountain Generating Station (IGS) Babcock and Wilcox (B&W) Dual Register Coal Burner.

2.0 MATERIALS

2.1 The nozzle shall be shipped with ceramic tiles and alloy tip fully installed. The deflectors and diffusers shall be shipped separately for installation at IGS. The windbox, sectioned seal plate, where provided by the nozzle manufacturer, shall also be shipped loose for attachment to the nozzle, following installation at IGS.

2.2 Nozzle material shall be in accordance with ASTM A53, A106, and all other applicable sections of the ASTM codes.

2.3 The nozzle shall be constructed as detailed on IPSC Drawing No. 98-15684-00, Modified Burner Details and Assembly. Any discrepancies between this specification, the referenced codes and manufacturer standard practice shall be submitted to IPSC for direction.

2.4 The flange and nozzle barrel shall be made of SA106 seamless steel, or SA53B seamless steel. The nozzle flange (upstream end of nozzle) shall be provided with 20 each 1-1/8" diameter holes equally spaced on 27-1/2 inch bolt circle. The flange shall be 1 inch thick plate of 30 inch O.D. by 22-1/16 inch I.D..

2.5 The ceramic lined portion of the nozzle shall be 4 feet long with a maximum outside diameter of 22-5/8 inches. The ceramic lining shall begin at a point 6 inches upstream of the diffuser upstream face and continue a distance of 4 feet downstream.

2.6 The surface of the installed ceramic lining shall be flush with the adjacent nozzle surface, true and even along the entire 4 foot length and well secured. The ceramic shall not be solely dependant upon an adhesive bond to the nozzle but shall be physically keyed in position.

2.7 The nozzle tip shall be seamless material with no notches, valleys, or grooves. The nozzle shall be designed for continuous service in a flue gas environment up to 2000 Fahrenheit without incurring measurable creep or oxidation.

2.8 The diffusers and deflectors shall be B&W standard design DRB conical diffuser and deflector set fabricated of nitride bonded silicon carbide. Deflectors and diffusers shall be installed prior to delivery.

2.9 Welding:

2.9.1 Circumferential Nozzle Tip Weld (Dissimilar Metal Weld):

a. 100 percent penetration
b. Single V-groove weld, non-symmetrical bevels:
   1. 37-½ degrees on the alloy
   2. 60 degrees on the carbon steel
   3. 1/16 inch groove face, 1/16 inch groove space
c. First pass shall be a Gas Tungsten Arc (TIG) weld with ENiCrFe-3 filler.
d. All other passes shall be SMAW with ERNiCrFe-3 rod.

2.9.2 All nozzle welds shall have no cracks, lands, grooves, or ledges, and shall be blended/ground smooth to the nozzle wall.

2.10 The nozzle shall be straight and true throughout the entire length to within 1/8 inch. The nozzle shall be straight and true throughout the ceramic lined section to within 1/16 inch.

2.11 Windbox seal plate shall be shipped loose in two sections per plate. Seal plate shall be 3/8 inch thick, 22-3/4 inches I.D. by 28 inches O.D.

3.0 <u>QUALITY ASSURANCE</u>

3.1 The vendor shall implement a Quality Assurance Program, complete with documentation verifying that each nozzle complies with the requirements of this specification. These documents shall be provided to the owner upon request.

3.2 The manufacturer shall maintain continuous contact with IPSC throughout the manufacturing process to allow for coordination of IPSC required quality assurance data and personnel visiting the manufacturer's facility.

POWER & INDUSTRIAL
450 Millers Run Road, Morgan, Pennsylvania 15064

412.221.7116
1.800.676.7116
Fax 412.221.8656

October 10, 1997

Intermountain Power Agency
Intermountain Project
850 W. Brush Wellman Road
Delta, UT 84624

Attention: Jim Nelson

Subject: Burner Replacement Parts
P&I Quote Q97-564-25 REV 2

Dear Jim:

Per our recent proposal, P&I Quote #Q97-564-03 REV 1, the coal nozzles have been quoted with a single flange to be bolted to the burner elbow. Please be advised of the following:

48- Fabricated coal nozzle, 22" OD x 21" ID x 10' 5" OAL with 33" centrifugally cast PI-2000 tips. The first 4' of the coal nozzle will have a ½" ceramic lining with conical diffuser mounting pads and coal deflector mounting pads, 22-5/8" OD ceramic lined section, 21" I.D.

Price: ..... $3,690.00 each

- Reduce ceramic lining from 4' to 3'.

  Price reduction: ..... $100.00 each nozzle

- 5% discount applies only to the conical diffuser and coal deflector when bought in conjunction with above coal nozzle.

- Adder for supplying two (2) sets of coal deflector mounting pads allowing you to rotate the coal nozzle 180°. This is not a recommended solution.

  Price: ..... $200.00 each nozzle

Delivery: 10-12 Weeks
F.O. B.: SPFC; Shipping Point Freight Collect
Terms: Net 30

48- Nitride Bonded Silicon Carbide Conical Diffusers with Mounting Clips for 21" ID coal nozzle.

Price: $1,530.00

NOTE: 5% discount if bought with either of the above quoted coal nozzles.

Delivery: 12-14 Weeks
F.O.B.: SPFC; Shipping Point Freight Collect

48- Nitride Bonded Silicon Carbide Coal Deflectors with Mounting Bolts.

Price: . . . . . $300.00 each

NOTE: 5% discount if bought with either of the above quoted coal nozzles.

Delivery: 12-14 Weeks
F.O.B.: SPFC; Shipping Point Freight Collect

The alumina lined coal nozzle with PI-2000 tips will easily fit into your 21" ID air register sleeve and will give you the best wear life possible.

Thank you for your valued business. Should you have any questions or require additional information, please contact Rick Day of Process Engineered Systems (303-366-8504) or me at your convenience.

Sincerely yours,

Lawrence G. Shekell

LGS:nas
cc: Rick Day

PART F - DETAILED SPECIFICATIONS

DIVISION F1 - SPECIAL CONDITIONS

1.0 GENERAL

1.1 This section contains the equipment description, material, and quality assurance requirements for Burner Stabilizers purchased under these specifications.

1.2 The burner stabilizer described in this specification will be installed on any Intermountain Generating Station (IGS) Babcock and Wilcox (B&W) Dual Register Coal Burner.

2.0 MATERIALS

2.1 All stabilizer parts and components shall be made of 310 stainless steel.

2.1.1 Stabilizer material shall be in accordance with ASTM A370, ASTM A480/A480M, and all other applicable sections of the ASTM codes.

2.2 The stabilizer shall be made according to drawings supported by RJM Corporation part number IPP-SWR40-CW and IPP-SWR40-CCW.

2.2.1 All stabilizer design specifications and engineering calculations shall be the same as those implemented in the **IGS Unit 2** burner stabilizer design.

2.3 The stabilizers shall have the cutouts and stabilizer dimensions on the attached drawing detail.

3.0 WELDING

3.1 All welds shall be in accordance with AWS D1.1.

4.0 QUALITY ASSURANCE

4.1 The vendor shall implement a Quality Assurance Program, complete with documentation verifying that each stabilizer complies with the requirements of this specification. These documents shall be provided to the owner upon request.

5.0 SHIPPING

5.1 Stabilizers shall be shipped banded securely to wood pallets.

DISCLOSURE NOTICES:
1. THE INFORMATION CONTAINED IN THIS DRAWING IS THE SOLE PROPERTY OF ADVANCED BURNER TECHNOLOGIES. ANY REPRODUCTION IN PART OR IN WHOLE WITHOUT THE WRITTEN PERMISSION OF ADVANCED BURNER TECHNOLOGIES IS PROHIBITED.
2. THE STRUCTURE AND OPERATION OF OPTI-FLOW FUEL DISTRIBUTION SYSTEM AND DUAL REGISTERS ARE SUBJECT OF ONE OR MORE U.S. PATENT APPLICATIONS.

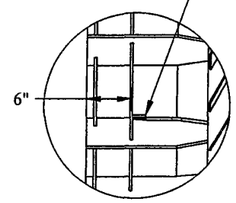

DETAIL D
SCALE 1 : 12
TIP THERMOCOUPLE LOCATION

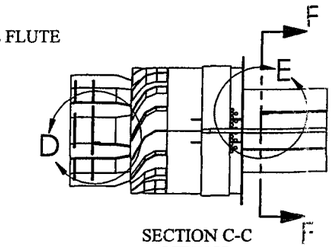

SECTION C-C
VIEW IS
03008-400-A00-D0
ONLY

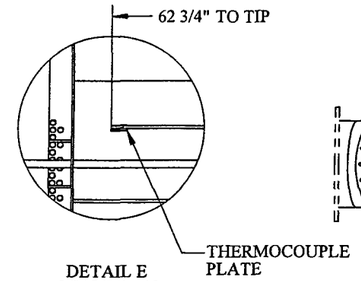

DETAIL E
SCALE 1 : 12
BODY THERMOCOUPLE LOCATION

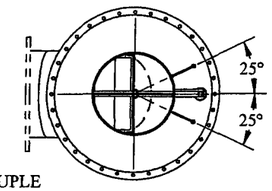

SECTION F-F

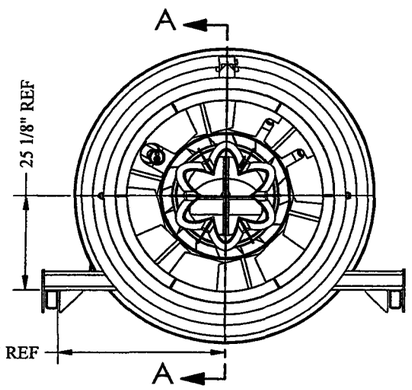

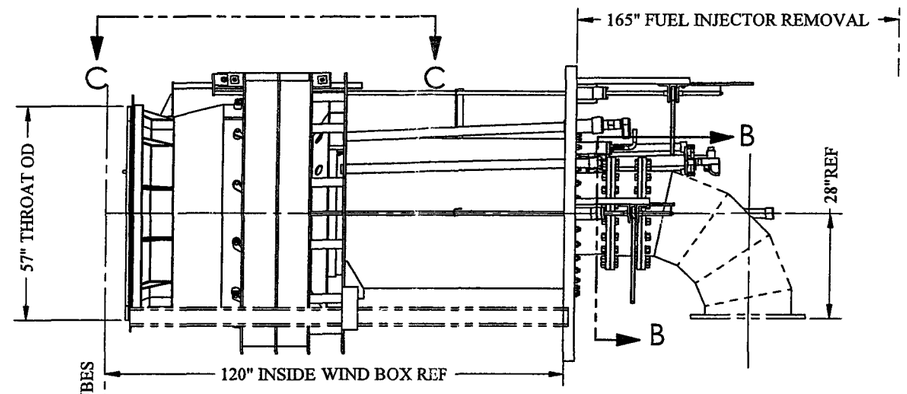

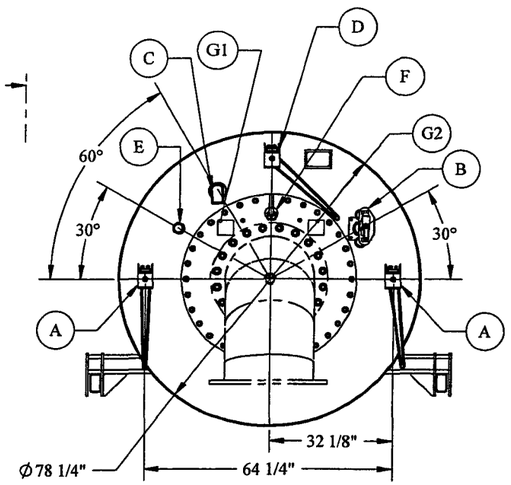

C.C.W. SHOWN
C.W. OPPOSITE HAND

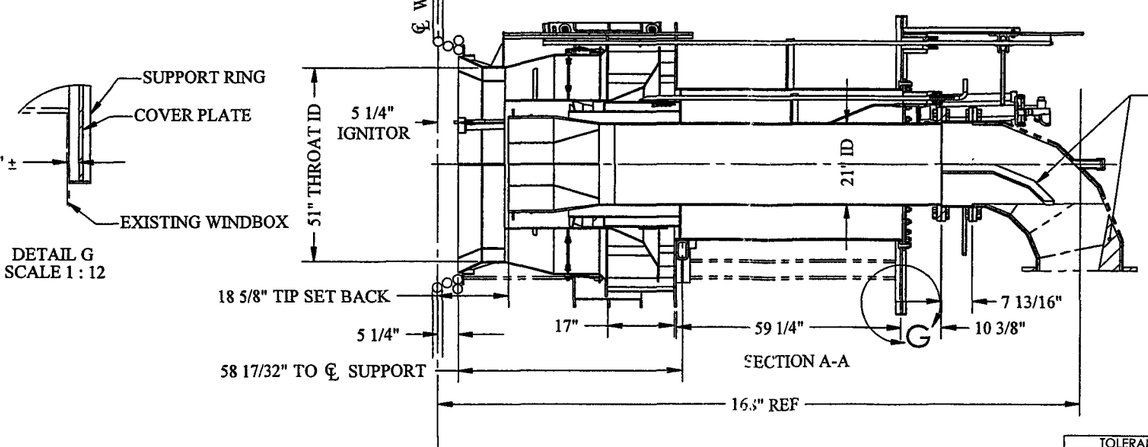

DETAIL G
SCALE 1 : 12

SECTION A-A

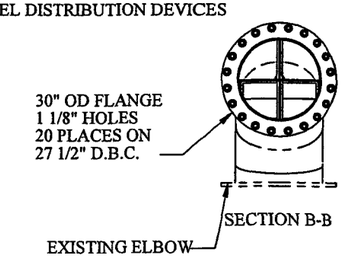

SECTION B-B

ITEM	DESCRIPTION	OPERATION	STROKE
A	SPIN VANE DRIVE	IN TO OPEN	5 3/4"
B	EXISTING OIL IGNITOR		
C	ABB FIBER OPTIC FLAME SCANNER		
D	DAMPER DRIVE	IN TO OPEN	16"
E	SIGHT TUBE		
F	INNER AIR ZONE DAMPER	PUSH TO OPEN	6"
G1	TIP THERMOCOUPLE JUNCTION BOX		
G2	BODY THERMOCOUPLE JUNCTION BOX		

CONTRACT NO.	PART NO.	QUANTITY
A03008	03008-100-A00-D0 CW	24
A03008	03008-100-A00-D0 CCW	24

EST. WEIGHT: 8296.51 lb.
MATERIAL:
SIZE:
TYPE:
ALL DIMENSIONS ARE IN INCHES UNLESS OTHERWISE NOTED

CUSTOMER NAME	PLANT NAME	UNIT
I.P.S.C.	IGS	2

TOLERANCES UNLESS SPECIFIED

	MACHINE PARTS	WELD FABRICATED PARTS
UP TO 6" INCL.	±0.016"	±0.03"
OVER 6" TO 12" INCL.	±0.03"	±0.06"
OVER 12" TO 24" INC.	±0.05"	±0.09"
OVER 24"	±0.06"	±0.125"

ANGLES=±0° 30'
SURFACE ROUGHNESS NOT EXCEED 125
BREAK SHARP CORNERS
DO NOT SCALE PRINT

CAD GENERATED DRAWING
DO NOT MANUALLY UPDATE

	NAME	DATE
DRAWN	RJ	10/27/2003
CHECKED		
ENG APPR.		
MFG APPR.		
Q.A.		

NO.	DATE	REMARKS	BY

ADVANCED BURNER TECHNOLOGIES

OPTI-FLOW BURNER
IGS UNIT 3
GENERAL ARRANGEMENT

SIZE C | DWG. NO 03008-100-A00-D0 | REV
SCALE 1:24 | SHEET 1 OF 1

IP7_032380

DISCLOSURE NOTICES:
1. THE INFORMATION CONTAINED IN THIS DRAWING IS THE SOLE PROPERTY OF ADVANCE BURNER TECHNOLOGIES. ANY REPRODUCTION IN PART OR WHOLE WITHOUT THE WRITTEN PERMISSION OF ADVANCE BURNER TECHNOLOGIES IS PROHIBITED.
2. THE STRUCTURE AND OPERATION OPTI-FLOW® FUEL DISTRIBUTION SYSTEM AND DUAL REGISTER ARE SUBJECT OF ONE OR MORE U.S. PATENT APPLICATIONS.

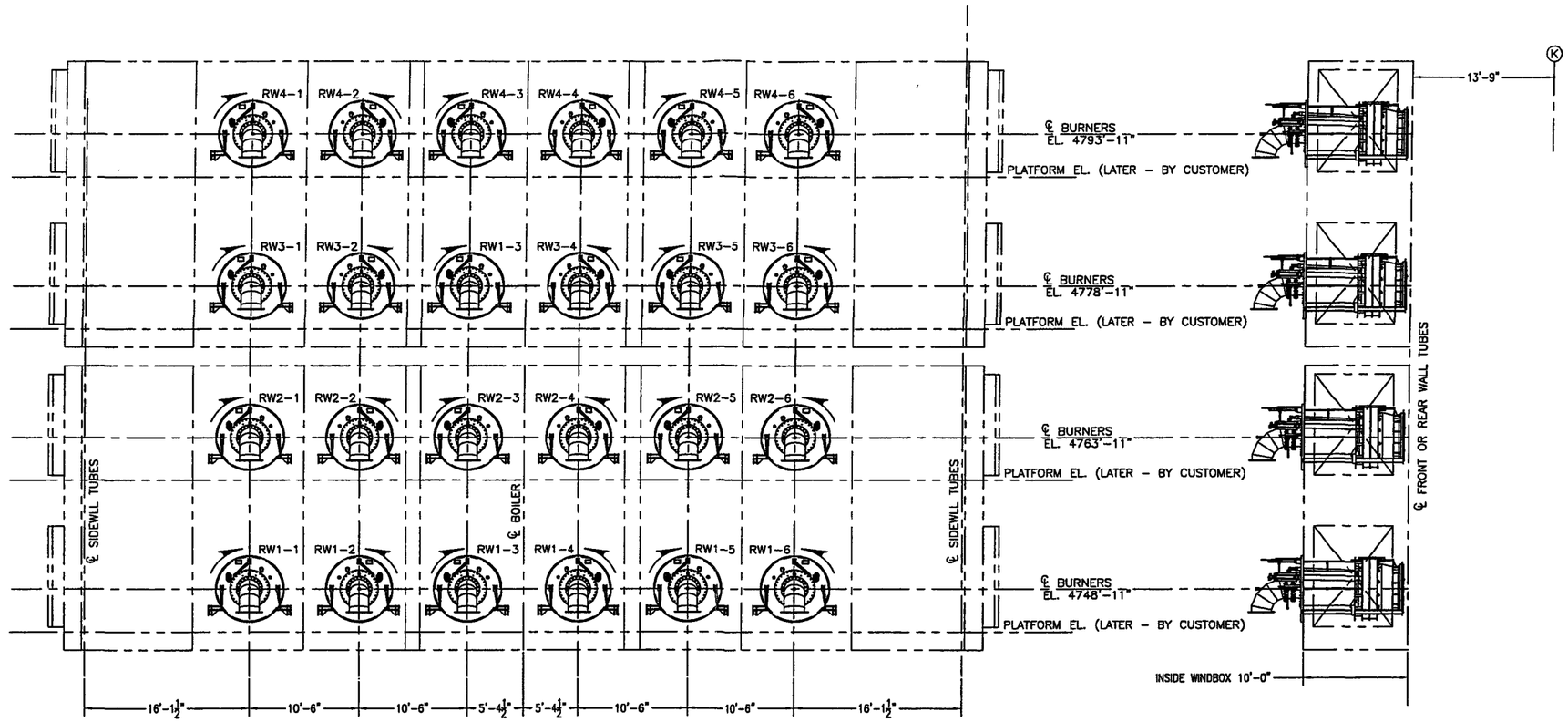

REAR WALL BURNER ARRAMGMENT

NOTES:
1. CUSTOMER TO SUPPLY BURNER NUMBERS.
2. CUSTOMER TO SUPPLY DRAWING TO SHOW ELBOW ORIENTATIONS.
3. CUSTOMER TO SUPPLY PLATFORM ELEVATIONS.

MATERIAL.	EST WEIGHT.		
SIZE:	ALL DIMENSIONS ARE IN INCHES UNLESS OTHERWISE NOTED		
TYPE:	BREAK SHARP CORNERS		
	DO NOT SCALE PRINT		
CUSTOMER NAME	PLANT NAME	UNIT	
I.P.S.C.	IGS	2	

NO.	DATE	REMARKS	BY
		REVISIONS	

ADVANCED BURNER TECHNOLOGIES CORP.

OPTI FLOW BURNER
IGS UNIT 2
GENERAL ARRANGEMENTS RW

RJ 10/21/2003

CUSTOMER NUMBER 03008 — FILE NUMBER

SIZE E — DWG NO. 03008-100-A01-RW — REV.

IP7_032381

DISCLOSURE NOTICES:
1. THE INFORMATION CONTAINED IN THIS DRAWING IS THE SOLE PROPERTY OF ADVANCE BURNER TECHNOLOGIES. ANY REPRODUCTION IN PART OR WHOLE WITHOUT THE WRITTEN PERMISSION OF ADVANCE BURNER TECHNOLOGIES IS PROHIBITED.
2. THE STRUCTURE AND OPERATION OPTI-FLOW® FUEL DISTRIBUTION SYSTEM AND DUAL REGISTER ARE SUBJECT OF ONE OR MORE U.S. PATENT APPLICATIONS.

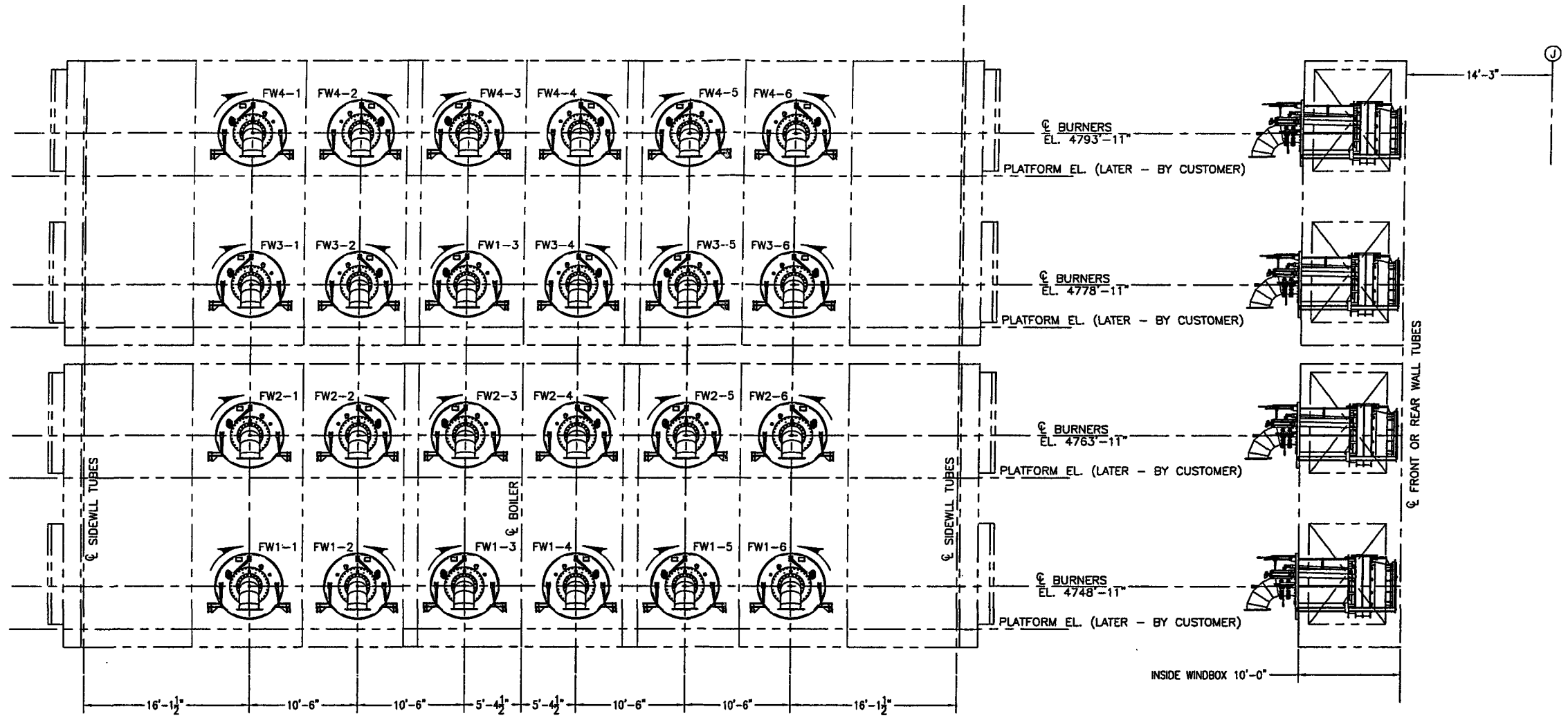

FRONT WALL BURNER ARRAMGMENT

NOTES:
1. CUSTOMER TO SUPPLY BURNER NUMBERS.
2. CUSTOMER TO SUPPLY DRAWING TO SHOW ELBOW ORIENTATIONS.
3. CUSTOMER TO SUPPLY PLATFORM ELEVATIONS.

NO.	DATE	REMARKS	BY

REVISIONS

ADVANCED BURNER TECHNOLOGIES CORP.

MATERIAL:	EST WEIGHT:	
SIZE:	ALL DIMENSIONS ARE IN INCHES UNLESS OTHERWISE NOTED	
TYPE:	BREAK SHARP CORNERS	
	DO NOT SCALE PRINT	
CUSTOMER NAME	PLANT NAME	UNIT
I.P.S.C.	IGS	2

RJ 10/24/2005

OPTI FLOW BURNER
IGS UNIT 2
GENERAL ARRANGEMENTS FW

03008-100-A01-FW

E

IP7_032382

INTERMOUNTAIN POWER SERVICE CORPORATION

CONTRACT 04-45606

and

SPECIFICATIONS 45606

for

UNIT 2 LOW NOx BURNERS

CONTRACT ISSUED TO:

ADVANCED BURNER TECHNOLOGIES
350 MAIN STREET, SUITE 5
BEDMINSTER, NJ 07921

CONTRACT ADMINISTRATOR: JAMES NELSON

BUYER: NANCY C. BENNETT

850 West Brush Wellman Road, Delta, Utah 84624 / Telephone: (435) 864-4414 / FAX: (435) 864-6670 / Fed. I.D. #87-0388573

Contract No. 04-45606

CONTRACT AGREEMENT

THIS CONTRACT AGREEMENT, entered into this 17th day of September 2003, between the **INTERMOUNTAIN POWER SERVICE CORPORATION** (IPSC), a nonprofit organization under contract to the Intermountain Power Agency (IPA), a political subdivision of the state of Utah, organized and existing under the Interlocal Co-Operation Act, Title 11, Chapter 13, Utah Code Annotated 1953, as amended, and **Advanced Burner Technologies (ABT)**, a Corporation, with its principal office in Bedminster, New Jersey, hereinafter called the (Contractor),

WHEREAS, IPSC has prepared specifications and other Contract Documents for **Unit 2 Low NOx Burners** as detailed in the Contract Documents (the Work), and has requested proposals from bidders to perform the Work;

WHEREAS, Contractor has submitted to IPSC a Proposal in accordance with the terms of this Contract Agreement; and

WHEREAS, IPSC has determined and declared Contractor to be the lowest and best, regular responsible bidder for the said Work, subject to execution of this Contract Agreement;

AGREEMENTS: In consideration of the compensation to be paid to Contractor, and of the mutual terms and conditions contained herein, IPSC for itself and its successors, and Contractor for itself and its permitted successors and assigns, hereby agree as follows:

ARTICLE I: Contractor shall perform in accordance with the provisions of this Contract Agreement, including the Contract Documents identified in Article III hereof.

ARTICLE II: Contractor will be paid for its performance under this Contract Agreement in accordance with the provisions of the Contract Documents, including those provisions in the Article entitled "Limitation of Liability; Responsible Party" in Part E, Division E1, General Conditions.

IP7_032384

ARTICLE III: The term Contract Documents means and includes all of the following:

PART	DIVISION	TITLE
A	A1	Notice Inviting Proposals
B	B1	Instructions to Bidder
	B2	Supplementary Instructions to Bidders
C		Bidding Documents
	C1	Proposal, No. Q03013
	C1	Labor, Material, and Performance Bond
	C2	Proposal Schedule
	C3	Additional Bid Information
	C4	Comments, Exceptions, Additions, and Cost Summary
	C5	Contractor's Exceptions
D	D1	Contract Documents Description
E	E1	General Conditions
	E2	Additional General Conditions
F		Detailed Specifications
	F1	Special Conditions
	F2	Detailed Requirements

Attachments

Attachment 1 - Scanner, Lighter and Fuel Specifications, and Outline Drawings
Attachment 2 - Fuel Oil Analysis Report
Attachment 3 - General Coal Properties
Attachment 4 - FD Fan Performance
Attachment 5 - PA Fan Performance
Attachment 6 - Existing Burner General Layout
Attachment 7 - Secondary Air Duct and Windbox Drawings
Attachment 8 - As Fired Coal Sample Analyses - IPSC Fuels Lab

The foregoing Contract Documents, and the documents identified in Part D "Contract Documents Description," are an integral part of this Contract Agreement and are hereby incorporated as part of this Contract Agreement as if fully restated herein. The above listed Contract Documents shall prevail over other information submitted with Contractor's Proposal.

ARTICLE IV: This Contract Agreement, including the Contract Documents, constitutes the entire Agreement of the parties hereto with respect to the Work and other subjects addressed herein, and supersedes all prior oral communications or written documents.

WHEREFORE, IPSC and Contractor execute this Contract Agreement as of the date stated in the first introductory paragraph.

INTERMOUNTAIN POWER SERVICE CORPORATION
850 West Brush Wellman Road
Delta, UT 84624-9546

By: George W Cross
George W. Cross
President and Chief Operations Officer

9/16/03
Date

ADVANCED BURNER TECHNOLOGIES
350 Main Street, Suite 5
Bedminster, NJ 07921

By: [illegible]

Title: President

Sept 12, 2003
Date

TABLE OF CONTENTS

SPECIFICATIONS

PART	DIV	TITLE	PAGE NUMBER
A	A1	Notice Inviting Proposals	A1-1
B	B1	Instructions to Bidders	B1-1 thru B1-2
	B2	Supplementary Instructions to Bidders	B2-1 thru B2-4
C		Bidding Documents	
	C1	Bidder's Bond	C1-1
	C1	Proposal	C1-2
	C1	Labor, Material, and Performance Bond	C1-3 thru C1-4
	C2	Proposal Schedule	C2-1 thru C2-3
	C3	Additional Bid Information	C3-1 thru C3-3
D	D1	Contract Documents Description	D1-1
E	E1	General Conditions	E1-1 thru E1-8
	E2	Additional General Conditions	E2-1 thru E2-2
F		Detailed Specifications	
	F1	Special Conditions	F1-1 thru F1-5
	F2	Detailed Requirements	F2-1 thru F2-6

Attachments

Attachment 1 - Scanner, Lighter and Fuel Specifications, and Outline Drawings
Attachment 2 - Fuel Oil Analysis Report
Attachment 3 - General Coal Properties
Attachment 4 - FD Fan Performance
Attachment 5 - PA Fan Performance
Attachment 6 - Existing Burner General Layout
Attachment 7 - Secondary Air Duct and Windbox Drawings
Attachment 8 - As Fired Coal Sample Analyses - IPSC Fuels Lab

PART A - DIVISION A1

NOTICE INVITING PROPOSALS

The Intermountain Power Service Corporation (IPSC) invites sealed bids for furnishing and delivering **Unit 2 Low NOx Burners** in accordance with **Specifications 45606**, available in the Purchasing Section, Intermountain Power Service Corporation, 850 West Brush Wellman Road, Delta, Utah 84624-9546.

Proposals shall be submitted on IPSC's bidding forms. All Proposals shall be filed with the Buyer at the above address on or before **August 25, 2003**.

Each Proposal shall be accompanied by a certified or cashier's check payable to Intermountain Power Agency (IPA), or a Surety Bond payable to IPA, IPSC, and the City of Los Angeles Department of Water and Power (LADWP) in the amount of $50,000 as a guarantee that the bidder shall execute the proposed Contract Agreement if awarded.

Proposals shall be subject to acceptance within, and irrevocable for, a period of one hundred and twenty (120) calendar days after date of bid opening.

IPSC reserves the right to reject any and all Proposals.

Contractor shall furnish a Performance Bond equal to 10 percent of the estimated Contract amount, and shall keep the Performance Bond in place at all times thereafter until all obligations under the Contract have been discharged.

In the performance of any contract awarded, the bidder shall not discriminate in employment practices against any employee or applicant for employment because of race, religion, national origin, ancestry, sex, age, or physical disability.

Dated: Aug. 8, 2003

Nancy C. Bennett, Buyer
Intermountain Power Service Corporation

PART B - DIVISION B1

INSTRUCTIONS TO BIDDERS

1. Form, Signature, and Delivery of the Proposals: The bidder's Proposal shall be made on the yellow copy of the Bidding Documents. The Specifications printed on white paper shall be retained by the bidder.

   The bidder's name, address, and the date shall be stated in the Proposal. The Proposal shall be signed by the person authorized to bind the bidder.

   The Proposal shall be enclosed in a sealed envelope, plainly marked in the upper left-hand corner with the name and address of the bidder. The envelope shall bear the words "Proposal for," followed by the Specification Number, the title of the Specifications, and the date and hour of bid opening.

   If the Proposal is mailed, it shall be addressed as follows:

   Purchasing Section
   Intermountain Power Service Corporation
   850 West Brush Wellman Road
   Delta, UT 84624-9546

   If the Proposal is sent by messenger, it shall be delivered to the Administration Building, Intermountain Power Service Corporation, 850 West Brush Wellman Road, Delta, Utah.

2. Interpretations and Addenda: Should a bidder find discrepancies or omissions in the plans, specifications, or other documents, or should there be doubt as to their true meaning, the bidder shall submit to the Buyer a written request for an interpretation or clarification thereof. A request for addenda, interpretation, or clarification shall be delivered to the Buyer marked "Request for Interpretation" and must be received by the Buyer in time to permit a reasonable response before the date of opening bids. Any interpretation of, or change in the documents will be made only by addendum issued to each person to whom Specifications have been issued and will become a part of any contract awarded. IPSC will not be responsible for or bound by any other explanations or interpretations.

3. Correspondence: All inquiries or correspondence to IPSC prior to award of Contract shall be addressed to the Buyer.

4. Changes or Alternatives: The bidder shall not change any wording in the documents. Any explanations or alternatives offered shall be submitted in a letter attached to the front of the Bidding Documents. Alternatives which do not substantially comply with IPSC's Specifications cannot be considered. Language of negation or limitation of any rights, remedies, or warranties provided by law will not be considered part of the Proposal. Bids offered subject to conditions or limitations may be rejected.

5. Specified Materials or Equivalent: Whenever any particular material or process is specified by a patent or proprietary name, by a trade or brand name, of a manufacturer, such wording is used for the purpose of describing the material or process, fixing the standard of quality required, and shall be deemed to be followed by the words "or equivalent." The bidder may offer any material or process which shall be the equivalent of that so specified, but the bidder must identify the equivalent offered.

6. Language: Everything submitted by the bidder shall be written in the English language.

7. Sales or Use Taxes: Prices quoted by the bidder shall not include any applicable sales or use taxes or Federal Excise Taxes.

8. Duties: Prices quoted by the bidder shall include all applicable duties.

9. Award of Contract: Award of Contract will be made to the lowest and best, regular responsible bidder. The determination as to which is the lowest and best, regular responsible bidder may be made on the basis of the lowest ultimate cost of the services, materials, equipment, or other Work in place and use. The right is reserved to reject any or all Proposals.

   Within thirty (30) calendar days after the date of award of Contract, Contractor shall sign the Contract supplied by IPSC. The Contract will be effective upon execution by IPSC. Award of Contract is subject to execution of IPSC's form of Contract Agreement and other Contract Documents.

10. Comparison of Bids: For the purpose of comparing bids, it will be assumed that the quantity of forty-eight (48) burners and scanners will be required.

11. Bidder's Bond: The Proposal shall be accompanied by a certified check or a cashier's check issued by a responsible bank, payable in the state of Utah to the order of Intermountain Power Agency, in an amount of $50,000. A surety bond payable to IPA, IPSC, and LADWP in a like amount will be accepted in lieu of a check.

12. Performance Bond: Within thirty (30) calendar days after date of award of Contract, Contractor shall furnish a Performance Bond, payable to IPA, IPSC, and LADWP equal to 10 percent of the estimated amount of the Contract.

13. Calculation of the Bonds: The estimated amount of the Proposal for the Bidder's Bond, or of the Contract for the Performance Bond, will be considered to be the price, including freight charges, quoted by the bidder in the Proposal Schedule, times the assumed quantity under the Comparison of Bids in Article 10 of this Division.

IP7_032390

PART B - DIVISION B2

SUPPLEMENTARY INSTRUCTIONS TO BIDDERS

1. Required Delivery and Installation Schedule: The Unit 2 outage is currently scheduled to begin Saturday, February 28, 2004. The target completion date for returning all systems to IPSC Operations control is Wednesday, March 24, 2004. Each bidder shall prepare and provide, with each bid package, a proposed installation plan showing project progress on a daily basis beginning with initial equipment delivery and ending with job site clean up and exit.

   a. All bidders shall provide a guaranteed installation schedule as part of the proposed installation plan submitted with each bid package.

   b. The proposed installation plan shall be developed to ensure completion of all Work inside the boiler within a maximum of twenty-six (26) days. This twenty-six (26) day period shall include four (4) days for installation of the boiler internal scaffolding by a separate contractor and three (3) days for removal of the same.

   c. Work not requiring the unit to be off-line, such as mobilization, staging, boiler enclosure structural access work, demobilization, etc., shall be clearly identified on the proposed installation plan and can be coordinated outside this outage window, with approval from the IPSC Contract Administrator. Mobilization into the burner levels of the boiler enclosure, as well as material and equipment access and removal will require careful coordination due to the volume of work ongoing throughout the boiler. Crane access will require close coordination.

   d. The bidders shall provide a schedule of costs associated with an IPSC scheduled delay of the outage start date in one (1) week increments up to one (1) month. These costs shall be based on notification from IPSC one (1) month prior to the scheduled outage start dates. A second schedule of costs shall be based on notification from IPSC one (1) week prior to the scheduled outage start dates.

   e. Unless otherwise noted in these Specifications, IPSC facilities and equipment shall not be used in support of this Work. To prevent delays, caused by equipment breakdown, Contractor shall provide spare tools and equipment at IPP job site in reasonable quantities in anticipation of equipment failures.

   f. The proposed installation plan, submitted with the bid package, shall be the basis for development of the approved installation plan forming a part of the eventual Contract governing this Work. The approved installation plan shall be used as the basis for instituting mid-outage resource corrections and for calculating any liquidated damage charges associated with completion of the Scope of Work.

g. The proposed installation plan shall include detailed information regarding each task within the Contract Scope of Work, including:

DETAILED INFORMATION FOR PROPOSED INSTALLATION PLAN
Equipment and Material Delivery
Equipment Mobilization and Assembly
Manpower Loading Throughout Contract
Windbox Access Provisions Complete
Burner Removal By Row
Interface Modifications Complete (If Any)
Burners in Position
Burners Welded Out
Burner Flow and Temperature Instrumentation Complete
Windbox Restoration Complete
External Instrumentation Boxes Mounted, Wired, and Tubed
Windbox Insulation Complete
Material and Equipment Removed From Boiler and Stowed
Area Cleaned and Restored

h. The proposed installation plan, to be included as part of the submitted bid, shall include estimates of all required on-site services, with clear identification of each request for service to be provided by IPSC. The estimates shall include power service requirements for running all electrical equipment and compressed air requirements. Authorization for connection to and use of requested power, compressed air, or other on-site services must be coordinated and approved by the IPSC Contract Administrator.

i. At least two (2) months prior to mobilization to IPP plant site, Contractor shall provide a detailed material "laydown plan" for coordination of area utilization and access. The laydown plan shall address staging and temporary storage requirements for all associated materials and equipment in order to minimize interference with ongoing plant operations and outage Work.

This laydown plan shall be submitted to and approved by the IPSC Contract Administrator prior to receiving any Contract materials, equipment, or craft personnel on site for the outage Work.

2. Incentives and Liquidation Damage: For incomplete delivery to the IPP job site by 12:00 pm, noon, Mountain Standard Time (MST) on Monday, February 23, 2004, Contractor shall be assessed 1 percent in liquidated damages calculated as a percent of the Contract price.

   ABT anticipates shipments to the IPP job site will begin in early January, prior to installation contractor arrival on site. In case of early shipments, IPSC will be responsible for off loading and storage of equipment.

For delivery of all burner and scanner components to the IPP job site at least three (3) weeks ahead of the Unit 2 outage start date identified above, the bidder will be awarded a 1 percent bonus calculated as a percent of the Contract price.

3. Applicable Codes and Standards: The Work performed within these Specifications shall adhere to the applicable portions of the latest published revision of the following codes and standards:

CODES AND STANDARDS
ASME - American Society of Mechanical Engineers
NBIC - National Board Inspection Code
AWS - American Welding Society
OSHA - Occupational Safety and Health Administration
ASNT - American Society for Nondestructive Testing
Contractor's Utah Jurisdiction Approved R Stamp Program

4. Safety: Contractor shall be responsible to provide and manage an acceptable safety program.

   a. Contractor shall provide a full-time safety representative. The safety representative shall act as the point of contact for all safety-related issues and may be assigned additional duties.

   b. Contractor shall provide copies of written safety policies/plans to the IPSC Contract Administrator one (1) month prior to beginning Work, including, but not

limited to, Respiratory Protection, Confined Space, and Hazardous Communications.

c. Prior to flame cutting or welding in any location, Contractor shall first obtain a Hot Work Permit. The permit will be coordinated by the IPSC Contract Administrator or designee. The permit lists mandatory safety precautions, which shall be taken before, during, and after hot work.

d. Contractor shall ensure its employees perform Work in accordance with all applicable federal, state, and local safety and health regulations. The IPSC Safety Section personnel will periodically monitor the Work site. If violations are noted, the violations will be reported to Contractor's on-site supervisor and the IPSC Contract Administrator for appropriate action.

5. Flame Scanning System Training: The bidder shall include provisions for two (2) on-site training classes for a duration of not less than one (1) ten-hour day each. Classes shall be conducted with training sets of the installed hardware to allow for full simulation of the calibration, tuning, diagnostics, and repair procedures. Classes shall be conducted for up to thirty (30) people per class.

6. Documentation: Nine (9) copies of all hard-copy documentation shall be supplied for all equipment supplied under the Contract. Where possible, electronic documentation may be provided, in addition to or in lieu of, hard-copy documentation. Electronic documents shall be text .pdf, picture .jpg, or vector .dwg files.

Documentation provided by Contractor shall include, but not be limited to, the following as applicable:

DOCUMENTATION
Equipment Description
Dimensional Drawings
Installation Instructions
Operating Instructions
Maintenance and Trouble-Shooting Guidelines
Parts List and Bill of Materials
Recommended Spare Parts

PART C - DIVISION C1

BIDDING DOCUMENTS

BIDDER'S BOND

(Not necessary when certified or cashier's check accompanies bid. See below*.)

SURETY BOND

We, the undersigned Principal and Surety, acknowledge ourselves jointly and severally bound to Intermountain Power Agency (IPA) and Intermountain Power Service Corporation (IPSC) of the state of Utah, and the City of Los Angeles Department of Water and Power (LADWP), in the sum of _____ Dollars ($_____), to be paid to IPA if the attached Proposal shall be accepted and the proposed Contract awarded to said bidder, and said bidder shall fail to execute the Contract and Bond for the faithful performance thereof; otherwise this obligation to be void.

Dated: August 22, 20 03

Firm Name: Advanced Burner Technologies Corp.

350 Main Street, Suite 5, Bedminster, NJ 07921NJ

By: _____
(Signature)**

(Surety): _____

By: _____
(Signature)

*When the bidder is submitting a check in lieu of a Bond, the check must be made payable to Intermountain Power Agency, must either be certified by a responsible bank or be a cashier's check issued by a responsible bank, and must be payable in the state of Utah.

If check is submitted herewith, state check number 16010201 and amount $50,000.00

**See Form, Signature, and Delivery of the Proposals, Division B1

NOTE: All signatures above must be written in ink.

PROPOSAL

The undersigned hereby proposes to furnish and deliver **Unit 2 Low NOx Burners** to the Intermountain Power Service Corporation in accordance with **Specifications 45606**.

The undersigned agrees, upon the acceptance of this Proposal: (a) to execute IPSC's form of Contract (including the Contract Agreement and other Contract Documents identified in said Specifications) for furnishing and delivering the items and services embraced in the accepted Proposal, (b) to perform its obligations under the Contract at the prices stated in the accompanying Proposal Schedule, and (c) to furnish a Performance Bond* conditioned upon the faithful performance of the Contract.

The undersigned furthermore agrees that, in case of failure to execute such Contract Agreement and provide the necessary Performance Bond, the check or Bidder's Bond accompanying this Proposal, and the monies payable thereon, shall be forfeited to and remain the property of Intermountain Power Agency.

The undersigned declares under penalty of perjury that this Proposal is genuine, is not a sham or collusive, and is not made in the interest or in behalf of any person or entity not herein named. The undersigned further declares under penalty of perjury that the bidder has not directly or indirectly induced or solicited any other bidder to submit a sham bid, or any other person, firm, or corporation to refrain from bidding. The undersigned also declares under penalty of perjury that the bidder has not in any manner sought by collusion to secure for itself an advantage over any other bidder.

I declare under penalty of perjury under the laws of the state of Utah that the foregoing is true and correct.

Date: August 22, 20 03

Bidder: Advanced Burner Technologies Corp.

Address: 350 Main Street, Suite 5
Bedminster, NJ 07921

Signed By: _____
(Authorized Signature)

Print Name: ~~xxxxxxxxxxx~~ Sal Ferrara

Title: Director of Proposals & Projects

* 50% Performance Bond for construction 10% Retention for equipment performance.

Spec. 45606

Contract No. 04-45606

Bond No. _____

LABOR, MATERIAL, AND PERFORMANCE BOND

1. Know all persons by these presents, that

_____

(Insert Contractor's name and address or legal title)

_____

as Principal, hereinafter called Contractor, and

_____

as Surety, hereinafter called Surety, are held and firmly bound unto Intermountain Power Agency, Intermountain Power Service Corporation, hereinafter called IPSC, and the City of Los Angeles Department of Water and Power, as Obligees, in the amount of _____ Dollars ($_____) for the payment whereof Contractor and Surety bind themselves, their heirs, executors, administrators, successors and assigns, jointly and severally, firmly by these presents.

2. WHEREAS, Contractor has by written agreement dated _____, 20___, entered into a Contract Agreement with IPSC for **Unit 2 Low NOx Burners** in accordance with Contract No. **04-45606** which Contract is attached hereto and by reference made a part hereof, and is hereinafter referred to as the Contract.

NOW, THEREFORE,

3. THE CONDITION OF THIS OBLIGATION is such that, if Contractor shall promptly and faithfully perform said Contract, and shall promptly make payment to all claimants for labor and material used or supplied for use in the performance of the Contract, then this obligation shall be null and void; otherwise, it shall remain in full force and effect.

4. Whenever Contractor shall be, and declared by IPSC to be, in default under the Contract, IPSC having performed IPSC's obligations thereunder, the Surety may promptly remedy the default, or shall promptly:

   a. Complete the Contract in accordance with its terms and conditions, or

   b. Obtain a bid or bids for submission to IPSC for completing the Contract in accordance with its terms and conditions, and upon determination by IPSC and Surety of the lowest and best, regular responsible bidder acceptable to IPSC, arrange for a Contract between such bidder and IPSC, and make available as work progresses (even though there should be a default or a succession of defaults under the Contract or Contracts of Completion arranged under this paragraph) sufficient funds to pay the cost of completion less the balance of the Contract price, but not exceeding the amount of the Bond. The term "balance of

the Contract price," as used in this paragraph, shall mean the total amount payable to Contractor under the Contract and any amendments thereto, less the amount previously paid to Contractor.

5. Upon failure of Contractor to timely pay laborers and material men, Surety agrees to discharge such obligation in an amount not exceeding the sum set forth above and also, in case suit is brought upon this Bond, a reasonable attorney's fee to be fixed by the court. This Bond shall inure to the benefit of any and all persons named in Title 14, Chapter 2, Utah Code, as amended, so as to give a right of action to such persons or their assigns in any suit brought upon this Bond.

6. No right of action shall accrue on this Bond to or for the use of any person or corporation other than named herein, or the heirs, executors, administrators, or successors and assigns of the Obligees, except as provided by statutory or regulatory provisions relating to Contractor's bonds upon public and private contracts, the provisions of which are made a part hereof as a supplemental description of Surety's obligations herein.

7. Surety hereby waives notice of any change orders or extensions of time made by IPSC in accordance with the terms of the Contract.

8. SIGNED AND SEALED this _____ day of _____ , 20_____ AD

In the presence of: _____
(Principal)

(Seal)

_____ _____
(Witness) (Title)

(Seal) _____
(Surety)

_____ _____
(Witness) (Title)

PART C- DIVISION C2

BIDDING DOCUMENTS - PROPOSAL SCHEDULE

1. Proposal is hereby made to furnish and deliver to IPSC **Unit 2 Low NOx Burners**, F.O.B. IPSC dock, full freight allowed in accordance with **Specifications 45606**, the following:

   a. Burner and Scanner Performance: The new burners shall provide for a continuous boiler operation of 6,900,000 pounds/hour output, 1,005°F superheat and 1,005°F reheat temperature under all operating conditions. Bidders shall state the following burner and scanner performance guarantees and submit with the bid package:

BURNER AND SCANNER PERFORMANCE GUARANTEES	
Maximum Burner Nox and CO Production Under All Modes of Operation:	NOx=0.33 lb/mbtu CO=200 ppm
Maximum Burner BTU Throughput:	> 220 MBtu/hr
Burner and Scanner System Temperature Tolerance and Thermal Degradation Life:	Burner Tip=2000°F Scanner Electronic=140°F
Time Within Which Burner Register Assembly Shall Remain Fully Operable By Hand:	Past Guarantee Period
Combustion Zone Stability (Ignition Location/Stability, Flame Shape/Color):	Bright Flame in throat
Ash Deposition (At Burner Throat, OFA Ports, and Superheat Pendants:	Burner Throats & SH No add'l from current
Maximum Burner Out-Of-Service Cooling Air Requirements (CFM Per Compartment):	Scanners= 15 SCFM at 10"W.C.
Minimum In-Service Air Flow With Associated Emissions (Assuming 10 Percent Total Overfire Air Flow):	See Proposal Sec. 4
Maximum In-Service Air Flow With Associated Emissions (Assuming 10 Percent Total Overfire Air Flow):	See Proposal Sec. 4
Maximum Wear Life of Primary Air/Coal Path Components (Minimum Four (4) Years):	Nozzles: 6-8 yrs.+ Fuel Dist. 4-6 yrs. +

b. In support of the stated guarantees, the bidder shall provide clear commitments in the following areas:

CLEAR COMMITMENTS
The Nature of Remedial Efforts That Will Occur to Achieve Guaranteed Performance in Each Area
The Approximate or Typical Time Frame Associated with Resolution of Each of the Stated Performance Guarantees
The Company or Organization Expected to Provide the Applicable Resources Associated with the Remedial Work (Modifications, Testing, and Operational)
The Ultimate Monetary Compensation Offered by the Original Equipment Manufacturer (OEM)

2. Prices: The price or prices shall be according to the following bid pricing sheet:

BID PRICING SHEET	
Bid Price to Purchase Forty-Eight (48) Low NOx Burners, Per Specifications, Without Scanners:	$ 2,237,415.00
Bid Price to Purchase Forty-Eight (48) Scanners and Ancillary Hardware, Per Specifications:	$ 157,130.00
Bid Price to Install Forty-Eight (48) Burners and Associated Flame Detection Systems:	$ 1,473,130.00
TOTAL BID PRICE:	$ 3,867,675.00

3. Cash Terms: A discount for prompt payment is offered of 0% percent for Contract payments made within 30 calendar days after date of acceptance or delivery and receipt of invoice.

4. Taxes: The foregoing quoted prices are exclusive of all applicable sales and use taxes.

5. Manufacturer: Advanced Burner Technologies and IRIS or ABB (option)

6. Location of Point of Manufacture: USA

7. Brand and Catalog Number or Other Designation: OPTI-FLOW™

Low NOx Burner, IR-P532/S552 or Safeflame™ DFS

8. Form of Business Organization: The bidder shall state below the form of its business organization.

9. Bidder is a: Corporation, organized under the laws of the state of NJ.
(Corporation, Partnership, Limited Partnership, Individual)

If a partnership, the bidder shall state below the names of the partners. If a corporation, the bidder shall state below the names of the president and of the secretary.

10. Person to Contact: Should IPSC desire information concerning this Proposal, please contact:

Name: Sal Ferrara Telephone No: 908-470-0721

Address: 350 Main Street, Suite 5, Bedminster, NJ 07921

(If different, the address of bidder's chief executive office is:)

PART C - DIVISION C3

BIDDING DOCUMENTS - ADDITIONAL BID INFORMATION

1. Bid Submittal Requirements: Information supplied in submittals shall include, but not be limited to, the following:

   a. Schedule showing the cost of replacement parts for both the burner components and the flame detection system, including a pricing index for calculating cost of individual replacement parts through the year 2010.

   b. A recommended spare parts list with current pricing and normal delivery schedule.

   c. Location, name, and telephone number of the nearest service technicians for both burners, burner instrumentation, and the flame detection systems.

   d. Analysis of fail-safe modes of operation of the flame detection system, including component self-diagnostics and alarming.

   e. Dimensional drawings as required for bid analysis and evaluation.

   f. Burner and lighter materials of construction and applicable temperature tolerance.

   g. Environmental limitations of burner and scanner hardware, including both airborne contaminants and heat.

   The Proposal form in Part C, Division C2, Bidding Documents - Proposal Schedule, that was submitted with Proposal, listed the maximum and minimum limitations of offered equipment as being 2000°F and 140°F for the "Burner Tip" and "Scanner Electronic", respectively. The design for specific components is based on expected temperature exposure with the following limitations:

LIMITATIONS	
Component Description	**Material Limitation, °F**
Those exposed to direct furnace radiation, i.e., flow divider, spin vanes, throat casting, register front cone, fuel injector tip and flame stabilizers:	2000
Those semi-shielded from furnace radiation, i.e., fixed vane spinner and inner zone damper perforated plate:	1600

LIMITATIONS	
Component Description	**Material Limitation, °F**
Those shielded from furnace radiation, set back from furnace opening, and exposed to maximum windbox temperature, i.e., register sleeve dampers, register backplate, windbox coverplate, fuel injector barrel, elbow flatback and fuel distributors:	750

Explanatory Comment: The reason for stating that there are no environmental limitations to the coal burners is that the stainless steel castings and plate facing the fire, ASTM 297 Gr HE or 309 will not deteriorate at temperatures of at least 2000°F. ABT has never measured tip temperatures above 1600°F, in pre-NSPS furnaces that have input per plan levels as high as 2.3MBTu/hr/ft^2 and Furnace Exit Gas Temperatures or 2400°F and firing Eastern bituminous coals. These are a good deal higher than Intermountain and generate higher gas temperatures.

Consequently, ABT does not consider operation of its design in IPSC's boiler to have any environmental limitations: The conditions are such that no material will operate anywhere near its limit. In fact, ABT has placed no such limitations on any retrofit ABT has done.

h. Available and recommended modes of operation for both the flame detection system and the burner system.

ABT will not require any special modes of operation in that the existing burner controls should not require changes. Burners will be setup during optimization (at 100 percent MCR) which will begin with components at predetermined positions similar to the follow example:

PREDETERMINED POSITIONS	
Burner Secondary Air Sleeve Dampers (SAD):	80 Percent Open
Burner Outer Air Registers Spin Vanes:	40 Percent Open
Burner Inner Air Sleeve Damper:	20 Percent Open

Following start-up these components are used to control the shape and ignition point of the flame, which in turn controls NOx, O2 distribution and CO emissions. The final settings are tabulated and provided to the customer for future

reference. During normal operation, following optimization, further adjustments should not be necessary unless a significant change in fuel supply characteristics occurs.

In no case has ABT required any customer to modify normal procedures to accommodate its burners; however, as noted in the guarantee section, ABT does require good fuel balance in the coal pipes, accurate primary air flow measurement and control, and that the primary air flow decrease as mill load decreases. ABT does not consider these to be "special modes of operation"; rather good operation.

i. Recommended maintenance requirements for the burners and flame detection system.

j. Required boiler modifications for accommodation of the new hardware.

k. Installation and performance history of the burners and flame detection system.

l. Recommended spare parts for all hardware or software provided.

m. Proposed installation plan, including recommended methods of installation for maximizing both installation productivity and operating reliability.

PART C - DIVISION C4

COMMENTS, EXCEPTIONS, ADDITIONS, AND COST SUMMARY

The following is a list of comments, exceptions, additions, and cost summary to Specifications 45606 which shall be incorporated as part of the Contract Documents in Contract 04-45606.

1. Exception/Change: ABT Payment of Schedule:

ABT 5.2 PAYMENT SCHEDULE	
20 Percent	Burner material on order.
10 Percent	Upon Submittal of burner and flame detection system and general arrangement drawings.
30 Percent	Upon commencement of burner fabrication.
30 Percent	Upon receipt of all burners on the job site. (Note: Early shipment is acceptable with storage at IPP job site.)
10 Percent	Upon completion of start-up and adjustment of burners.

2. Addition: The following feature shall also be included:

ABT 3.1 OPTI-FLOW LOW NOx BURNERS
Ratchet-type actuators are to be provided for moving the sleeve damper and spin vane ring. In addition, the dual-handle control features for both the damper and spin vane ring are to be retained.

3. Addition: IPSC selects the ABB scanner with noted exceptions (see Addition 4, below); include with that selection, Option 2 and Option 5.

ABT A2-2 ABB		
Option 2	Safe Flame Sensor Module Communication Server (SMCS)	Cost: $10,000
Option 5	Safe Flame DFS (recommended spare parts)	Cost: $11,288

4. Addition: The following will be provided for in the Contract:

ABT A2-2 ABB, Pages 1 and 2
ABB has quoted sixteen (16) amplifier enclosures to be located at the burner with front-access chassis. IPSC requires location of the amplifiers and enclosures near the control room to minimize boiler washdown damage. IPSC requires the chassis to be rear-access with (2) cabinets of 24-inch depth containing eight (8) chassis, rather than the twenty-six (26) called-out. This will require increasing the cable runs from 50 feet to approximately 500 feet.
IPSC intends to provide local-indication, at the burner, for a flame intensity value. IPSC will provide the instrumentation for this local-indication requirement.

5. Cost Summary: The total cost of the Contract to supply burners and options is:

COST SUMMARY	
Item	**Cost**
Burners:	$2,237,415
ABB Scanners: Option 2 (SMCS): Option 5 (Parts):	$ 212,515 $ 10,000 $ 11,288
Performance Bond:	$ 15,000
Professional Liability Premium:	$ 60,000
Total Cost:	**$2,546,218**

ADVANCED BURNER TECHNOLOGIES

30 Main Street, Suite 5
Bedminster, NJ 07921
P 908.470.0470
F 908.470.0479
www.advancedburner.com

September 12, 2003

Intermountain Power Service Corporation
850 West Brush Wellman Road
Delta, Utah 84624

Attention: Nancy C. Bennett, C.P.M.

Reference: Contract 04-45606 -Unit 2 Low NOx Burners

Dear Ms. Bennett:
Advanced Burner Technologies thanks you for your valuable order. Enclosed are three (3) original contracts with our signature on page 3 of the "Contract Agreement" form. With these executed documents, we acknowledge receipt of this contract and confirm our agreement based on the following clarifications to the contract document:

Part F - Division F1 - Article 6b. Commercial General Liability
Line 8, strike "$8 million", replace with "$2.5 million"

Division C4 - Comments, Exceptions, Additions, and Cost Summary - 1. ABT 5.2
Invoices will be issued in advance of achieving milestones, this is to insure immediate issue of payment upon achieving milestone.
Explanation: This is offered in place the "20% Invoice Upon Award" stated in ABT's proposal.

Division C4 - Comments, Exceptions, Additions, and Cost Summary - 2. ABT 3.1
2nd line, delete the words "for both the damper and".
Explanation: The sleeve damper will be controlled via single handle.

Division C4 - Comments, Exceptions, Additions, and Cost Summary - 5. Cost Summary
Delete "Performance Bond" and amount "$15,000".
Revise "Total Cost" to read "$2,531,218".
Explanation: The performance bond was offered on "Installation" however we understand from these contract documents that installation is excluded from the contract. 10% retention is to be held until successful performance testing, in place of a performance bond on equipment.

Please acknowledge IPSC's agreement with these clarifications to the contract documents with signature in space provided below and return with one original IPSC executed contract.
We again thank you for your valuable order and look forward to providing you with a Quality Engineered and Manufactured System, with an on time delivery.

By: George W. Cross Date: 9/16/03
George W. Cross
President and Chief Operations Officer

Sincerely yours,

Sal N. Ferrara

Executive Summary and Philosophy

Advanced Burner Technologies Corporation is pleased to offer this proposal to Intermountain Power Service Corporation to supply and install state-of-the-art low NO_x burners for the Delta Unit #2 boiler. The specification lists several western bituminous coals, none of which, either singly or in the combinations specified, present any problem for ABT. The NO_x guarantee is 0.33 lb/MBtu is based upon what we understand to be the worst coal, SUFCO, which currently yields NO_x of about 0.45. Consequently, the NO_x will be reduced by at least 25% under equivalent operating conditions: 15% excess air and no overfire air flow. With 10% OFA flow, NO_x will be reduced to about 0.29 and with 20% to <0.25.

These values are based upon actual field experience with boilers of various sizes firing fuels ranging from lignite to PRB to eastern and western bituminous coal, as well as bit/PRB mixtures; and equipped with ABT's low NO_x burners only or these burners plus our OFA system. Consequently, we have a very high degree of confidence that these values can be attained in operation at Delta #2.

Under contract to ABT, Airflow Sciences Corporation will perform CFD models of the windboxes. This will enable us to optimize the secondary air distributions within the compartmented windbox design.

This proposal includes complete mechanical and electrical installation of all ABT supplied equipment. ABT's installation partner is Maintenance Enterprises, Inc., whose General Manager, Mike Simonds, has worked with ABT on several low NO_x conversions. These conversions include the turn-key supply and installation of low NO_x burners and overfire air systems at two 540 MW Kentucky Utilities boilers and installation of our burners on another 500MW unit at Deseret Generation & Transmission Coop in Vernal Utah. MEI, under Mr. Simonds' direction, will do an exemplary job of installing the ABT equipment.

We have the utmost confidence that the guarantees we have offered will be met.

Joel Vatsky, President
Advanced Burner Technologies Corp

Table of Contents

Section-Page

Executive Summary i

1.0 Introduction....1-1
- 1.1 Background.... 1-1
- 1.2 NO_x Control Philosophy.... 1-1
- 1.3 Opti-Flow ™ Low NO_x Burner.... 1-2
- 1.4 Analytical Evaluation.... 1-2

2.0 Technical Discussion.... 2-1
- 2.1 Boiler Comparisons and ABT Experience.... 2-1
- 2.2 The Opti-Flow™ Low NO_x Burner.... 2-5
  - 2.2.1 Fuel Injector for Intermountain Unit 2 2-6
  - 2.2.2 ABT Opt-Flow™ Dual Register with Fuel Injector.... 2-6
- 2.3 Analytical Evaluations.... 2-6
- 2.4 Testing.... 2-7
- 2.5 ABT Support Personnel.... 2-7

3.0 Scope of Work.... 3-1
- 3.1 Opt-Flow™ Low NO_x Burners.... 3-1
- 3.2 Flame Scanner Systems.... 3-1
- 3.3 Individual Secondary Air Flow Measurement.... 3-2
- 3.4 Flow Modeling.... 3-2
- 3.5 Drawings and Operating Manuals.... 3-3
- 3.6 ABT Field Support Services.... 3-3
- 3.7 Mechanical & Electrical Installation 3-3

4.0 Guarantees and Warrantees.... 4-1
- 4.1 Workmanship and Quality.... 4-1
- 4.2 Reliability.... 4-1
- 4.3 Pressure Drop.... 4-1
  - 4.3.1 Fuel Injector.... 4-1
  - 4.3.2 Secondary Air.... 4-1
- 4.4 NO_x 4-2
- 4.5 CO.... 4-3
- 4.6 Excess Air.... 4-3
- 4.7 Unburned Carbon Expressed as Loss on Ignition.... 4-3
- 4.8 Boiler Performance.... 4-3
- 4.9 Mill and Fuel Conditions.... 4-3
- 4.10 Ash Patterns.... 4-4
- 4.11 Remedies for NO_x, CO and LOI Exceeding Guarantee Values....4-4
  - 4.11.1 Financial Remedies.... 4-5

4.12 Vendor Equipment 4-5

5.0 Pricing & Schedule 5-1
5.1 Pricing 5-1
5.2 Payment Schedule 5-1
5.3 Delivery Schedule 5-1
5.4 Recommended Spare Parts 5-1

6.0 Exceptions and Clarifications 6-1

7.0 The Opti-Flow ™ Low NO_x Firing System 7-1
7.1 Opti-Flow ™ Low NO_x Burner 7-1
7.2 Opti-Flow™ Fuel Distributors 7-4
7.3 Implications for Field Results 7-5

A-1 Drawings
A-2 IRIS & ABB - Flame Scanner Systems
A-3 Eastern Instruments - Burner Airflow Measuring System
A-4 MEI - Installation

1.0 Introduction

1.0 Introduction

1.1 Background

Intermountain Power Service Corporation (IPSC) Unit 2 is a B&W pulverized coal, supercritical boiler rated at 6,900,000 pounds of steam per hour. This unit fires western bituminous coal using 48 OEM dual register low NO_x burners. NO_x emissions typically range between 0.4 and 0.45 lb/10^6 Btu at full load as a function of coal source, with one mill out of service.

Advanced Burner Technologies (ABT) has developed a novel, highly effective low NO_x burner that has demonstrated NO_x levels in the 0.35 – 0.40 range on several large boilers firing bituminous coals, including western coal. Approximately 10,000 MW of large utility boilers have been converted to ABT's Opti-Flow™ burner design. These units range in capacity from 70 to 720 MW. In addition, ABT has implemented a novel OFA system along with its low NO_x burner, to obtain minimum NO_x without performance or operational problems. Fuels range from lignite to high sulfur bituminous coal.

Intermountain Unit 2 has a moderate burner zone liberation rate (BZLR) of approximately 300,000 Btu/hr-ft^2. For this furnace burning western bituminous coal, ABT would expect operating NO_x levels at full load to be in the range of 0.30 - 0.35 lb/10^6 Btu with a retrofit of 48 Opti-Flow™ low NO_x burners and one mill out of service; with overfire air port closed.

1.2 NO_x Control Philosophy

Advanced Burner Technologies utilizes the following considerations for attaining minimum NO_x levels while minimizing the potential for adverse furnace effects.

1. Utilize a highly effective low NO_x burner that achieves minimum NO_x emissions without overfire air.

2. Balance coal flows to the burners to eliminate very high coal flow regions that generate high LOI and CO, and very low coal flow regions that generate high NO_x.

3. Eliminate poor windbox distribution of secondary air caused by stratifications and recirculation zones that exacerbate the burner balancing problems caused by poor coal line distribution.

Note: It is ABT's experience that minimum NO_x, CO and LOI cannot be attained without addressing the fuel and air imbalances that exist in most boilers.

NO_x is generated by two different processes; fuel bound nitrogen and thermal NO_x. Thermal NO_x formation is promoted by high furnace temperatures (i.e. BZLR), which convert atmospheric nitrogen to NO_x. Intermountain Unit 2 has a moderate BZLR and

thermal NO_x generation is an issue, with this furnace heat release. However, the ABT Opti-Flow™ fuel injector produces a flame that efficiently reduces fuel bound nitrogen compounds to N_2, as well as minimizing thermal NO_x formation. The Technical Discussion section contains a more complete discussion of the furnace parameters and its relationship to NO_x.

1.3 Opti-Flow™ Low NO_x Burner

The heart of the Opti-Flow™ low NO_x burner is a fuel injector that improves reliability and performance as compared to more conventional fuel injectors. The combination of the new fuel injector and a suitable low NO_x dual register, results in a low NO_x burner that attains at least 35 percent lower NO_x levels than the conventional designs of low NO_x burners it has replaced.

The Opti-Flow™ low NO_x, flame stabilization nozzle is the key element of the fuel injector for attaining excellent flame stability along with minimum NO_x. Excellent flame stability is achieved due to external flame stabilizers surrounding each segment. Nearly uniform fuel distribution around the burner nozzle circumference is obtained, which provides significant aid in attaining minimum NO_x and UBC simultaneously.

Advanced Burner Technologies utilizes high quality stainless steels for all parts of the fuel injector that face the furnace, as well as stainless steel castings for all complex parts. The result is high reliability and excellent longevity of the burners.

ABT's Opti-Flow™ dual register is an innovative design that provides the operator with the flexibility of optimizing: inner and outer zone swirl values and the air flow split between the inner and outer zones independently of swirl. This is accomplished with a manually adjustable inner air damper and represents a significant improvement over other dual register designs. A fixed vane swirler is fixed to the outer barrel of the fuel injector to impart swirl to the inner air zone.

1.4 Analytical Evaluations

CFD (Computational Fluid Dynamics) is an analytical tool that aids in the design of air delivery systems. CFD allows us to evaluate alternatives and provide an optimized system without modifying the system after installation. Air supply systems in a boiler are so complex it is impossible to optimize a system using conventional duct design techniques. Consequently CFD analysis is utilized for the following:

- Optimize air flow distribution to the burners within the existing wind-boxes.
- Minimize pressure loss in ducts

For Intermountain Unit 2, a primary area of investigation is CFD modeling of the wind-box air flow. Airflow Sciences Corporation (ASC) will develop a model of the wind-box and secondary air ducts, in order to evaluate the air flow distribution to the

IP7_032414

burners within the windboxes and the air flow to each individual burner. The results will be used to design any turning vanes, baffles or other distribution devices to improve air flow within the ducts and windboxes.

Note, that this B&W boiler uses compartmented windboxes that do not act as true plenums. Consequently, secondary air flow is not uniformly distributed to the burners within the windbox; and it has been ABT's experience that these windbox flows can be unstable.

ABT has a means of eliminating the instability and minimizing burner-to-burner secondary air imbalances by converting each compartment into a nearly true plenum. The cost for this is very moderate and it's effectiveness has been shown in the field on a 560 MW B&W boiler.

IP7_032415

2.0 Technical Discussion

2.0 Technical Discussion

The NO_x emission from any given boiler is a function of several variables:

- Furnace size relative to full load heat input: The larger the furnace for a given heat input, the lower the temperatures will be. Therefore, thermal NO_x will be lower. This parameter, Burner Zone Liberation Rate, is expressed as Q/BZS.

- Fuel Parameters: The fuel constituents which have the largest impact on NO_x are N_2, HHV, and FC/VM.

- Burner Design: The design of the burner produces the largest effect on both combustion and NO_x emissions. Very low NO_x levels can only be attained with a highly effective low NO_x burner.

To determine the NO_x level a boiler is capable of generating with a given low NO_x burner, a comparison is made of that boiler with a unit that has similar BZLR, fuel parameters, and the same burner design.

2.1 Boiler Comparisons and ABT Experience

Burner Zone Liberation Rate (BZLR) is the ratio of heat input to the furnace (Q) to the Burner Zone Surface (BZS). The following calculation of BZLR is summarized below:

$Q = w_f [HHV + (\# air / \# fuel) (0.248) (T_a - 80)]$

Where: w_f = fuel flow (lb/hr) and T_a = secondary air temperature

$BZS = 2 (WD + WH + HD)$

(The BZS is the six-sided box that surrounds the burners.)

Where: W = unit width, D = unit depth, H = wall height from the hopper knuckle to 10' above the top burner level.

For Intermountain, using the design coal analysis:

$Q = 9038 \times 10^6$ Btu/hr

$BZS = 29{,}566\ ft^2$

$BZLR = Q/BZS = 305{,}700\ Btu/hr/ft^2$

ABT considers NO_x emissions of 0.30 - 0.35 lb/10^6 Btu with western bituminous coal to be attainable with the Opti-Flow™ low NO_x burner, with OFA ports closed. Our

experience with the Opti-Flow™ burner on a boiler with similar BZLR firing western bituminous coal has demonstrated that a NO_x level of 0.35 lb/10^6 Btu is attainable.

Figure 2-1 compares NO_x levels as a function of BZLR for several cases:

a) OEM low NO_x burners (B&W and Foster Wheeler) firing bituminous coal for three (3) boilers. The data indicate that there is little difference between the B&W and FW low NO_x burners of that early vintage.

b) Data for Deseret Bonanza Unit one which has a BZLR similar to that for Intermountain. In addition, this boiler fires a western bituminous coal with characteristics similar to the coal(s) fired at Intermountain.

Figure 2.1 Low NOx Burner Comparison
NO_x vs. Burner Zone Liberation Rate

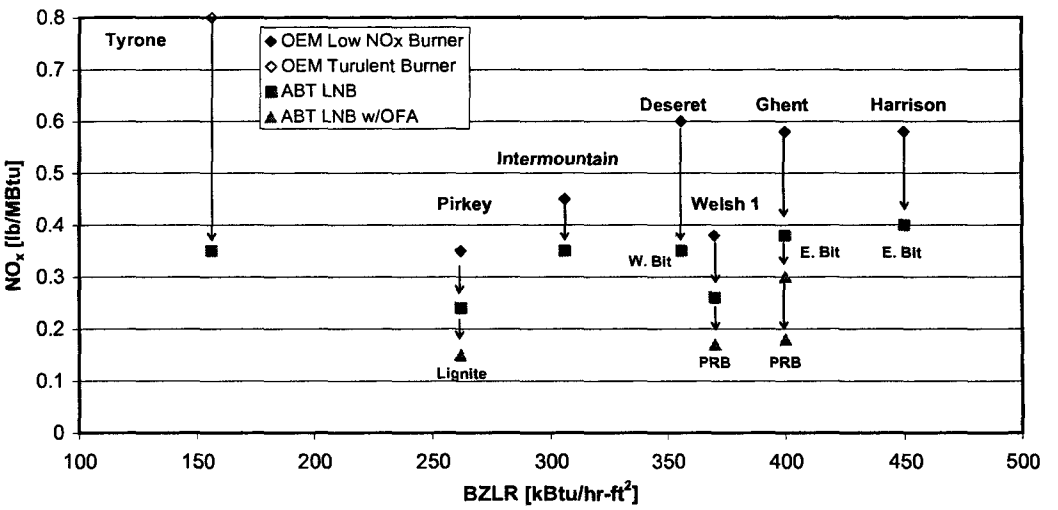

Shown in Figure 2-1 is data for the following six boilers firing lignite, PRB and bituminous coal:

Deseret, Bonanza Unit 1: A 440 MW Foster Wheeler boiler, firing western bituminous coal similar to the worst Intermountain coal, was retrofitted in May 1997 with 20 Opti-Flow low NO_x burners. NO_x emissions before the retrofit, with the original Foster Wheeler low NO_x burners, were typically in the 0.55 to 0.6 range. After the retrofit, with the ABT low NO_x fuel injectors and dual register modifications, NO_x is approximately 0.35. In 2001, three of the five mills were replaced with larger units and the new mill's burners were upgraded to handle the higher capacity. The boiler now produces 500 MW with no increase in NO_x or detrimental impacts to boiler performance. Burner coking and fires have been eliminated, as have burner eyebrows and furnace slag.

Deseret Contact: Dan Howell 435-781-5718

AEP/SWEPCO, Welsh #1: A 560 MW B&W boiler with 42 burners (NO_x with OEM dual register low NO_x burners was ~0.38). Unit was retrofitted with ABT Opti-Flow Mark I burners in the fall of 1999; initially no OFA ports were installed. Operating with one top burner deck out of service, NO_x was typically in the 0.20 to 0.22 range.

In the fall of 2001, ABT's OFA system was installed at Welsh #1. With the OFA ports open, NO_x has been reduced to the 0.16 – 0.17 range with all mills in service. It is apparent that significant coal line imbalances exist at Welsh #1; these imbalances limit the degree of NO_x reduction that can be achieved, since they result in high CO emissions. Although the unit was designed for operation with 19% excess air, it must currently operate with approximately 25% excess air in order to control CO. Minimizing these coal line imbalances will allow operation at near design excess O_2 or below and reduce the NO_x to the 0.15 level.

AEP/SWEPCO, Pirkey #1: A 700 MW B&W boiler firing Texas lignite (NO_x with OEM dual register low NO_x burners was ~ 0.36 to 0.38). The unit was completely retrofitted with 56 ABT Opti-Flow Mark II Low NO_x burners and OFA system in the fall of 2001. NO_x emissions, with the OFA ports closed, have been lowered to approximately 0.22. Operation of the OFA system has been very successful in that the boiler can operate continuously at full load with NO_x emissions of ~ 0.15 lb/10^6 Btu with one mill out of service (normal operation).

AEP Contact: Kent Randall 318-673-3813 Welsh & Pirkey Plants

Kentucky Utilities, Ghent #3 and #4: Two 540 MW FW boilers firing Kentucky bituminous coal. NO_x emissions of 0.55 to 0.7 without OFA and about 0.45 with OFA ports open were attained with the OEM low NO_x burners and OFA system. ABT replaced all 24 fuel injectors, with the Opti-Flow Mark I design, upgraded the FW dual registers and supplied a new OFA system to each boiler. Unit #3 was converted in the fall of 1998 and Unit #4 in the fall of 1999. NO_x was reduced to about 0.40 while firing Eastern bituminous coal and 0.23 for PRB coal, with OFA ports closed; and to 0.3 and 0.18 respectively with OFA ports open. Currently, NOx is about 0.3 firing a 50/50 blend of E. bituminous and PRB with OFA ports closed.

The walls of these boilers are coated with refractory to maintain furnace temperatures and to attain design steam temperatures (low steam temperatures resulted from an OEM boiler design problem). Prior to the retrofit, there were frequent heavy slag falls from the walls; however not a single slag fall has been observed following the retrofit.

Ghent Contact: Steve Nix 502-347-4152

Allegheny Energy, Harrison #1, 2 and 3: Three 660 MW FW boilers that are of pre-NSPS design with very hot, tight furnaces firing a highly slagging, eastern bituminous coal. All units were upgraded by replacing the fuel injector with the ABT design, while maintaining the existing FW dual registers. NO_x emissions have been reduced from the 0.55 to 0.6 range to below 0.45 without overfire air. The furnaces are clean

with no evidence of any operating or performance problems, due to the new low NO_x burners. Unburned carbon is in the same range as before the retrofit.

Harrison Contact: Dean Hedrick 304-584-2350

Tyrone Unit#3/ Green River Unit #3: These are 70 MW B&W boilers each originally with eight turbulent burners firing Eastern bituminous coal. Tyrone was started up in fall 2001 and Green River in spring 2002.
NO_x has been reduced from about 0.8 to below 0.35 lb/10^6 Btu without OFA. There was no increase in UBC and no deterioration in boiler performance or efficiency.

Tyrone Contact: Tom Moore 859-879-3501
Geen River Contact: Tom Troost 270-757-3113

JEA St. John Unit #1: A 660 MW Foster Wheeler boiler that fires a blend containing 20% petroleum coke and 80% bituminous coal with 28 burners; more petroleum coke is fired in this boiler than any other pulverized coal boiler in the U.S. In addition, Colombian coal is fired in this blend, which makes it an even more difficult fuel since this coal is commonly known to be difficult to burn.

In early 2003, St. Johns Unit 1 was completely retrofitted with 28 Opti-Flow™ LNB's and similar windbox/secondary air modifications. Preliminary burner tuning has shown that NO_x has been reduced by over 20% for Unit 1; further reduction in NO_x is anticipated once additional burner tuning is completed.

Excellent flame stability has also been attained with the retrofit of Opti-Flow™ burners for Unit 1. In fact, the petroleum coke blend can now be fired in the lower rows of burners without flame stability problems. Excellent flame stability is also maintained as load is reduced from 670 MW to 380 MW, with only one mill out of service (normal operating practice with these boilers). Prior to the retrofit of Opti-Flow™ burners, this turndown could not be achieved with only one mill out of service. To date, ABT is the first to demonstrate the ability to cofire petroleum coke in a wall-fired boiler with an advanced low NO_x burner that maintains such excellent flame stability and NO_x reduction.

St. Johns Contact: Bob Branning 904-665-8806

Of particular note from the data shown in Figure 2-1 are the following:

- **Opti-Flow™ low NO_x burners result in a relatively flat BZLR curve by minimizing thermal NO_x formation.**
- **At the high BZLR values of Deseret, Ghent, and Harrison, the Opti-Flow™ burner NO_x level is at least 35% lower than the OEM's low NO_x burners.**

- **NO_x shows only a slight dependence on BZLR for boilers with ABT low NO_x burners. The BZLR for Intermountain is similar to Deseret, which show NO_x emissions of 0.35. This data indicates that a NO_x level of 0.33 is attainable for Intermountain at 15% excess air and OFA ports closed.**

2.2 Opti-Flow™ Low NO_x Burner:

ABT's Opti-Flow™ low NO_x burner generates a very bright, intense flame that does not look like the classical low NO_x flame: its intensity is more akin to that of classical turbulent burners. Yet, the NO_x levels are typically more than 35 percent lower than those generated by competitors' low NO_x burners that ABT has replaced firing bituminous coal and more than 40% lower than those firing PRB. This NO_x reduction result has been attained without any additional UBC penalty.

The Opti-Flow™ low NO_x, flame stabilization nozzle is the key element of the fuel injector for attaining excellent flame stability along with minimum NO_x. Excellent flame stability is achieved by incorporating external flame stabilizers surrounding each nozzle segment. The segmented coal nozzle has an open design with no obstructions to wear or to collect coal. Nearly uniform fuel distribution around the burner nozzle circumference is also obtained, which provides significant aid in attaining minimum NO_x and UBC simultaneously. Pressure drop is minimal and there are no components in the coal path that would be subject to wear, coal accumulation, or coking.

Advanced Burner Technologies utilizes high quality stainless steels for all parts of the fuel injector that face the furnace, as well as stainless steel castings for all complex parts. The result is high reliability and excellent longevity of the burners.

ABT's Opti-Flow™ dual register is an innovative design that provides the operator with the flexibility of optimizing inner and outer zone swirl values, and the air flow split between the inner and outer zones independently of swirl. This is accomplished with a manually adjustable inner air damper and represents a significant improvement over other dual register designs. A fixed vane swirler is attached to the outer barrel of the fuel injector to impart swirl to the inner air zone.
In order to be most effective, any low NO_x burner must operate in an external environment that provides proper conditions needed for optimal combustion at each burner. There are two operational areas that are extremely important for best burner performance with minimum flame length:

a) Known and accurately controlled primary air flow along with other sources of air which enter the fuel injector: such as auxiliary air and seal air. ABT has sized the fuel injector proposed here based on the PA flow contained in the OEM mill curves for Intermountain Unit 2. This primary air flow must be verified during pre-retrofit testing.

b) PA/coal flows between burners must be as balanced as possible. Significant imbalances in either PA or coal flows will yield:

- Longer flames on some burners.
- High NO_x from the burner with low fuel flow
- High UBC from the burner with high fuel flow
- High windbox pressure caused by an attempt to force an excessive amount of air to the high fuel burners.

This problem is generated by both unequal coal pipe lengths (resistance) and external mill stratifications. ABT's experience is that the proper use of adjustable coal pipe orifices can alleviate this problem to a considerable degree.

2.2.1 Fuel Injector for Intermountain Unit 2

The key components of the fuel injector include:

a) Fuel Distribution System: Flow enhancing fuel distribution system yields nearly uniform coal distribution at the burner nozzle. Uniform coal distribution helps to minimize NO_x and prevent significant increase in unburned carbon. This will be shop installed into the existing ceramic lined sweep elbows.

b) Low NO_x Opti-Flow™ Segmented Burner Tip: Cast stainless steel open coal nozzle with integral external flame stabilizers promotes internal fuel staging reactions which result in minimum NO_x, yet provide extremely stable, bright flames.

2.2.2 New ABT Opti-Flow Dual Registers with Fuel Injector

ABT's complete dual register, described in detail in Section 7, will be installed in combination with our fuel injector. The improvements in air flow control and operability will amplify the fuel injector's ability to control NO_x. Minimum NO_x with optimal flame shape should then be attainable. The ABT dual register design provides the following:

- Optimized secondary air flow to the burners (nearly equal total air/coal ratios) accomplished by adjustment of individual burner dampers.

- Independent control of secondary air swirls and flow distribution within the burner.

2.3 Analytical Evaluations

Airflow Sciences Corp (ASC) will develop a CFD model of Intermountain's burner windboxes and duct work. ABT's experience is that the B&W compartmented

windboxes, with air flow control by louvered dampers, is inherently unstable. This modeling will identify regions where turning vanes and baffles will be needed to optimize flow to the burners, while minimizing pressure drop.

2.4 Testing

IPSC will contract the following testing and analytical services that will be witnessed by ABT's service personnel:

- Pre-retrofit testing will be conducted within three weeks following contract award to verify the primary air flow to the inlet of all of the mills. These tests will be conducted with one mill out of service and three mill loads: maximum, 70% and 40%. Maximum mill load corresponds to boiler full load with one mill out of service.

  Isokinetic coal samples will be taken to evaluate the coal pipe balance. Those mills that have balance worse than ±10% from the mean will need to be balanced.

- A short boiler Baseline Test program will be performed in order to develop baseline data. Emissions and boiler performance data will be taken over the control range of the boiler with all mills in service.

- Emissions testing will be conducted immediately following start-up of the new combustion system. If not currently installed, during the outage the plant should install taps in the flue, upstream of the air heater. Probes will be placed in each tap for a complete grid. NO_x, O_2, and CO will be sampled during the start-up and burner optimization period after the outage. Unburned carbon will be sampled in the same manner as done for the baseline. Start-up, optimization and operational testing are expected to take no more than four weeks.

2.5 ABT Support Personnel

Lead ABT personnel, having > 20 years experience, that would support the Intermountain project are:

Name	Location	Phone No.
George Schiazza-Lead Service Engineer	Jacksonville, FL	904-272-8923
Tarkel Larson-Service & Sales Manager	Chattanooga, TN	423-899-8918
Sal Ferrara-Proposal & Project Manager	Bedminster, NJ	908-470-0721
Chuck Onaitis-Engineering Manager	Bedminster, NJ	908-470-0722

IP7_032423

IP7_032424

3.0 Scope of Supply

Following is the scope of supply offered by ABT for the project.

3.1 Opti-Flow™ Low NO_x Burners

Forty-eight (48) Opti-Flow™ low NO_x burner modules with the following features.

- ABT's fuel distribution system consisting of silicon carbide and ceramic tile-lined components that will be installed in the existing ceramic tile-lined sweep elbow.
- A straight fuel injector with a cast HE tip for thermal resistance and long life.
- An inner air zone with a manually operated sliding damper for inner versus outer air flow distribution control and a stationary fixed vane spinner.
- A manually operated sleeve damper for total burner secondary air flow control and burner air flow balancing.
- Manually operated outer zone, axial spin vanes.
- Materials will be ASTM297 grade HE castings, 309 SS (in high heat affected areas), 304 SS, and carbon steel where appropriate.
- Burner front windbox cover plate.
- New windbox/burner adapter ring.
  Note: ABT has found that some windbox front plates can be warped, resulting in a variation in distance between the windbox plate and the waterwall throat. To provide an easier installation, ABT is providing a seal ring that will slide into the existing windbox opening and allow easier fit-up by compensating for windbox to waterwall variations. The seal ring would be field welded to the windbox (the register front plate comes from the factory bolted to the seal ring.)
- Two thermocouples, each with terminal connection head mounted on burner front plate, for plants use in remote monitoring of burner tip and barrel temperatures.
- Plug-in design requiring no modifications to the windbox, waterwalls or existing burner support rails.
- Burner seal ring to attach to the existing burner throat seal plate.
- All gaskets, nuts, bolts and washers required for field assembly.
- Burner flame view port with purge air connection and ball valve assembly.

3.2 Flame Scanner Systems

ABT offers a replacement flame scanner system, including scanners, amplifiers and connection cables. The base scope includes supply of an IRIS system. Option for supply of an ABB system is also offered that, if selected, would result in a price adder of the amount listed in proposal Section 5.

IP7_032425

Both ABB and Iris have extensive experience and success with their systems. ABT's burner design is easily adaptable to either system. Our burner flame shape and intensity allow for reliable flame scanning. In this case we do not have preference of one scanner system over the other. Experience lists and detailed scope of supply for both systems are included in Appendix A-2 of this proposal.

Fifteen (15) man-days, 8 hr/day, of flame scanner system startup and operational testing time and two (2) man-days, 10 hr/day, hands-on training time for plant personnel is included in the pricing for supply of either system.

3.3 Individual Secondary Air Flow Measurement

Each burner assembly will be equipped with an Eastern Instruments (EI) DPU-Differential Pressure System. Four (4) VAP^{3TM}/PA Pitots will be positioned equally around the circumference of the burner register. Shop installed tubing will connect pitots to fittings mounted on the burner module's front plate. Eight (8) NEMA 4 cabinets, one for each burner elevation, will be supplied with factory installed differential pressure transmitters and root valves. Tubing between cabinets and burner modules will be supplied and field installed. Local indication will be displayed at the transmitter cabinets where terminals will also be provided for the plant's use, should indication in the control room be desired.

We selected the EI system for our burners for its durable, accurate, and maintenance-free design. The VAP^{3TM} /PA with its reverse sensors is designed to operate in heavy particulate environments where dust and granular residue may be present. Also, due to its unique Velocity Averaging^{TM} and Parallel Plate^{TM} patented design, the VAP can be installed in locations where random flow distribution may be present. More detail on features of the VAP is provided in Appendix A-3 of this proposal.

Four (4) man-days of EI startup and hands-on training time for plant personnel is included in supply of the EI measuring system.

3.4 Flow Modeling

In order to achieve balanced airflow to the burners, CFD modeling is required. ABT will subcontract to Airflow Sciences Corporation (ASC) to develop a model for the secondary air duct and burner windboxes. The model will be utilized to evaluate the air flow distribution to the burners. The results will be used to design any turning vanes, baffles or other distribution devices needed to improve airflow within the ducts and windboxes.

Materials (typically carbon steel baffle plates and turning vanes) will be supplied and installed where necessary as depicted by the model.

3.5 Drawings and Operating Manuals

Documentation of the proposed equipment and materials, including arrangement drawings, field installation, and operating instructions will be supplied to IPSC in the format, quantities and time frame requested. Fabrication drawings would be available for IPSC's review in our office, or at the respective fabrication shops.

3.6 ABT Field Services

ABT will dispatch an engineer for field installation and testing support to assist during the initial stages of installation, startup check-out and during optimization of the new combustion system. Included in this proposal are a total of 40 man-days of ABT technical service support for erection, start-up, optimization and operational testing. Should additional service time be requested by IPSC, it would be billed at $1000.00 per eight (8) hour day and time over 8 hours will be billed at a rate of $187.00/hour. Travel and living expenses associated with additional ABT support services would be billed at cost.

3.7 Mechanical and Electrical Installation

ABT will subcontract erection services to Maintenance Enterprises Inc (MEI). Firm prices associated with the installation is entered on the bid form "Bid Pricing Sheet". Appendix A-4 contains conditions and schedule associated with MEI's proposal for the installation scope of work.

IP7_032427

4.0 Guarantees and Warranties

4.1 Workmanship and Quality:

ABT shall warrant the workmanship and quality of the supplied parts from the start-up date for a period of 12 months and 48 months for coal nozzle tips. ABT will supply a replacement for any supplied part which suffers a catastrophic failure due to design or workmanship flaws. IPSC will provide complete access to any supplied part that fails, including removal of any equipment that prevents access to the part to be replaced or repaired and removal and reinstallation of any complete ABT-supplied assemblies that cannot be repaired in-situ.

Changes to the appearance and dimensions of any part will be considered failures only if guaranteed emissions are affected to the extent that the unit is out of compliance and readjustment of burner operating parameters fails to return the emission to within guarantee level; and there are no changes to other equipment, operating methods, or fuel supply which could result in changes to the emissions.

The following requirements apply to both the material warranty and the below listed guarantees:

- Primary air flows shall be within ± 5% of the mill manufacturer's design primary air flow vs. coal flow curve
- Mills will not be operated at full load with more than one burner out of service.

4.2 Reliability

The Opti-Flow™ fuel injector components will prevent coal layout and dropout as well as the potential resultant coking inside the fuel injector during normal start-up and operation. Failures caused by other equipment are excluded, for example: mill and control system problems, igniters, or failed/stuck burner shut-off valves.

4.3 Pressure Drop

4.3.1 Fuel Injector

The pressure drop across the new fuel injector, as measured between the inlet flange and the furnace, at the respective elevation, will be no greater than with the existing burner. The new fuel injectors will not limit boiler load.

4.3.2 Secondary Air

Windbox pressure will not exceed 2" W.C., with overfire air ports (to be supplied by others) open

Note: ABT will supply appropriate secondary air duct and windbox turning vanes and baffles to minimize secondary air mal-distributions to the windboxes and instabilities within each windbox.

4.4 NO_x

ABT guarantees that NO_x will not exceed 0.33 b/10^6 Btu, with overfire air ports closed, at the design excess air of Section 4.6 and 100% MCR.

ABT predicts that NO_x with OFA ports open, with a flow of 20% of the total combustion air, will be less than 0.25 lb/MBtu.

NO_x is a function of several fuel variables, primary among them is fixed carbon to volatile matter (FC/VM) ratio and % fuel-bound nitrogen. Figure 4.1 represents the change in NOx guarantee parametrically in FC/VM against fuel nitrogen content as lb. $N_2/10^6$ Btu.

Note: The guarantee point represents the fuel properties specified in Section 4.9: 1.2% N_2 and 11.500 Btu/lb corresponds to 1.04 lb $N_2/10^6$Btu.

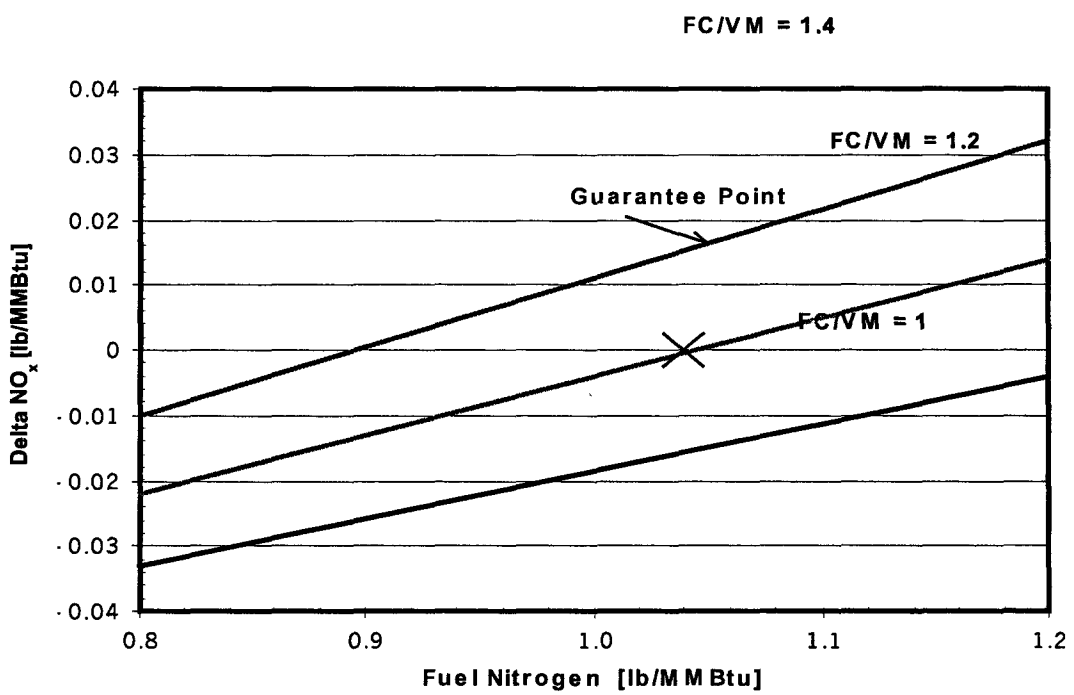

Figure 4.1 Change in NOx vs. Fuel Properties

Short-term periodic exceedances will be permitted provided the NO_x level returns below the guaranteed level after the unit stabilizes. This is necessary to accommodate potential NO_x variations during rapid load changes and while mills are coming in and out of service.

NO_x performance testing should be performed with both the CEMs and the economizer exit grid in operation. If the low NO_x system fails as indicated by CEMs but is within guarantee by the economizer exit test instruments, the latter shall govern and the CEMs shall be recalibrated against the test instruments.

4.5 CO

CO will not exceed an average of 200 ppm, with overfire air ports closed, at the boiler excess air as specified in Section 4.6 over boiler steam temperature control range, provided the fuel/mill conditions of Section 4.9 are met and that secondary air flows in each duct are steady and approximately equal (flow variations caused by plugged or unbalanced air pre-heaters are to be minimized).

4.6 Excess Air

The full load boiler excess air level at the burners will not exceed 15%. ABT will have the option of recommending a minimum O_2, across the respective boilers' steam temperature control range, at which NO_x, CO and LOI guarantees are simultaneously achieved, without deteriorating boiler performance.

4.7 Unburned Carbon Expressed as Loss On Ignition

LOI will not exceed the values obtained in pre-outage baseline testing; with overfire air ports closed with no more than 5% leakage/cooling air flow. This LOI level is guaranteed provided the conditions of Sections 4.6 and 4.9 are met; and the post retrofit LOI is sampled and measured using the same methods as in the pre-retrofit testing.

4.8 Boiler Performance

Boiler performance will not be deteriorated from the performance obtained during the baseline tests. Commercially acceptable variations in individual measured data will be acceptable (i.e., super heat temperature $\pm 10^{\circ}$ F, etc.).
Boiler efficiency will not be lower than the baseline measurements, corrected for excess air and fuel conditions.

4.9 Mill and Fuel Conditions

The above guarantees are predicated on the following:

- **Mill Performance:**
  Air Flow: The low NO_x burners will be designed to slave to the mills' operation in that the fuel injector will be sized to follow the mills' primary air flow characteristic. Consequently, ABT will design the burners for the full load primary air flow, per mill, as per the OEM mill curves, with one mill out of service at boiler full load. Primary air flow must reduce as mill load decreases. PA flow will be determined during pre-retrofit testing defined in this proposal Section 2.4.

  Coal/PA Flow Balance: The balance between coal pipes within a given mill is to be within ±10% of the mean for that mill. (ABT recognizes that this is difficult to accomplish on all mills. Consequently, we will accept one of the eight mills being outside this range, to maximum of ±15%).

- **Fineness:** 99.5% < 50 Mesh and 70% < 200 mesh; all mills simultaneously.

- **Coal Properties:** Western U.S. bituminous:
  HHV > 11,500 Btu/lb; $N_2 \leq 1.2\%$; FC/VM ≤ 1.2; Ash ≤ 12%

4.10 Burner Load Variation

The nominal burner heat input at boiler full load with one mill out of service, is approximately 192 Mbtu/hr.

The ABT low NO_x burner's flame will remain stable at a load greater than 220 MBtu/hr, and less than 95 MBtu/hr.

Maximum secondary air flow at 220 MBtu per hour and 15% excess air, with 10% OFA flow will be no less than 124, 240 lb/hr.

Minimum secondary air flow will be determined by balancing the burner stoichiometry against the overfire airflow necessary to maintain minimum NO_x. Note that 45% load is below the steam temperatures control range listed on the B&W summary performance sheet.

4.11 Ash Patterns

The low NO_x system shall not increase or adversely alter the pattern of ash deposits on the furnace walls or high temperature superheater tubing such that existing soot blowing and/or steam de-superheating sprays cannot maintain tube cleanliness or steam temperatures. Furthermore, the burners shall not cause increased buildup of slag deposits around the burner openings (i.e., eyebrows).

4.12 Remedies for NO_x , CO and LOI Exceeding the Guarantee Values

ABT is offering a low NO_x combustion system consisting of state-of-the-art low NO_x burners. Since there are no technical combustion remedies currently available to correct a failure to meet specific combustion guarantees (if there were ABT would have included them within the original design) specific remedies are proposed.

Although we expect to meet the offered guarantees, we are proposing the following remedies in the event that NO_x/LOI/CO levels are not attainable.

4.12.1 Financial Remedies

a) NO_x Remedy

In the event that the NO_x guarantee is exceeded during the performance test and there are no combinations of burner adjustments that reduce the NO_x level to within the guarantee value, ABT will be permitted to adjust excess O_2 to reduce the NOx level to within the guarantee level, provided the requirements of Sections 4.8 and 4.10 are simultaneously met (i.e., no deterioration of boiler performance or ash patterns).

Liquidated Damage for NO_x: In the event the NO_x guarantee is not attainable ABT shall pay a liquidated damage of $50,000 per 0.01lb$NO_x$/$10^6$ Btu

b) LOI Remedy

In the event that the UBC guarantee is exceeded during the performance test, ABT will be permitted to readjust the firing system to reduce UBC to within guarantee levels. If there are no operational remedies and the criterion for the mills' fineness, performance, and coal are being met, ABT will pay a liquidated damage of $25,000/ 0.1% UBC in the fly ash.

c) CO Remedy

In the event that the CO guarantee is exceeded during the performance test, or as a result of the NO_x remedies of 4.9.1, ABT will pay a liquidated damage according to the following formula:

CO L.D. ($) =100 [Meas. CO – Guar CO] , where CO is in ppm corrected to 3% O_2.

4.13 Vendor Equipment

ABT will pass-through to IPSC the guarantees and warrantees for vendor-supplied equipment the Vendors offer to ABT.

5.0 Pricing & Schedule

5.1 Pricing: Pricing for base scope is provided on bid form "Bid Pricing Sheet".

5.1.1 Option: Adder to Supply ABB Flame Scanners per Section 3.2...**$ 55,385.00**

All prices include freight, FOB Delta, Utah.
Pricing quoted is subject to acceptance within 120 days of date of quotation.

5.2 Payment Schedule

20% - Invoice Upon Award
20% - Upon submittal of burner general arrangement drawings.
20% - Upon commencement of burner fabrication
30% - Upon receipt of the equipment at the job site in good condition *
10% - Upon successful start-up**

Payment Terms - Net 30 days from date of ABT invoice. Payments made later than 30 after date of invoice will incur 1.5% per month interest charge.

* Early material shipment to be acceptable, with equipment storage by IPSC. The 30% payment upon receipt of equipment shall be prorated based on percent of major material items delivered.

** Retention applies to Low NO_x equipment supply only. Installation and sub-supplier equipment and services are excluded from retention.

5.3 Delivery Schedule

The following schedule is based upon an award date of September 5, 2003.

a)	Award -	9/5/03
b)	Burner Drawings for Review and Initial Procurement -	11/03/03
c)	Commence Fabrication	12/01/03
d)	Commence Equipment Shipment	01/09/04
e)	Complete Equipment Shipment	02/13/04
f)	Commence Outage (see Appendix 4 for installation schedule)	02/28/04
g)	Start-up	3/24/04
h)	Optimization Complete	4/07/04
i)	Guarantee Testing Complete	4/13/04

5.4 Recommended Spare Parts

ABT does not recommend any spares associated with the fuel injector or burner register assemblies as there is low risk of failure and our customers have not seen the need for stocking any of the associated parts. The longest lead parts are castings, for which we maintain the patterns, that can be supplied within 1- 2 weeks.

Reference Appendix A-2 of this proposal for Flame Scanner System recommended spares lists.

IP7_032435

IP7_032436

6.0 EXCEPTIONS AND CLARIFICATIONS

6.1 PART A DIVISION A1: NOTICE

1. Bid Validity:

   Bid Validity: 120 days required
   Delivery, February 23, 2004
   Release, September 5, 2003] 24 weeks

   Delivery will delay day by day for each day contract release extends beyond 9/5/03.

2. Performance Bond

   A construction performance bond in the amount of 50% of the installation cost shall be supplied, if requested, the cost of which is approximately $15,000.00. This bond will terminate upon successful completion of the installation and customer acceptance.

   Instead of a 10% performance bond for equipment, ABT requests that IPSC use 10% retention to be released upon successful performance testing of the boiler.

6.2 PART B - DIVISION B1: INSTRUCTIONS TO BIDDERS

9. Award of Contract:

   If ABT is awarded this contract we would commence design work immediately, not upon execution of the contract by IPSC.

12. Performance Bond:
    Please see comment 2, Section

6.3 DIVISION B2, SUPPLEMENTARY INSTRUCTIONS TO BIDDERS

Article 2: Incentives and Liquidated Damages

2nd Paragraph: Change to read: For completion ---- Contractor will be awarded $50,000 per day bonus.

3rd Paragraph: Change to read: For incomplete -------will be assessed $50,000 per day of delay.

Additional Clarification to Spec. 45606

6.4 Part C-Division 3

1g. Bid form, Spec Page C-2, submitted with our proposal listed the max. and min. limitations of our offered equipment as being 2000^0 F and 140^0 F for the "Burner Tip" and "Scanner Electronic", respectively. Our design for specific components is based on their expected temperature exposure with the following limitations:

Component Description	Material Limitation, ^{0} F
Those exposed to direct furnace radiation, i.e. flow divider, spin vanes, throat casting, register front cone, fuel injector tip and flame stabilizers.	2000
Those semi-shielded from furnace radiation i.e. fixed vane spinner and inner zone damper perforated plate.	1600
Those shielded from furnace radiation, set back from furnace opening, and exposed to maximum windbox temperature, i.e. register sleeve dampers, register backplate, windbox coverplate, fuel injector barrel, elbow flatback and fuel distributors.	750

Explanatory Comment: The reason we stated that there are no environmental limitations to the coal burners is that the stainless steel castings and plate facing the fire, ASTM 297 Gr HE or 309 will not deteriorate at temperatures of at least 2000 F. We have never measured tip temperatures above 1600 F, in pre-NSPS furnaces that have input per plan levels as high as 2.3MBtu/hr/ ft^2 and Furnace Exit Gas Temperatures or 2400F and firing Eastern bituminous coals. These are a good deal higher than Intermountain and generate higher gas temperatures.

Consequently, we do not consider that operation of our design in your boiler to have any environmental limitations: the conditions are such that no material will operate anywhere near its limit. In fact we have placed no such limitations on any retrofit we have done.

1h. We will not require any special modes of operation in that the existing burner controls should not require changes. Burners will be setup during optimization (at 100% MCR) which will begin with components at predetermined positions similar to the following example:

Burner Secondary Air Sleeve Dampers (SAD)	80% Open
Burner Outer Air Registers Spin Vanes	40% Open
Burner Inner Air Sleeve Damper	20% Open

Following start-up these components are used to control the shape and ignition point of the flame, which in turn controls NOx, O2 distribution and CO emissions. The final settings are tabulated and provided to the customer for future reference. During normal operation, following optimization, further adjustments should not be necessary unless a significant change in fuel supply characteristics occurs.

In no case have we required any customer to modify normal procedures to accommodate our burners. However, as noted in the guarantee section, we do require good fuel balance in the coal pipes, accurate primary air flow measurement and control and that the Primary air flow decrease as mill load decreases. We do not consider these to be "special modes of operation"; rather good operation.

Delete: "In the event the burner supplier does not provide for the installation---- penalty clause applies:"

Change boxed clause to read: "For delivery of all burner ------ components contract price". Delete last sentence.

Delete remainder of Section 2.

ABT anticipates shipments to the IPP job site will begin in early January, prior to installation contractor arrival on site. In case of early shipments, IPP would be responsible for off loading and storage of equipment.

6.4 PART C - DIVISION C3

Bidding Documents - Additional bid

1 b. There are no normally recommended or required spares. However, the plant may choose to have our fuel injector assembly (barrel & nozzle) on site in the event that a burner might be damaged by some external cause.

g. There are no environmental limitations to the coal burners

h. The coal burners will slave to the mills. There are no special modes of operation.

i. There are no special maintenance requirements. ABT suggests that, fly ash be cleaned from adjustable register components at the commencement of an outage if the boiler is to be water cleaned.

j. There are no required boiler modifications to accommodate the new burners.

6.5 DIVISION E1, GENERAL CONDITIONS

Article 5: Fabrication drawings and burner design calculations will not be supplied however will be available at the fabrication shop, or at our engineering office, for reference during visits by IPSC.
Drawings anticipated for delivery to IPSC include:

a.General Arrangement Drawings showing equipment arrangement.
b.Field Installation Drawings.
c.Instruction manuals for supplied equipment.

Article 13: Add at end of paragraph, "In no event shall Contractor be liable, whether in contract, tort (including negligence), warranty, strict liability, or any other legal theory, for any indirect or consequential damages, such as, but not limited to: cost of capital; loss of anticipated profits or revenue; loss of use or increased expense of using equipment or plant; loss of power or production; cost of purchased or replacement power or production; or claims of customers for loss of power or production."

6.6 DIVISION E2, ADDITIONAL GENERAL CONDITIONS

Article 1: ABT's offer is based on Warranty and Guarantee conditions as written in Section 4 of the Proposal.

6.7 DIVISION F1, DETAILED SPECIFICATIONS - SPECIAL CONDITIONS

Article 3: Delivery
Add: Notwithstanding the above, IPSC agrees to accept early delivery of burners if ABT's shop is ready to ship. Burners will be stored indoors at the site and unloaded by IPSC.

Article 6: General ABT Clarification on Insurance
The following clarifications to specific portions of this article are made regarding our current insurance coverage which has been satisfactory to all our customers' requirements. We therefore have not included additional premiums, associated with higher limits, in our pricing for this proposal. Should our current limits be unacceptable to IPSC, and we must raise them for an IPSC contract, the difference in ABT's premium would be added and billed to IPSC at cost.

Article 6a: Workers Compensation/Employers Liability: (revised requirements)
beginning on 4th line, strike words beginning with "Voluntary" through end of this sentence.
Beginning 11th line, strike words beginning with "waiver of subrogation " through the end of this paragraph.

Article 6b: Commercial General Liability: (revised requirements)
Line 5 and 7 strike "$5 million", replace with "$2 million",
Line 6, strike words "and be specific for the contract",
Line 9, strike 'IPSC's", replace with "standard",
Beginning on Line 10, strike the words "or an endorsement of the policy acceptable to IPSC"'
Strike all of subparagraphs "(2)", "(3)", and "(5)".

Article 6c: Commercial Automobile Liability: (revised requirements)
Next to last line, strike words "as required" and replace with "revised requirements"

Article 6d: Professional Liability: (revised requirements)
2nd line strike words "with Contractual Liability included,",
4th line strike "$5 million", replace with $1 million",
Beginning on 5th line strike the entire sentence beginning with "Evidence", replace with "Such insurance may be an endorsement to the Commercial General Liability Policy without separate aggregate."

Article 6e: Other Conditions: (revised requirements)
Strike entire subparagraph (1)
In subparagraph (2) Line 2 insert the word "revised" between the words "these" and "insurance".

6.8 DIVISION F2, DETAILED SPECIFICATIONS - DETAILED REQUIREMENTS

Article 5e: ABT supply includes two thermocouples, each with its own terminal block head mounted on the burner windbox cover plate. The heads will have a removable cover for IPP access to terminals for remote temperature indication of fuel injector tip and barrel.

Article 5l: ABT supply includes one port per burner assembly with observation glass to view flame. Each port will be equipped with purge air connection and ball valve should the need arise to purge the view pipe.

7.0 The Opti-Flow™ Low NO_x Burner

7.0 The Opti-Flow™ Low NO_x Firing System

Advanced Burner Technologies' Opti-Flow™ low NO_x burner, which contains the fuel injector and dual register, is installed as a "plug-in" module. The existing burner throat opening in the water wall is used, as are the present support rails. In addition, we maintain the same opening in the windbox. No pressure part modifications or windbox modifications are required. All components are shop installed including the airflow elements, associated tubing and fittings.

ABT has developed an elbow-based fuel distribution system, which yields nearly uniform distribution of coal at the burner tip. These components are installed in the existing ceramic lined sweep elbow. All of the wear surfaces of these components are protected with ceramic wear materials.

Since its conception, ABT has constantly striven to produce a better Low NO_x combustion system. We consider all aspects of the system from combustion products (low NO_X, CO, & LOI), the effects on the furnace (slagging, fouling, and water wall corrosion), and the cost both from the purchase price to the O&M budget. We take seriously comments from the customer, the installation labor, and operational difficulties. As part of this effort, we have continually simplified the burner, both the register and the fuel injector.

7.1 Opti-Flow™ Low NO_x Burner

a) Fuel Injector Sub-Assembly

The fuel injector, a novel ABT Opti-flow™ design with a segmented nozzle and a fuel distributor, is made from highly wear resistant ceramic components, mounted in the elbow.

There are no internal devices in the fuel injector, other than the flow distribution devices in the elbow, that could cause coal layout or require periodic maintenance.

The components and their functions are briefly described as follows:

- Flow Distributor: A fuel distribution device in the elbow breaks the rope formed in the coal piping in order to provide uniform fuel distribution at the nozzle. A more complete discussion, "Opti-Flow™ Distribution System for Elbow-Based Fuel Injectors", is contained in section 7.2.

- Opti-Flow™ Low NO_x, Flame Stabilization Nozzle: This is the key element for attaining excellent flame stability and minimum NO_x. Figure 7.1, shows the segmented coal nozzle, which has an open design with no obstructions to collect coal. Pressure drop is low, and there are no components in the coal path that are subject to wear, coal accumulation or coking. Excellent flame

stability is achieved due to the external flame stabilizers surrounding each segment.

- Inner Air Zone Swirler: This fixed vane swirler is attached to the outer barrel of the fuel injector. The position of the swirler is fixed and no adjustments are required.

A schematic of the Opti-Flow™ dual register is shown in Figure 7-2.

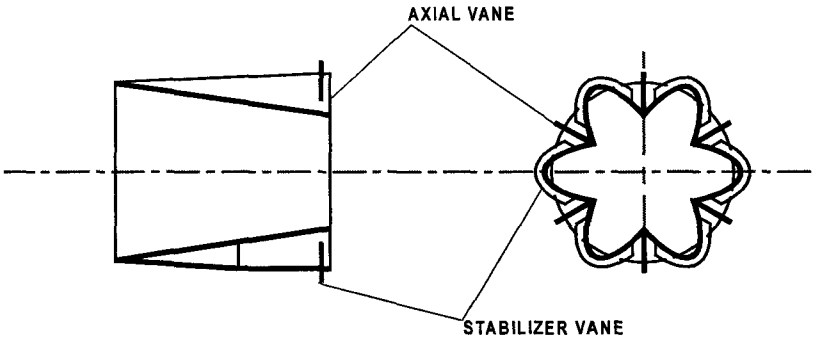

Figure 7.1 Opti-Flow™ Coal Nozzle

b) Opti-Flow™ Dual Register Assembly

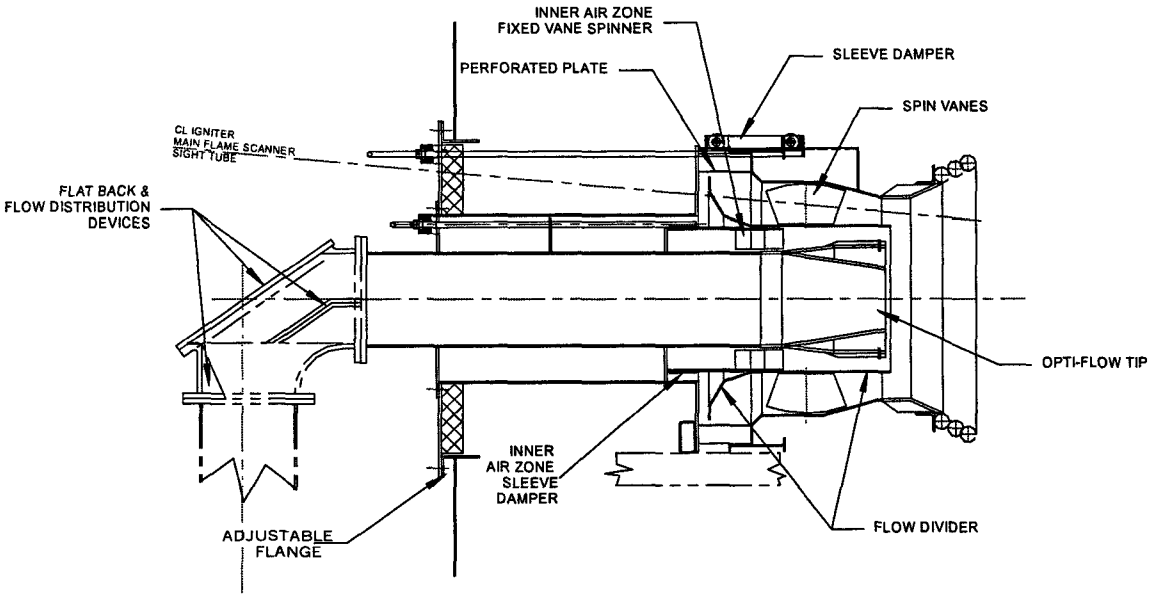

Figure 7.2 Opti-Flow™ Dual Register Assembly

Key features of the Opti-Flow™ dual register sub-assembly include:

- Sleeve Damper: Air flow to each burner is controlled by a manually operated sleeve damper. This damper is used to balance the air flow between burners. The vanes are manually adjustable from the burner front to optimize the secondary air swirl in the outer zone.

- Inner Air Zone Damper: The sleeve damper is axially adjustable to vary the ratio of airflow between the inner air zone and the outer air zone. This is a manual adjustment made during optimization.

  Mechanically the damper is very simple. Because of its smaller size and weight, it rides on two stainless steel rods and is actuated by a push/pull rod. It is welded to the actuator rod to prevent any cocking of the sleeve.

- Outer Spin Vanes: The vanes are manually adjustable from the burner front to optimize the secondary air swirl in the outer zone. The actuator is two manually operated push/pull rods, which translate a "bull ring", moving linkages which rotating all of the spin vanes. This system has no components subject to binding by ash deposits and has little hysteresis.

- Low pressure drop register: The register has been designed for low pressure drop by the addition of turning vanes in the outer air zone and lower velocities in the spin vane section.

- Burner front plate flange: Flange adjusts to accommodate distortions in the windbox plate and it allows the burner throat casting to be located in the throat, regardless of furnace wall or windbox location. The bolted joint can be convenient, in the future, for removal of the burner module for maintenance.

7.2 Opti-Flow™ Fuel Distributor

Unbalanced fuel distribution leaving the coal nozzle tip and the resultant operating problems are caused by similar deficiencies in all pulverized fuel injectors. Coal is separated from its carrier (primary) air inside the inlet device, be it scroll, elbow, or 90° turning head, resulting in "roping" of the coal inside the primary stream. Redistributing the "rope" downstream of the inlet has been an inherent problem with burner designs. ABT's method of improving fuel distribution consists of a system of several interrelated components.

Advanced Burner Technologies has developed an elbow-based fuel distribution system, which yields nearly uniform distribution of coal at the burner nozzle's exit. This system reduces the fuel imbalance that occurs in standard elbow-based fuel injectors by a factor of approximately 4.5 to 1; and by over 3 to 1 as compared to other types of burner inlets (i.e., scrolls or t-type heads). Figure 7-3 illustrates the results of our two-phase physical flow modeling with a standard 90°-flatback elbow. The distribution system is also designed to accommodate sweep elbows.

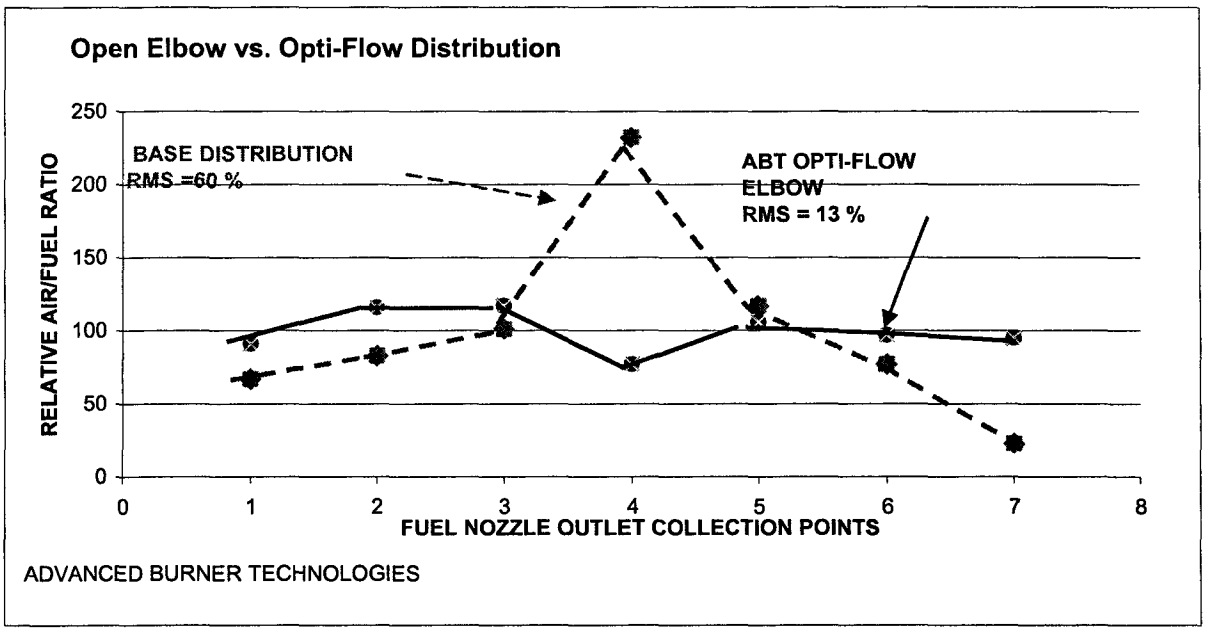

Figure 7.3 Comparison of Open Elbow and Opti-Flow™ Distribution

Baseline testing was performed with an open elbow and fuel nozzle in order to determine the uncontrolled distribution of particles at the outlet of the nozzle. A seven-point collection matrix was used: six points around the circumference and one collection point on the axis. As expected, the fuel distribution was severely unbalanced with an RMS value of 60% of the mean. The Opti-Flow™ modifications

resulted in a significant improvement. The RMS value was reduced to 13% of the mean - an improvement of 4.62 over the baseline. Existing elbow-based fuel injectors that contain conical diffusers suffer from fuel imbalances of 36% RMS. In this case, the Opti-Flow™ system yields a 3 to 1 improvement in fuel distribution.

Severe fuel imbalance can result in the following problems:

- High-unburned carbon
- Long flames
- Flame instability problems.
- NO_x control problems

The significant improvement in fuel distribution provided by the Opti-Flow™ system will correct these problems to the extent that they are caused by fuel imbalance within the coal nozzles. Other fuel distributors cause coal "ropes" to impact on the coal nozzle and, thereby, reduce the nozzle's usable life. In the ABT design, all wear is limited to the wear-resistant devices in the elbow
The Opti-Flow™ system eliminates coal ropes and produces a nearly uniform fuel/air mix with axial flow downstream of the elbow. Therefore, the only erosion-prone areas will be located within the elbow. These areas will be lined with erosion-resistant materials and will be easily replaceable when necessary. A further advantage of this fuel distribution system is that, when used in conjunction with the Opti-Flow™ segmented nozzle, NO_x can be reduced compared to existing nozzles used for tangential firing.

The Opti-Flow™ Fuel Distribution System consists of:

1. The existing coal elbow with ABT's distributor vane package installed to break the coal rope formed in the fuel piping. All surfaces, including the leading edges are protected with ceramic tile.

2. A ceramic device at the coal elbow inlet will be used in conjunction with distributor vanes for equalizing coal flow to the tip.

7.3 IMPLICATION FOR FIELD RESULTS

Within a flame of a low NO_x burner, poor fuel distribution around the nozzle's circumference results in degraded emissions and efficiency performance. Optimal combustion - minimum NO_x and minimum unburned carbon, simultaneously - occurs when the circumferential fuel distribution is uniform (assuming primary air and secondary air distribution are also uniform). When this condition exists, the environment surrounding all fuel particles is the same and, therefore, results in uniform combustion conditions.

IP7_032448

However, in practical operation, there are several conditions both external and internal to the fuel injector that precludes uniform fuel distribution. As a result, this prevents uniform air/fuel (stoichiometric) conditions within any flame from being attained.

Externally, non-uniform fuel flow inside the coal pipe, upstream of the fuel injector's inlet, causes imbalances further downstream within the fuel injector.

Internally, all burners, regardless of inlet type, develop unbalanced coal flow that yields wide variations in stoichiometry within the flame. Stratification that causes high fuel flow will result in very low stoichiometric zones in the flame. On the other hand, stratification that causes low fuel flow will result in very high stoichiometric zones in the flame. The former generates high-unburned carbon levels; the latter generates high NO_x levels.

Since both unburned carbon and NO_x generation are non-linear functions of oxygen availability (stoichiometry), the high and low stoichiometric portions of the flame do not compensate each other for their respectively high NO_x/low UBC and low NO_x/high UBC levels. The consequence of this effect is that the unbalanced flame generates NO_x and UBC levels that can be significantly higher than anticipated.

Table 7-1 compares the minimum and maximum relative fuel flows of the Base-Std OEM design and the Opti-Flow™ design to perfectly balanced conditions. The resultant local flame stoichiometries and relative effects on NO_x and UBC levels are also tabulated.

TABLE 7-1
Standard vs. Opti-Flow™ Burner:
Effect of Fuel Imbalance on Relative NO_x & UBC

Condition	Fuel Flow (Relative)	Local Flame Stoichiometry	Relative NO_x	Relative UBC
Base-Std	Min. 0.61 Max. 1.59	1.97 0.75	>>1.0 <1.0	<1.0 >>1.0
Opti-Flow™	Min. 0.90 Max. 1.22	1.33 0.98	1.0+ 1.0-	1.0- 1.0+
Perfect Balance	1.0	1.2*	1.0	1.0

*Assumes 20% excess air operation (stoichiometry = 1.2)

Based upon these comparisons, it is reasonable to predict that, all other operating parameters and conditions being equal, the Opti-Flow™ low NO_x fuel injector will produce lower NO_x and lower Unburned Carbon than a standard burner.

Field retrofits on large utility boilers have confirmed this analysis: NO_x has been reduced 40% below the levels attained with the OEM's burner, while unburned carbon has not been increased.

DISCLOSURE NOTICES
1. THE INFORMATION CONTAINED IN THIS DRAWING IS THE SOLE PROPERTY OF ADVANCED BURNER TECHNOLOGIES. ANY REPRODUCTION IN PART OR WHOLE, WITHOUT THE WRITTEN PERMISSION OF ADVANCED BURNER TECHNOLOGIES IS PROHIBITED.
2. THE STRUCTURE AND OPERATION OF THE OPTI-FLOW FUEL DISTRIBUTION SYSTEM AND DUAL REGISTER ARE THE SUBJECT OF ONE OR MORE U.S. PATENT APPLICATIONS.

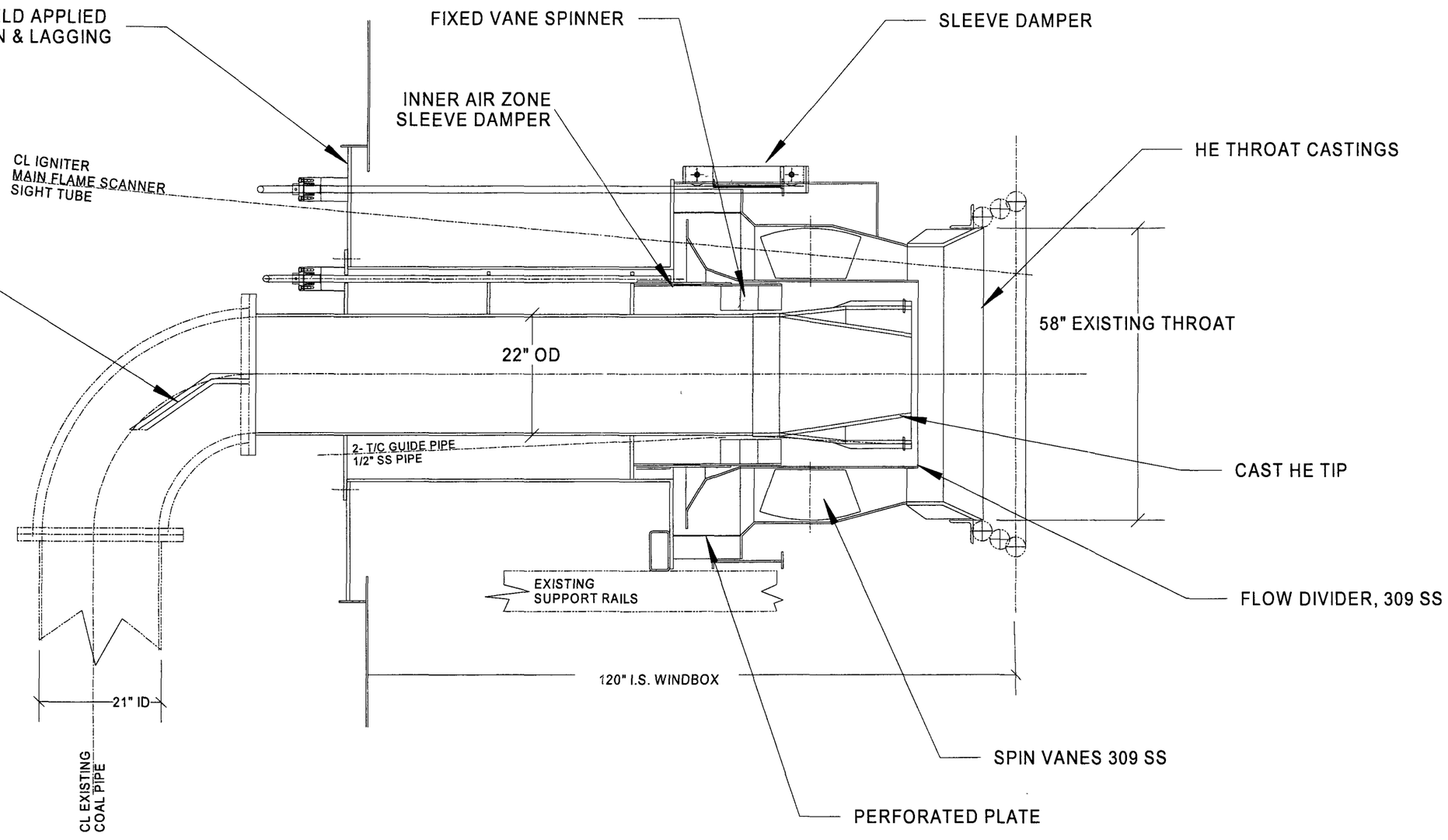

INSTALLATION INSTRUCTIONS

1 REMOVE ELBOW-SHIP TO SHOP FOR INSTALATION OF DISTRIBUTION DEVICES
2 REMOVE EXISTING BURNER AND FLANGE RING
3 REMOVE EXISTING SEAL RING AT FURNACE WALL
4 INSTALL NEW BURNER ASSEMBLY, CENTER IN THROAT, LEVEL, AND LOCATE END OF THROAT AT CL OF LAST TUBE
5 SHIM BETWEEN SUPPORT BAR AND EXISTING RAILS
6 SEAL WELD INSTALATION RING TO WINDBOX
7 INSTALL SEAL RING AND WELD TO WALLBOX
8 INSTALL IGNITERS AND MAIN FLAME SCANNER
9 REINSTALL REWORKED ELBOW

By	REMARKS	DATE	No.
	REVISIONS		

TOLERANCES, UNLESS SPECIFIED	MACHINED	WELD FABRICATIONS
UP TO 6"	± .016"	± .060"
6" TO 12"	± .031"	± .090"
12" TO 24"	± .045"	± .125"
OVER 12"	± .060"	± .125"

SURFACE ROUGHNESS NOT TO EXCEED 125

BREAK SHARP CORNERS

DO NOT SCALE PRINT

CAD GENERATED DRAWING DO NOT MANUALLY UPDATE

APPROVALS		DATE
DRAWN	CCO	11/15/02
CHECKED		

ADVANCED BURNER TECHNOLOGIES
350 MAIN STREET, SUITE 5
BEDMINSTER, NJ 07921
Phone 908-470-0470
FAX 908-470-0479
www.advancedburner.com

INTERMOUNTAIN POWER SERVICE CORPERATION

ABT PROPOSIAL NUMBER Q02003

SIZE B | DWG NO. Q03013-10 | REV 1

CAD FILE

IP7_032451

A-2 - 7

IRIS SYSTEMS INC.
1701 W. Northwest Highway, Grapevine, TX, 76051
Tel: 972-539-0889 Fax: 972-539-6379

Wednesday, August 20, 2003

Advanced Burner Technologies
350 Main Street, Suite 5
Bedminster, NJ 07921

Attention: Sal N. Ferrara

Subject: IPSC Unit 2, Low NOx Burners
ABT proposal # Q03013
IPSC Spec 45606

We are pleased to submit the following proposal per your inquiry.

I would like to point out a special additional value we are providing on this project. We propose to provide, included in the pricing for this project: *an extended warranty of three years from shipping or two years from startup*. In addition, please know that IRIS provides a 100% guarantee in discrimination.

Since you are buying new burners, this should allow you to properly sight the scanners. This is based upon the burner design allowing room for proper sighting. In turn, this will allow you to detect both the main flame and the igniter using only one scanner. Our pricing is based upon 48 loops. If, for any reason, you decide that you need to include an additional scanner per burner, you would need to double the hardware pricing.

The IRIS flame scanners are network capable. IRIS has its own software called Flame Tools, which will allow you to calibrate and adjust the scanners remotely, along with trending, cataloging, and graphing. This software is included in our pricing. The flame scanners are capable of communicating in all versions of Modbus.

IRIS scanners only require 5 CFM over furnace pressure for cooling air.

We would like to submit the following breakdown in scope of supply.

Item 1	Description	Qty.
IR-P532	Dual IR/UV controllers (AC, 120 Vac)	24
IR-S552	Infrared viewing heads	48

Item 2	Description	Qty.
Burner Front Amplifier Cabinet	Each cabinet comes with breaker, fuses and flame light indication for (4) main flame scanners. Each cabinet will accommodate two IR-P532s. Scanner cabinets will be mounted in the same location as the existing cabinets.	8

Item 3	Description	Qty.
Scanner Mounting Kits	Each kit includes cooling air Y and shut off valve, and adapter plate	48

Item 4	Description	Qty.
Detector Cable	4 conducted braided shielded cabling is required for our scanners. Exact runs for cabling is known however the price per foot is $ 1.96. For pricing purpose we assumed 50 ft per scanner.	48

Item 5	Description	Qty
Start-up Services	A. Per your specifications; first trip, two weeks (five-day week, 8 hour days), travel and expenses included. B. Per your specifications: Second Trip, One week (five-day week, 8 hour days), travel and expenses included C. Per your specifications: Two onsite train classes, (for the duration of not less than 10 hours total.)	N/A

(Any additional service required, please see our attached field service rate schedule.)

Option (**adder to base price**)	Description	Qty.
Recommended Spare Parts	We recommend (2) IR-P532 and (2) IR-S552	4

The price for (2) IR-P532 & (2) IR-S552 is.....$ 9,500.00

All prices are good for 120 days.
FOB: Delta, Utah
Freight: Included (except freight for spares will be pre-paid and billed at cost)
Terms: Net 30
Lead time: 4-6 weeks

I would like very much to provide a presentation. That would allow me to answer in person any questions or concerns you may have. At your convenience, please contact me to set up a date and time. I look forward to hearing from you, and once again, thank you for allowing me to provide this quote.

Highest regards,

Walter F. Collins
Diamond Systems / IRIS
1701 W Northwest HWY
Grapevine, TX 76051
(972) 539-0889
Fax (972) 539-6379

FIELD SERVICE RATE SCHEDULE

	Field Service Engineer	Project/Software Engineer
Per Day Rate	$1020.00	$1300.00
Per Hour Rate	$127.50	$ 162.50
Time and One-Half	$191.25	$ 243.75
Double Time	$255.00	$ 325.00

1. Time and one-half applies to all work performed after 8 hours per day or on Saturday.
2. Double time applies to all work performed on Sundays, holidays, and work after 12 continuous hours.
3. DSI personnel are not required to work more than 12 hours in any 24-hour period.
4. All weekday travel time is chargeable per the above notes. (time and one-half maximum)
5. All weekend travel time is chargeable per the above notes.
6. Eight-hour minimum charge for all one-day service calls with four-hour minimum per day thereafter.
7. Offshore (at sea, platform) rates are an additional $100 per day.
8. Field Service time, if put on "hold", at job-site or hotel, will be charged at the regular daily rate plus expenses.

DSI Holidays:

New Year's Day	President's Day	Memorial Day
Day before Independence Day	Independence Day	Labor Day
Thanksgiving Day	Day after Thanksgiving	Christmas Eve Day
Christmas Day	New Year's Day	

Workday Defined:
The above charges are for a normal eight-hour day with time and one-half charged for Saturdays, and time over eight (8) hours for a weekday; Sundays, holidays and work after twelve (12) continuous hours will be charged at double time. In addition the travel and living expenses will be billed at cost. DSI will supply receipt and documentation for the substantiation of reasonable travel and living expenses. These shall include (1) air travel receipt, if used, (2) hotel receipt, if used, and (3) car rental receipt, if used. No other receipts for living expenses will be furnished unless specifically requested by the purchaser in writing prior to the start of the assignment.

Time Sheets:
Before the work commences, satisfactory arrangements must be made with DSI to review and sign Daily Time Sheets. It is suggested that customer submit a written document to DSI stating whether the customer or their authorized representative will be signing the time sheets. Disputes of any nature should be immediately reported, in writing, to DSI. Approval and acceptance of the work will be assumed, if no arrangements have been made to sign the time sheets, and invoicing will be submitted accordingly. Once signed, the time card is considered as acceptance of the work performed.

Travel Expenses:

Airfare	At cost
Auto Rental	At cost
Mileage	(.35/mile)
Tolls	At cost
Parking	At cost

Living Expenses:

Motels and meals, etc..	At cost

Copies of travel and living expense receipts will be submitted with the field service invoice.

Terms of Payment:
Field Service Invoices are due and payable upon receipt.

ALLEGHENY POWER ALBRIGHT, WV	STEAM GENERATOR, RILEY STOKER CORP. TWELVE (12) BURNER, LOW NOX , BURNING PULVERIZED COAL, NATURAL GAS, & #2 OIL FRONT WALL FIRED
AMERICAN ELECTRIC POWER CO PICWAY STATION	STEAM GENERATOR, 16 RILEY LOW NOX, BURNERS, TYPE 90 CCV, #3A. NATURAL GAS & PULVERIZED COAL
AMERICAN ELECTRIC POWER CO COSHOCTON, OHIO	STEAM GENERATOR, 16 RILEY LOW NOX, BURNERS, TYPE 90 CCV, #3A. NATURAL GAS & PULVERIZED COAL
BOARD OF PUBLIC UTILITIES NEARMAN CREEK PLANT KANSAS CITY, KANSAS	STEAM GENERATOR, PULVERIZED COAL, NATURAL GAS, RILEY STOKER "TURBO" UNIT, 18 BURNERS OPPOSED FIRED
CENTRAL ILLINOIS LIGHT & POWER CO. EDWARDS STATION PEORIA, IL	STEAM GENERATOR, RILEY STOKER, SIXTEEN BURNER IN FRONT WALL, BURNERS ARE FOSTER WHEELER LOW NOX TYPE BURNING PULVERIZED COAL WITH #2 OIL IGNITORS.
CENTRAL ILLINOIS LIGHT & POWER CO. EDWARDS STATION PEORIA, IL	16 IRIS MODEL S506 UV, 16 IRIS MODEL S512 IR VIEWING HEADS c/w MODEL P522 SIGNAL PROCESSORS.
COLORADO UTE ELECTRIC ASSOC. HAYDEN STATION	STEAM GENERATOR, 18 BURNERS, FRONT FIRED, PULVERIZED COAL WITH GAS ELECTRIC IGNITION
COMMONWEALTH ELECTRIC CO. SANDWICH STATION, MA.	STEAM GENERATOR, UNIT 1, FOSTER-WHEELER OPPOSED FIRED, 48 BURNERS (3 PER CELL), #6 OIL.
CRISP COUNTY POWER CORDELE, GEORGIA	STEAM GENERATOR, PULVERIZED COAL NATURAL GAS, B &W, 4 BURNERS
DIDCOT POWER STATION OXFORDSHIRE, UK	3 STEAM GENERATOR WITH 48 BURNERS EACH, GAS/OIL/COAL, B&W LOW NOX GAS ADDED. FRONT AND REAR FIRED, WITH 48 P520, S506 UV & Eexd HOUSING
ENTERGY WATERFORD STATION KILLONA, LA UNITS No. 1 & 2	18 BURNERS EACH GAS AND OIL FIRED. 72 IRIS MODEL S550 DUAL UV/IR VIEWING HEADS c/w MODEL P520 SIGNAL PROCESSORS AND HARDWARE.
FAIRCHILD AIR FORCE BASE SPOKANE, WASHINGTON	STEAM GENERATORS, UNITS 1, 2 & 3 RILEY STOKER UNITS FIRING OIL AND PULVERIZED COAL
GULF STATES UTILITIES SABINE STATION	STEAM GENERATORS, UNITS 1 & 2 C.E. TILTING TANGENTIAL CORNER FIRED UNITS, 24 BURNERS FIRING NATURAL GAS
GULF STATES UTILITIES NELSON STATION	STEAM GENERATOR, UNIT 1, C.E. TILTING TANGENTIAL CORNER FIRED NATURAL GAS
GULF STATES UTILITIES NELSON COAL #6 WESTLAKE, LOUISIANA	STEAM GENERATOR, C.E. TILTING TANGENTIAL CORNER FIRED UNIT, PULVERIZED COAL, 24 BURNERS
IOWA/ILLINOIS GAS & ELECTRIC DAVENPORT	STEAM GENERATOR, C.E. CORNER FIRED WITH RILEY LOW NOX BURNERS. PULVERIZED COAL & NATURAL GAS. 16 MAIN BURNERS. TWENTY-EIGHT GAS IGNITORS. IRIS 500 WITH FIBER OPTIC LIGHT GUIDES. IRIS 300 FOR IGNITER DETECTION.

IOWA PUBLIC SERVICE NEAL STATION #1 SERGEANT BLUFF, IOWA	STEAM GENERATOR, FOSTER-WHEELER, TWENTY-FOUR (24) BURNERS, OPPOSED FIRING, PULVERIZED COAL AND NATURAL GAS, WITH GAS ELECTIC IGNITORS.
MIDWEST POWER CO. NEAL STATION #2 SERGEANT BLUFF, IA	STEAM GENERATOR, SIXTEEN (16) BURNERS, FOSTER-WHEELER, PULVERIZED COAL, NATURAL GAS & #2 OIL.
MONTANA-DAKOTA UTILITIES CO. OTTERTAIL STATION, SD	STEAM GENERATOR, HONEYWELL IAC 24 BURNERS, OIL AND PULVERIZED COAL, IRIS MODEL P520'S, 12 S512 AND 12 S512E'S WITH FIBER OPTICS ON IGNITORS, IRIS P520 ON THE AUX BOILER.
NEW ENGLAND POWER CO. SALEM HARBOR #3	STEAM GENERATOR, 16 LOW NOX RILEY BURNERS, TYPE CCV, PULVERIZED COAL & #6 OIL. IRIS P520 WITH INFRARED VIEWING HEADS.
NEW ENGLAND POWER CO. SALEM HARBOR #2	STEAM GENERATOR, 12 LOW NOX RILEY BURNERS, TYPE CCV, PULVERIZED COAL & #6 OIL. IRIS P520 WITH INFRARED VIEWING HEADS.
NEW ENERGY CORPORATION SOUTH BEND, INDIANA	STEAM GENERATOR, RILEY "TURBO" UNIT FIRING PULVERIZED COAL, #6 OIL AND NATURAL GAS, WASTE FUEL
PACIFIC GAS & ELECTRIC CO. CONTRA COSTA	STEAM GENERATOR, 24 LOW NOX TODD BURNERS, NATURAL GAS AND #6 OIL
PENNSYLVANIA POWER & LIGHT CO. SUNBURY #3	STEAM GENERATOR, 12 LOW NOX RILEY BURNERS TYPE CCV, PULVERIZED COAL AND #2 OIL IGNITORS.
PENNSYLVANIA POWER & LIGHT CO. SUNBURY #4	SAME AS SUNBURY 3.
PENNSYLVANIA POWER & LIGHT CO. MARTINS CREEK #1	SAME AS SUNBURY 3.
PENNSYLVANIA POWER & LIGHT CO. MARTINS CREEK #2	SAME AS SUNBURY 3.
SIGECO A.B. BROWN STATION MT. VERNON, IN	24 BURNERS COAL FIRED. IRIS MODEL S552 IR VIEWING HEADS c/w MODEL P520 SIGNAL PROCESSORS FLAMETOOLS SOFTWARE
SIGECO F.B.. CULLEY STATION NEWBURGH, IN	24 BURNERS COAL FIRED. IRIS MODEL S550 UV/IR VIEWING HEADS c/w MODEL P520 SIGNAL PROCESSORS FLAMETOOLS SOFTWARE
TAIWAN POWER COMPANY	24 IRIS MODEL S552 IR VIEWING HEADS c/w MODEL P520 SIGNAL PROCESSORS
TENNESSEE EASTMAN CO. KINGSPORT, TENNESSEE	STEAM GENERATOR, TWELVE (12) BURNERS, LOW NOX, FRONT WALL MOUNTED, BURNING PULVERIZED COAL, NATURAL GAS & #2 OIL.
TODD COMBUSTION INC. CON ED HUDSON AVE. #100	16 TODD VARIFLAME LOW NOX GAS/OIL BURNERS IRIS MODEL 500'S

TODD COMBUSTION INC. PACIFICORP. GADSBY #1 & #2	2 UNITS 6 TODD VARIFLAME LOW NOX GAS FUTURE OIL BURNERS IRIS P520'S
TRI-STATE G & T CRAIG STATION CRAIG, CO UNITS 1, 2, & 3	120 B&W DUAL REGISTER BURNERS 120 IRIS MODEL S550 DUAL UV/IR VIEWING HEADS c/w MODEL P522 SIGNAL PROCESSORS.
ULTASYSTEMS FOR ROANOKE VALLEY PROJECT. WELDON, NC	STEAM GENERATOR, SIXTEEN (16) LOW NOX BURNERS, BURNING PULVERIZED COAL, NATURAL GAS & #2 OIL.
WISCONSIN POWER & LIGHT CO. ROCK RIVER STATION BELOIT, WI	STEAM GENERATORS, (3) BABCOCK & WILCOX, FOUR BURNERS FIRING PULVERIZED COAL.
BLACK HAWK STATION	STEAM GENERATORS (3), BABCOCK & WILCOX, FOUR BURNERS EACH FIRING NATURAL GAS.
WORSLEY ALUMINA STATION AUSTRALIA	12 P520 WITH 12 S552

IRIS SYSTEMS INC.
1701 W. Northwest Highway, Grapevine, TX, 76051
Tel: 972-539-0889 Fax: 972-539-6379

IRIS REFERENCES

1. Entergy, Louisianna Station - John Mallot - (225)354-4075
2. Central Louisiana Elect Co., Dolet Hills Station – Marty Eveans – (318) 484-7494
3. Tri-State Generation, Craig Plant, – Mark Linke – (970) 824-4411
4. Tucson Electric Power Co., Irvington Station – Scott Gurinave – (520) 745-3224
5. Entergy, Lynch and Lake Catherine, - Jeff Williams - (800)264-2535 or 0044
6. Reliant, Houston, Fred Cortez - (713) 945-7713
7. TXU, Valley Plant, Stewart Rake - (903)965-5116
8. City of Austin, Decker Creek Plant, Vance Zimmerman - (512) 505-7333, CE Unit
9. AEP/ West TX Utilities, Michael Rowell - (915) 674-7248
10. City Public Service of San Antonio, Bob Knight - (210)353-3669, CE Unit
11. AEP/Dallas, Ben Crawford - (214) 777-1406
12. City of Lafayette, Jamie Webb (337) 291-5760 Buddy Hudson (S&L) - (337)291-5779
13. AEP/Southwestern Electric, Knox Lee Plant , Scott Mankins (903)643-2651, CE Unit

If you should need additional references, please give me a call.

A-2 - A3R

August 19, 2003

ABB Inc.
Proposal No. U030304A Rev. 1

Mr. Sal Ferrara
Advanced Burner Technologies
350 Main Street, Suite 5
Bedminster, New Jersey 07921

Dear Mr. Ferrara,

ABB Inc. is pleased to offer our SafeFlame™ DFS Scanner System for use on your Low Nox Burner. We propose our SafeFlame™ visible light fiber optic scanner for monitoring the pulverized coal and class I oil lighters on forty eight (48) opposing wall fired low NOx burners. The proposed scanner is an extremely rugged field proven device with nominally 11,000 in operation around the world today. A description of the scanner system is provided in Attachment 1.

The proposed flame scanners are mounted in 2" ridged guide pipes. ABB has included with this proposal packing glands that can be welded to the new burner front plate. This will allow for removal and/or adjustment of the scanner guide pipe position in the burner.

Dimensional drawings of the flame scanner, guide pipe, and chassis are attached.

The hardware proposed below is for installation of the SafeFlame DFS electronics on each burner deck. A window kit is installed in each chassis enclosure to allow for visual access to scanner status without having to open the NEMA 4 enclosure.

BASE OFFER – SINGLE SCANNER PER BURNER

ITEM	QTY	DESCRIPTION
1	48	SafeFlame™ Fiber Optic Flame Scanner: • Cast aluminum housing • Visible light photodiode board assembly • 9 degree viewing angle lens • High Temperature fiber optic cable • ¼ turn stainless steel electrical quick disconnect on scanner

2	48	2" Ridged scanner guide pipe mounting assemblies • Stainless steel centering tip • 2" schedule 40 pipe • Cast aluminum cooling/purge air manifold
3	48	Guide pipe packing gland: • For use with 3" NPT burner front plate opening • Holds and seals 2" scanner guide pipe
4	48	Flame scanner connector cable assembly: • ¼ turn stainless steel connectors, one end • 50 foot scanner wire pigtail length • ½" NPT connection for installation in liquidtite conduit • Connector connection potted
5	16	SafeFlame™ DFS front access chassis each consisting of: • Three (3) DFS sensor modules • Two (2) blank module • One (1) 115 VAC DFS power supply module • One (1) front access 19" wide rack mount DFS chassis
6	16	SafeFlame DFS chassis enclosure: • NEMA 4 construction • Door window kit • DFS chassis (item 5) factory mounted
7	9	SafeFlame™ DFS Instruction Manuals
8	15	Man-days, (8) hours/day, for startup & testing
9	2	Man-days, (10) hours/day, for plant training

AVAILABLE OPTIONS

Option 1

ABB Inc. Technical Services Support is available in addition to support that is already included for start-up, testing, and on-site training. Additional support services would be at the prevailing rates at time of service. 2003 service rates as detailed in Attachment 2.

The home office for all ABB scanner service engineers is out of the ABB Windsor, CT offices. The contact for scheduling service is John Iovino, 860-285-6784. Mr. Iovino co-ordinates scheduled and emergency service based on available personnel at the time of service.

Option 2

The SafeFlame™ Sensor Module Communication Server (SMCS) is available as an option. This 19" rack mount device is a MODBUS slave that interfaces directly to a plant DCS system and allows real time scanner data to be downloaded into the DCS system via. an RS-232 or RS-485 MODBUS port. This allows scanner data to be presented to operating personnel using existing DCS monitors and displays. The SMCS is not required for normal scanner setup or operation and does not replace the dry flame contacts used for safety in the Burner Management System. Refer to Attachment 1 for a scanner network configuration.

Each SMCS can be connected to a maximum of 6 SafeFlame™ DFS chassis therefore; four SMCS would be required for this installation. The SMCS would be mounted in four of the DFS chassis NEMA 4 enclosures located in each of the boiler corners.

The price for four (4) optional SMCS is:
$10,000 USD
(Ten Thousand US Dollars)

Option 3

The SMCS offered in option 3 has a digital output that can be connected to a Personal Computer rather than the DCS system. As an option, ABB offers a personal computer based data trending and data archiving software package, called ***Flame Explorer,*** which can be used with one or more SMCS. This package can be used to assist plant personnel in initial setup of the scanners and monitoring during routine operation. This optional software package is $2,250 for a single client seat license.

The SafeFlame DFS modules can be programmed locally using the faceplate pushbuttons and display. The ***Flame Explored*** software is not required for tuning the scanner system, rather it is only a tool to make tuning easier.

Option 4

If the scanners are properly located, redundant flame scanners should not be required for reliable flame detection. (see notes and clarifications below). However, if redundant scanners are desired the modified scope and pricing is:

ITEM	QTY	DESCRIPTION
1	96	SafeFlame™ Fiber Optic Flame Scanner: • Cast aluminum housing • Visible light photodiode board assembly • 9 degree viewing angle lens • High Temperature fiber optic cable • ¼ turn stainless steel electrical quick disconnect on scanner
2	96	2" Ridged scanner guide pipe mounting assemblies • Stainless steel centering tip • 2" schedule 40 pipe • Cast aluminum cooling/purge air manifold
3	96	Guide pipe packing gland: • For use with 3" NPT burner front plate opening • Holds and seals 2" scanner guide pipe
4	96	Flame scanner connector cable assembly: • ¼ turn stainless steel connectors, one end • 50 foot scanner wire pigtail length • ½" NPT connection for installation in liquidtite conduit • Connector connection potted
5	32	SafeFlame™ DFS front access chassis each consisting of: • Three (3) DFS sensor modules • Two (2) blank module • One (1) 115 VAC DFS power supply module • One (1) front access 19" wide rack mount DFS chassis
6	16	SafeFlame DFS chassis enclosure: • NEMA 4 construction • Door window kit • Two (2) DFS chassis (item 5) factory mounted
7	9	SafeFlame™ DFS Instruction Manuals

The price for the material detailed in the option 4 furnished upon request.

Option 5

Safe Flame DFS Spare Parts are offered at a 25% discount if purchased on the same purchase order as the flame scanner system. The major spare parts and quantities recommended for the base scanner system is shown in Table 1 along with the list price and 25% discounted price. The scanner head delivery is typically less than 5 weeks with the rest of the components in stock, available for next day delivery.

Table 1 – Scanner System Spare Parts

Quantity	Item Description	Part Number	Per Unit List Price	Unit Price 25% off if purchased w/scanner system	Total Discounted Price
4	Visible Light Scanner	C10-922XX-LP	$1,710.00	$1,282.50	$5,130.00
6	Cable/Connector Assembly	C10-97252	$291.00	$218.25	$1,309.50
4	DFS Sensor Module Assembly	C86-94639	$1,010.00	$757.50	$3,030.00
3	DFS Power Supply	C86-80741	$800.00	$600.00	$1,800.00
6	4 amp pico fuses	C32-32012	$4.20	$3.15	$18.90
				Total =	**$11,288**

Price escalation on flame scanner replacement parts through 2010 is nominally 1% per year. In addition the recommend spare parts, a detailed parts list is in Attachment 4.

NOTES AND CLARIFICATIONS

1. ABB experience on multiple air zone, wall fired coal burners has been that the coal flame flicker frequency is much stronger in the inner air zone vs. any outer air zones. Since background flicker frequencies do not change with the inner or outer air zone scanner locations, any increases in measured flame flicker frequency improve the overall scanner performance and makes the flame detection more robust. Therefore, ABB recommends the flame scanners be installed in the inner air zone.

2. The selection of one visible light scanner fiber optic scanner for both oil and coal flame detection is based on the premise that; the oil flame shape and "color" does not change dramatically during the transition between oil flame with no primary air (PA) flow to oil flame with primary air flow. ABB has observed on some coal burners with center mounted

oil lighters a dramatic change in the oil flame when PA is introduced. The oil flame changed from a standard, turbulent oil flame, to a "gas like" laminar flow flame. When a change like this occurs a visible light scanner is not the best choice for the oil lighter. When this occurs a second, UV flicker scanner, should be added for oil flame detection. Based on phone discussion between yourself and our Product Manager, Jim Niziolek, this oil flame shape does not occur with the Advanced Burner Technologies Design and therefore, a single scanner for both oil and coal will suffice for this application.

3. For this application ABB would recommend a nominal scanner purge airflow of 20 SCFM at 3 IN-WC static pressure. The purge/cooling air specification for the existing ABB FLAMON UW scanners calls for 15 SCFM at 10 IN-WC above furnace pressure. On past FLAMON to SafeFlame fiber optic scanner retrofits the existing purge air system has been more than sufficient to keep the scanners cool and the existing fans have not been changed. Therefore, if the existing scanner air system provides clean purge air it should not need to be replaced with the 48 scanner system. ABB would however, like the opportunity to review the existing scanner fan specifications to insure the capacity is sufficient.

4. Detailed temperature specifications for the flame scanner fiber cable, scanner head, and electronics is in Attachment 1.

5. Ten time per second the DFS sensor module runs system diagnostics from the scanner head photodiode to the microprocessor A/D converter. In the unlikely event a problem is detected the flame relays in that sensor module will de-energize and a fault will be indicated on the face of the scanner sensor module. These diagnostics include:

   5.1. ROM memory (on power up)
   5.2. RAM memory (on power up)
   5.3. Positive power supply low
   5.4. Negative power supply low
   5.5. A/D failure
   5.6. Sensor positive supply short
   5.7. Sensor negative power supply short
   5.8. Input signal high
   5.9. No input signal
   5.10. Frequency over range

6. The highest background flicker frequencies are created from opposed wall lighters during initial start-up of the boiler. As coal is introduced into the boiler the background flicker decreases to 0 Hz. The SafeFlame DFS Sensor module has two flame relays. If desired, one flame relay can be set with trip points commensurate with the background conditions observed during start-up while the other can be adjusted for conditions observed during normal coal operation. In this fashion the scanner system will provide the flame discrimination required while allowing the system to be as forgiving as possible to firing system perturbations or flame shape changes.

7. There are no specific routine maintenance requirements. Scanner maintenance is basic:

   7.1. As needed – If scanner intensity drops within 10% of the trip point, the scanner should be removed and the lens cleaned. If clean purge air is supplied to the scanner, this cleaning may not be needed except as a preventative measure after an extended outage.
   7.2. During outages
      7.2.1. If burner work is to be performed removed scanner to avoid mechanical damage
      7.2.2. Inspect and clean lenses if necessary after and extended outage
      7.2.3. Periodically blow dirt and dust from electronics
      7.2.4. Periodically check tightness of all terminations

8. One or more of the following technical personnel will supply support to the proposed scanner system design:

Jim Niziolek	Product Manager	860-285-6775	27 years experience
Paul Chase	Chief Engineer, Scanners	860-285-6762	35 years experience
Bill Clark	Production/Quality Manager	860-285-9402	25 years experience
Arnie Piellucci	Project Engineer	860-285-6871	25 years experience

EXCLUSIONS

The following items are not included as part of this offer and are the responsibility of others.

- Mounting, installation, and wiring of new hardware
- Connection of the scanner flame outputs to the BMS system
- Scanner cooling air system piping
- Guide pipe installation in burner
- BMS system changes

REFERENCE LIST

A list of user contacts is in Attachment 3.

DELIVERY

Standard delivery is 10-12 weeks ARO. Expedited delivery may be available depending on shop loading at time of order.

TERMS

Payment terms are net 30 from invoice. Invoices to be issued upon shipment.

Standard ABB Inc. Terms and Conditions apply and are attached.

Pricing quoted is subject to acceptance within 120 days of date of quotation.

Prices include shipping (except freight for spares will be pre-paid & billed at cost).

I thank you for this opportunity to quote our SafeFlame™ DFS System for your coal fired application. If you have any questions on this offer or other questions regarding the scanner system hardware, please feel free to call me at 860-285-6895 or our Product Manager, Jim Niziolek at 860-285-6775.

Respectfully Submitted,

Sam Good
Proposal Specialist

ABB Inc
2 Waterside Crossing
Suite 200
Windsor, CT 06095

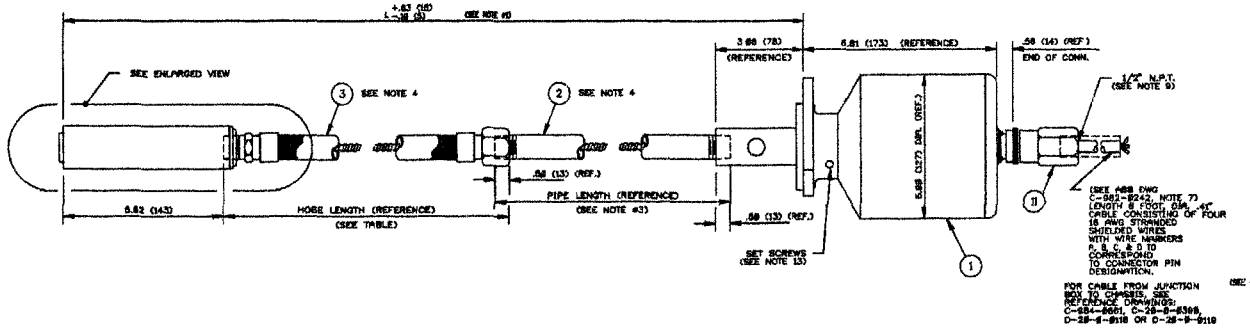

BILL OF MATERIAL

	ITEM NO	NO. REQ'D.	PART NO.	DESCRIPTION	MAT'L-ITEM
(SEE NOTE 16)	1	1	SEE TABLE 2	SCANNER HOUSING ASSEMBLY VISIBLE LIGHT	—
	2	1	————	1/2" SCH. 40 PIPE (T.B.E) (SEE NOTE 3)	154
	3	1	SEE TABLE 1	FLEXIBLE HOSE, A084-8477	—
	4	1	C65-81987	PLUG, A-987-839	—
	5	1	C43-18166	CLOSE NIPPLE, 1/2" N.P.T, STEEL	
	6	1	C88-18317	COMPRESSION SPRING, B232868-847	—
	7	1	C48-89817	CONDUIT BODY, 1/2" N.P.T.	
	8	1	C48-89179	COVER, CONDUIT BODY, 1/2"	
	9	1	C18-97248	FLAME SCANNER HEAD ASSEMBLY. B232866-849	—
	10	3	C58-95192	8-32 UNC SOCKET HEAD CAP SCREW, .19 (5) LONG	282
	11	1	C18-97252	ADAPTER ASSEMBLY 8", C-982-8242	—
(SEE NOTE 8)	12	A/R	C98-91739	1/2" FLEXIBLE CONDUIT	—

TABLE 1 (SEE NOTES 1 & 2)
SCANNER SELECTION TABLE

HOSE NO.	HOSE PART NO.	HOSE LENGTH	"L"	ASSY. P/N	ASSY. P/N (LESS ITEM NO. 11)
1	C84-91877	42.00 (1066)	51.25 TO 69.19 (1302 TO 1757)	C18-92294	C18-92294-LP
2	C84-97255	60.00 (1524)	69.25 TO 85.19 (1758 TO 2164)	C18-92295	C18-92295-LP
3	C84-97256	72.00 (1829)	85.25 TO 106.81 (2165 TO 2713)	C18-92296	C18-92296-LP
3	C84-97256	72.00 (1829)	106.81 TO 126.81 (2713 TO 3221)	C18-92237	C18-92237-LP
4	C84-97278	30.00 (762)	39.25 TO 54.25 (997 TO 1382)	C18-92297	C18-92297-LP
5	C84-97258	24.00 (610)	33.25 TO 45.25 (845 TO 1149)	C18-92298	C18-92298-LP

TABLE 2 (SEE NOTE 15)
SCANNER HOUSING FIBER OPTIC CABLE SELECTION

STANDARD LENGTH (A)	EXTENDED LENGTH (B)
X=108"	X=138"
PART NO. C18-92238	PART NO. C18-92239

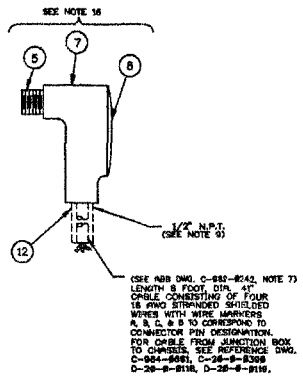

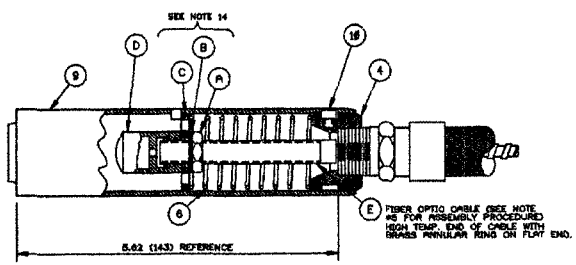

ENLARGED VIEW
SCALE: FULL SIZE

NOTES:

1. "L" DIMENSION AS SPECIFIED ON WINDBOX ARRANGEMENT DRAWING PND REQUISITION. THE "L" DIMENSION IS EQUAL TO "A" PLUS .38 (10). FOR "A" DIMENSION, SEE FLAME SCANNER GUIDE PIPE ASS'Y. DWG'S. D-982-9139, D-982-9140 & C-982-8238 "L" MAXIMUM = 106.81 (2713) & "L" MINIMUM = 51.25 (1) WINDBOX.
2. SELECT HOSE LENGTH (ITEM #3) TO INSURE MAXIMUM FLEXIBILITY FOR SCANNER REMOVAL (SEE TABLE).
3. PIPE LENGTH (ITEM #2) EQUALS "L" DIMENSION MINUS HOSE LENGTH MINUS 7.00 (178)
4. APPLY FEL-PRO-C-100 HI TEMP ANTI-SEIZE OR EQUAL TO ALL THREADS AT ASSEMBLY
5. PULL DESIRED LENGTH OF FIBER OPTIC CABLE FROM HOUSING ASSEMBLY AND THRU THROUGH PIPE (ITEM #2) HOSE (ITEM #3) AND PLUG (ITEM #4). SCREW ITEMS 2, 3 & 4 TOGETHER. ASSEMBLE ITEMS (A) THROUGH (E) (SEE NOTE #14). GENTLY PUSH EXCESS CABLE BACK INTO HOUSING. SLIDE FLAME ASSEMBLY (ITEM #9) OVER PLATE, SPRING AND PLUG. COMPRESS SPRING AND LOCK PLUG INTO HEAD WITH SCREWS (ITEM #10).
6. ASSEMBLE ADAPTER ASSEMBLY (ITEM #11) TO SCANNER.
7. CLEARANCE SPACE REQUIRED FOR PULLING THE SCANNER ASS'Y OUT OF THE GUIDE TUBE IS APPROX. EQUAL TO THE PIPE LENGTH (ITEM 2) PLUS 12".
8. SCANNER CABLES TO BE ISOLATED FROM ALL OTHER WIRING FROM SCANNER ADAPTER TO SCANNER CHASSIS.
9. 1/2" FLEXIBLE CONDUIT TO MEET CUSTOMERS' AREA CLASSIFICATION, NOT SUPPLIED BY ABB INCLUDE MINIMUM LENGTH TO ALLOW FOR BOILER EXPANSION
10. THE COOLING AIR SUPPLY FROM IGNITOR FAN OR SEAL AIR SYSTEM MUST BE MAINTAINED GREATER THAN 0.00 W.G. (1.40 KILOPASCALS) ABOVE FURNACE PRESSURE FOR ALL OPERATING CONDITIONS. 30 SCFM (0.14 SEC) MINIMUM.
11. DIMENSIONS ARE IN INCHES WITH MILLIMETER EQUIVALENT IN PARANTHESIS ( ).
13. BEFORE INSTALLATION, TIGHTEN SET SCREWS IN HOUSING ASSEMBLY.
14. ASSEMBLE ITEMS (A) THROUGH (E) (REF D-232865-823) BY DOING THE FOLLOWING:
    A. PLACE ITEMS A, B, & C AS FAR BACK ON FIBER OPTIC CABLE (ITEM E) AS POSSIBLE.
    B. THREAD ITEM (D) LENS BARREL INTO FIBER OPTIC CABLE (ITEM E) UNTIL IT BOTTOMS OUT
    C. THREAD ITEM (A) CAP NUT) TOWARDS (ITEM (D) UNTIL TIGHT.
15. STANDARD LENGTH (A) FIBER OPTIC CABLE USED FOR "L" DIM UP TO 106.81 (2713mm) USE EXTENDED LENGTH "B" FIBER OPTIC CABLE FOR "L" DIMS. FROM 106.81 TO 126.81 (3221mm)
16. AN OPTIONAL RIGHT ANGLE CONDUIT OUTLET BOX THAT ADAPTS TO ITEM 11 IS AVAILABLE UPON REQUEST. REFER TO ITEMS: 5, 7 & 8.

MATERIAL SPECIFICATION CHART

MAT'L-ITEM	SPECIFICATION	PURCHASE INSTR.
154	CARBON STEEL A-120	—
282	CARBON STEEL ANSI B16.5.2	—

SAFE FLAME™ I, II & DFS FLAME SCANNER
9" VIEWING ANGLE VISIBLE LIGHT FLAME SCANNER ASSY.
WITH HIGH TEMP. FIBER OPTIC CABLE
-STANDARD-

THIS DRAWING IS THE PROPERTY OF FOSSIL CONTROLS DIVISION WINDSOR, CONNECTICUT U.S.A. 06095 A DIVISION OF ABB AUTOMATION INC.

ABB

THIS DOCUMENT CONTAINS PROPRIETARY DATA AND MAY NOT BE REPRODUCED OR DISCLOSED WITHOUT PERMISSION OF ABB AUTOMATION INC.

REV	DATE	BY	CHK	REVISION DESCRIPTION
A	4/2/96	[illegible]	[illegible]	[illegible]
B	4/2/96	[illegible]	[illegible]	[illegible]
C	4/2/96	[illegible]	[illegible]	[illegible]
D	4/2/96	[illegible]	[illegible]	[illegible]

DRAWING SCALE: NONE
PART SCALE: 1 : 1
DATE: 3/29/96
NAME: STANDARD
SIZE: STNRD-D232865-825
REV: 02
N

ORIGINAL 1 CONTROLS

IP7_032470

ATTACHMENT 2
2003 DOMESTIC FIELD SERVICES RATES

ABB Inc. Utility Automation Service is pleased to offer site technical assistance at the following rates and conditions of payment.

The services described above are offered at the per diem rate of $1360 per normal work day. A normal work day is defined as the first eight (8) hours worked during any day from Monday to Friday. A minimum charge of eight (8) hours is applicable for every normal work day commencing from the initial travel day to the purchaser's site and ending on the final travel day at the conclusion of the site assignment. Initial and final travel time is billable at the normal work day rate, regardless of what day of the week or what time of the day the travel actually occurs. Eight (8) hours will be billable per normal work day even if the field service engineer is directed or requested to stand by locally. The overtime rate is 1.5 times the normal work day rate or $255 per hour. Overtime is defined as any work performed in excess of eight (8) hours during any work day and all hours worked on Saturdays and Sundays. The overtime rate applies to all work performed <u>except</u> Sundays, New Year's Day, Memorial Day, Independence Day, Thanksgiving Day and Christmas Day. Two (2) times the normal work day rate or $340 per hour applies to all hours worked on Sundays and those specific holidays.

For extended assignments, i.e., durations in excess of three (3) months, the service engineer shall be entitled to home leave every five (5) weeks. Home leave shall include four (4) days off, i.e., two working days and two weekend days. All travel and living expenses, as well as, other miscellaneous expenses, will be billed at actual cost. These costs shall include airfare, meals, car rental, hotel, etc.

Payment shall be 30 days upon receipt of invoice. Invoicing shall be on a monthly basis. This offer is valid for a period of sixty (60) days from this date. ABB Inc. "General Terms and Conditions of Sale" apply to this offering. A copy is attached to this document.

ABB Inc. requires a minimum of thirty (30) days advance notice of actual dates for which service is required in order to assure that appropriate resources are allocated and assigned. ABB Inc. will make every reasonable effort to accommodate accelerated needs, schedule changes and to respond to emergency "on demand" requests for site service.

ATTACHMENT 3
REFERENCE LIST FOR ABB INC. SAFE FLAME™ DFS FLAME SCANNER SYSTEMS

Contact	Utility and Plant(s)	Application/Fuel
Kevin Williams 563-262-2888	MidAmerican Energy Louisa Installed 2002	B&W Opposed Wall Coal w/oil & gas lighters
Jim Parsons 816-556-2162	Kansas City Power and Light Iatan Installed 2000	B&W Opposed Wall Coal with oil lighters
Jack Dabbs 770-854-4441 x464	Georgia Power Plant Wansley Installed 2001	T-Fired Coal
Ron Wolfe 270-844-6035	Western Kentucky Energy Greene #2 Installed 2001	B&W Opposed Wall Coal w/oil lighters
Ed Hutchins 405-553-5245	Oklahoma Gas & Elec. Mustang/Horseshoe Lake Installed 1999 and 2000	Wall, T-Fired, GT Gas
Art Bocchino or Bill Smith 319-262-3588	Muscatine Power and Water Unit 8 Installed 2000	Cyclone, TFired Coal
Travis Ray 970-229-1697	Platte River Power Authority Installed 2000	T-Fired Coal
Richard Winkler 314-554-4214	Ameren Sioux Plant Installed 1999	Cyclone Coal
Gary Dove 505-537-4119	Phelps Dodge Units 7 & 8 (1x1 and 3x3) Installed 1998	Wall Gas
Ross Childs	Western Resources, Gordon Evans Unit 2	Wall

IP7_032472

316-291-8666	Installed 1998	Gas/Oil
Mario Amaya 210-978-3629	CPS San Antonio, Victor Braunig 1,2, 3 Installed 1998	T-Fired Gas/Oil
Grant Nurnberg 918-581-0842	P.S. Oklahoma Northeastern Station Installed 1996, 1997	T-Fired Coal
Jim Clark 516-391-6123	Long Island Lighting Co. Barrett Station Installed 1994, 1997	T-Fired Oil/Gas
Brad Zimmerman 701-873-2571	Montana-Dakota Utilities Coyote Station Installed 1997	Cyclone Coal
Gary Hausman 610-498-6247	Pennsylvania P&L Martins Creek Installed 1995	T-Fired Oil/Gas
Harold Edwards 913-331-4700	Western Resources Lawrence Station Installed 1994	T-Fired Coal/Gas
Mickey Kinney 816-325-7516	Independence P&L Blue Valley Station Installed 1994	T-Fired Coal/Oil/Gas
Stan Saska 860-848-6018	Northeast Utilities Montville Station Installed 1994	T-Fired Oil
Frank Lyter 610-774-6046	Pennsylvania P&L Brunner Island Installed 1993, 1994	T-Fired Coal

11/15/02

IP7_032473

ABB INC.
Utility Plant Automation
2 Waterside Crossing
Suite 200
Windsor, CT. 06095
Fax: (860) 285-6999

ATTACHMENT 4 - Spare Parts Listing for SafeFlame Fiber Optic DFS Scanner Systems
Plant: Intermountain Power
Proposal Number U030304

Description	Part No.	Unit Price
Head Assy (wide viewing angles)	C10-97248	$ 226.00
Collimator Tube	C65-91960	$ 78.00
Body (wide viewing angles)	C63-97311	$ 99.00
Lens (Visible Light)	C35-90398	$ 26.00
Spacer (9840475)	C65-91966	$ 14.00
Lens Barrel Assembly (9 degree)	C10-97326	$ 291.00
Mounting Plate	C52-91948	$ 40.00
Compression Spring (wide viewing angles)	C68-10317	$ 13.00
Jam Nut	C08-95061	$ 1.60
Plug	C65-91967	$ 62.00
Fiber Optic Cable, hi temp 110"	C99-94501	$ 244.00
Scanner Flex Hose, 72"	C64-97256	$ 126.00
Housing Electronics Card Visible Light (Replaces C87-92525 & C10-97261)	C10-24112	$ 490.00
Electrical Connector Gasket	C69-97363	$ 3.55
Connector/Cable assembly, 50 ft	C10-97252-50	$ 352.00
Connector w/pre-wired header Replaces (C36-92130)	C36-92146	$ 72.00
Protector Plate	C63-97260	$ 18.00
Screws 8-32x0.19 (bag of 5)	C08-95192	$ 5.20
Sensor Module Assembly	C86-94639	$ 1,010.00
Sensor Relay/Board	C86-94644	$ 870.00
Display Board	C86-94612	$ 175.00
Power Supply 110/220Vac	C86-80741	$ 800.00
Fuse 4 Amp	C32-32012	$ 4.20

SAFE FLAME™ DFS FIBER OPTIC SCANNERS FOR: WALL FIRED OR TILTING TANGENTIAL FIRED COAL BOILERS

SAFE FLAME™ DFS TECHNOLOGY

Flame Scanners are a crucial part of a boiler's safety system. Their primary function is to identify potentially dangerous "flame out" conditions where ignition has ceased and continued addition of fuel could cause an explosion. Because of the flame scanner importance, they must be extremely reliable and rugged.

Safe Flame™ technology has been reliably in use since 1982 with over eleven thousand (11,000) scanners installed. Safe Flame™ DFS is the newest generation of this technology. It incorporates the speed and precision of digital signal processing, which makes it the finest flame scanner available.

SAFE FLAME™ DFS FLAME SCANNER SYSTEM DESCRIPTION

All Safe Flame™ DFS Flame Scanner Systems have four major components.

1. Flame scanner mounting hardware which is affixed to the burner front

2. Flame scanner head, which mounts on the burner/windbox. The scanner head converts the light energy from the burner flames into electrical signals.

3. A quick disconnect electrical connector/cable assembly transmits the analog scanner signal to a flame scanner electronics chassis. If the chassis is located more than 100 feet from the scanner head a local junction box is used for spicing to flame scanner extension cable.

4. The Safe Flame™ DFS Scanner Chassis holds the system power supply and the microprocessor based DFS flame sensor modules. The electrical signal from each flame scanner head is monitored and analyzed by a DFS Flame Sensor Module, which determines if the flame scanner is seeing a stable flame. Flame safety contacts, analog outputs, and digital outputs are all made available to the boiler operators from terminal strips on the backplane of the Safe Flame™ DFS chassis.

A typical scanner installation is shown in Figure 1.

FLAME SCANNER FOR PULVERIZED COAL FIRING

The recommended ABB Inc. flame scanner for pulverized coal applications is the Safe Flame™ visible light, through the windbox fiber optic scanner. On wall-fired boilers where flame discrimination is required, a wide viewing angle lens is used. A ridged guide pipe is supplied for penetration into the wall-mounted burner. On a tilting tangential fired unit a narrow viewing

IP7_032475

angle lens is used to discriminate warm up oil guns and prove coal fireball flame. On tilting tangential fired units the scanner guide pipe is flexible to allow the scanner to tilt up and down with the corner burners. All other scanner and system components are the same.

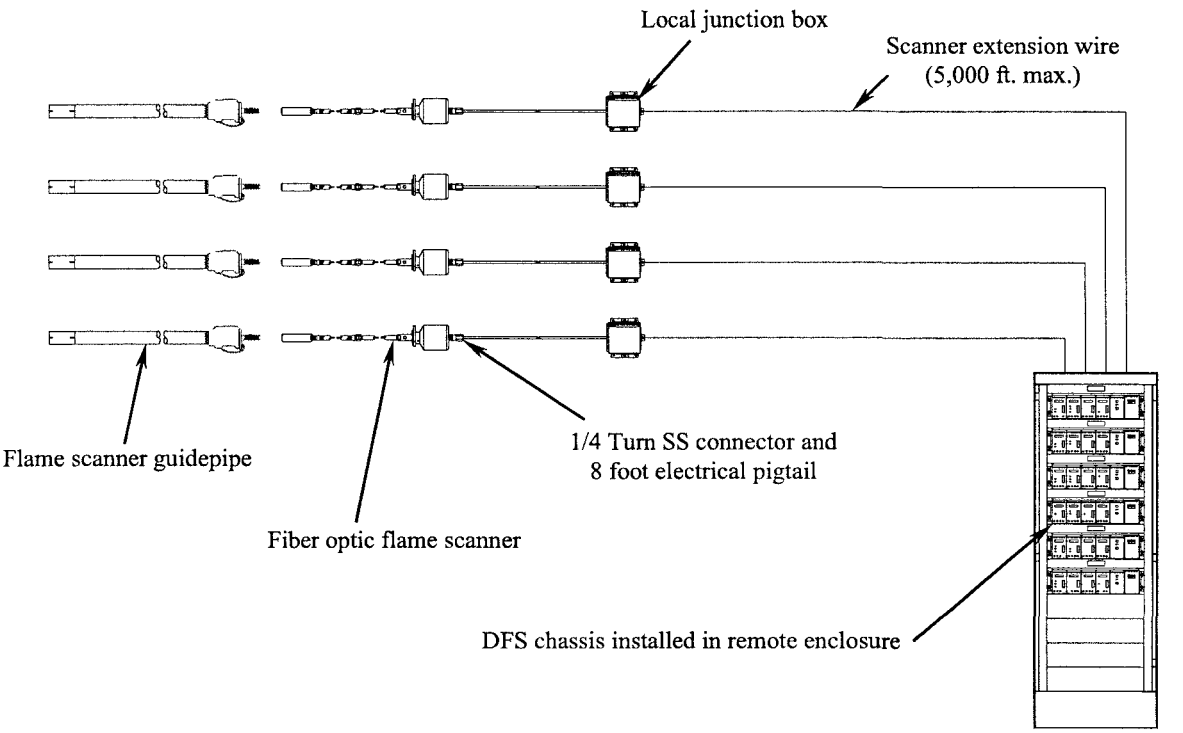

Figure 1 – Typical Flame Scanner Installation

FLAME SCANNERS FOR CYCLONE BURNER

For cyclone burners the ABB SafeFlame™ wall mounted fiber optic flame scanner is recommended. Cyclone burners are notorious for the extreme temperatures on and immediately adjacent to the burners making scanner survival difficult, even for the most rugged scanners. To accommodate these high temperatures the SafeFlame™ wall mount fiber optic scanner uses a high temperature fiber optic cable to allow the scanner electronics to be removed away from the cyclone. Fiber cables are available in 110"or 360" (30 foot) lengths.

THROUGH THE WINDBOX FIBER OPTIC FLAME SCANNER ASSEMBLY

The ABB Inc. Safe Flame™ through the windbox fiber optic flame scanner is a rugged, high temperature flame scanner designed for use on coal and/or oil wall fired boilers. This multi-fuel scanner reliably discriminates individual burner flames over background radiation and detects unstable operation and flame out conditions.

IP7_032476

The scanner is a visible light scanner and is available with different viewing angles to accommodate the firing of pulverized coal, oil or a combination of both fuels. The purpose for fiber cable is to allow the focusing lens to be brought closer to the burner front allowing an unobstructed field of view for the scanner. On wall-fired boilers this allows the scanner optics to focus on the near field burner flame while averaging out the light pulsations created from background flames. This combination of fiber optics and lensing provides unsurpassed flame discrimination capabilities. On tangential fired boilers, a narrow viewing angle lens is used to allow the scanner to look deep into the furnace, providing strong fireball flame flicker frequency even at low load operation. As with all Safe Flame™ scanners, the Fiber Optic Flame Scanner has been ruggedly designed for years of reliable service in the power plant environment. Refer to Figure 2.

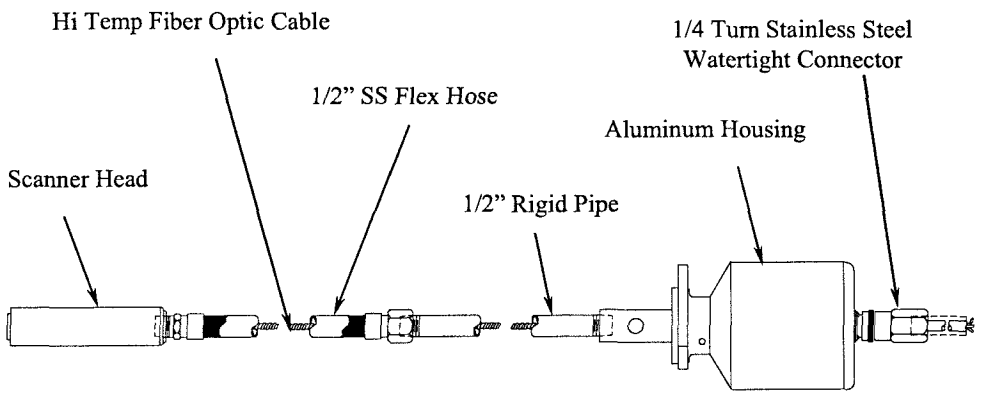

Figure 2 – Safe Flame™ Wall Fired Fiber Optic Scanner

The scanner stainless steel optical head houses a lens assembly that couples the light energy from an oil or coal flame into a high temperature fiber optic cable. Refer to Figure 3. The fiber optic cable assembly consists of a fiber bundle encapsulated in a 3/8" stainless steel over-braid flex jacket. The fiber optic cable is installed in a ½ inch outer stainless steel flex hose and ½ inch schedule 40 pipe connected to a rugged cast aluminum housing. The fiber optic cable is terminated at a photodiode/electronics card mounted in the aluminum housing. The scanner stainless steel optical head assembly is rated for 900 °F (480 °C) operation, whereas the signal conditioning aluminum housing is rated at 140 °F (60 °C).

All scanners are supplied with a standard length fiber optic cable. Changing the length of the flex hose and the ridged pipe sets the overall length of the scanner assembly. No special length fiber cable is required as excess fiber cable is simply coiled inside the aluminum housing. This makes scanner spare parts compatible between plants.

IP7_032477

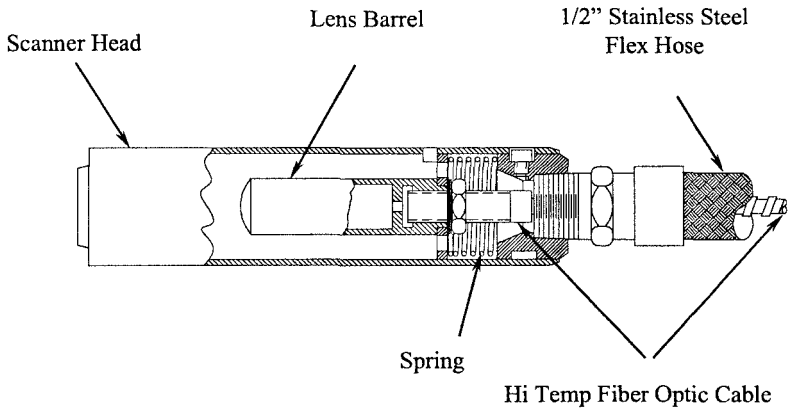

Figure 3 - Details of Scanner Head

The fiber optic cable transmits the light from the optical head to a photodiode/electronics card, which converts the collected light energy into an electrical flame signal. The photodiode circuit has a dynamic light range of 10^5 that makes the scanner very sensitive to combustion flame throughout the entire operating range of the burner.

Refer to Figure 4 for a typical installation in a coal-fired wall burner. Refer to Figure 5 for a tilting tangential fired burner installation.

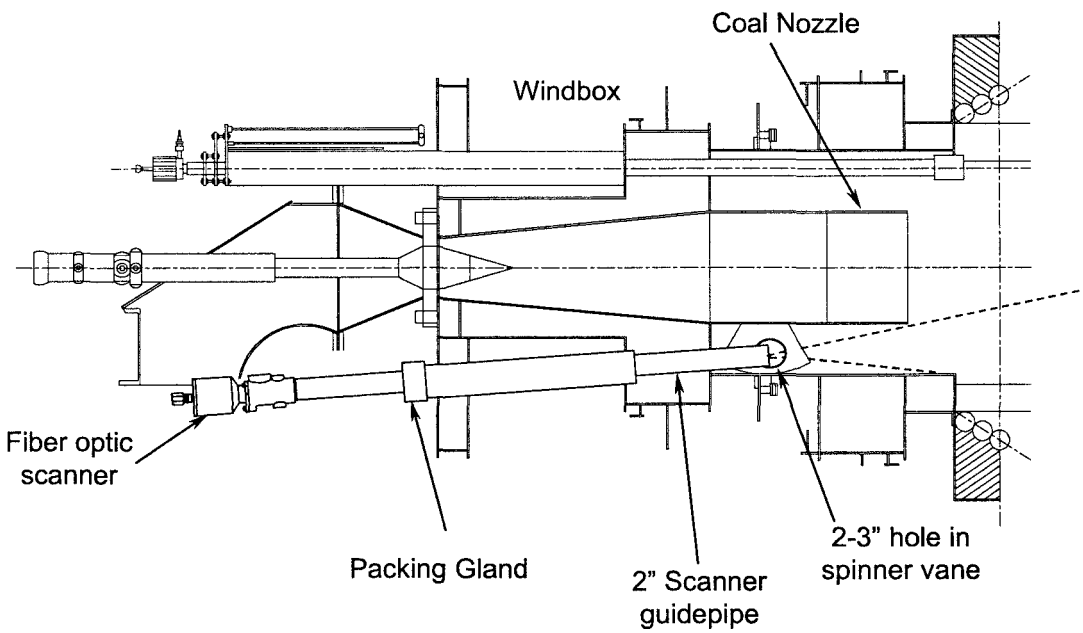

Figure 4 – Typical Fiber Optic Scanner Installation – Wall Fired Burner

IP7_032478

Installation of the Fiber Optic Flame Scanner is accomplished by inserting the scanner down the flexible or ridged guide pipe, which is installed through the burner windbox. Once installed in the guide pipe the scanner head has excellent visual access to the combustion flame. The end of the guide pipe has a cooling air inlet tee for purge/cooling air. Nominally 30 SCFM at 6" WG is recommended to keep the guide pipe free and clear of slag or ash and keep the scanner head cool.

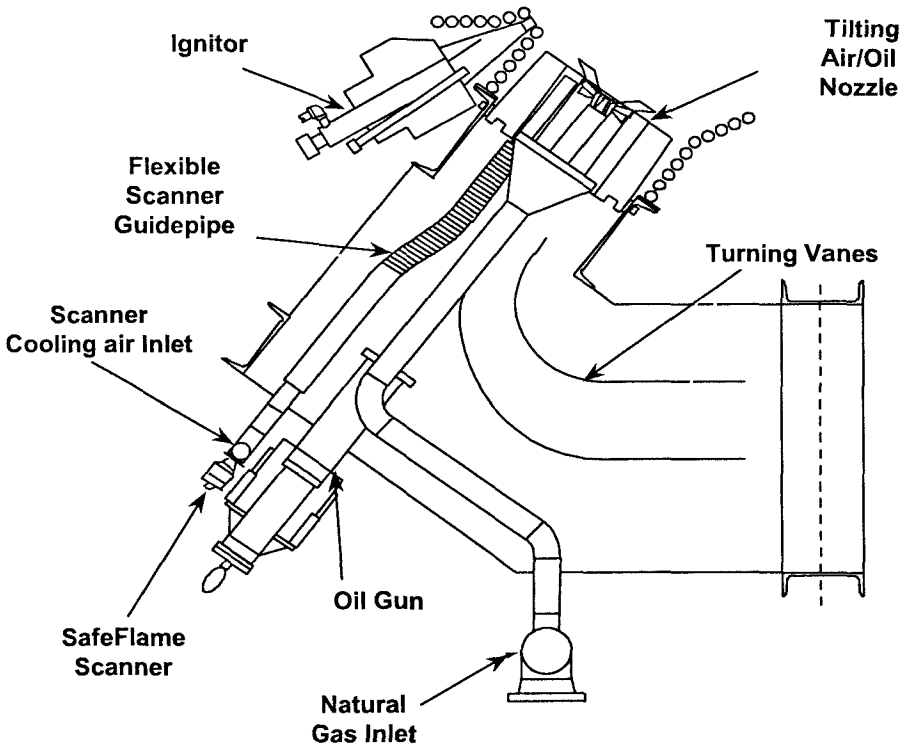

Figure 5 – Typical Fiber Optic Scanner Installation – T-Fired Burner

WALL MOUNTED FIBER OPTIC SCANNER

As noted above, the SafeFlame™ wall mounted fiber optic scanner is recommended for cyclone burners due to the high temperature at the cyclone. This scanner uses the same fiber optic cable, lens, electronics board, and connector as the through the windbox scanner allowing for compatibility of spare parts. An optional 30-foot fiber optic cable is available for those installations where it is desirable to remote the electronics even further from the cyclone. Refer to Figure 6.

IP7_032479

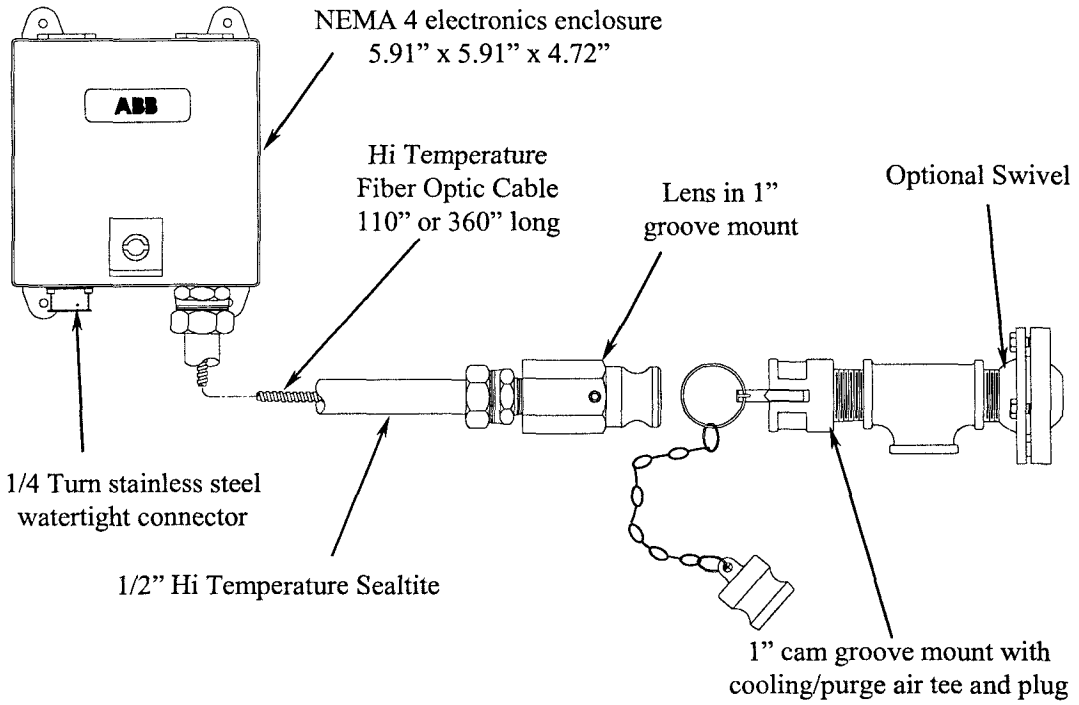

Figure 6 –Wall Mount Fiber Optic Scanner for Cyclones

FLAME SCANNER ELECTRICAL CONNECTOR/CABLE ASSEMBLY

For ease of maintenance all Safe Flame scanner heads have a bayonet style 5-pin connector. To insure long-term reliability the electrical connections are potted at the factory. Standard cable lengths from the connector are 8', 25', 50', and 100'. The other end of the cable (or "pigtail") has bare wires for connection to scanner extension wire in a junction box, or connection to a Safe Flame™ chassis. Where the cable exits the connector there is a ½" FNPT thread so the "pigtail" can be installed in liquid tight, flexible electrical conduit.

SAFE FLAME™ DFS ELECTRONICS CHASSIS

All Safe Flame scanner heads produce an analog current signal that is input into a remotely mounted Safe Flame™ DFS Electronic chassis. The chassis can be mounted up to 5,000 feet from the flame scanner. The DFS chassis holds the power supply, the scanner Sensor Modules, an optional 2/4 logic module, and the field terminal strips for system I/O. The scanner system AC power, flame scanner input signals, sensor module flame contacts, analog, and serial outputs signals are all distributed through the chassis backplane and are available on the field terminal

IP7_032480

strips. Each scanner heads requires one DFS Sensor Module and one chassis can support up to four DFS Sensor Modules.

A four-channel rear DFS Electronics Chassis is illustrated in Figure 7. It can be seen that four DFS Sensor Modules, an optional 2/4 Logic Module and a Power Supply Module are "plugged" into a 19" rack with a back plane. The setup is designed to be modular to ease serviceability by technicians.

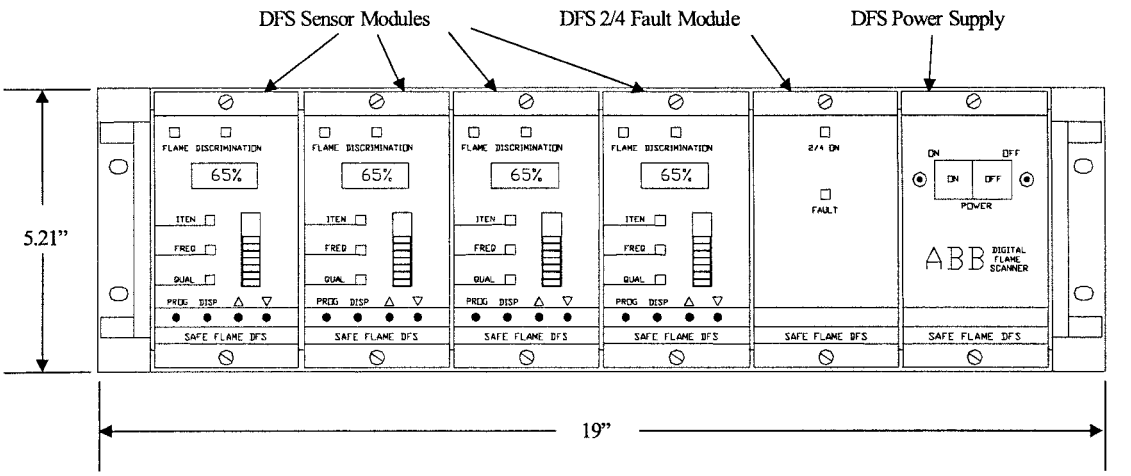

Figure 7 - Safe Flame™ DFS Rear Access, 4 Channel Chassis

Safe Flame DFS scanner chassis are available in front access or rear access design. With the rear access design the chassis is 19" rack mounted with field terminations at the rear of the chassis. A front access chassis is twice as high (10.5"), panel mounted, with access to the field terminations from the front of the chassis. The field terminals face the front and are covered by an aluminum fold down door. One either side plate is a 3" diameter opening for wire feed to the terminals. Refer to Figures 8 and 9 for photos of a rear and front access chassis.

OPERATION

The Safe Flame™ DFS Sensor Module is self-checking 10 times per second, from initial power "on" through normal operation. If no faults are detected, the previously programmed user trip points are loaded in from non-volatile memory and normal operation begins. If any failures are detected, a fault condition is generated.

IP7_032481

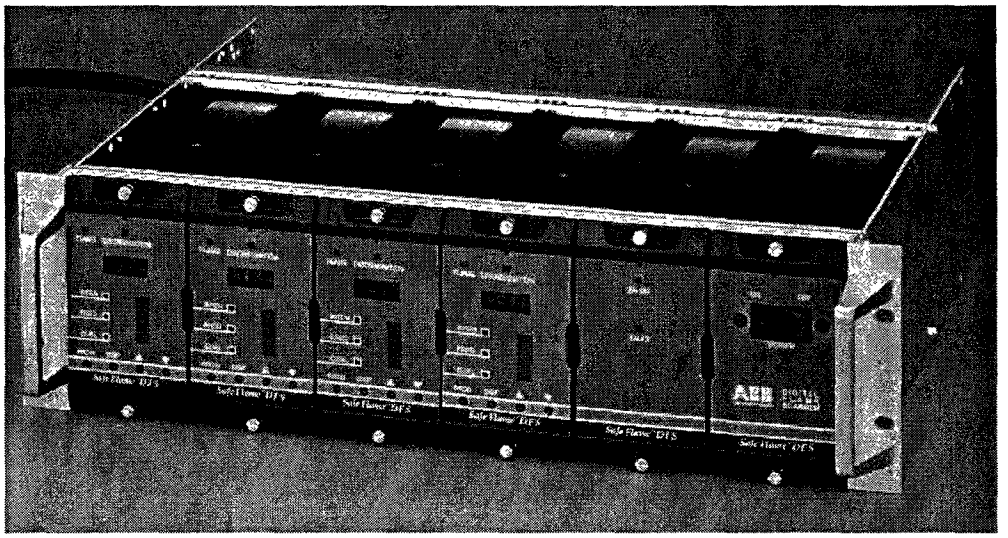

Figure 8 – Rear Access Safe Flame DFS Chassis

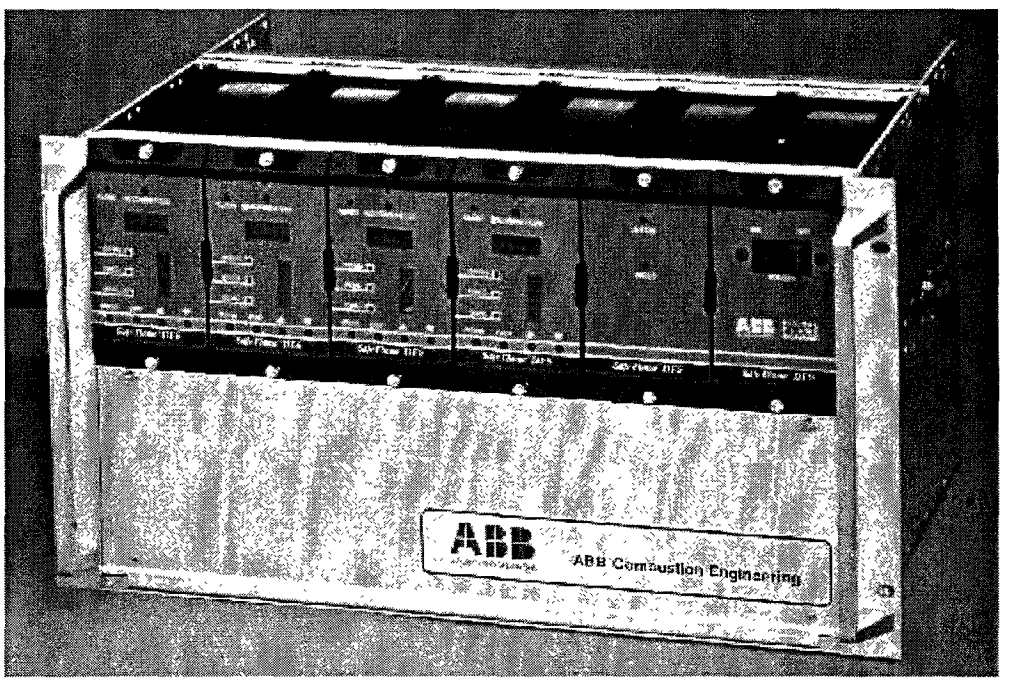

Figure 9 –Front Access Safe Flame DFS Chassis

The scanner head transmits the flame signal to the microprocessor in the DFS Sensor Module. The Sensor Module examines the flame signal two thousand (2,000) times a second, measuring the flame intensity and flame flicker frequency. The measured intensity and flicker frequency are compared to user programmed trip points. If both the intensity and frequency exceed their respective trip points, flame is proven and the flame relay is energized. The flame scanner trip

IP7_032482

points are determined during initial system tuning and programmed using easy to follow prompts. Sophisticated proprietary software is used to extract the flame flicker frequency and intensity information.

If either the measured flame flicker frequency or the measured intensity drops below the programmed trip points for more than the user settable time-delay period, the flame relay (and the TTL flame signal) will de-energize indicating a flame failure.

A second relay is provided on the DFS Sensor Module. A hardware jumper sets the function of this relay. It can be used as a second, independently programmed flame relay, or can be used as a fault relay. If the relay is used for fault indication it will be energized whenever the system is working correctly. If any system fault is detected the relay is de-energized and both a fault code and a short message are displayed on the front panel. If used a second flame relay it will energized when the flicker frequency and intensity both exceed the second set of trip points programmed into the DFS Sensor Module.

An optional 2/4 Module is available for installation in the DFS chassis. This module has 2 relays that are output to the back plane terminal strips. If two of the four DFS Sensor Modules in the chassis are proving flame one of the relays will energize. This relay output is typically used for fireball flame monitoring control logic on tilting tangential fired boilers. The second relay is a fault relay and is normally energized. If any DFS Sensor Module in the chassis goes into a fault mode this relay will de-energize as an operator warning.

SENSOR MODULE COMMUNICATION SERVER (OPTION)

Each DFS sensor module has an RS-232 output that carries over 25 pieces of information on the scanner. Function settings, fault status, operating parameters, and channel identifiers are all available through this serial output. A connector on each DFS chassis has all 4 RS-232 signals from each Sensor Module in the chassis.

The Safe Flame™ Sensor Module Communication Server (SMCS) is a sample hold digital multiplexor that can be connected via ribbon cables to six DFS chassis. Once per second the SMCS samples each DFS Sensor Module and stores all data available on the serial line.

A switch selectable serial output on the SMCS (RS-232 or RS-485) is configured as a MODBUS® slave and can be plugged into a DCS, BMS, or personal computer. MODBUS® commands are issued from the host to selectively download data for operator display. If a personal computer is used, ABB Inc. offers a data display, trending, and programming package called ***Flame Explore*** for use with Safe Flame DFS scanner system.

IP7_032483

A typical SMCS configuration is shown in Figure 10.

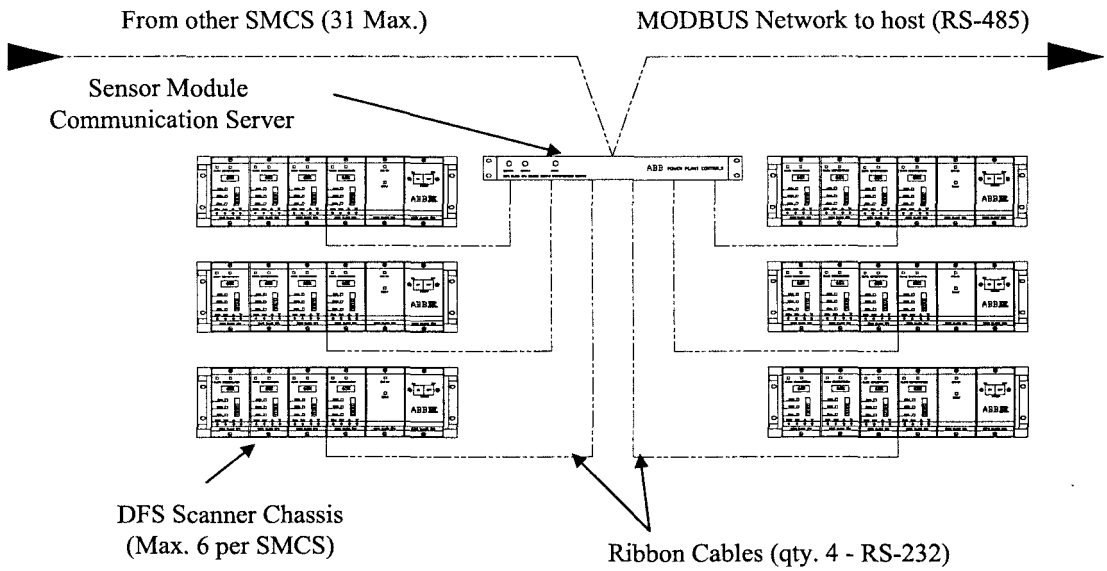

Figure 10 –SMCS Configuration

FLAME EXPLORER SOFTWARE (OPTION)

ABB Inc. offers an optional flame scanner data trending and archiving software package that runs on a personnel computer connected to one or more SMCS. This package, called ***Flame Explorer***, can be used to assist plant personnel in initial setup of the scanner system and monitoring during routine operation. The package can be used on a single SMCS (up to 24 scanners) using the RS-232 output or can be used with multiple SMCS daisy chained together using the RS-485 output.

Flame Explorer allows the user to trend in real time, the two measure parameters (DC intensity and Flicker Frequency) for each scanner. One to four scanners can be displayed simultaneously and are selected using simple drop down boxes. Data from any or all of the scanners can be archived using a simple channel selection sheet. Although the software is not required for scanner set-up, it can be used to remotely configure each scanner or a group of scanners. An ID password installed in the software and a hardware jumper on the Safe Flame DFS sensor module locks out programming capability to keep unqualified personnel from adjusting the flame scanners. Figures 11 and 12 show some of the screens available with ***Flame Explorer.***

IP7_032484

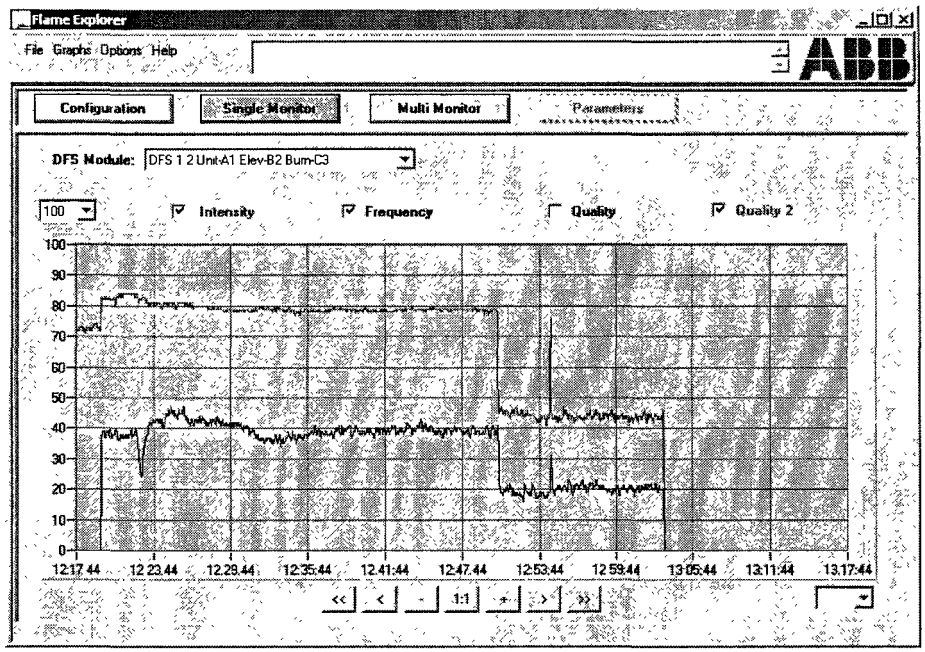

Figure 11 – Trend graph for one flame scanner

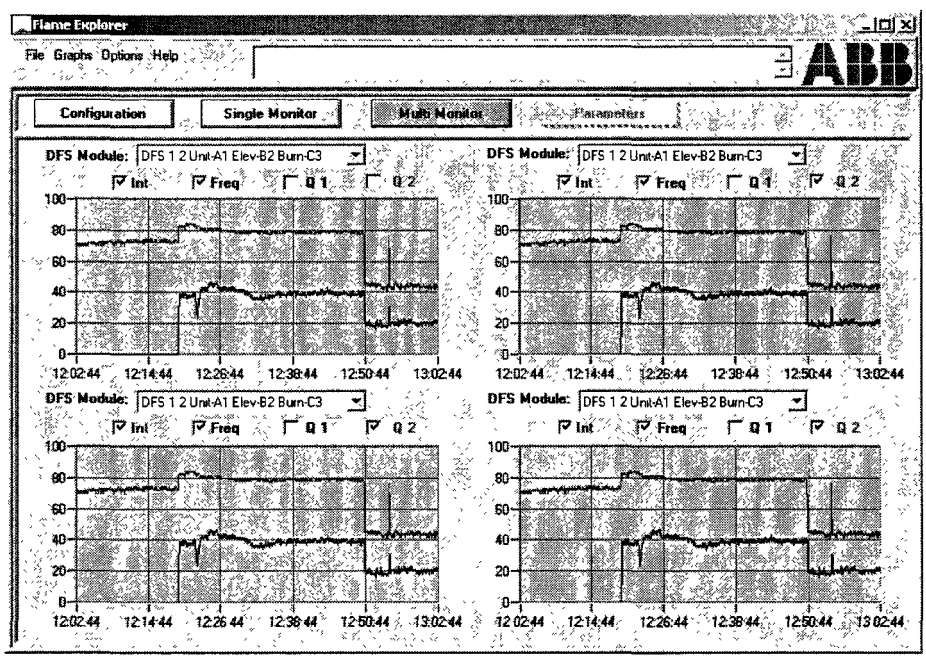

Figure 12 – Trend graph from four flame scanners

GENERAL SPECIFICATIONS

Safe Flame™ DFS Chassis and Power Supply

- Environmental: 0 to 60°C (32°F to 140°F) non-condensing
- Chassis Input Voltage: 120/240 (+10%) VAC @ 45 to 65 Hz
- Power Input Protection: Metal oxide varistor/input circuit breaker/fuse
- Chassis Mounting Position: Restricted to horizontal position, canted position prohibited

Safe Flame™ DFS Sensor Module

- Environmental: 0 to 60 °C (32 °F to 140 °F) non-condensing
- Microprocessor: Motorola MC68HC11E1FN (2M Hz)
- A/D Converter: 12 bit, 2000 Hz sample rate w/10μ second settling time
- Visual Outputs: 10 Element LED Bar and
  4 Character Alpha-Numeric Display
- Contact Outputs: Qty 2, Form C
- Contact Rating Switched Load: 2 A Maximum
  500 V Maximum
  100 VA Maximum
- Contact Rating Inrush Current: 20 A for 10 microseconds
  4 A for 10 seconds
  2 A for 100 seconds
- TTL Outputs: Qty 3, Open Collector
- Digital Output: RS-232, VT100 Terminal Compatible
- Analog outputs: Qty 2, Isolated 4-20 ma, non-isolated 0–1 ma
- Digital Output: RS-232, VT100 Terminal Compatible
- Analog outputs: Qty 2, Isolated 4-20 ma, non-isolated 0–1 ma

Safe Flame™ DFS 2/4 and Chassis Fault Module (optional)

- Environmental: 0 to 60 °C (32 °F to 140 °F) non-condensing
- Contact Outputs: Qty 2, Form C
- Contact Rating Switched Load: 2 A Maximum
  500 V Maximum
  100 VA Maximum
- Contact Rating: Inrush Current: 20 A for 10 microseconds
  4 A for 10 seconds
  2 A for 100 seconds

IP7_032486

Through The Windbox Fiber Optic Flame Scanner

- Electronics Ambient Temp: -18 to 60° C (0 to 140 °F)
- Fireside Scanner Head Temp: 482° C (900 °F)
- Nominal length: 33 to 126"
- Max Diameter: 5"
- Purge/Cooling air: 30 SCFM @ 6" wg
- Mounting: Twist lock to end of 2" guide pipe
- Electrical Supply: +/- 15 Vdc, nominally 100 ma
- Output: 0 to 2 ma
- Dynamic light range: 10^5 fixed
- Connector: Stainless Steel ¼ turn connector with ½" NPT
- Photodiode: Visible light or Infrared
- Photodiode Response Range: Visible light - 450 to 700 nm, Infrared - 700 to 1100 nm
- Fuels: Oil, Coal or any combination of the two

Wall Mount Fiber Optic Flame Scanner (Cyclones)

- Electronics Ambient Temp: -18 to 60° C (0 to 140 °F)
- Fiber Optic Cable Max Temp: 482° C (900 °F)
- Lens O-ring Max. temp: -54 to 232° C (-65 to 450° F)
- Nominal length: -54 to 232° C (-65 to 450° F)
- Fiber cable length: 110" or 360"
- Purge/Cooling air: 6-10 SCFM
- Mounting: 1" cam groove
- Electrical Supply: +/- 15 Vdc, nominally 100 ma
- Output: 0 to 2 ma
- Dynamic light range: 10^5 fixed
- Connector: Stainless Steel ¼ turn connector with ½" NPT
- Photodiode: Visible light or Infrared
- Photodiode Response Range: Visible light - 450 to 700 nm, Infrared - 700 to 1100 nm
- Fuels: Oil, Coal or any combination of the two

IP7_032487

Contact

For additional information, pricing, and delivery contact your local ABB representative or:

ABB Inc.
Utility Plant Automation
2 Waterside Crossing
Suite 200
Windsor, CT. 06095

Mr. Jim Niziolek
Product Manager, Boiler Sensors
Phone: 860-285-6775
E-mail:james.m.niziolek@us.abb.com

IP7_032488

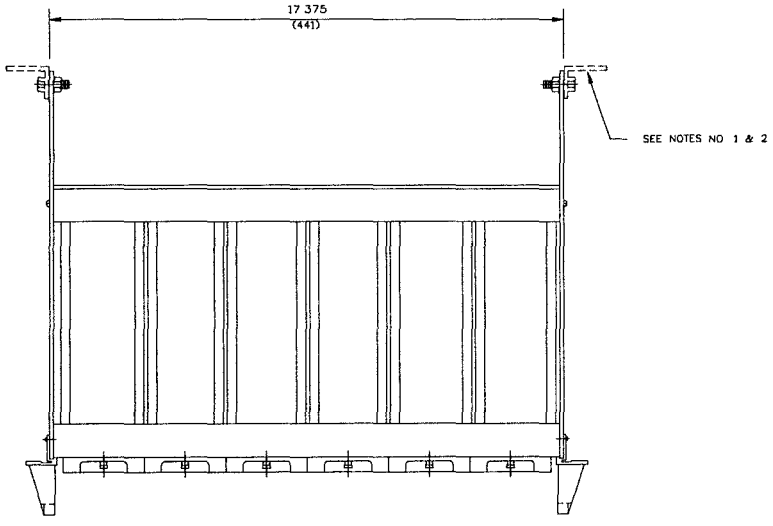

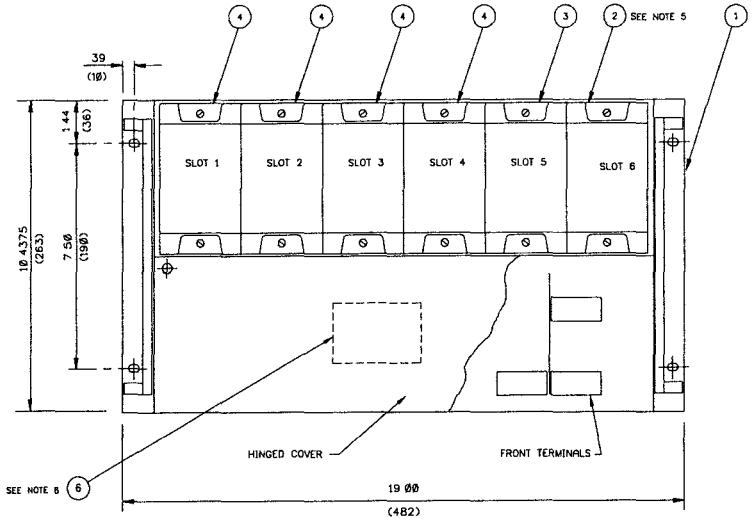

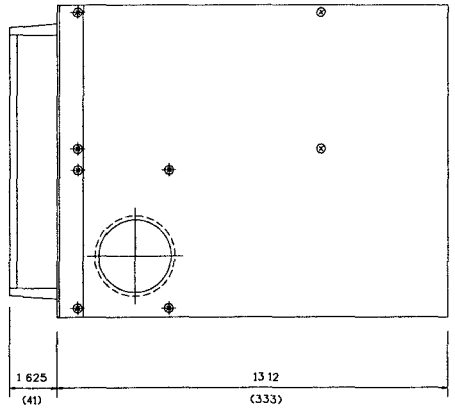

* SEE NOTE 3
** SEE MODULE SELECTION TABLE FOR QUANTITY

ITEM NO	QTY	PART NUMBER	DRAWING NO	DESCRIPTION
1	1	C13-94598	D-20-0-1101	FRONT ACCESS CHASSIS SUB-ASSEMBLY
2	1	C86-80741	B232655-014	POWER SUPPLY MODULE
3	**	C86-80742	B232655-015	2/4 FLAME AND FAULT ALARM MODULE
4	**	C86-94639	B232655-016	SENSOR MODULE
5	*	C86-80739	D232656-005	BLANK MODULE
6	1	C66-92834	B232656-030	DATA PLATE

SEE NOTE 4

CHASSIS PART NO & BLANK MODULE SELECTION TABLE

TYPE	ASSEMBLY PART NO	REQ'D ITEM 3	SLOT LOCATION	QTY ITEM 4	SLOT LOCATION	QTY ITEM 5	SLOT LOCATION
1	C13-94506	1	5	4	1,2,3,4	NONE	NONE
2	C13-94506-220	1	5	4	1,2,3,4	NONE	NONE
3	C13-94507	0	——	4	1,2,3,4	1	5
4	C13-94507-220	0	——	4	1,2,3,4	1	5
5	C13-94508	0	——	3	1,2,3	2	4,5
6	C13-94508-220	0	——	3	1,2,3	2	4,5
7	C13-94509	0	——	2	1,2	3	3,4,5
8	C13-94509-220	0	——	2	1,2	3	3,4,5
9	C13-94510	0	——	1	1	4	2,3,4,5
10	C13-94510-220	0	——	1	1	4	2,3,4,5
11	C13-94511	1	5	3	1,2,3	1	4
12	C13-94511-220	1	5	3	1,2,3	1	4

NOTES

1 FOR BACK PANEL MOUNT (INSTEAD OF RACK MOUNTING AS SHOWN) ADD (2) VERTICAL PROFILE, ELMA #66-175-36, (8) M4X10 SCREWS, ELMA #1904-12, (8) M4 HEX NUTS ELMA #1907-90, MOUNTING KIT PART NO C13-94624

2 REAR PROFILE MOUNTING HOLES SAME AS FRONT PROFILE (ITEM NO 1)

3 IF BLANK MODULES ARE REQUIRED SEE THE BLANK MODULE SELECTION TABLE ABOVE FOR ITEMS 4, 5 AND 6 QUANTITIES AND LOCATIONS

4 UNLESS SPECIFIED OTHERWISE, A TYPE 1 CHASSIS, P/N C13-94506, IS THE STANDARD FRONT ACCESS CHASSIS SUPPLIED FOR USE ON TANGENTIAL FIRED BOILERS

5 SWITCH ON POWER SUPPLY PC BOARD ENABLES 115V OR 230V OPERATION

6 CENTER DATA PLATE ON INSIDE COVER SO INFORMATION CAN BE READ WITH COVER DOWN

REF DWG

EXTERNAL CONNECTION DIAG FRONT TERMINALS - D-20-0-0118

SAFE FLAME™ DFS
FINAL CHASSIS ASSEMBLY FRONT ACCESS
-STANDARD-

THIS DRAWING IS THE PROPERTY OF ABB INC WINDSOR CONNECTICUT U S A 06095

ABB

THIS DOCUMENT CONTAINS PROPRIETARY DATA AND MAY NOT BE REPRODUCED OR DISCLOSED WITHOUT PERMISSION OF ABB INC

REV	DATE	DWN	APPV'S	REVISION NOTE
12	12/4/98	SJI	PHC	CHANGED POWER SUPPLY MODULE
13	6/5/99	SJI	PHC	CHANGED SELECTION TABLE

DRAWING SCALE NONE
PLOT SCALE 1 1
PATH D:/STARD/70200110D
PROJECT NUMBER STANDARD
DRAWING NUMBER D-20-0-1100
REV 13

CE, TÜV, OR CSA SENSITIVE

IP7_032489

ITEM	NO REQ'D	PART NO	DWG NO	DESCRIPTION	MAT'L SPEC
1	1	C60-97441	———	COOLING AIR MANIFOLD ASSEMBLY	———
2	1	902-2491-AB	———	2.00" (51) SCH 40 PIPE (T.O.E. 2.00" (51) N.P.T.) "C" = "A" - 13.25" (337)	154
3	1	902-0385-AA	———	GUIDPIPE SCANNER BODY HOUSING	———

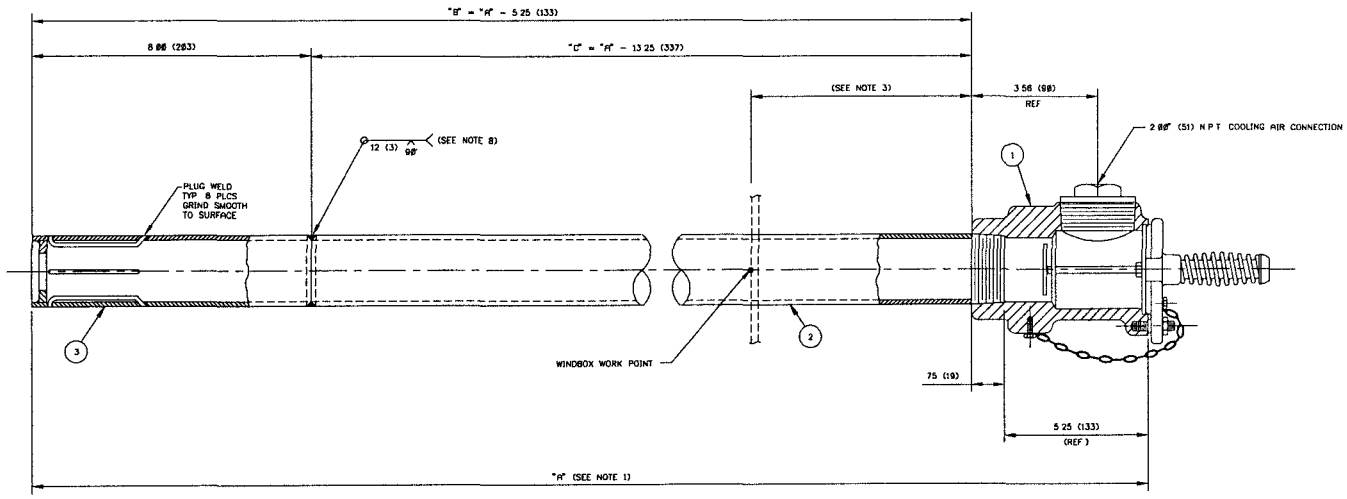

NOTES

1. FOR "A" DIMENSION SEE WINDBOX OR BURNER ARRANGEMENT DRAWING. DIMENSION "A" NOT TO EXCEED 108.44" (2754)
2. "L" DIMENSION ON FLAME SCANNER ASSEMBLY EQUALS "A" + .38" (10)
3. PREFFERED LENGTH IS 13.81" (351) OR LONGER. MINIMUM LENGTH TO BE 7.81" (198)
4. QUANTITIES LISTED ABOVE ARE FOR ONE FLAME SCANNER GUIDE PIPE ASSEMBLY
5. PAINT IN ACCORDANCE WITH SHOP PAINT STANDARD DRAWING C-985-0671 ITEM NO. 8.0
6. APPLY FEL PRO C-100 HI-TEMP ANTI SEIZE OR EQUAL TO ALL THREADS AT ASSEMBLY
7. THE COOLING AIR SUPPLY FROM IGNITOR OR SEAL AIR SYSTEM MUST BE MAINTAINED GREATER THAN 4.00" (102) W.G. ABOVE FURNACE PRESSURE FOR ALL OPERATING CONDITIONS
8. INTERNAL & EXTERNAL AREA OF WELD TO BE GROUND SMOOTH AND FREE OF WELD
9. ALL DIMENSIONS ARE SHOWN IN INCHES WITH MILLIMETER EQUIVALENT IN PARENTHESES (---)

MATERIAL SPECIFICATION CHART		
MATERIAL	SPECIFICATION	PURCHASE INSTRUCTION
154	CARBON STEEL A-120	———
213	MALLEABLE IRON A-197	———
272	CARBON STEEL ASTM A-569	———
297	CARBON STEEL A-307	———

ASSEMBLY NO 902-2491-AA

FLAME SCANNER GUIDE PIPE ASSEMBLY
FOR FLAME SCANNER

-STANDARD-

THIS DRAWING IS THE PROPERTY OF ABB AUTOMATION INC. WINDSOR CONNECTICUT U.S.A. 06095

ABB

THIS DOCUMENT CONTAINS PROPRIETARY DATA AND MAY NOT BE REPRODUCED OR DISCLOSED WITHOUT PERMISSION OF ABB AUTOMATION INC

REV	DATE	CH'D	APPR'D	REVISION NOTE
00	1/9/91	LG	JA	INITIAL ISSUE
01	11/17/92	RJS	MJ	REVISED & RE-DRAWN ON AUTOCAD
02	1/7/98	LAB	MJ	NEW ITEM NO. 3
03	8/27/01	SM	WMC	REVISED NOTE NO. 8
04	12/3/01	SM	WMC	CHANGED PROJ # ITEM NO. 3

DRAWING SCALE NONE — PLOT SCALE 1 : 1
PATH: D902491
PROJECT STANDARD — REV N
SIZE D-902-2491 — 04
ORIGINAL 1 CONTROLS

IP7_032490

VAP3™ Designed by Bob Brandt for

EASTERN INSTRUMENTS

VAP3™ /PA

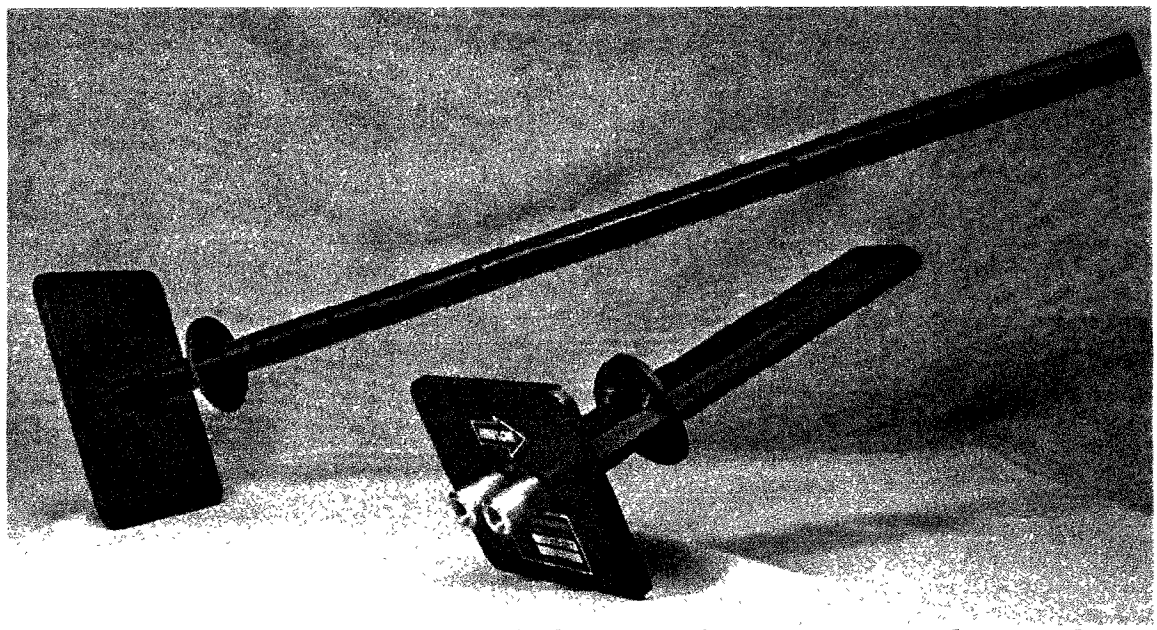

Industrial Velocity Averaging Parallel Plate Pitot for Heavy Particulate Applications

The VAP3™ airflow measurement system is ideal for either new or retro-fit industrial applications where the air-stream is heavily laden with particulate. When inserted to traverse a duct or conduit, the VAP3™ provides an accurate, differential pressure output signal allowing for precise airflow measurement or control of your process. Due to its unique Velocity Averaging and Parallel Plate patented design, with all pressure sensing holes facing away from the direction of flow, the VAP3™ can be installed in locations where heavy particulate and random flow distribution is present. Each VAP3™ probe has multiple differential pressure sensing ports, specifically located to provide a full traverse of the duct. For larger ducts, an array of probes with differential pressure lines separately manifolded, can be installed to ensure a fully averaged airflow sampling. The VAP3™ primary flow sensor is erosion and corrosion resistant, capable of withstanding process temperatures from –40 to 700°F. The VAP3™ probe is constructed from a single piece series 6063 aluminum extrusion with a Teflon hard anodized metallurgical bond applied, yielding a surface hardness of Rockwell 65C. The VAP3™ is ideally designed for primary and secondary airflow in a power plant where fly ash carryover is present.

The Technology

To accurately measure the randomly distributed airflow through a duct, the VAP3™ patented dual chamber design (Figure 1) incorporates a multi-sensing point configuration; patent #5,402,687. The VAP3™ generates a differential signal with the high pressure (P_H) ports located on the trailing edge and the low pressure (P_L) ports located on the parallel surfaces, normal to the flow. Existing duct insertion flow measurement technology cross-sectional area designs create vortices, which tend to allow particulate buildup on the trailing edge surfaces. The VAP3™ cross-section design generates negligible vortices, allowing air to flow without turbulence across the surface of the VAP3™, ensuring no particulate buildup where the sensing ports are located (Figure 2).

In existing multipoint Pitot configurations, dramatic measurement errors can occur when random flow distribution of airflow is found within the duct. For example, a 37% difference in air velocity across the duct will exhibit an error of 7% in flow measurement output. To achieve the highest level of accuracy, each point of measurement's differential pressure should be individually square rooted within the differential pressure formula, whereas in existing multipoint Pitot technologies, the sum of the differential pressures is square rooted by nature of using a single differential pressure transmitter. The patented VAP3™ velocity averaging design compensates for this phenomenon; patent #5,753,825. By specifically shaping the inside of the high pressure ports, it reduces the exit coefficient, allowing the air to escape out of the measurement chamber easier than air enters. Therefore the varying high pressures entering the multiple ports of the chamber are more equalized, negating error. Now using the example above, a 37% offset in velocity variation across a duct yields only a 1/2% error.

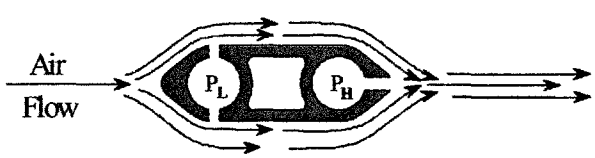

Figure 1

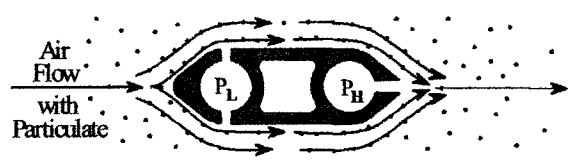

Figure 2

IP7_032492

VAP^{3}™ /PA

Industrial Velocity Averaging Parallel Plate Pitot for Heavy Particulate Applications

Product Features

Primary Flow Element. The VAP^{3}™ provides a differential pressure signal output linear to flow, therefore there are no correction factors required in order to linearize the output signal. Accuracy is within ± 1% (linearity and repeatability).

Velocity Averaging Technology. Through the use of patented specially shaped high pressure ports, the VAP^{3}™ averages the extreme flow distribution to minimize pressure averaging error.

No Air Straighteners Required. The VAP^{3}™ flow measurement system is designed to measure the normal vector of both the high and low pressure components thus negating the effects of airflow pitch and yaw up to 30°, which are found in highly turbulent flow locations.

Measures Accurately Independent of Velocity Changes. High and low pressure ports are located so that their associated pressure gradients do not vary with changes in velocity.

Durable Materials of Construction. The VAP^{3}™ is constructed from extruded 6063 series aluminum with a final process Teflon hard anodized coating, yielding a durable surface hardness of Rockwell 65C.

Basic Installation. Each VAP^{3}™ probe can be inserted into the duct utilizing a pre-fabricated weld on insertion port. When multiple probes are needed within the duct, the high and low pressure sensing ports can each be manifolded together.

Negligible Pressure Loss. Due to the streamline, narrow cross-section of the Parallel Plate Pitot design, the VAP^{3}™ will not restrict the airflow, therefore there will be minimal, if not negligible pressure drop across the measurement area.

In Duct Sensors are Passive. There are no active, electronic components or moving parts that are installed within the air stream, therefore eliminating maintenance costs and ensuring reliability.

Installation

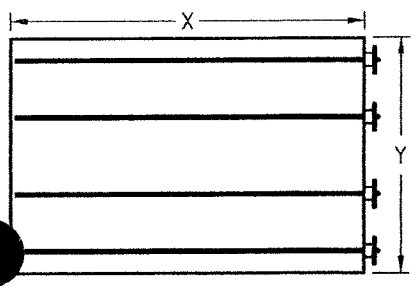

For Rectangular and Square Duct			
Y	Minimum QTY	Y	Minimum QTY
6" to 8"	1	38" to 60"	4
10" to 26"	2	62" to 116"	5
28" to 36"	3	118" +	Consult Factory

For Circular Duct	
D	Minimum QTY
6" to 18"	2
20" to 116"	3

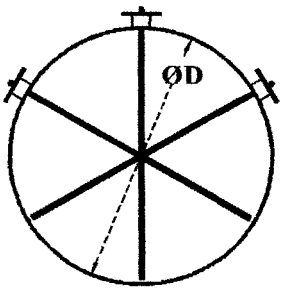

Product Drawing with Dimensional Chart

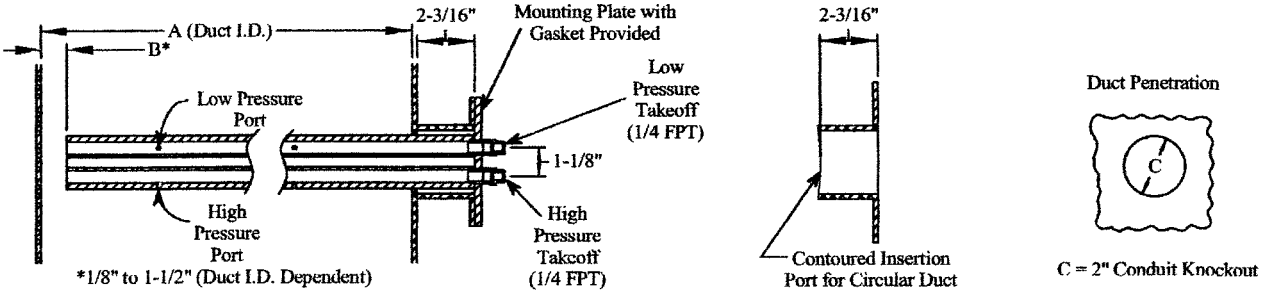

Typical Flow Equations

$$Q_{PA} = 1097 \times A_e \times \left(\frac{\Delta P^{0.465}}{\rho^{0.5}} \right) \quad \text{where } A_e \approx 1.0 \times A_{Duct}$$

(A_e based on typical approach values in a 12" ID duct)

EASTERN INSTRUMENTS

416 LANDMARK DRIVE · WILMINGTON, NC 28412
Tel: 910-392-2490 · Fax: 910-392-2123
www.easterninstruments.com

Maintenance Enterprises, Inc
a Crown Enterprises Company

ADVANCED BURNER TECHNOLOGIES

Installation of Low NOx Burners, & Turning Vanes

Intermountain Power Unit #3

MEI Proposal # M-1912-MS

ORIGINAL

IP7_032495

TABLE OF CONTENTS

I Pricing Page

II Safety (3 Years) & Insurance

III P-3 Schedule

IV Subcontractor List

V T & M Rates

VI Stamps "R", "S", "U"

VII Exceptions

VIII Clarifications

Maintenance Enterprises, Inc

a Crown Enterprises Company

August 20, 2003

Mr. Sal Ferrara
Project Manager
Advanced Burner Technologies
350 Main Street
Suite 5
Bedminster, New Jersey 07921

RE: **Intermountain Power Service Corp. – Unit #2**
Low NOx Project – Installation of 48 New Burners & Turning Vanes
MEI Proposal #M-1912-MS

Dear Sal:

MEI is pleased to submit a lump sum bid in regard to the above-mentioned work. This bid is based on no ACM and/or lead paint. We have priced this bid based upon working one (1) ten hour shift, seven (7) days a week for two (2) weeks pre-outage. The outage is to be worked at one (1) ten (10) hour shift, seven (7) days a week, for twenty-eight (28) days.

Included in this bid is the following:

- Supervision
- Labor
- Pick-up trucks
- Welding supplies
- Two forklifts
- 3-8-pack welding machines
- Tool trailer
- Office trailer

Maintenance Enterprises, Inc. 703 E. Gardena Blvd. Gardena, CA 90248
Tel. (310) 329-0004 Fax. (310) 329-0006
www.Crownenterprises.com

- Lunch trailer
- Equipment & tools
- QC supervisor
- Safety supervisor
- Insulation contractor
- Electrical contractor
- Port-A-Johns
- Telephones

Items to be supplied by ABT:

- Construction drawings
- All materials
- ABT representative as needed

Items to be supplied by Intermountain Power:

- Electricity – 480 3 phase/110 – 20 AMP
- Drinking water
- Service air to 90psi
- Location to place tool trailer
- Two telephone hook-ups (bills to be paid by MEI)
- Trash dumpsters
- Metal dumpsters

There is no state, federal, city, or county taxes in this bid.

This contract is contingent up acceptance by all parties.

If you should have any questions, please do not hesitate to contact me at your convenience.

Sincerely,

Mike Simonds

Mike Simonds
General Manager
Enc

Maintenance Enterprises, Inc. 703 E. Gardena Blvd. Gardena, CA 90248
Tel. (310) 329-0004 Fax. (310) 329-0006
www.Crownenterprises.com

2

Maintenance Enterprises, Inc.
A Crown Enterprises company

SAFETY INFORMATION
January 1, 2003

Number of OSHA Recordable Cases	2000	4
	2001	3
	2002	3
Number of Lost Time Cases	2000	0
	2001	1
	2002	0
Number of Lost Work Days	2000	0
	2001	1
	2002	0
Number of Fatalities	2000	0
	2001	0
	2002	0
Number of Manhours Worked	2000	290,366
	2001	1,089,167
	2002	450,544
Total OSHA Recordable Incident Rate	2000	2.76
	2001	0.55
	2002	1.33
Lost Time Incident Rate	2000	0.00
	2001	0.18
	2002	0.00
Worker's Compensation Experience Modifier	2000	0.58
	2001	0.74
	2002	0.70

ACORD CERTIFICATE OF LIABILITY INSURANCE

OP ID GB MAINT-1

DATE (MM/DD/YY) 11/04/02

Hibernia Rosenthal
411 Colonial Drive
Baton Rouge LA 70896-6068
Phone: 225-381-8812 Fax: 225-381-8510

THIS CERTIFICATE IS ISSUED AS A MATTER OF INFORMATION ONLY AND CONFERS NO RIGHTS UPON THE CERTIFICATE HOLDER. THIS CERTIFICATE DOES NOT AMEND, EXTEND OR ALTER THE COVERAGE AFFORDED BY THE POLICIES BELOW.

INSURERS AFFORDING COVERAGE

INSURED

Maintenance Enterprises, Inc.
c/o Crown Enterprises, Inc.
Debbie Dabadie
PO Box 120
White Castle LA 70788

INSURER A.	Steadfast Insurance Co.
INSURER B	Steadfast Insurance Co.
INSURER C	Zurich American Insurance Co.
INSURER D	
INSURER E.	Firemans Fund Insurance Co.

COVERAGES

THE POLICIES OF INSURANCE LISTED BELOW HAVE BEEN ISSUED TO THE INSURED NAMED ABOVE FOR THE POLICY PERIOD INDICATED. NOTWITHSTANDING ANY REQUIREMENT, TERM OR CONDITION OF ANY CONTRACT OR OTHER DOCUMENT WITH RESPECT TO WHICH THIS CERTIFICATE MAY BE ISSUED OR MAY PERTAIN, THE INSURANCE AFFORDED BY THE POLICIES DESCRIBED HEREIN IS SUBJECT TO ALL THE TERMS, EXCLUSIONS AND CONDITIONS OF SUCH POLICIES. AGGREGATE LIMITS SHOWN MAY HAVE BEEN REDUCED BY PAID CLAIMS

INSR LTR	TYPE OF INSURANCE	POLICY NUMBER	POLICY EFFECTIVE DATE (MM/DD/YY)	POLICY EXPIRATION DATE (MM/DD/YY)	LIMITS	
A	GENERAL LIABILITY X COMMERCIAL GENERAL LIABILITY CLAIMS MADE X OCCUR X Pollution GEN'L AGGREGATE LIMIT APPLIES PER: POLICY PRO-JECT LOC	BOG9307179-00	11/01/02	11/01/03	EACH OCCURRENCE FIRE DAMAGE (Any one fire) MED EXP (Any one person) PERSONAL & ADV INJURY GENERAL AGGREGATE PRODUCTS - COMP/OP AGG	$ 1,000,000. $ 100,000 $ 5,000. $ 1,000,000. $ 2,000,000. $ 2,000,000.
C	AUTOMOBILE LIABILITY ANY AUTO ALL OWNED AUTOS X SCHEDULED AUTOS HIRED AUTOS NON-OWNED AUTOS	BAPP9307177-00	11/01/02	11/01/03	COMBINED SINGLE LIMIT (Ea accident) BODILY INJURY (Per person) BODILY INJURY (Per accident) PROPERTY DAMAGE (Per accident)	$ 1,000,000 $ $ $
	GARAGE LIABILITY ANY AUTO				AUTO ONLY - EA ACCIDENT OTHER THAN AUTO ONLY: EA ACC AGG	$ $ $
B	EXCESS LIABILITY X OCCUR CLAIMS MADE DEDUCTIBLE X RETENTION $ 10000	EOG9307186-00	11/01/02	11/01/03	EACH OCCURRENCE AGGREGATE	$ 5000000 $ 5000000 $ $ $
	WORKERS COMPENSATION AND EMPLOYERS' LIABILITY				WC STATUTORY LIMITS OTHER E.L. EACH ACCIDENT E.L. DISEASE - EA EMPLOYEE E.L. DISEASE - POLICY LIMIT	$ $ $
	OTHER Rent/Leased Equip	MXI97851593	11/10/02	11/10/03	Per Item Per Occur	500,000 1,000,000

DESCRIPTION OF OPERATIONS/LOCATIONS/VEHICLES/EXCLUSIONS ADDED BY ENDORSEMENT/SPECIAL PROVISIONS

Policies include Blanket Waiver of Subrogation, Additional Insureds and 30 Day Notice of Cancellation where required by written contract.

CERTIFICATE HOLDER | Y | ADDITIONAL INSURED; INSURER LETTER: ____

BLANK-1

SAMPLE

CANCELLATION

SHOULD ANY OF THE ABOVE DESCRIBED POLICIES BE CANCELLED BEFORE THE EXPIRATION DATE THEREOF, THE ISSUING INSURER WILL ENDEAVOR TO MAIL 30 DAYS WRITTEN NOTICE TO THE CERTIFICATE HOLDER NAMED TO THE LEFT, BUT FAILURE TO DO SO SHALL IMPOSE NO OBLIGATION OR LIABILITY OF ANY KIND UPON THE INSURER, ITS AGENTS OR REPRESENTATIVES.

AUTHORIZED REPRESENTATIVE

Brenda Riddle

© ACORD CORPORATION 1988

ACORD CERTIFICATE OF INSURANCE

DATE (MM/DD/YY) 08-06-98

PRODUCER

LCTA - SIF
P.O. Box 1709
Baton Rouge, LA 70821-1709

THIS CERTIFICATE IS ISSUED AS A MATTER OF INFORMATION ONLY AND CONFERS NO RIGHTS UPON THE CERTIFICATE HOLDER. THIS CERTIFICATE DOES NOT AMEND, EXTEND OR ALTER THE COVERAGE AFFORDED BY THE POLICIES BELOW.

COMPANIES AFFORDING COVERAGE

COMPANY A LA Commerce & Trade Assoc.-SIF

INSURED

Maintenance Enterprises, Inc.
P.O. Box 120
White Castle, LA 70788

COMPANY B

COMPANY C

COMPANY D

COVERAGES

THIS IS TO CERTIFY THAT THE POLICIES OF INSURANCE LISTED BELOW HAVE BEEN ISSUED TO THE INSURED NAMED ABOVE FOR THE POLICY PERIOD INDICATED. NOTWITHSTANDING ANY REQUIREMENT, TERM OR CONDITION OF ANY CONTRACT OR OTHER DOCUMENT WITH RESPECT TO WHICH THIS CERTIFICATE MAY BE ISSUED OR MAY PERTAIN, THE INSURANCE AFFORDED BY THE POLICIES DESCRIBED HEREIN IS SUBJECT TO ALL THE TERMS, EXCLUSIONS AND CONDITIONS OF SUCH POLICIES. LIMITS SHOWN MAY HAVE BEEN REDUCED BY PAID CLAIMS.

CO LTR	TYPE OF INSURANCE	POLICY NUMBER	POLICY EFFECTIVE DATE (MM/DD/YY)	POLICY EXPIRATION DATE (MM/DD/YY)	LIMITS	
	GENERAL LIABILITY				GENERAL AGGREGATE	$
	COMMERCIAL GENERAL LIABILITY				PRODUCTS-COMP/OP AGG	$
	CLAIMS MADE / OCCUR				PERSONAL & ADV INJURY	$
	OWNER'S & CONT PROT				EACH OCCURRENCE	$
					FIRE DAMAGE (Any one fire)	$
					MED EXP (Any one person)	$
	AUTOMOBILE LIABILITY				COMBINED SINGLE LIMIT	$
	ANY AUTO				BODILY INJURY (Per person)	$
	ALL OWNED AUTOS					
	SCHEDULED AUTOS				BODILY INJURY (Per accident)	$
	HIRED AUTOS					
	NON-OWNED AUTOS				PROPERTY DAMAGE	$
	GARAGE LIABILITY				AUTO ONLY - EA ACCIDENT	$
	ANY AUTO				OTHER THAN AUTO ONLY:	
					EACH ACCIDENT	$
					AGGREGATE	$
	EXCESS LIABILITY				EACH OCCURRENCE	$
	UMBRELLA FORM				AGGREGATE	$
	OTHER THAN UMBRELLA FORM					$
	WORKERS COMPENSATION AND EMPLOYERS' LIABILITY				STATUTORY LIMITS	
A	THE PROPRIETOR/ PARTNERS/EXECUTIVE OFFICERS ARE: INCL / EXCL	10536	01-01-98	Continuous until Cancelled	EACH ACCIDENT	$ 1,000,000
					DISEASE - POLICY LIMIT	$ 1,000,000
					DISEASE - EACH EMPLOYEE	$ 1,000,000
	OTHER					

DESCRIPTION OF OPERATIONS/LOCATIONS/VEHICLES/SPECIAL ITEMS

Excess Carrier: National Union Fire Insurance Company of Louisiana

CERTIFICATE HOLDER

SAMPLE

CANCELLATION

SHOULD ANY OF THE ABOVE DESCRIBED POLICIES BE CANCELLED BEFORE THE EXPIRATION DATE THEREOF, THE ISSUING COMPANY WILL ENDEAVOR TO MAIL 30 DAYS WRITTEN NOTICE TO THE CERTIFICATE HOLDER NAMED TO THE LEFT, BUT FAILURE TO MAIL SUCH NOTICE SHALL IMPOSE NO OBLIGATION OR LIABILITY OF ANY KIND UPON THE COMPANY, ITS AGENTS OR REPRESENTATIVES.

AUTHORIZED REPRESENTATIVE William H Cormier

©ACORD CORPORATION 1993

IP7_032503

3

Activity ID	Activity Description	Orig Dur	Early Start	Early Finish
Pre-Shutdown Activities				
00010	Supervision on Site	10	16FEB04 07:00	16FEB04 16:59
00020	Tool Trailer on Site	10	16FEB04 07:00	16FEB04 16:59
00030	Office Trailer on Site	10	16FEB04 07:00	16FEB04 16:59
00040	Set up POs	20	17FEB04 07:00	18FEB04 16:59
00050	Set up Subcontractors	30	17FEB04 07:00	19FEB04 16:59
00060	Receive Equipment	40	16FEB04 07:00	19FEB04 16:59
00070	Receive Cart Materials	20	17FEB04 07:00	18FEB04 16:59
00080	Receive 1/8" Deck Plating	20	17FEB04 07:00	18FEB04 16:59
00090	Hook up Welding Machines	10	18FEB04 07:00	18FEB04 16:59
00100	Hook up Rigging	30	19FEB04 07:00	21FEB04 16:59
00110	Fabricate Burner Carts	50	19FEB04 07:00	23FEB04 16:59
00120	Install Deck Plate on all 8 Levels	60	19FEB04 07:00	24FEB04 16:59
00130	Stage New Burners on all Decks	80	22FEB04 07:00	29FEB04 16:59
00140	Install Support Rigging on Coal Piping as Needed	70	23FEB04 07:00	29FEB04 16:59
Shutdown Activities				
00150	Unit Off Line	0	26FEB04 12:00*	
00160	Unit Tagged Out	0	26FEB04 13:00*	
00170	Unit Ready for Work	0	26FEB04 13:00*	
00180	Check Clearances	0	26FEB04 13:00*	
00181	Remove First Burner Bellows	20	26FEB04 13:00	01MAR04 12:59

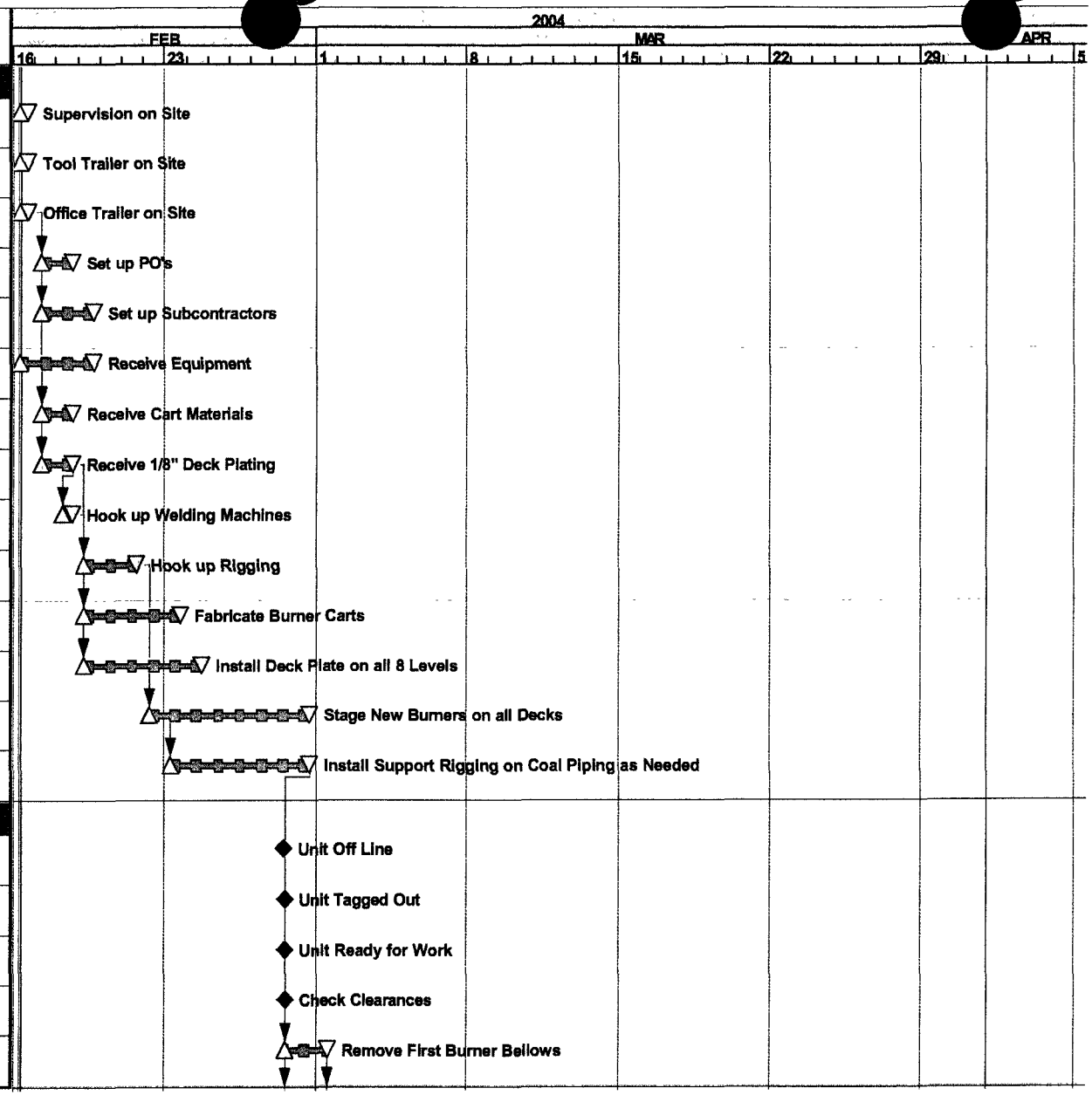

Start Date	16FEB04 07:00
Finish Date	26MAR04 15:59
Data Date	16FEB04 07:00
Run Date	20AUG03 10:52

Early Bar
Progress Bar

© Primavera Systems, Inc.

1912

Sheet 1 of 5

Intermountain Power - Delta, Utah

Lo-NOx Burner Replacement

Date	Revision	Checked	Approved

IP7_032505

Activity ID	Activity Description	Orig Dur	Early Start	Early Finish
00182	Load Bellows on Truck, Send to Shop	10	01MAR04 13:00	02MAR04 12:59
00183	Remove Second Burner Bellows	30	28FEB04 13:00	02MAR04 12:59
00184	Load on Truck, Send to Shop	10	02MAR04 13:00	03MAR04 12:59
00190	Remove Wiring & Tubing, Front Deck 4 (Elect.)	10	28FEB04 13:00	29FEB04 12:59
00200	Remove Wiring & Tubing, Rear Deck 4 (Elect.)	10	28FEB04 13:00	29FEB04 12:59
00201	Turning Vanes, Windbox A & D, Right & Left Side	90	29FEB04 13:00	09MAR04 12:59
00210	Remove Insulation, Front Deck 4 (Ins.)	10	29FEB04 13:00	01MAR04 12:59
00220	Remove Insulation, Rear Deck 4 (Ins.)	10	29FEB04 13:00	01MAR04 12:59
00230	Remove Burners, Front Deck 4	15	01MAR04 13:00	03MAR04 07:59
00240	Remove Burners, Rear Deck 4	15	01MAR04 13:00	03MAR04 07:59
00250	Remove Wiring & Tubing, Front Deck 3 (Elect.)	10	29FEB04 13:00	01MAR04 12:59
00260	Remove Wiring & Tubing, Rear Deck 3 (Elect.)	10	29FEB04 13:00	01MAR04 12:59
00270	Remove Insulation, Front Deck 3 (Ins.)	10	01MAR04 13:00	02MAR04 12:59
00280	Remove Insulation, Rear Deck 3 (Ins.)	10	01MAR04 13:00	02MAR04 12:59
00290	Remove Burners, Front Deck 3	15	02MAR04 13:00	04MAR04 07:59
00300	Remove Burners, Rear Deck 3	15	02MAR04 13:00	04MAR04 07:59
00310	Remove Wiring & Tubing, Front Deck 2 (Elect.)	10	01MAR04 13:00	02MAR04 12:59
00320	Remove Wiring & Tubing, Rear Deck 2 (Elect.)	10	01MAR04 13:00	02MAR04 12:59
00330	Remove Insulation, Front Deck 2 (Ins.)	10	02MAR04 13:00	03MAR04 12:59
00340	Remove Insulation, Rear Deck 2 (Ins.)	10	02MAR04 13:00	03MAR04 12:59
00350	Remove Wiring & Tubing, Front Deck 1 (Elect.)	10	02MAR04 13:00	03MAR04 12:59

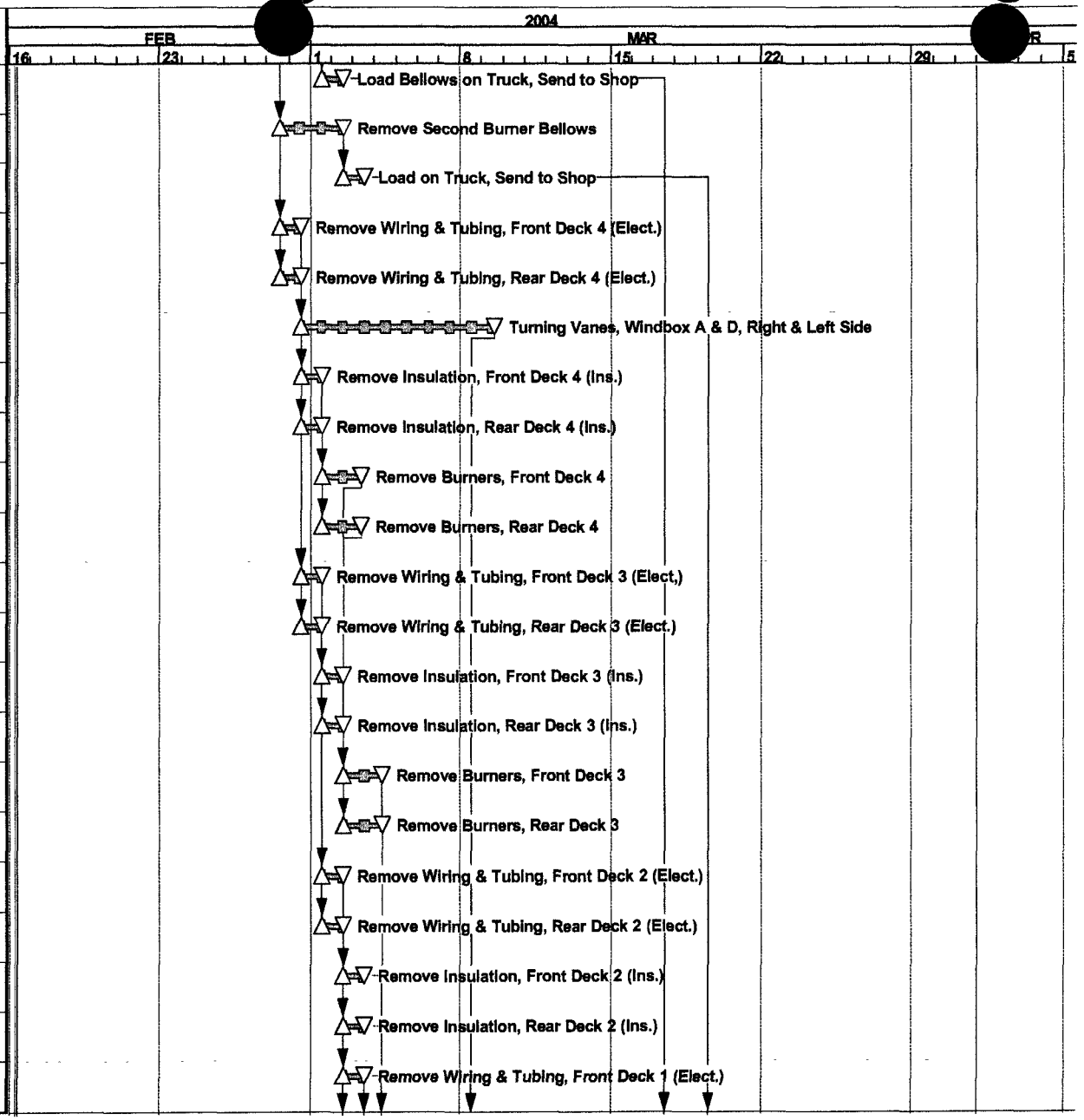

Start Date	16FEB04 07:00
Finish Date	26MAR04 15:59
Data Date	16FEB04 07:00
Run Date	20AUG03 10:52

Early Bar
Progress Bar

© Primavera Systems, Inc.

1912

Sheet 2 of 5

Intermountain Power - Delta, Utah

Lo-NOx Burner Replacement

Date	Revision	Checked	Approved

IP7_032506

Activity ID	Activity Description	Orig Dur	Early Start	Early Finish
00360	Remove Wiring & Tubing, Rear Deck 1 (Elect.)	10	02MAR04 13:00	03MAR04 12:59
00370	Remove Insulation, Front Deck 1 (Ins.)	10	03MAR04 13:00	04MAR04 12:59
00380	Remove Insulation, Rear Deck 1 (Ins.)	10	03MAR04 13:00	04MAR04 12:59
00390	Install Wiring for New Front Scanners (Elect.)	150	04MAR04 08:00	19MAR04 07:59
00400	Install Wiring for New Rear Scanners (Elect.)	150	04MAR04 08:00	19MAR04 07:59
00410	Remove Burners, Front Deck 2	15	04MAR04 08:00	05MAR04 12:59
00420	Remove Burners, Rear Deck 2	15	04MAR04 08:00	05MAR04 12:59
00430	Remove Burners, Front Deck 1	15	05MAR04 13:00	07MAR04 07:59
00440	Remove Burners, Rear Deck 1	15	05MAR04 13:00	07MAR04 07:59
00450	Install New Burners, Front Deck 4	25	06MAR04 08:00	08MAR04 12:59
00460	Install New Burners, Rear Deck 4	25	06MAR04 08:00	08MAR04 12:59
00461	Turning Vanes, Windbox B&E, Right & Left Side	90	08MAR04 13:00	17MAR04 12:59
00470	Insulate Front Deck 4 (Ins.)	20	08MAR04 13:00	10MAR04 12:59
00480	Insulate Rear Deck 4 (Ins.)	20	08MAR04 13:00	10MAR04 12:59
00490	Install New Burners, Front Deck 3	25	08MAR04 13:00	11MAR04 07:59
00500	Install New Burners, Rear Deck 3	25	08MAR04 13:00	11MAR04 07:59
00510	Hook up Wires & Tubing, Front Deck 4 (Elect.)	20	10MAR04 13:00	12MAR04 12:59
00520	Hook up Wires & Tubing, Rear Deck 4 (Elect.)	20	10MAR04 13:00	12MAR04 12:59
00530	Insulate Front Deck 3 (Ins.)	20	10MAR04 13:00	12MAR04 12:59
00540	Insulate Rear Deck 3 (Ins.)	20	10MAR04 13:00	12MAR04 12:59
00550	Install Burners, Front Deck 2	25	11MAR04 08:00	13MAR04 12:59

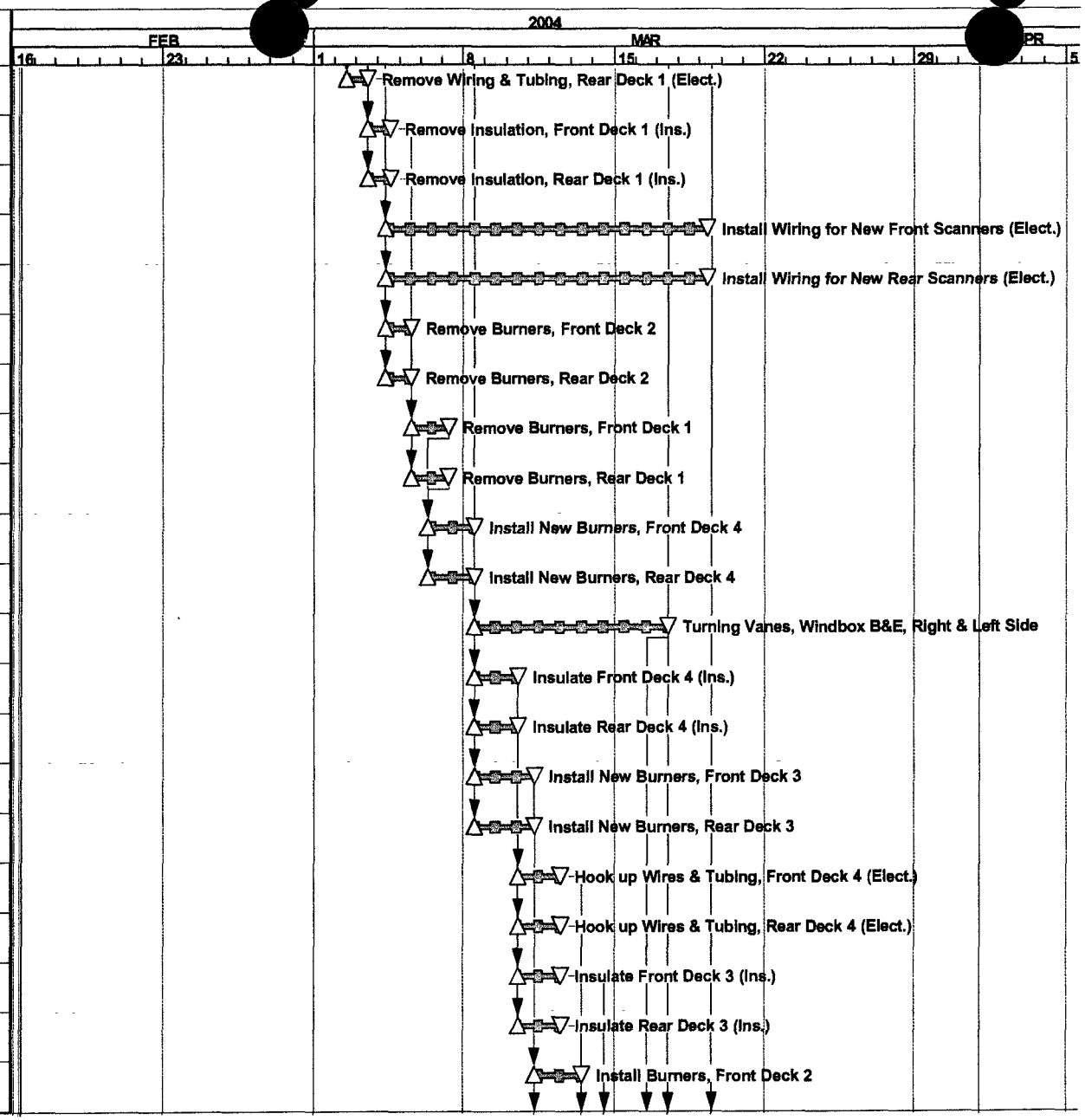

Start Date	16FEB04 07:00
Finish Date	26MAR04 15:59
Data Date	16FEB04 07:00
Run Date	20AUG03 10:52

Early Bar
Progress Bar

1912

Sheet 3 of 5

Intermountain Power - Delta, Utah

Lo-NOx Burner Replacement

Date	Revision	Checked	Approved

© Primavera Systems, Inc.

Activity ID	Activity Description	Orig Dur	Early Start	Early Finish
00560	Install Burners, Rear Deck 2	25	11MAR04 08:00	13MAR04 12:59
00561	Turning Vanes, Windbox F & C, Right & Left Side	80	16MAR04 13:00	24MAR04 12:59
00570	Hook up Wires & Tubing, Front Deck 3 (Elect.)	20	13MAR04 13:00	15MAR04 12:59
00580	Hook up Wires & Tubing, Rear Deck 3 (Elect.)	20	13MAR04 13:00	15MAR04 12:59
00590	Insulate Front Deck 2 (Ins.)	20	14MAR04 13:00	16MAR04 12:59
00600	Insulate Rear Deck 2 (Ins.)	20	14MAR04 13:00	16MAR04 12:59
00601	First Burner Bellows Returned & Reinstalled	40	17MAR04 13:00	21MAR04 12:59
00610	Install Burners, Front Deck 1	25	13MAR04 13:00	16MAR04 07:59
00620	Install Burners, Rear Deck 1	25	13MAR04 13:00	16MAR04 07:59
00621	Second Burner Bellows Returned & Reinstalled	30	19MAR04 13:00	22MAR04 12:59
00630	Insulate Front Deck 1 (Ins.)	20	16MAR04 08:00	18MAR04 07:59
00640	Insulate Rear Deck 1 (Ins.)	20	16MAR04 08:00	18MAR04 07:59
00650	Hook up Wires & Tubing, Front Deck 1 (Elect.)	20	18MAR04 08:00	20MAR04 07:59
00660	Hook up Wires & Tubing, Rear Deck 1 (Elect.)	20	18MAR04 08:00	20MAR04 07:59
00670	Remove Old Burners from Boiler Front	100	16MAR04 08:00	26MAR04 07:59
00680	Remove Old Burners from Boiler Rear	100	16MAR04 08:00	26MAR04 07:59
00690	Remove Decking from Boiler Front	70	18MAR04 08:00	25MAR04 07:59
00700	Remove Decking from Boiler Rear	70	18MAR04 08:00	25MAR04 07:59
00710	Mechanical Check of Dampers	30	16MAR04 13:00	19MAR04 12:59
00720	Electrical Check of Scanners/Ignitors/Etc. (Elec	30	16MAR04 13:00	19MAR04 12:59
00730	Remove all Rigging	40	19MAR04 13:00	23MAR04 12:59

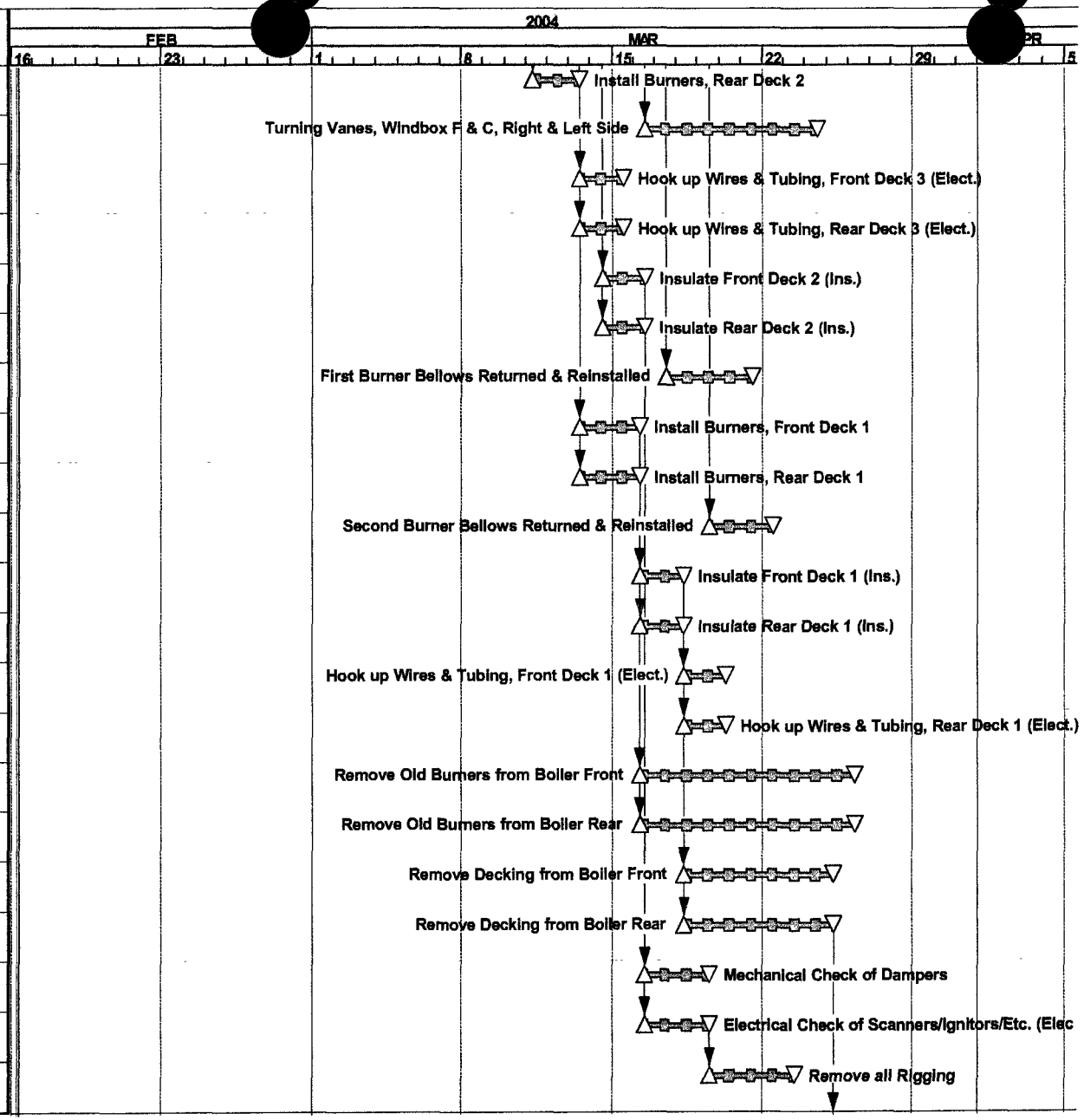

Start Date	16FEB04 07:00
Finish Date	26MAR04 15:59
Data Date	16FEB04 07:00
Run Date	20AUG03 10:52

Early Bar
Progress Bar

© Primavera Systems, Inc.

1912

Sheet 4 of 5

Intermountain Power - Delta, Utah

Lo-NOx Burner Replacement

Date	Revision	Checked	Approved

IP7_032508

4

SUBCONTRACTORS

Drexal Power - Electrical

Petro-Chem – Insulation

5

Maintenance Enterprises, Inc

a Crown Enterprises Company

TIME & MATERIAL RATE SCHEDULE

Intermountain Power – Delta, UT
August 20, 2003

	ST	OT
Project Manager	60.41	82.31
Superintendent	48.60	65.90
Planner/Scheduler	55.42	75.60
Cost Engineer	38.27	54.04
Quality Control	40.66	55.08
Supervisor/General Foreman	41.11	54.48
Safety	40.66	55.08
Timekeeper	22.64	31.28
Working Foreman	39.11	52.48
Material Control	31.49	43.60
"AA" Welder	37.11	50.48
"A" Welder	34.01	46.22
"B" Welder	29.37	39.84
"A" Pipe Fitter	32.46	44.10
"B" Pipe Fitter	29.37	39.84
"A" Boilermaker	30.92	41.97
"B" Boilermaker	27.82	37.71
"A" Rigger	30.92	41.97
"B" Rigger	27.82	37.71
Helper	23.17	31.32
Fire watch/Hole Watch	18.53	24.93
Labor	18.53	24.93

NOTE: The Above Rates Are Valid For (Six) 6 Months.

Overtime/Holiday Pay:

- All hours worked over eight (8) hours each day are considered overtime.
- All hours worked on Saturday, Sunday or holidays are considered overtime.
- Contractor's normal workweek is a sixty (60) hour week [six (6) ten (10) hour shifts]...However, Contractor is receptive to any work day/work week required for a specific job, based upon prior mutual agreement.
- When a twelve (12) hour shift is requested by client, Contractor shall be paid for crew mealtime (i.e., receive twelve (12) hours pay for eleven and one-half (11-1/2) hours worked).

Standby Time:

- If the crew is not able to work as scheduled during any shift or is delayed for any reason beyond their control, a minimum of four (4) hours up to a maximum of ten (10) hours per day will be charged in accordance with the above rates to a maximum of sixty (60) hours per week.

Travel Time:

- Travel time required to move tools and equipment from point of origin to jobsite and return.
- Travel time by air or ground transport when approved in advance by the client. Travel time is automatically considered "COMPANY APPROVED" for any emergency call out of 72 hours or less notice and will apply to traveling both to and from the jobsite.
- Travel time is actual elapsed time from point of origin to jobsite and return to a maximum of eight (8) hours per day and will be charged at the above Straight Time rates.

Transportation:

- Vehicles for transportation to and from jobsite, charged at cost plus ten percent (10%), if required.
- Air travel versus use of ground transportation is subject to Client's prior concurrence.
- Ground transportation will be charged portal to portal at thirty two (32) cents per mile for employee owned vehicles.

Per Diem:

- At MEI's option, the rate will be $75.00 U.S. Dollars per day per person **OR** $20.00 U.S. Dollars per day per person plus, lodging will be charged at cost plus ten percent (10%). Per Diem will be charged Monday through Sunday regardless of the work schedule, unless prior agreements have been made to supercede this agreement. Per Diem will only be charged on employee's traveling over 50 miles from their legal residence.

M.E.I. Owned Equipment:

- Equipment rates include maintenance and costs associated with ownership and furnishing of such equipment.
- Weekly/Monthly rates are based on seven days around the clock operation.
- Fuel will be invoiced at cost plus ten percent (10%) if supplied by MEI.
- Pickup will be invoiced at $50.00 per day.

Personal Protective Equipment:

- Included in the labor rates will be: safety glasses, hardhats, monogoggles, ear protection and gloves.
- Any special safety equipment such as fresh air, etc. will be furnished at cost plus ten percent (10%).

Materials:

- All materials will be charged at cost plus ten percent (10%).

Consumables:

- All consumables will be charged at cost plus ten percent (10%).

Small Tools:

- Tool trailer will be charged at $35.00 per hour.
- See attached list for tools included with tool trailer. All other tools will be charged at cost plus ten percent (10%).

Subcontracts:

- Actual cost plus ten percent (10%).
- All fuel will be charged at cost plus ten percent (10%).

Third Party Equipment Rental:

- Actual cost plus ten percent (10%).

Freight:

- Freight for tool trailers, equipment, and any materials will be charged cost plus ten percent (10%) (Round trip).

Welding Procedures:

- All specialized procedures not currently in MEI's database will be charged at cost plus ten percent (10%).

Welder Testing:

- All welders having to be qualified to the new procedures will be charged at cost plus ten percent (10%), test time at above straight time rates, and mileage at $.32 per mile.

6

THE NATIONAL BOARD
OF
BOILER & PRESSURE VESSEL INSPECTORS

Certificate of Authorization

This is to certify that

MAINTENANCE ENTERPRISES, INC.
52410 CLARK ROAD
WHITE CASTLE, LOUISIANA 70788

is authorized to use the "R" SYMBOL in accordance with the provisions of the National Board.

The scope of Authorization is limited as follows:

REPAIRS AND/OR ALTERATIONS AT THE ABOVE LOCATION AND EXTENDED FOR FIELD REPAIRS AND/OR ALTERATIONS CONTROLLED BY THIS LOCATION

CERTIFICATE NUMBER: **R-845**

ISSUE DATE: **MAY 30, 2002**

EXPIRATION DATE: **SEPTEMBER 20, 2005**

Executive Director

NB 243 Rev. 2

IP7_032517

CERTIFICATE OF AUTHORIZATION

This certificate accredits the named company as authorized to use the indicated symbol of the American Society of Mechanical Engineers (ASME) for the scope of activity shown below in accordance with the applicable rules of the ASME Boiler and Pressure Vessel Code. The use of the Code symbol and the authority granted by this Certificate of Authorization are subject to the provisions of the agreement set forth in the application. Any construction stamped with this symbol shall have been built strictly in accordance with the provisions of the ASME Boiler and Pressure Vessel Code.

COMPANY:

MAINTENANCE ENTERPRISES, INC.
52410 CLARK ROAD
WHITE CASTLE, LOUISIANA 70788

SCOPE:

MANUFACTURE AND ASSEMBLY OF POWER BOILERS AT THE ABOVE LOCATION AND FIELD SITES CONTROLLED BY THE ABOVE LOCATION

AUTHORIZED: **JUNE 4, 2002**

EXPIRES: **JULY 27, 2005**

CERTIFICATE NUMBER: **29,190**

CHAIRMAN OF THE BOILER
AND PRESSURE VESSEL COMMITTEE

DIRECTOR, ACCREDITATION AND CERTIFICATION

The American Society of Mechanical Engineers

IP7_032518

CERTIFICATE OF AUTHORIZATION

This certificate accredits the named company as authorized to use the indicated symbol of the American Society of Mechanical Engineers (ASME) for the scope of activity shown below in accordance with the applicable rules of the ASME Boiler and Pressure Vessel Code. The use of the Code symbol and the authority granted by this Certificate of Authorization are subject to the provisions of the agreement set forth in the application. Any construction stamped with this symbol shall have been built strictly in accordance with the provisions of the ASME Boiler and Pressure Vessel Code.

COMPANY:

MAINTENANCE ENTERPRISES, INC.
52410 CLARK ROAD
WHITE CASTLE, LOUISIANA 70788

SCOPE:

MANUFACTURE OF PRESSURE VESSELS AT THE ABOVE LOCATION AND FIELD SITES CONTROLLED BY THE ABOVE LOCATION

AUTHORIZED: **JUNE 4, 2002**

EXPIRES: **JULY 27, 2005**

CERTIFICATE NUMBER: **31,222**

CHAIRMAN OF THE BOILER
AND PRESSURE VESSEL COMMITTEE

DIRECTOR, ACCREDITATION AND CERTIFICATION

The American Society of Mechanical Engineers

IP7_032519

7

EXCEPTIONS

Part B – Division B2 – Paragraph 2 – Incentives and Liquidation Damages

Early Completion:

For completion of installation of the burner and scanner systems, contractor will be awarded $25,000 per day for up to two (2) days, with a maximum possible bonus of $50,000.

Late Completion:

Liquidation damages for failure to complete insulation of all burner and scanner system components will be assessed at$100,000 per day, up to a possible total of ten (10) days delay of $1,00,000.

We feel this section should be removed or realigned equally.

8

CLARIFICATIONS

1. Job bid on standard rates, not prevailing wages
2. No ACM or lead paint
3. No federal, state or city taxes
4. Payment is net 30 days, billed once per month
5. Bond based upon 50% of insulation cost
6. Job bid on seven (7) days per week, ten (10) hours per day for six (6) weeks
7. Use of air pre-heaters electric hoist
8. No materials included. ABT to supply
9. No P-3 Planner included however, our office will up-date the schedule weekly if necessary
10. One (1) hour orientation included
11. No start-up support in bid
12. One (1) full-time safety man on site
13. One (1) full-time QC on site
14. No R-1 Form
15. No A-I
16. Bid bond by ABT

PART D - DIVISION D1

CONTRACT DOCUMENTS DESCRIPTION

The Contract Agreement, together with the documents listed in Article 3 thereof, the Reference Specifications, any other documents listed below, and such of Contractor's Proposal documents as are expressly agreed to by IPSC shall constitute the Contract (the Contract). Said Documents are complementary and require complete and finished Work. Anything shown or required of Contractor in any one or more of said documents shall be as binding as if contained in all of said documents. Contractor shall not be allowed to take advantage of any error, discrepancy, omission, or ambiguity in any document, but shall immediately report to the President and Chief Operations Officer, in writing, any such matter discovered. The President and Chief Operations Officer will then decide or correct the same and the decision will be final.

PART E - DIVISION E1

GENERAL CONDITIONS

1. Definitions: The following words shall have the following meanings:

   a. Bidder: The person, firm, or corporation adopting and submitting a Proposal under these Specifications.

   b. Buyer: The Purchasing Agent for IPSC.

   c. Contract Administrator: The IPSC employee designated by the President and Chief Operations Officer with primary responsibility for administration of the Contract, or other representatives designated by the Contract Administrator acting within the limits of their authority.

   d. Contractor: The person, firm, or corporation to whom the Contract is awarded.

   e. Directed, Required, Approved, etc.: The words *directed, required, approved, permitted, ordered, designated, prescribed, instructed, acceptable, accepted, satisfactory,* or similar words shall refer to actions, expressions, and prerogatives of the Contract Administrator unless otherwise expressly stated.

   f. Gallon: Liquid volume of 231 cubic inches at 60 degrees Fahrenheit.

   g. IGS: Intermountain Generating Station located at 850 West Brush Wellman Road, Delta, Utah 84624.

   h. IPA: Intermountain Power Agency, the owner of Intermountain Power Project, and a political subdivision of the state of Utah, organized and existing under the Interlocal Co-operation Act, Title 11, Chapter 13, Utah Code Annotated 1953, as amended.

   i. IPP: Intermountain Power Project, consisting of Intermountain Generating Station, Intermountain Railcar, Intermountain Converter Station, Adelanto Converter Station, Intermountain AC Switchyard and associated transmission lines, microwave stations, and support facilities.

   j. IPSC: Intermountain Power Service Corporation, a nonprofit corporation, furnishing personnel to support the Operating Agent in the performance of operation and maintenance.

   k. Operating Agent, or LADWP: The City of Los Angeles Department of Water and Power which is responsible for operation and maintenance for IPP.

IP7_032525

l. President and Chief Operations Officer: The President and Chief Operations Officer of IPSC, or other representatives designated by the President and Chief Operations Officer acting within the limits of their authority.

m. Reference Specifications: Those bulletins, standards, rules, methods of analysis or tests, codes, and specifications of other agencies, engineering societies, or industrial associations referred to in these Specifications. These refer to the latest edition, including amendments published and in effect at the date of the Invitation for Proposal, unless specifically referred to by edition, volume, or date. Unless the context otherwise requires, Reference Specifications also include all amendments published or adopted after the date of the Invitation for Proposal.

n. Subcontractor: A person, firm, or corporation, other than Contractor and employees thereof, who supplies labor, services or materials for a portion of the Work to be performed by Contractor under the Contract.

o. Ton: The short ton of 2,000 pounds.

p. Work: The services, materials, equipment, and other performance identified in these Specifications and other Contract Documents to be provided by Contractor.

2. Materials and Work: All Work shall comply with these Specifications. All materials used or supplied, and all equipment furnished, shall be new and unused, but this requirement shall not preclude the use of recycled materials in the manufacturing processes. All Work shall be done by qualified workers in a thorough and workmanlike manner that would pass without objection in both Contractor's trade and IPA's and IPSC's industry. Materials, equipment, workmanship, and other Work not definitely specified, but incidental to and necessary for the Work, shall conform to the best commercial practice for the type of Work in question and be of a quality that passes without objection in Contractor's trade and IPA's and IPSC's industry.

3. Nondiscrimination: The applicable provisions of Executive Order No. 11246 of September 24, 1965, and Bureau of Land Management regulations, and all other applicable governmental regulations pertaining to nondiscrimination in employment in the performance of contracts, are incorporated herein by reference, and made a part hereof as if they were fully set forth herein. During the performance of the Contract, Contractor shall not discriminate in its employment practices against any employee or applicant for employment because of the employee's or applicant's race, religion, national origin, ancestry, sex, age, or physical disability. All subcontracts awarded under or pursuant to the Contract shall contain a like nondiscrimination provision.

4. Governing Law; Venue: The Contract shall be governed by the substantive laws of the state of Utah, regardless of any rules on conflicts of laws or choice of law that would otherwise cause a court to apply the laws of any other state or jurisdiction. Any action,

in law or in equity, concerning any alleged breach of or interpretation of the Contract, or concerning any tort in relation to the Contract or incidental to performance under the Contract, shall be filed only in the state or federal courts located in the state of Utah.

5. Patents and Intellectual Property: Contractor shall fully indemnify and, at the election of IPA, defend IPA, IPSC, and the Operating Agent against any and all liability, whatsoever, by reason of any alleged infringement of any intellectual property rights (including, but not limited to, patents, copyrights, trademarks, or trade secrets) on any article, process, method, or application used in any designs, plans, drawings, or specifications provided under the Contract, or by reason of Contractor's manner of performance under the Contract, or by reason of use by IPA, IPSC, or the Operating Agent of any article, process, or material specified by Contractor.

   All drawings shall be delivered to and be the property of IPSC. IPSC shall be entitled to use the Drawings and the information contained therein for the construction, operation, maintenance, repair, alteration, improvement, and expansion of IPP facilities. Drawings anticipated for delivery to IPSC include: (a) General Arrangement Drawings showing equipment arrangement; (b) Field Installation Drawings; and (c) Instruction Manuals for supplied equipment.

6. Contractor's Address and Legal Service: The address given in the Proposal shall be considered the legal address of Contractor and shall be changed only by advance written notice to IPSC. Contractor shall supply an address to which certified mail can be delivered. The delivery of any written communication to Contractor personally, or delivery to such address, or the depositing in the United States Mail, registered or certified with postage prepaid addressed to Contractor at such address, shall constitute a legal service thereof.

7. Assignment of Contract Prohibited: Contractor shall not assign or otherwise attempt to dispose of the Contract, or any rights hereunder, or of any monies due or to become due hereunder, unless authorized by the prior written consent of the President and Chief Operations Officer. The Contract, and Contractor's rights hereunder (including rights of collection) are nonassignable without the President and Chief Operations Officer's prior written consent. No right or claim can be asserted against IPA, IPSC, or the Operating Agent, in law or equity, by any person, by reason of any assignment or disposition unless so authorized.

   If Contractor, without such prior written consent, purports to assign or dispose of the Contract, or any right or interest hereunder, IPSC may at its option terminate the Contract. Such termination shall relieve and discharge IPA, IPSC, and the Operating Agent from any and all liability, duties, and obligations to Contractor, and to any assignee or transferee thereof.

8. Quality Assurance: IPSC has the right to subject any or all materials, services, equipment, or other Work furnished and delivered under the Contract to rigorous

inspection and testing. (Unless otherwise specifically provided in the Contract with respect to specific materials, services, equipment, or other Work, IPSC has no duty to inspect, test, or specifically accept.) Before offering any material, services, equipment, or other Work for inspection, testing, delivery, or acceptance, Contractor shall eliminate all items or portions which are defective or do not meet the requirements of these Specifications. If any items or portions are found not to meet the requirements of these Specifications, the lot, or any faulty portion thereof, may be rejected. Only the Contract Administrator may accept any material, service, equipment, or other Work as complying with these Specifications on behalf of IPSC.

IPSC may inspect and reject materials, services, equipment, or other Work tendered or purchased under the Contract at any reasonable location IPSC may choose (including, but not limited to, points of origin, while in transit to IPSC, IPSC specified receiving points, IPSC storage sites, or any point of use or installation). Inspection can include any testing that IPSC deems necessary or convenient to determine compliance with these Specifications. The expense of any initial tests will be borne by IPSC. All expenses of subsequent or additional tests will be charged against Contractor when due to failure of first-offered materials, services, equipment, or other Work to comply with these Specifications.

The fact that the materials, services, equipment, or other Work have or have not been inspected, tested, or accepted by IPSC, whether voluntarily or as required by any specific provision in the Contract, shall not relieve Contractor of responsibility in case of later discovery of nonconformity, flaws, or defects, whether patent or latent.

9. Extra Work, Reduced Work, and Change Orders by IPSC: IPSC reserves the right at any time before final acceptance of the entire Work to order Contractor to furnish or perform extra Work, or to make changes altering, adding to, or deducting from the Work, without invalidating the Contract. Changes shall not be binding upon either IPSC or Contractor unless made in writing in accordance with this Article.

Changes will originate with the President and Chief Operations Officer who will transmit to Contractor a written request for a Proposal covering the requested change, setting forth the changed Work in detail, and including any required supplemental plans or specifications. Upon receipt of such request, Contractor shall promptly submit in writing to the President and Chief Operations Officer a Proposal offering to perform such change, a request for any required extension of time caused by such change, and an itemized statement of the cost or credit for the proposed change. Failure of Contractor to include a request for extension of time in the Proposal shall constitute conclusive evidence that such extra Work or revisions will entail no delay and that no extension of time will be required.

If Contractor's Proposal is accepted by IPSC, a written change order will be issued by the President and Chief Operations Officer stating that the extra Work or change is authorized and granting any required adjustments of the Contract price and of time of

completion. If Contractor's Proposal is rejected by IPSC, then IPSC may order the additional or changed Work from other vendors.

Additional Work or changes pursuant to the change order shall be performed in accordance with the terms and conditions of these Specifications. No extra Work shall be performed or change made unless pursuant to such written change order, and no claim for an addition to the Contract price shall be valid unless so ordered.

Notwithstanding anything in the preceding paragraphs to this Article, IPSC may issue a written order reducing the Scope of Work without issuing a request for Proposal. Any such reduction in the Scope of Work shall be effective upon issuance. Reductions ordered by IPSC shall constitute partial terminations and shall reduce the price to be paid.

10. Changes at Request of Contractor: Changes may be made to facilitate the Work of Contractor. Such changes may only be made without additional cost to IPSC, without extension of time, and pursuant to written permission from the President and Chief Operations Officer. Permission for such changes shall be requested in writing by Contractor to the President and Chief Operations Officer.

11. Time is of the Essence and Extensions of Time: Time is of the essence to the Contract. Delivery and other performance of Work must be completed within the times and by the dates specified. Time for delivery or other performance of Work shall not be extended except as provided in this Article. Failure to deliver or otherwise perform Work within the times and by the dates specified shall constitute a default and be grounds for IPSC to immediately terminate the Contract.

If Contractor makes a timely written request in accordance with this Article, the time for delivery or other performance of Work will be extended by a period of time equivalent to any delay in the whole Work which is: (a) authorized in writing by the President and Chief Operations Officer, (b) caused solely by IPSC, or (c) due to unforeseeable causes (such as war, strikes, or natural disasters) and which delay is beyond the control and without the fault or negligence of Contractor and subcontractors.

Contractor shall promptly notify the President and Chief Operations Officer in writing at both the beginning and ending of any delay, of its cause, its effect on the whole Work, and the extension of time claimed. Failure of Contractor to provide such written notices and to show such facts shall constitute conclusive evidence that no excusable delay has occurred and that no extension of time is required.

The President and Chief Operations Officer will ascertain the facts and the extent of the delay and will extend the time for delivery when the findings of fact justify such an extension. The President and Chief Operations Officer's determination will be final and conclusive.

IPSC will be responsible for granting extensions of time as herein provided, but will not otherwise be responsible in any manner or liable to any extent for damage directly or indirectly suffered by Contractor as a result of any delay.

12. Protests and Claims: If Contractor considers any demand of the President and Chief Operations Officer to be outside of the requirements of the Contract, or considers any amount of payment, or any record, ruling, or other act, omission, or determination by the President and Chief Operations Officer to be unreasonable, Contractor shall promptly deliver to the President and Chief Operations Officer a written statement of the protest and of the amount of compensation or nature of accommodation, if any, claimed.

    Upon written request by the President and Chief Operations Officer, Contractor shall provide access to all records containing any evidence relating to the protest or claim.

    Upon review of the protest, claim, and evidence, the President and Chief Operations Officer will promptly advise Contractor in writing of the final decision which will be binding on all parties.

    The requirements of this Article shall be in addition to, and shall not be construed as waiving claims provisions of the Statutes of the state of Utah. Contractor is deemed to have waived and does waive all claims for extensions of time and for compensation in addition to the Contract price except for protests and claims made and determined in accordance with this Article.

13. Limitation of Liability; Responsible Party: It is understood and agreed that IPA shall be the sole party or person liable to Contractor for payments under or pursuant to the Contract, and for any breaches, defaults, or for any torts in the performance of or in relation to the Contract by IPA, IPSC, or the Operating Agent, or any officers, agents, or employees thereof. Contractor hereby expressly covenants and agrees that no suit shall be brought by Contractor against IPSC, or the Operating Agent, or their, or IPA's officers, agents, or employees, or any of the purchasers of power from IPA, but that all rights or remedies that Contractor may have or that may arise under or in relation to the Contract shall be asserted by Contractor solely against IPA. Without limiting the foregoing provisions of this Article, Contractor shall have no right against any of the foregoing (including IPA) to assert or recover, in contract or in tort, damages or losses in the nature of consequential damages, incidental damages, or punitive or exemplary damages. In no event shall Contractor be liable, whether in contract, tort (including negligence), warranty, strict liability, or any other legal theory, for any indirect or consequential damages, such as, but not limited to: cost of capital; loss of anticipated profits or revenue; loss of use or increased expense of using equipment or plant; loss of power or production; cost of purchased or replacement power or production; or claims of customers for loss of power or production.

14. Independent Contractor: Contractor shall perform all Work as an independent contractor in the pursuit of its independent calling. Contractor is not an employee,

agent, joint venturer, partner, or other representative of IPA, IPSC, or the Operating Agent and shall be under the control of IPSC only to provide the Work requested and not as to the means or manner by which the Work is to be accomplished. Contractor has no authority to act for, bind, or legally commit IPA, IPSC, or the Operating Agent in any way.

15. Drug Policy: Contractor shall submit a current copy of its drug policy for review. IPP facilities are a drug free and zero tolerance workplace. Contractor's employees and its subcontractors' employees, who are to perform Work or otherwise be at the IPP facilities, shall participate in a drug testing program prior to arrival, and at any additional time(s) during the Contract as IPSC may request.

16. Security and Safety Compliance: Contractor and its employees, agents, representatives, and/or subcontractors, while performing Work on IPP premises, or who are otherwise on IPP premises, shall fully comply with all security, fire prevention, and safety rules and procedures in force at IPP. IPSC has the right (but not duty) to make periodic and random inspections of the persons, and of their respective property, upon entering, at any time while on, and when departing any IPP facility. Such persons subject to inspection include Contractor, any subcontractor, and their respective employees, agents, and representatives. Property subject to inspection includes, but is not limited to, vehicles, clothing, toolboxes, lunch boxes, any other carrying case, tools or equipment, and anything contained therein. If violations are noted, the violations will be reported to Contractor's on-site supervisor and the Contract Administrator for appropriate action.

All Contractor's employees will be given security identification badges by IPSC and those badges shall be displayed each day to allow admittance on IPP premises. Contractor's employees who do not have security identification badges in their possession, will not be allowed on site unless signed in by the Contract Administrator. All security identification badges shall be returned to the Security Contractor when the employee terminates their work at this site. All Contractor's vehicles will also receive parking stickers from the Security Contractor allowing entrance on IPP premises. Temporary badges and parking stickers are available for intermittent Contractor employees and vehicles.

Contractor shall have access on IPP premises between the hours of 7:00 am to 7:00 pm Monday through Friday. Access may be allowed on weekends or at other times with the approval of the Contract Administrator.

Contractor will be directed to specified areas for parking vehicles and equipment by the Contract Administrator. Certain areas of IPP premises are restricted to IPSC vehicles only. Exceptions to the parking restriction will be made on an as needed basis through Contractor's respective Contract Administrator. Contractor shall make its employees, agents, representatives, and/or subcontractors aware of all areas that are subject to restricted parking.

Contractor agrees, warrants, and represents that: (a) it is familiar with the risks of injury associated with the Work and otherwise being on IPP premises, (b) has reviewed the Work to be performed, (c) has inspected the IPP Work site with an IPSC representative, and (d) has determined that no unusual or peculiar risk of harm exists with regard to the Work to be performed on IPP premises. Contractor further agrees that it shall, at all times, provide on IPP premises, a competent supervisor(s) familiar with IPSC's and the industry's safety standards to ensure compliance with all federal, state, and local regulations pertaining to safety (including, but not limited to, Federal and State OSHA, as said regulations relate to the Work to be performed under the Contract). Although IPSC assumes no responsibility to oversee or supervise the Work, IPSC reserves the right to review safety programs and practices and to make recommendations to Contractor. No such review or recommendation by IPSC shall impose any liability or responsibility on IPSC, or relieve Contractor from providing a safe working environment and complying with all legal requirements.

Contractor shall comply with IPSC's safety and equipment requirements prior to starting the Work. Worker protective clothing, which includes, but is not limited to, hardhats, safety glasses, safety shoes, gloves, respirators, earplugs, safety harnesses, and face shields shall be provided by Contractor.

Prior to starting the Work, all of Contractor's personnel shall attend a safety orientation taught by a representative of IPSC. At Contractor's option and subject to IPSC approval, a supervisor of Contractor may attend the orientation taught by IPSC, and then present the orientation to the remainder of Contractor's personnel. In that case, a roll shall be provided to IPSC which lists each person who received the orientation and the date it was received.

17. Nonexclusive: This is a nonexclusive Contract. IPSC reserves the right to obtain services, materials, equipment, or other Work from other vendors or suppliers.

PART E - DIVISION E2

ADDITIONAL GENERAL CONDITIONS

1. Guarantee: Contractor guarantees and warrants for a minimum period of one (1) year after delivery, and for such longer period as may be specified by the applicable statute of limitations, that all materials, services, equipment, and other Work furnished are free from defects and otherwise conform to the terms of the Contract, including, but not limited to, the Article entitled "Materials and Work" in Part E, Division E1, General Conditions.

   Contractor shall repair or replace, as IPSC may direct, all defective materials, services, equipment, or other Work. Such repair or replacement shall be F.O.B. at such destination as IPSC may direct (contract delivery point, point of installation, point of consumption, etc.). IPSC's right to demand repair or replacement is in addition to any other remedies that may be available for breach of the foregoing guarantee and warranty.

   Contractor shall, for the protection and benefit of IPA, IPSC, and LADWP, obtain guarantees conforming to the foregoing two (2) paragraphs from each of its vendors and subcontractors with respect to their materials, services, equipment, or other portion of the Work. Such guarantees from vendors and subcontractors shall be in addition to, and not in lieu of, Contractor's own guarantees.

2. Payment: Payment will be made within thirty (30) calendar days after delivery and receipt of the invoice in the form directed by IPSC.

3. Work Slips and Invoices: Contractor shall furnish Work slips suitable for recording (e.g., - the weight of concentrated sulfuric acid in tons), at the time of each delivery. IPSC may direct the form of Work slips to be used. Accuracy of completed Work slips shall be subject to verification by IPSC, who will retain the original copies.

   At the expiration of each calendar month during which material or other Work is delivered, Contractor shall render an invoice and copies of signed Work slips (e.g., - the total weight of acid) delivered during said month.

   Invoices shall be submitted in duplicate to Accounts Payable, Intermountain Power Service Corporation, 850 West Brush Wellman Road, Delta, Utah 84624-9546. All letters pertaining to invoices shall be addressed to the foregoing address.

   IPSC may direct the form of invoice to be used. All invoices shall show the Contract number, release number, or other identification of each delivery covered by the invoice. In all cases, the amount of the applicable sales tax or use tax shall be separately stated on the invoice.

4. Regulations, Permits, Licenses, and Warrants: Contractor shall comply with all applicable federal, state, and local regulations including, but not limited to, Federal and State OSHA, as said regulations relate to the Contract, Contractor's performance, or

Contractor's trade. In addition, Contractor shall ensure that all permits, licenses, and warrants relating to the Contract, Contractor's performance, and Contractor's trade be acquired.

5. Letters to IPSC: All inquiries relating to these Specifications prior to award of Contract shall be addressed to the Buyer.

After award of Contract, all letters pertaining to performance of the Contract (other than invoice) shall be addressed as follows:

Mr. George W. Cross
President and Chief Operations Officer
Intermountain Power Service Corporation
850 West Brush Wellman Road
Delta, UT 84624-9546

Attention: James Nelson
Contract Administrator

Regarding **Contract No: 04-45606**

PART F - DIVISION F1

DETAILED SPECIFICATIONS - SPECIAL CONDITIONS

1. General: Under the terms of the Contract, Contractor shall furnish and deliver **Unit 2 Low NOx Burners** ordered by IPSC beginning with date stated in the first introductory paragraph of the Contract Agreement (hereinafter called the Contractual Period).

2. Quantity: IPSC agrees to purchase **forty-eight (48) Low NOx Burners and Associated Flame Detection Systems** during the Contractual Period.

3. Delivery: Contractor shall make deliveries only upon receipt of releases issued by the Buyer or a duly authorized representative. IPSC reserves the right to specify in said releases the amounts and dates of deliveries at the locations described in the Proposal Schedule.

   Notwithstanding the above, IPSC agrees to accept early delivery of burners if ABT's shop is ready to ship. Burners will be stored indoors at the site and unloaded by IPSC.

4. Printed Documents: All printed documents, including drawings and instruction books, if applicable, shall be in the English language. All units of measurement shall be in the English foot-pound-second system.

5. Indemnity Clause: Contractor undertakes and agrees to indemnify, hold harmless, and at the option of the IPA, defend IPA, IPSC, LADWP, and any and all of their boards, officers, agents, representatives, employees, assigns, and successors in interest from and against any and all suits and causes of action, claims, charges, costs, damages, demands, expenses (including, but not limited to, reasonable attorneys' fees and cost of litigation), judgments, civil fines and penalties, liabilities or losses of any kind or nature, including, but not limited to, violations of regulatory law, breach of contract, death, bodily injury or personal injury to any person, including Contractor's employees and agents, or damage or destruction to any property of either party hereto, or of third persons, arising in any manner by reason of or incident to the performance of the Contract on the part of Contractor, or Contractor's officers, agents, employees, or subcontractors of any tier, except as may be caused by the sole negligence of IPA, IPSC, LADWP, or their boards, officers, agents, representatives, or employees.

6. Insurance Requirements: Prior to the start of the Work, but not later than thirty (30) calendar days after date of award of Contract, Contractor shall furnish IPSC evidence of coverage from insurers acceptable to IPSC and in a form acceptable to IPSC Insurance Analyst. Such insurance shall be maintained by Contractor and at Contractor's sole cost and expense.

   Such insurance shall not limit or qualify the liabilities and obligations of Contractor assumed under the Contract. IPA, IPSC, or LADWP shall not, by reason of any of their inclusion under these policies or otherwise, incur liability to the insurance carrier for payment of the premium for these policies.

Any insurance carried by IPA, IPSC, or LADWP which may be applicable is and shall be deemed excess insurance, and Contractor's insurance is and shall be primary for all purposes despite any provision in Contractor's policies to the contrary.

Should any portion of the required insurance be on a "Claims Made" policy, Contractor shall, prior to the policy expiration date following completion of the Work, provide evidence that the "Claims Made" policy has been renewed or replaced with the same limits and terms and conditions of the expiring policy at least for the Contract under which the Work was performed.

Note: General ABT Clarification on Insurance: Should ABT's current limits be unacceptable to IPSC and ABT must raise the insurance limits for the Contract, the difference in ABT's premiums would be added and billed to IPSC at cost.

a. Workers' Compensation/Employer's Liability: Workers' Compensation Insurance covering all of Contractor's employees in accordance with the laws of all states in which the Work is to be performed and including Employer's Liability Insurance, and as appropriate, Broad Form All States Endorsement. The limit for Employer's Liability coverage shall be not less than $1 million each accident and shall be a separate policy if not included with Workers' Compensation coverage. Evidence of such insurance shall be a certificate to the policy providing for a thirty (30) calendar days prior written notice of cancellation or nonrenewal of a continuous policy to IPSC, by receipted delivery.

b. Commercial General Liability: Commercial General Liability with Blanket Contractual Liability, Products and Completed Operations, Broad Form Property Damage, Premises and Operations, Independent Contractors, and Personal Injury coverages included. Such insurance shall provide coverage for total limits actually arranged by Contractor, but not less than $2 million Combined Single Limit. Should the policy have an aggregate limit, such aggregate limits should not be less than $8 million. Umbrella or Excess Liability coverages may be used to supplement primary coverages to meet the required limits. Evidence of such coverages shall be on IPSC's Additional Insured Endorsement Form, on an endorsement of the policy acceptable to IPSC, or a complete copy of the coverage and exclusions portions of the policy. The evidence of coverage should provide for the following:

(1) To include IPA, IPSC, LADWP, and their officers, agents, and employees as additional insured with the Named Insured for the activities and operations under and in connection with the Contract.

(2) That the insurance is primary and not contributing with any other insurance maintained by IPA, IPSC, or LADWP.

(3) That the policy shall not be subject to cancellation, change in coverage, reduction of limits or nonrenewal of a continuous policy, except after written notice to IPSC, by receipted delivery, no less than thirty (30) calendar days prior to the effective date thereof.

(4) A description of the coverages included under the policy.

c. Commercial Automobile Liability: Commercial Automobile Liability covering the use of owned, nonowned, hired, and leased vehicles for total limits actually arranged by Contractor, but not less than $1 million Combined Single Limit. Such insurance shall include Contractual Liability coverage. The method of providing evidence of insurance and requirements for additional insureds, primary insurance, notice of cancellation, and Severability-of-Interest shall be the same revised requirements in the Commercial General Liability Section of terms and conditions.

d. Professional Liability: Contractor shall provide Professional Liability Insurance covering Contractor's liability arising from errors and omissions made directly or indirectly during the execution and performance of the Contract and shall provide coverage of $2.5 million Combined Single Limit. Such insurance shall be an endorsement to the Commercial General Liability Policy without separate aggregate.

The policy shall not be subject to cancellation, change in coverage, reduction of limits, or nonrenewal of a continuous policy, except after written notice to IPSC, by receipted delivery, not less than thirty (30) calendar days prior to the effective date thereof.

e. Other Conditions: Contractor shall be responsible for all subcontractors' compliance with these revised insurance requirements. The foregoing remedies in subsection (1) shall be available to IPSC against Contractor for any failure by any subcontractor to maintain and provide the required insurance.

7. Transportation: All shipments of hazardous materials under the Contract or in connection herewith shall be handled in accordance with current U.S. Department of Transportation regulations and all other applicable federal, state, and local laws and regulations.

8. Material Safety Data Sheets: Contractor shall furnish IPSC with a Material Safety Data Sheet (MSDS) for all hazardous materials furnished under the Contract, used, stored, or transported on or near IPP premises in connection with the Contract. The MSDS shall be furnished to IPSC on, or prior to, the date of the first delivery, use, storage, or transportation of the materials or equipment. If these Specifications require that Contractor furnish instruction books, the MSDS shall also be included in such books.

9. Contract Termination:

a. For Convenience or Security: IPSC reserves the right, by giving twenty (20) calendar days prior written notice (or such longer notice as IPSC may select) to Contractor, to terminate the whole or any part of the Contract at IPSC's convenience, whether or not Contractor is in default. IPSC also reserves the right to terminate the Contract, effective immediately upon notice, for purposes of security or safety of IPP facilities, persons who work at IPP facilities, or the public. In the event of termination for convenience, security, or safety, IPA will pay Contractor reasonable and proper direct costs of termination (if, however, Contractor's Proposal includes cancellation charges, payment for termination costs shall not exceed the cancellation charges set forth therein). Contractor shall, after consultation with IPSC, take all reasonable steps to minimize the costs related to termination. Contractor shall provide IPSC with an accounting of costs claimed, including adequate supporting information and documentation and IPSC may, at its expense, audit the claimed costs and supporting information and documentation.

b. For Breach: IPSC may terminate the whole or any part of the Contract effective immediately upon notice, in the event Contractor is in material default, and without right on the part of Contractor to claim any termination costs. This right to terminate is in addition to, and not in lieu of, any other remedy provided in the Contract or otherwise provided by law or equity.

c. Limitation of Liability: In no event shall termination of this Contract, or any portion thereof, whether for convenience, security, safety, breach, or otherwise, constitute the basis for or result in any claim by Contractor for consequential or incidental damages (including loss of anticipated profits or other economic damages) or punitive damages, and Contractor hereby releases IPA, IPSC, and LADWP, and their officers, directors, employees, agents, and representatives, from any and all such claims or liability.

10. Suspension of Work: IPSC reserves the right to suspend and reinstate execution of the whole or any part of the Contract and the Work without invalidating the provisions of the Contract. In the event the Work is suspended, Contractor will be reimbursed for actual direct unavoidable costs that it reasonably incurs as a result of the suspension. Claims for such cost reimbursement shall be submitted by invoice. Contractor shall use all reasonable means to minimize such costs, and shall allow IPSC to audit costs claimed. Contractor shall, upon request by IPSC, provide a projection of costs it anticipates to incur during any suspension, or continuation of suspension, contemplated by IPSC. In no event shall suspension constitute the basis for, or result in, any claim for consequential or incidental damages (including loss of anticipated profits or other economic damages) or punitive damages, and Contractor hereby releases IPA, IPSC, and LADWP, and their officers, directors, employees, agents, and representatives, from any and all such claims or liability.

11. No Waiver: No breach, noncompliance, or other failure to perform (collectively "breach") by Contractor, or any subcontractor, or of any Work shall be deemed waived unless expressly waived in writing by the President and Chief Operations Officer. No waiver by IPSC of any one breach shall be deemed to waive any other prior, concurrent, or subsequent breach. No exercise, or failure to exercise, or delay in exercising any particular remedy by IPSC shall be deemed a waiver or preclude IPSC from subsequently invoking that remedy for that breach or any other breach. All remedies granted to IPSC in the Contract, or by law or equity, are cumulative and may be exercised in any combination or order.

PART F - DIVISION F2

DETAILED SPECIFICATIONS - DETAILED REQUIREMENTS

1. General: The Scope of Work for the Contract includes the design, procurement, fabrication, delivery, installation, and start-up of burners at IGS Unit 1 and Unit 2. The burners in Unit 2 are to be replaced during the Spring 2004 Outage. The outage is scheduled to begin February 28, 2004. All replacement burner materials must be on-site at IGS no later than February 13, 2004.

2. Existing Equipment: The existing burners are B&W Dual Register, Phase 5 Pulverized Coal Burners. The existing Bailey Control System Flamon® Type UM and UW flame scanning hardware shall be replaced with the new burners as a part of these Specifications. The existing lighters are B&W CFA Oil Ignitors normally burning No. 2 diesel oil. The CFA lighters will continue to be used with the new burners and scanning system. The burners, scanners, lighters and fuel specification sheets and outline drawings are included in Attachment 1, Scanner, Lighter and Fuel Specifications, and Outline Drawings.

   Existing combustion zone stoichiometry is approximately 1.15. Nominal windbox pressures run in the range of 1.0 to 1.5 in. w.g. Burner windboxes are compartmentalized and fed by one (1) damper at each end of the compartment, operating in parallel. The width of the boiler (i.e. length of a compartment) is approximately 80 feet.

   Note: See attached layouts of the existing windbox and burners. Pulverized coal is provided by one (1) of eight (8) MPS - 89G mils at a design rate of up to 68 tph at a fineness of 70 percent through 200 mesh.

3. Burner Scope: Contractor shall provide forty-eight (48) Low NOx Burners incorporating latest technology combustion design, including all associated hardware for installation, special tools, and technical direction during installation and startup. The burners shall operate compatibly and effectively with a newly installed overfire air system, which is to be capable of utilizing up to 20 percent of the total design combustion air flow.

4. Flame Detection System Scope: The bidder shall provide a complete offering for replacement of the existing Bailey Controls Flamon® Scanning System. Bids for both single and dual probe systems will be accepted and evaluated. Award will be based heavily upon evaluation of the experience list provided with each bid. Bidders may offer alternate bids for all flame scanning systems with which they have had experience.

   Flame scanner systems shall include all hardware required for complete installation of the system, including wiring, conduit, and associated hardware for cable routing. Wiring schematics, wiring and installation specifications, and junction boxes with pre-installed, termination hardware shall be supplied by Contractor.

5. Burner Design: Burners provided for use at IGS shall adhere to the following provisions:

   a. Within the design phase of the Work, Contractor shall review all operational impacts on associated equipment and systems such as fans, pulverizers, dampers, etc. Any concerns regarding operating limitations or increase power demands noted within the modeling/design phase shall immediately be brought to the attention of the IPSC Contract Administrator.

   b. Burner design and fabrication methodologies shall emphasize speed and ease of installation. The burner nozzles shall interface directly with the existing burner line flanges.

   c. Burners shall be provided with combustion air flow sensors providing individual burner air flow indication in each annulus on each burner. Pre-wired panels, signal transducers, and displays shall be provided for displaying flow for each burner locally. Terminals shall be designed and provided within each panel for routing signals remotely. IPSC will have the responsibility to route the flow signals from the local panels to the control room if desired.

   d. Burners shall provide for local manual air balance control, both between registers within each burner and between burners within a row. The registers shall remain operable under all operating conditions for at least the durations noted in Division C2, Burner and Scanner Performance Guarantees.

   e. Temperature sensors installed at two (2) locations on each burner shall be provided and routed to a local cold-junction box at each burner level. The sensors shall be located in accordance with the direction of Contractor to identify and track the hottest temperatures occurring at the burner in both the in-service and out-of-service condition. Individual burner temperatures shall be provided at the local cold-junction boxes. Termination space shall be provided within the local cold-junction boxes for continuation of the circuits remotely for indication, monitoring, and alarm within the plant data acquisition system by IPSC as desired.

   f. The burner assemblies shall be fabricated of quality material sufficient to withstand the significant thermal stresses occurring within the windbox as a result of both radiant and convective heating. Any deformation causing malfunction of register assemblies or misdirection of flow through the burner within the period of guaranteed operability shall be repaired at the earliest possible opportunity and charged to Contractor.

g. Experience-based and verified wear-life shall be quoted within the bid for all burner components. No component shall last less than four (4) years before requiring rebuild, restoration, or replacement.

h. Burners shall be designed to operate continuously by IPSC without detrimental effects on boiler performance and steam side flexibility, within the ranges of carbon monoxide, unburned carbon, nitrogen oxides, and excess air specified in Division C2, Burner and Scanner Performance Guarantees.

i. Burners shall be designed for installation within the existing burner openings without pressure part modifications, unless clearly noted otherwise within the Proposal.

j. Burners shall be designed such that stable flame ignition occurs at the nozzle discharge.

k. Burners shall be designed for continuous operation with preheated air at an air heater outlet temperature of 750°F. This does not account for radiant and other heating sources.

l. Burners shall be equipped with an aspirated observation/viewing port to permit inspection of the flame. If necessary for flame diagnostics and adjustment, multiple observation doors shall be furnished. Doors shall be designed to permit observation during any load condition. Contractor (ABT) shall include one (1) port per burner assembly with observation glass to view flame. Each port will be equipped with purge air connection and ball valve should the need arise to purge the view pipe.

m. Burners shall include, and shall be provided with, new seal/cooling air piping and fittings, including a ball valve, from the burner connection to the header piping.

n. Air register operating mechanisms, joints, seals, slides, and linkages shall not be subject to binding from poor design, differential expansion, or from the accumulation of fly ash and shall remain operational without internal lubrication.

o. Air flow volume adjustment within each zone of the burner shall not be controlled with the same device controlling air swirl or spin within any air zone.

p. Burners shall be capable of stable operation continuously from 45 percent to 115 percent of rated BTU output of the burner without supplemental fuels.

6. Flame Detection System Design: The flame scanning system shall, as a minimum, include the following provisions:

a. Flame scanner ports shall be sighted so flame scanner can readily and effectively discriminate between adjacent or opposing burners and its own burner flame in all operating modes and at all loads.

b. Flame detection system shall be provided with protective devices permitting the removal of the system from service with the boiler in operation.

c. Flame scanner ports shall include scanner cooling air and seal air provisions, where required. If not provided, or if shown to be adequate in operation, Contractor shall provide and install such hardware as required to address both heating and reliability issues.

d. Flame detection system shall be designed with IGS existing support systems in mind. Requirements for reliable operation of the scanning system (cooling air, power, etc.), shall be clearly identified within the bidding documents.

e. Flame detection system electronics shall be designed for operation in severe industrial environments. Contamination from dust, flyash, and ambient temperatures in excess of 120°F occur on a regular basis throughout the boiler structure.

f. Flame detection system and controllers shall be capable of communication in all versions of Modbus RTU communications protocol.

g. Flame detection system shall provide local indication of flame detected at each burner level. Control outputs to the burner management system shall be dry contacts.

7. Technical Support: Contractor shall consult with IPSC throughout the design development process, allowing IPSC to participate in the selection process of preferential items or common industrial equipment required within the design. Bidders shall include the names and direct dial telephone numbers of the lead project design engineers in each area of expertise in the bidding documents. Where possible and applicable, the name and telephone number of the assigned site construction coordinator shall also be provided. All technical advisory personnel assigned to support IPSC with this Project shall have a minimum of ten (10) years experience in the issues to be addressed.

During construction and startup, Contractor shall provide full-service technical support throughout the outage in all areas of expertise required for successful installation, startup, and tuning of the boiler. This shall occur regardless of whether Contractor is also selected to install the burner and flame detection systems. This shall include technical support in proper positioning, tuning, operation, and control of the burner registers, flame detection system, and affected boiler equipment.

Bidders shall include a minimum of two (2) weeks of support following startup to ensure stable operation of both the burner and flame detection systems. In addition, bidders shall include at least one (1) additional week (including travel, room, and boarding expenses) at IPP job site for two (2) people to witness and participate in the full-load operational testing. Should extended problems arise as a direct result of the Contract modifications, Contractor shall provide whatever level of support is required to address the problems, in a timely manner.

8. Installation: A primary focus of the Contract shall be the optimization of the Work to occur during unit off-line hours. Detailed planning of the Scope of Work for the Contract shall include a level of redundancy in equipment and manpower to ensure that guaranteed schedules are met.

   a. Bidders may submit proposals for installation of the burners and scanner systems as capabilities dictate. Where bidder elects to provide an installation bid, all equipment and materials of installation shall be provided by bidder. Where bidder elects not to bid the installation of these systems all equipment and materials of installation shall be provided by Contractor with the exception of wiring, conduit, and associated hardware for cable routing. Wiring schematics, wiring and installation specifications, burner flow instrumentation, local display/junction boxes, burner temperature display, and cold-junction boxes shall be supplied by Contractor with pre-installed termination hardware as defined in Division F2, Article 5, Burner Design.

   b. Contractor shall be responsible for any modifications and/or damage to or around the burner openings or windbox associated with the Work. This includes, but is not limited to, refractory, seal plates, and waterwall tubing.

   c. Contractor shall be responsible for design and installation of any modifications required for interface with the existing coal pipes. This includes modifications to routing, size, and connection to the new burners.

   d. Contractor shall be responsible for design and installation of any additions or modifications to windboxes, windbox supports, burner supports, waterwall tubing, buckstay system, etc., or any other existing system or piece of equipment required for proper and successful operation of the new burners and/or flame detection systems.

   e. Contractor shall be responsible for connecting new equipment to IPSC existing facilities, to include furnishing and installing connections to plant seal air or plant instrument air (including instrument shutoff valves for each device) where required.

f. Contractor shall be responsible to maintain Work areas in an organized and safe manner throughout the execution of the installation plan. IPSC shall retain the right to assess and require correction of any areas or situations it deems as impacting ongoing operations and maintenance. Waste material produced during a shift shall be disposed of by the end of the following shift.

At the conclusion of each outage, Contractor shall ensure that all Work areas associated with the Contract are restored, replaced, and/or cleaned in a manner similar in appearance to that found prior to the outage.

g. Contractor shall provide and install replacement insulation anchors, insulation, lagging, and all other materials required for complete restoration of any and all boiler external surface removed or disturbed during or resulting from Contract Work. Contractor shall replace or install insulating materials of a quality meeting or exceeding the insulation system currently in use on the respective boiler and system components.

ATTACHMENT 1

SCANNER, LIGHTER AND FUEL SPECIFICATIONS, AND OUTLINE DRAWINGS

5R91-IV-7A3

Feb 84

Operating Instructions

for

CFA OIL LIGHTER

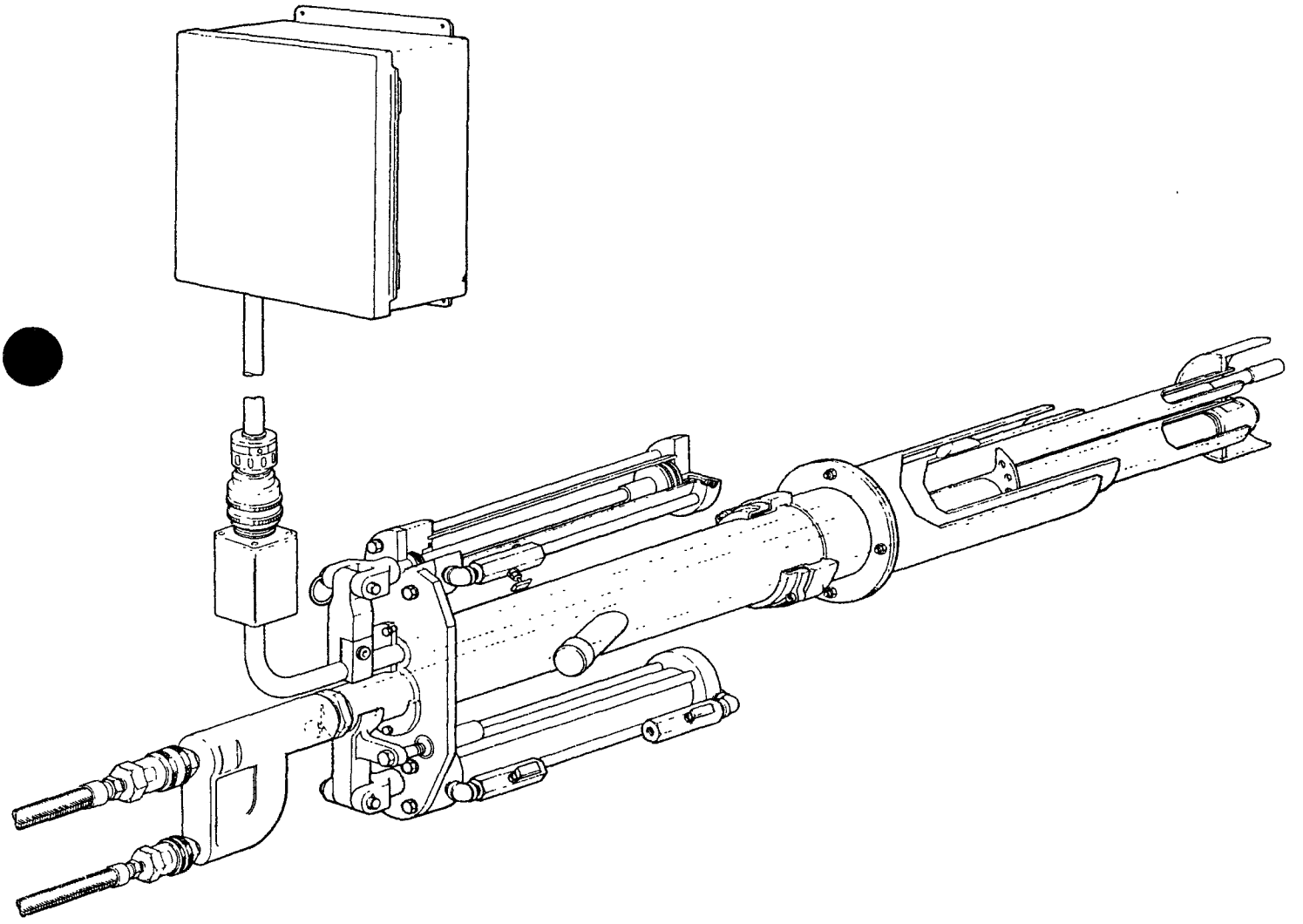

Babcock & Wilcox

a McDermott company

IP7_032547

TABLE OF CONTENTS

SCOPE 3
DESCRIPTION AND PURPOSE 3
FUEL OIL 4
LIGHTER CAPACITY 4
ATOMIZING REQUIREMENTS 4
HIGH ENERGY IGNITOR 4
AIR CYLINDER DRIVES 4
SEAL AIR 5
PURGE AIR 5
ADJUSTMENTS 5
OPERATION 6
MAINTENANCE 6

IP7_032548

SCOPE

These instructions deal with the care and operation of the CFA Oil Lighter. Separate instructions cover the lighter control, main burner, and related equipment.

DESCRIPTION AND PURPOSE

The CFA Lighter is a complete shop assembly consisting of a mounting sleeve, oil atomizer, high energy spark ignitor (HEI), and air cylinder drives for inserting and retracting the lighter components.

To achieve optimal atomization of the fuel, the lighter employs a steam or air assisted oil atomizer. The ignition source for the lighter fuel is provided by a high energy spark ignitor. Separate air cylinder drives are provided for positioning the lighter and high energy ignitor probe. The atomizer is inserted for firing and retracted when the lighter is out of service. Similarly, the ignitor probe is inserted to ignite the lighter fuel and retracted at the completion of the trial for ignition period. The ignitor probe is also inserted and energized when the atomizer is purged following normal lighter shutdown. Lighter insertion is proven by three-way air valves on each lighter which are connected in series to the control. Drawings of the lighter assembly and oil atomizer are at the rear of this instruction.

The CFA Lighter is designed primarily for lighting the main burner and stabilizing ignition of the main burner. The high input capability and the independently retractable ignitor probe feature also make it possible to utilize the lighter for boiler warmup. However, combustion effeciency and stack emissions are closely dependent upon the secondary air temperature. Normally, a minimum secondary air temperature of 70 °F is required to ensure lighter flame stability. If the lighters are to be operated for extended periods for boiler warmup, steam or water coil air heaters should be used to raise secondary air temperature to a minimum of 150 °F. In addition, lighter input should be limited to a maximum of 15 MKB per hour. This will provide acceptable combustion efficiency and stack appearance during the warmup period. Operation at higher capacities may proceed at an air temperature of approximately 250 °F.

Performance of the lighter is highly dependent upon proper operation of the oil atomizer. Pluggage of the atomizer sprayer plate will result in poor atomization and/or poor distribution of the oil spray. Incomplete combustion and a distinct possibility of raw oil carry-over can result from operation under these conditions. Sprayer plate pluggage can be particularly troublesome during initial operation when mill scale and other foreign material left in the oil and atomizing medium piping can collect and plug the sprayer plate ports. Since lighters are often operated for extended periods during initial start-up while boiling-out and blowing steam lines, frequent inspection and cleaning of the atomizers is especially important during this period. However, routine inspection and cleaning should continue during subsequent operation.

Caution - If the sprayer plate should become plugged during operation, oil and atomizing medium under pressure may be trapped in the atomizer. When this condition exists, uncoupling of the atomizer will result in oil and atomizing medium spray from the atomizer body. Extreme care should be taken to avoid personal injury whenever the atomizer is uncoupled.

The B&W Type LC Lighter Control System is normally provided with the CFA Lighter. The control package performs all lighter functions: including lighter and high energy ignitor insertion and retraction, fuel, atomizing medium, and purging control automatically and in the proper sequence. Separate instructions are provided for the operation and maintenance of the Lighter Control System.

IP7_032549

FUEL OIL

The CFA Lighter can be fired using No. 2 or No. 6 fuel oil as specified in ASTMD-396-73. Maximum allowable oil viscosity at the lighter atomizer is 135 ssu. No. 6 fuel oil will, therefore, require preheating. The oil temperature required at the lighter depends on the temperature - viscosity characteristics of the particular oil being fired. Normally, oil temperature in the range of 180°- 225° is required to maintain No. 6 oil at the above viscosity.

To help prevent sprayer plate oil port pluggage, B&W supplied lighter control packages designed for No. 2 oil service are equipped with 100 mesh oil filters. These filters serve a dual purpose of protecting the valves contained in the control package while also eliminating foreign material which could result in sprayer plate pluggage. Piping systems designed for service with No. 6 oil where individual shut-off valves are supplied for each lighter, should include a 32 mesh filter in the oil supply line upstream of the oil shut-off valves.

To prevent rapid pluggage of these filters and to protect upstream equipment, duplex strainers should be installed in the fuel oil pump suction and discharge piping. It is generally recommended that strainers in the suction line have a mesh no coarser than 1/16" and those on pump discharge be no coarser than 1/32".

LIGHTER CAPACITY

The lighter capacity can be varied within limits by adjusting the fuel oil pressure at the lighter. Capacity curves for the sprayer plate are located in the Performance Section.

ATOMIZING REQUIREMENTS

Air or dry steam (400 ° F maximum temperature) is required for atomization. Pressure and flow requirements can be found on the sprayer plate performance curve. It is recommended that lighters firing heavy fuel oil utilize steam for atomization. It is essential that atomizing media piping also be adequately filtered to reduce the potential for sprayer plate pluggage problems. B&W supplied lighter controls incorporate 100 mesh filters for this purpose.

HIGH ENERGY IGNITOR

Separate operating and maintenance instructions for the High Energy Ignitor (HEI) System are attached.

The HEI Power Supply may be mounted to any convenient structural steel. Due to ambient temperature limitations, mounting on the burner windbox is not permissible.

The ignitor is energized during the lighter ignition and post purge periods only and should be retracted at all other times. Ignitor operating time must be limited to the duty cycle specified by the manufacturer. Premature failure of power supply components will result from operation in excess of these limits.

AIR CYLINDER DRIVES

The air cylinder drives for the atomizer and High Energy Ignitor Probe require clean, dry compressed air at 100 to 125 psi. Flow control valves are provided on the cylinder air connections to control the speed of stroke.

IP7_032550

SEAL AIR

Seal air is not required on balanced draft units. On pressure fired units, however, seal air should be supplied at the connection provided in the lighter mounting sleeve. Approximate requirements are 6 SCFM at 2" H_2O above windbox pressure. Aspirating air at 50-90 psi should also be available at this connection on pressure fired units for use during atomizer or HEI probe removal.

PURGE AIR

Air or dry steam at 90-150 psi is required to purge oil from the atomizer when the lighter is taken out of service.

ADJUSTMENTS

Before attempting to operate the lighter, the following checks and ajustments must be made to the lighter, its control and piping:

1. The atomizer and its sprayer plate should be cleaned and checked for correct assembly. Refer to the attached atomizer assembly drawing.

2. Adjustment is provided for positioning the ignitor probe with respect to the lighter shield and atomizer tip. This setting is made by use of the adjustable probe clamp attached to the ignitor drive cylinder rod.

3. The High Energy Ignitor Power Supply must be connected to the HEI probe with the conduit connector provided. Ignitor conduit is supplied in standard 15 ft. length and should *not* be adjusted in the field. Extra conduit length should be coiled and stored in a location where it will not interfere with other lighter components or burner front equipment.

4. The flow control valves on the air cylinder drives should be set to provide a smooth stroke and to prevent slamming the lighter components in either the inserted or retracted positions.

5. The actuator for the air interlock valve should be set to provide 3/16" maximum travel on the valve plunger.

6. The oil, atomizing and purge air lines should be steam cleaned to remove all debris and scale likely to clog the atomizer sprayer plate.

7. All piping connections should be leak tested and the piping should be checked for interferences with the lighter or ignitor stroke. All flexible hoses should be adjusted to hang in a vertical loop to permit lighter and ignitor movement without straining the hoses.

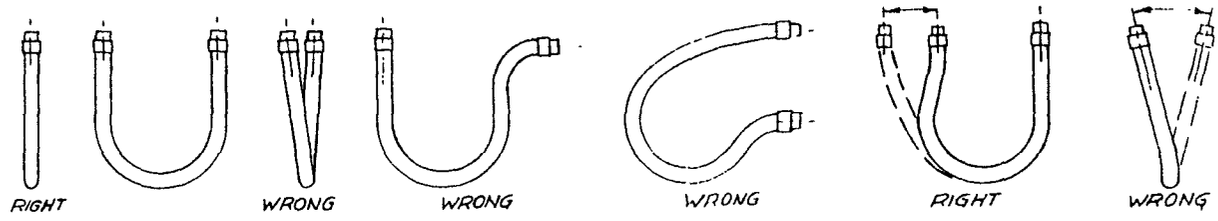

8. Strainers in the oil and atomizing media piping should be checked prior to start-up and cleaned as required. Condition of the strainers should be closely monitored, especially during initial operation.

IP7_032551

OPERATION

Prior to operating the lighter, the operator should be thoroughly familiar with the lighter control, interlocks, main burners, and related equipment. Operation of the lighter in relation to furnace purging, air flow, and main fuel flow is described in the burner operating instructions. Normally, the four (4) operating conditions described below exist for the lighter.

1. **Retracted** - When the lighter is not in use, it should be retracted from its firing position to prevent furnace radiation from over-heating the atomizer sprayer plate and end cap. Lighter fuel oil, atomizing medium, and purge air are turned off and the ignitor is de-energized. Air pressure is normally maintained on the drive cylinders to keep the lighter atomizer and ignitor probe retracted.

2. **Light-Off** - The atomizer is moved to the firing position by reversing the air pressure to the air cylinder drive. When the lighter is in the firing position, the atomizing medium valve is opened to purge condensate from the piping. At the completion of the pre-purge period, the high energy ignitor probe is inserted and energized and the oil shut-off valve is opened. The ignitor probe is energized for the "Trial For Ignition" Period and then retracted by the ignitor drive cylinder independent of the atomizer. If successful lighter ignition is not established during this period, a normal shutdown should be initiated.

3. **Normal Shutdown** - During a normal shutdown of the lighter, all fuel oil is purged from the atomizer to prevent oil from dripping into the burner or windbox and to prevent atomizer coking. Purge media at a minimum of 90 psi is admitted to the atomizer after the fuel oil valve is closed with the High Energy Ignitor inserted and energized. Purging should continue for a minimum of two minutes. When the purge is complete, the ignitor is de-energized and the lighter and ignitor probe are retracted. The atomizing air or steam is left on during the purge period to prevent oil from backing up into the atomizer.

4. **Emergency Shutdown** - The emergency stop sequence requires that the oil and atomizing media valves be closed immediately and the lighter retracted without purging. Stopping in this mode will leave the lighter atomizer full of oil and subject to coking and dripping oil on burner parts, so the lighter should be sequenced through a normal shut-down as soon as conditions permit. The lighter Emergency Stop is required only when purging the atomizer will result in hazaradous conditions.

MAINTENANCE

Since each installation operates under different conditions, a maintenance schedule must be established for each installation. The following maintenance schedule is recommended until operating experience indicates otherwise.

Weekly - Remove and clean the atomizer cap and sprayer plate, to prevent the cap and/or sprayer plate from seizing, a high temperature anti-seize compound should be used on the threads. (See Caution on Page 3).

Sprayer plates orifices are subject to wear so frequent inspection should be made to check for oversized or elongated holes. Orifice sizes can be readily checked by passing a twist drill of the specified size through each of the oil, atomizing medium and exit ports. In general, sprayer plates should be replaced when the orifice drill size exceeds the specified diameter by two drill sizes. Plates showing irregular orifice wear should be replaced immediately due to the potential for problems with maldistribution of the oil spray.

5R91-IV-7A2 Sept 81

IP7_032552

Rapid sprayer plate wear is usually caused by abrasive foreign matter in the oil or moisture in the atomizing medium.

Monthly or as required - The lighter should be sequenced through a normal start and shutdown sequence to allow inspection for leaks in all fuel oil, atomizing media and control air connections. Proper mechanical operation of all moving parts and operation of the High Energy Ignition System should also be verified.

Yearly - All air cylinders should be flushed and lubricated. Condition of packing seals for the atomizer and High Energy Probe should be checked and replaced if necessary.

IP7_032553

REFERENCE LIST

SYM	QTY	DESCRIPTION	DWG	MK
A	1	ATOMIZER ASSY	146569 D	
B	1	COUPLER FOSTER 3/8 PLUG Nº 44-4		
C	1	COUPLER FOSTER 1/2 PLUG Nº 54-4		
D	1	COUPLER FOSTER 3/8 SOCKET Nº 4204H		
E	1	COUPLER FOSTER 1/2 SOCKET Nº 5005H		
F	1	MOUNTING PLATE	134662 B	BA-BB
G	1	RETAINER PLATE	133978 A	AA
H	1	PKG. SQ. BRD 1/4 x 1/4 = 3" LG		
J	1	PKG. SQ. BRD 1/4" = W = 5" LG		
K	1	HIGH ENERGY PROBE		SEE 3/0
L	1	PROBE CLAMP	134663 B	BA/BB
M	2	NUT HEX 3/8" STL		
N	1	BAR THD STL 3/8" - 2 1/2" LG.		
P	1	ATOMIZER SLEEVE ASSY.	167639 B	1 OR 2
R	1	RELEASE PIN AEROFAST C 6-15R		
S	1	POWER SUPPLY UNIT AND CABLE		SEE 3/0
T	1	CAP SCRD 1/2 MI 150°		
U	2	AIR CYLINDER TJ	134672 B	SEE 3/0
V	1	PIN COTTER 1/8" - 1" LG.		
W				
X	1	VLV ASSY 3 WAY 1/8 VER BIK 3208P		
Y	1	SCREW SKT CAP STL 3/8 - 3/4" LG.		
Z	1	PIN McMASTER CARR 3/8 - 1 3/4 Nº 98306D275 (OR EQUAL)		
AA	2	SCREW HEX CAP GR 2 5/16 - 3/4" LG.		
AB	2	WSHR. LOCK 5/16 POS. STL.		
AC	8	SCREW HEX CAP GR 2 1/4 - 1/2" LG.		
AD	8	WSHR. LOCK 1/4 POS. STL.		
AE	1	LIGHTER SLEEVE	153552 B	1 OR 2
AF	1	PROBE GUIDE SLEEVE	134678 B	2
AG	4	MALE ELBOW CAJON B-4-ME		
AH	4	VLV FLOW CONTROL 3/8 PNUETROL F-25-B		
AJ	1	CFA LIGHTER SHIELD ASSY	153594 B	1
AK	1	SUPPORT: SEAL ASSY.	135723 A	

REFERENCE LIST

SYM	QTY	DESCRIPTION	DWG	MK
AL	1	MOUNTING SLEEVE	135724 A	1
AM	4	BUSHING SCRD CAJON B-6-RB-4		
AN	4	NUT HEX 1/2 STL		
AP	1	CLEVIS	135954 A	AA
AQ	1	RELEASE PIN AEROFAST C 6-12R		
AR	1	BAR RND 1018CF 3/8 DIA = 2 7/16 LG (TOE 3/8-16 UNC-2A x 1 LG)		
AS	1	ATOMIZER ALIGNMENT PLATE	135956 A	AA

REVISIONS				
1	ADDED NO. 2 RH & NOTE 3			
2	ADDED SYM 'AL' & F'RWD & RETRACTED POSITION DIM. & QTY OF SYM. 'N' FROM 2 TO 8	1/23/80	BWD/ROW	
3	ADDED SYM. 'AN' & CHG'D SYM. 'AH'	10-10-80	BWD/ROW	
4	CHG'D LG. SYM. 'M' & CHG'D DESCRIPTION SYM. 'D' & 'R'	2/8/82	TAM/ROW	
5	ADDED VIEW FOR HOSE CONN. FOR RCF SPRAYER PLATE	11/1/82	BWD/ROW	
6	CHG'D NO-NP SYM. F, G & L; (ZONE E-13) ADDED TOL. TO 1/2 DIM.	12/3/82	JLB/TAM	
7	CHG'D SYM 'W' FROM THUMB SCR. TO SQ. HD. SET. SCR. & ADDED NOTE "5 & ADDED SYM. AN' & CHG'D QTY. SYM. 'N'.	12/14/82	BWD/TAM	
8	DELETED ASB. SYM 'H' & 'J' CHG DIM. 1/4" WAS 1 ZONE D-11 &	3/13/83	J/TAM	
9	ADDED TOL. TO 'L' DIM. ADDED SYM. 'AQ', 'AR', & 'AS' CHG'D SYM 'S' 'K' & 'H' DELETED SYM. 'W'	2/3/84	BWD/TAM	
10	ADDED NOTE 7 & CHG'D FIRING DIM FROM 8 1/4	3/1/84	BWD/JSB	

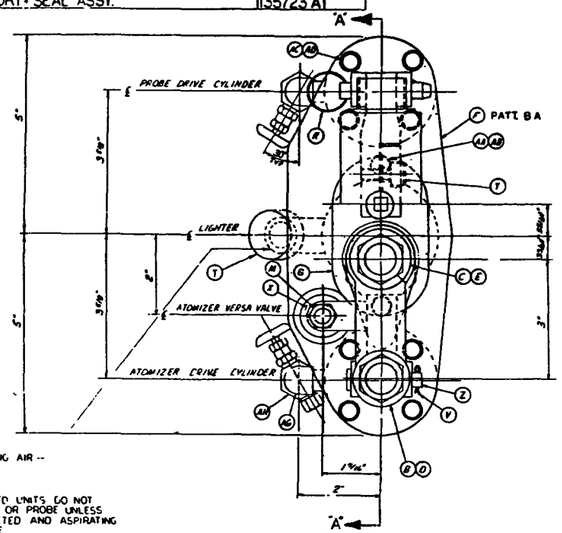

269375 E MK-1 L.H.

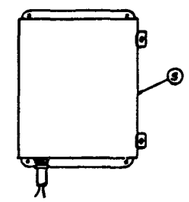

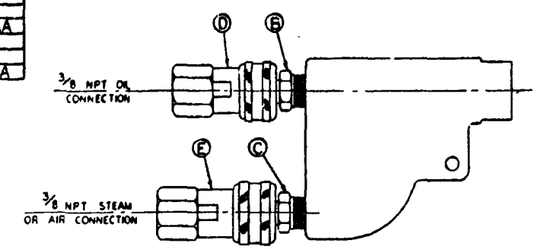

HOSE CONNECTIONS FOR RCF SPRAYER PLATE ONLY

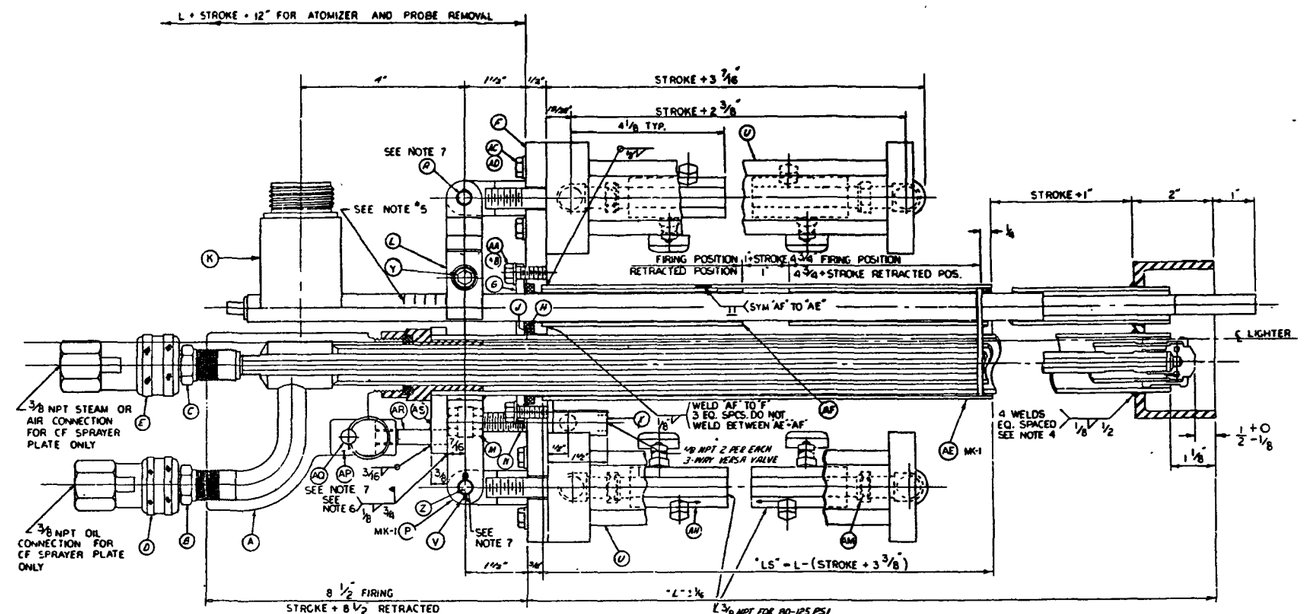

SECTION A-A

NOTES:
1 - LIGHTER MUST BE PACKED TO PROTECT FROM WATER & MOISTURE DURING SHIPMENT.
2 - PLUG ALL PORTS FOR SHIPMENT.
3 - VLV FLOW CONTROL ASSY ('AH' & 'AG' & 'AM') TO BE INSTALLED ON AIR CYLINDERS 'U' BEFORE AIR CYLINDERS ARE BOLTED TO PLATE 'F'
4 - SUPPORT AND SEAL ASSY. SYM 'AK' TO BE ASSEMBLED TO LIGHTER BEFORE LIGHTER SHIELD SYM. AJ IS WELDED IN PLACE. (SEE VIEW 'B-B')
5 - FILE MARKS IN PROBE PIPE WITH PROBE TIP EXTENDING 1 IN BEYOND SHIELD WITH 4 - 1/4 IN. INCREMENTS. FIRST MARK FLUSH WITH PROBE CLAMP SYM. 'L'.
6 - ALIGN SYM 'AS' BEFORE WELDING TO INSURE ATOMIZER BODY IS HORIZONTAL TO ALLOW HOSES TO BE INSTALLED IN A VERTICAL POSITION AND PARALLEL TO ENR ℄ TO PREVENT TWISTING. ERECTOR TO GRIND SYM 'AS' TO INSURE CLEARANCE

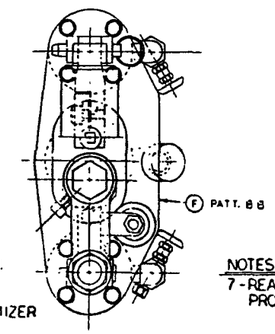

269375 E MK-2 RH.

NOTES:
7 - REAM HOLE WITH 3/8" DRILL TO ENSURE PROPER FIT OF PIN.

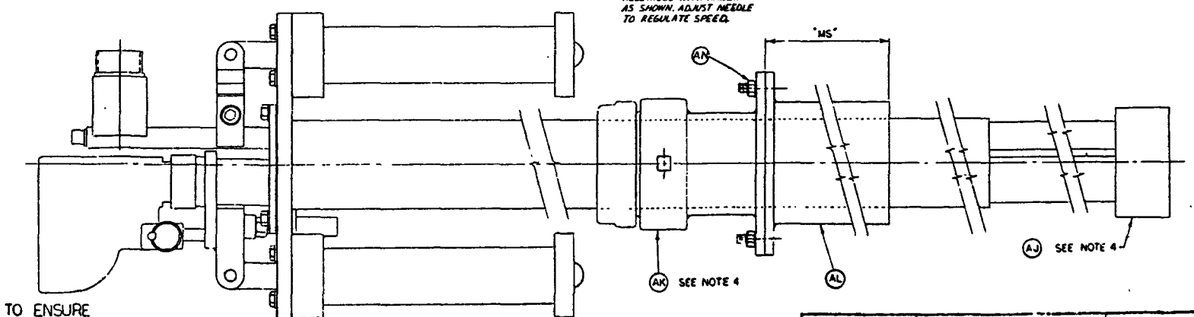

VIEW 'B-B'

DWN. BY P.D. LAGRANGE	ASSEMBLY OIL LIGHTER TYPE CFA	
CHKD. BY WURGLER		
PARKED BY PLC		
APPD. BY P. Clark 12-80		
SCALE 9 = 1		269375 E 10

IP7_032555

REFERENCE LIST

SYM	QTY	DESCRIPTION	DWG	MK NO
A	1	ATOMIZER BODY	301360C	1
B	1	BARREL	151284B	1
C	1	INTERNAL TUBE	151285B	1
D	1	GLAND	188714B	1
E	1	END CAP	173663B	1
F	1	PKG SQ 1/4 × 1/4 × 3 15/16 LG		
G	1	SPRAYER HEAD	153529B	1
H	1	SPRAYER PLATE	153530B	1

REVISIONS

SYMBOL NO.	DESCRIPTION	DATE	APPROVAL
1	ADDED MAINTENANCE EQUIP CHG'D SYM "A" DIM.	12-1-79	RGB
2	CHG'D DWG. SYM "A" & "E" CHG'D QTY & SIZE SYM "F" DELETED FOLL. RING ADDED TOL. TO AL DIM.	12/16/83	TAM

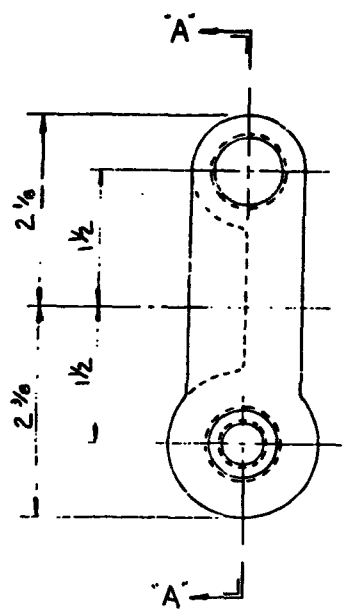

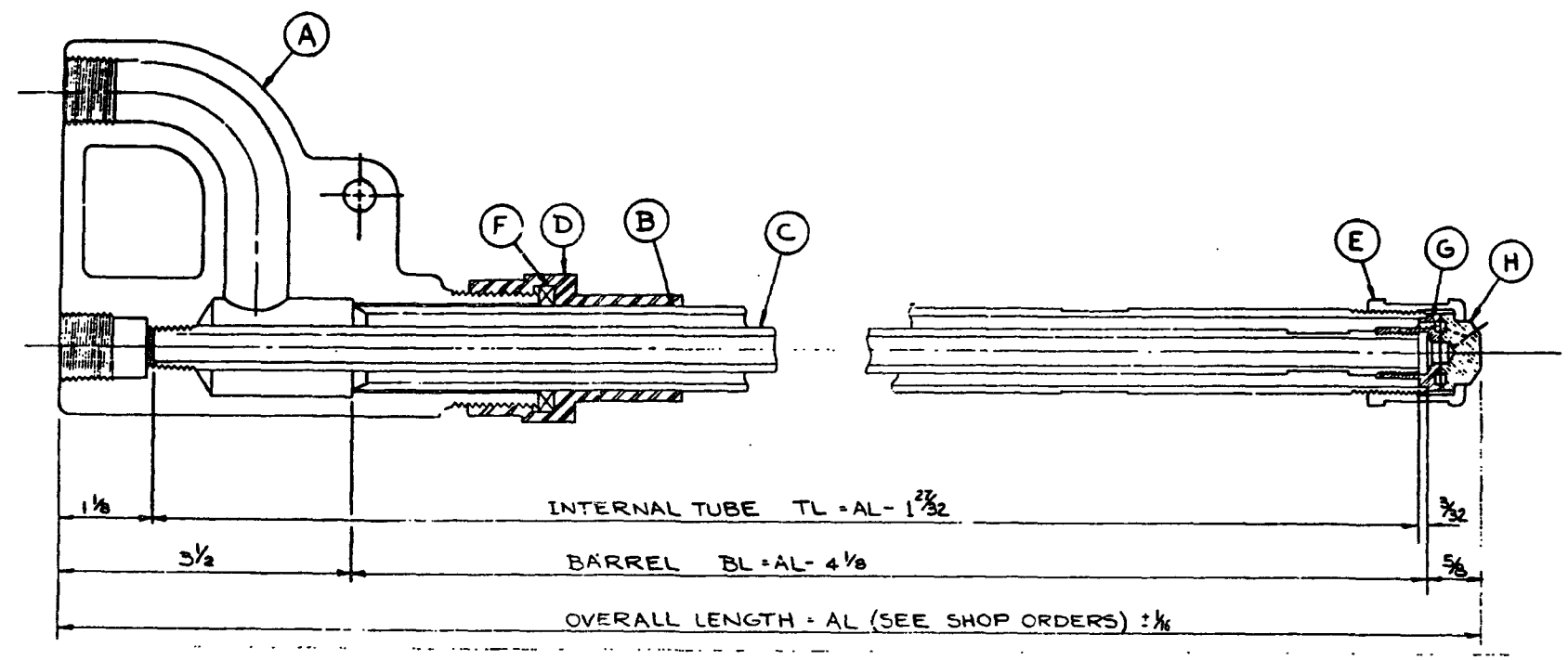

SECTION "A-A"

MAINTENANCE EQUIPMENT

ATOMIZER BRACKET ASS'Y SEE 80528 B
BARREL WRENCH - - - - - - - - BW-6
INTERNAL TUBE WRENCH - - - BW-701
SPRAYER HEAD WRENCH - - - BW-702
END CAP WRENCH - - - - - - - BW-707

DWN. BY WURGLER	ASSEMBLY CF LIGHTER ATOMIZER	THE BABCOCK & WILCOX CO. POWER GENERATION GROUP
CHKD. BY W.C. KISH		
PASSED BY		
APPVD. BY P. Cell.		
STD. SPL. DATE 3 9 79		DWG. NO. 146569 D REV. 2
DO NOT SCALE - USE DIMENSIONS ONLY	SCALE 12" = 1'-0	

IP7_032556

ATTACHMENT 2

FUEL OIL ANALYSIS REPORT

Intermountain Power Service Corporation
Fuels Laboratory
Fuel Oil Analysis Report

Date Analyzed:	7-2-03
Type of Fuel:	FUEL OIL
Supplier:	
Date Sampled:	6-29-03 12:30
Sampling Point:	TRUCK COMPOSITE
Sampled By:	RLH/JB
Sample Number:	8597

Comments: _____

ANALYTICAL RESULTS

Analysis	Method	Results
BTU/lb	ASTM D2382-88	19386
Sulfur %	ASTM D1552-90	0.3%
Cloud Point	ASTM D2500-91	12°F
Pour Point	ASTM D97-87	5°F
Water %	ASTM D1744-83	47.1mg / 0.00471%
Specific Gravity	ASTM D1298-85	.57
API	ASTM D1298-85	33.2 / 32.2
Temperature		75°F

Comments: Wt. - 0.4881 W - 5.8 A - 9.1

Analyzed By: J.B.

IP7_032558

Intermountain Power Service Corporation
Fuels Laboratory
Fuel Oil Analysis Report

Date Analyzed:	7-2-03
Type of Fuel:	FUEL OIL
Supplier:	
Date Sampled:	7-2-03
Sampling Point:	BV-59
Sampled By:	JB
Sample Number:	8598

Comments: _____

ANALYTICAL RESULTS

Analysis	Method	Results
BTU/lb	ASTM D2382-88	19149
Sulfur %	ASTM D1552-90	0.3%
Cloud Point	ASTM D2500-91	-3 °F
Pour Point	ASTM D97-87	-11 °F
Water %	ASTM D1744-83	49.8 µg 0.0049%
Specific Gravity	ASTM D1298-85	.55
API	ASTM D1298-85	33.8/32.5 °C API
Temperature		79 °F

Comments: wt. = 0.3285 W-7.2 6.7

Analyzed By: J.B.

IP7_032559

ATTACHMENT 3

GENERAL COAL PROPERTIES

Jul-03 coal sampled May 2003

Weighted Totals

Mine	sampled Total Tonnage	% of Total	% Na2O	HGI	Softening Temp	HHVC Btu/lb	% H20	% Ash	% Volatile	% Fixed Carbon	% Sulfur
Genwall Resources	27,501.08	5.81	2.04	45.5	2,148	12,426	6.95	8.51	39.04	45.50	0.67
Skyline (Product B) trucks	0.00	0.00	0.97	43.7	2,137	12,562	5.51	6.51	43.20	44.78	0.40
SUFCO (Product A)	195,613.19	41.35	2.96	42.4	2,122	11,292	8.37	11.06	37.57	43.00	0.39
Andalex	64,932.12	13.73	1.12	42.1	2,237	12,084	5.65	10.07	37.27	47.01	0.60
Andalex AMQ	0.00	0.00	0.84	39.1	2,277	11,981	6.64	9.44	34.78	49.14	0.56
West Ridge Resources	47,378.20	10.01	1.16	46.4	2,200	12,848	5.75	7.46	37.06	49.73	1.13
West Ridge Resources spc	27,929.48	5.90	0.94	45.9	2,234	13,069	5.22	7.07	37.53	50.18	1.18
Coastal-Dugout	26,777.20	5.66	0.48	40.4	2,357	11,977	5.80	11.45	35.72	47.03	0.68
Arch-Dugout (product B)	82,943.41	17.53	1.37	41.7	2,217	11,826	6.49	10.82	36.38	46.31	0.56
Arch (spot)	0.00	0.00	0.49	39.3	2,299	11,959	6.22	10.96	33.66	49.16	0.71
Totals	473,074.68	100.00	1.94	42.91	2,184	11,860	6.99	10.16	37.25	45.60	0.60

IP7_032561

INTERMOUNTAIN POWER SERVICE CORPORATION
TRAIN SHIPMENTS, MONTHLY COMPOSITE

DATE: July 11, 2003

MONTH OF: **May, 2003**

MINE: **Andalex Resources**

CONTRACT NUMBER: 00146

SHIPMENT NUMBERS: 03-178, 196, 206, 211, 216, 222 and 224.

TOTAL TONNAGE: 64932.12 TOTAL SHIPMENTS: 7

COAL ANALYSIS				
IPSC LAB, AUTO SAMPLE COMPOSITE			MINE SPLIT	
LAB NO. 32614			LAB NO. 32563	
	AS RECEIVED	DRY BASIS	AS RECEIVED	DRY BASIS
%MOISTURE	5.65	xxxx	7.16	xxxx
%ASH	10.07	10.67	10.10	10.88
%VOLATILE	37.27	39.50	37.18	40.05
%FIXED CARBON (by diff.)	47.01	49.83	45.56	49.07
%SULFUR	0.60	0.64	0.61	0.66
BTU/LB	12084	12808	11833	12746
%FLUORINE	0.0073	0.0077	0.0082	0.0088
	HGI =	42.1	HGI =	n/a

ASH ANALYSIS		
	IPSC LAB	MINE SPLIT
%SODIUM OXIDE, Na20, IGNITED BASIS =	1.12	1.20
FUSION TEMP., REDUCING ATMOSPHERE; ID=	2192	xxxx
ST=	2237	xxxx
HT=	2413	xxxx
FT=	2518	xxxx

INTERMOUNTAIN POWER SERVICE CORPORATION

CALCULATED COMPARISONS
COAL DELIVERIES

MONTH: May, 2003
MINE: **Andalex Resources**
TRAINS: 03-178, 196, 206, 211, 216, 222 and 224.
TONNAGE: 64932.12

IPSC LAB, AUTO SAMPLER	CALCULATED	LAB VALUE
% TOTAL MOISTURE:	6.41	5.65
%DRY ASH:	10.72	10.67
%DRY SULFUR:	0.65	0.64
DRY BTU / LB:	12772	12808
AS RECEIVED BTU / LB:	11953	12084
MINE LAB, FINAL	CALCULATED	LAB VALUE
% TOTAL MOISTURE:	7.12	
%DRY ASH:	11.04	
%DRY SULFUR:	0.67	
DRY BTU / LB:	12740	
AS RECEIVED BTU / LB:	11833	
IPSC LAB, MINE SPLIT	CALCULATED	LAB VALUE
% TOTAL MOISTURE:	7.20	7.16
%DRY ASH:	10.92	10.88
%DRY SULFUR:	0.66	0.66
DRY BTU / LB:	12756	12746
AS RECEIVED BTU / LB:	11838	11833

INTERMOUNTAIN POWER SERVICE CORPORATION
TRAIN SHIPMENTS, MONTHLY COMPOSITE

DATE: July 11, 2003

MONTH OF: **May, 2003**

MINE: **Arch-Dugout**

CONTRACT NUMBER: 00472

SHIPMENT NUMBERS: 03-184, 188, 192, 199, 203, 213, 215, 221 and 226.

TOTAL TONNAGE: 82943.41 TOTAL SHIPMENTS: 9

COAL ANALYSIS				
IPSC LAB, AUTO SAMPLE COMPOSITE			MINE SPLIT	
LAB NO. 32613			LAB NO. xxxx	
	AS RECEIVED	DRY BASIS	AS RECEIVED	DRY BASIS
%MOISTURE	6.49	xxxx	xxxx	xxxx
%ASH	10.82	11.57	xxxx	xxxx
%VOLATILE	36.38	38.91	xxxx	xxxx
%FIXED CARBON (by diff.)	46.31	49.52	xxxx	xxxx
%SULFUR	0.56	0.60	xxxx	xxxx
BTU/LB	11826	12646	xxxx	xxxx
%FLUORINE	0.0074	0.0079	xxxx	xxxx
	HGI =	41.7	HGI =	xxxx

ASH ANALYSIS		
	IPSC LAB	MINE SPLIT
%SODIIUM OXIDE, Na20, IGNITED BASIS =	1.37	xxxx
FUSION TEMP., REDUCING ATMOSPHERE; ID=	2180	xxxx
ST=	2217	xxxx
HT=	2254	xxxx
FT=	2434	xxxx

INTERMOUNTAIN POWER SERVICE CORPORATION

CALCULATED COMPARISONS
COAL DELIVERIES

MONTH: May, 2003
MINE: **Arch-Dugout 00472**
TRAINS: 03-184, 188, 192, 199, 203, 213, 215, 221 and 226.
TONNAGE: 82943.41

IPSC LAB, AUTO SAMPLER	CALCULATED	LAB VALUE
% TOTAL MOISTURE:	7.22	6.49
%DRY ASH:	11.47	11.57
%DRY SULFUR:	0.60	0.60
DRY BTU / LB:	12610	12646
AS RECEIVED BTU / LB:	11699	11826
MINE LAB, FINAL	CALCULATED	LAB VALUE
% TOTAL MOISTURE:	7.47	
%DRY ASH:	12.22	
%DRY SULFUR:	0.59	
DRY BTU / LB:	12515	
AS RECEIVED BTU / LB:	11580	
IPSC LAB, MINE SPLIT	CALCULATED	LAB VALUE
% TOTAL MOISTURE:	7.51	
%DRY ASH:	12.10	
%DRY SULFUR:	0.59	
DRY BTU / LB:	12506	
AS RECEIVED BTU / LB:	11567	

INTERMOUNTAIN POWER SERVICE CORPORATION
TRAIN SHIPMENTS, MONTHLY COMPOSITE

DATE: July 11, 2003

MONTH OF: **May, 2003**

MINE: **Coastal-Dugout**

CONTRACT NUMBER: 70150

SHIPMENT NUMBERS: 03-182, 189 and 195.

TOTAL TONNAGE: 26777.20 TOTAL SHIPMENTS: 3

COAL ANALYSIS				
IPSC LAB, AUTO SAMPLE COMPOSITE			MINE SPLIT	
LAB NO. 32616			LAB NO. xxxx	
	AS RECEIVED	DRY BASIS	AS RECEIVED	DRY BASIS
%MOISTURE	5.80	xxxx	xxxx	xxxx
%ASH	11.45	12.15	xxxx	xxxx
%VOLATILE	35.72	37.92	xxxx	xxxx
%FIXED CARBON (by diff.)	47.03	49.93	xxxx	xxxx
%SULFUR	0.68	0.72	xxxx	xxxx
BTU/LB	11977	12715	xxxx	xxxx
%FLUORINE	0.0086	0.0091	xxxx	xxxx
	HGI =	40.4	HGI =	xxxx

ASH ANALYSIS		
	IPSC LAB	MINE SPLIT
%SODIIUM OXIDE, Na20, IGNITED BASIS =	0.48	xxxx
FUSION TEMP., REDUCING ATMOSPHERE; ID=	2312	xxxx
ST=	2357	xxxx
HT=	2407	xxxx
FT=	2676	xxxx

INTERMOUNTAIN POWER SERVICE CORPORATION

CALCULATED COMPARISONS
COAL DELIVERIES

MONTH: May, 2003
MINE: **Coastal-Dugout 70150**
TRAINS: 03-182, 189 and 195.
TONNAGE: 26777.20

IPSC LAB, AUTO SAMPLER	CALCULATED	LAB VALUE
% TOTAL MOISTURE:	6.57	5.80
%DRY ASH:	12.19	12.15
%DRY SULFUR:	0.72	0.72
DRY BTU / LB:	12710	12715
AS RECEIVED BTU / LB:	11875	11977
MINE LAB, FINAL	CALCULATED	LAB VALUE
% TOTAL MOISTURE:	6.47	
%DRY ASH:	13.20	
%DRY SULFUR:	0.75	
DRY BTU / LB:	12491	
AS RECEIVED BTU / LB:	11683	
IPSC LAB, MINE SPLIT	CALCULATED	LAB VALUE
% TOTAL MOISTURE:	6.53	
%DRY ASH:	13.14	
%DRY SULFUR:	0.74	
DRY BTU / LB:	12562	
AS RECEIVED BTU / LB:	11742	

INTERMOUNTAIN POWER SERVICE CORPORATION
TRAIN SHIPMENTS, MONTHLY COMPOSITE

DATE: July 11, 2003

MONTH OF: **May, 2003**

MINE: **Genwal Resources**

CONTRACT NUMBER: 99405

SHIPMENT NUMBERS: 03-197, 228 and 229.

TOTAL TONNAGE: 27501.08 TOTAL SHIPMENTS: 3

COAL ANALYSIS				
IPSC LAB, AUTO SAMPLE COMPOSITE			MINE SPLIT	
LAB NO. 32617			LAB NO. 32580	
	AS RECEIVED	DRY BASIS	AS RECEIVED	DRY BASIS
%MOISTURE	6.95	xxxx	7.62	xxxx
%ASH	8.51	9.14	8.40	9.09
%VOLATILE	39.04	41.96	38.64	41.83
%FIXED CARBON (by diff.)	45.50	48.90	45.34	49.08
%SULFUR	0.67	0.72	0.71	0.77
BTU/LB	12426	13355	12396	13419
%FLUORINE	0.0072	0.0077	0.0088	0.0095
	HGI =	45.5	HGI =	45.2

ASH ANALYSIS		
	IPSC LAB	MINE SPLIT
%SODIUM OXIDE, Na20, IGNITED BASIS =	2.04	1.91
FUSION TEMP., REDUCING ATMOSPHERE; ID=	2148	2179
ST=	2233	2223
HT=	2284	2266
FT=	2371	2402

INTERMOUNTAIN POWER SERVICE CORPORATION

CALCULATED COMPARISONS
COAL DELIVERIES

MONTH: May, 2003
MINE: **Genwal Resources**
TRAINS: 03-197, 228 and 229.
TONNAGE: 27501.08

IPSC LAB, AUTO SAMPLER	CALCULATED	LAB VALUE
% TOTAL MOISTURE:	7.65	6.95
%DRY ASH:	9.02	9.14
%DRY SULFUR:	0.75	0.72
DRY BTU / LB:	13389	13355
AS RECEIVED BTU / LB:	12365	12426
MINE LAB, FINAL	CALCULATED	LAB VALUE
% TOTAL MOISTURE:	7.89	
%DRY ASH:	9.29	
%DRY SULFUR:	0.83	
DRY BTU / LB:	13354	
AS RECEIVED BTU / LB:	12301	
IPSC LAB, MINE SPLIT	CALCULATED	LAB VALUE
% TOTAL MOISTURE:	7.94	7.62
%DRY ASH:	9.06	9.09
%DRY SULFUR:	0.74	0.77
DRY BTU / LB:	13346	13419
AS RECEIVED BTU / LB:	12287	12396

INTERMOUNTAIN POWER SERVICE CORPORATION
TRAIN SHIPMENTS, MONTHLY COMPOSITE

DATE: July 15, 2003

MONTH OF: **May, 2003**

MINE: **Southern Utah Fuel Co.**

CONTRACT NUMBER: 99149

SHIPMENT NUMBERS: 03-179,181,183,185,187,191,193,194,198,200,202,204,205, 207,209,210,214,217,219,223 and 225.

TOTAL TONNAGE: 195613.19 TOTAL SHIPMENTS: 21

COAL ANALYSIS				
IPSC LAB, AUTO SAMPLE COMPOSITE			MINE SPLIT	
LAB NO. 32612			LAB NO. 32776	
	AS RECEIVED	DRY BASIS	AS RECEIVED	DRY BASIS
%MOISTURE	8.37	xxxx	9.05	xxxx
%ASH	11.06	12.07	11.26	12.38
%VOLATILE	37.57	41.00	37.54	41.28
%FIXED CARBON (by diff.)	43.00	46.93	42.15	46.34
%SULFUR	0.39	0.43	0.42	0.46
BTU/LB	11292	12324	11118	12224
%FLUORINE	0.0072	0.0079	xxxx	xxxx
	HGI =	42.4	HGI =	xxxx

ASH ANALYSIS		
	IPSC LAB	MINE SPLIT
%SODIUM OXIDE, Na20, IGNITED BASIS =	2.96	xxxx
FUSION TEMP., REDUCING ATMOSPHERE; ID=	2122	xxxx
ST=	2154	xxxx
HT=	2183	xxxx
FT=	2271	xxxx

INTERMOUNTAIN POWER SERVICE CORPORATION

CALCULATED COMPARISONS
COAL DELIVERIES

MONTH: May, 2003
MINE: **Southern Utah Fuel Co.**
TRAINS: 03-179,181,183,185,187,191,193,194,198,200,202,204,205,207,209,210, 214,217,219,223 and 225.
TONNAGE: 195,613.19

IPSC LAB, AUTO SAMPLER	CALCULATED	LAB VALUE
% TOTAL MOISTURE:	9.21	8.37
%DRY ASH:	12.19	12.07
%DRY SULFUR:	0.44	0.43
DRY BTU / LB:	12259	12324
AS RECEIVED BTU / LB:	11130	11292
MINE LAB, FINAL	CALCULATED	LAB VALUE
% TOTAL MOISTURE:	10.02	
%DRY ASH:	12.35	
%DRY SULFUR:	0.43	
DRY BTU / LB:	12253	
AS RECEIVED BTU / LB:	11025	
IPSC LAB, MINE SPLIT	CALCULATED	LAB VALUE
% TOTAL MOISTURE:	9.85	9.05
%DRY ASH:	12.28	12.38
%DRY SULFUR:	0.44	0.46
DRY BTU / LB:	12258	12224
AS RECEIVED BTU / LB:	11051	11118

INTERMOUNTAIN POWER SERVICE CORPORATION
TRAIN SHIPMENTS, MONTHLY COMPOSITE

DATE: July 11, 2003

MONTH OF: **May, 2003**

MINE: **West Ridge**

CONTRACT NUMBER: 00442

SHIPMENT NUMBERS: 03-180, 190, 201, 212 and 218.

TOTAL TONNAGE: 47378.20 TOTAL SHIPMENTS: 5

COAL ANALYSIS				
IPSC LAB, AUTO SAMPLE COMPOSITE			MINE SPLIT	
LAB NO. 32615			LAB NO. 32582	
	AS RECEIVED	DRY BASIS	AS RECEIVED	DRY BASIS
%MOISTURE	5.75	xxxx	6.33	xxxx
%ASH	7.46	7.92	7.39	7.89
%VOLATILE	37.06	39.32	36.88	39.37
%FIXED CARBON (by diff.)	49.73	52.76	49.40	52.74
%SULFUR	1.13	1.20	1.16	1.24
BTU/LB	12848	13632	12746	13607
%FLUORINE	0.0066	0.0070	0.0062	0.0066
	HGI =	46.4	HGI =	46.2

ASH ANALYSIS		
	IPSC LAB	MINE SPLIT
%SODIIUM OXIDE, Na20, IGNITED BASIS =	1.16	1.03
FUSION TEMP., REDUCING ATMOSPHERE; ID=	2162	2208
ST=	2200	2242
HT=	2239	2373
FT=	2478	2529

INTERMOUNTAIN POWER SERVICE CORPORATION

CALCULATED COMPARISONS
COAL DELIVERIES

MONTH: May, 2003
MINE: **West Ridge 00442**
TRAINS: 03-180, 190, 201, 212 and 218.
TONNAGE: 47378.20

IPSC LAB, AUTO SAMPLER	CALCULATED	LAB VALUE
% TOTAL MOISTURE:	6.59	5.75
%DRY ASH:	8.11	7.92
%DRY SULFUR:	1.22	1.20
DRY BTU / LB:	13610	13632
AS RECEIVED BTU / LB:	12713	12848
MINE LAB, FINAL	CALCULATED	LAB VALUE
% TOTAL MOISTURE:	6.48	
%DRY ASH:	8.30	
%DRY SULFUR:	1.24	
DRY BTU / LB:	13658	
AS RECEIVED BTU / LB:	12773	
IPSC LAB, MINE SPLIT	CALCULATED	LAB VALUE
% TOTAL MOISTURE:	6.55	6.33
%DRY ASH:	8.13	7.89
%DRY SULFUR:	1.23	1.24
DRY BTU / LB:	13629	13607
AS RECEIVED BTU / LB:	12736	12746

INTERMOUNTAIN POWER SERVICE CORPORATION
TRAIN SHIPMENTS, MONTHLY COMPOSITE

DATE: July 11, 2003

MONTH OF: **May, 2003**

MINE: **West Ridge 00479**

CONTRACT NUMBER: 00479

SHIPMENT NUMBERS: 03-186, 208 and 227.

TOTAL TONNAGE: 27929.48 TOTAL SHIPMENTS: 3

COAL ANALYSIS				
IPSC LAB, AUTO SAMPLE COMPOSITE			MINE SPLIT	
LAB NO. 32618			LAB NO. 32581	
	AS RECEIVED	DRY BASIS	AS RECEIVED	DRY BASIS
%MOISTURE	5.22	xxxx	6.17	xxxx
%ASH	7.07	7.46	6.86	7.31
%VOLATILE	37.53	39.60	37.14	39.58
%FIXED CARBON (by diff.)	50.18	52.94	49.83	53.11
%SULFUR	1.18	1.24	1.16	1.24
BTU/LB	13069	13788	12941	13792
%FLUORINE	0.0055	0.0058	0.0058	0.0062
	HGI =	45.9	HGI =	47.4

ASH ANALYSIS		
	IPSC LAB	MINE SPLIT
%SODIUM OXIDE, Na20, IGNITED BASIS =	0.94	0.91
FUSION TEMP., REDUCING ATMOSPHERE; ID=	2185	2223
ST=	2234	2290
HT=	2367	2396
FT=	2532	2501

INTERMOUNTAIN POWER SERVICE CORPORATION

CALCULATED COMPARISONS
COAL DELIVERIES

MONTH: May, 2003
MINE: **West Ridge 00479**
TRAINS: 03-186, 208 and 227.
TONNAGE: 27929.48

IPSC LAB, AUTO SAMPLER	CALCULATED	LAB VALUE
% TOTAL MOISTURE:	5.84	5.22
%DRY ASH:	7.33	7.46
%DRY SULFUR:	1.23	1.24
DRY BTU / LB:	13721	13788
AS RECEIVED BTU / LB:	12920	13069
MINE LAB, FINAL	CALCULATED	LAB VALUE
% TOTAL MOISTURE:	6.41	
%DRY ASH:	7.65	
%DRY SULFUR:	1.24	
DRY BTU / LB:	13752	
AS RECEIVED BTU / LB:	12870	
IPSC LAB, MINE SPLIT	CALCULATED	LAB VALUE
% TOTAL MOISTURE:	6.45	6.17
%DRY ASH:	7.49	7.31
%DRY SULFUR:	1.25	1.24
DRY BTU / LB:	13755	13792
AS RECEIVED BTU / LB:	12867	12941

TLT-Babcock, INC.

CONTRACT INFORMATION SHEET

A.O.

PERFORMANCE DATA ☒ F.D. FAN ☐ I.D. FAN ☐ P.A. FAN

(ALL QUANTITIES ARE PER FAN) ASSUMED BAROMETRIC PRESSURE: 25.20 IN. HG. 4676' elev.

Two fan operation

OPERATING POINT	1	2	3	4	5	6
BOILER LOAD	TB	MCR	100	75	50	25
INLET FLOW, M LBS/HR	4018.3	3335.6	3135.8	2461.7	1712.2	904.1
INLET VOLUME, MCFM	1154.7	958.5	901.1	707.4	492.0	259.8
INLET TEMP., F.	110	110	110	110	110	110
INLET DENSITY, LBS/CU. FT.	.058	.058	.058	.058	.058	.058
INLET PRESSURE, IN. WG.	-1.5	-1.2	-1.1	-0.7	-0.4	-0.1
STATIC PRESS. INCR, IN. WG.	19.5	10.9	10.0	7.2	4.83	2.97
DYNAMIC PRESS. AT INLET, IN. WG.	0.98					
LOSS FOR TURNING BEND AND DAMPER, IN. WG.	0.30					
LOSS FOR SILENCER INLET/OUTLET, IN. WG.	0.50					
TOTAL PRESS. INCR, IN. WG.	21.28	12.12	11.08	7.87	5.15	3.06
TOTAL DELIVERY HEAD (ADIABATIC), FT. GAS	1867	1075	984	699	460	274
FAN EFFICIENCY	88.0	89.3	88.0	76.5	61.0	40.0
POWER REQUIRED AT FAN SHAFT, HP.	4305	2027	1770	1136	652	312

FAN SPEED: 880 RPM Continued on C.I.S. 6B

FAN TORQUE AT MAX. POINT: 25,693 FT. LBS.

FAN WR^2: 30,840 $LB\text{-}FT^2$

DESIGN CONDITIONS BASED ON ☐ TLT-B ☒ PURCHASER SPECS
FOR GUARANTEE PERFORMANCE SEE CIS-7

FOR HEAD VS. VOLUME DIAGRAM SEE DWG:
FOR SPEED-TORQUE CURVE SEE DWG:

REL. NO. AND DATE 0-1/15/82

CONTRACT NO. 548-0581

TLT-Babcock, INC.

CONTRACT INFORMATION SHEET

A.O.

PERFORMANCE DATA ☒ F.D. FAN ☐ I.D. FAN ☐ P.A. FAN

(ALL QUANTITIES ARE PER FAN) ASSUMED BAROMETRIC PRESSURE: 25.20 IN. HG. 4676' elev.

Single Fan Operation

OPERATING POINT	7	8	9	10	11	
BOILER LOAD	MCR	100	75	50	25	
INLET FLOW, M LBS/HR	6671.2	6271.7	4923.5	3424.3	1808.2	
INLET VOLUME, MCFM	1917.0	1802.2	1414.8	984.0	519.6	
INLET TEMP., F.	110	110	110	110	110	
INLET DENSITY, LBS/CU. FT.	.058	.058	.058	.058	.058	
INLET PRESSURE, IN. WG.	-1.20	-1.10	-0.7	-0.4	-0.1	
STATIC PRESS. INCR, IN. WG.	10.9	10.0	7.2	4.83	2.97	
DYNAMIC PRESS. AT INLET, IN. WG.						
LOSS FOR TURNING BEND AND DAMPER, IN. WG.						
LOSS FOR SILENCER INLET/OUTLET, IN. WG.						
TOTAL PRESS. INCR, IN. WG.	15.81	14.34	9.87	6.12	3.33	
TOTAL DELIVERY HEAD (ADIABATIC), FT. GAS	1396	1266	876	549	298	
FAN EFFICIENCY	72.5	73.0	73.5	69.5	55.0	
POWER REQUIRED AT FAN SHAFT, HP.	6487	5493	2963	1366	495	

FAN SPEED: 880 RPM

FAN TORQUE AT MAX. POINT: 38,715 FT. LBS.

FAN WR^2: 30,840 $LB\text{-}FT^2$

DESIGN CONDITIONS BASED ON ☐ TLT-B ☒ PURCHASER SPECS
FOR GUARANTEE PERFORMANCE SEE CIS-7

FOR HEAD VS. VOLUME DIAGRAM SEE DWG:
FOR SPEED-TORQUE CURVE SEE DWG:

REL. NO. AND DATE 0-1/15/82

CONTRACT NO. 548-0581

-TLT 70014

STARTING TORQUE CURVE

PREDICTED PERFORMANCE

AXIAL FLOW FAN WITH BLADE ADJUSTMENT SIZE: FAF 37.5/18-1

FAN SPEED (N): 880/700 RPM

MOMENT OF INERTIA (WR^2): 30,840 LB X FT^2

POWER REQ'D. @ MAX. POINT (N): 6487 BHP

FAN TORQUE @ MAX. POINT (M_D): 38,716 FT-LBS

MOTOR STUB RADIAL LOAD (P_R): 2400 LBS

MOTOR STUB AXIAL LOAD (P_A): 0 LBS

FAN PERFORMANCE CURVE:

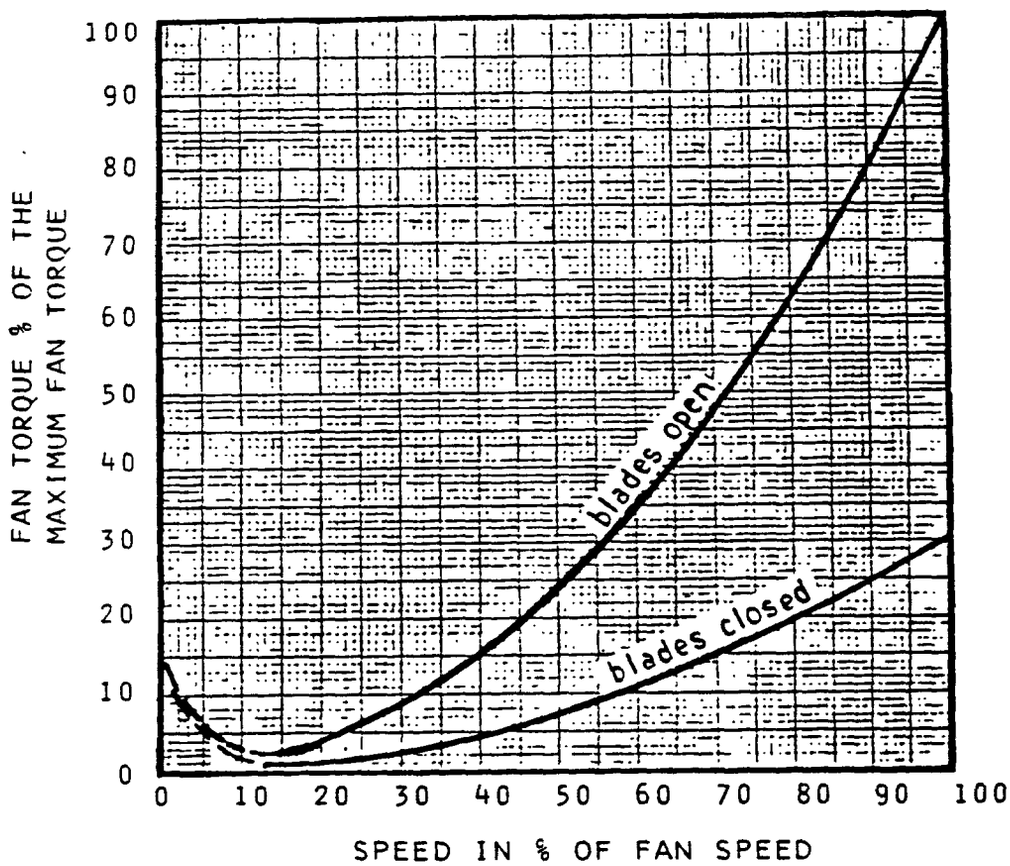

CUSTOMER: Intermountain Power Project
Intermountain Generating Station Units 1, 2, 3 & 4
Project File 9255.62.3402
Forced Draft Fans ENGR:

TLT-Babcock Contract No. 548-0581/0591/0601/0611
DRAWING NO. B-TLT 70014

Page no.

TLT - Babcock Inc.

IP7_032578

PERFORMANCE TEST RESULTS

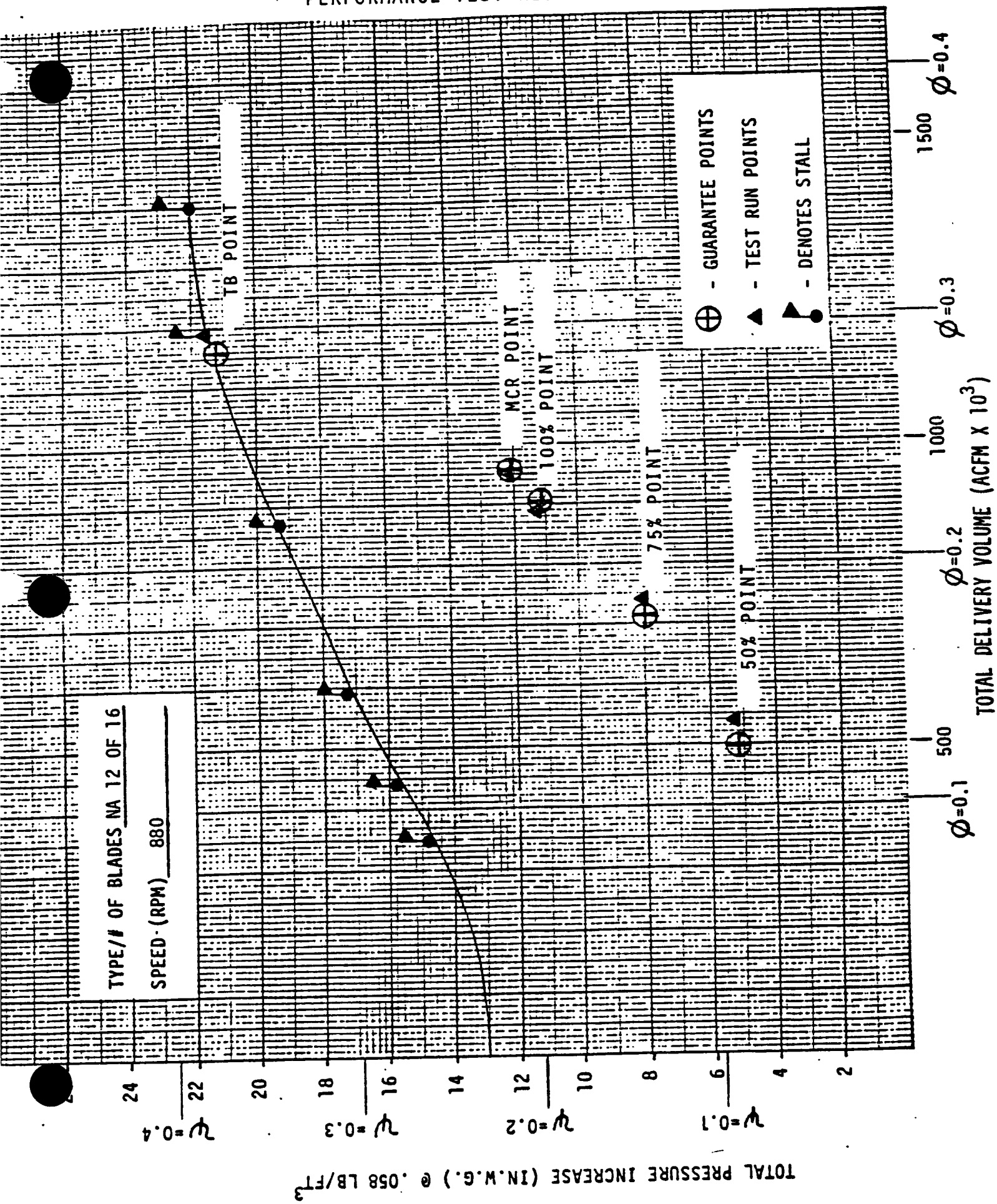

IP7_032579

PERFORMANCE TEST RESULTS

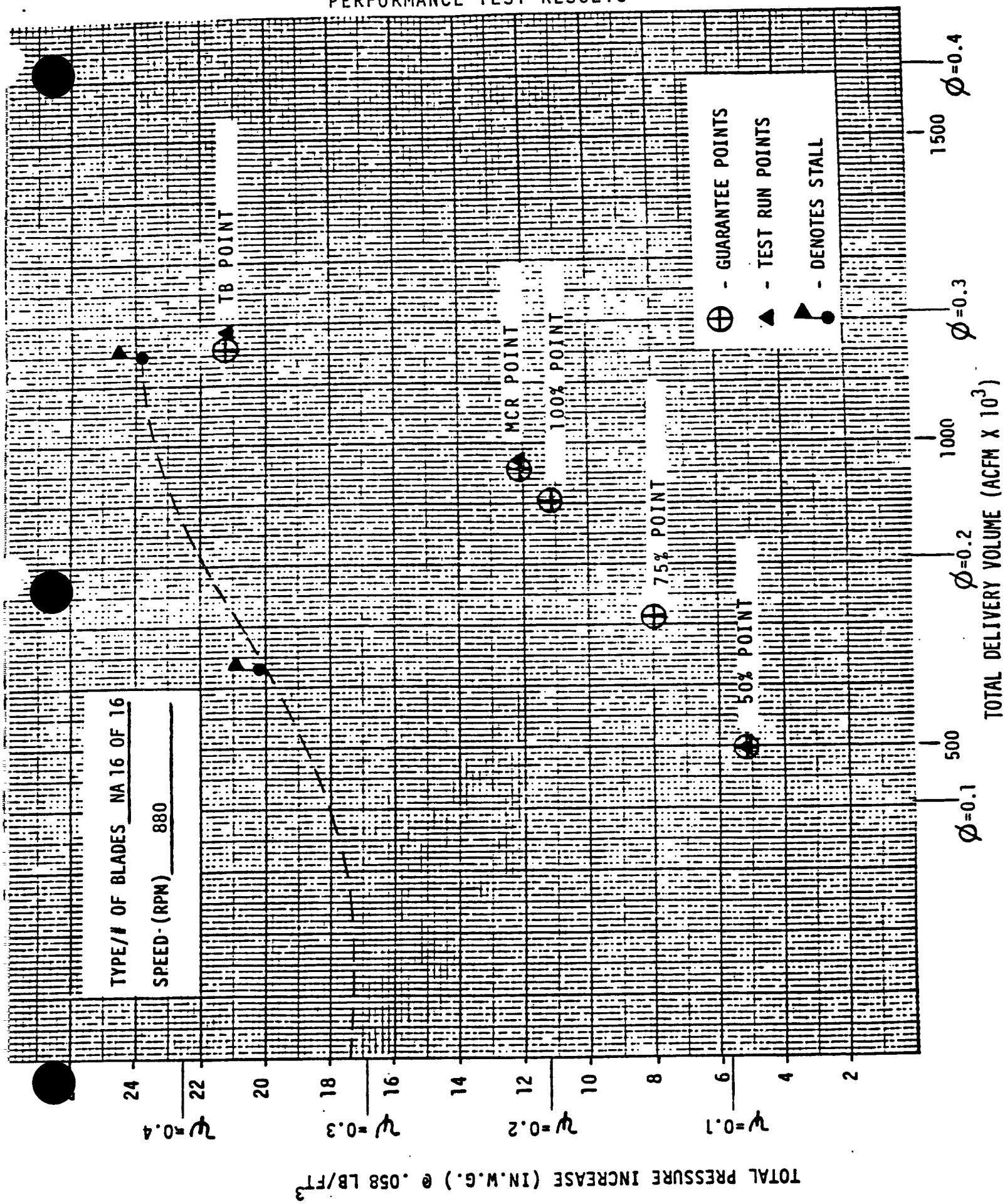

IP7_032580

PERFORMANCE TEST RESULTS

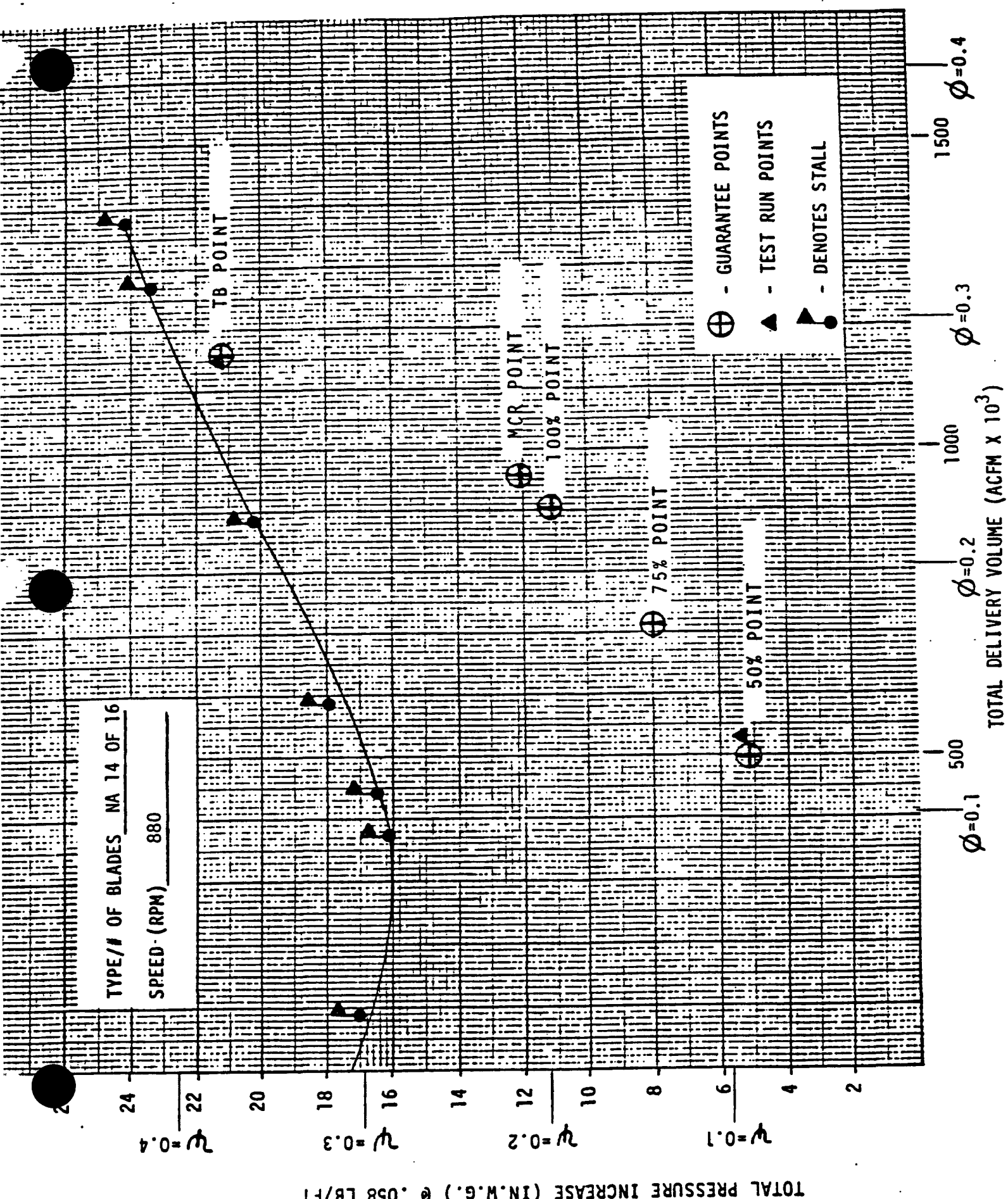

IP7_032581

PERFORMANCE TEST RESULTS

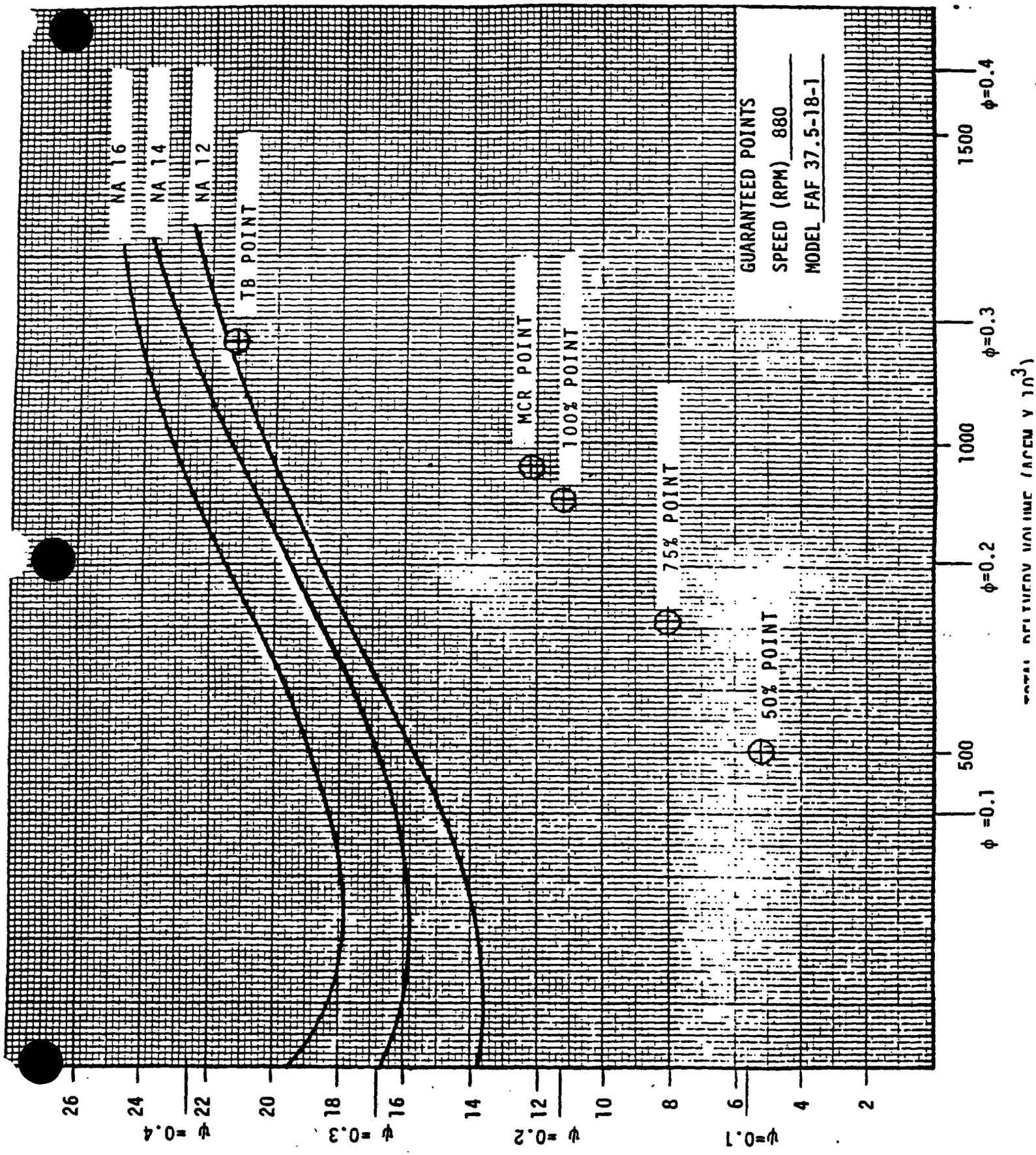

IP7_032582

TLT-BABCOCK, INC.

VARIABLE PITCH AXIAL FAN

PREDICTED PERFORMANCE

TYPE FAF 37.5 / 18.0 - 1

SPEED (RPM) - 880 NO. STAGES - 1

BLADE TYPE - N.A. NO. BLADES/STAGE - 16

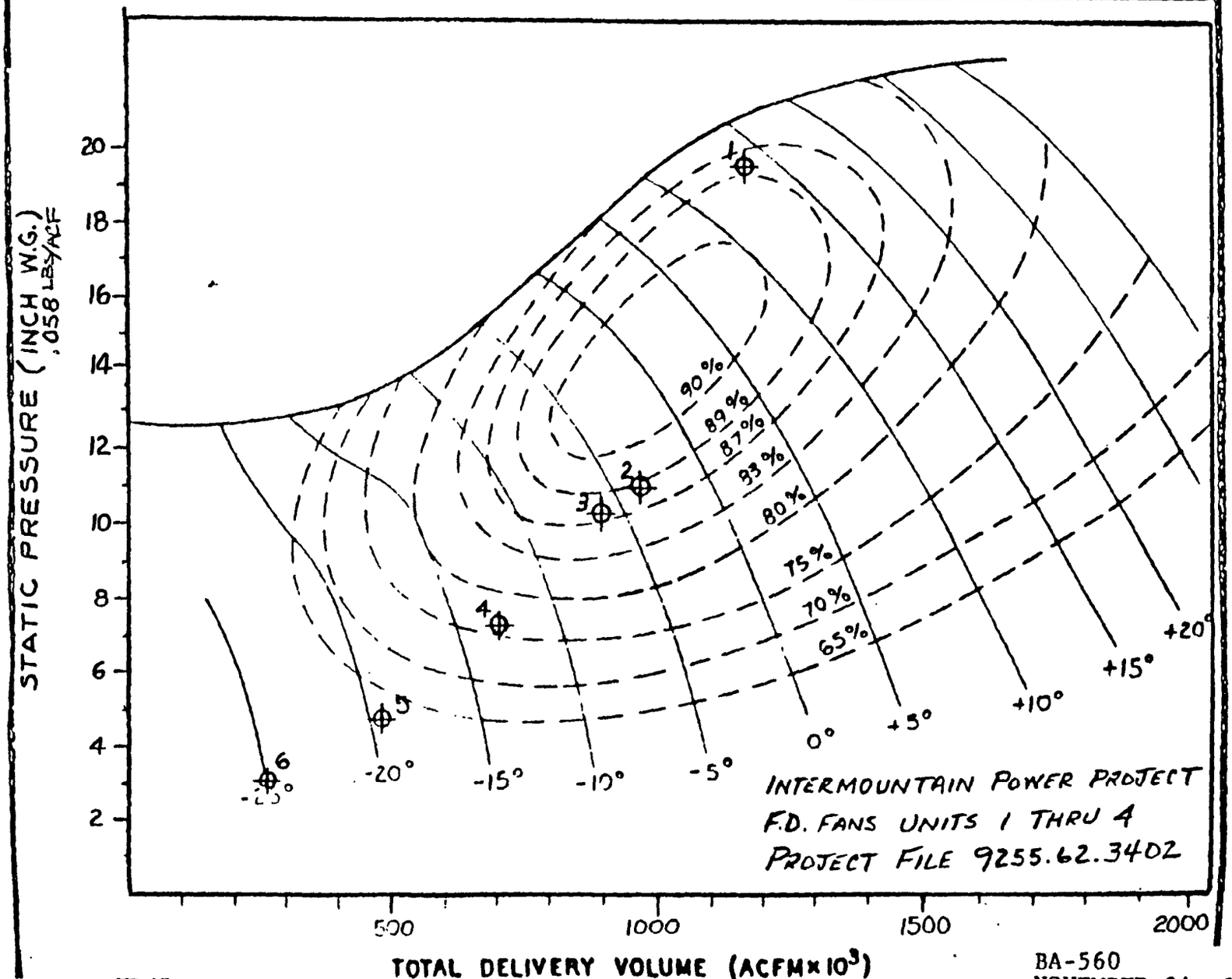

TWO FAN OPERATION

BA-560
NOVEMBER 24, 1981
Page 5-4A

IP7_032583

TLT-BABCOCK, INC.

VARIABLE PITCH AXIAL FAN

PREDICTED PERFORMANCE

TYPE FAF 37.5/18.0-1

SPEED (RPM) - 880 NO. STAGES - 1

BLADE TYPE - N.A. NO. BLADES/STAGE - 16

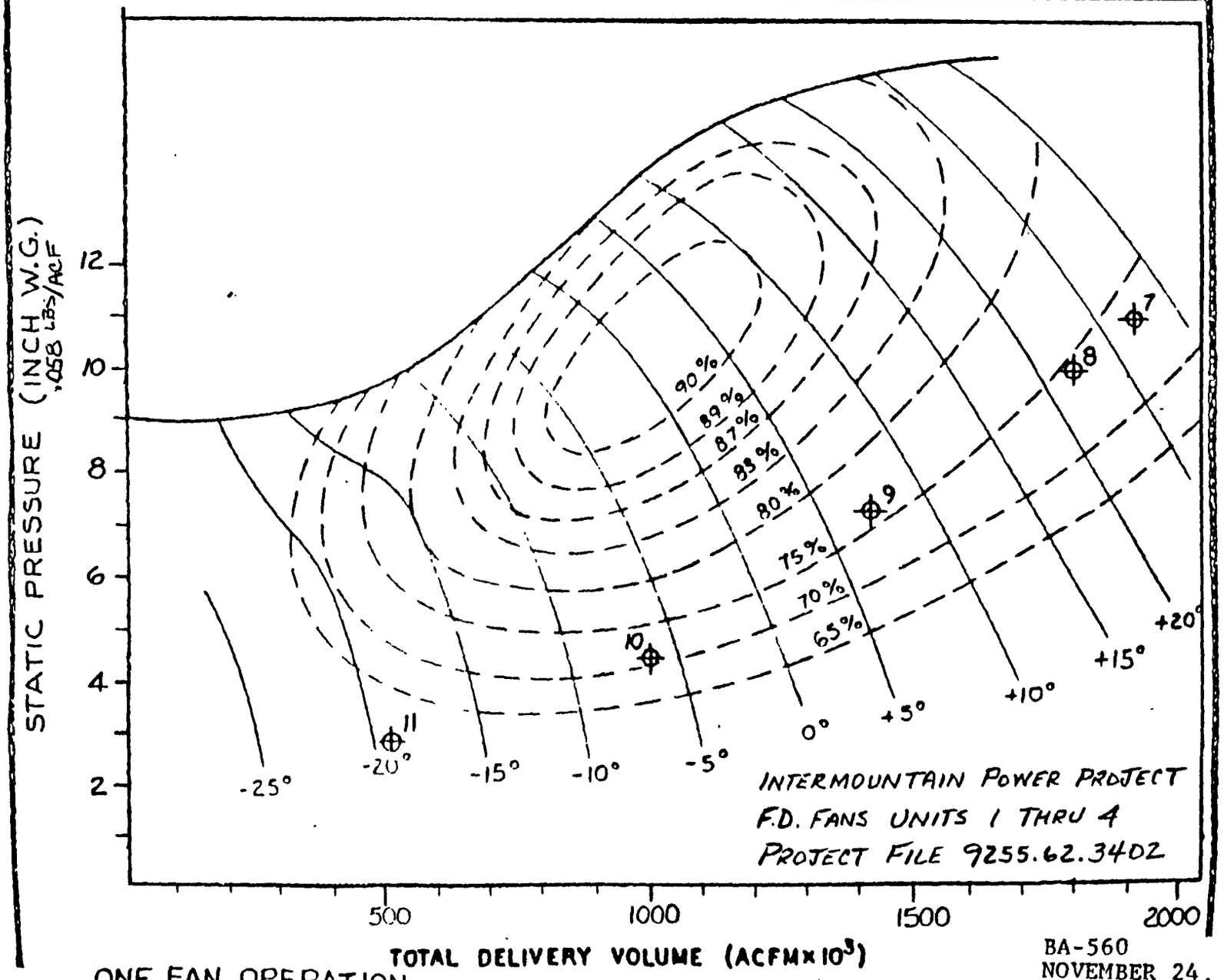

ONE FAN OPERATION

BA-560
NOVEMBER 24, 1981
Page 5-4 B

IP7_032584

TLT-BABCOCK, INC.

VARIABLE PITCH AXIAL FAN

PREDICTED PERFORMANCE

TYPE FAF 37.5/18.0-1

SPEED (RPM) - 700 **NO. STAGES** - 1

BLADE TYPE - N.A. **NO. BLADES/STAGE** - 16

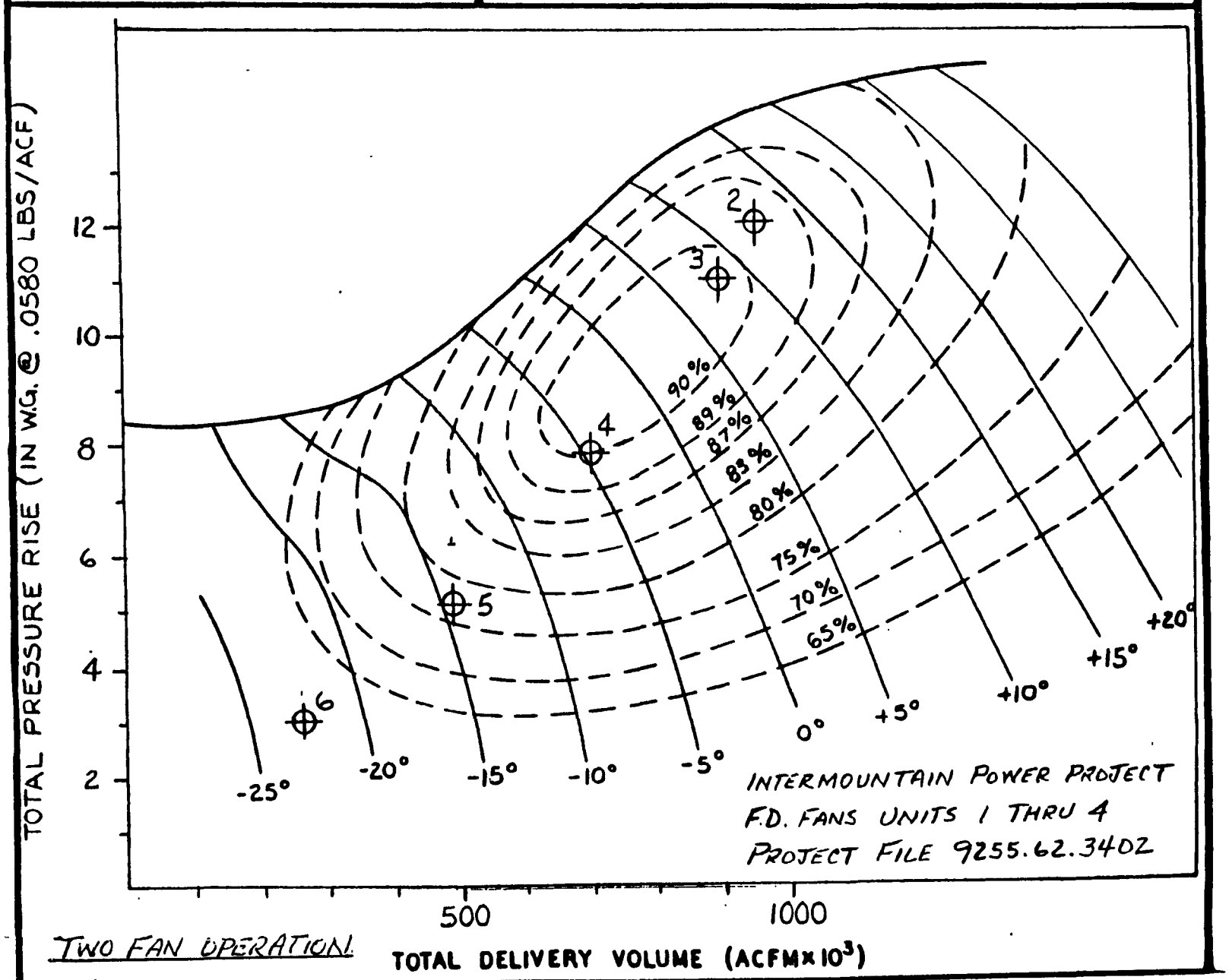

TWO FAN OPERATION

IP7_032585

TLT-BABCOCK, INC.
VARIABLE PITCH AXIAL FAN
PREDICTED PERFORMANCE

TYPE FAF 37.5/18.0-1
SPEED (RPM) - 880/700 **NO. STAGES** - 1
BLADE TYPE - N.A. **NO. BLADES/STAGE** - 16

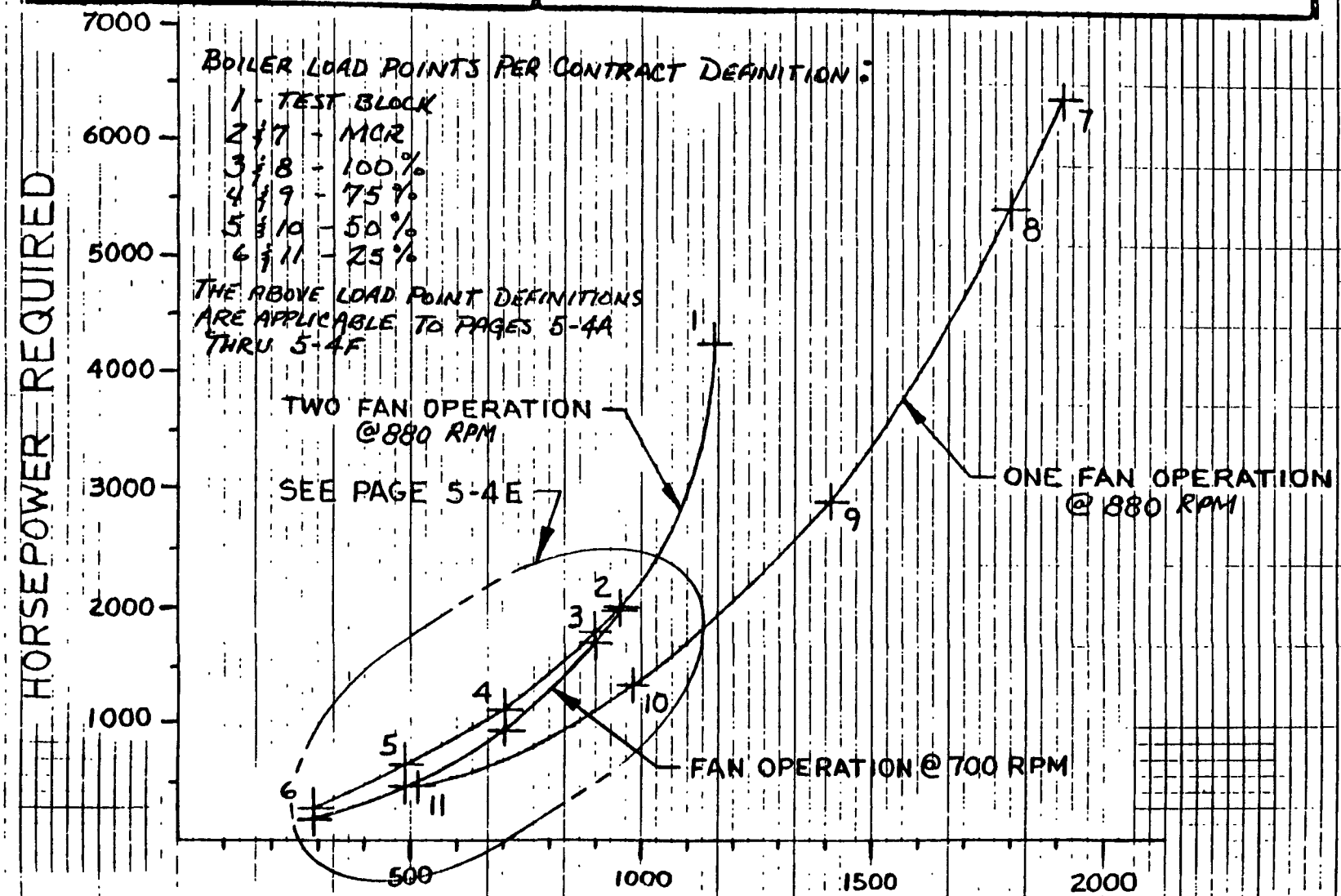

TOTAL DELIVERY VOLUME (ACFM × 10^3)

INTERMOUNTAIN POWER PROJECT
F.D. FANS UNITS 1 THRU 4
PROJECT FILE 9255.62.3402

IP7_032586

TLT-BABCOCK, INC.
VARIABLE PITCH AXIAL FAN
PREDICTED PERFORMANCE

TYPE FAF 37.5/18.0-1
SPEED (RPM) - 880/700 NO. STAGES - 1
BLADE TYPE - N.A. NO. BLADES/STAGE - 16

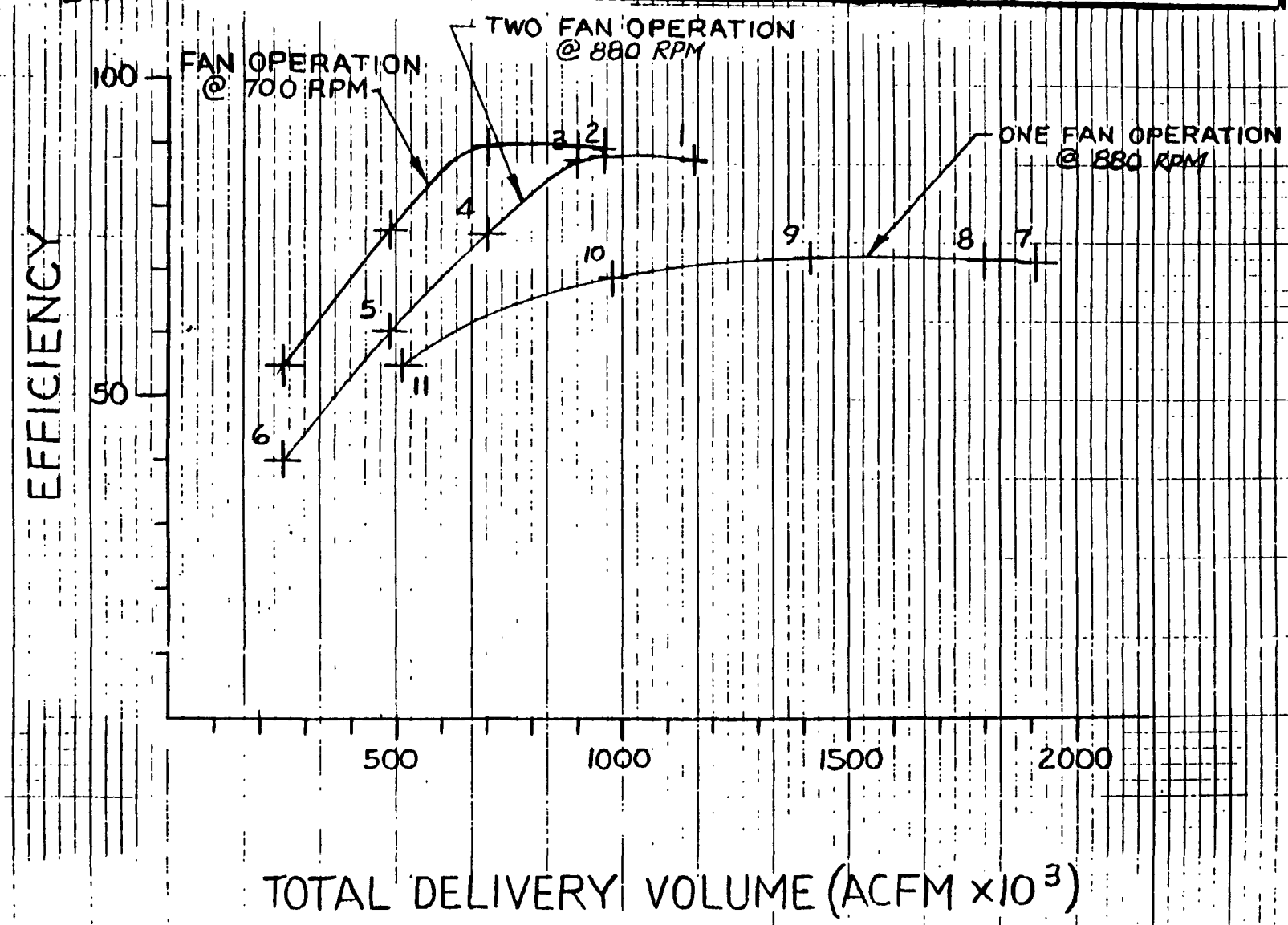

INTERMOUNTAIN POWER PROJECT
F.D. FANS UNITS 1 THRU 4
PROJECT FILE 9255.62.3402

BA-560
NOVEMBER 24, 1981
Page 5-4D

IP7_032587

TLT-BABCOCK, INC.
VARIABLE PITCH AXIAL FAN
PREDICTED PERFORMANCE

TYPE FAF 37.5/18.0-1
SPEED (RPM) - NO. STAGES - 1
BLADE TYPE - N.A. NO. BLADES/STAGE - 16

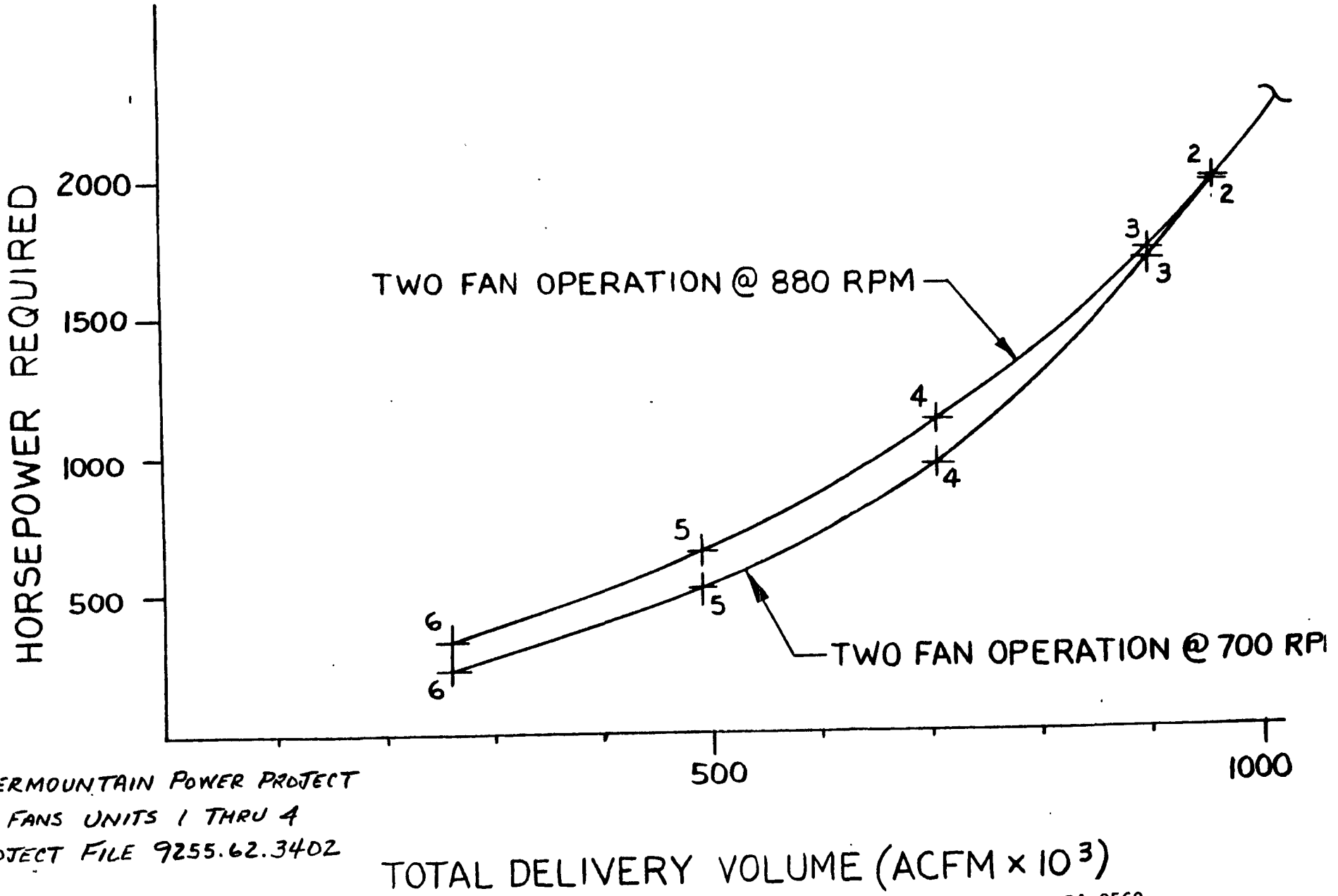

INTERMOUNTAIN POWER PROJECT
F.D. FANS UNITS 1 THRU 4
PROJECT FILE 9255.62.3402

BA-0560
Sept 16,1982
Page 5-4e

IP7_032588

ATTACHMENT 4

FD FAN PERFORMANCE

ATTACHMENT 5

PA FAN PERFORMANCE

OWDEN SIROCCO

rden Sirocco Inc.

Westinghouse Plaza, Suite 300
e Park, MA 02136
phone (617) 361-3700
(617) 361-0493

lowden Group Company

0481

August 5, 1992

To: Intermountain Power Service Corp.

Attention: Mr. Jon Christensen

From: Mr. Cecil Ireland

F A X M E S S A G E

Subject: I.P.P. - PA Fan Performance

Please find herewith revised curves for the PA fans at Intermountain Power, Delta, Utah. We apologize for our poor response in getting these curves out to you.

We have redrawn the curves, making separate ones for high and low speed.

The output of the top (90°) curve has been reduced slightly in line with other test data. The vane closure curves have been 'bunched' towards the top curve and this makes the angles at the test points agree closely with what was recorded during the tests. The power curves have been reconstructed to give efficiencies observed on other tests and also to give the as - tested efficiencies at Intermountain. Finally, we have labelled the curves in degrees from closed, which is in line with your nomenclature. These now are, in effect, customized curves for the Intermountain project.

Turning now to Westinghouse report WMC-EER-92-002, this redefines allowable motor powers as 5000 HP at 1194 RPM and 3200 HP at 897 RPM and it is our understanding that a 1.15 service factor on top of these values can be accommodated.

Two-Fan Low Speed Operation

We have indicated the nominal limit of 3,200 HP on the graph and it may be seen that any point on the curve is well within this power, without having to use any of the service factor.

One-Fan High Speed Operation

The tests showed the operating system to be to the right of the original specified system and we have shown this operating system as a dotted line. It is assumed, for purposes of discussion here, that higher fan loadings would lie on this line. Again we have shown lines for the power limitations. It may be seen that a duty of 375,000 CFM at 56.5 ins. SP can be reached at 5,000 BHP and a duty of 413,000 CFM at 69 ins. SP can be reached at 5,750 BHP.

We also include, for reference, the test results summary sheet originally faxed to you 12/10/91.

We hope the foregoing will allow you to proceed with your evaluation. If you have further questions regarding specific duties or conditions, or relative efficiencies, please let us know.

Regards,

Cecil Ireland

Cecil Ireland

CI/srm-1368E

cc: J. McLaughlin - Aurora, CO
L. Krieger - Aurora, CO
J. Srivastava - Hyde Park, MA
J. Sharer - Hyde Park, MA

Enclosures:

(Total pages faxed: 5

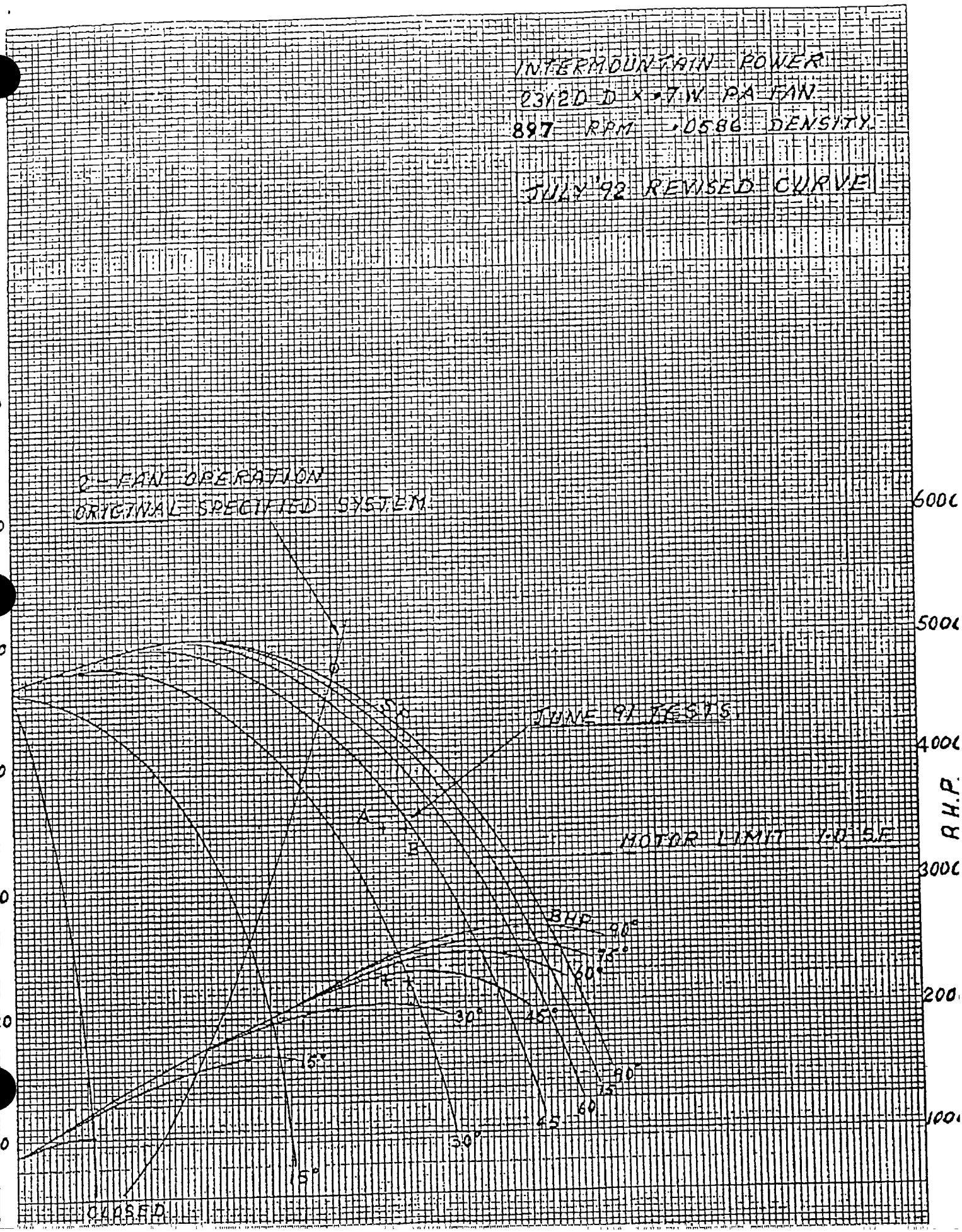
INTERMOUNTAIN POWER
23V2D D X 7W PA FAN
897 RPM .0586 DENSITY
JULY '92 REVISED CURVE
2-FAN OPERATION
ORIGINAL SPECIFIED SYSTEM
JUNE 91 TESTS
MOTOR LIMIT 1.0 S.F.
BHP
90°
75°
60°
45°
30°
15°
A
B
80
70
30
20
10
6000
5000
4000
3000
200
100
R.H.P.
CLOSED

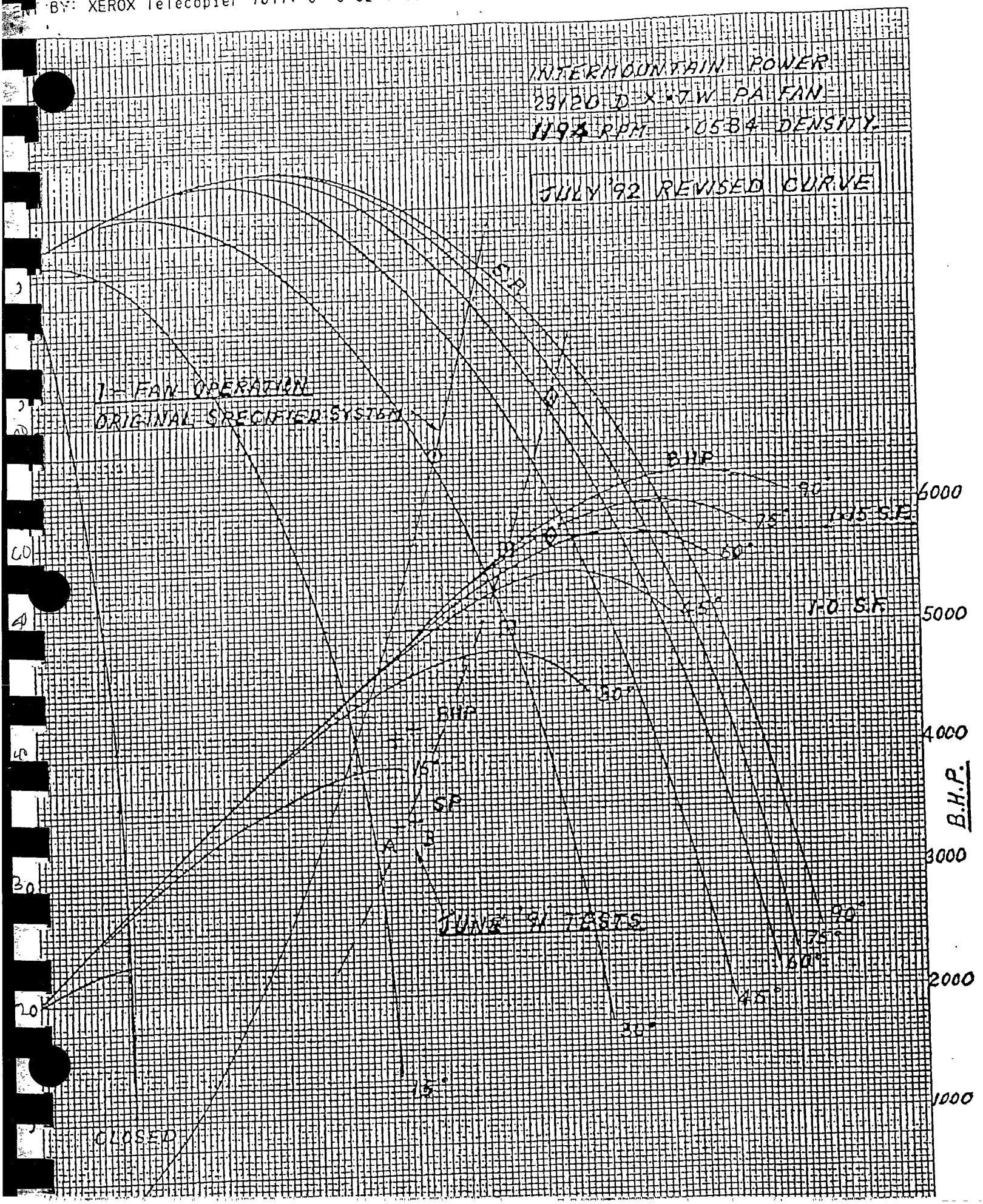
INTERMOUNTAIN POWER
23120 D X 17W PA FAN
1194 RPM .0584 DENSITY
JULY '92 REVISED CURVE
1-FAN OPERATION
ORIGINAL SPECIFIED SYSTEM
SP
BHP
90°
75°
60°
45°
30°
15°
1.85 S.F.
1.0 S.F.
JUNE '91 TESTS
CLOSED
B.H.P.
6000
5000
4000
3000
2000
1000
60
40
30
20

HOWDEN SIROCCO

Howden Sirocco Inc.

One Westinghouse Plaza, Suite 300
Hyde Park, MA 02136
Telephone (617) 361-3700
Fax (617) 361-0493

A Howden Group Company

July 24, 1991

Intermountain Power Service Corporation
Route 1 Box 864
Delta, Utah 84624

Attention: Mr. Jon Christensen

Subject: I.P.P. - P.A. Fan Performance

Dear Jon:

Further to our update of June 28, 1991, we give below the findings from our analysis of the problems assocated with one - fan operation at the Intermountain plant and we discuss the options available to overcome these problems.

There are three main factors causing the problem.

Firstly, as already stated, the tests have shown the fan efficiency to be lower than expected, especially at the high speed operating point. We now know that this has happened because some of the lower load regions of the basic selection data were incorrect.

Secondly, there is no margin on motor power. The quoted test block BHP at 897 RPM is 2217 while the motor is rated at 2000 HP and the 5% service factor raises this to only 2100 HP. At the high speed duty the quoted BHP is 3989 with a motor rating of 4000.

The combination of lower efficiency and motor power limitation creates a 'Catch 22' situation. The vane setting has to be reduced to keep the amps down and this reduces fan efficiency still further. The present fans are capable of developing much more output at both speeds and of doing it more efficiently, if only the vanes could be opened further.

Another factor which is adding to the problem is that the actual operating systems for one and two - fan operation are to the right hand side of the original specified systems. Depending on the actual volume-pressure required, this can add from zero to 4% to power at low speed and zero to about 6% at high speed. It seems that the possibility of a variance in operating system, particularly under one - fan operation, was not taken into account when sizing the motors.

There appears to be only two options available to overcome the problem.

1. Replacing the present wheels and inlets.

   We have tried a considerable number of wheel selections and find that none of these will develop the original MCR duty of 252000 CFM at 47 ins WG and do it within the present motor limit of 2100 BHP.

   This prompted us to look at other possibilities. Our first idea was that, in the light of operating experience, the opportunity should be taken to re-specify the load points. We have, therefore, chosen revised load points as follows. These points take into account the fact that the systems are futher to the right and also we have reduced the pressures to keep within motor powers. Your earlier tests indicate that 100% MCR operation required about 37 ins. WG (at graph conditions). We have marked these new points on the test results graph for comparison.

   MCR: 275,000 CFM @41 Ins. SP.
   High Speed: 350,000 CFM @56 Ins. SP.

   However, even this course has problems. We can certainly select 2 or 3 different wheels which will achieve these duties within the present motor power. Unfortunately, for the wheel sizes required, the present housing is not sufficiently close to what it should be, which creates doubt as to whether this arrangement would perform satisfactorily.

   This leaves us with one other suggestion, which is to select the fans for the high speed duty and to run at high speed for both modes. This means we could cope with a high speed duty of 350000 CFM at 57 to 58 ins. WG and stay well within the 4000 power limit. The MCR operation would be achieved by closing the vanes. There would no longer be a power or output limitation at MCR and our selections show that the efficiency at this vane setting would be about the same as is presently achieved at this load. The wheel diameter would be much the same as at present and thus the housing will be close to what is required.

2) Replace the motors.

   The other option for solving the problem is obviously to modify or replace the motors. This option would be more expensive and a longer lead time would be associated with it.

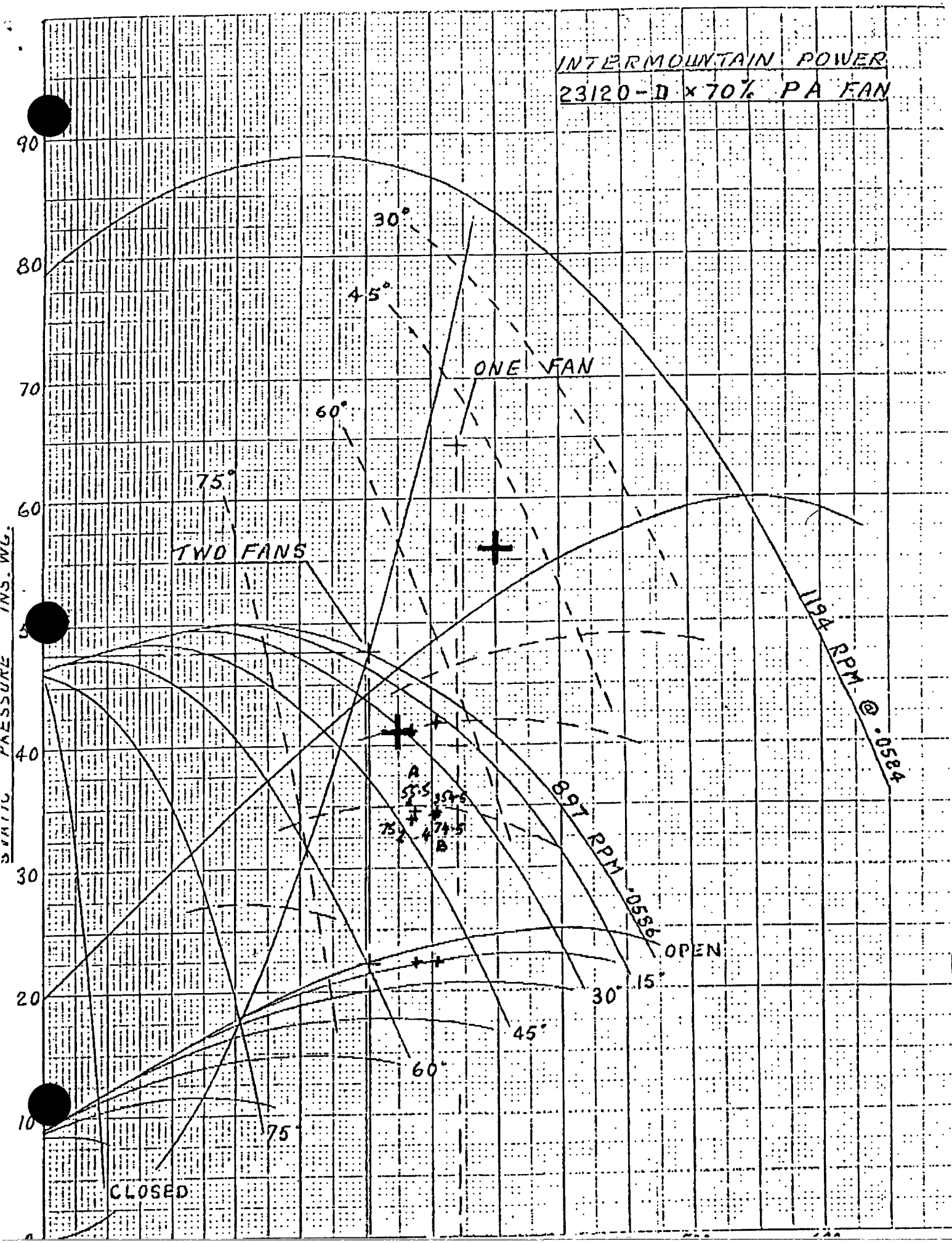
INTERMOUNTAIN POWER
23120-D × 70% PA FAN
STATIC PRESSURE INS. WG.
90
80
70
60
50
40
30
20
10
0
30°
45°
60°
75°
ONE FAN
TWO FANS
1194 RPM @ .0584
897 RPM .0586
OPEN
15°
30°
45°
60°
75°
CLOSED
A
B

IP7_032597

We hope the foregoing will be helpful in deciding the most viable course of action and we await your comments with regard to the new duty points. If the high speed option as discussed above is acceptable, we would be able to fine tune the selection and work up budget prices and delivery information within 5 or 6 days.

Sincerely,

Wm C. Ireland

W. C. Ireland
Senior Development Engineer

WCI/srm-0840E

cc: Mr. L. W. Krieger - Aurora, CO
Mr. R. E Mahoney
Mr. J. P. Srivastava
Mr. R. G. Eddy

ATTACHMENT 6

EXISTING BURNER GENERAL LAYOUT

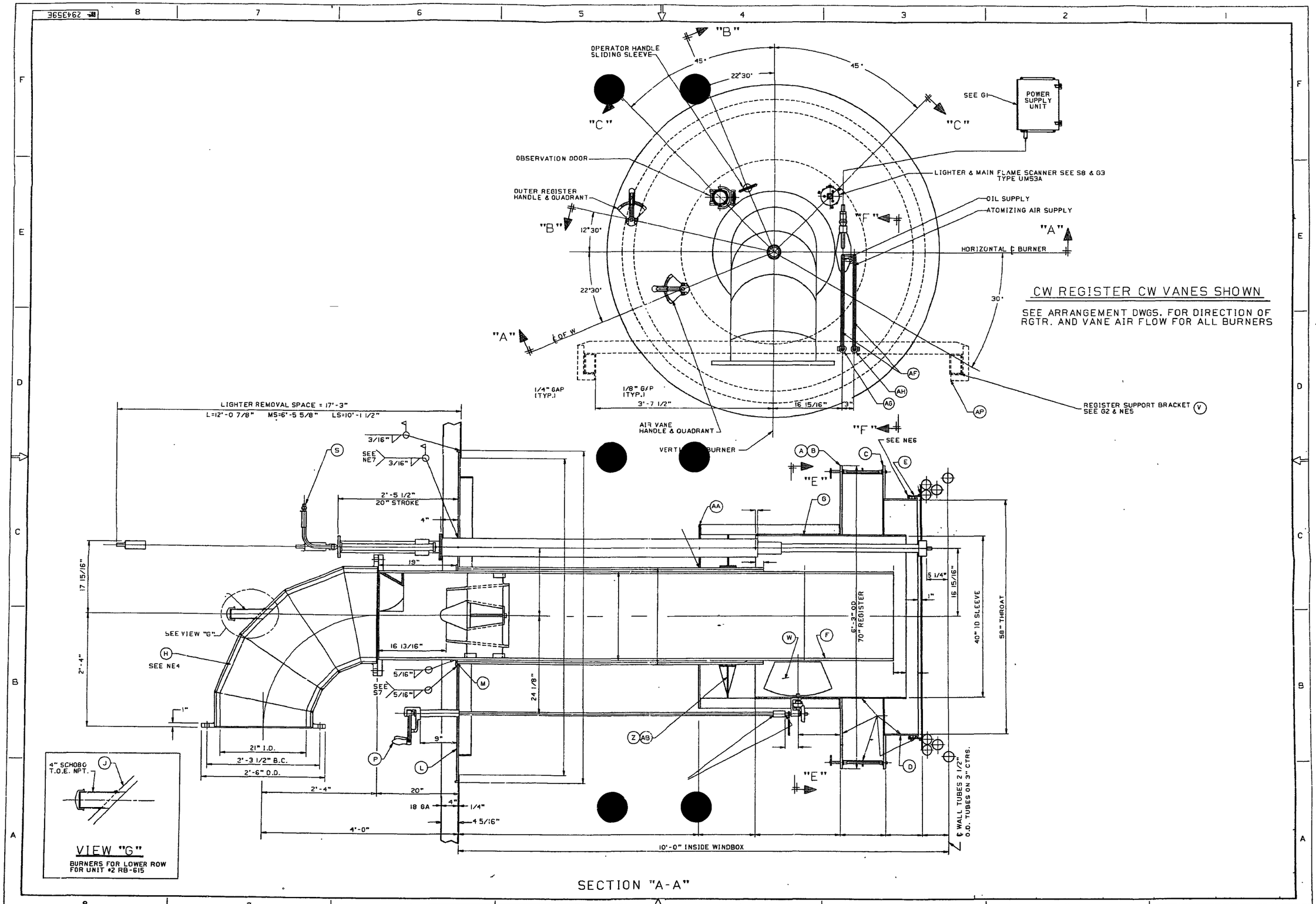
OPERATOR HANDLE SLIDING SLEEVE
"B"
45°
22°30'
45°
"C"
"C"
SEE G1
POWER SUPPLY UNIT
OBSERVATION DOOR
LIGHTER & MAIN FLAME SCANNER SEE S8 & G3 TYPE UM53A
OUTER REGISTER HANDLE & QUADRANT
OIL SUPPLY
ATOMIZING AIR SUPPLY
"B"
12°30'
"F"
"A"
HORIZONTAL ℄ BURNER
22°30'
30°
CW REGISTER CW VANES SHOWN
SEE ARRANGEMENT DWGS. FOR DIRECTION OF RGTR. AND VANE AIR FLOW FOR ALL BURNERS
"A"
℄ OF W
1/4" GAP (TYP.)
1/8" G/P (TYP.)
3'-7 1/2"
16 15/16"
3"
AF
AH
AG
AP
REGISTER SUPPORT BRACKET SEE G2 & NE5 V
AIR VANE HANDLE & QUADRANT
VERTI BURNER
"F"
SEE NE6
LIGHTER REMOVAL SPACE = 17'-3"
L=12'-0 7/8" MS=6'-5 5/8" LS=10'-1 1/2"
3/16"
SEE NE7
3/16"
S
A B
C
E
"E"
2'-5 1/2"
20" STROKE
4"
AA
G
19"
17 15/16"
5 1/4"
16 15/16"
1"
6'-3" OD
70" REGISTER
40" ID SLEEVE
58" THROAT
SEE VIEW "G"
H
SEE NE4
16 13/16"
W
F
2'-4"
5/16"
M
SEE S7
5/16"
24 1/8"
1"
21" I.D.
2'-3 1/2" B.C.
2'-6" O.D.
9"
Z AB
P
L
D
"E"
4" SCHO80 T.O.E. NPT.
J
VIEW "G"
BURNERS FOR LOWER ROW FOR UNIT #2 RB-615
2'-4"
20"
18 GA
4"
1/4"
4 5/16"
4'-0"
10'-0" INSIDE WINDBOX
℄ WALL TUBES 2 1/2" O.D. TUBES ON 3" CTRS.
SECTION "A-A"

IP7_032600

ATTACHMENT 7

SECONDARY AIR DUCT AND WINDBOX DRAWINGS

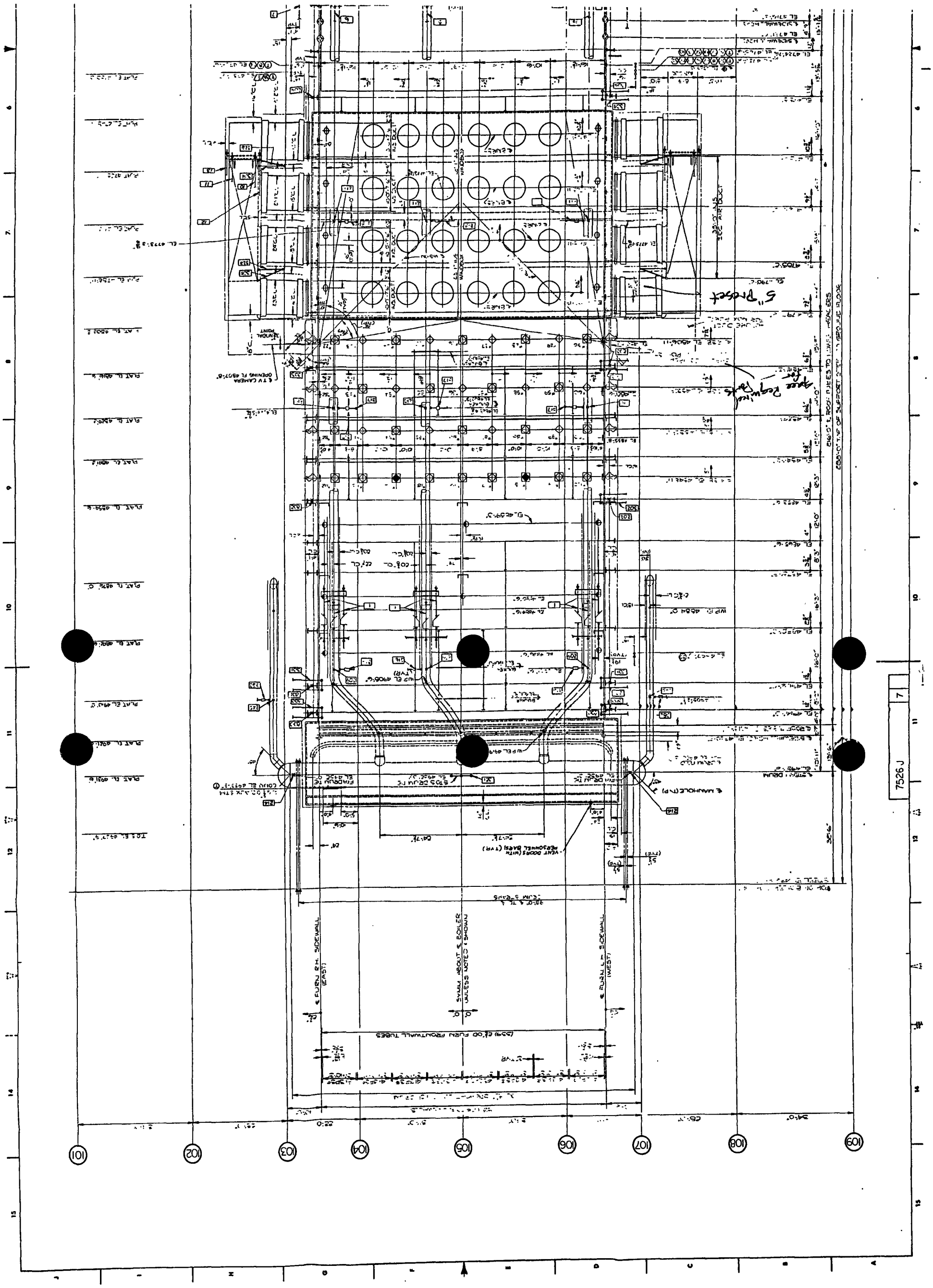
7526 J
7
5" Pocket
Space Required
101
102
103
104
105
106
107
108
109

IP7_032602

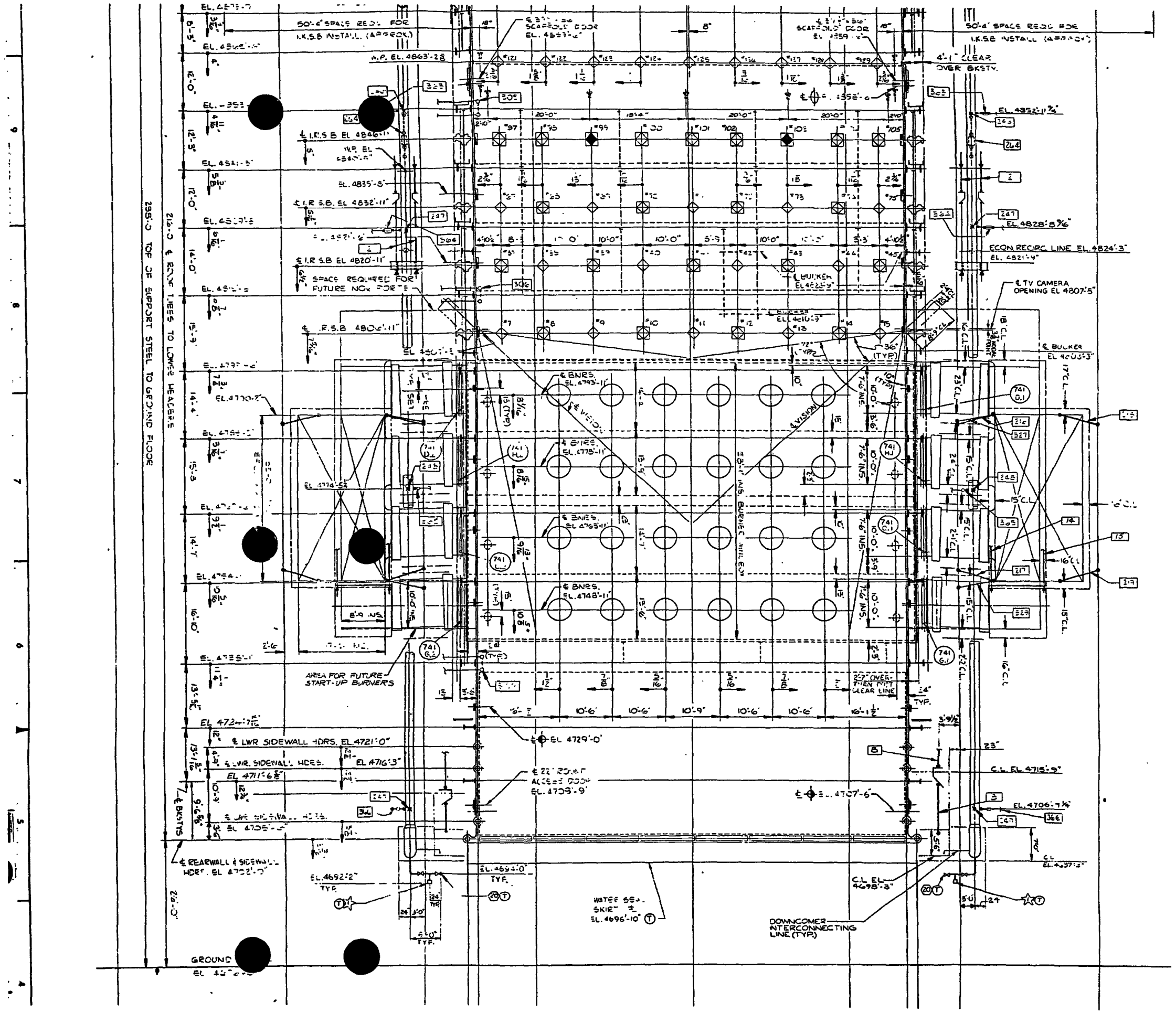

62.3481.05-10015

IP7_032603

INTERMOUNTAIN POWER PROJECT
STEAM GENERATOR UNITS 1,2,3 & 4
PROJECT FILE 9255.62.3401
IPA CONTRACT 2010N
B&W RADIANT BOILER
SECTIONAL SIDE VIEW
334-0615
334-0616
334-0617
334-0614
UNIT 1
7530J
B&W 9255.62.3401.05-10018
REVISIONS
OUTSIDE
GROUND FLOOR EL 4700'-0"
288'-0" TOP OF SUPPORT STEEL TO GROUND FLOOR
246'-0" ROOF TUBES TO ℄ LOWER HEADERS
FOR SYMBOL NOMENCLATURE & NOTES SEE DWG. 7530J.

IP7_032604

FOR CONTINUATION SEE DWG. 291243E
℄ FURN. (NORTH) REAR WALL
℄ FURN. (SOUTH) FRONT WALL
℄ FURNACE
℄ FURN. (WEST) L'H SIDEWALL
℄ FURN. (EAST) R'H SIDEWALL
(3991)-28" O.D. FURN. FRONT WALL TUBES
℄ TO ℄ FURN. SIDEWALL
℄ CTR. SHELL DCMR. RH SIDE OF BLR ONLY
SUPPLY TUBE CLEARANCE LINES
NOTE:
1 FIRST DIGIT OF COLUMN ROW DESIGNATION CORRESPONDS WITH UNIT NUMBER.
EXAMPLE:
UNIT 1 UNIT 2 UNIT 3 UNIT 4
101 201 301 401
2. FOR SUPPLY TUBE SUPPORT INFORMATION SEE LAYOUT DWGS 7544J & 7545J.
334-0615
334-0616
334-0617
7534 J
7
BEV 9255.63.3401.DS-10022

IP7_032605

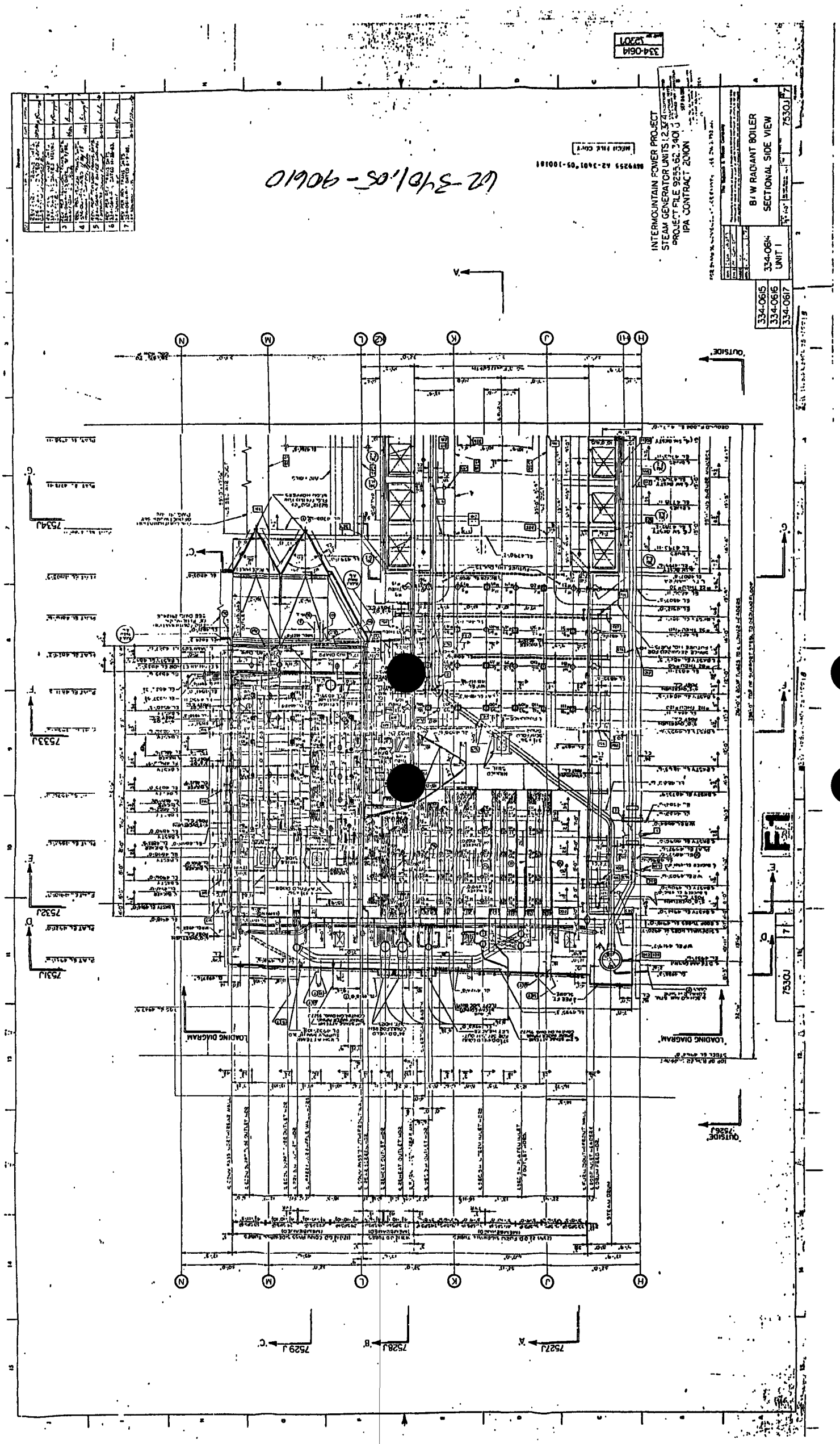
INTERMOUNTAIN POWER PROJECT
STEAM GENERATOR UNITS 1,2,3,4
PROJECT FILE 9253.62.3401
IPA CONTRACT 2ONON
B & W RADIANT BOILER
SECTIONAL SIDE VIEW
334-0614
UNIT 1
334-0615
334-0616
334-0617
7530J
7531J
7532J
7533J
7534J
7526J
7527J
7528J
7529J
LOADING DIAGRAM
OUTSIDE

IP7_032606

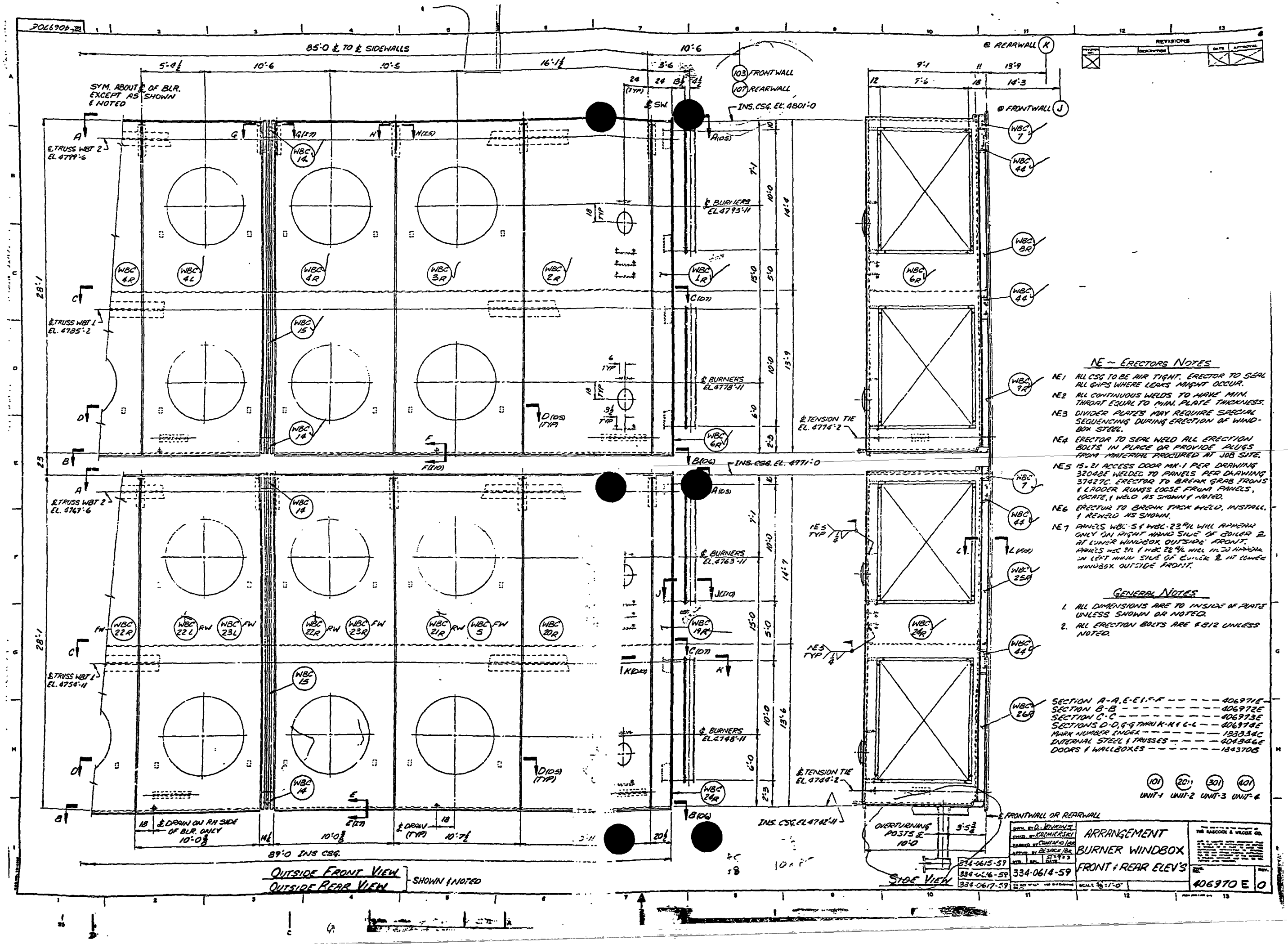
406970D
85'-0 ℄ TO ℄ SIDEWALLS
SYM. ABOUT ℄ OF BLR. EXCEPT AS SHOWN & NOTED
℄ TRUSS WBT 2 EL. 4799'-6
℄ TRUSS WBT 2 EL. 4785'-2
℄ TRUSS WBT 2 EL. 4767'-6
℄ TRUSS WBT 2 EL. 4754'-11
103 FRONT WALL
107 REARWALL
INS. CSG. EL. 4801'-0
INS. CSG. EL. 4771'-0
INS. CSG. EL. 4742'-11
℄ BURNERS EL. 4793'-11
℄ BURNERS EL. 4778'-11
℄ BURNERS EL. 4763'-11
℄ BURNERS EL. 4748'-11
℄ TENSION TIE EL. 4776'-2
℄ TENSION TIE EL. 4744'-2
@ REARWALL K
@ FRONTWALL J
℄ DRAW ON RH SIDE OF BLR. ONLY
℄ DRAW (TYP)
89'-0 INS CSG.
OVERTURNING POSTS ℄ 10'-0
℄ FRONTWALL OR REARWALL
OUTSIDE FRONT VIEW
OUTSIDE REAR VIEW
SHOWN & NOTED
SIDE VIEW
REVISIONS
NE ~ ERECTORS NOTES
NE1 ALL CSG TO BE AIR TIGHT. ERECTOR TO SEAL ALL GAPS WHERE LEAKS MIGHT OCCUR.
NE2 ALL CONTINUOUS WELDS TO HAVE MIN. THROAT EQUAL TO MIN. PLATE THICKNESS.
NE3 DIVIDER PLATES MAY REQUIRE SPECIAL SEQUENCING DURING ERECTION OF WINDBOX STEEL.
NE4 ERECTOR TO SEAL WELD ALL ERECTION BOLTS IN PLACE OR PROVIDE PLUGS FROM MATERIAL PROCURED AT JOB SITE.
NE5 1S. 21 ACCESS DOOR MK-1 PER DRAWING 320488 WELDED TO PANELS PER DRAWING 37427C. ERECTOR TO BREAK GRAB IRONS & LADDER RUNGS LOOSE FROM PANELS, LOCATE, & WELD AS SHOWN & NOTED.
NE6 ERECTOR TO BREAK TACK WELD, INSTALL, & REWELD AS SHOWN.
NE7 PANELS WBC-5 & WBC-23 R/L WILL APPEAR ONLY ON RIGHT HAND SIDE OF BOILER 2 AT LOWER WINDBOX OUTSIDE FRONT. PANELS WBC 21L & WBC 22 R/L WILL APPEAR ON LEFT HAND SIDE OF BOILER 2 AT LOWER WINDBOX OUTSIDE FRONT.
GENERAL NOTES
1. ALL DIMENSIONS ARE TO INSIDE OF PLATE UNLESS SHOWN OR NOTED.
2. ALL ERECTION BOLTS ARE ⅝ 812 UNLESS NOTED.
SECTION A-A, E-E, F-F — 406971E
SECTION B-B — 406972E
SECTION C-C — 406973E
SECTIONS D-D, G-G THRU K-K & L-L — 406974E
MARK NUMBER INDEX — 133834C
INTERNAL STEEL & TRUSSES — 404846E
DOORS & WALLBOXES — 184370B
101 UNIT-1
201 UNIT-2
301 UNIT-3
401 UNIT-4
DWN. BY D. JENKINS
CHKD. BY R. KRZMIERSKI
ARRANGEMENT
BURNER WINDBOX
FRONT & REAR ELEV'S
334-0615-59
334-0616-59
334-0617-59
334-0614-59
SCALE 3/8" = 1'-0"
THE BABCOCK & WILCOX CO.
406970 E
0

IP7_032607

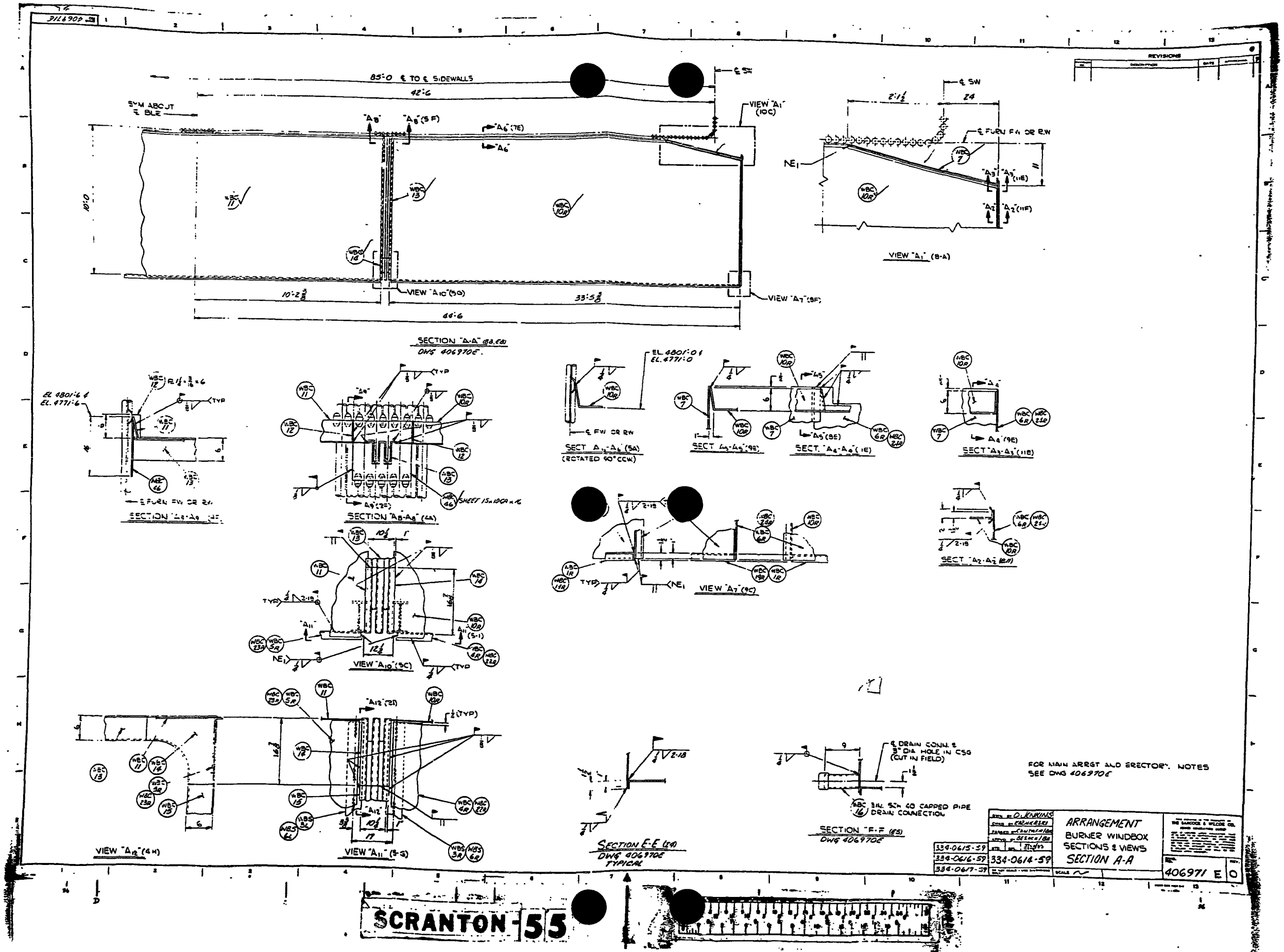
85'-0 ℄ TO ℄ SIDEWALLS
42'-6
SYM ABOUT ℄ BLE
VIEW "A1" (10C)
VIEW "A10" (5G)
VIEW "A7" (5F)
10'-2 3/8
33'-5 5/8
44'-6
SECTION "A-A" (8.E.G)
DWG 406970E.
VIEW "A1" (8-A)
SECTION "A8-A8" (4A)
SECT "A11-A6" (5A)
(ROTATED 90° CCW)
SECT "A4-A5" (9E)
SECT "A4-A6" (1E)
SECT "A3-A3" (11B)
SECT "A2-A2" (11F)
VIEW "A7" (9C)
VIEW "A10" (5C)
VIEW "A12" (4H)
VIEW "A11" (5-G)
SECTION E-E (2A)
DWG 406970E
TYPICAL
SECTION "F-F" (6S)
DWG 406970E
℄ DRAIN CONN. & 3" DIA HOLE IN CSG (CUT IN FIELD)
3 IN. SCH 40 CAPPED PIPE DRAIN CONNECTION
FOR MAIN ARRGT AND ERECTOR'S NOTES SEE DWG 406970E
REVISIONS
ARRANGEMENT
BURNER WINDBOX
SECTIONS & VIEWS
SECTION A-A
334-0615-59
334-0616-59
334-0617-59
334-0614-59
406971 E 0
SCRANTON 55

IP7_032608

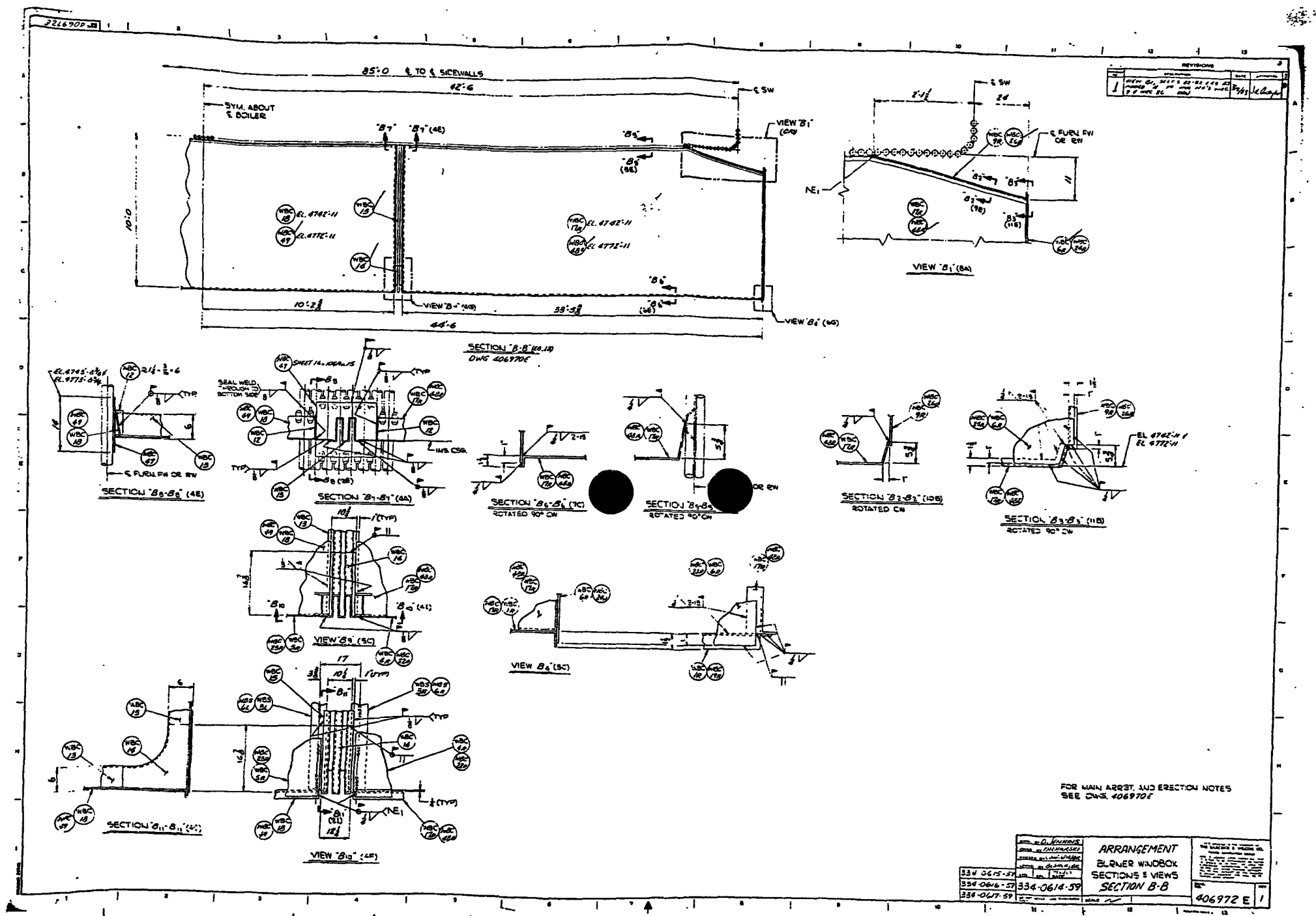

SCRANTON-93

IP7_032609

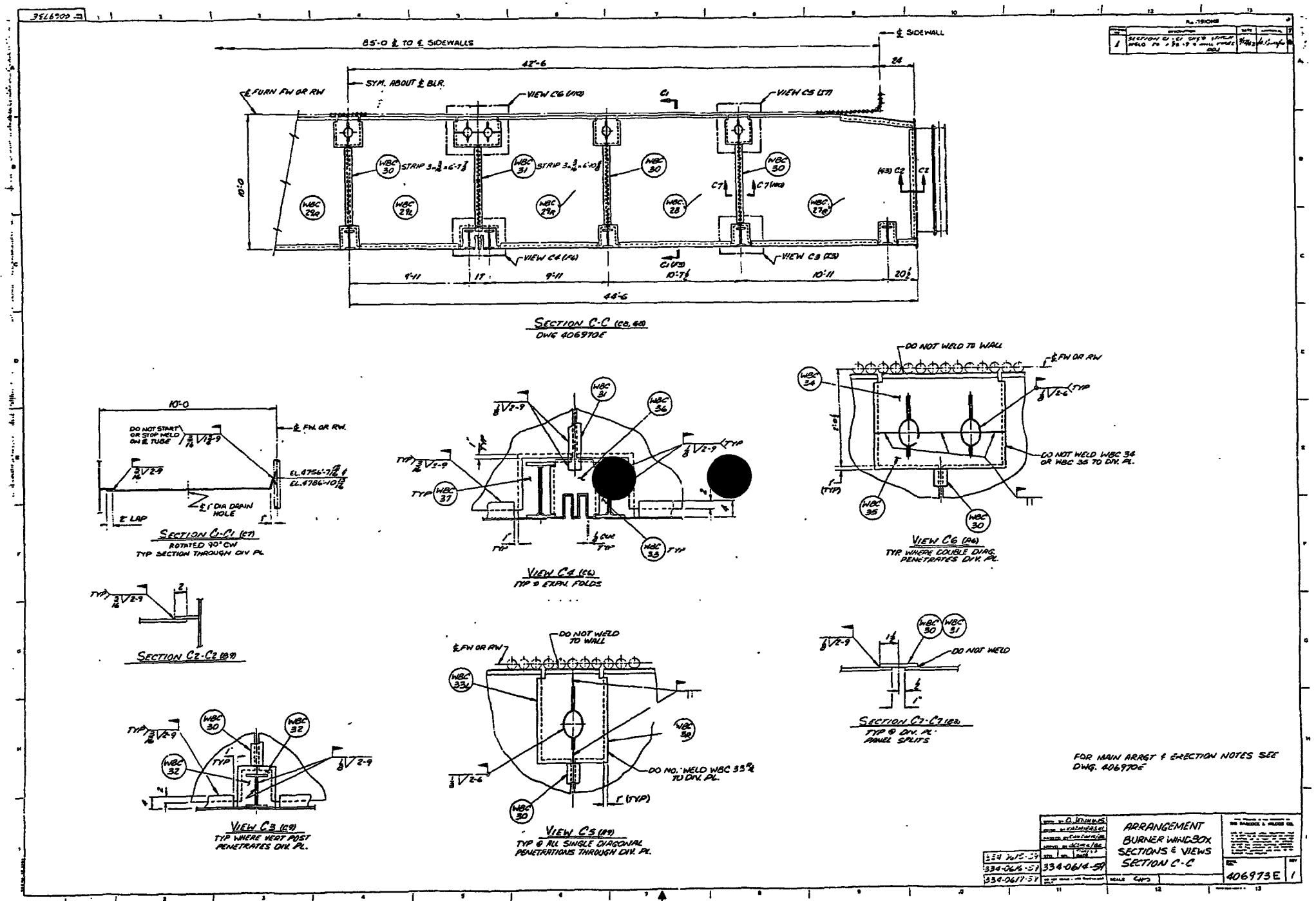

SCRANTON 93

IP7_032610

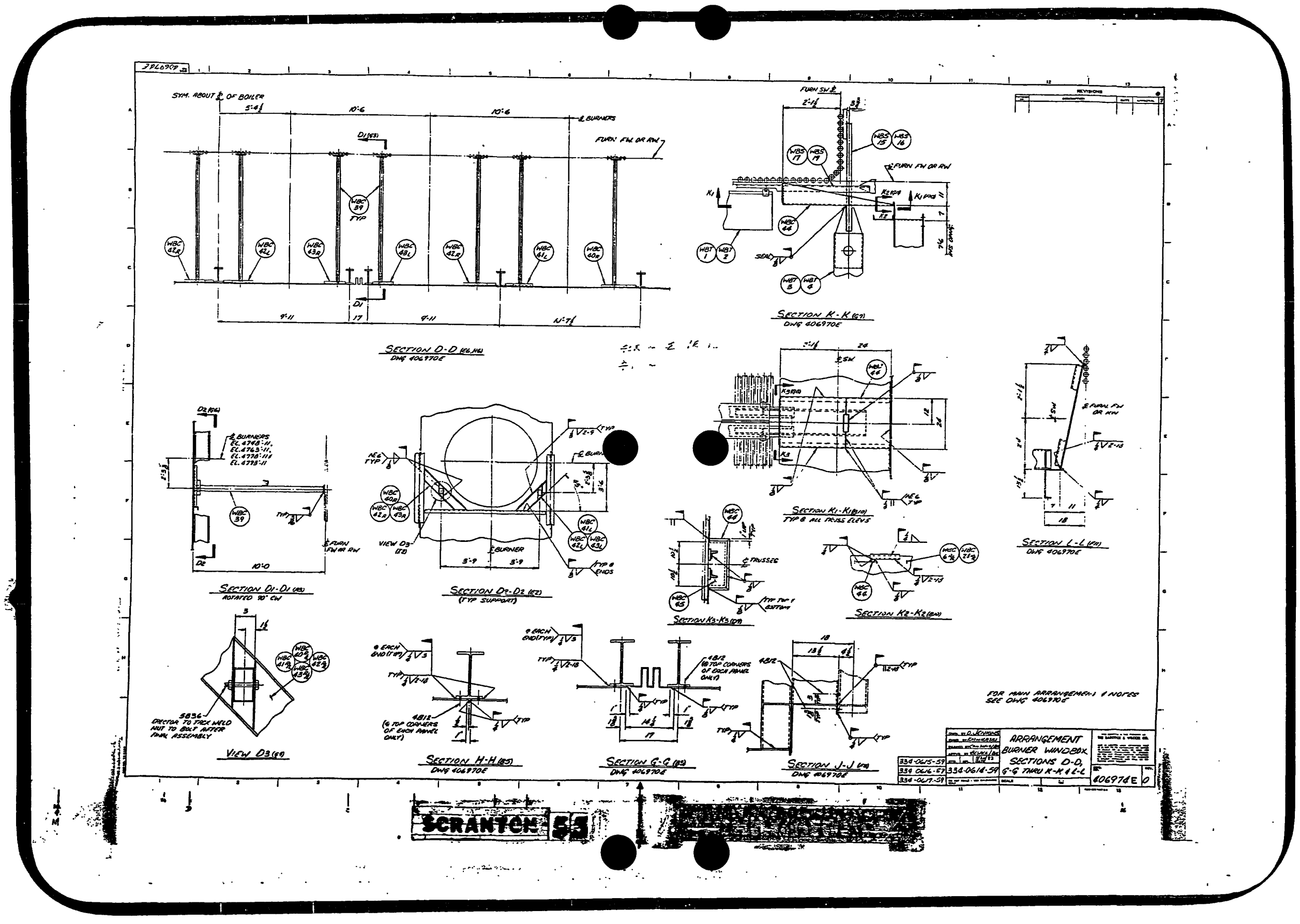
SYM. ABOUT ℄ OF BOILER
℄ BURNERS
FURN. FW OR RW
SECTION D-D
DWG 406970E
SECTION K-K
DWG 406970E
SECTION K1-K1
TYP @ ALL TRUSS ELEVS
SECTION L-L
DWG 406970E
SECTION D1-D1
ROTATED 90° CW
SECTION D2-D2
(TYP SUPPORT)
VIEW D3
SECTION H-H
DWG 406970E
SECTION G-G
DWG 406970E
SECTION J-J
DWG 406970E
SECTION K3-K3
SECTION K2-K2
FOR MAIN ARRANGEMENT & NOTES SEE DWG 406970E
ARRANGEMENT
BURNER WINDBOX
SECTIONS D-D, G-G THRU K-K & L-L
334-0615-59
334-0616-59
334-0617-59
406971E
0
SCRANTON 55

IP7_032611

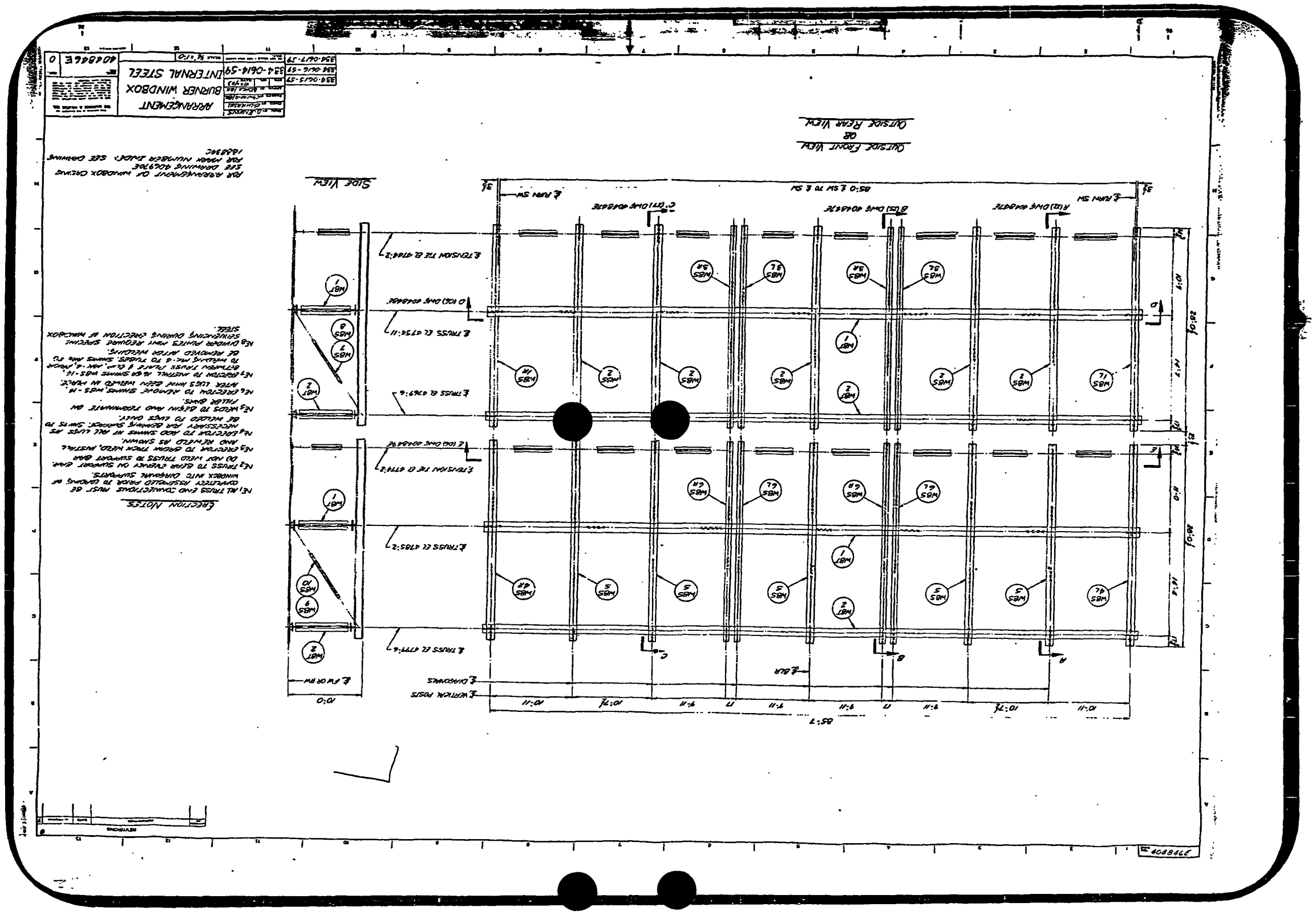
Outside Rear View
Outside Front View
OR
Side View
Section Notes
ARRANGEMENT
BURNER WINDBOX
INTERNAL STEEL
40488GE

IP7_032612

INTERMOUNTAIN POWER SERVICE CORPORATION

ADDENDUM

TO

SPECIFICATIONS 45606 - NOx BURNERS

The following nine (9) pages should be considered additional information and incorporated as Attachment No. 8 to Bidding Documents and Specifications 45606:

As Fired Coal Sample Analyses - IPSC Fuels Lab

850 West Brush Wellman Road, Delta, Utah 84624 / Telephone: (435) 864-4414 / FAX: (435) 864-6670 / Fed. I.D. #87-0388573

ATTACHMENT 8

AS FIRED COAL SAMPLE ANALYSES - IPSC FUELS LAB

AS FIRED COAL SAMPLE ANALYSES - IPSC FUELS LAB

Lab #	Date	Dry Ash%	Dry S%	Dry C%	Dry H%	Dry N%	Dry O%	Dry Btu/lb	MAF BTU
31303	10/1/2002	12.78	0.75	70.21	4.89	1.54	9.83	12544	14383
31307	10/2/2002	10.46	0.66	71.53	4.91	1.55	10.89	12784	14278
31317	10/3/2002	11.49	0.67	70.91	4.78	1.52	10.62	12659	14303
31325	10/4/2002	10.13	0.69	72.00	4.87	1.57	10.74	12897	14350
31326	10/5/2002	9.99	0.70	72.05	4.91	1.60	10.74	12945	14382
31329	10/6/2002	10.11	0.65	71.72	4.83	1.59	11.09	12798	14238
31335	10/7/2002	9.41	0.74	72.49	4.93	1.57	10.85	13000	14351
31339	10/8/2002	8.36	0.86	73.76	5.00	1.61	10.42	13289	14502
31345	10/9/2002	9.11	0.86	73.18	5.00	1.63	10.22	13187	14508
31353	10/10/2002	9.72	0.77	72.72	4.93	1.65	10.20	13127	14540
31358	10/11/2002	10.72	0.66	71.96	4.71	1.59	10.37	12809	14347
31361	10/12/2002	10.17	0.80	72.15	4.78	1.63	10.47	12915	14377
31364	10/13/2002	10.08	0.72	72.08	4.73	1.55	10.84	12912	14360
31372	10/14/2002	9.85	0.77	72.27	4.84	1.58	10.69	12961	14377
31375	10/15/2002	10.21	0.76	72.21	4.99	1.60	10.22	12895	14361
31377	10/16/2002	10.58	0.76	71.87	4.90	1.61	10.27	12900	14426
31382	10/17/2002	9.76	0.70	72.51	4.93	1.64	10.46	13021	14429
31389	10/18/2002	9.28	0.72	73.69	5.18	1.61	9.52	13156	14502
31392	10/19/2002	9.43	0.70	72.75	5.05	1.58	10.49	13088	14451
31395	10/20/2002	9.19	0.67	73.05	5.12	1.58	10.38	13042	14362
31398	10/21/2002	10.06	0.67	72.17	4.98	1.56	10.57	12937	14385
31408	10/22/2002	10.27	0.61	71.62	4.72	1.51	11.27	12797	14262
31412	10/23/2002	11.65	0.61	70.35	4.76	1.50	11.13	12597	14258
31417	10/24/2002	9.96	0.61	71.89	4.73	1.36	11.45	12859	14282
31422	10/25/2002	10.29	0.69	72.04	4.74	1.57	10.67	12701	14158
31426	10/26/2002	9.52	0.80	73.02	4.83	1.62	10.21	13109	14488
31429	10/27/2002	9.42	0.78	72.60	5.11	1.54	10.56	13061	14419
31435	10/28/2002	10.30	0.70	71.80	5.01	1.47	10.71	12899	14379
31437	10/29/2002	9.66	0.75	72.46	4.78	1.51	10.85	12781	14147

IP7_032615

AS FIRED COAL SAMPLE ANALYSES - IPSC FUELS LAB

Lab #	Date	Time	Moist%	Ash%	S%	Btu/lb	Res Mois%	C%	H%	N%	O%
31303	10/1/2002	17:00	7.39	11.84	0.69	11617	2.08	65.02	4.53	1.43	9.10
31307	10/2/2002	17:00	9.28	9.49	0.60	11598	2.17	64.89	4.45	1.41	9.88
31317	10/3/2002	17:00	9.07	10.45	0.61	11511	1.94	64.48	4.35	1.38	9.66
31325	10/4/2002	17:00	9.15	9.20	0.63	11717	2.19	65.41	4.42	1.43	9.76
31326	10/5/2002	17:00	9.00	9.09	0.64	11780	1.73	65.57	4.47	1.46	9.77
31329	10/6/2002	17:00	7.70	9.33	0.60	11813	1.97	66.20	4.46	1.47	10.24
31335	10/7/2002	17:25	7.69	8.69	0.68	12000	1.93	66.92	4.55	1.45	10.02
31339	10/8/2002	17:25	6.72	7.80	0.80	12396	1.68	68.80	4.66	1.50	9.72
31345	10/9/2002	17:00	6.77	8.49	0.80	12294	1.66	68.23	4.66	1.52	9.53
31353	10/10/2002	17:00	6.90	9.05	0.72	12221	1.43	67.70	4.59	1.54	9.50
31358	10/11/2002	17:00	7.35	9.93	0.61	11868	1.35	66.67	4.36	1.47	9.61
31361	10/12/2002	17:00	6.96	9.46	0.74	12016	1.25	67.13	4.45	1.52	9.74
31364	10/13/2002	17:00	7.86	9.29	0.66	11897	1.55	66.41	4.36	1.43	9.99
31372	10/14/2002	17:00	7.60	9.10	0.71	11976	1.59	66.78	4.47	1.46	9.88
31375	10/15/2002	17:00	7.04	9.49	0.71	11987	1.75	67.13	4.64	1.49	9.50
31377	10/16/2002	17:15	6.82	9.86	0.71	12020	1.33	66.97	4.57	1.50	9.57
31382	10/17/2002	17:00	7.15	9.06	0.65	12090	1.44	67.33	4.58	1.52	9.71
31389	10/18/2002	17:00	7.22	8.61	0.67	12206	1.30	68.37	4.81	1.49	8.83
31392	10/19/2002	17:00	6.80	8.79	0.65	12198	1.33	67.80	4.71	1.47	9.78
31395	10/20/2002	17:00	7.12	8.54	0.62	12113	1.55	67.85	4.76	1.47	9.64
31398	10/21/2002	17:00	6.78	9.38	0.62	12060	1.50	67.28	4.64	1.45	9.85
31408	10/22/2002	17:00	7.19	9.53	0.57	11877	2.04	66.47	4.38	1.40	10.46
31412	10/23/2002	17:00	7.54	10.77	0.56	11647	1.74	65.05	4.40	1.39	10.29
31417	10/24/2002	17:00	8.17	9.15	0.56	11808	2.37	66.02	4.34	1.25	10.51
31422	10/25/2002	17:00	7.19	9.55	0.64	11788	1.44	66.86	4.40	1.46	9.90
31426	10/26/2002	17:00	6.72	8.88	0.75	12228	1.57	68.11	4.51	1.51	9.52
31429	10/27/2002	17:00	7.64	8.70	0.72	12063	1.55	67.05	4.72	1.42	9.75
31435	10/28/2002	16:30	7.75	9.50	0.65	11899	1.73	66.24	4.62	1.36	9.88
31437	10/29/2002	17:00	7.72	8.91	0.69	11794	1.42	66.87	4.41	1.39	10.01

IP7_032616

Intermountain Generating Station
Pulverizer Fineness Results

Test#							
Date Tested	7/7/2003	7/7/2003	7/9/2003	7/9/2003	7/2/2003	7/7/2003	7/8/2003
Unit	1	1	1	1	1	1	1
Mill	A	B	C	D	E	F	G
% Feeder Speed	80	80	80	80	80	80	80
Actual % Through 200 Mesh	73.90	68.20	70.60	68.80	75.40	74.00	65.40
Expected % Through 200 Mesh	62.26	64.41	68.22	67.12	62.74	62.67	66.26
HGI	44.0	45.7	48.1	47.4	44.8	44.0	46.5
Total Moisture	7.79	8.66	8.16	8.44	9.15	7.36	8.20
Air Dry Loss	6.46	7.30	6.89	7.07	7.59	5.92	6.44
As Received Btu	11,867	11,782	11,932	11,969	11,519	12,118	11,823

Test Period Average Data

Test							
Unit Pulv	1/A	1/B	1/C	1/D	1/E	1/F	1/G
% Feeder Speed	79.71	83.08	81.37	81.74	80.32	80.51	80.52
Actual Pulv Coal Flow (tph)	54.17	53.60	55.33	55.56	54.62	54.73	54.75
PA Damper Position (%)	75.51	82.06	98.98	77.43	87.74	75.59	74.52
PA Flow (%)	92.14	92.16	92.42	94.29	91.38	91.63	92.24
PA Inlet Damper Temp (DEGF)	300.77	322.53	325.48	310.52	316.49	322.19	325.57
PA D/P (INWC)	16.94	18.12	25.16	19.80	20.30	17.77	12.51
Disch Temp (DEGF)	150.00	151.07	150.92	150.03	150.94	151.02	150.95
Pulv Motor (amps)	68.48	58.57	67.91	61.27	79.34	64.04	51.72
PA Mass Flowrate (lb/min)	3709	3639	3624	3663	3617	3596	3677
air to fuel ratio	2.02	1.93	1.98	2.01	1.98	1.99	2.00
Pulv hrs since 30K Overhaul	12395	15858	6315	2481	1884	13380	11708
Pulv H amp swing	9.24	6.16	7.96	6.78	10.63	8.71	5.62
PA Duct Pressure (INWC)	47.82	48.27	46.30	46.22	43.70	48.24	47.13
Hydraulic Skid Press FeedBack	2297	2219	392	2209	2159	2383	2046
Hydraulic Skid Press Set Pt	2388	2400	2399	2400	2388	2398	2397

Test '							
Mill	A	B	C	D	E	F	G
* Contract % Through 200 Mesh @ **95 % FDR SPEED**	70	70	70	70	70	70	70
HGI Correction	0.880	0.914	0.962	0.948	0.896	0.880	0.930
Moisture Correction	0.975	0.967	0.971	0.969	0.964	0.981	0.976
Fineness Correction	1.118	1.086	1.028	1.045	1.111	1.112	1.058
Expected % Through 200 Mesh (Good @ 65 tph only)	62.26	64.41	68.22	67.12	62.74	62.67	66.26
Actual % Through 200 Mesh	73.90	68.20	70.60	68.80	75.40	74.00	65.40
Difference	11.64	3.79	2.38	1.68	12.66	11.33	-0.86
Ratio	118.69	105.88	103.49	102.50	120.18	118.07	98.71
% Retained on 30 & 50 Mesh	0.20	0.30	0.30	0.10	0.00	0.20	0.10
Actual % Through 50 Mesh	99.60	99.50	99.30	99.00	99.70	99.50	99.30
Actual % Through 100 Mesh	96.70	94.60	95.90	95.70	97.20	96.80	94.80

*Contract coal - [redacted]GI and air dry loss < 4%.
Expected is found from fineness correction vs % through 200 mesh graph.

IP7_032617

	A PULV	B PULV	C PULV	D PULV	E PULV	F PULV	G PULV
Fineness Correction	1.118422	1.086172	1.027619	1.044731	1.111325	1.112265	1.058075
Expected	62.26	64.41	68.22	67.12	62.74	62.67	66.26

IP7_032618

PG 896-4

Babcock & Wilcox

CONTRACT INFORMATION SHEET

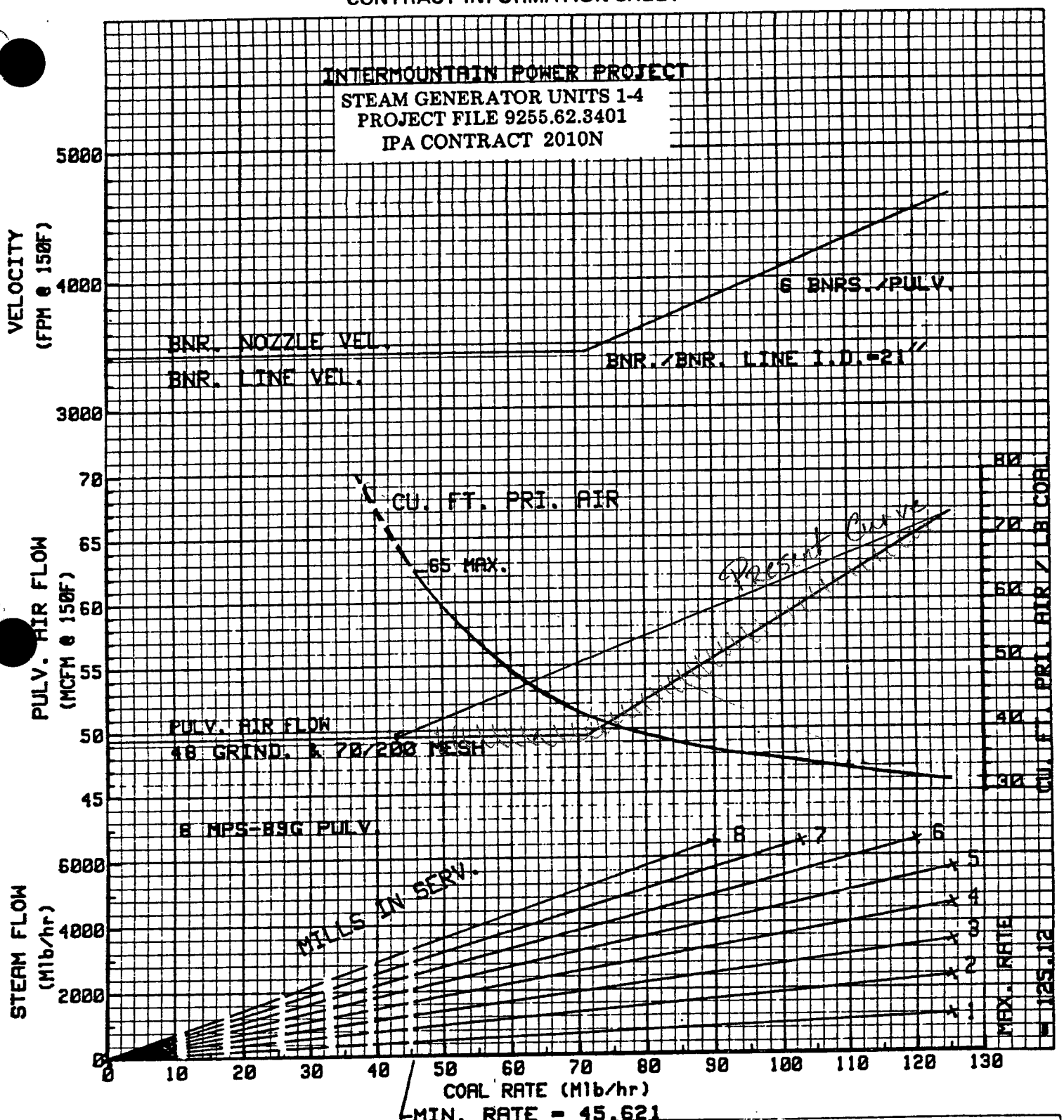

THESE CURVES ARE SUBMITTED FOR THE PURCHASER'S CONVENIENCE AND THE PERFORMANCE INDICATED THEREON SHALL NOT BE OFFERED BY THE COMPANY OR CONSTRUED BY THE PURCHASER AS A PROPOSAL OR CONTRACT OBLIGATION

DRAWN BY	DATE	APPROVED BY	DATE	A.O.
J. NEIDERT	2-1-82	RBH	2-5-82	

REL. NO. AND DATE	CONTRACT NO	FILE NO.
1 9-8-82	334-0614	RB-614

TITLE – PULVERIZER-BURNER COORDINATION CURVES - COAL (B)

CIS- 101.05

IP7_032619

BWFP 1810-6

THIS SUMMARY SHEET IS THE PROPERTY OF THE BABCOCK & WILCOX COMPANY AND IS LOANED UPON CONDITION THAT IT IS NOT TO BE COPIED, IN WHOLE OR IN PART OR USED FOR FURNISHING INFORMATION TO OTHERS, OR FOR ANY OTHER PURPOSE DETRIMENTAL TO THE INTERESTS OF THE BABCOCK & WILCOX COMPANY AND IS TO BE RETURNED UPON REQUEST.

A — FUEL AS FIRED

SAMPLES			
ANALYSES			
COAL — SOURCE — MINE			
COAL — SOURCE — CLASS			
COAL — SOURCE — GROUP			
COAL — SOURCE — SEAM			
COAL — SOURCE — DISTRICT			
COAL — SOURCE — COUNTY			
COAL — SOURCE — STATE			UTAH
COAL — SIZE		1-5/8"x0	1-5/8"x0
COAL — GRINDABILITY		55	48
COAL — SURFACE MOISTURE, %			
ASH SOFT. TEMP., F (REDUCING)		2350	2215(H-W)
PROX. ANAL. % — MOISTURE, TOTAL		18.8	8.3
PROX. ANAL. % — VOLATILE MATTER		35.5	37.1
PROX. ANAL. % — FIXED CARBON		37.9	40.6
PROX. ANAL. % — ASH		7.8	14.0
PROX. ANAL. % — TOTAL		100.0	100.0

ULTIMATE ANALYSIS — FUEL B BY	PULV.DES WT.	RANGE PC WT.	COAL "F" WT.	PERF.COAL WT.
ASH		8.0-16.0	7.81	14.00
S		0.4- 0.7	0.93	0.55
H_2		4.3- 4.9	4.13	4.56
C		58.5-64.5	55.60	61.45
CH_4				
C_2H_4				
C_2H_6				
C_3H_8				
C_4H_{10}				
C_5H_{12}				
C_6H_{14}				
Cl		0-0.04	0.04	0.02
CO_2				
SO_2				
H_2O	12.0	7.4-9.3	18.80	8.30
N_2		1.0-1.5	0.86	1.20
O_2		9.3-10.5	11.83	9.92
TOTAL	43 GRIND		100.00	100.00
BTU/LB	10,700	10,500 to	9,962	11,010
BTU/CU FT AT 60F 30 IN.HG		2,100		

COAL "F" WILL NOT EXCEED 50% BY WT. OF A COAL MIXTURE

* NOT INCLUDING VALVES & STATIC HEAD

▲ AT PULVERIZER INLET

** INCLUDES (-1.5 INCHES WG) FOR STACK EFFECT

UTILITY BOILER PERFORMANCE SUMMARY

BY RJK APPD. [illegible] DATE 12/2/81

BABCOCK & WILCOX

P23-[illegible]SO

B — PREDICTED PERFORMANCE

STEAM LEAVING SH, M LB/HR	3965	3965	6100	6100	6600
STEAM LEAVING RH, M LB/HR	3250	3250	5000	5000	5500
AUX. STEAM M LB/HR	0	450	0	450	0
TYPE OF FUEL	PERF. COAL	PERF.COAL	PERF.COAL	PERF.COAL	PERF.COAL
LOAD CONDITION	65%	65%	100%	100%	MCR
EXCESS AIR LEAVING FURN., %	23	23	17	17	17
NO. OF BURNERS IN OPERATION	42	42	42	42	42
HEAT. AVAIL., MKB/HR (FUEL & HEATED AIR)	5494	5908	7968	8374	8500
TOTAL INPUT, MKB/HR (FUEL & HT. CREDITS)	5261	5662	7563	7940	8049
HEAT CREDITS, MKB/HR	6.3	6.5	7.6	7.8	7.9
FUEL INPUT MKB/HR	5255	5655	7555	7932	8040
QUANTITY, LB/HR — FUEL (MCFH-NAT. GAS)	477.3	513.6	686.2	720.4	730.2
QUANTITY, LB/HR — FLUE GAS ENTERING AIR HTRS.	5274	5611	7241	7600	7703
QUANTITY, LB/HR — AIR TO BURNING EQUIPMENT	4765	5064	6538	6862	6954
QUANTITY, LB/HR — AIR HEATER LEAKAGE	367	378	477	498	505
PRESSURE, PSIG — STEAM AT SH OUTLET	2440	2440	2515	2515	2640
PRESSURE, PSIG — STEAM AT RH[1] INLET	350	350	539	539	590
PRESSURE, PSIG — STEAM AT RH[2] INLET					
PRESSURE DROP — REHEATER 1	16	16	25	28	28
PRESSURE DROP — REHEATER 2					
PRESSURE DROP — ECONOMIZER ▲	11	13	25	29	29
PRESSURE DROP — DRUM TO SH OUTLET	68	73	160	172	187
TEMPERATURE, F — STEAM — LEAVING SUPERHEATER	1005	1005	1005	1005	1005
TEMPERATURE, F — STEAM — LEAVING REHEATER 1	1005	1005	1005	1005	1005
TEMPERATURE, F — STEAM — ENTERING REHEATER 1	580	580	620	620	630
TEMPERATURE, F — STEAM — LEAVING REHEATER 2					
TEMPERATURE, F — STEAM — ENTERING REHEATER 2					
TEMPERATURE, F — FLUE GAS — LEAVING ECONOMIZER	686	675	725	730	740
TEMPERATURE, F — FLUE GAS — LEAVING AH (FACL. LKG) P/S	312/276	311/277	311/286	311/289	311/294
TEMPERATURE, F — FLUE GAS — LEAVING AH (INCL. LKG) P/S	280/267	280/268	280/276	280/279	280/280
TEMPERATURE, F — AIR — WATER ENTERING ECONOMIZER	490	490	543	543	555
TEMPERATURE, F — AIR — ENTERING UNIT PRI/SEC	74/62	74/63	77/64	78/65	78/65
TEMPERATURE, F — AIR — LEAVING AIR HEATER P▲/SEC	355/618	375/624	412/635	418/636	420/645
RESISTANCE, IN. OF WATER — GAS — FURNACE & CONVECTION BANKS	2.2	1.9	2.7	3.3	3.1
RESISTANCE, IN. OF WATER — GAS — FLUES TO AH OUTLET	0.9	1.0	1.4	1.5	1.5
RESISTANCE, IN. OF WATER — GAS — AIR HEATER	2.1	2.3	3.8	4.1	4.2
RESISTANCE, IN. OF WATER — GAS — TOT. FROM FURNACE TO AH OUTLET	5.2	5.2	7.9	8.9	8.8
RESISTANCE, IN. OF WATER — AIR — FUEL BURNERS & WINDBOX **	-0.3	0.0	1.1	1.4	1.4
RESISTANCE, IN. OF WATER — AIR — DUCTS & FLOW METER	1.0	1.2	2.1	2.3	2.3
RESISTANCE, IN. OF WATER — AIR — AIR HEATER	1.1	1.2	2.0	2.3	2.3
RESISTANCE, IN. OF WATER — AIR — TOT. FROM AH INLET TO FURN.	1.8	2.2	5.2	6.0	6.0
HEAT LOSS-EFF., % — DRY GAS	4.92	4.84	4.84	4.86	4.98
HEAT LOSS-EFF., % — H_2 & H_2O IN FUEL	5.14	5.14	5.15	5.15	5.16
HEAT LOSS-EFF., % — MOISTURE IN AIR	0.07	0.07	0.07	0.07	0.07
HEAT LOSS-EFF., % — UNBURNED COMBUSTIBLE	0.2	0.2	0.2	0.2	0.2
HEAT LOSS-EFF., % — RADIATION	0.24	0.22	0.17	0.16	0.15
HEAT LOSS-EFF., % — UNACC. FOR & MFRS. MARGIN	1.00	1.00	1.00	1.00	1.00
HEAT LOSS-EFF., % — TOTAL HEAT LOSS	11.57	11.47	11.43	11.44	11.56
*GROSS EFFICIENCY OF UNIT, %	88.43	88.53	88.57	88.56	88.44
HEAT CREDITS ADJUSTMENT, %	0.01	0.01	0.01	0.01	0.01
NET EFFICIENCY A.S.M.E. PTC-4.1, %	88.44	88.54	88.58	88.57	88.45
FUEL EFFICIENCY, % (OUTPUT/FUEL INPUT)	88.55	88.65	88.67	88.66	88.54
PULVERIZER — NO. IN USE PER BOILER	4 7	5 7	6 7	6 7	6 7
PULVERIZER — TOTAL POWER, KW HR/TON MOTOR OUTPUT					
PULVERIZER — % THRU 200 U.S.S. SIEVE	71 76	72 75	71 73	71 72	70 72

PREDICTED PERFORMANCE IS BASED ON COMBUSTION AIR ENTERING UNIT WI[illegible] 67LB MOISTURE/LB DRY AIR, ON 25.18 IN. HG BAROMETRIC PRESSURE, ON CONDITIONS & EQUIPMENT [illegible] THIS SUMMARY SHEET & ON ARRANGEMENT SHOWN ON DRAWING

C — EQUIPMENT PER UNIT

TYPE RADIANT

SIZE RBC

DESIGN PRESSURE (SH/RH) - 2975 PSIG/750 PSIG

FURNACE — WATER COOLED SCREEN (CIRCUMFERENTIAL)		
FURNACE — WATER COOLED (PROJECTED)		59,130
FURNACE — SUPERHEATER (PERIPHERAL) 54" CENTERLINE		23,244
FURNACE — SUPERHEATER (PERIPHERAL) 24" CENTERLINE		35,665
FURNACE — SUPERHEATER (PROJECTED)		4,367
FURNACE — TOTAL FURNACE HEATING SURFACE		122,406
CONVECTION — SATURATED (CIRCUMFERENTIAL)		13,035
CONVECTION — SUPERHEATER (CIRCUMFERENTIAL)		279,082
CONVECTION — REHEATER 1 (CIRCUMFERENTIAL)		300,263
CONVECTION — REHEATER 2 (CIRCUMFERENTIAL)		
CONVECTION — ECONOMIZER		99,902
CONVECTION — TOTAL CONVECTION HEATING SURFACE		692,282
TOTAL FURN. & CONV. PRESSURE PART. HTG. SURF.		814,688
FLAT PROJECTED FURNACE HEATING SURFACE — TO FACE OF PLATENS (24" CENTERLINE)		87,405
FLAT PROJECTED FURNACE HEATING SURFACE — TO FACE OF CONVECTION SURFACE (12" CENTERLINE)		125,510
FURNACE VOLUME, CU FT		962,055
AIR HEATER — TYPE REGENERATIVE-SECONDARY	NO. 2-33-1/2 VI-64	
AIR HEATER — TOTAL HEATING SURFACE, SQ FT		1,047,800
TYPE: REGENERATIVE-PRIMARY	NO. 2-24-1/2 VI-44	
TOTAL HEATING SURFACE, SQ.FT.		135,600

FUEL BURNER — TYPE DUAL REGISTER

FUEL BURNER — NO. 48 (6 BURNERS PER PULVERIZER)

PULVERIZER — TYPE MPS SIZE 89GR NO. 8

PULVERIZER — CAPACITY OF 6 PULV. IS 6600 M LB STEAM/HR BASED ON 48 GRIND 11 010 BTU COAL AT 70 % THRU 200 U.S.S. SIEVE

PULVERIZER — FOR 113.3 MLB COAL/PULV.-HR AT 70 % THRU 200 U.S.S. SIEVE MIN. GRIND IS 43. MAXIMUM TOTAL MOISTURE IS 12 % REQUIRING 465 F AIR

22% TOTAL MOISTURE COAL REQUIRES 540 F AIR.

STEAM TEMP CONTROL — SUPERHEAT BY SPRAY ATTEMPERATION

STEAM TEMP CONTROL — REHEAT BY GAS BIASING

UNIT CONSTRUCTION FEATURES — MEMBRANE WALL

UNIT CONSTRUCTION FEATURES — BALANCE DRAFT

UNIT CONSTRUCTION FEATURES — INDOOR UNIT

"AS SOLD" ARRANGEMENT

*CORRESPONDING TO AHB. METHOD PAR. 1.07 A.S.M.E. PTC-4.1

REVISIONS — NO.	DESCRIPTION	BY	DATE

INTERMOUNTAIN POWER PROJECT

IP7_032620

	MCR	100%	75%	50%	25%
MLB/HR Air: Tot.Air Ent. Pri. AH	1066.100	1006.100	833.7	623.7	393.5
Tot.Air Ent. Sec. AH	5788.694	5498.660	4449.569	3263.112	1911.132
Tot.Air Lvg. Pri. AH	896.1	837.1	679.7	476.7	255.5
Tot.Air Lvg. Sec. AH	5458.694	5183.660	4196.569	3047.112	1717.132
Air Ent. Pri.AH @ 80° - CFM	282516	267287	222876	167152	105786
Total Air					
Air Ent. Sec.AH @ 80° - CFM	1431737	1363668	1112392	822304	488294
Air Temp. Ent. Pri. AH	78	77	75	75	75
" " Ent. Sec. AH	65	64	63	62	88
Air Temp. Lvg. Pri. AH	580	582	584	590	533
" " Lvg. Sec. AH	651	647	628	611	525
Air Pressure - (inches H_2O)					
loss through air htr pri/sec	1.25/2.2	1.10/2.0	0.75/1.35	0.40/0.80	0.15/0.30
loss through duct work	1.55	1.38	1.13	0.58	0.39
required at bnr. windbox	3.16	2.83	2.60	1.93	3.85
total required at AH inlet*	5.64	4.94	3.82	2.07	3.34
Heat Absorbed by Boiler %	88.41	88.44	88.43	88.68	88.61
Heat Loss % Due to:					
H_2O from combustion of hydrogen & moisture in fuel	5.17	5.16	5.15	5.10	5.06
Theoretical dry gas	4.28	4.24	4.16	3.68	3.12
Excess air & moisture @ air heater outlet (uncorrected)	0.78	0.78	0.84	1.02	1.36
Moisture in theoretical air	0.01	0.01	0.01	0.02	0.04
Radiation loss	0.15	0.17	0.21	0.30	0.61
Unburned carbon	0.20	0.20	0.20	0.20	0.20
Unacct. for & Manuf. margin	1.00	1.00	1.00	1.00	1.00

*including stack effect

	MCR	100%	75%	50%	25%
Gas Velocity - fps					
Ent. Sec. SH S_L = 24"	39	36.8	28.6	19.0	9.2
Ent. Sec. SH S_L = 12"	42.4	39.9	30.8	20.6	10.2
Ent. Pendant RH	49.6	46.7	36.1	24.3	12.3
Ent. Horiz. RH	49.9	50.1	53.8	46.3	12.0
Ent. Horiz. SH	37.3	33.6	18.3	7.7	10.4
Coal Consumption LB/HR	717790	685200	542240	375300	182900

THIS INFORMATION IS SUBMITTED FOR THE PURCHASER'S CONVENIENCE AND THE PERFORMANCE INDICATED THEREON SHALL NOT BE OFFERED BY THE COMPANY OR CONSTRUED BY THE PURCHASER AS A PROPOSAL OR CONTRACT OBLIGATION.

DWG. JN-120881-3-0

RECEIVED FOR DISTRIBUTION
SEP 7 1982
BLACK & VEATCH

6-10080

IP7_032621

GO 1032-1
(For blueprinting, use Form GO 1032F)

BABCOCK & WILCOX

INTERMOUNTAIN POWER PROJECT - RB-614
STEAM GENERATOR UNITS 1-4
PROJECT FILE 9255.62.3401
IPA CONTRACT 2010N

SUBJECT Customer Information per Div. F1 Article 7 DATE 12-8-81 PAGE 2 OF 3

Article 7.1(c)(4) & (5)

ALL TEMPERATURES - HVT (°F)	MCR	100%	75%	50%	25%
Gas Temp. Entering Platens	2471	2440	2327	2080	1662
Gas Temp. Leaving Platens	2108	2076	1963	1739	1375
" " Ent. SSH $S_\perp$ = 24"	2108	2076	1963	1739	1375
" " Lvg. SSH $S_\perp$ = 24"	1830	1804	1690	1500	1203
" " Ent. SSH $S_\perp$ = 12"	1750	1776	1660	1475	1184
" " Lvg. SSH $S_\perp$ = 12"	1640	1615	1520	1351	1104
" " Ent. RH Outlet Bank	1615	1588	1488	1335	1085
" " Lvg. RH Outlet Bank	1470	1449	1360	1231	996
" " Ent. RH Intermedi Pendant	1460	1435	1350	1220	988
" " Lvg. RH Intermed. Pend.Bank	1365	1340	1270	1147	926
" " Ent. Horiz. RH Bank (4)	1305	1285	1214	1093	886
" " Ent. Horiz. RH Bank (3)	1104	1094	1055	975	764
" " Ent. Horiz. RH Bank (2)	988	962	958	899	701
" " Ent. Horiz. RH Bank (1)	862	860	844	802	635
" " Ent. Pri. SH Outlet Bank	1285	1269	1191	1062	877
" " Lvg. Pri. SH Outlet Bank	1230	1211	1119	978	845
" " Ent. Horiz. Pri.SH Bank (3)	1190	1167	1063	910	815
" " Ent. Horiz. Pri.SH Bank (2)	1055	1034	938	808	768
" " Ent. Horiz. Pri.SH Bank (1)	920	903	826	736	724
" " Ent. Econ. Bank (2)	842	827	764	694	693
" " Ent. Econ. Bank (1)	765	751	686	603	598
" " Ent. Airheaters	744	736	707	675	567

	MCR	100%	75%	50%	25%	
Flue Gas Temperature Lvg AH's (uncor/corr)						Article 7.1(c)(5)
Pri AH	313/279	312/280	316/281	323/280	335/280	
Sec AH	295/285	292/282	273/263	253/243	222/210	
Gas CFM Lvg. AH's at T corrected						Article 7.1(c)(6)
Total Air Pri AH	414437	400069	355460	288912	219685	
Sec AH	2566844	2433861	1900740	1344646	730180	
Gas Flow Eng. AH's (MLB/HR) Pri AH	962.0	924.0	817.0	646.0	463.5	Article 7.1(c)(7) a & b
" Sec AH	6588.2	6285.5	5054.9	3665.1	2024.8	
Gas Flow Lvg. AH's (MLB/HR) Pri AH	1132.2	1093.0	971.0	793.0	601.5	
Sec AH	6918.2	6600.5	5307.9	3881.1	2218.9	
Gas Distribution through horiz. convection pass (%) RH/PSH	41/59	44/56	60/40	75/25	38/62	Article 7.1(c)(8)
Excess Air - %						Article 7.1(c)(9)
leaving furnace	16	16	19.5	27	50	a
leaving econ.	17	17	20.5	28	51	b
*leaving airheaters	26	26	29.5	37	74	c

*Primary & Secondary Airheaters Combined

RECEIVED FOR DISTRIBUTION SEP 7 1982 BLACK & VEATCH

THIS INFORMATION IS SUBMITTED FOR THE PURCHASER'S CONVENIENCE AND THE PERFORMANCE INDICATED THEREON SHALL NOT BE OFFERED BY THE COMPANY OR CONSTRUED BY THE PURCHASER AS A PROPOSAL OR CONTRACT OBLIGATION.

DWG. JN-120881-2-0

6-10079

IP7_032622

GO 1032-1
(For blueprinting, use Form GO 1032F)

BABCOCK & WILCOX

INTERMOUNTAIN POWER PROJECT - RB-614
STEAM GENERATOR UNITS 1-4
PROJECT FILE 9255.62.3401
IPA CONTRACT 2010N

RECEIVED FOR DISTRIBUTION
SEP 7 1982
BLACK & VEATCH

IP7_032623

SUBJECT Customer Information per Div. F1 Article 7 DATE 12-8-81 PAGE 1 OF 3

Article 7.1(c)(1)

	MCR PRESS PSIG	MCR TEMP °F	100% P PSIG	100% T °F	75% P PSIG	75% T °F	50% P PSIG	50% T °F	25% P PSIG	25% T °F
Economizer Inlet Header	2880	554	2723	545	2600	512	2510	470	2458	405
Economizer Intermediate Hdr.	2866	571	2711	561	2590	526	2501	481	2450	438
Economizer Outlet Header	2841	574	2686	565	2567	529	2480	484	2430	443
Steam Drum	2822	687	2670	679	2558	671	2475	667	2428	665
Furnace Lower Wall Hdrs.	2879	667	2723	659	2608	656	2523	654	2472	651
Furnace Upper Wall Hdrs.	2827	687	2675	679	2562	671	2478	667	2430	665
Primary SH Inlet Headers	2791	695	2644	687	2544	683	2469	679	2426	674
Primary SH Outlet Header	2773	720	2628	720	2536	709	2464	692	2425	692
Furn. Platen SH Inlet Hdr.	2758	717	2615	706	2529	694	2461	692	2425	692
Furn. Platen SH Outlet Hdr.	2732	784	2592	777	2516	777	2455	782	2423	781
Secondary SH Inlet Hdrs.	2717	784	2579	777	2508	764	2452	775	2422	781
Sec. SH Intermediate Manifolds	2699	914	2563	912	2500	908	2448	919	2421	892
Secondary SH Outlet Hdr.	2645	1005	2515	1005	2473	1005	2436	1005	2413	950
Reheat Inlet Header	575	625	546	623	420	583	287	553	143	530
Reheat Outlet Headers	551	1005	524	1005	402	1005	275	975	143	850

Article 7.1(c)(2)

	MCR	100%	75%	50%	25%
First Stage Attemperator Data					
(Lb/Hr) Total Expected Flow	43608	183359	161831	0.0	0.0
" " Design "	653453	616547	462909	222656	84201
(psi) Expected Nozzle Δ P	1.0	11.1	8.2	0.0	0.0
" Design " "	77.7	66.6	38.6	8.7	1.2
Second Stage Attemp. Data					
(Lb/Hr) Total Expected Flow	0.0	0.0	49581	18374	0.0
" " Design "	248392	384586	456107	230490	23201
(psi) Expected Nozzle Δ P	0.0	0.0	1.2	1.0	0.0
" Design " "	24.4	57.7	81.4	20.0	1.0
Reheat Attemperator Data					
(Lb/Hr) Total Design Flow	207480	197000	151600	103200	45480
(psi) Design Nozzle Δ P	88.8	81.0	47.3	21.6	4.3
(°F) Spray Water Temp.	343	342	325	302	265

Article 7.1(c)(3) a, b, c

Gas Pressure (in.H_2O)	MCR	100%	75%	50%	25%
Leaving Furnace	-0.1	-0.1	-0.1	-0.1	-0.1
Ent. Sec. SH S_L = 24"	-0.1	-0.1	-0.1	-0.1	-0.1
Ent. SSH Out. S_L = 12"	-0.21	-0.20	-0.17	-0.14	-0.11
Ent. RH Outlet Bank	-0.32	-0.30	-0.23	-0.17	-0.12
Ent. RH Pend. Bank	-0.49	-0.47	-0.35	-0.23	-0.14
Ent. Horiz. RH (4)	-0.72	-0.64	-0.46	-0.29	-0.16
Ent. Horiz. RH (3)	-1.10	-1.02	-0.93	-0.63	-0.27
Ent. Horiz. RH (2)	-1.30	-1.23	-1.19	-0.85	-0.33
Ent. Horiz. RH (1)	-1.58	-1.52	-1.56	-1.15	-0.42
Ent.Pri.SSH Outlet Bank	-0.61	-0.55	-0.40	-0.23	-0.15
Ent. Horiz. PSH (3)	-0.72	-0.64	-0.43	-0.24	-0.17
Ent. Horiz. PSH (2)	-0.88	-0.77	-0.47	-0.25	-0.19
Ent. Horiz. PSH (1)	-1.09	-0.93	-0.53	-0.26	-0.21
Ent. Econ. Bank (2)	-1.27	-1.07	-0.58	-0.27	-0.23
Ent. Econ. Bank (1)	-1.38	-1.16	-0.61	-0.28	-0.24
Econ. Hopper Press.	-2.07	-2.01	-2.11	-1.62	-0.56
Press. Ent. Pri. AH*	-4.20	-4.07	-3.86	-3.15	-1.54
Press. Ent. Sec. AH*	-3.71	-3.64	-3.52	-2.94	-1.45
Press. Lvg. Pri. AH	-6.05	-5.77	-5.26	-4.10	-2.09
Press. Lvg. Sec. AH	-7.81	-7.44	-6.12	-4.44	-2.00

*Including stack effect

THIS INFORMATION IS SUBMITTED FOR THE PURCHASER'S CONVENIENCE AND THE PERFORMANCE INDICATED THEREON SHALL NOT BE OFFERED BY THE COMPANY OR CONSTRUED BY THE PURCHASER AS A PROPOSAL OR CONTRACT OBLIBATION (DWG. JN-120881-1-0)

6-10078