To Rand Crafts
11/19/03

Present Burner

Babcock and Wilcox (B&W), Dual Register Coal Burners (DRB), Phase 5.

Maximum burner BTU throughput is 208 MBTU/HR.

Future Burner

Advanced Burner Technologies (ABT), Opti-Flow Burner.

Maximum burner BTU throughput is 220 MBTU/HR.

$$\text{B\&W Throughput} = \frac{(11{,}010\ \text{BTU/lb})(113.3\times10^{3}\ \text{lb/pulv-hr})(7\ \text{pulv.})}{42\ \text{burners w/ 7 pulv's on line.}}$$

$$= 208\ \text{MBTU/burner-hr}$$

Gray Book
Steam Generator Vol I "Performance" Tab.

(350 Tons/hr Coal)/(7 mills) = 100,000 lbs/hr Coal per mill

BWFP 1810-6

A — FUEL AS FIRED

SAMPLES			
ANALYSES			
COAL SOURCE — KIND			
CLASS			
GROUP			
MINE			
SEAM			
DISTRICT			
COUNTY			
STATE			UTAH
SIZE		1-5/8"x0	1-5/8"x0
GRINDABILITY		55	48
SURFACE MOISTURE, %			
ASH SOFT. TEMP., F (REDUCING)		2350	2215(H-W)
PROX. ANAL. — MOISTURE, TOTAL		18.8	8.3
VOLATILE MATTER		35.5	37.1
FIXED CARBON		37.9	40.6
ASH		7.8	14.0
TOTAL		100.0	100.0

FUEL	PULV. DES	RANGE PC	COAL "P"	PERF. COAL
% BY	WT.	WT.	WT.	WT.
ASH		8.0-16.0	7.81	14.00
S		0.4- 0.7	0.93	0.55
N_2		4.3- 4.9	4.13	4.56
C		58.5-64.5	55.60	61.45
CH_4				
C_2H_4				
C_2H_6				
C_3H_8				
C_4H_{10}				
C_5H_{12}				
C_6H_{14}				
Cl		0-0.04	0.04	0.02
CO_2				
SO_2				
H_2O	12.0	7.4-9.3	18.80	8.30
H_2		1.0-1.5	0.86	1.20
O_2		9.3-10.5	11.83	9.92
TOTAL	43 GRIND		100.00	100.00
BTU/LB	10,700	10,500 to 2,100	9,962	11,010
BTU/CU FT AT 60F 30 IN. HG				

ULTIMATE ANALYSIS

COAL "P" WILL NOT EXCEED 50% BY WT. OF A COAL MIXTURE

* NOT INCLUDING VALVES & STATIC HEAD
▲ AT PULVERIZER INLET
** INCLUDES (-1.5 INCHES WG) FOR STACK EFFECT

UTILITY BOILER PERFORMANCE SUMMARY

BY RJK APPD. [illegible] DATE 12/2/81

BABCOCK & WILCOX

P23-310-0-1S0

B — PREDICTED PERFORMANCE

STEAM LEAVING SH, M LB/HR	3965	3965	6100	6100	6600
STEAM LEAVING RH, M LB/HR	3250	3250	5000	5000	5500
AUX. STEAM M LB/HR	0	450	0	450	0
TYPE OF FUEL	PERF. COAL	PERF. COAL	PERF. COAL	PERF. COAL	PERF. COAL
LOAD CONDITION	65%	65%	100%	100%	MCR
EXCESS AIR LEAVING ECON., %	23	23	17	17	17
NO. OF BURNERS IN OPERATION	42	42	42	42	42
HEAT. AVAIL., MKB/HR (FUEL & HEATED AIR)	5494	5908	7968	8374	8500
TOTAL INPUT, MKB/HR (FUEL & HT. CREDITS)	5261	5662	7563	7940	8049
HEAT CREDITS, MKB/HR	6.3	6.5	7.6	7.8	7.9
FUEL INPUT, MKB/HR	5255	5655	7555	7932	8040
QUANTITY M LB/HR — FUEL (MCFH-NAT. GAS)	477.5	513.6	686.2	720.4	730.2
FLUE GAS ENTERING AIR HTRS.	5274	5611	7261	7600	7703
AIR TO BURNING EQUIPMENT	4765	5064	6538	6862	6954
AIR HEATER LEAKAGE	367	378	477	498	505
PRESSURE, PSIG — STEAM AT SH OUTLET	2440	2440	2515	2515	2640
STEAM AT RH1 INLET	350	330	539	539	590
STEAM AT RH2 INLET					
PRESSURE DROP — REHEATER 1	16	16	25	28	28
REHEATER 2					
ECONOMIZER *	11	13	25	29	29
DRUM TO SH OUTLET	68	73	160	172	187
TEMPERATURE, F — STEAM: LEAVING SUPERHEATER	1005	1005	1005	1005	1005
LEAVING REHEATER 1	1005	1005	1005	1005	1005
ENTERING REHEATER 1	580	580	620	620	630
LEAVING REHEATER 2					
ENTERING REHEATER 2					
FLUE GAS: LEAVING ECONOMIZER	686	675	725	730	740
LEAVING AH (EXCL. LKG) P/S	312/276	311/277	311/286	311/289	311/294
LEAVING AH (INCL. LKG) P/S	280/267	280/268	280/276	280/279	280/280
WATER ENTERING ECONOMIZER	490	490	543	543	555
AIR: ENTERING UNIT PRI/SEC	74/62	74/63	77/64	78/65	78/65
LEAVING AIR HEATER P/SEC	355/618	375/624	412/635	418/636	420/645
RESISTANCE, IN. OF WATER — GAS: FURNACE & CONVECTION BANKS	2.2	1.9	2.7	3.3	3.1
FLUES TO AH OUTLET	0.9	1.0	1.4	1.5	1.5
AIR HEATER	2.1	2.3	3.8	4.1	4.2
TOT. FROM FURNACE TO AH OUTLET	5.2	5.2	7.9	8.9	8.8
AIR: FUEL BURNERS & WINDBOX **	-0.3	0.0	1.1	1.4	1.4
DUCTS & FLOW METER	1.0	1.2	2.1	2.3	2.3
AIR HEATER	1.1	1.2	2.0	2.3	2.3
TOT. FROM AH INLET TO FURN.	1.8	2.2	5.2	6.0	6.0
HEAT LOSS-EFF., % — DRY GAS	4.92	4.84	4.84	4.86	4.98
H_2 & H_2O IN FUEL	5.14	5.14	5.15	5.15	5.16
MOISTURE IN AIR	0.07	0.07	0.07	0.07	0.07
UNBURNED COMBUSTIBLE	0.2	0.2	0.2	0.2	0.2
RADIATION	0.24	0.22	0.17	0.16	0.15
UNACC. FOR & MFRS. MARGIN	1.00	1.00	1.00	1.00	1.00
TOTAL HEAT LOSS	11.57	11.47	11.43	11.44	11.56
*GROSS EFFICIENCY OF UNIT, %	88.43	88.53	88.57	88.56	88.44
HEAT CREDITS ADJUSTMENT, %	0.01	0.01	0.01	0.01	0.01
NET EFFICIENCY A.S.M.E. PTC-4.1, %	88.44	88.54	88.58	88.57	88.45
FUEL EFFICIENCY, % (OUTPUT/FUEL INPUT)	88.55	88.65	88.67	88.66	88.54
PULVERIZERS — NO. IN USE PER BOILER	4 7	5 7	6 7	6 7	6 7
TOTAL POWER, KW HR/TON MOTOR OUTPUT					
% THRU 200 U.S.S. SIEVE	71 76	72 75	71 73	71 72	70 72

PREDICTED PERFORMANCE IS BASED ON COMBUSTION AIR ENTERING UNIT WITH .0067 LB MOISTURE/LB DRY AIR, ON 25.18 IN. HG. BAROMETRIC PRESSURE, ON CONDITIONS & EQUIPMENT GIVEN ON THIS SUMMARY SHEET & ON ARRANGEMENT SHOWN ON DRAWING

C — EQUIPMENT PER UNIT

TYPE	RADIANT
SIZE	
	RBC
DESIGN PRESSURE (SH/RH) - 2975 PSIG/750 PSIG	
FURNACE — WATER COOLED SCREEN (CIRCUMFERENTIAL)	
WATER COOLED (PROJECTED)	59,130
SUPERHEATER (PERIPHERAL) 54" CENTERLINE	23,244
SUPERHEATER (PERIPHERAL) 24" CENTERLINE	35,665
SUPERHEATER (PROJECTED)	4,367
TOTAL FURNACE HEATING SURFACE	122,406
CONVECTION — SATURATED (CIRCUMFERENTIAL)	13,035
SUPERHEATER (CIRCUMFERENTIAL)	279,082
REHEATER 1 (CIRCUMFERENTIAL)	300,263
REHEATER 2 (CIRCUMFERENTIAL)	
ECONOMIZER	99,902
TOTAL CONVECTION HEATING SURFACE	692,282
TOTAL FURN. & CONV. PRESSURE PART. HTG. SURF.	814,688
FLAT PROJECTED FURNACE HEATING SURFACE — TO FACE OF PLATENS (24" CENTERLINE)	87,405
TO FACE OF CONVECTION SURFACE (12" CENTERLINE)	125,510
FURNACE VOLUME, CU FT	962,055
AIR HEATER — TYPE REGENERATIVE-SECONDARY	NO. 2-33-1/2 VI-64
TOTAL HEATING SURFACE, SQ FT	1,047,800
TYPE: REGENERATIVE-PRIMARY	NO. 2-24-1/2 VI-44
TOTAL HEATING SURFACE, SQ.FT.	135,600
FUEL BURNER — TYPE	DUAL REGISTER
NO.	48 (6 BURNERS PER PULVERIZER)
PULVERIZER — TYPE MRS	SIZE 89GR SQ. 8
CAPACITY OF 6 PULV. IS 6600 M LB STEAM/HR BASED ON 68 GRIND	
11 010 BTU COAL AT 70 % THRU 200 U.S.S. SIEVE	
FOR 113,300 LB COAL/PULV.-HR AT 70 % THRU 200 U.S.S. SIEVE MIN. GRIND	
IS 43 MAXIMUM TOTAL MOISTURE IS 12 % REQUIRING 465 F AIR	
22% TOTAL MOISTURE COAL REQUIRES 540 F AIR.	
STEAM TEMP. CONTROL	SUPERHEAT BY SPRAY ATTEMPERATION
	REHEAT BY GAS BIASING
UNIT CONSTRUCTION FEATURES	MEMBRANE WALL
	BALANCE DRAFT
	INDOOR UNIT

"AS BOLD" ARRANGEMENT

*CORRESPONDING TO ABB. METHOD PAR. 1.07 A.S.M.E. PTC-4.1

REVISIONS NO.	DESCRIPTION	BY	DATE

INTERMOUNTAIN POWER PROJECT

113,300 lbs/hr.

THIS SUMMARY SHEET IS THE PROPERTY OF THE BABCOCK & WILCOX COMPANY AND IS LOANED UPON CONDITION THAT IT IS NOT TO BE COPIED, IN WHOLE OR IN PART OR USED FOR FURNISHING INFORMATION TO OTHERS, OR FOR ANY OTHER PURPOSE DETRIMENTAL TO THE INTERESTS OF THE BABCOCK & WILCOX COMPANY AND IS TO BE RETURNED UPON REQUEST

IP7_030074

Present Burner

Babcock and Wilcox (B&W), Dual Register Coal Burners (DRB), Phase 5.

Maximum burner BTU throughput is 208 MBTU/HR.

Future Burner

Advanced Burner Technologies (ABT), Opti-Flow Burner.

Maximum burner BTU throughput is 220 MBTU/HR.

ADVANCED BURNER TECHNOLOGIES
P.O Box 410, 271 Route 202/206
Pluckemin, NJ 07978
Phone: 908-470-0470; FAX: 908-470-0479
www.advancedburner.com

November 19, 2003

Intermountain Power Service Corporation
850 West Brush Wellman Road
Delta, Utah 84624

Attention: James Nelson

Reference: IPSC Contract 04-45606
Unit 2 Low NOx Burners

Dear Mr. Nelson:

Confirming our previous discussion, the ABT burners on the subject Contract are designed for a maximum throughput of 220 MBtu/hr.

Please advise should you have any other questions.

Sincerely yours,

Sal N. Ferrara
Director of Proposals & Projects

cc: TarkelLarson
JoelVatsky

DISCLOSURE NOTICES:
1. THE INFORMATION CONTAINED IN THIS DRAWING IS THE SOLE PROPERTY OF ADVANCED BURNER TECHNOLOGIES. ANY REPRODUCTION IN PART OR IN WHOLE WITHOUT THE WRITTEN PERMISSION OF ADVANCED BURNER TECHNOLOGIES IS PROHIBITED.
2. THE STRUCTURE AND OPERATION OF OPTI-FLOW FUEL DISTRIBUTION SYSTEM AND DUAL REGISTERS ARE SUBJECT OF ONE OR MORE U.S. PATENT APPLICATIONS.

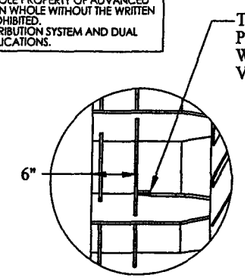

DETAIL D
SCALE 1 : 12
TIP THERMOCOUPLE LOCATION

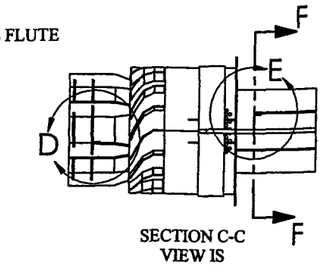

SECTION C-C
VIEW IS
03008-400-A00-D0
ONLY

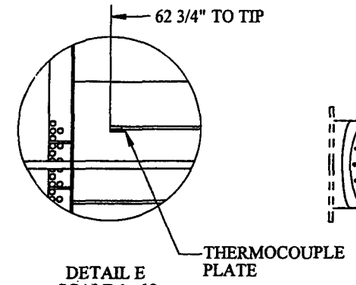

DETAIL E
SCALE 1 : 12
BODY THERMOCOUPLE LOCATION

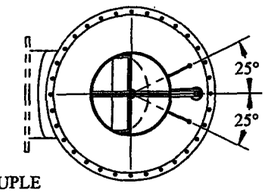

SECTION F-F

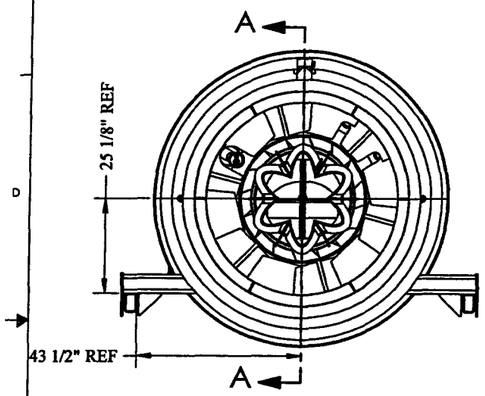

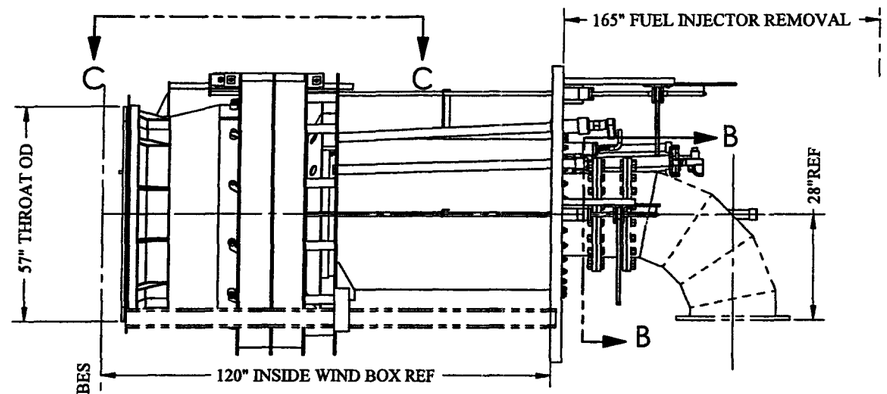

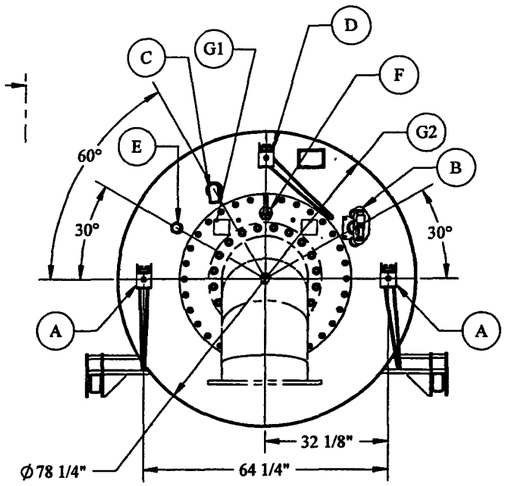

C.C.W. SHOWN
C.W. OPPOSITE HAND

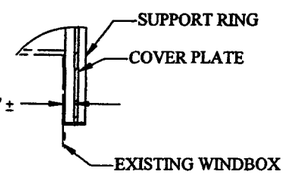

DETAIL G
SCALE 1 : 12

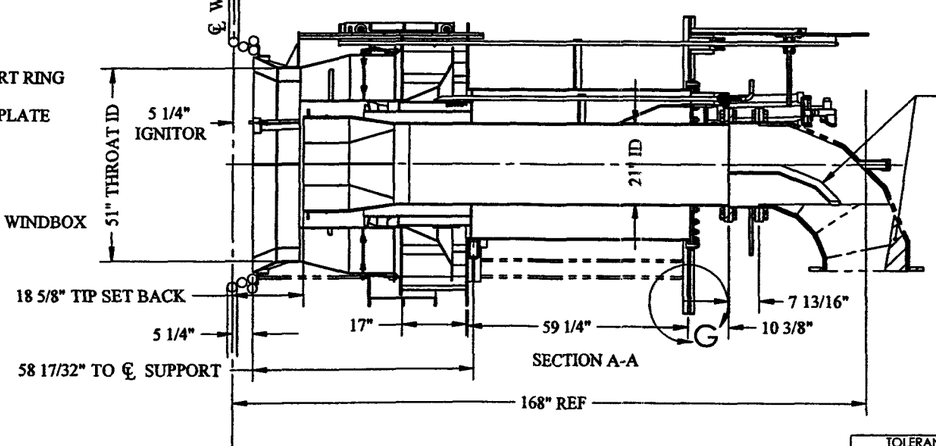

SECTION A-A

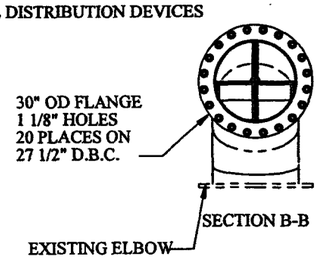

SECTION B-B

ITEM	DESCRIPTION	OPERATION	STROKE
A	SPIN VANE DRIVE	IN TO OPEN	5 3/4"
B	EXISTING OIL IGNITOR		
C	ABB FIBER OPTIC FLAME SCANNER		
D	DAMPER DRIVE	IN TO OPEN	16"
E	SIGHT TUBE		
F	INNER AIR ZONE DAMPER	PUSH TO OPEN	6"
G1	TIP THERMOCOUPLE JUNCTION BOX		
G2	BODY THERMOCOUPLE JUNCTION BOX		

CONTRACT NO.	PART NO.	QUANTITY
A03008	03008-100-A00-D0 CW	24
A03008	03008-100-A00-D0 CCW	24

EST. WEIGHT: 8296.51 lb.
MATERIAL:
SIZE:
TYPE:
ALL DIMENSIONS ARE IN INCHES UNLESS OTHERWISE NOTED
CUSTOMER NAME: I.P.S.C.
PLANT NAME: IGS
UNIT: 2

TOLERANCES UNLESS SPECIFIED

	MACHINE PARTS	WELD FABRICATED PARTS
UP TO 6" INCL.	±0.016"	±0.03"
OVER 6" TO 12" INCL.	±0.03"	±0.06"
OVER 12" TO 24" INC.	±0.05"	±0.09"
OVER 24"	±0.06"	±0.125"

ANGLES=±0° 30'
SURFACE ROUGHNESS NOT EXCEED 125
BREAK SHARP CORNERS
DO NOT SCALE PRINT

CAD GENERATED DRAWING
DO NOT MANUALLY UPDATE

	NAME	DATE
DRAWN	RJ	10/27/2003
CHECKED		
ENG APPR.		
MFG APPR.		
Q.A.		

NO.	DATE	REMARKS	BY

ADVANCED BURNER TECHNOLOGIES

OPTI-FLOW BURNER
IGS UNIT 3
GENERAL ARRANGEMENT

SIZE C | DWG. NO. 03008-100-A00-D0 | REV
SCALE 1:24 | SHEET 1 OF 1

IP7_030077

REFERENCE LIST: (36 DUAL REGISTER BURNERS 18 FRONT WALL, 18 REAR WALL)

SYM.	DESCRIPTION	DWG.-NO.	MK-NO	RB-614 QTY.	RB-615/617 QTY.
A	INNER SLIDING SLV 70" OUTER ROTA ASSY. 6 CW 6 CCW	157155D	1 & 2	18CW 18CCW	24CW 24CCW
B	OUTER REGISTER FRAME CUT-OUT REAR PLATE (196988C)	179890B	1 & 2	36	48
C	OUTER REGISTER FRAME CUT-OUT FRONT PLATE (196988C)	179891B	1 & 2	36	48
D	THROAT SLEEVE	196930C	2	36	48
E	THROAT SLEEVE CASING	173694B	5	36	48
F	21" DIFFUSER COAL NOZZLE ASSY "X": 10'-5 5/8"	188493C		36	48
G	INNER AIR SLEEVE	173695B	1	36	48
H	21" SEGMENTED COAL ELBOW ASSY	199591C	1	36	48
J					
K					
L	COVER PLATE	199599C	1 & 2	36	48
M	MOUNTING PLATE	167660B	1	36	48
N					
P	HANDLE & QUADRANT ASSY. (VANE) "L": 7'-9 1/8"	183366C		36	48
Q	OPERATOR HANDLE ASSY (SLIDING SLV) "L": 7'-10 1/4"	188477C		36	48
R	HANDLE & QUADRANT ASSY. (OUTER REGISTER) "L": 8'-6 3/8"	183367C		36	48
S	OIL LIGHTER CFA 18 RH. 18 LH.	269375E	1 & 2	18RH 18LH	24RH 24LH
T	OBSERVATION DOOR ASSY.	203798C		36	48
U	SCANNER SUPPORT ASSY. "L": 6'-10"	102150A	-	36	48
V	REGISTER SUPPORT BRACKET	179491B	1,2&3	108	144
W	AIR VANE	145450	26	36	48
X	AIR VANE ALTERATION	179889B		180	240
Y	THREADED BAR (AIR VANE LINKAGE)	133995A		36	48
Z	INNER AIR ZONE DISK	196998C	1	36	48
AA	INNER AIR SLEEVE CUT OUT FRONT PLATE (157155D SYM."N")	179893B	1 & 2	36	48
AB	INNER AIR ZONE DISK ALTERATION	179892B	1 & 2	36	48
AC	TEE SCRD. 1/2" 3000# SA105 3008/5362			72	96
AD	PLUG SCRD. 1/2" SQ. HD. 3000# SA105 5000/5362			72	96
AE					
AF	SUPPLY HOSE 3/8" ANACONDA BW21-1 X 57" LG. WITH GALVANIZED STEEL INTERLOCKED CONDUIT W/STYLE SHWW BOTH ENDS C.S. FITTINGS.			72	96
AG	VALVE BALL SCRD 1/2" WORCESTER 5846R-SE 600#			36	48
AH	VALVE GLOBE SCRD 1/2" VOGT 12443			36	48
AJ					
AK	NIP. TBE 4032/5361 SA106B 1/2" SCH. 080 X 3" LG.			144	192
AL	PIPE A120 3" SCH 040 X 6'-10" TOE NPT			36	48
AM	BUSHING SCRD 1/2" X 3/8" SA105 2916/5362			72	96
AN	UNION SCRD 1/2" 3000# SA105 2836/5362			72	96
AP	REGISTER SUPPORT BRACKET RETAINER	135865A	1	144	192
AQ	PLUG SCRD 3/4" SQ.HD. 125#			36	48

EIGHT (8) SETS OF LIGHTER MAINTENANCE TOOLS - ONE (1) SET PER BNR ROW

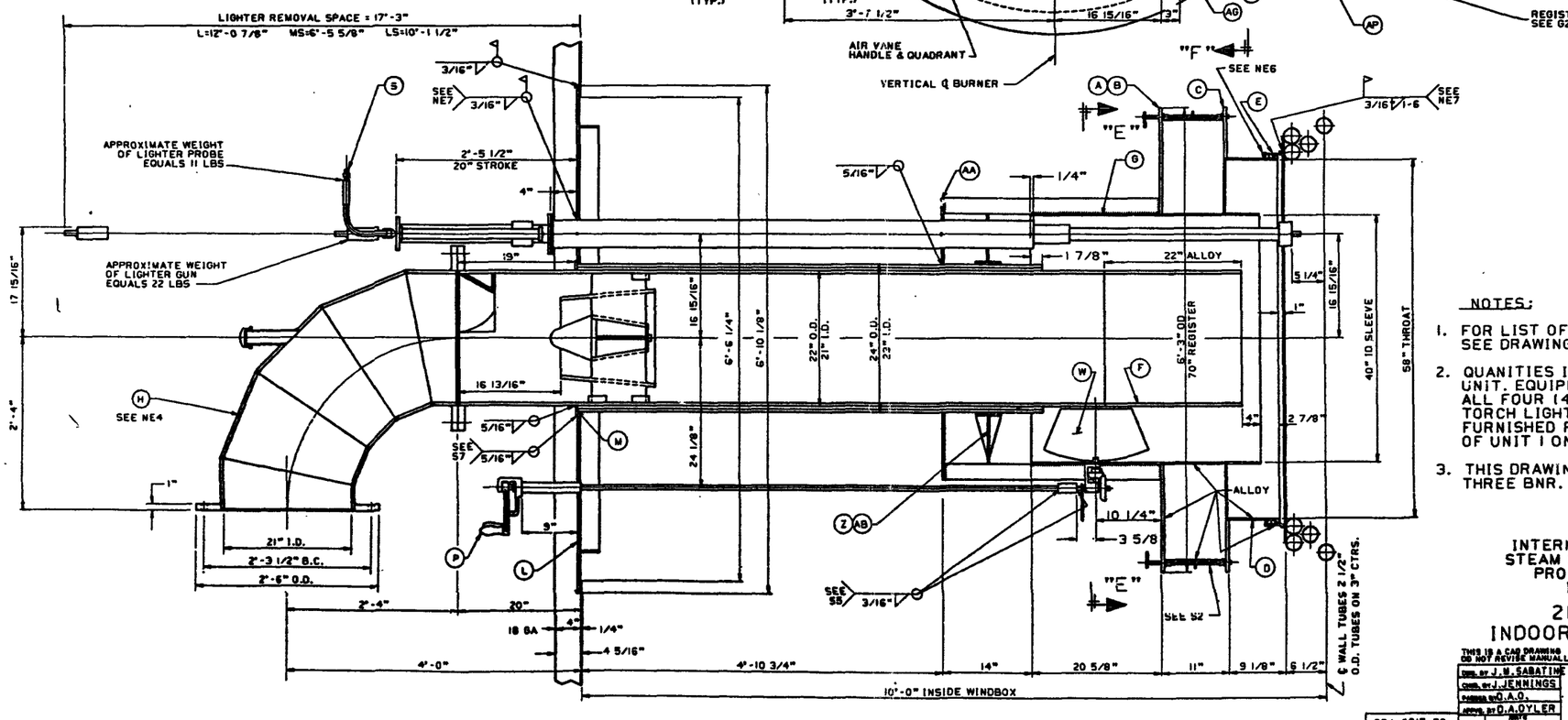

SECTION "A-A"

5-10008

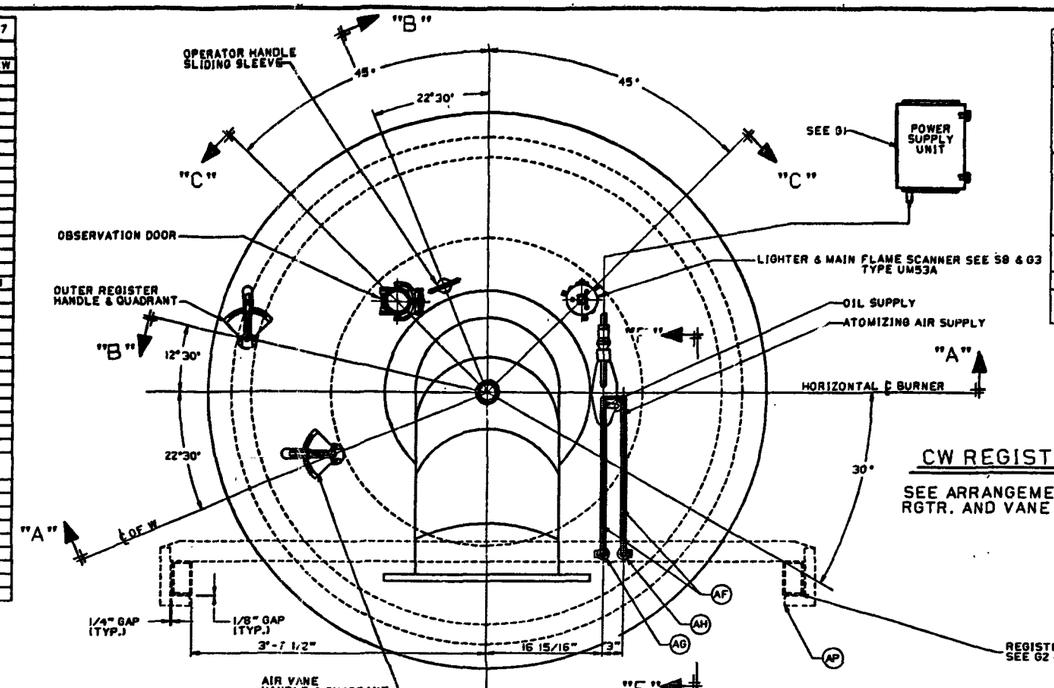

CW REGISTER CW VANES SHOWN

SEE ARRANGEMENT DWGS. FOR DIRECTION OF RGTR. AND VANE AIR FLOW FOR ALL BURNERS

REVISIONS

REVISION NO.	DESCRIPTION	DATE	APPROVAL	
1	CHGD QUAN. OF LTRS SYM "S". NOTE ON MAINTENANCE TOOLS & ATOMIZING AIRFAN TO AIR. INDICED VIEW "F-F" ADDED CONTRACT NO.& NOTES 2 & 3. ADDED TO CUST. NAME.	4-3-91	DLS/JJJ	*
2	CHGD DIM. 4'-3" TO 4'-0. 23" TO 20" & 20 15/16" TO 17 15/16". CHGD. "L" DIM. SYM "F" FROM 10'-7 3/4" TO 10'-8 3/8". CHGD COAL NOZZLE ALLOY TIP FROM 12" TO 22". CHGD. DIM IN ZONE A-6 FROM 4'-3" TO 4'-0". ADDED PLASMA TORCH REMOVAL.	3-6-92	MAR. SBC/JJJ	*
3	CHGD DESC SYMS "J,N,O,R,AC,AD,AF, AG,AK,AL & AM". DEL SYMS "AE & AJ". ADDED SYMS "AN & AP". CHGD REG SUPPORT TO NEW DESIGN. REVERSED OIL & AIR HOSES. CHGD "L" DIM "A" & DIM & SYMS REMOVED. SPACE DIM IN ZONE "D-7". CHGD DIM 3/8" TO 1/4" & 4 1/4" TO 4 3/16" IN ZONE "A-8". CHGD DIM 3 1/8" TO 3 5/8" IN ZONE "B-9".	2-20-92	DLS/LE	*
4	DELETED SYM "K". ADDED DWG NO.& TO SYMS "B,C,L,M,S & AB". ADDED SYMS "AH & AQ". RELOCATED OUTER REGISTER HANDLE & QUADRANT.	2-20-92	DLS/LE	*
5	CHGD. NOTE 3 IN ZONE E-2. ADDED SCANNER TYPE IN ZONE E-2.	2-6-92	SBC/LE	*
6	CHGD. "H9" DIM. 5'-8 1/8" TO 8'-3 5/8" IN ZONE D-7. CHGD. DIM. 4 1/4" TO 4" IN ZONE C-5. CHGD. DIM. 1/2" TO 1/4" IN ZONE C-6.	2-4-92	SBC/LE	*

NOTES:

1. FOR LIST OF REFERENCE DRAWINGS & NOTES SEE DRAWING NO. 197002C.
2. QUANITIES INDICATED ARE FOR ONE (1) UNIT. EQUIPMENT TO BE IDENTICAL FOR ALL FOUR (4) UNITS, EXCEPT FOR PLASMA TORCH LIGHTERS WHICH ARE TO BE FURNISHED FOR THE LOWER BURNER LEVEL OF UNIT 1 ONLY. (B&W CONTRACT RB-614)
3. THIS DRAWING REPRESENTS THE UPPER THREE BNR. ELEVATIONS FRONT & REAR WALL

INTERMOUNTAIN POWER PROJECT
STEAM GENERATOR UNITS 1,2,3 & 4
PROJECT FILE 9255.62.3401
IPA CONTRACT 2010N

21-58T-40S-70R
INDOOR UNIT SUCTION FIRED

THIS IS A CAD DRAWING DO NOT REVISE MANUALLY

DWN. BY J.M. SABATINE
CHKD. BY J. JENNINGS
ENGINEER O.A.O.
APPVD. BY O.A.OYLER

SECTIONAL ASSEMBLY
DUAL REGISTER
BURNER

BABCOCK & WILCOX
A MCDERMOTT COMPANY

334-0615-39
334-0616-39
334-0617-39

RB-0614

SCALE 1/2"=1'-0" 334-0614-39

294359E REV 6

IP7_030078