ITEM	DESCRIPTION	PC NO.	QTY.
1	STEEL HEX NUT 1/2-13	11-1610-07	8
2	3/8-16 X 3/4 HHMS	11-1586-03	6
3	3/8-16 BELLEVILLE WASHER NUT	11-1622-01	6
4	1/2-13 X 3" CARRIAGE BOLT	11-1600-07	8
5	1/2 x 3 BELLEVILLE WASHER	11-C-1824-01	8

THE SPLICE PLATES ARE DESIGNED TO SHIP ATTACHED TO THE THRU BUS IN A VERTICAL POSITION. THE LAMINATIONS SHALL BE LOCATED AS SHOWN IN THE DETAIL BELOW.

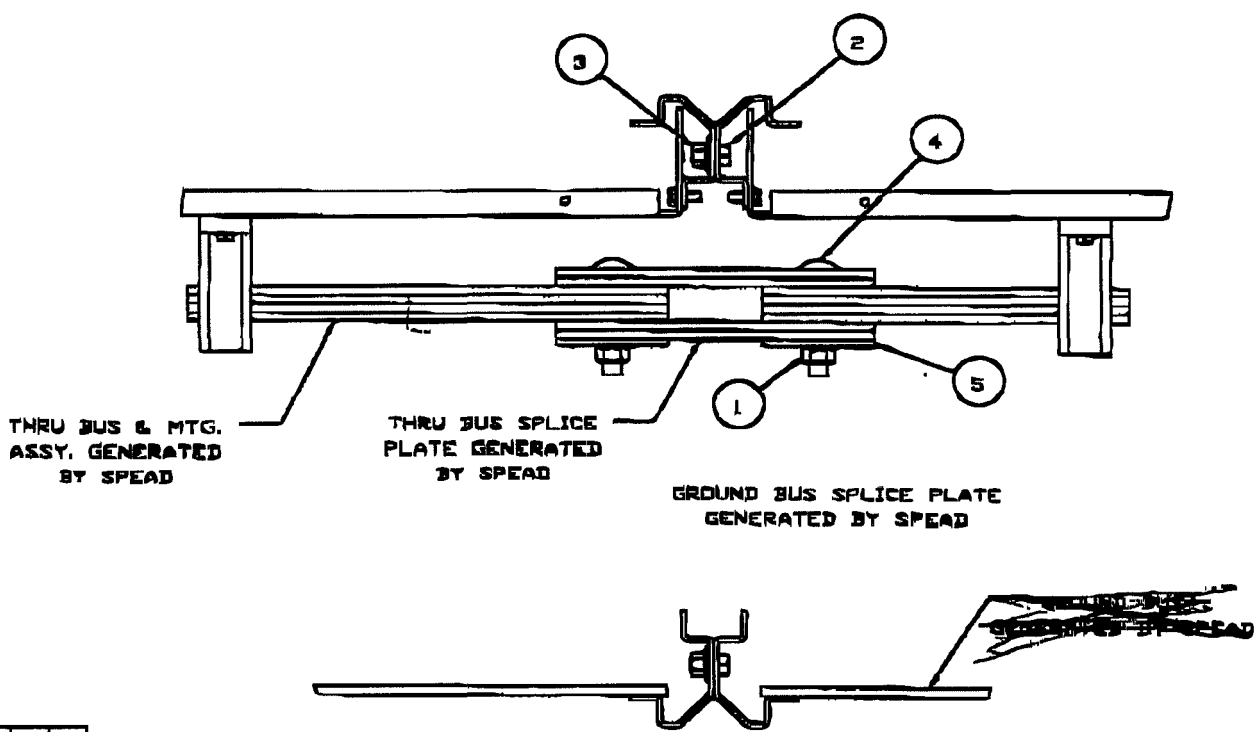

NUT & LOCK WASHER ARE PROVIDED FOR THOSE INSTANCES WHERE NEUTRALBONDING USES SPLICE PLATE MOLE

Revisions: 01C-302A 7-01-00

Tolerances: .XX ± .030 .XXX ± .019 Angular ± 2° Units are in inches	Confidential - property of Siemens Energy & Automation, Inc. Distribution Products Division	THRU BUS SPLICE HDWR KIT (3) & (4) LAMINATIONS			Dwg No 12-D-5157-03		0
		Dwn: JAJ	6-05-00	Chk: RHR 6-15-00	Apvd: JJ	7-01-00	Sht 1 of 1

Bruce 425-864-4414

FRIDAY.12.2003 06.1:50PM 13:SIEMENS ANIERFAX6600 NO.748 P.1 PAGE 2

IP7_025639

FMAY.12.2003 05 1:50PM 13 SIEMENS ANIERFAX6500 NO.748 P.2 PAGE 1

ITEM	DESCRIPTION	PC. NO.	QTY.
1	THRU BUS SUPPORT CROSS CHANNEL	12-D-6000-01	2
2	THRU BUS SUPPORT	12-A-7500-01	2
3	1/4-20 SLOTTED HEX SCREW	11-C-1000-02	8
4	1/4-20 X 1" SHVHSW	11-[illegible]	8

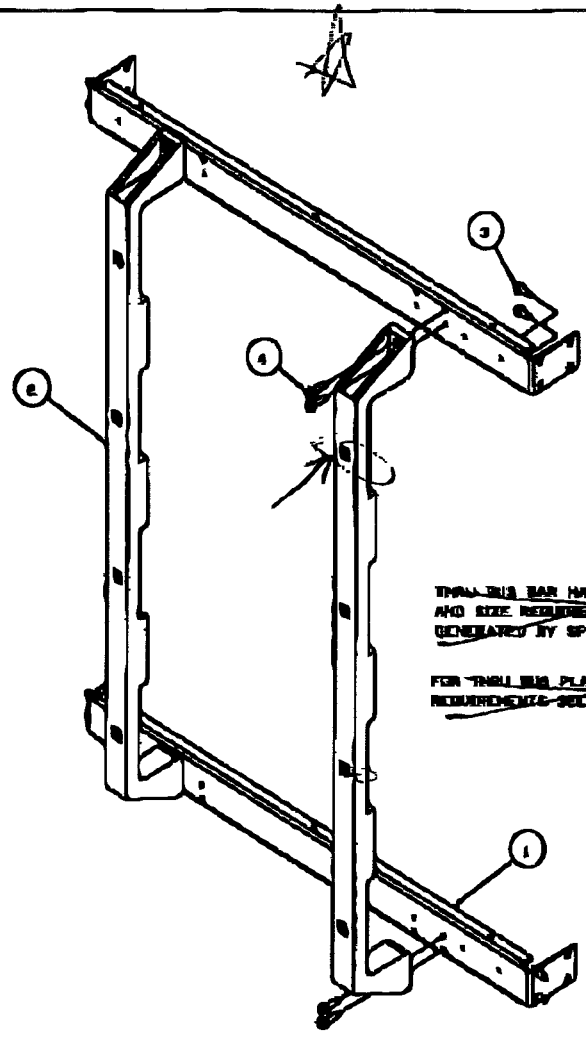

THRU BUS BAR MATERIAL, QUANTITY AND SIZE REQUIREMENTS ARE GENERATED BY SPEAD (SEE REF. TABLE)

FOR THRU BUS PLACEMENT AND HARDWARE REQUIREMENTS SEE 12-A-5004

FOR ALUM. BUS BAR SEE 13-D-6506 OR 13-D-6508
FOR CU. BUS BAR SEE 13-D-6507 OR 13-D-6509

AMPS	DENSITY	MAT'L	No. OF BARS	SIZE
600A	65° C A/SQ. "	ALUM.	1 1	1/4 X 3" 1/4 X 4"
800A	65° C A/SQ. "	ALUM.	1 1	1/4 X 3" 1/4 X 5"
1000A	65° C A/SQ. "	ALUM.	1 2	1/4 X 3" 1/4 X 5"
1200A	65° C A/SQ. "	ALUM.	1 2	1/4 X 3" 1/4 X 4"
1600A	65° C A/SQ. "	ALUM.	1 2	1/4 X 4" 1/4 X 5"
2000A	65° C A/SQ. "	ALUM.	1 3	1/4 X 5" 1/4 X 4"
2500A	65° C A/SQ. "	ALUM.	2 3	1/4 X 5" 1/4 X 5"
3000A	65° C A/SQ. "	ALUM.	3 4	1/4 X 5" 1/4 X 4"
4000A	65° C A/SQ. "	ALUM.	5 5	1/4 X 5" 1/4 X 5"
600A	65° C A/SQ. "	CU.	1 1	1/4 X 3" 1/4 X 3"
800A	65° C A/SQ. "	CU.	1 1	1/4 X 3" 1/4 X 4"
1000A	65° C A/SQ. "	CU.	1 1	1/4 X 3" 1/4 X 4"
1200A	65° C A/SQ. "	CU.	1 1	1/4 X 3" 1/4 X 5"
1600A	65° C A/SQ. "	CU.	1 2	1/4 X 3" 1/4 X 4"
2000A	65° C A/SQ. "	CU.	1 2	1/4 X 4" 1/4 X 4"
2500A	65° C A/SQ. "	CU.	2 2	1/4 X 4" 1/4 X 5"
3000A	65° C A/SQ. "	CU.	2 3	1/4 X 5" 1/4 X 4"
4000A	65° C A/SQ. "	CU.	4 4	1/4 X 4" 1/4 X 4"

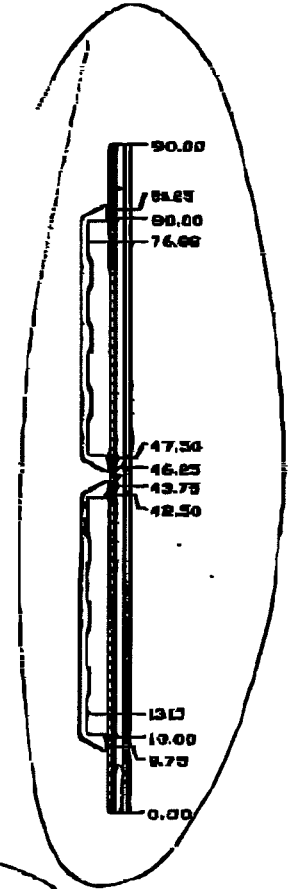

Revisions	Tolerances	Confidential – property of Siemens Energy & Automation, Inc. Distribution Products Division	THRU BUS MOUNTING ASSY. 6x THRU 30"D X 30"W	Dwg No 12-D-5000-05	Rev 0
01C-302A 2-1-00	Units are in inches		Dwn JAJ 8-30-99 Chk GHR 1-18-00	Appvd JJ 2-1-00	Sheet 1 of 1

IP7_025640