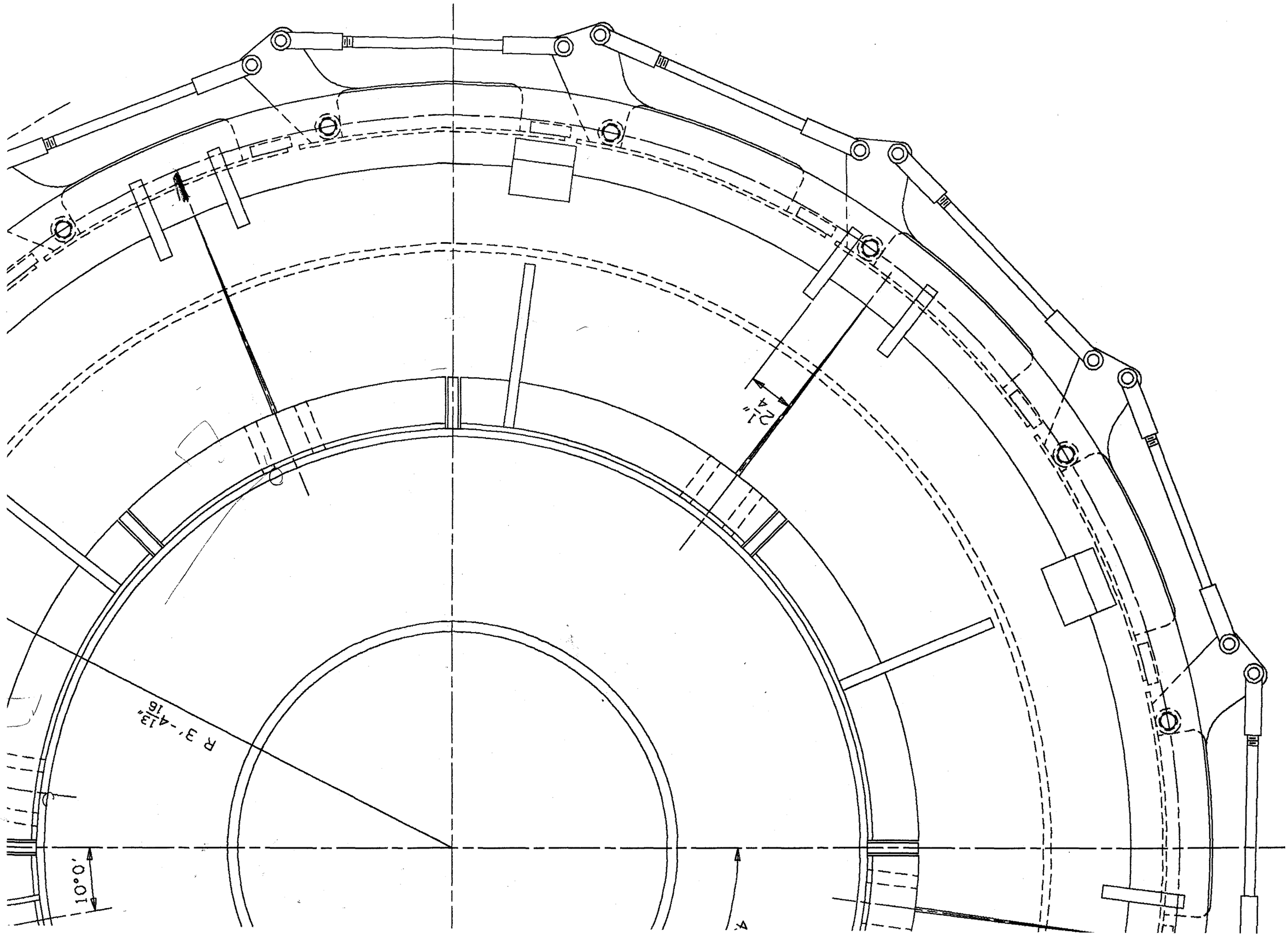

IP7_003995

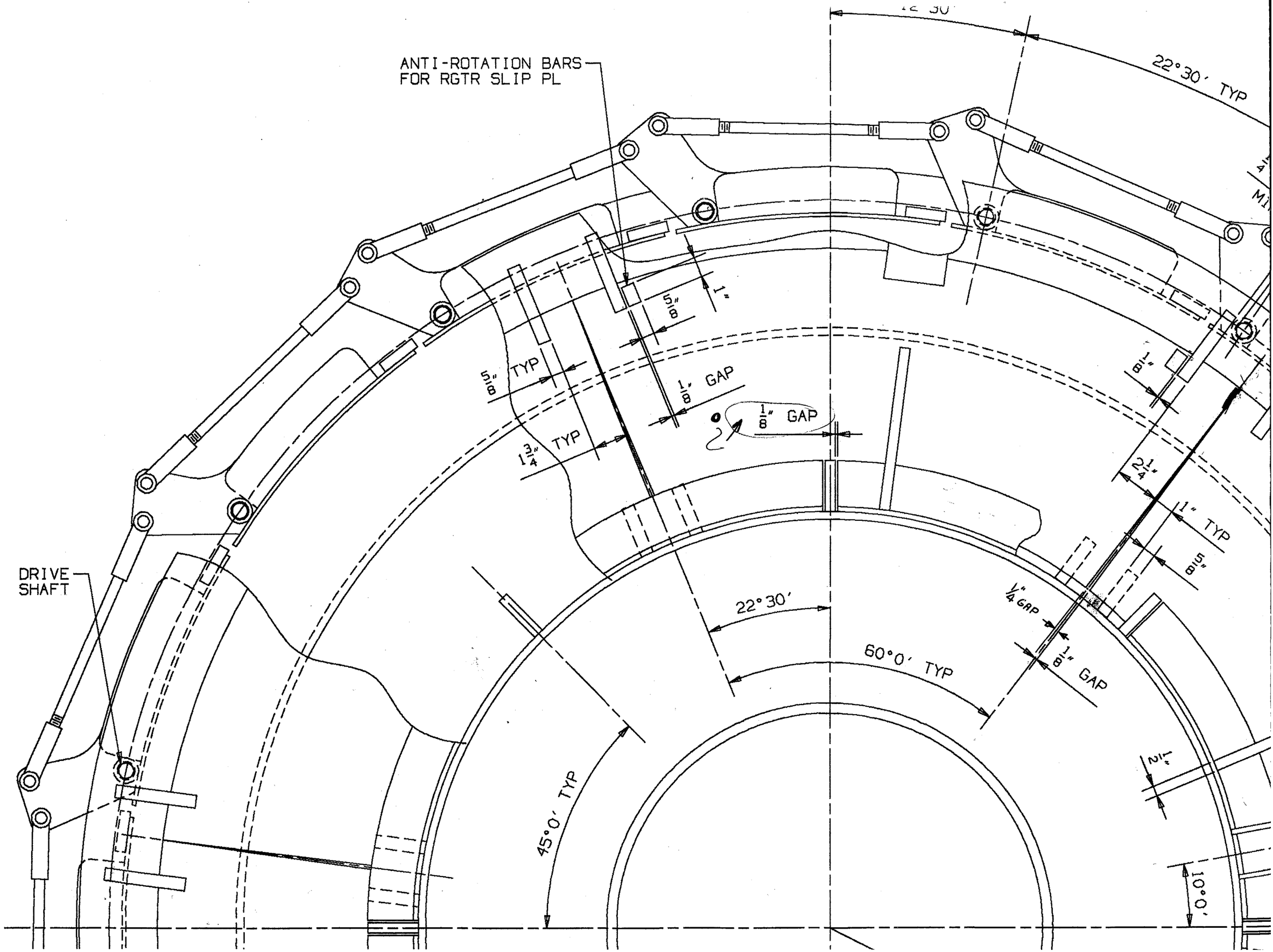
ANTI-ROTATION BARS
FOR RGTR SLIP PL
22°30' TYP
DRIVE
SHAFT
5/8" TYP
1 3/4" TYP
5/8"
1"
1/8" GAP
1/8" GAP
22°30'
60°0' TYP
45°0' TYP
1/4" GAP
1/8" GAP
2 1/4"
1" TYP
5/8"
1/8"
10°0'

IP7_003996

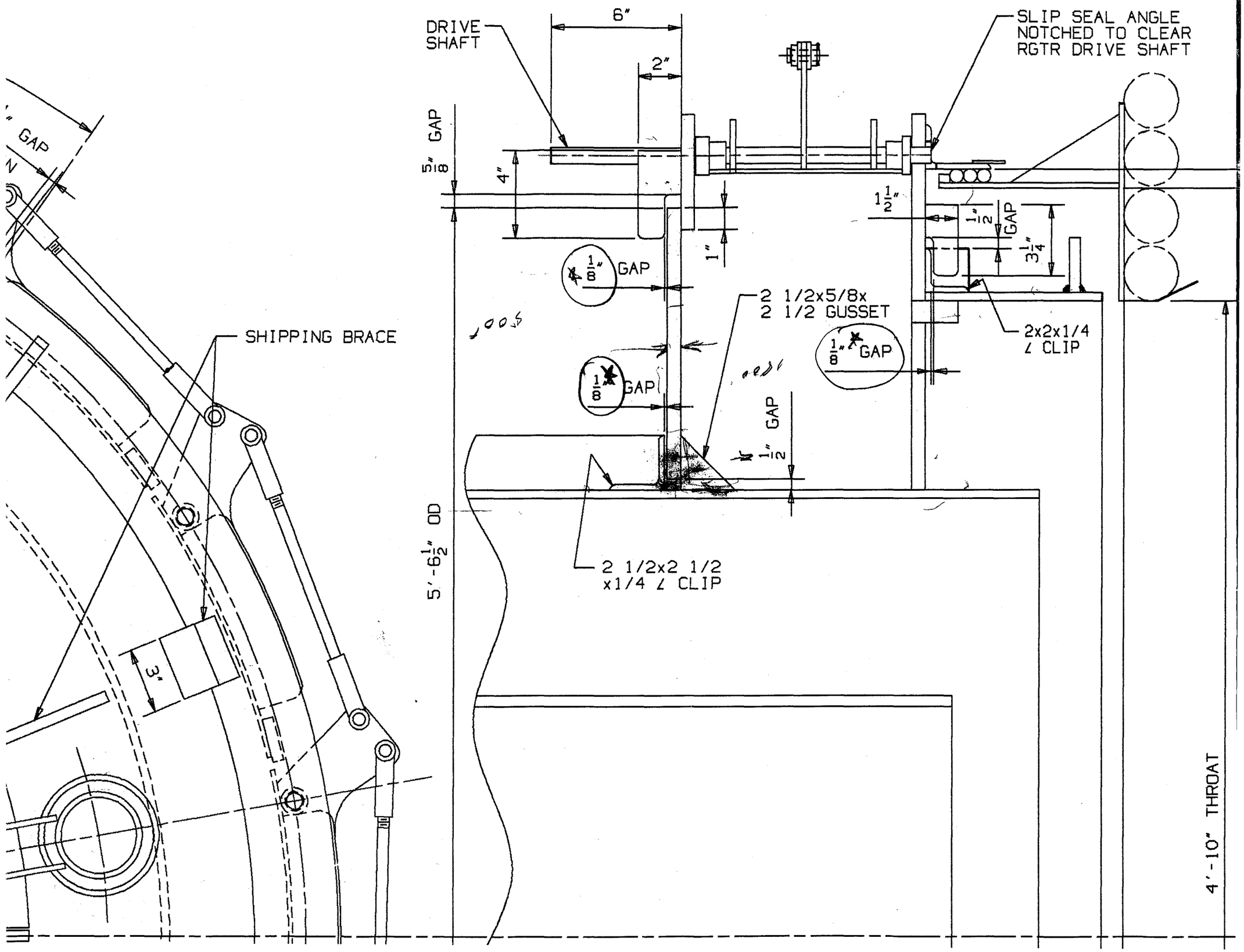
DRIVE SHAFT
6"
2"
SLIP SEAL ANGLE NOTCHED TO CLEAR RGTR DRIVE SHAFT
GAP
5 1/8"
4"
1"
1 1/2"
1/2" GAP
3 1/4"
1/8" GAP
2 1/2x5/8x 2 1/2 GUSSET
2x2x1/4 ∠ CLIP
1/8" GAP
1/8" GAP
1/2" GAP
5'-6 1/2" OD
2 1/2x2 1/2 x1/4 ∠ CLIP
SHIPPING BRACE
3"
4'-10" THROAT

IP7_003997

IP7_003998

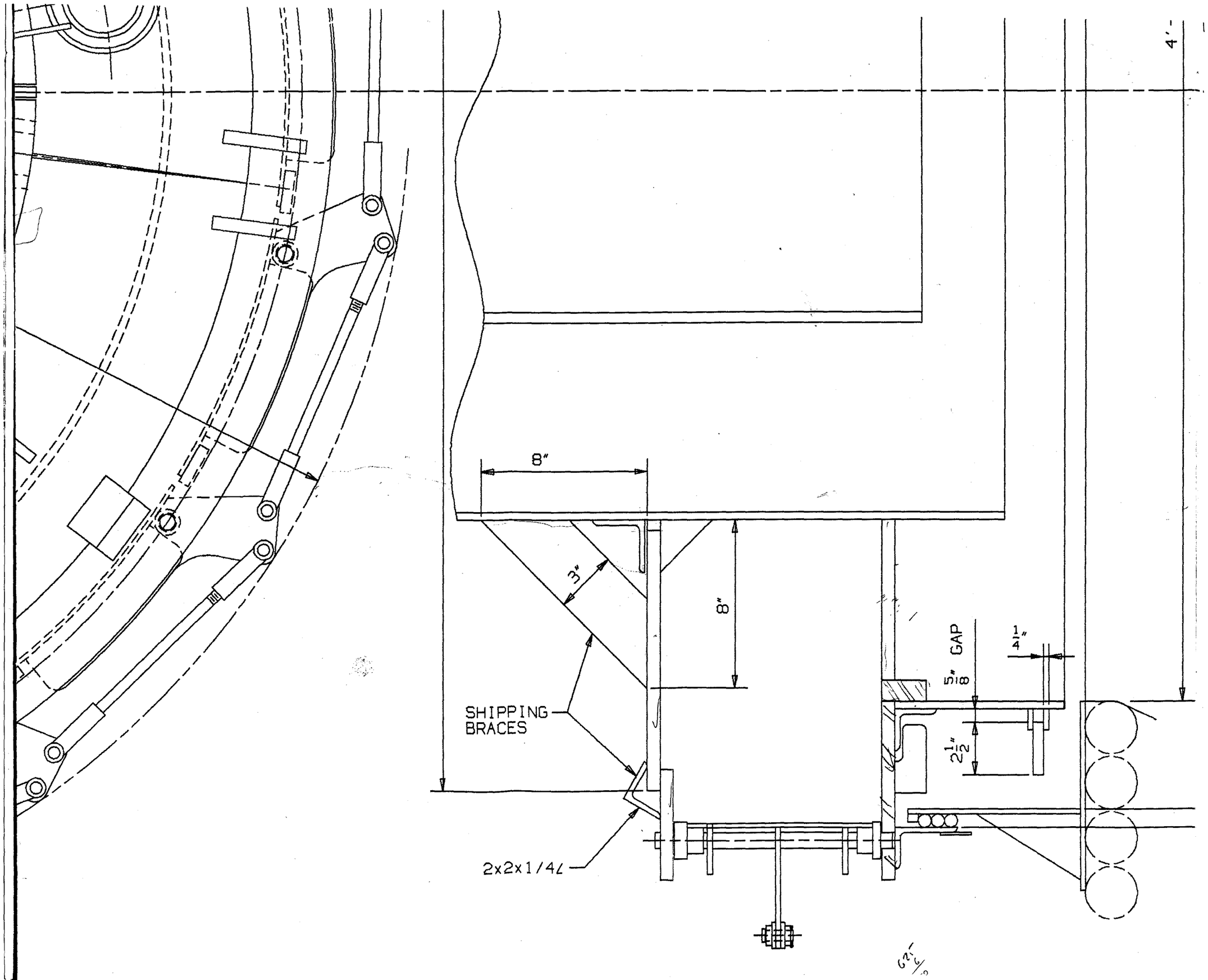

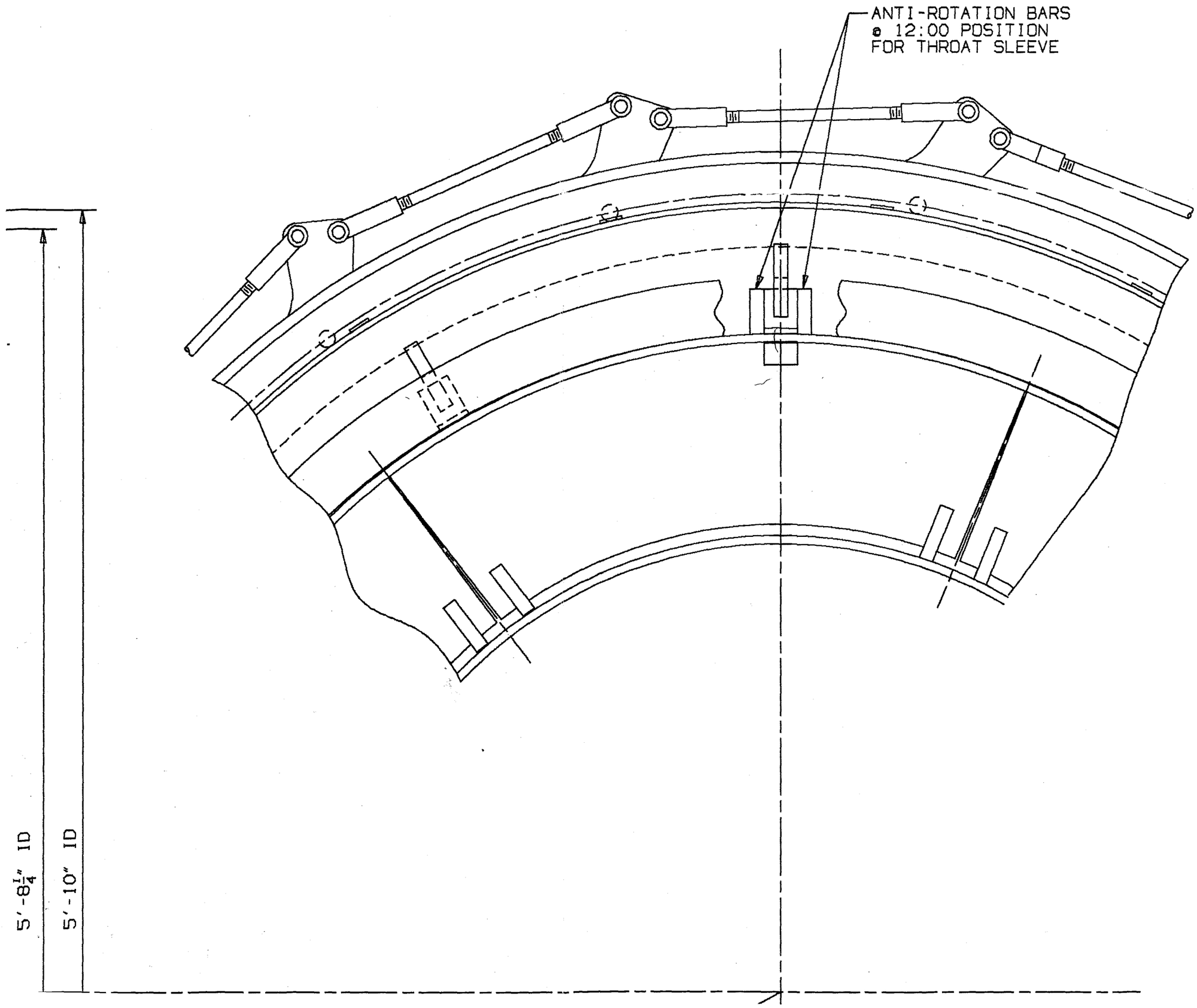
ANTI-ROTATION BARS
@ 12:00 POSITION
FOR THROAT SLEEVE
5'-8¼" ID
5'-10" ID

IP7_003999

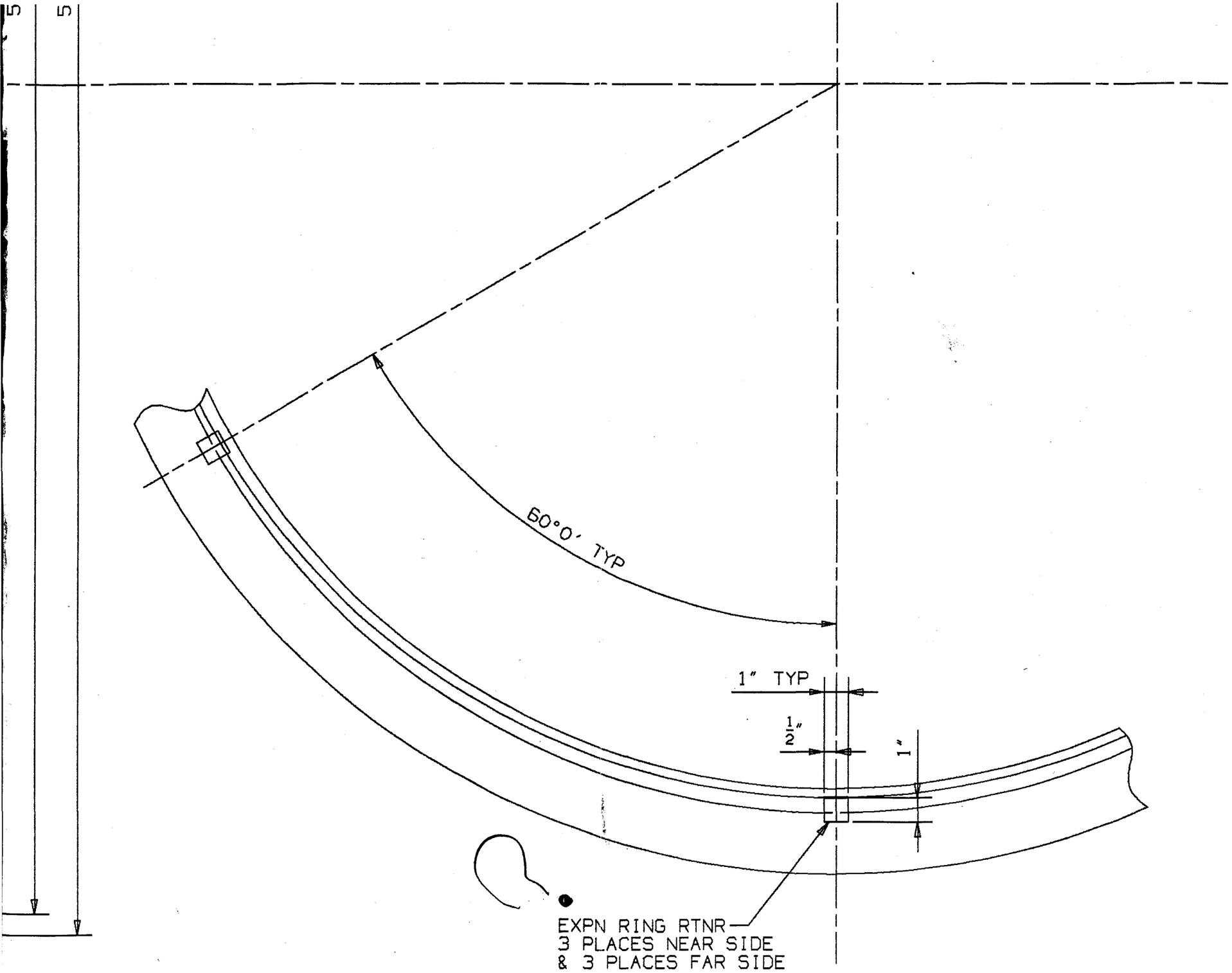

334-0614-39-75
SK-100291 TDC/LE