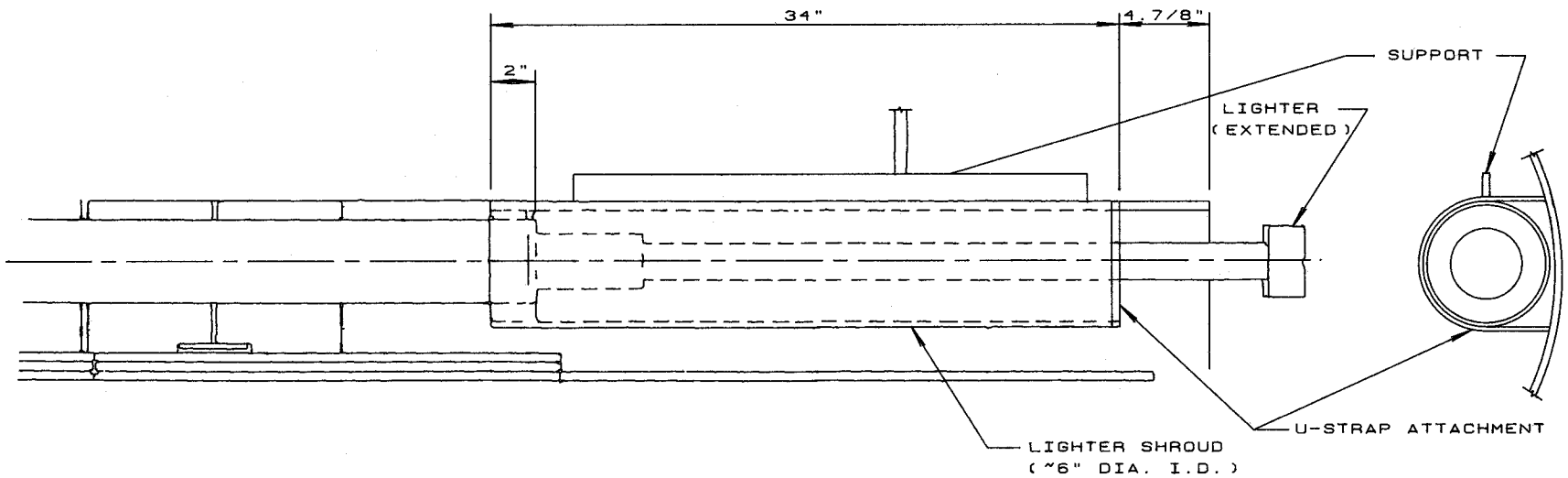

DRAWING TITLE LIGHTER SHROUD	IPP INTERMOUNTAIN POWER SERVICE CORPORATION
REF. DWGS	BRUSH WELLMAN ROAD DELTA, UTAH

NO.	DATE	BY	REVISION

DRAWN BW	DATE 8/28/91	CH'D	DATE
W.O. NO.		SHT NO. 1 OF 1	

IP7_003417