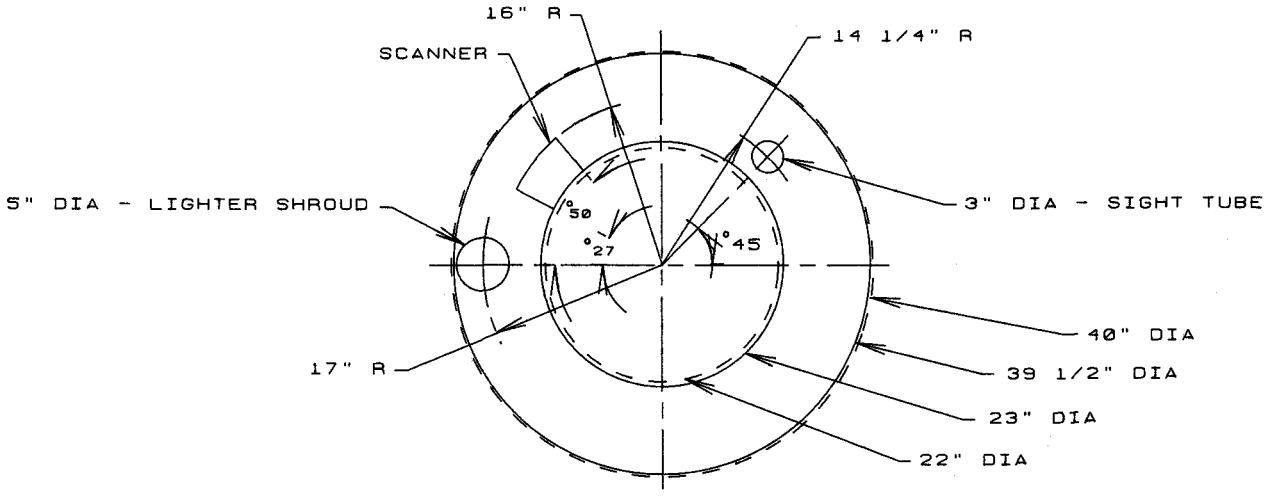

CCW STABILIZER

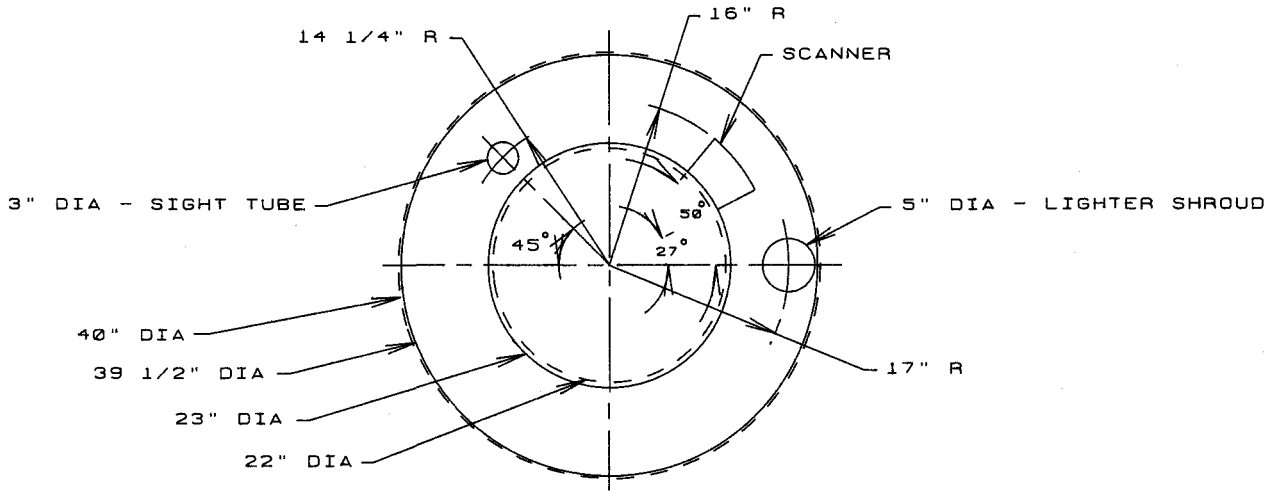

CW STABILIZER

FLAME STABILIZER CUTOUT TEMPLATE

NOTE: LOOKING AT BURNER FRONT (INTO BOILER)