AMPAD 22-141 50 SHEETS
22-142 100 SHEETS
22-144 200 SHEETS

SCANNER FIELD OF VIEW

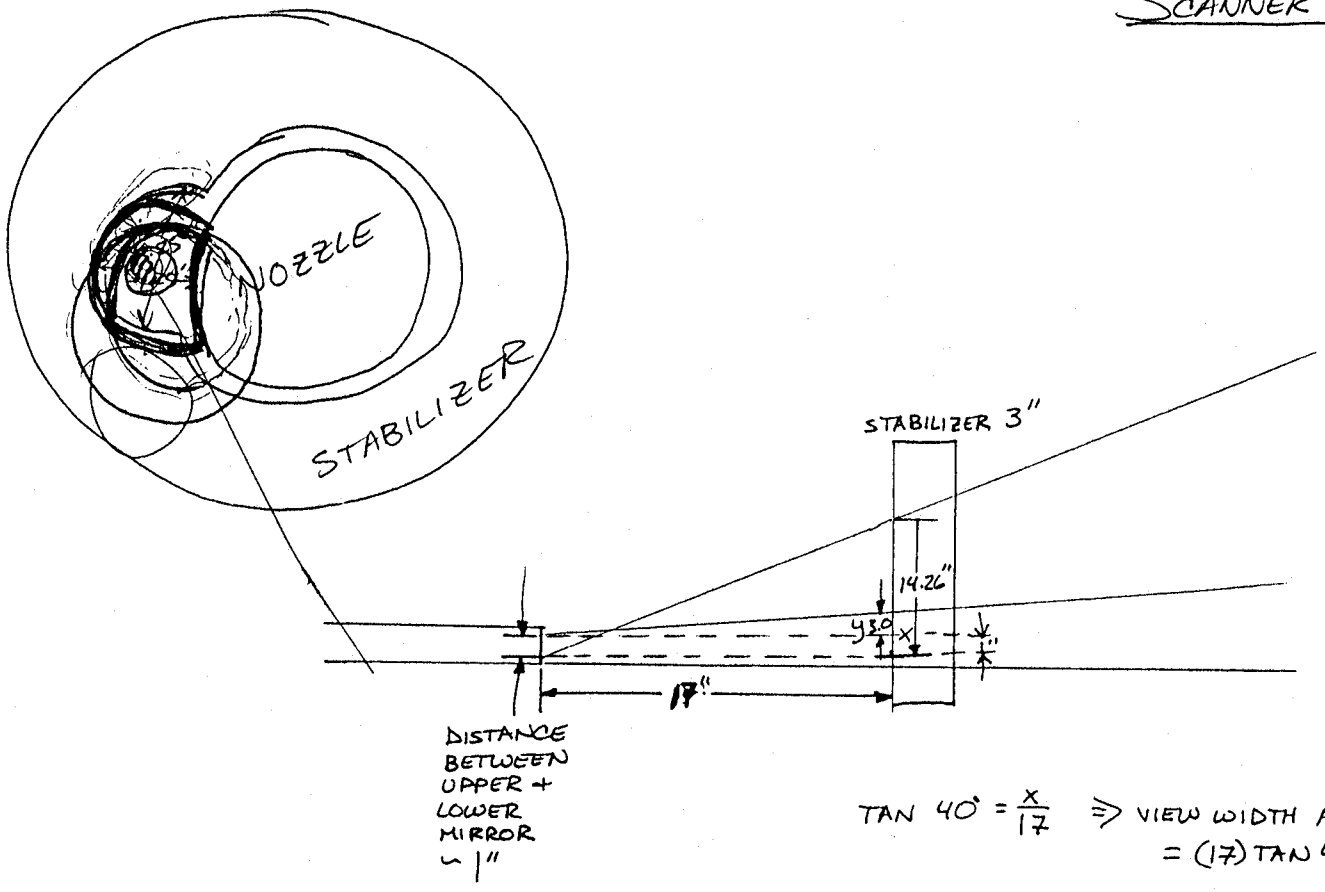

14.26
- 4.0 (3.0 + 1.0) 10° ANGLE MIRROR OFFSET
$\boxed{10.26''}$
AT INNER SURFACE OF STABILIZER

$\tan 40° = \frac{x}{17}$ ⇒ VIEW WIDTH AT STABILIZER FOR 40° MIRROR
$= (17) \tan 40° = 14.26 = x$

$\tan 10° = \frac{y}{17}$ ⇒ VIEW WIDTH AT STABILIZER FOR 10° MIRROR
$= (17) \tan 10° = 3.00 = y$

EXISTING DIMENSION

8.85 x 5.25

AT FRONT FACE OF STABILIZER (20") FROM MIRRORS
⇒ $(20) \tan 40° = 16.78 = x$

$(20) \tan 10 = 3.52 = y$

⇒ AT OUTER OR FURNACE SIDE
16.78 ⇒ $\boxed{12.26}$

IP7_003399