UNDER SOFTWARE LOCK 08/30/91 10:30:19 U1MAIN

[1191.5		1017.	1138.	802.	1268.	1208.	1031.	[1077
	E	1160.	1220.	1184.	1284.	1071.	1230.	
1045		155.	607.	631.	542.	553.	620.	590.6
	D	941.	1053.	1138.	1085.	1020.	1033.	
1003		572.	564.	596.	594.	598.	551.	579.2
	F	989.	1057.	963.	1053.	1025.	929.	
		578.	598.	579.	609.	606.	623.	598.8
1019	B	925.	1064.	1094.	1073.	1025.	933.	

FORWARD PAGING SGAG09

IP7_003343

U2 Rear

UNDER SOFTWARE LOCK 08/30/91 10:30:47 U1MAIN

987	D	568.	609.	602.	579.	585.	588.	585
		1024.	1029.	1033.	883.	1016.	936.	
		629.	643.	552.	556.	649.	585.	602.3
1000	H	873.	1087.	1074.	985.	998.	984.	
1031	C	565.	607.	588.	582.	575.	613.	588.3
		1007.	991.	1013.	1067.	1031.	1076.	
		572.	593.	603.	536.	595.	563.	577.0
1018	G	931.	1051.	987.	1136.	1060.	943.	

FORWARD PAGING SGAG10

100

1000 7/5

580 7/5 ave

589.25

IP7_003344

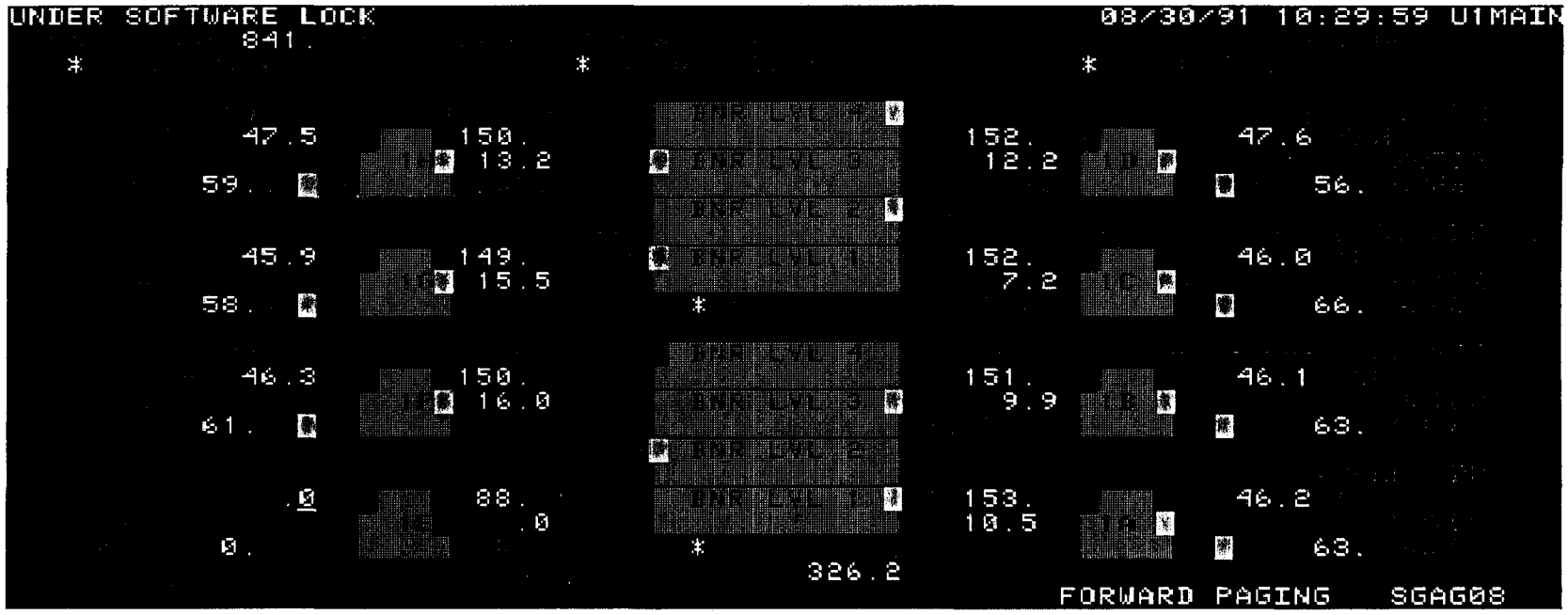
UNDER SOFTWARE LOCK
08/30/91 10:29:59 U1MAIN
841.
47.5
59.
150.
13.2
152.
12.2
47.6
56.
45.9
58.
149.
15.5
152.
7.2
46.0
66.
46.3
61.
150.
16.0
151.
9.9
46.1
63.
.0
0.
88.
.0
153.
10.5
46.2
63.
326.2
FORWARD PAGING
SGAG08

IP7_003345

UNDER SOFTWARE LOCK 08/30/91 10:30:19 U1MAIN

1017.	1138.	802.	1268.	1208.	1031.
1160.	1220.	1184.	1284.	1071.	1230.
155.	607.	631.	542.	553.	620.
941.	1053.	1138.	1085.	1020.	1033.
572.	564.	596.	594.	598.	551.
989.	1057.	963.	1053.	1025.	929.
578.	598.	579.	609.	606.	623.
925.	1064.	1094.	1073.	1025.	933.

FORWARD PAGING SGAG09

UNDER SOFTWARE LOCK 08/30/91 10:30:47 U1MAIN

568.	609.	602.	579.	585.	588.
1024.	1029.	1033.	883.	1016.	936.
629.	643.	552.	556.	649.	585.
873.	1087.	1074.	985.	998.	984.
565.	607.	588.	582.	575.	613.
1007.	991.	1013.	1067.	1031.	1076.
572.	593.	603.	536.	595.	563.
931.	1051.	987.	1136.	1060.	943.

FORWARD PAGING SGAG10

IP7_003347

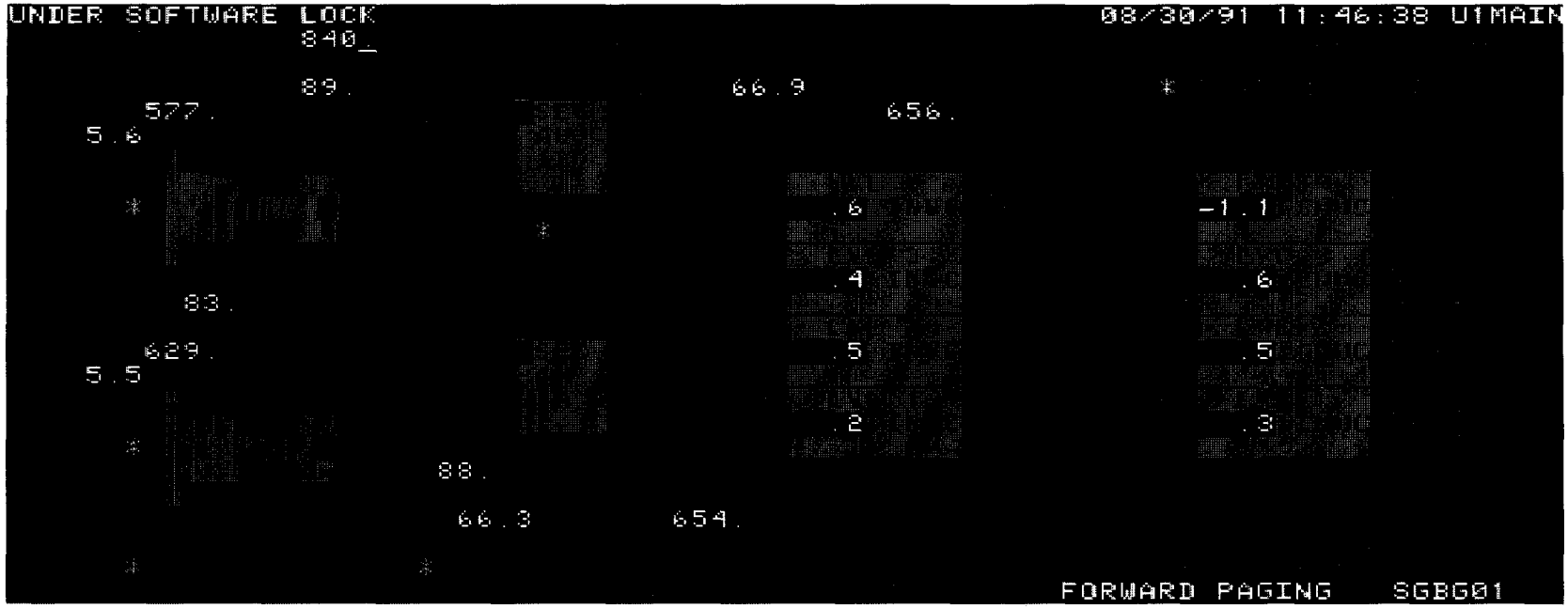
UNDER SOFTWARE LOCK
08/30/91 11:46:38 U1MAIN
840_
89.
66.9
577.
656.
5.6
.6
-1.1
.4
.6
83.
629.
.5
.5
5.5
.2
.3
88.
66.3
654.
FORWARD PAGING SGBG01

IP7_003348

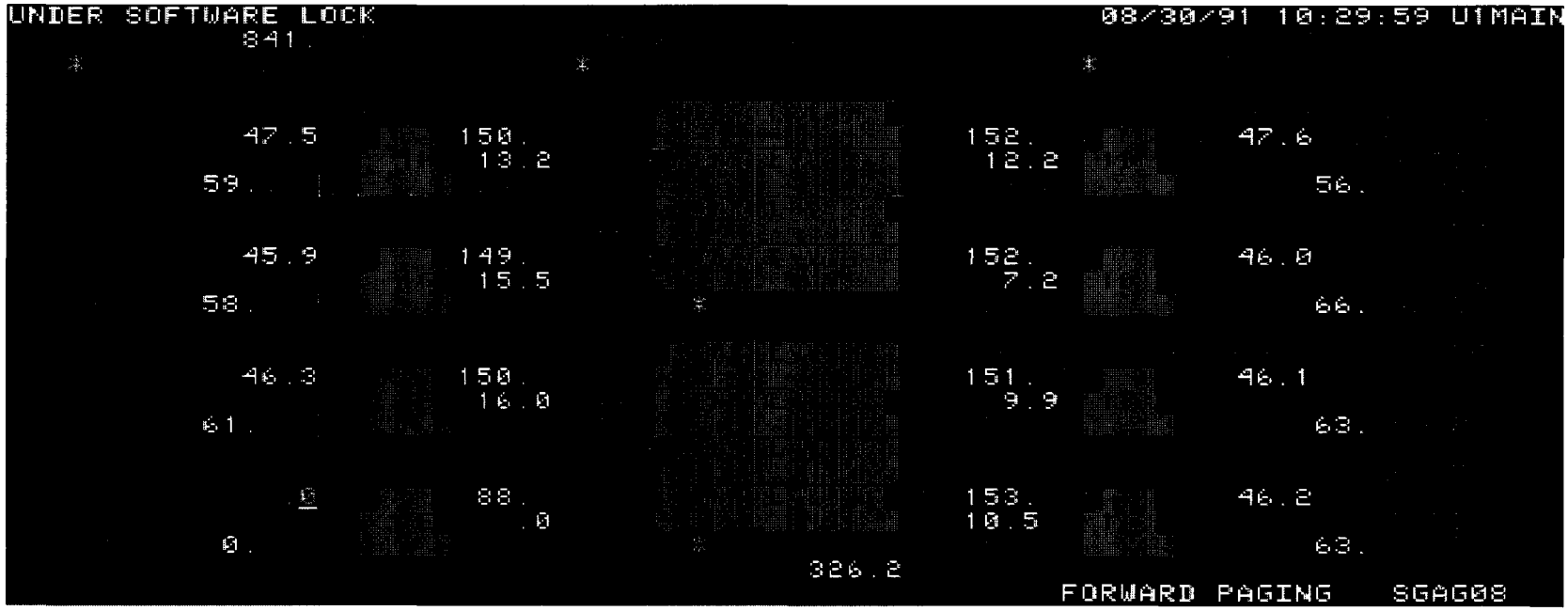
UNDER SOFTWARE LOCK
08/30/91 10:29:59 U1MAIN
841.
47.5
150.
13.2
59.
152.
12.2
47.6
56.
45.9
149.
15.5
58.
152.
7.2
46.0
66.
46.3
150.
16.0
61.
151.
9.9
46.1
63.
.0
88.
.0
0.
153.
10.5
46.2
63.
326.2
FORWARD PAGING
SGAG08

IP7_003349

U2 Fro

2 910830-08:31:39

979 E		572.F	568.F	567.F	571.F	538.F	590.F	567
		992.F	996.F	1040.F	904.F	1001.F	941.F	
[1135 A	d/s	904.F	954.F	1019.F	1011.F	1085.F	948.F	[986.8
		1103.F	1199.F	978.F	1156.F	1228.F	1147.F	
907 F		556.F	555.F	568.F	544.F	588.F	569.F	563
		980.F	853.F	934.F	939.F	906.F	830.F	
[1196 B	d/s	834.F	834.F	875.F	902.F	920.F	881.F	[874
		1153.F	1238.F	1193.F	1226.F	1217.F	1149.F	565.5

988

IP7_003350

U2 B r

2 910830-08:31:59

1008	598.F	560.F	636.F	570.F	594.F	566.F	587.3
	991.F	989.F	1073.F	980.F	1032.F	984.F	
1058	594.F	616.F	558.F	598.F	603.F	538.F	584.5
	930.F	1006.F	1053.F	1218.F	1055.F	1006.F	
999	577.F	570.F	577.F	523.F low	621.F	584.F	575.3
	935.F	1007.F	980.F	1084.F	991.F	1001.F	
981	526.F low	541.F	558.F	573.F	539.F low	593.F	555.3
	929.F	992.F	1027.F	1066.F	972.F	901.F	

575.6

850
~~980~~ 1220

572.2

IP7_003351

2 910830-08:32:12

UNIT LOAD 842. MW SGAG08 SYSTEM - FUEL PG 1 OF 6

PRIMARY AIR | BURNER TEMPS | FUEL OIL

COAL FDR TPH 52.1 MOTOR AMPS 58. — 1H — 150. F 17.5 INWC

COAL FDR TPH 52.7 MOTOR AMPS 62. — 1G — 150. F 19.3 INWC

COAL FDR TPH 50.7 MOTOR AMPS 60. — 1F — 150. F 18.4 INWC

COAL FDR TPH 51.5 MOTOR AMPS 59. — 1E — 150. F 17.2 INWC

BNR LVL 4
BNR LVL 3
BNR LVL 2
BNR LVL 1
REAR

BNR LVL 4
BNR LVL 3
BNR LVL 2
BNR LVL 1
FRONT

149. F 14.8 INWC — 1D — COAL FDR 52.3 TPH MOTOR 60. AMPS

148. F 14.5 INWC — 1C — COAL FDR 52.5 TPH MOTOR 61. AMPS

90. F .0 INWC — 1B — COAL FDR TPH MOTOR 0. AMPS

90. F -.0 INWC — 1A — COAL FDR TPH MOTOR 0. AMPS

TOTAL FUEL 314.1 TPH

IP7_003352

2 910830-08:31:39

572.F	568.F	567.F	571.F	538.F	590.F
992.F	996.F	1040.F	904.F	1001.F	941.F
904.F	954.F	1019.F	1011.F	1085.F	948.F
1103.F	1199.F	978.F	1156.F	1228.F	1147.F

556.F	555.F	568.F	544.F	588.F	569.F
980.F	853.F	934.F	939.F	906.F	830.F
834.F	834.F	875.F	902.F	920.F	881.F
1153.F	1238.F	1193.F	1226.F	1217.F	1149.F

IP7_003353

2 910830-08:31:59

598.F	560.F	636.F	570.F	594.F	566.F
991.F	989.F	1073.F	980.F	1032.F	984.F
594.F	616.F	558.F	598.F	603.F	538.F
930.F	1006.F	1053.F	1218.F	1055.F	1006.F
577.F	570.F	577.F	523.F	621.F	584.F
935.F	1007.F	980.F	1084.F	991.F	1001.F
528.F	541.F	558.F	573.F	539.F	593.F
929.F	992.F	1027.F	1066.F	972.F	901.F

IP7_003354

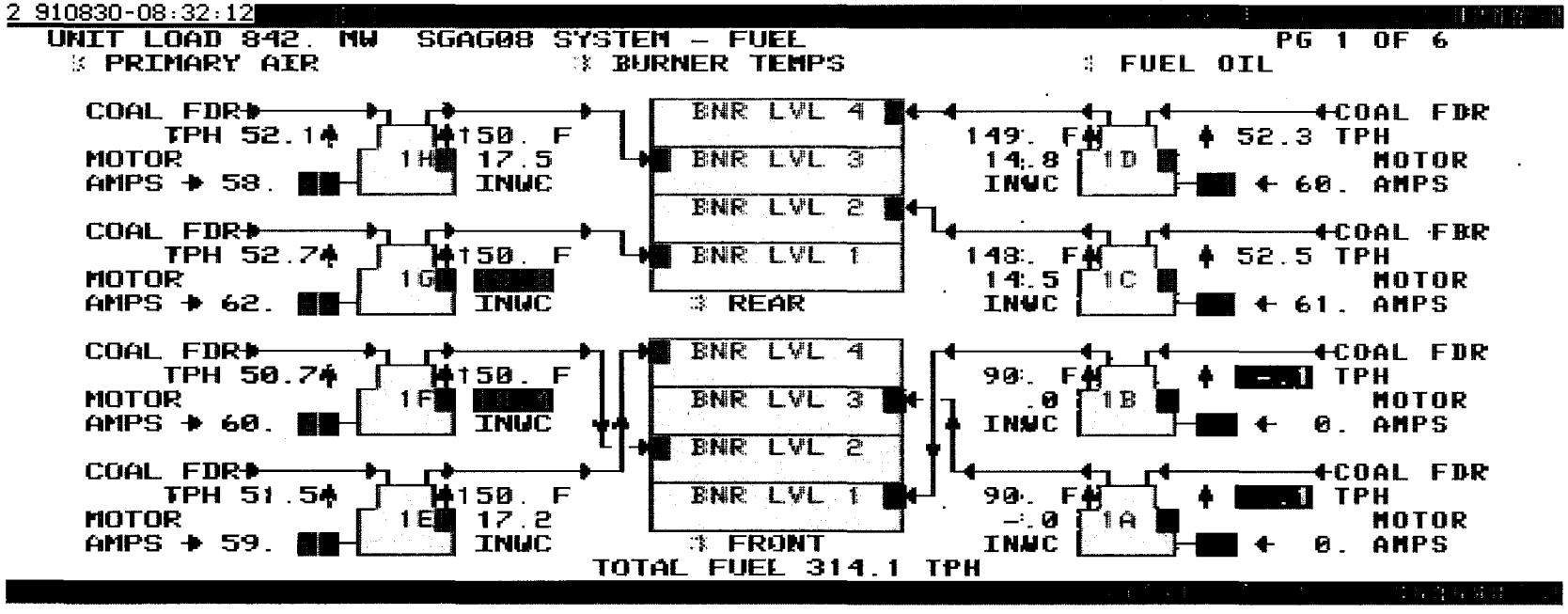
2 910830-08:32:12
UNIT LOAD 842. MW SGAG08 SYSTEM - FUEL
PG 1 OF 6
PRIMARY AIR
BURNER TEMPS
FUEL OIL
COAL FDR
TPH 52.1
MOTOR
AMPS 58.
1H
150. F
17.5
INWC
COAL FDR
TPH 52.7
MOTOR
AMPS 62.
1G
150. F
INWC
COAL FDR
TPH 50.7
MOTOR
AMPS 60.
1F
150. F
INWC
COAL FDR
TPH 51.5
MOTOR
AMPS 59.
1E
150. F
17.2
INWC
BNR LVL 4
BNR LVL 3
BNR LVL 2
BNR LVL 1
REAR
BNR LVL 4
BNR LVL 3
BNR LVL 2
BNR LVL 1
FRONT
149. F
14.8
INWC
1D
COAL FDR
52.3 TPH
MOTOR
60. AMPS
148. F
14.5
INWC
1C
COAL FDR
52.5 TPH
MOTOR
61. AMPS
90. F
.0
INWC
1B
COAL FDR
TPH
MOTOR
0. AMPS
90. F
INWC
1A
COAL FDR
TPH
MOTOR
0. AMPS
TOTAL FUEL 314.1 TPH

IP7_003355

1.5 ave

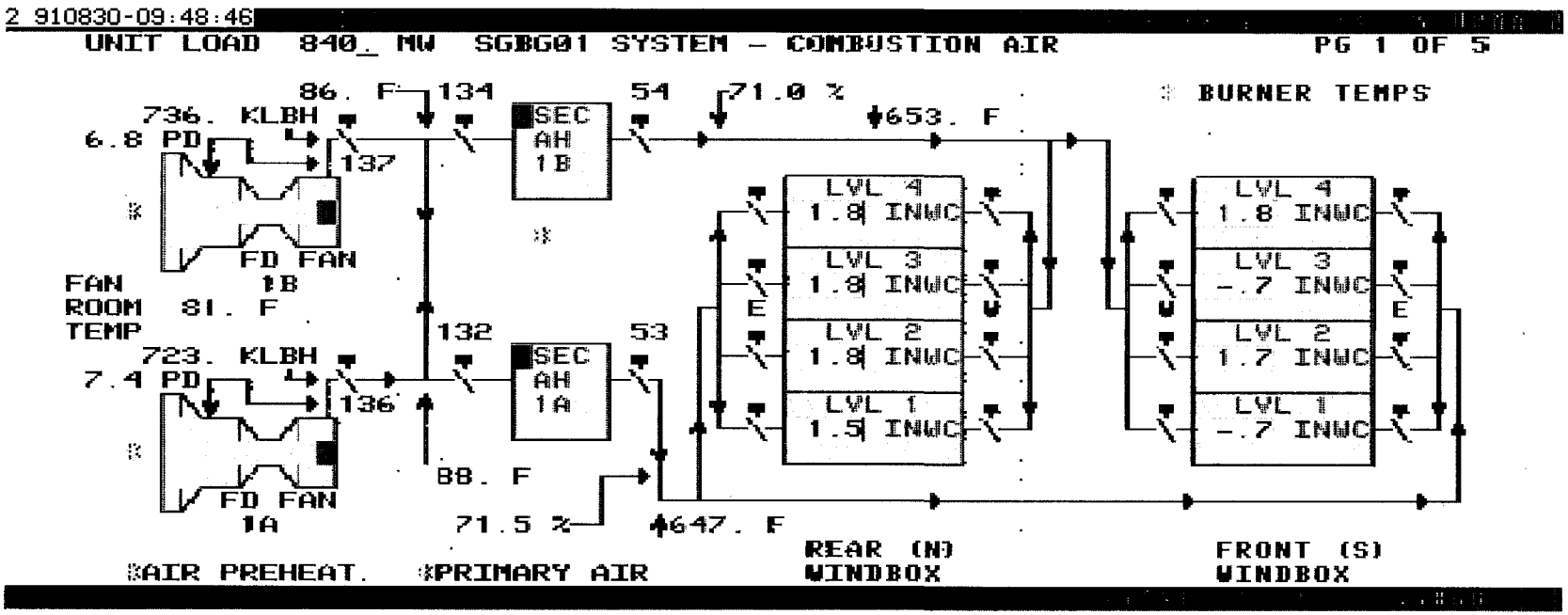

IP7_003356