AMPAD 22-141 50 SHEETS
22-142 100 SHEETS
22-144 200 SHEETS

SCANNER FIELD OF VIEW

Housing to Stabilizer 19"
Front 21½"
Housing Length 7½"
Scanner length 10⅝"
10 9¼"

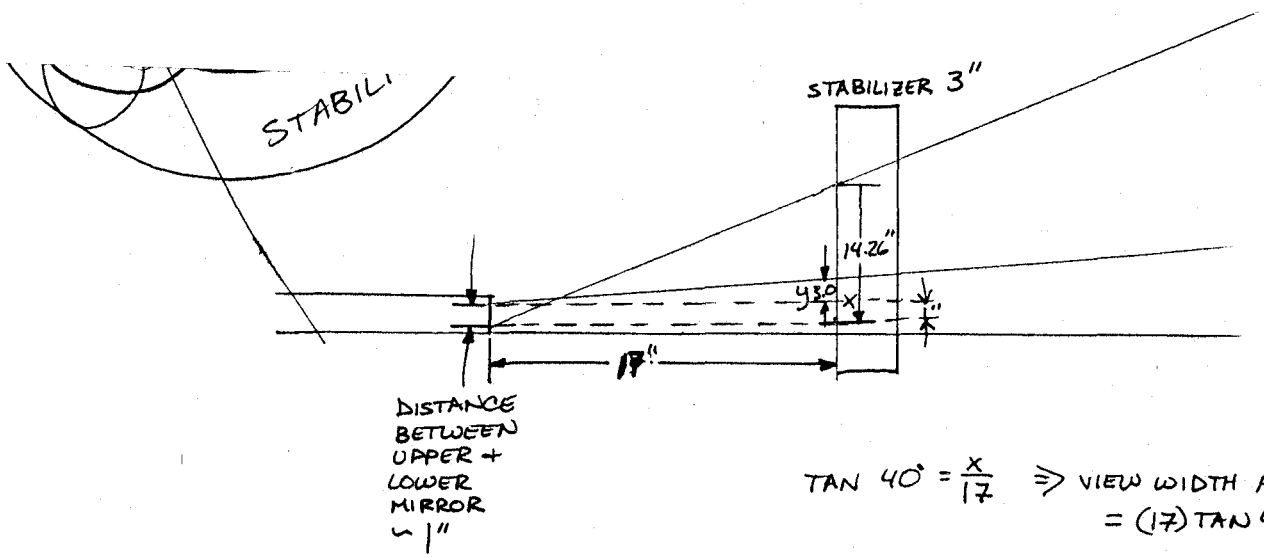

14.26
- 4.0 (3.0 + 1.0) 10° ANGE MIRROR OFFSET
$\boxed{10.26''}$
AT INNER SURFACE OF STABILIZER

$\tan 40° = \frac{x}{17}$ ⇒ VIEW WIDTH AT STABILIZER FOR 40° MIRROR
$= (17) \tan 40° = 14.26 = x$

$\tan 10° = \frac{y}{17}$ ⇒ VIEW WIDTH AT STABILIZER FOR 10° MIRROR
$= (17) \tan 10° = 3.00 = y$

EXISTING DIMENSION
8.85 x 5.25

AT FRONT FACE OF STABILIZER (20") FROM MIRRORS
⇒ $(20) \tan 40° = 16.78 = x$

$(20) \tan 10 = 3.52 = y$

⇒ AT OUTER OR FURNACE SIDE
16.78 ⇒ $\boxed{12.26}$

AMPAD 22-141 50 SHEETS
22-142 100 SHEETS
22-144 200 SHEETS

SCANNER FIELD OF VIEW

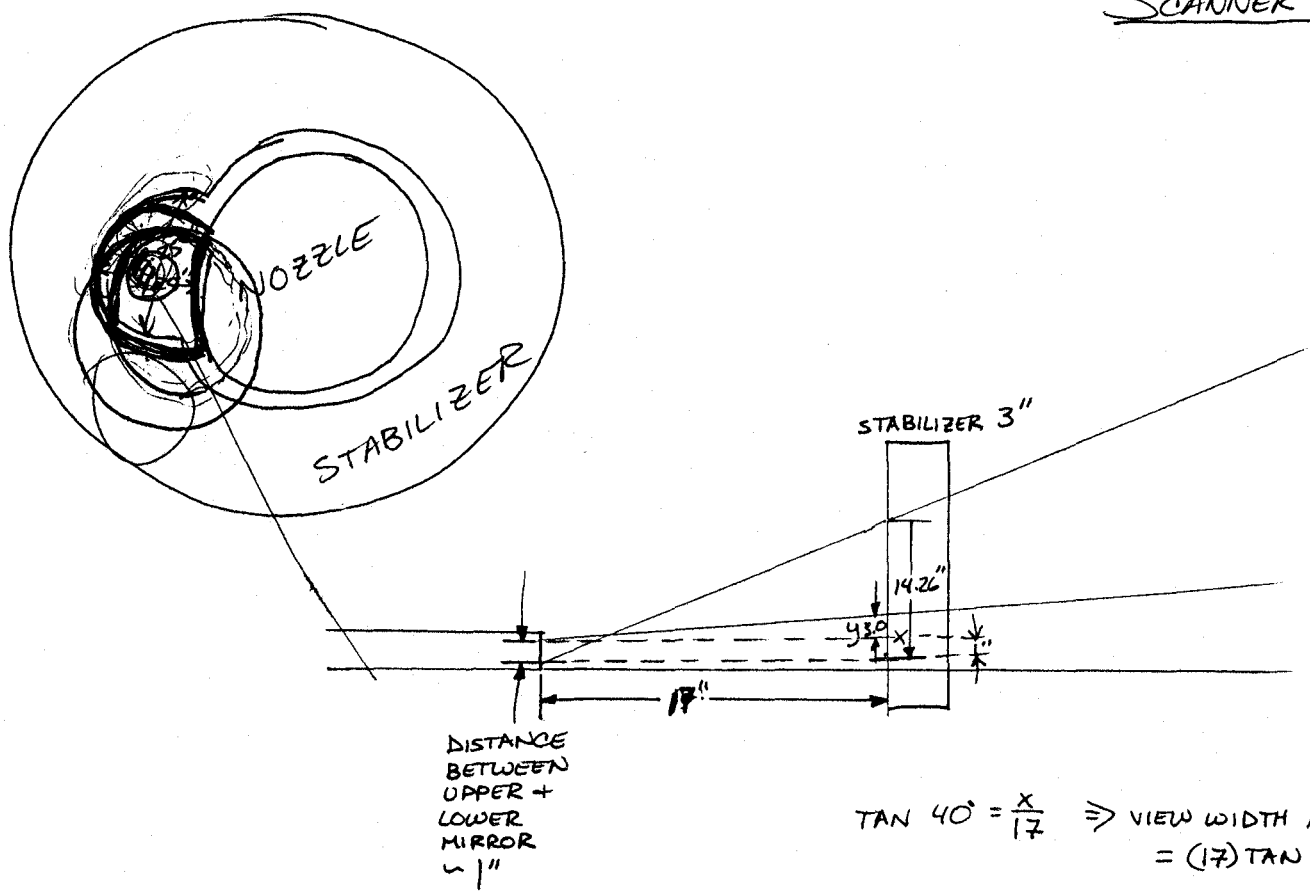

14.26
- 4.0 (3.0 + 1.0) 10° ANGE MIRROR OFFSET
10.26"
AT INNER SURFACE OF STABILIZER

$\tan 40° = \frac{x}{17}$ ⇒ VIEW WIDTH AT STABILIZER FOR 40° MIRROR
$= (17) \tan 40° = 14.26 = x$

$\tan 10° = \frac{y}{17}$ ⇒ VIEW WIDTH AT STABILIZER FOR 10° MIRROR
$= (17) \tan 10° = 3.00 = y$

EXISTING DIMENSION

8.85 x 5.25

AT FRONT FACE OF STABILIZER (20") FROM MIRRORS
⇒ $(20) \tan 40° = 16.78 = x$

$(20) \tan 10 = 3.52 = y$

⇒ AT OUTER OR FURNACE SIDE
16.78 ⇒ 12.26

IP7_003209