Air Flow Test #1 4-21/22 92

Test Start: 11:40 - note reads every 30°

	Board Reads		12:10	2:50	4:40
COAXI001J	CCS Airflow %		70.4%	70.6%	70.7
SGAKS119A	Furn gas press		-0.4	-0.4	-0.4
	Econ gas out		-0.9	-0.8	-0.7
	ID Fan disch P	1A	1.9	1.9	1.9
		1B	1.6	1.7	1.7
		1C	1.8	1.8	1.7
		1D	1.8	1.75	1.7
	ID Suct P	A	-5.5	-5.5	-5.5
		B	-7.5	-7.5	-7.5
	FD Fan disch P	1A	3.8	3.8	3.8
		1B	3.8	3.9	3.8
	Sec Air duct P	E	2.45	2.5	2.5
		W	2.50	2.55	2.5
	Boiler Air flow	A	70%	70%	70%
		B	70%	70%	70%

Test end @ 4:40

Loop 10 group 38, 39, 40, 36

22-141 50 SHEETS
22-142 100 SHEETS
22-144 200 SHEETS
AMPAD

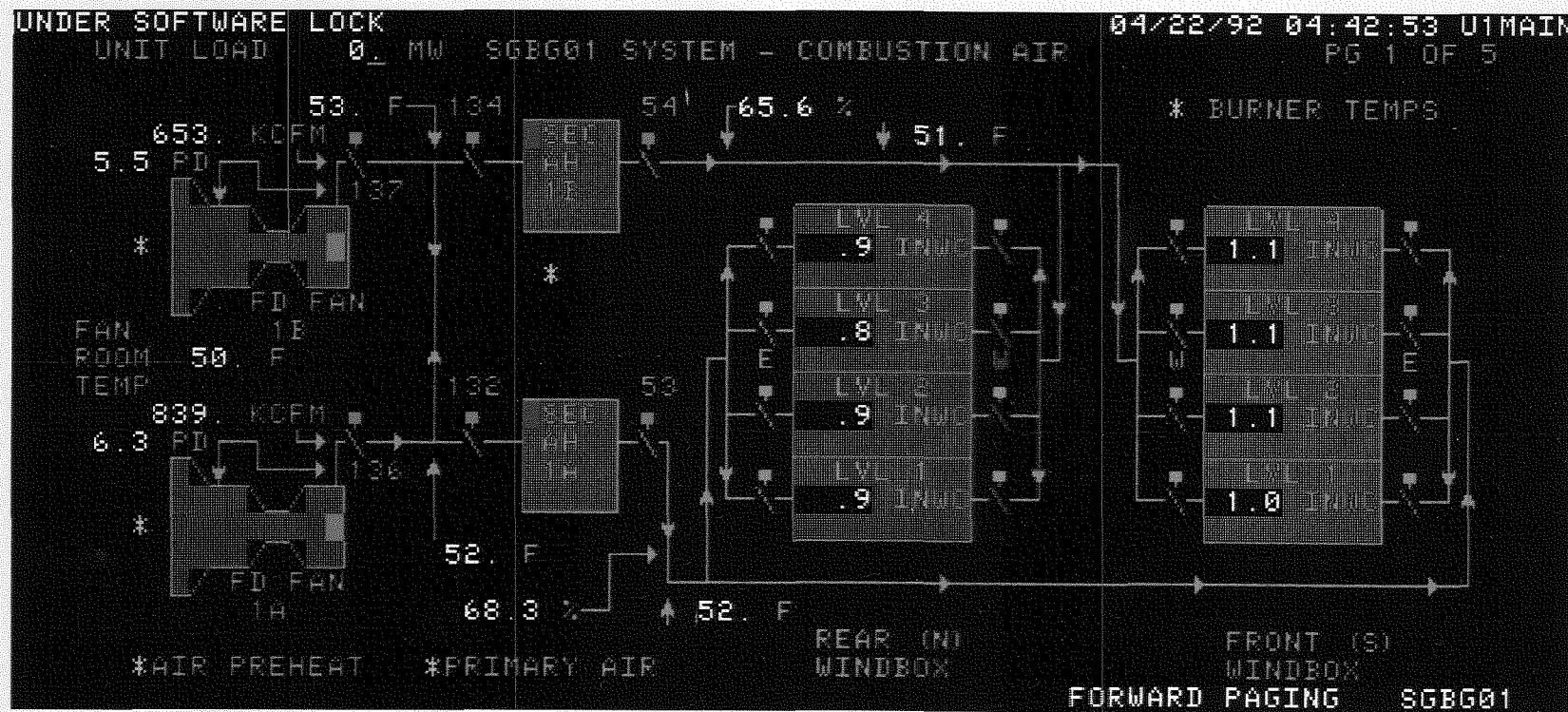
UNDER SOFTWARE LOCK
04/22/92 04:42:53 U1MAIN
UNIT LOAD 0. MW SGBG01 SYSTEM - COMBUSTION AIR
PG 1 OF 5
* BURNER TEMPS
53. F
134
54
65.6 %
51. F
653. KCFM
5.5 PD
137
FD FAN
1B
FAN ROOM TEMP 50. F
839. KCFM
6.3 PD
136
FD FAN
1A
132
53
52. F
68.3 %
52. F
LVL 4 .9 INWC
LVL 3 .8 INWC
LVL 2 .9 INWC
LVL 1 .9 INWC
LVL 4 1.1 INWC
LVL 3 1.1 INWC
LVL 2 1.1 INWC
LVL 1 1.0 INWC
E
W
W
E
*AIR PREHEAT
*PRIMARY AIR
REAR (N) WINDBOX
FRONT (S) WINDBOX
FORWARD PAGING
SGBG01

IP7_002197

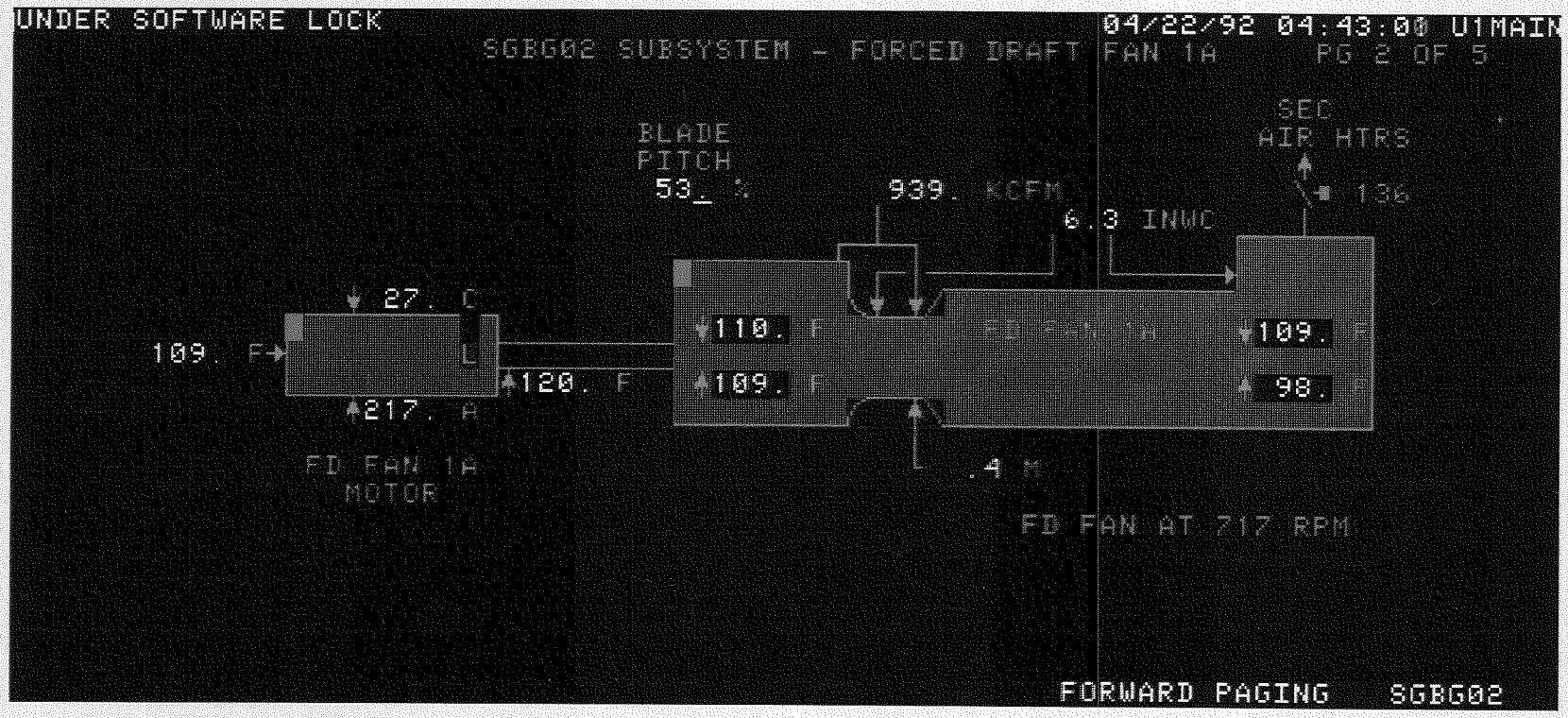
UNDER SOFTWARE LOCK
04/22/92 04:43:00 U1MAIN
SGBG02 SUBSYSTEM - FORCED DRAFT FAN 1A
PG 2 OF 5
BLADE
PITCH
53_ %
939. KCFM
6.3 INWC
SEC
AIR HTRS
136
27. C
109. F
L
217. A
120. F
110. F
109. F
FD FAN 1A
109. F
98. F
FD FAN 1A
MOTOR
.4 M
FD FAN AT 717 RPM
FORWARD PAGING
SGBG02

IP7_002198

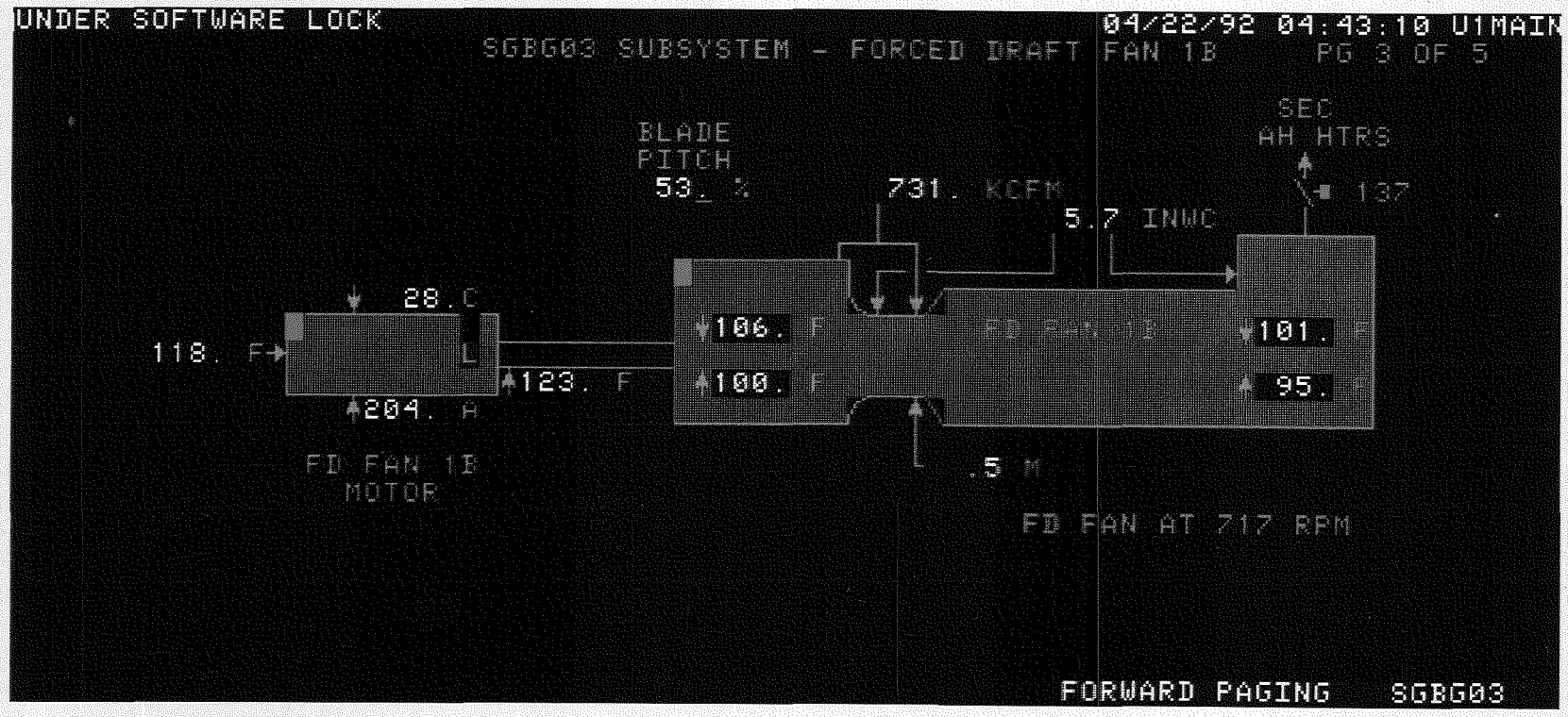
UNDER SOFTWARE LOCK
04/22/92 04:43:10 U1MAIN
SGBG03 SUBSYSTEM - FORCED DRAFT FAN 1B
PG 3 OF 5
BLADE
PITCH
53. %
731. KCFM
5.7 INWC
SEC
AH HTRS
137
28. C
118. F
L
123. F
204. A
106. F
100. F
FD FAN 1B
101. F
95. F
FD FAN 1B
MOTOR
.5 M
FD FAN AT 717 RPM
FORWARD PAGING
SGBG03

IP7_002199

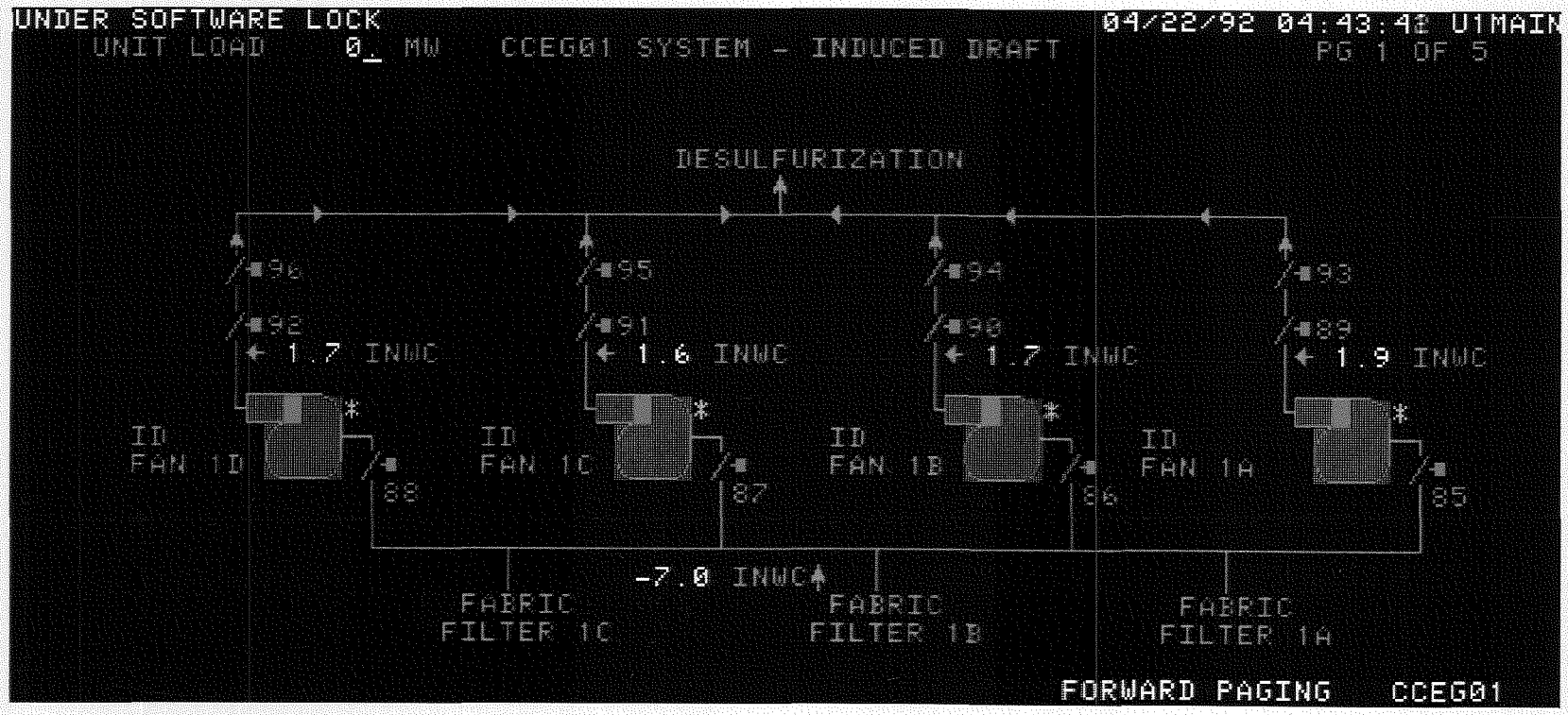
UNDER SOFTWARE LOCK
04/22/92 04:43:42 U1MAIN
UNIT LOAD 0 MW
CCEG01 SYSTEM - INDUCED DRAFT
PG 1 OF 5
DESULFURIZATION
96
95
94
93
92
91
90
89
1.7 INWC
1.6 INWC
1.7 INWC
1.9 INWC
ID FAN 1D
ID FAN 1C
ID FAN 1B
ID FAN 1A
88
87
86
85
-7.0 INWC
FABRIC FILTER 1C
FABRIC FILTER 1B
FABRIC FILTER 1A
FORWARD PAGING
CCEG01

IP7_002200

UNDER SOFTWARE LOCK 04/22/92 04:44:00 U1MAIN

MEASUREMENT DISPLAY

WEATHER DATA

BLOCK	VALUE		DESCRIPTION	STATUS	ALARM
INAKV0001	12.37	PSIA	ATMOSPHERIC PRESSURE		
INAPT0227	25.19	INHG	BAROMETRIC PRESSURE		
INAKK0531	50.	DEGF	AMBIENT TEMPERATURE		
SGBTE1160	46.	DEGF	FAN ROOM OUTSIDE AMBIENT TEMP		
INAKK0530	89.	PCT	RELATIVE HUMIDITY		
INAKK0529	.05	IN	PRECIPITATION		
INAKK0532	3.	MPH	WIND SPEED		
INAKK0533	340.	DEG	WIND DIRECTION		

FORWARD PAGING WTHR

IP7_002201

UNDER SOFTWARE LOCK 04/22/92 04:44:25 U1MAIN

MEASUREMENT DISPLAY

AIR DAMPER POSITIONS

BLOCK	VALUE	DESCRIPTION	STATUS	ALARM
COAKS007A	55.0 PCT	SECONDARY AIR DAMPER POS 1A		
COAKS003A	55.1 PCT	SECONDARY AIR DAMPER POS 1B		
COAKS005A	55.0 PCT	SECONDARY AIR DAMPER POS 1C		
COAKS009A	55.1 PCT	SECONDARY AIR DAMPER POS 1D		
COAKS010A	54.9 PCT	SECONDARY AIR DAMPER POS 1E		
COAKS006A	55.0 PCT	SECONDARY AIR DAMPER POS 1F		
COAKS004A	55.1 PCT	SECONDARY AIR DAMPER POS 1G		
COAKS008A	55.1 PCT	SECONDARY AIR DAMPER POS 1H		
COAKS021A	1.2 PCT	PRIMARY AIR DAMPER POS 1A		
COAKS022A	1.1 PCT	PRIMARY AIR DAMPER POS 1B		
COAKS023A	.0 PCT	PRIMARY AIR DAMPER POS 1C		
COAKS024A	1.1 PCT	PRIMARY AIR DAMPER POS 1D		
COAKS025A	1.0 PCT	PRIMARY AIR DAMPER POS 1E		
COAKS026A	1.2 PCT	PRIMARY AIR DAMPER POS 1F		
COAKS027A	1.1 PCT	PRIMARY AIR DAMPER POS 1G		
COAKS028A	1.3 PCT	PRIMARY AIR DAMPER POS 1H		

FORWARD PAGING DAMPER

IP7_002202

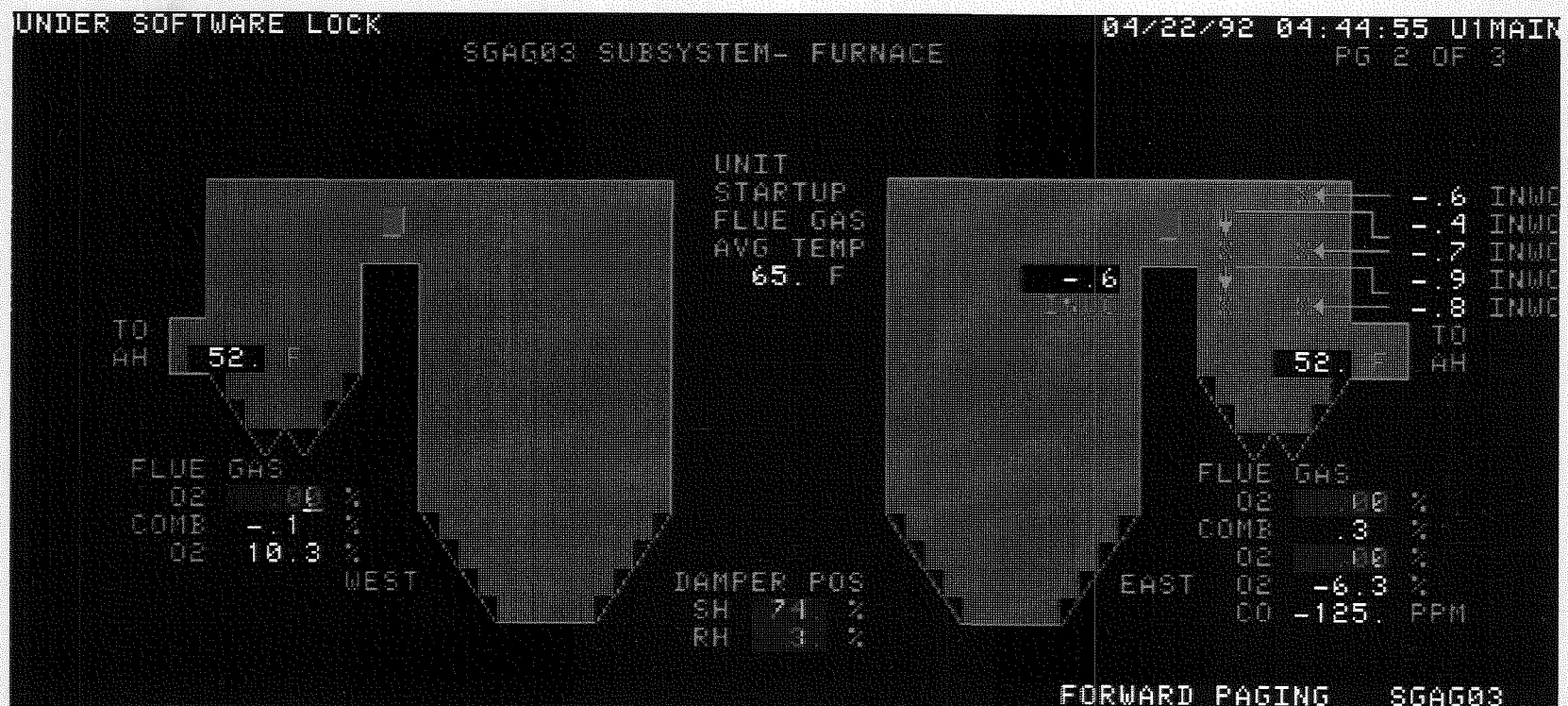
UNDER SOFTWARE LOCK
04/22/92 04:44:55 U1MAIN
SGAG03 SUBSYSTEM- FURNACE
PG 2 OF 3
UNIT
STARTUP
FLUE GAS
AVG TEMP
65. F
TO
AH
52. F
FLUE GAS
O2 .0 %
COMB -.1 %
O2 10.3 %
WEST
DAMPER POS
SH 71 %
RH 3 %
-.6
52. F
FLUE GAS
O2 .0 %
COMB .3 %
O2 .0 %
EAST O2 -6.3 %
CO -125. PPM
-.6 INWC
-.4 INWC
-.7 INWC
-.9 INWC
-.8 INWC
TO
AH
FORWARD PAGING SGAG03

IP7_002203

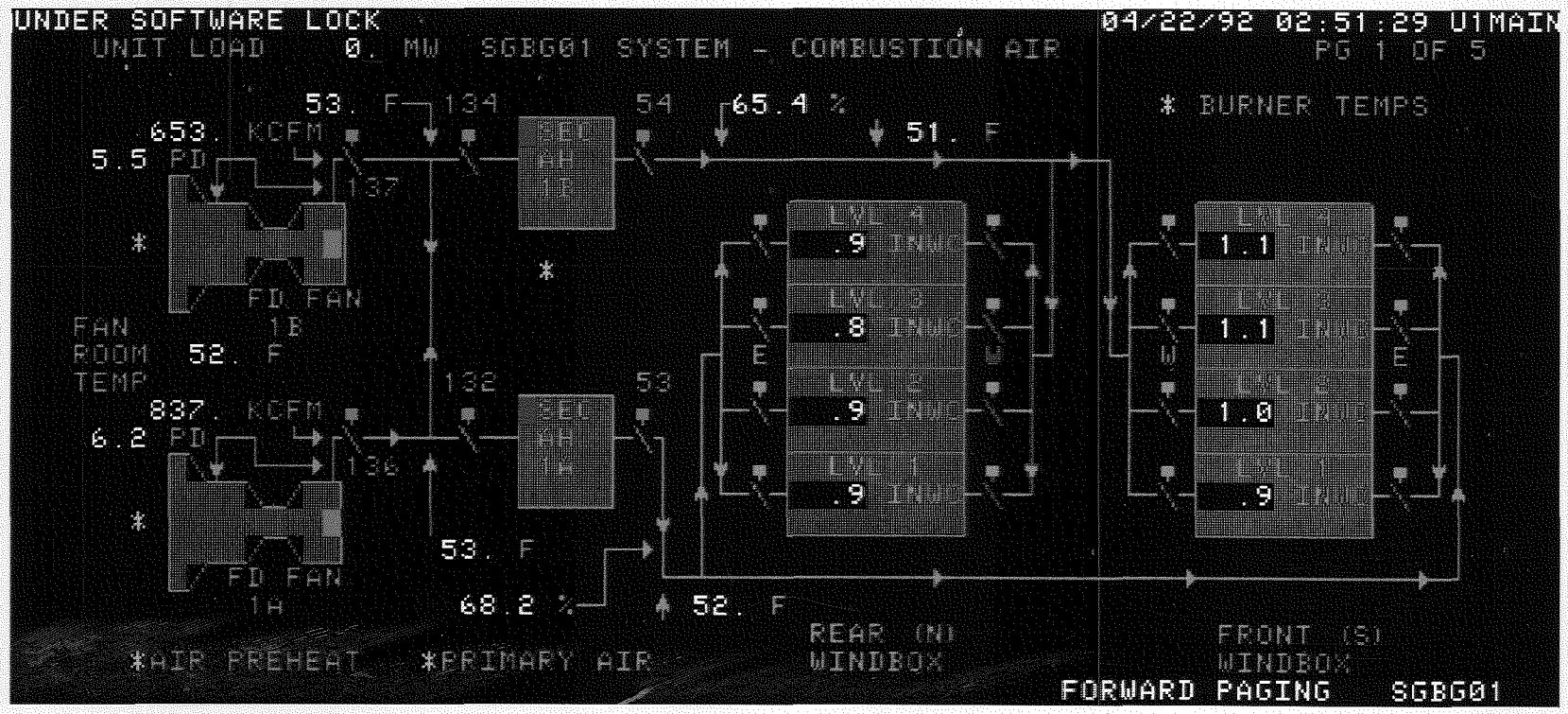
UNDER SOFTWARE LOCK
04/22/92 02:51:29 U1MAIN
UNIT LOAD 0. MW SGBG01 SYSTEM - COMBUSTION AIR
PG 1 OF 5
* BURNER TEMPS
53. F
134
54
65.4 %
51. F
653. KCFM
5.5 PD
137
FD FAN 1B
FAN ROOM TEMP 52. F
837. KCFM
6.2 PD
136
132
53
FD FAN 1A
53. F
68.2 %
52. F
LVL 4 .9 INWC
LVL 2 .8 INWC
LVL 3 .9 INWC
LVL 1 .9 INWC
1.1
1.1
1.0
.9
E
W
REAR (N) WINDBOX
FRONT (S) WINDBOX
*AIR PREHEAT
*PRIMARY AIR
FORWARD PAGING
SGBG01

IP7_002204

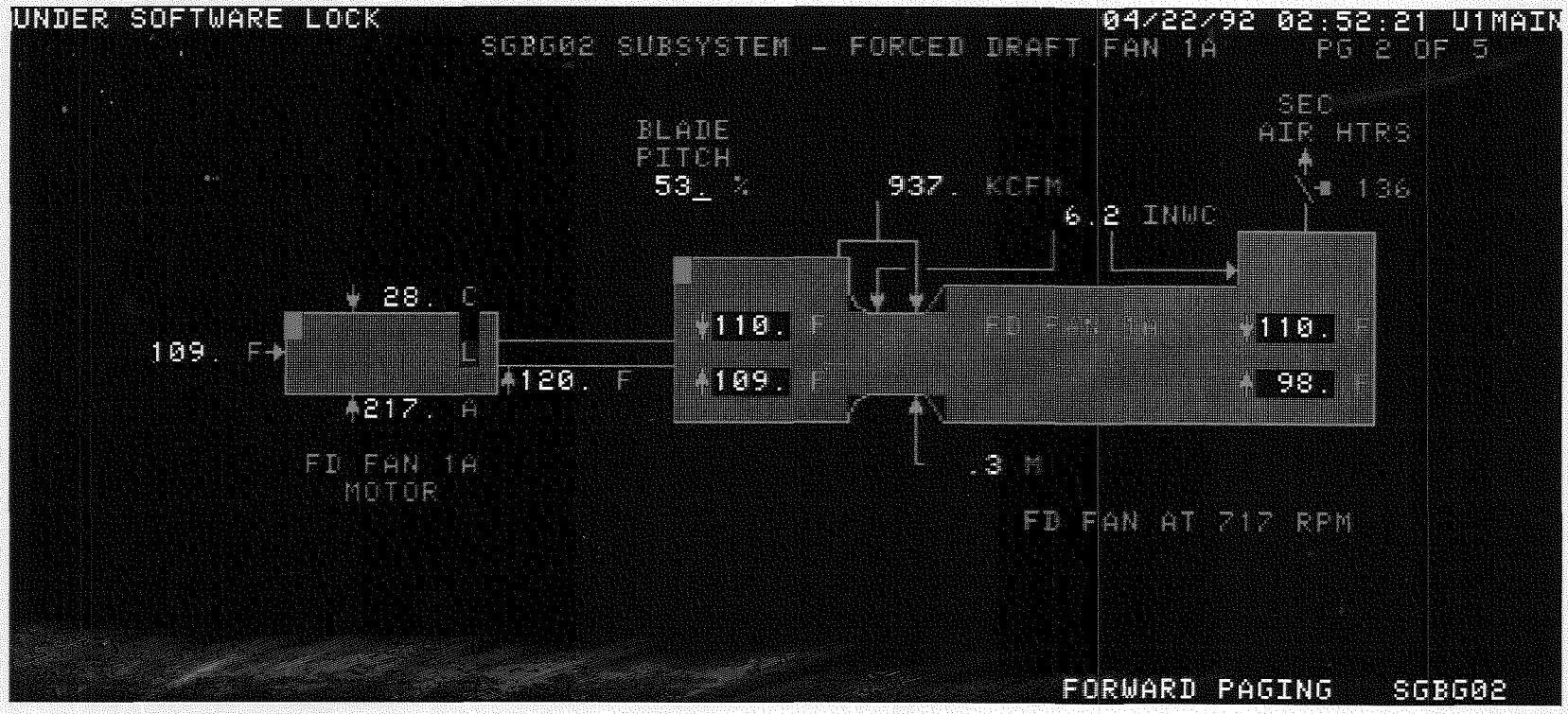
UNDER SOFTWARE LOCK
04/22/92 02:52:21 U1MAIN
SGBG02 SUBSYSTEM - FORCED DRAFT FAN 1A
PG 2 OF 5
BLADE
PITCH
53. %
937. KCFM
6.2 INWC
SEC
AIR HTRS
136
28. C
109. F
L
120. F
217. A
110. F
109. F
110. F
98. F
.3 M
FD FAN 1A
MOTOR
FD FAN AT 717 RPM
FORWARD PAGING
SGBG02

IP7_002205

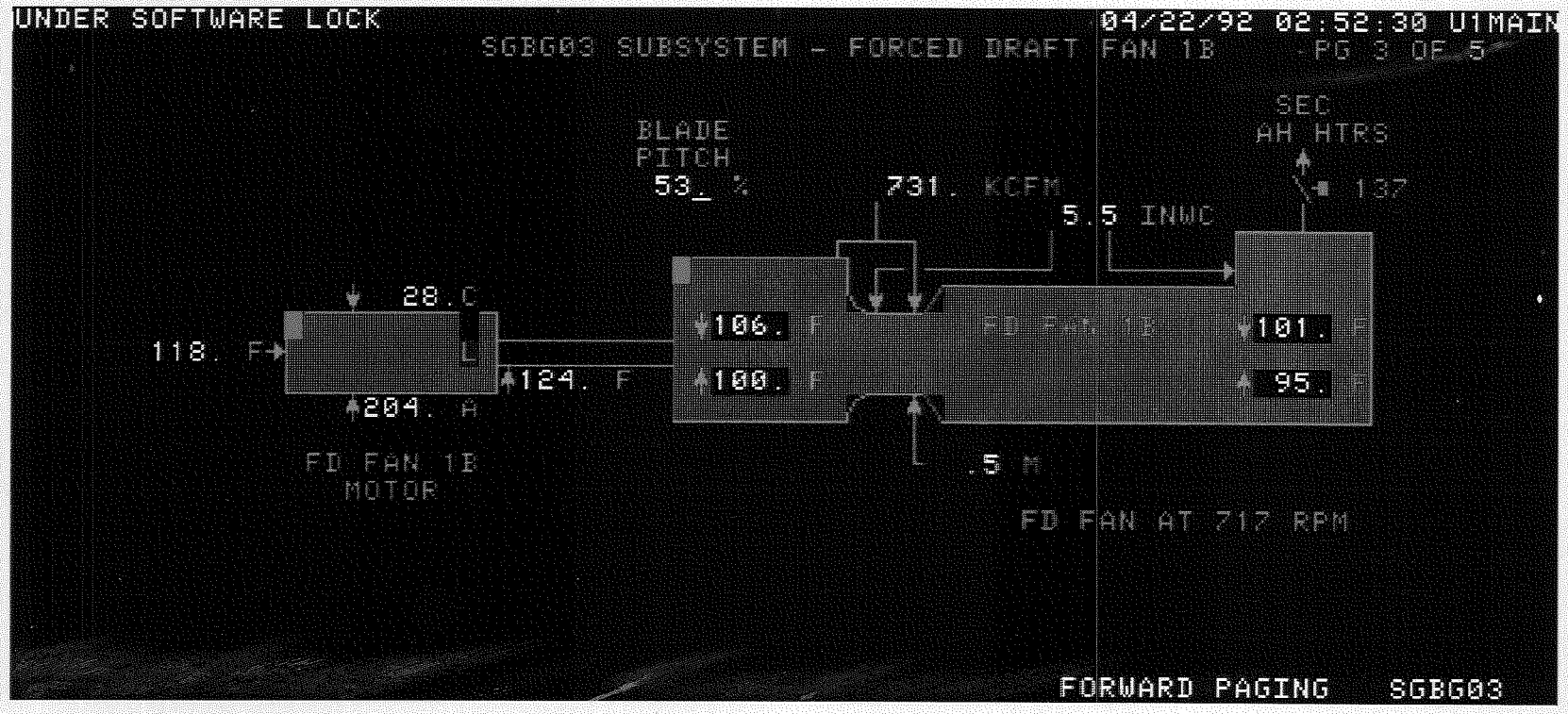
UNDER SOFTWARE LOCK
04/22/92 02:52:30 U1MAIN
SGBG03 SUBSYSTEM - FORCED DRAFT FAN 1B
PG 3 OF 5
BLADE
PITCH
53_ %
731. KCFM
5.5 INWC
SEC
AH HTRS
137
28.C
118. F
124. F
204. A
106. F
100. F
101. F
95. F
FD FAN 1B
MOTOR
.5 M
FD FAN AT 717 RPM
FORWARD PAGING
SGBG03

IP7_002206

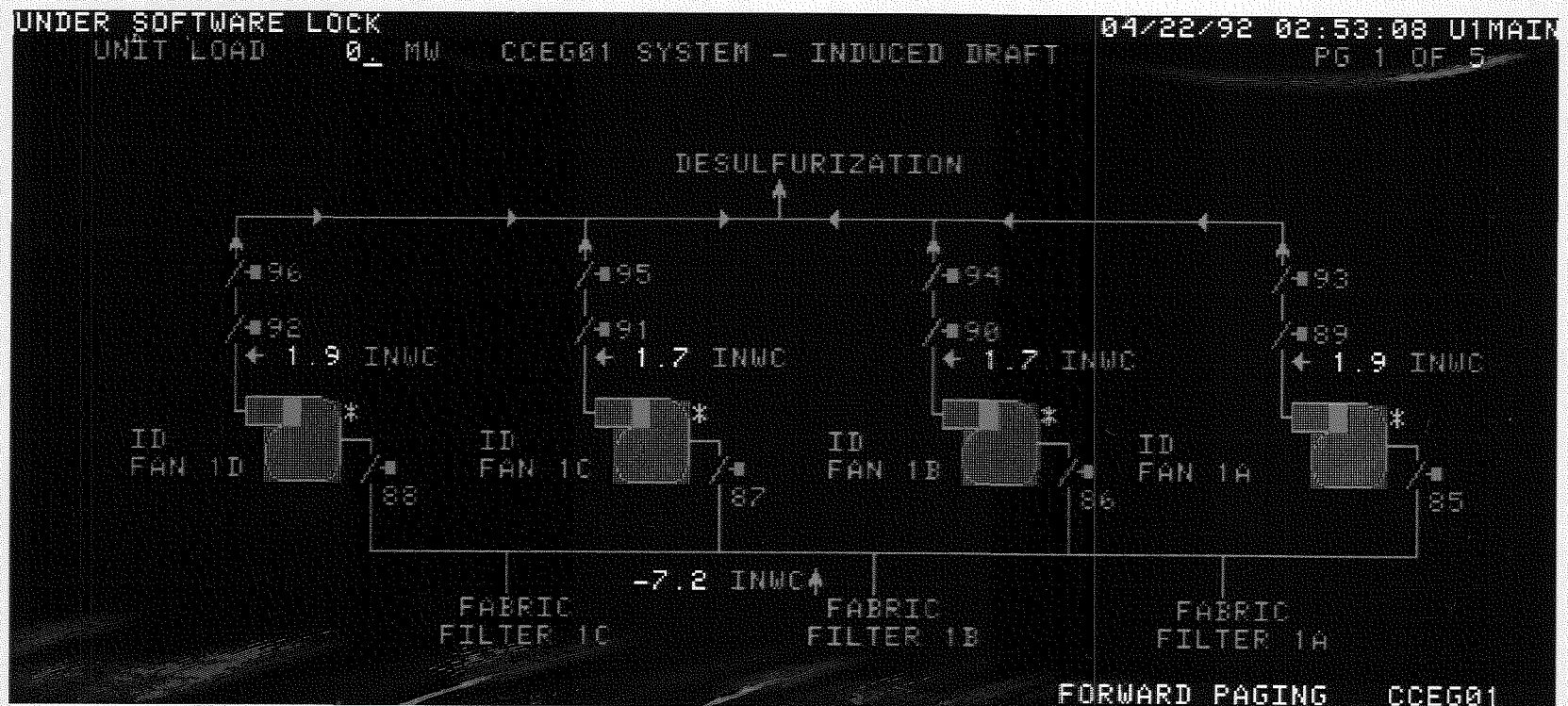
UNDER SOFTWARE LOCK
UNIT LOAD 0_ MW
CCEG01 SYSTEM - INDUCED DRAFT
04/22/92 02:53:08 U1MAIN
PG 1 OF 5
DESULFURIZATION
96
92
1.9 INWC
ID FAN 1D
88
95
91
1.7 INWC
ID FAN 1C
87
94
90
1.7 INWC
ID FAN 1B
86
93
89
1.9 INWC
ID FAN 1A
85
-7.2 INWC
FABRIC FILTER 1C
FABRIC FILTER 1B
FABRIC FILTER 1A
FORWARD PAGING
CCEG01

UNDER SOFTWARE LOCK FOXNET PORT A 04/22/92 04:26:01 U1MAIN

MEASUREMENT DISPLAY

AIR DAMPER POSITIONS

BLOCK	VALUE	DESCRIPTION	STATUS	ALARM
COAKS007A	55.0 PCT	SECONDARY AIR DAMPER POS 1A		
COAKS003A	55.1 PCT	SECONDARY AIR DAMPER POS 1B		
COAKS005A	55.0 PCT	SECONDARY AIR DAMPER POS 1C		
COAKS009A	55.1 PCT	SECONDARY AIR DAMPER POS 1D		
COAKS010A	55.0 PCT	SECONDARY AIR DAMPER POS 1E		
COAKS006A	55.0 PCT	SECONDARY AIR DAMPER POS 1F		
COAKS004A	55.1 PCT	SECONDARY AIR DAMPER POS 1G		
COAKS008A	55.1 PCT	SECONDARY AIR DAMPER POS 1H		
COAKS021A	1.2 PCT	PRIMARY AIR DAMPER POS 1A		
COAKS022A	1.1 PCT	PRIMARY AIR DAMPER POS 1B		
COAKS023A	.0 PCT	PRIMARY AIR DAMPER POS 1C		
COAKS024A	1.1 PCT	PRIMARY AIR DAMPER POS 1D		
COAKS025A	1.0 PCT	PRIMARY AIR DAMPER POS 1E		
COAKS026A	1.2 PCT	PRIMARY AIR DAMPER POS 1F		
COAKS027A	1.1 PCT	PRIMARY AIR DAMPER POS 1G		
COAKS028A	1.3 PCT	PRIMARY AIR DAMPER POS 1H		

FORWARD PAGING DAMPER

IP7_002208

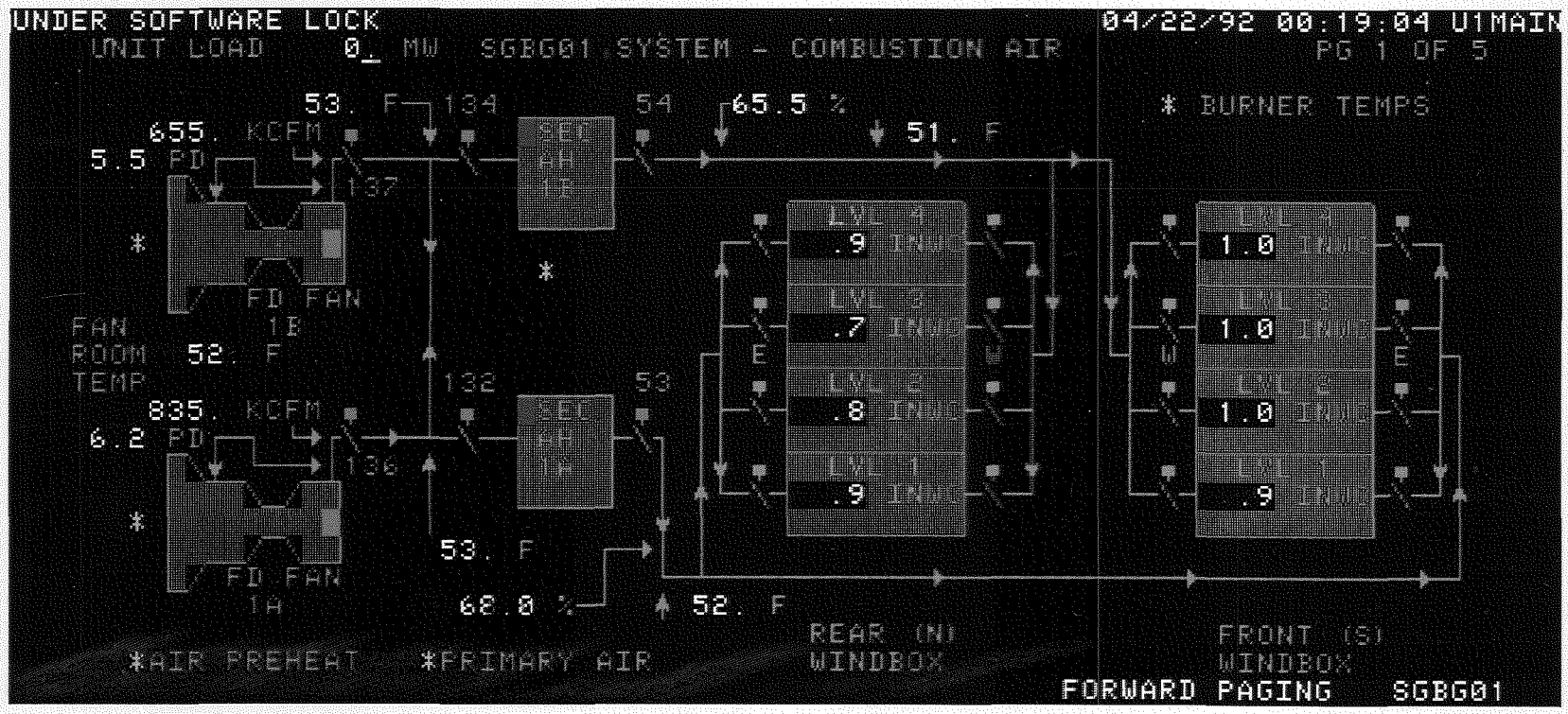
UNDER SOFTWARE LOCK
04/22/92 00:19:04 U1MAIN
UNIT LOAD 0 MW SGBG01 SYSTEM - COMBUSTION AIR
PG 1 OF 5
* BURNER TEMPS
53. F
134
54
65.5 %
51. F
655. KCFM
5.5 PD
137
FD FAN 1B
FAN ROOM TEMP 52. F
835. KCFM
6.2 PD
136
FD FAN 1A
132
53
53. F
68.0 %
52. F
.9
.7
.8
.9
1.0
1.0
1.0
.9
E
W
REAR (N) WINDBOX
FRONT (S) WINDBOX
*AIR PREHEAT
*PRIMARY AIR
FORWARD PAGING SGBG01

IP7_002209

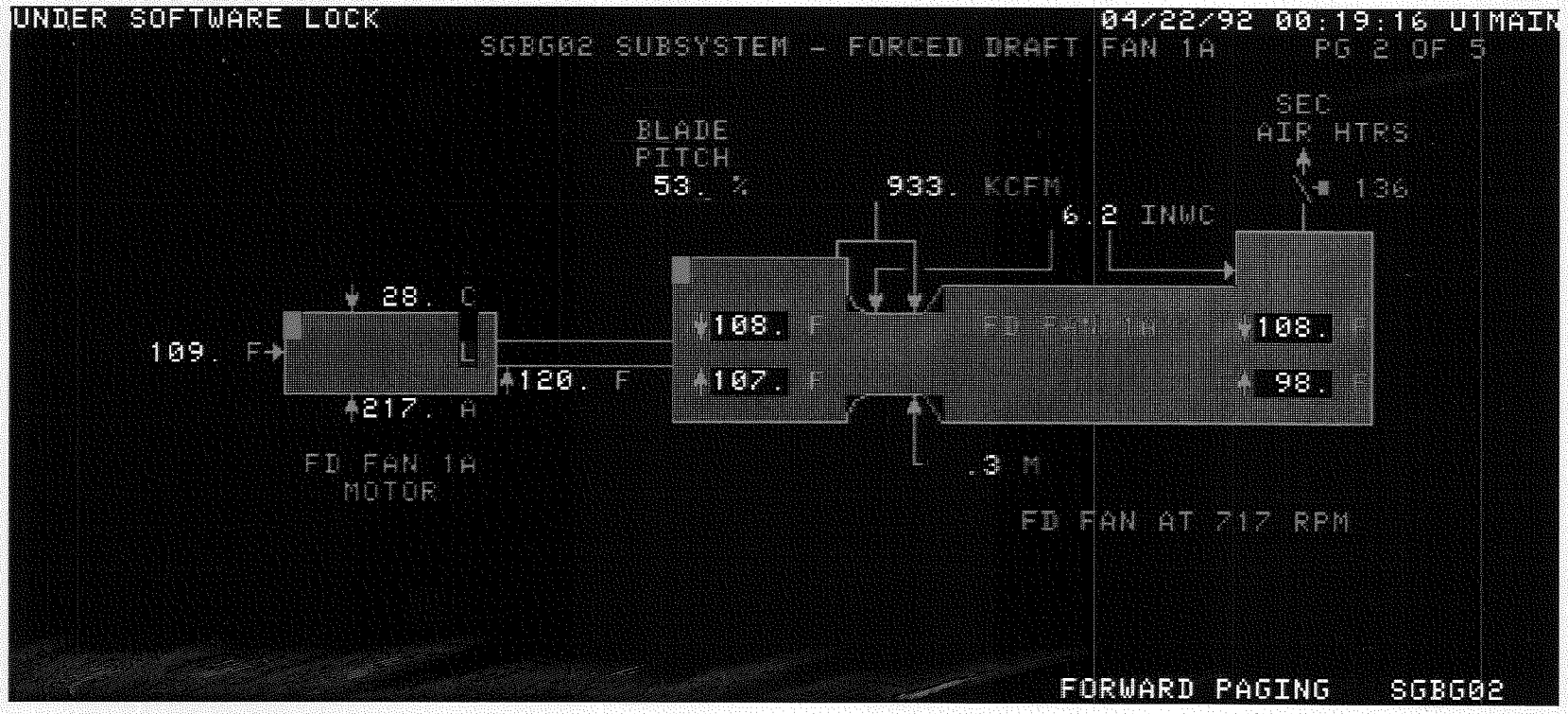
UNDER SOFTWARE LOCK
04/22/92 00:19:16 U1MAIN
SGBG02 SUBSYSTEM - FORCED DRAFT FAN 1A
PG 2 OF 5
BLADE
PITCH
53. %
933. KCFM
6.2 INWC
SEC
AIR HTRS
136
28. C
109. F
L
217. A
120. F
108. F
107. F
FD FAN 1M
108. F
98. F
FD FAN
MOTOR
.3 M
FD FAN AT 717 RPM
FORWARD PAGING
SGBG02

IP7_002210

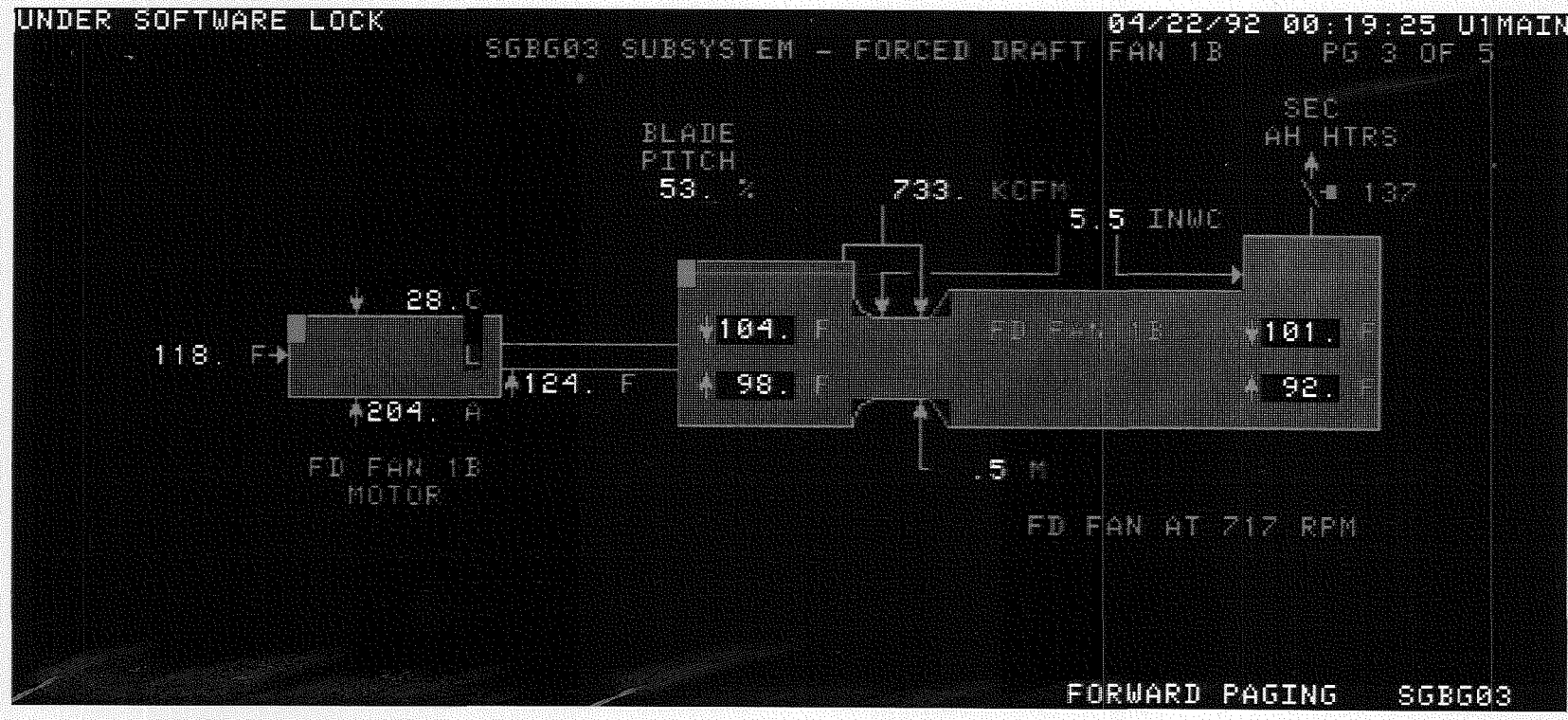
UNDER SOFTWARE LOCK
04/22/92 00:19:25 U1MAIN
SGBG03 SUBSYSTEM - FORCED DRAFT FAN 1B
PG 3 OF 5
BLADE
PITCH
53. %
733. KCFM
5.5 INWC
SEC
AH HTRS
137
28.C
118. F
L
124. F
204. A
104. F
98. F
101. F
92. F
FD FAN 1B
MOTOR
.5 M
FD FAN AT 717 RPM
FORWARD PAGING
SGBG03

IP7_002211

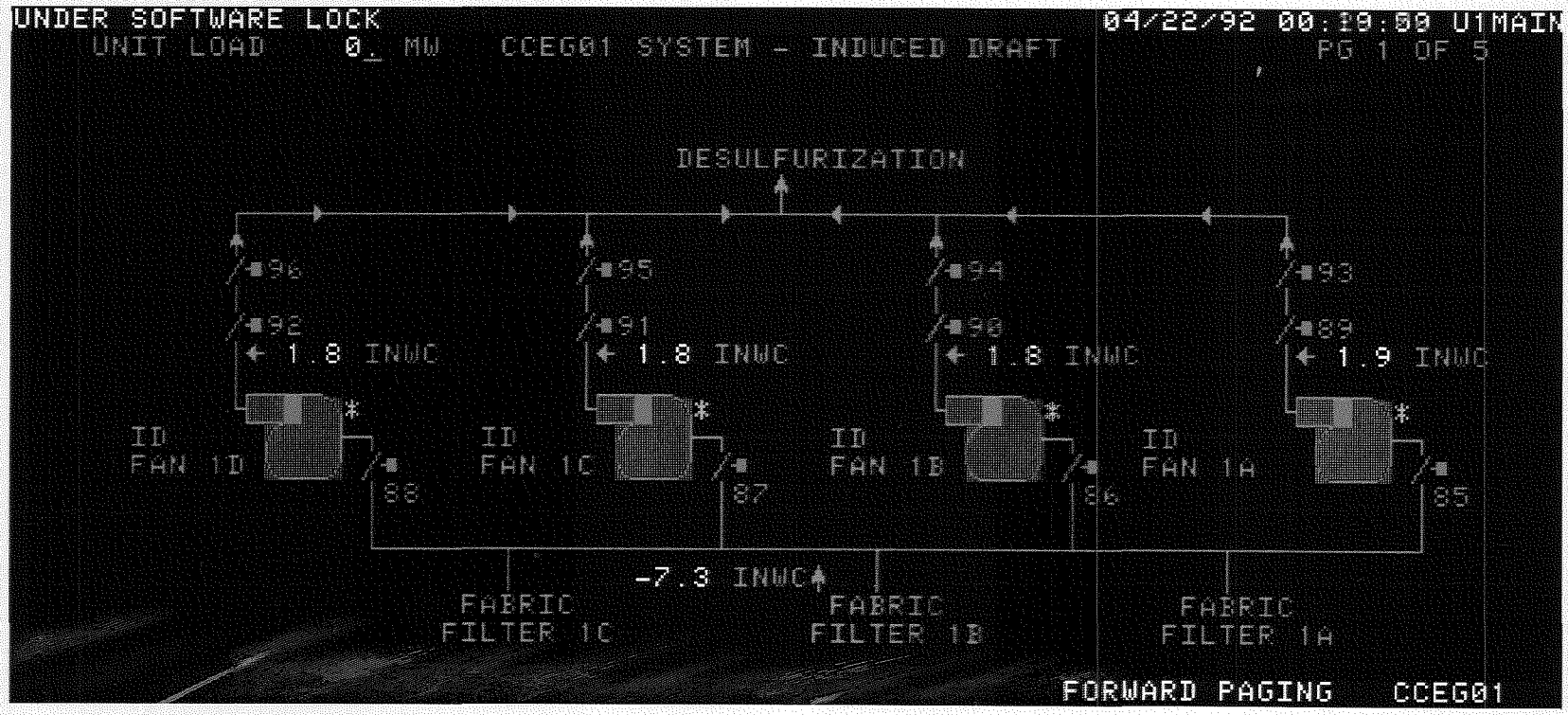
UNDER SOFTWARE LOCK
04/22/92 00:10:09 U1MAIN
UNIT LOAD 0. MW
CCEG01 SYSTEM - INDUCED DRAFT
PG 1 OF 5
DESULFURIZATION
96
95
94
93
92
91
90
89
1.8 INWC
1.8 INWC
1.8 INWC
1.9 INWC
ID FAN 1D
ID FAN 1C
ID FAN 1B
ID FAN 1A
88
87
86
85
-7.3 INWC
FABRIC FILTER 1C
FABRIC FILTER 1B
FABRIC FILTER 1A
FORWARD PAGING
CCEG01

IP7_002212

UNDER SOFTWARE LOCK 04/22/92 00:20:25 U1MAIN

MEASUREMENT DISPLAY

WEATHER DATA

BLOCK	VALUE		DESCRIPTION	STATUS	ALARM
INAKV0001	12.37	PSIA	ATMOSPHERIC PRESSURE		
INAPT0227	25.19	INHG	BAROMETRIC PRESSURE		
INAKK0531	55.	DEGF	AMBIENT TEMPERATURE		
SGBTE1160	49.	DEGF	FAN ROOM OUTSIDE AMBIENT TEMP		
INAKK0530	80.	PCT	RELATIVE HUMIDITY		
INAKK0529	.05	IN	PRECIPITATION		
INAKK0532	7.	MPH	WIND SPEED		
INAKK0533	59.	DEG	WIND DIRECTION		

FORWARD PAGING WTHR

IP7_002213

UNDER SOFTWARE LOCK 04/22/92 00:20:55 U1MAIN

MEASUREMENT DISPLAY

AIR DAMPER POSITIONS

BLOCK	VALUE	DESCRIPTION	STATUS	ALARM
COAKS007A	55.0 PCT	SECONDARY AIR DAMPER POS 1A		
COAKS003A	55.1 PCT	SECONDARY AIR DAMPER POS 1B		
COAKS005A	55.0 PCT	SECONDARY AIR DAMPER POS 1C		
COAKS009A	55.0 PCT	SECONDARY AIR DAMPER POS 1D		
COAKS010A	55.0 PCT	SECONDARY AIR DAMPER POS 1E		
COAKS006A	55.0 PCT	SECONDARY AIR DAMPER POS 1F		
COAKS004A	55.1 PCT	SECONDARY AIR DAMPER POS 1G		
COAKS008A	55.1 PCT	SECONDARY AIR DAMPER POS 1H		
COAKS021A	1.2 PCT	PRIMARY AIR DAMPER POS 1A		
COAKS022A	1.1 PCT	PRIMARY AIR DAMPER POS 1B		
COAKS023A	.0 PCT	PRIMARY AIR DAMPER POS 1C		
COAKS024A	1.1 PCT	PRIMARY AIR DAMPER POS 1D		
COAKS025A	1.0 PCT	PRIMARY AIR DAMPER POS 1E		
COAKS026A	1.2 PCT	PRIMARY AIR DAMPER POS 1F		
COAKS027A	1.1 PCT	PRIMARY AIR DAMPER POS 1G		
COAKS028A	1.3 PCT	PRIMARY AIR DAMPER POS 1H		

FORWARD PAGING DAMPER

IP7_002214

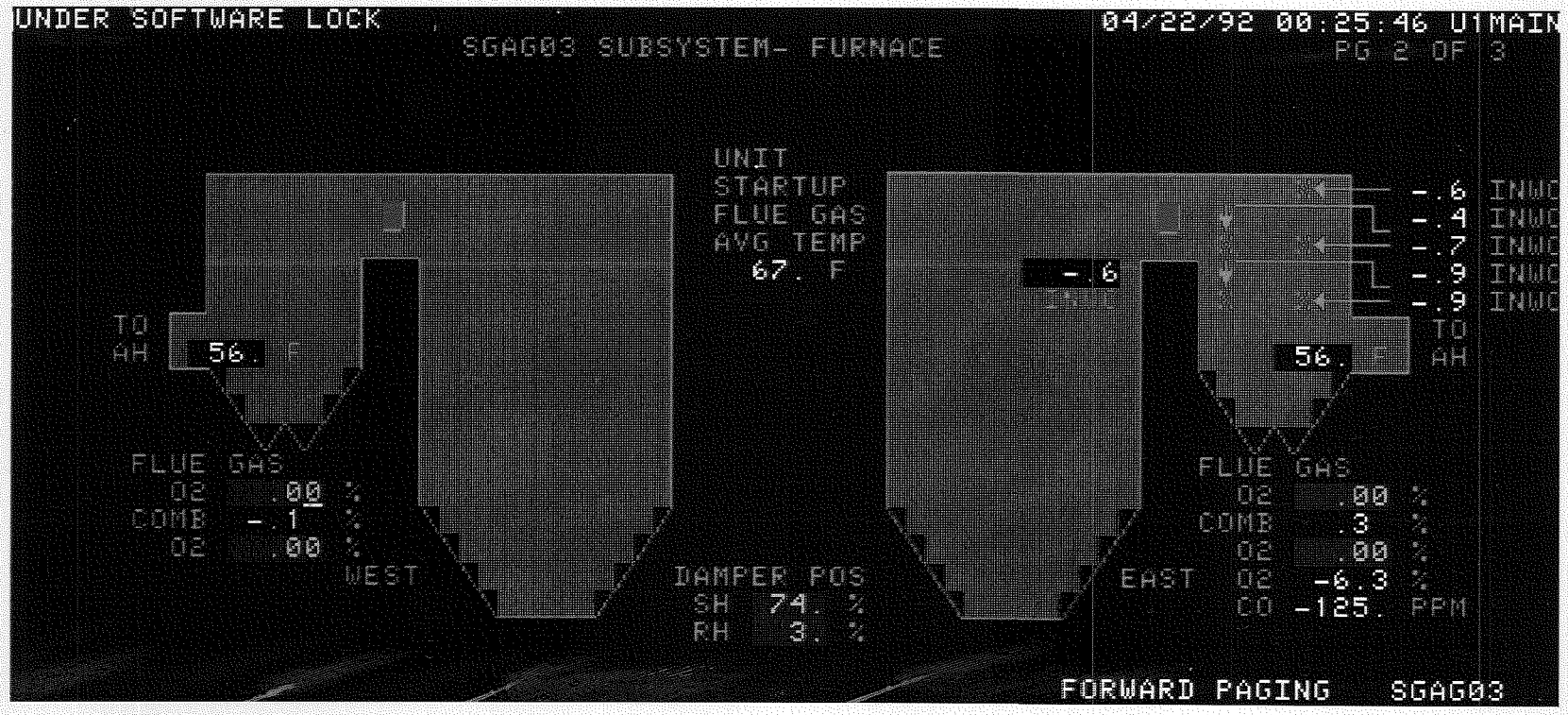
UNDER SOFTWARE LOCK
04/22/92 00:25:46 U1MAIN
SGAG03 SUBSYSTEM- FURNACE
PG 2 OF 3
UNIT
STARTUP
FLUE GAS
AVG TEMP
67. F
TO
AH
56. F
FLUE GAS
O2 .00 %
COMB -.1 %
O2 .00 %
WEST
DAMPER POS
SH 74. %
RH 3. %
-.6
-.6 INWC
-.4 INWC
-.7 INWC
-.9 INWC
-.9 INWC
TO
AH
56. F
FLUE GAS
O2 .00 %
COMB .3 %
O2 .00 %
EAST
O2 -6.3 %
CO -125. PPM
FORWARD PAGING SGAG03

IP7_002215