Unit 2
Date of Calculation: 9/29/2010

	1	2	3	4
Gross Generation, Mw	973.19	949.60	997.04	986.72
Net turbine cycle HR	7715	7884	7844	7812
HP Section Efficiency	92.59	91.57	91.59	91.63
IP section Efficiency	92.75	92.11	92.11	92.11
Cycle Losses	0	0	0	0
Throttle Flow, kpph	6900.00	6732.56	7134.26	7134.26
1st Stage Inlet Press, psia	2339.8	2223.1	2346.0	2346.0
7th Stage Press, psia	627.8	612.3	641.3	630.9
IP Inlet Press (upstream CRV's), psia	585.8	570.8	598.3	588.6
14th Stage Shell Press, psia	139.6	136.6	142.2	138.5
Reheat Pressure Drop	6.70	6.78	6.70	6.70
HP Turb Press Ratio	2.72	2.65	2.67	2.71
IP Turb Press Ratio	4.20	4.18	4.21	4.25
Boiler Blowdown Flow, lb/hr	6281	17220	18247	7134
Cycle Makeup Flow, lb/hr	69000	17220	18247	7134
Air Preheat Flow, lb/hr	0	0	0	0
Boiler Feed Flow, kpph	6969	6371	6748	7141
SH Attemp Flow, lb/hr	0	378982	404266	0
RH Attemp Flow, lb/hr	0	0	0	0
1st Stage Outlet Press, psia	1706.6	1621.5	1711.0	1711.0

Start 9/28/2010 9:30
End 9/28/2010 11:30

1 U2 Design HB FROM ALSTOM
2 U2 Test Data Reduction
3 U2 Corr Test ALSTOM Test
4 U2 FW HTRS & RH Press Drop to DESIGN Values

IP7018845

2TPM PEPSE Model

Description	Value	Units
Main Steam Pressure	**2285.84**	psia
Main Steam Temperature	**1001.21**	deg F
Main Steam Flow	**6732560**	lbm/hr
1st Stage Inlet Pressure	**2223.08**	psia
Extraction Pressure HP HTR 8	**1043.17**	psia
HP Section Exhaust Pressure	**612.34**	psia
Extraction Pressure HP HTR 6	**253.43**	psia
IP Section Exhaust Pressure	**136.56**	psia
Extraction Pressure LP HTR 4	**67.00**	psia
Extraction Pressure LP HTR 3	**42.72**	psia
Extraction Pressure LP HTR 2	**12.73**	psia
Extraction Pressure LP HTR 1A	**5.77**	psia
Extraction Pressure LP HTR 1B	**5.51**	psia
Extraction Pressure LP HTR 1C	**5.66**	psia
Extraction Temp HP HTR 8	**784.65**	deg f
HP Section Exhaust Temp	**642.00**	deg f
Extraction Temp HP HTR 6	**812.80**	deg f
IP Section Exhaust Temp	**638.21**	deg f
Extraction Temp LP HTR 4	**530.68**	deg f
Extraction Temp LP HTR 3	**438.42**	deg f
Extraction Temp LP HTR 2	**253.59**	deg f
Reheater Temperature	**1012.26**	deg f
Hot Reheat Pressure	**570.85**	psia
Condenser A Shell Pressure	**-3.23**	In Hg
Condenser B Shell Pressure	**-2.61**	In Hg
Condenser C Shell Pressure	**-2.34**	In Hg
HP HTR 8A Shell Inlet Pressure	**1042.87**	psia
HP HTR 8B Shell Inlet Pressure	**1043.48**	psia
HP HTR 7A Shell Inlet Pressure	**605.47**	psia
HP HTR 7B Shell Inlet Pressure	**606.54**	psia
HP HTR 6A Shell Inlet Pressure	**253.56**	psia
HP HTR 6B Shell Inlet Pressure	**253.29**	psia
DA Shell Inlet Pressure	**133.84**	psia
LP HTR 4 Shell Inlet Pressure	**67.00**	psia
LP HTR 3 Shell Inlet Pressure	**42.72**	psia
LP HTR 2 Shell Inlet Pressure	**12.73**	psia
LP HTR 1A Shell Inlet Pressure	**5.60**	psia
LP HTR 1B Shell Inlet Pressure	**5.34**	psia
LP HTR 1C Shell Inlet Pressure	**5.50**	psia
HP HTR 8A FW Outlet Temp	**549.96**	deg f
HP HTR 8B FW Outlet Temp	**548.68**	deg f
HP HTR 7A FW Outlet Temp	**487.46**	deg f
HP HTR 7B FW Outlet Temp	**485.56**	deg f
HP HTR 6A FW Outlet Temp	**404.18**	deg f

IP7018846

HP HTR 6B FW Outlet Temp	**404.10**	deg f
DA FW Outlet Temp	**350.35**	deg f
LP HTR 4 FW Outlet Temp	**303.63**	deg f
LP HTR 3 FW Outlet Temp	**272.23**	deg f
LP HTR 2 FW Outlet Temp	**202.92**	deg f
LP HTR 1A FW Outlet Temp	**164.02**	deg f
LP HTR 1B FW Outlet Temp	**162.92**	deg f
LP HTR 1C FW Outlet Temp	**162.65**	deg f
HP HTR 8A Drain Outlet Temp	**494.93**	deg f
HP HTR 8B Drain Outlet Temp	**494.37**	deg f
HP HTR 7A Drain Outlet Temp	**412.97**	deg f
HP HTR 7B Drain Outlet Temp	**411.74**	deg f
HP HTR 6A Drain Outlet Temp	**360.78**	deg f
HP HTR 6B Drain Outlet Temp	**365.05**	deg f
LP HTR 4 Drain Outlet Temp	**281.62**	deg f
LP HTR 3 Drain Outlet Temp	**232.04**	deg f
LP HTR 2 Drain Outlet Temp	**173.40**	deg f
LP HTR 1A DRAIN OUTLET TEMP	**164.75**	deg f
LP HTR 1B DRAIN OUTLET TEMP	**162.81**	deg f
LP HTR 1C DRAIN OUTLET TEMP	**163.90**	deg f
BBFP 2A Discharge Pressure	**296.14**	psia
BBFP 2B Discharge Pressure	**296.14**	psia
Condensate Pump 1A Discharge Pressure	**434.94**	psia
Condensate Pump 1B Discharge Pressure	**434.94**	psia
BFPT 1A Exhaust Pressure	**1.78**	psia
Main BFP 1A Discharge Pressure	**2827.74**	psia
BFPT 1A Extraction Steam Flow	**122602.79**	lbm/h
BFPT 1B Exhaust Pressure	**1.35**	psia
Main BFP 1B Discharge Pressure	**2829.85**	psia
BFPT 1B Extraction Steam Flow	**133170.03**	lbm/h
Generator Gross Power	**949598**	KW
Generator H2 Pressure	**64.20**	psig
Generator Power Factor	**0.99**	
Condenser A Circ Water Inlet Temp	**94.59**	deg f
Condenser B Circ Water Inlet Temp	**80.88**	deg f
Condenser C Circ Water Inlet Temp	**81.01**	deg f
Blowdown (boiler losses)	**17220.00**	lbm/hr
Pressure Exhaust LPA	**1.59**	psia
Pressure Exhaust LPB	**1.28**	psia
Pressure Exhaust LPC	**1.15**	psia
APH Return to Cond Temp	**78.19**	deg f
Enthalpy LPA Exhaust	**994.00**	Btu/lbm
Enthalpy LPB Exhaust	**994.00**	Btu/lbm
Enthalpy LPC Exhaust	**994.00**	Btu/lbm
Main Steam Attemperation	**378982**	lbm/hr

IP7018847

Enthalpy Exhaust 18th Stage	**1151.40**	Btu/lbm
Enthalpy 19th Stage A Exhaust	**1094.00**	Btu/lbm
Enthalpy 19th Stage B Exhaust	**1094.00**	Btu/lbm
Enthalpy 19th Stage C Exhaust	**1094.00**	Btu/lbm
APH Extraction Water Flow	**0.00**	lbm/hr
CGR Extraction Water Flow	**0.00**	lbm/hr
Cycle Makeup Flow	**17220**	lbm/hr
SPE Barometric Pressure	**12.58**	psia
CGR Loss Flow	**0.00**	lb/hr
Enthalpy Ext to HP HTR 8A/8B	**1377.29**	Btu/lbm
Enthalpy Ext to HP HTR 6A/6B	**1429.93**	Btu/lbm
Enthalpy Ext to LP HTR 4	**1297.62**	Btu/lbm
Enthalpy Ext to LP HTR 3	**1254.90**	Btu/lbm
Enthalpy Ext to LP HTR 2	**1171.14**	Btu/lbm
Boiler Blowdown Flow Fraction	**0.0026**	
CGR Return Temp	**100.00**	deg f
APH Ext Flow Fraction	**0.0000**	
CGR Ext Flow Fraction	**0.0000**	
SH Attemp Flow Fraction	**0.0567**	
CGR Losses Flow Fraction	**0.0000**	
APH Leakage	**0.0000**	lbm/hr
APH Losses Flow Fraction	**0.0000**	

IP7018848

2TPM PEPSE Model DESCRIPTION	Index on Option 6 Template	PEPSE VARIABLE	Variable ID	Scale	Constant Addition	
MAIN STEAM PRESSURE	1	PPVSC	59			
MAIN STEAM TEMPERATURE	2	TTVSC	59			
MAIN STEAM FLOW	3	WWVSC	59			
1ST STAGE INLET PRESSURE	4	OPVB	200			
EXTRACTION PRESSURE HP HTR 8	5	PSIPV	3	1.0153		
HP SECTION EXHAUST PRESSURE	6	PSIPV	4			
EXTRACTION PRESSURE HP HTR 6	7	PSIPV	6	1.0187		
IP SECTION EXHAUST PRESSURE	8	PSIPV	7			
EXTRACTION PRESSURE LP HTR 4	9	PSIPV	8	1.031		
EXTRACTION PRESSURE LP HTR 3	10	PSIPV	9	1.0474		
EXTRACTION PRESSURE LP HTR 2	11	PSIPV	10	1.0552		
EXTRACTION PRESSURE LP HTR 1A	12	PSIPV	11	1.0412		
EXTRACTION PRESSURE LP HTR 1B	13	PSIPV	46	1.0412		
EXTRACTION PRESSURE LP HTR 1C	14	PSIPV	47	1.0412		old TPM va
	15					
EXTRACTION TEMP HP HTR 8	16	TEXIP	3		0	0.9
HP SECTION EXHAUST TEMP	17	OPVB	68			
EXTRACTION TEMP HP HTR 6	18	TEXIP	6		-14.9	-25.3
IP SECTION EXHAUST TEMP	19	TEXIP	7			
EXTRACTION TEMP LP HTR 4	20	TEXIP	8		-0.4	-25.2
EXTRACTION TEMP LP HTR 3	21	TEXIP	9		0	-21.3
EXTRACTION TEMP LP HTR 2	22	TEXIP	10		-13.5	-22.8
	23					
REHEATER TEMPERATURE	24	TTTORH	15			
HOT REHEAT PRESSURE	25	PPTORH	15			
CONDENSER A SHELL PRESSURE	26	PPSH	18			
CONDENSER B SHELL PRESSURE	27	PPSH	17			
CONDENSER C SHELL PRESSURE	28	PPSH	16			
HP HTR 8A SHELL INLET PR	29	PPSI	28			
HP HTR 8B SHELL INLET PR	30	PPSI	29			
HP HTR 7A SHELL INLET PR	31	PPSI	26			
HP HTR 7B SHELL INLET PR	32	PPSI	27			
HP HTR 6A SHELL INLET PR	33	PPSI	24			
HP HTR 6B SHELL INLET PR	34	PPSI	25			
DA SHELL INLET PRESSURE	35	PPSI	23			
LP HTR 4 SHELL INLET PR	36	PPSI	22			
LP HTR 3 SHELL INLET PR	37	PPSI	21			
LP HTR 2 SHELL INLET PR	38	PPSI	20			
LP HTR 1A SHELL INLET PR	39	PPSI	219	1.05		
LP HTR 1B SHELL INLET PR	40	PPSI	19	1.05		
LP HTR 1C SHELL INLET PR	41	PPSI	319	1.05		
	42					
HP HTR 8A FW OUTLET TEMP	43	TTFO	28			
HP HTR 8B FW OUTLET TEMP	44	TTFO	29			
HP HTR 7A FW OUTLET TEMP	45	TTFO	26			
HP HTR 7B FW OUTLET TEMP	46	TTFO	27			
HP HTR 6A FW OUTLET TEMP	47	TTFO	24			

IP7018849

HP HTR 6B FW OUTLET TEMP	48	TTFO	25
DA FW OUTLET TEMP	49	TTFO	23
LP HTR 4 FW OUTLET TEMP	50	TTFO	22
LP HTR 3 FW OUTLET TEMP	51	TTFO	21
LP HTR 2 FW OUTLET TEMP	52	TTFO	20
LP HTR 1A FW OUTLET TEMP	53	TTFO	219
LP HTR 1B FW OUTLET TEMP	54	TTFO	19
LP HTR 1C FW OUTLET TEMP	55	TTFO	319
	56		
HP HTR 8A DRAIN OUTLET TEMP	57	TTDO	28
HP HTR 8B DRAIN OUTLET TEMP	58	TTDO	29
HP HTR 7A DRAIN OUTLET TEMP	59	TTDO	26
HP HTR 7B DRAIN OUTLET TEMP	60	TTDO	27
HP HTR 6A DRAIN OUTLET TEMP	61	TTDO	24
HP HTR 6B DRAIN OUTLET TEMP	62	TTDO	25
LP HTR 4 DRAIN OUTLET TEMP	63	TTDO	22
LP HTR 3 DRAIN OUTLET TEMP	64	TTDO	21
LP HTR 2 DRAIN OUTLET TEMP	65	TTDO	20
LP HTR 1A DRAIN OUTLET TEMP	66	TTDO	219
LP HTR 1B DRAIN OUTLET TEMP	67	TTDO	19
LP HTR 1C DRAIN OUTLET TEMP	68	TTDO	319
	69		
BBFP A DISCHARGE PRESSURE	70	PMPDIS	34
BBFP B DISCHARGE PRESSURE	71	PMPDIS	35
CONDENSATE PUMP A DISCHARGE PRESSU	72	PMPDIS	42
CONDENSATE PUMP B DISCHARGE PRESSU	73	PMPDIS	43
	74		
BFPT A EXHAUST PRESSURE	75	PPPTGX	37
	76		
MAIN BFP 1A DISCHARGE PRESS	77	PMPDIS	37
BFPT A EXTRACTION STEAM FLOW	78	WWFIXB	143
BFPT B EXHAUST PRESSURE	79	PPPTGX	38
	80		
MAIN BFP 1B DISCHARGE PRESS	81	PMPDIS	38
BFPT B EXTRACTION STEAM FLOW	82	WWFIXB	142
GENERATOR GROSS POWER	83	POWER	1
GENERATOR H2 PRESSURE	84	PPGNH2	1
GENERATOR POWER FACTOR	85	POWFAC	1
COND A CW INLET TEMP	86	TTFI	18
COND B CW INLET TEMP	87	TTFI	17
COND C CW INLET TEMP	88	TTFI	16
BOILER BLOWDOWN	89	OPVB	20
PRESSURE EXHAUST LPA	90	PSIPV	12
PRESSURE EXHAUST LPB	91	PSIPV	13
PRESSURE EXHAUST LPC	92	PSIPV	14
APH RETURN TO COND TEMP	93	OPVB	41
ENTHALPY LPA EXHAUST	94	HSIPV	12
ENTHALPY LPB EXHAUST	95	HSIPV	13
ENTHALPY LPC EXHAUST	96	HSIPV	14
MAIN STEAM ATTEMPERATION	97	WWFIXB	608
ENTHALPY 18TH STG EXHAUST	98	HSIPV	10
ENTHALPY 19TH STG A EXHAUST	99	HSIPV	11

IP7018850

ENTHALPY 19TH STG B EXHAUST	100	HSIPV	46
ENTHALPY 19TH STG C EXHAUST	101	HSIPV	47
APH WATER EXTRACTION FLOW	102	WWFIXB	144
FGR EXTRACTION FLOW	103	WWFIXB	145
CYCLE MAKEUP	104	WWVSC	176
SPE BAROMETRIC PRESS	105	PRESHL	30
CGR LOSS FLOW	106	WWFIXB	415
ENTHALPY EXT TO HP HTR #8	107	HEXTLK	3
ENTHALPY EXT TO HP HTR #6	108	HEXTLK	6
ENTHALPY EXT TO LP HTR #4	109	HEXTLK	8
ENTHALPY EXT TO LP HTR #3	110	HEXTLK	9
ENTHALPY EXT TO LP HTR #2	111	HEXTLK	10
BOILER BLOWDOWN (FRAC)	112	OPVB	21
FGR RETURN TEMP	113	OPVB	32
APH FLOW FRAC	114	OPVB	40
FGR FLOW FRACTION	115	OPVB	30
MAIN STEAM ATTEMP FRAC	116	OPVB	50
CYCLE LOSS FLOW FRACTION	117	OPVB	60
APH LEAKAGE	118	WWFIXB	413
APH LOSS FLOW FRACTION	119	OPVB	61

IP7018851

ılues

IP7018852

Unit 2
28-Sep-10
VWO
Start Time 9/28/2010 9:30
End Time 9/28/2010 11:30

	Description	PI Point	Test Value	Units	Test Input Data	Units
1	Main Steam Pressure	2COAXI012A	2273.26	PSIG	**2285.84**	psia
2	Main Steam Temperature	2COAXI015A	1001.21	DEG F	**1001.21**	deg F
3	Main Steam Flow	2COAXI023a	6818.61	KPPH	**6732560**	lbm/hr
4	1st Stage Inlet Pressure	2COAXI042S	2210.50	PSIG	**2223.08**	psia
5	Extraction Pressure HP HTR 8	2TEAPT0021	1030.29	PSIG	**1043.17**	psia
		2TEAPT0022	1030.90	PSIG		
6	HP Section Exhaust Pressure	2SGJPT0012	599.76	PSIG	**612.34**	psia
7	Extraction Pressure HP HTR 6	2TEAPT0017	240.98	PSIG	**253.43**	psia
		2TEAPT0018	240.72	PSIG		
8	IP Section Exhaust Pressure	2TEAPT0023	123.98	PSIG	**136.56**	psia
9	Extraction Pressure LP HTR 4	2TEBPT0055	54.42	PSIG	**67.00**	psia
10	Extraction Pressure LP HTR 3	2TEBPT0054	30.14	PSIG	**42.72**	psia
11	Extraction Pressure LP HTR 2	2TEBPT0053	0.16	PSIG	**12.73**	psia
12	Extraction Pressure LP HTR 1A	2TEBPT0050	-7.25	PSIG	**5.77**	psia
13	Extraction Pressure LP HTR 1B	2TEBPT0051	-7.49	PSIG	**5.51**	psia
14	Extraction Pressure LP HTR 1C	2TEBPT0052	-7.34	PSIG	**5.66**	psia
16	Extraction Temp HP HTR 8	2TEATE0030	784.19	DEG F	**784.65**	deg f
		2TEATE0031	785.11	DEG F		
17	HP Section Exhaust Temp	2SGJTE0024	642.00	DEG F	**642.00**	deg f
18	Extraction Temp HP HTR 6	2TEATE0026	814.09	DEG F	**812.80**	deg f
		2TEATE0027	811.52	DEG F		
19	IP Section Exhaust Temp	2TEATE0157	638.21	DEG F	**638.21**	deg f
20	Extraction Temp LP HTR 4	2TEBTE0164	530.59	DEG F	**530.68**	deg f
		2TEBTE0165	531.47	DEG F		
		2TEBTE0166	529.97	DEG F		
21	Extraction Temp LP HTR 3	2TEBTE0161	432.01	DEG F	**438.42**	deg f
		2TEBTE0162	445.93	DEG F		
		2TEBTE0163	437.32	DEG F		
22	Extraction Temp LP HTR 2	2TEBTE0158	245.94	DEG F	**253.59**	deg f
		2TEBTE0159	261.73	DEG F		
		2TEBTE0160	253.11	DEG F		
24	Reheater Temperature	2COAXI104A	1007.95	DEG F	**1012.26**	deg f
		2COAXI105A	1016.58	DEG F		
25	Hot Reheat Pressure	2SGJPT0006	558.58	PSIG	**570.85**	psia
		2SGJPT0007	557.96	PSIG		
26	Condenser A Shell Pressure	2TGAPE0001	3.23	IN HG	**-3.23**	In Hg
27	Condenser B Shell Pressure	2TGAPE0002	2.61	IN HG	**-2.61**	In Hg
28	Condenser C Shell Pressure	2TGAPE0003	2.34	IN HG	**-2.34**	In Hg
29	HP HTR 8A Shell Inlet Pressure	2TEAPT0021	1030.29	PSIG	**1042.87**	psia
30	HP HTR 8B Shell Inlet Pressure	2TEAPT0022	1030.90	PSIG	**1043.48**	psia
31	HP HTR 7A Shell Inlet Pressure	2TEAPT0019	592.90	PSIG	**605.47**	psia
32	HP HTR 7B Shell Inlet Pressure	2TEAPT0020	593.96	PSIG	**606.54**	psia
33	HP HTR 6A Shell Inlet Pressure	2TEAPT0017	240.98	PSIG	**253.56**	psia
34	HP HTR 6B Shell Inlet Pressure	2TEAPT0018	240.72	PSIG	**253.29**	psia
35	DA Shell Inlet Pressure	2TEAPT0016	121.26	PSIG	**133.84**	psia

36	LP HTR 4 Shell Inlet Pressure	2TEBPT0055	54.42	PSIG	**67.00** psia
37	LP HTR 3 Shell Inlet Pressure	2TEBPT0054	30.14	PSIG	**42.72** psia
38	LP HTR 2 Shell Inlet Pressure	2TEBPT0053	0.16	PSIG	**12.73** psia
39	LP HTR 1A Shell Inlet Pressure	2TEBPT0050	-7.25	PSIG	**5.60** psia
40	LP HTR 1B Shell Inlet Pressure	2TEBPT0051	-7.49	PSIG	**5.34** psia
41	LP HTR 1C Shell Inlet Pressure	2TEBPT0052	-7.34	PSIG	**5.50** psia
43	HP HTR 8A FW Outlet Temp	2FWATE0059	549.96	DEG F	**549.96** deg f
44	HP HTR 8B FW Outlet Temp	2FWATE0154	548.68	DEG F	**548.68** deg f
45	HP HTR 7A FW Outlet Temp	2FWATE0055	487.46	DEG F	**487.46** deg f
46	HP HTR 7B FW Outlet Temp	2FWATE0056	485.56	DEG F	**485.56** deg f
47	HP HTR 6A FW Outlet Temp	2FWATE0053	404.18	DEG F	**404.18** deg f
48	HP HTR 6B FW Outlet Temp	2FWATE0054	404.10	DEG F	**404.10** deg f
49	DA FW Outlet Temp	2FWATE0045	350.35	DEG F	**350.35** deg f
50	LP HTR 4 FW Outlet Temp	2FWCTE0197	303.70	DEG F	**303.63** deg f
		2FWCTE0198	303.55	DEG F	
51	LP HTR 3 FW Outlet Temp	2FWCTE0195	272.24	DEG F	**272.23** deg f
		2FWCTE0196	272.22	DEG F	
52	LP HTR 2 FW Outlet Temp	2FWCTE0193	202.99	DEG F	**202.92** deg f
		2FWCTE0194	202.85	DEG F	
53	LP HTR 1A FW Outlet Temp	2FWCTE0189	164.02	DEG F	**164.02** deg f
54	LP HTR 1B FW Outlet Temp	2FWCTE0190	162.92	DEG F	**162.92** deg f
55	LP HTR 1C FW Outlet Temp	2FWCTE0191	162.65	DEG F	**162.65** deg f
57	HP HTR 8A Drain Outlet Temp	2TEDTE0185	494.93	DEG F	**494.93** deg f
58	HP HTR 8B Drain Outlet Temp	2TEDTE0186	494.37	DEG F	**494.37** deg f
59	HP HTR 7A Drain Outlet Temp	2TEDTE0183	412.97	DEG F	**412.97** deg f
60	HP HTR 7B Drain Outlet Temp	2TEDTE0184	411.74	DEG F	**411.74** deg f
61	HP HTR 6A Drain Outlet Temp	2TEDTE0181	360.78	DEG F	**360.78** deg f
62	HP HTR 6B Drain Outlet Temp	2TEDTE0182	365.05	DEG F	**365.05** deg f
63	LP HTR 4 Drain Outlet Temp	2TEETE0037	281.62	DEG F	**281.62** deg f
64	LP HTR 3 Drain Outlet Temp	2TEETE0036	232.04	DEG F	**232.04** deg f
65	LP HTR 2 Drain Outlet Temp	2TEETE0035	173.40	DEG F	**173.40** deg f
66	LP HTR 1A Drain Outlet Temp	2TEBPE0001	164.75	DEG F	**164.75** deg f
67	LP HTR 1B Drain Outlet Temp	2TEBPE0002	162.81	DEG F	**162.81** deg f
68	LP HTR 1C Drain Outlet Temp	2TEBPE0003	163.90	DEG F	**163.90** deg f
70	BBFP 2A Discharge Pressure	2FWAPT0028	283.57	PSIG	**296.14** psia
71	BBFP 2B Discharge Pressure	2FWAPT0028	283.57	PSIG	**296.14** psia
72	Condensate Pump 1A Discharge Pressure	2HRAPT0008	422.36	PSIG	**434.94** psia
73	Condensate Pump 1B Discharge Pressure	2HRAPT0008	422.36	PSIG	**434.94** psia
75	BFPT 1A Exhaust Pressure	2FWAPT0253	-10.79	PSIG	**1.78** psia
76	BFPT 1A Power Delivered by Shaft	2FWAKK012A	0.00	HP	**0.00** KW
77	Main BFP 1A Discharge Pressure	2FWAPT0029	2815.16	PSIG	**2827.74** psia
79	BFPT 1B Exhaust Pressure	2FWAPT0254	-11.22	PSIG	**1.35** psia
80	BFPT 1B Power Delivered by Shaft	2FWAKK012B	20826.00	HP	**15536.20** KW
81	Main BFP 1B Discharge Pressure	2FWAPT0030	2817.27	PSIG	**2829.85** psia
83	Generator Gross Power	2COAXI027A	949.60	MW	**949598** KW
		2TGBPK0022	949.61		942713 KW
84	Generator H2 Pressure	2TGEPT0185	64.20	PSIG	**64.20** psig
85	Generator Power Factor	2TGBTG0521	0.99		**0.99**
86	Condenser A Circ Water Inlet Temp	2HRCPE0061	94.59	DEG F	**94.59** deg f
87	Condenser B Circ Water Inlet Temp	2HRCPE0062	80.88	DEG F	**80.88** deg f
88	Condenser C Circ Water Inlet Temp	2HRCPE0063	81.01	DEG F	**81.01** deg f
89	Blowdown (boiler losses)	2SGAPE116F	0.00	LBM/HR	**17220** lbm/hr

90	Pressure Exhaust LPA	2TGAPE0001	3.23	IN HG		**1.59**	psia
91	Pressure Exhaust LPB	2TGAPE0002	2.61	IN HG		**1.28**	psia
92	Pressure Exhaust LPC	2TGAPE0003	2.34	IN HG		**1.15**	psia
93	APH Return to Cond Temp	2COAXI127A	78.19	DEG F		**78.19**	deg f
94	Enthalpy LPA Exhaust	Base ELEP				**994.00**	Btu/lbm
95	Enthalpy LPB Exhaust					**994.00**	Btu/lbm
96	Enthalpy LPC Exhaust					**994.00**	Btu/lbm
97	Main Steam Attemperation	2SGAPX3671	283525.75	lb/hr			
		2SGAPX3674	95456.46	lb/hr		**378982**	lbm/hr
98	Enthalpy Exhaust 18th Stage	2COAXI022A	381.50		**381503**	**1151.40**	Btu/lbm
99	Enthalpy 19th Stage A Exhaust					**1094.00**	Btu/lbm
100	Enthalpy 19th Stage B Exhaust					**1094.00**	Btu/lbm
101	Enthalpy 19th Stage C Exhaust	2COAXI115A	38.92			**1094.00**	Btu/lbm
102	APH Extraction Water Flow	2SGCPX3796	0.00	KPPH		[redacted]	lbm/hr
103	CGR Extraction Water Flow	2CCDFT0069	Tag not found	GPM		[redacted]	lbm/hr
	CGR Extraction Temp	2CCDTE0905	Tag not found	DEG F			
	CGR Extraction Pressure	2COAXI111A	120.63	PSIG		133.21	psia
	Specific Volume CGR Extraction	Steam Table	0.01772	FT3/LB			
104	Cycle Makeup Flow	2COAXI113A	1042	lbm/hr		**17220**	lbm/hr
105	SPE Barometric Pressure	2INAPE0001	12.58	PSIA		**12.58**	psia
106	CGR Loss Flow	Manual Input		lbm/hr		**0**	lb/hr
107	Enthalpy Ext to HP HTR 8A	2FWAPX3280	1377.82	Btu/lbm		[redacted]	Btu/lbm
	Enthalpy Ext to HP HTR 8B	2FWAPX3281	1378.35	Btu/lbm			
108	Enthalpy Ext to HP HTR 6A	2FWAPX3284	1430.48	Btu/lbm		[redacted]	Btu/lbm
	Enthalpy Ext to HP HTR 6B	2FWAPX3285	1429.19	Btu/lbm			
109	Enthalpy Ext to LP HTR 4	2FWAPX3287	1297.52	Btu/lbm		[redacted]	Btu/lbm
110	Enthalpy Ext to LP HTR 3	2FWAPX3288	1254.70	Btu/lbm		[redacted]	Btu/lbm
111	Enthalpy Ext to LP HTR 2	2FWAPX3289	1171.02	Btu/lbm		[redacted]	Btu/lbm
112	Boiler Blowdown Flow Fraction					**0.0026**	
113	CGR Return Temp	2CCDTE0905	No Longer Av	DEG F		**100.00**	deg f
114	APH Ext Flow Fraction					**0.0000**	
115	CGR Ext Flow Fraction					**0.0000**	
116	SH Attemp Flow Fraction					**0.0567**	
117	CGR Losses Flow Fraction					**0.0000**	
118	APH Leakage	Manual Input		lbm/hr		**0**	lbm/hr
119	APH Losses Flow Fraction	Calc				**0.0000**	
	Aux Pwr	2APEPE0005	52.24				
	Net load	Calc	897.35				
	Target Backpressure A Cond	2INAPX3081	2.78				
	Target Backpressure B Cond	2INAPX3082	2.33				
	Target Backpressure C Cond	2INAPX3083	2.00				
	A BFPT 1ST STG PRESS	2FWAPT0228	59.10			**122603**	lbm/hr
	B BFPT 1ST STG PRESS	2FWAPT0229	67.89			**133170**	lbm/hr
	A BFP flow	2FWAFT0008	3191.24				
	B BFP flow	2FWAFT0009	3439.93		6631.17	**0.519**	

Description	Test Input Data	Units	
Main Steam Pressure	2285.84	psia	1
Main Steam Temperature	1001.21	deg F	2
Main Steam Flow	6732560	lbm/hr	3
1st Stage Pressure	2223.08	psia	4
Extraction Pressure HP HTR 8	1043.17	psia	5
HP Section Exhaust Pressure	612.34	psia	6
Extraction Pressure HP HTR 6	253.43	psia	7
IP Section Exhaust Pressure	136.56	psia	8
Extraction Pressure LP HTR 4	67.00	psia	9
Extraction Pressure LP HTR 3	42.72	psia	10
Extraction Pressure LP HTR 2	12.73	psia	11
Extraction Pressure LP HTR 1A	5.77	psia	12
Extraction Pressure LP HTR 1B	5.51	psia	13
Extraction Pressure LP HTR 1C	5.66	psia	14
			15
Extraction Temp HP HTR 8	784.65	deg f	16
HP Section Exhaust Temp	642.00	deg f	17
Extraction Temp HP HTR 6	812.80	deg f	18
IP Section Exhaust Temp	638.21	deg f	19
Extraction Temp LP HTR 4	530.68	deg f	20
Extraction Temp LP HTR 3	438.42	deg f	21
Extraction Temp LP HTR 2	253.59	deg f	22
			23
Reheater Temperature	1012.26	deg f	24
Hot Reheat Pressure	570.85	psia	25
Condenser A Shell Pressure	-3.23	In Hg	26
Condenser B Shell Pressure	-2.61	In Hg	27
Condenser C Shell Pressure	-2.34	In Hg	28
HP HTR 8A Shell Inlet Pressure	1042.87	psia	29
HP HTR 8B Shell Inlet Pressure	1043.48	psia	30
HP HTR 7A Shell Inlet Pressure	605.47	psia	31
HP HTR 7B Shell Inlet Pressure	606.54	psia	32
HP HTR 6A Shell Inlet Pressure	253.56	psia	33
HP HTR 6B Shell Inlet Pressure	253.29	psia	34
DA Shell Inlet Pressure	133.84	psia	35
LP HTR 4 Shell Inlet Pressure	67.00	psia	36
LP HTR 3 Shell Inlet Pressure	42.72	psia	37
LP HTR 2 Shell Inlet Pressure	12.73	psia	38
LP HTR 1A Shell Inlet Pressure	5.60	psia	39
LP HTR 1B Shell Inlet Pressure	5.34	psia	40
LP HTR 1C Shell Inlet Pressure	5.50	psia	41
			42
HP HTR 8A FW Outlet Temp	549.96	deg f	43
HP HTR 8B FW Outlet Temp	548.68	deg f	44
HP HTR 7A FW Outlet Temp	487.46	deg f	45
HP HTR 7B FW Outlet Temp	485.56	deg f	46
HP HTR 6A FW Outlet Temp	404.18	deg f	47

HP HTR 6B FW Outlet Temp	**404.10**	deg f	48
DA FW Outlet Temp	**350.35**	deg f	49
LP HTR 4 FW Outlet Temp	**303.63**	deg f	50
LP HTR 3 FW Outlet Temp	**272.23**	deg f	51
LP HTR 2 FW Outlet Temp	**202.92**	deg f	52
LP HTR 1A FW Outlet Temp	**164.02**	deg f	53
LP HTR 1B FW Outlet Temp	**162.92**	deg f	54
LP HTR 1C FW Outlet Temp	**162.65**	deg f	55
			56
HP HTR 8A Drain Outlet Temp	**494.93**	deg f	57
HP HTR 8B Drain Outlet Temp	**494.37**	deg f	58
HP HTR 7A Drain Outlet Temp	**412.97**	deg f	59
HP HTR 7B Drain Outlet Temp	**411.74**	deg f	60
HP HTR 6A Drain Outlet Temp	**360.78**	deg f	61
HP HTR 6B Drain Outlet Temp	**365.05**	deg f	62
LP HTR 4 Drain Outlet Temp	**281.62**	deg f	63
LP HTR 3 Drain Outlet Temp	**232.04**	deg f	64
LP HTR 2 Drain Outlet Temp	**173.40**	deg f	65
LP HTR 1A Drain Outlet Temp	**164.75**	deg f	66
LP HTR 1B Drain Outlet Temp	**162.81**	deg f	67
LP HTR 1C Drain Outlet Temp	**163.90**	deg f	68
			69
BBFP 2A Discharge Pressure	**296.14**	psia	70
BBFP 2B Discharge Pressure	**296.14**	psia	71
Condensate Pump 1A Discharge Pr	**434.94**	psia	72
Condensate Pump 1B Discharge Pr	**434.94**	psia	73
			74
BFPT 1A Exhaust Pressure	**1.78**	psia	75
BFPT 1A Power Delivered by Shaft	**0.00**	KW	76
Main BFP 1A Discharge Pressure	**2827.74**	psia	77
BFPT 1A Extraction Steam Flow	**122602.79**	lbm/h	78
BFPT 1B Exhaust Pressure	**1.35**	psia	79
BFPT 1B Power Delivered by Shaft	**15536.20**	KW	80
Main BFP 1B Discharge Pressure	**2829.85**	psia	81
BFPT 1B Extraction Steam Flow	**133170.03**	lbm/h	82
Generator Gross Power	**949598**	KW	83
Generator H2 Pressure	**64.20**	psig	84
Generator Power Factor	**0.99**		85
Condenser A Circ Water Inlet Temp	**94.59**	deg f	86
Condenser B Circ Water Inlet Temp	**80.88**	deg f	87
Condenser C Circ Water Inlet Temp	**81.01**	deg f	88
Blowdown (boiler losses)	**17220.00**	lbm/hr	89
Pressure Exhaust LPA	**1.59**	psia	90
Pressure Exhaust LPB	**1.28**	psia	91
Pressure Exhaust LPC	**1.15**	psia	92
APH Return to Cond Temp	**78.19**	deg f	93
Enthalpy LPA Exhaust	**994.00**	Btu/lbm	94
Enthalpy LPB Exhaust	**994.00**	Btu/lbm	95
Enthalpy LPC Exhaust	**994.00**	Btu/lbm	96
Main Steam Attemperation	**378982**	lbm/hr	97
Enthalpy Exhaust 18th Stage	**1151.40**	**Btu/lbm**	98
Enthalpy 19th Stage A Exhaust	**1094.00**	Btu/lbm	99

Enthalpy 19th Stage B Exhaust	**1094.00**	Btu/lbm	100
Enthalpy 19th Stage C Exhaust	**1094.00**	Btu/lbm	101
APH Extraction Water Flow	**0.00**	lbm/hr	102
CGR Extraction Water Flow	**0.00**	lbm/hr	103
Cycle Makeup Flow	**17220**	lbm/hr	104
SPE Barometric Pressure	**12.58**	psia	105
CGR Loss Flow	**0.00**	lb/hr	106
Enthalpy Ext to HP HTR 8A/8B	**1377.29**	Btu/lbm	107
Enthalpy Ext to HP HTR 6A/6B	**1429.93**	Btu/lbm	108
Enthalpy Ext to LP HTR 4	**1297.62**	Btu/lbm	109
Enthalpy Ext to LP HTR 3	**1254.90**	Btu/lbm	110
Enthalpy Ext to LP HTR 2	**1171.14**	Btu/lbm	111
Boiler Blowdown Flow Fraction	**0.0026**		112
CGR Return Temp	**100.00**	deg f	113
APH Ext Flow Fraction	**0.0000**		114
CGR Ext Flow Fraction	**0.0000**		115
SH Attemp Flow Fraction	**0.0567**		116
CGR Losses Flow Fraction	**0.0000**		117
APH Leakage	**0.0000**	lbm/hr	118
APH Losses Flow Fraction	**0.0000**		119

7883.68 Net Turbine Cycle Heat Rate 91.6 % HP Efficiency 92.1 % IP Efficiency

U2 Test Data Reduction

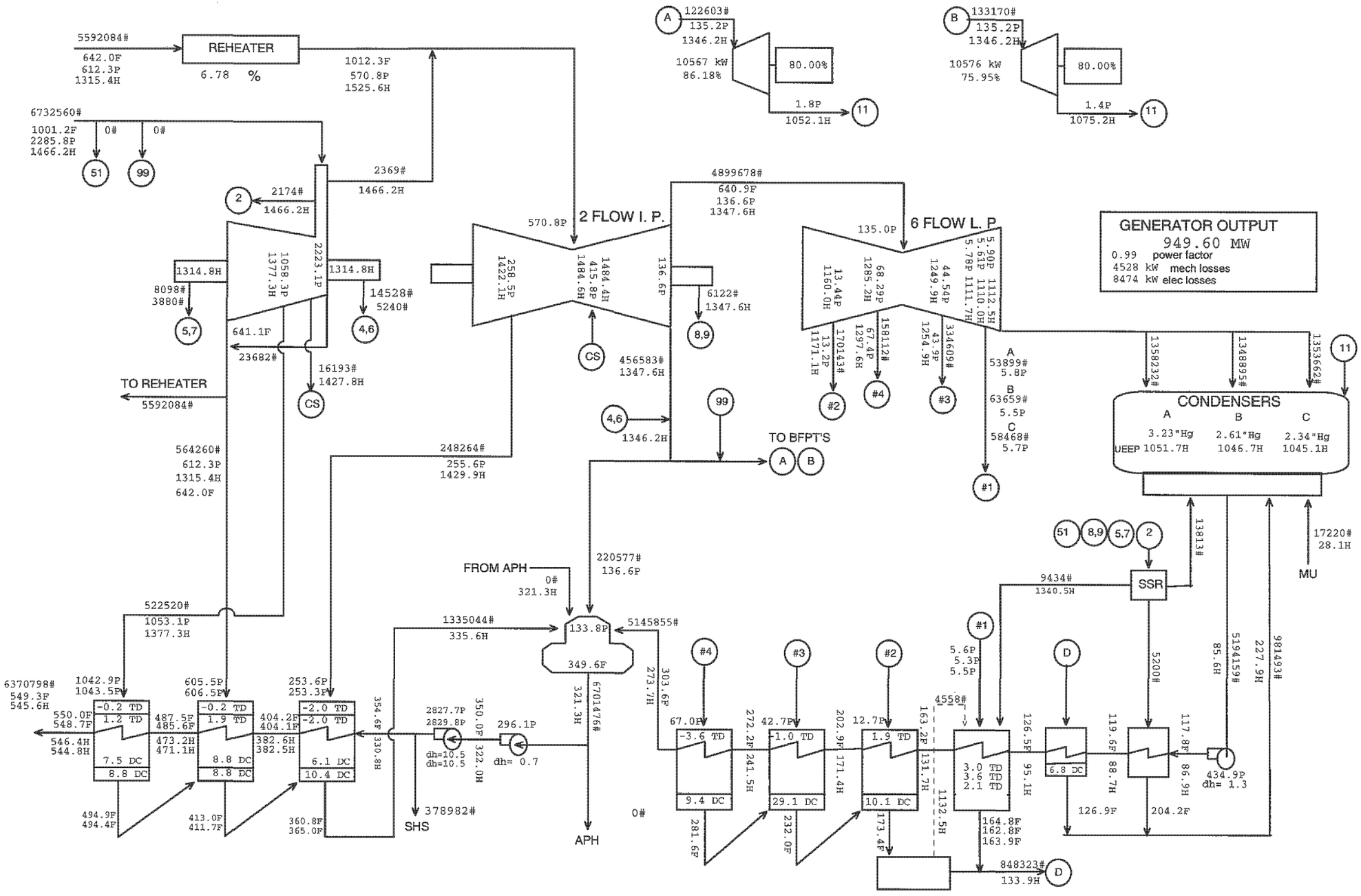

IGS - Unit 2 TPM Test 950 MW VWO Reduced Throttle P

9-28-10 09:30 - 11:30 test data reduction

IP7018859

```
LISTING OF INPUT DATA FOR CASE  1

010001  80  PRINT
010101   0.0
*
*
*        DATE: Wednesday, September 29, 2010
*        TIME: 2:33 PM
*       MODEL: C:\PEPSE\2TPM\2ALSTOM.MDL
*    JOB FILE: C:\PEPSE\2TPM\2ALSTOM.JOB
*
*
*
*
=IPP - OPERATING MODEL - VWO
*
000200   1
*
*
*****************************
*  GENERIC INPUT DATA
*****************************
*
*
*
* IPP - OPERATING MODEL - VWO - NP - 859.479
010200   2  3  1  1  1  0  0.0  0.0  0  0  0  0  0  0  0  0.0
010201   3  0.0  0.0  0.0  0.0  0.0  0.0
*
010000  ENGLISH  ENGLISH
*
*
* GENERATOR FLAGS AND DATA
011010   1  2  1  0  3600  991000.  0.9  63.  63.  973186.
011011   4528.  9902.  259.5
*
*
*
* MATERIAL PROPERTIES CALCULATION FLAG
010202   1  0.0
*
* SPECIFIC HEAT CALCULATION FLAG
012003   0
*
* RADIATION HEAT TRANSFER FLAGS
012004   0  0  0
*
* TURBINE PRESSURE CALCULATION FLAGS
039999   0  0  0  0
*
* TURBINE EXTRACTION STEAM ENTHALPY SWITCHES
039998   0  0
*
* OUTPUT GLOBAL SUPPRESSION CARD
```

IP7018860

```
*
012000   100  10.  0.0  0.0  0.0  50.  0  0.0  -1  2  10  10  0
*
* PC DISPLAY VARIABLES
080001 PPVSC  59  WW  684
080002 BKGROS  0  WW  152
080003 WW  151  HH  79
*
****************************
*  STREAMS
*****************************
*
*
500590   59   U      116   I
501160  116   U      117   I
500150   15   T       67  IA
500670   67   U        5   I
500050    5   U       68  IA
501190  116   B       82  IA
502220  117   B       98  IB
501250  118   B      119   I
501570  119   B       82  IB
501460  139   U       65   I
501450  139   B       89  IB
500500   20   D      139   I
500710   71   U      134   I
500240   20   T       72  IA
500720   72   U       73  IA
502180  138   B       88  IB
500510   21   D      138   I
501490  138   U       20   D
501440  134   B       72  IB
500250   21   T       74  IA
500730   73   U      135   I
501390  135   U       21   T
500740   74   U      136   I
501400  136   U       22   T
500520   22   D      137   I
502200  137   B       87  IB
500260   22   T       75  IA
501500  136   B       75  IB
502190  137   U       21   D
501470  135   B       74  IB
501920  144   B       32   T
501940  145   B       33   T
501930  144   U      145   I
502070  145   U      148   I
502000  148   B       34   I
502030  153   B       38  IP
502020  153   U       37  IP
500640   38  UT       87  IA
500630   37  UT       80  IB
500760   38  UP      106  IB
501060  106   U      155   I
```

IP7018861

501650	160	B	95	IC
501640	161	B	94	IC
501630	162	B	93	IA
500340	24	T	26	T
500320	26	T	28	T
500350	28	D	162	I
500360	26	D	161	I
500370	24	D	160	I
501620	162	U	26	D
501610	161	U	24	D
501680	168	U	28	S
501670	167	U	26	S
501660	166	U	24	S
502240	166	B	25	S
501700	167	B	27	S
501690	168	B	29	S
500330	28	T	114	IA
500460	29	T	115	IA
501150	115	U	114	IB
500750	75	U	23	FW
500100	10	U	305	I
506080	155	U	608	I
500420	34	U	101	IB
501960	148	U	35	I
500430	35	U	101	IA
501010	101	U	150	I
506000	150	U	600	IA
502040	150	B	109	IB
501990	600	U	36	I
502010	36	U	153	I
500440	36	B	781	IC
501520	143	B	37	IT
501860	125	B	84	IB
501840	124	B	125	I
500070	6	U	7	I
507770	7	U	127	I
504200	37	UP	106	IA
500680	68	U	6	I
504110	6	E	403	I
501270	127	U	8	I
500080	8	U	9	I
500090	9	U	10	I
501590	159	U	158	I
501720	158	U	25	T
501580	158	B	24	T
501770	159	B	115	IB
506840	3	E	401	I
501830	123	B	83	IB
500660	66	U	126	I
501710	126	B	402	I
501140	114	U	64	I
500970	97	U	98	IA
501510	142	B	38	IT
501420	142	U	23	S

IP7018862

500990	99	U	100	IB
501090	109	U	100	IA
501000	100	U	23	D
504160	415	B	416	I
501910	146	B	99	IA
501260	126	U	610	IA
506130	610	U	15	T
506090	608	B	400	I
506110	608	U	609	I
504040	8	E	22	S
504050	9	E	21	S
504060	10	E	20	S
501380	134	U	20	T
500270	23	D	144	I
504210	413	B	417	I
501870	146	U	413	I
504130	413	U	90	IB
500190	19	T	334	IA
502250	219	T	334	IB
503190	319	T	334	IC
503340	334	U	71	IA
503210	319	D	303	IB
500210	19	D	302	IB
502260	219	D	301	IB
503010	301	U	302	IA
503020	302	U	303	IA
500690	65	U	301	IA
501540	151	U	19	T
501530	151	C	319	T
501550	151	B	219	T
500310	31	T	151	I
501330	133	U	31	T
501340	133	B	71	IB
500300	30	T	133	I
503030	303	U	31	S
500490	31	D	781	IB
502080	174	U	81	IA
500570	30	D	80	IA
500830	80	U	174	IA
502110	141	B	450	IB
500180	16	D	140	IA
500230	16	T	18	T
500620	18	T	62	IA
501050	62	U	63	I
500170	17	T	62	IB
501070	60	U	61	I
501080	61	U	16	T
501290	61	B	17	T
503050	305	U	46	I
503060	305	B	47	I
503070	305	C	11	I
500800	46	E	19	S
500140	14	U	18	S
500130	13	U	17	S

IP70188863

501020	84	U	85	IA
501040	44	U	30	T
502130	69	U	44	I
500580	42	U	69	IB
500600	43	U	69	IA
501350	131	U	42	I
502120	131	B	43	I
500220	18	D	131	I
500610	44	B	600	IB
500900	90	U	781	IA
500120	11	E	450	IA
504500	450	U	219	S
500930	93	U	94	IA
500940	94	U	95	IA
500950	95	U	81	IB
500810	47	E	999	IA
500700	65	B	999	IB
509990	999	U	319	S
507810	781	U	16	D
500840	81	U	404	IA
504140	404	U	405	IA
504170	406	U	175	IA
504190	405	U	406	IA
501560	122	B	67	IB
501800	120	B	68	IB
502100	40	U	30	S
501280	129	U	85	IB
501730	163	U	111	IB
506120	609	U	159	I
500960	96	U	97	IB
501200	120	U	3	I
501310	122	U	66	IB
501360	125	U	96	IA
501300	123	U	96	IB
500280	7	E	97	IA
500030	3	U	4	I
501220	119	U	122	I
500540	39	U	118	I
501170	117	U	39	I
501180	118	U	1	I
500040	4	U	121	I
501230	121	B	123	I
501210	121	U	124	I
501370	128	U	66	IA
501240	124	U	128	I
500470	128	B	40	IB
501480	127	B	129	I
501810	129	B	40	IC
501410	141	U	174	IB
501820	173	U	141	I
500010	1	U	120	I
500850	85	U	173	I
500480	173	B	40	IA

*

IP7018864

```
   +
   +
   +   0.0
*
* PRESSURE DROP HP HTR 6A TO 7A
600340   1  16.3  90.1667  0.0  0.0  0.00012  4748.917  4722.75  0.0  0.0  0.0
   +
   +
   +   0.0
*
* PRESSURE DROP HP HTR 7A TO 8A
600320   1  16.3  78.8333  0.0  0.0  0.00012  4763.75  4748.917  0.0  0.0  0.0
   +
   +
   +   0.0
*
* PRESSURE DROP BFP to #6 htrs
601590   1  16.3  53.25  0.0  0.0  0.00012  4722.75  4697.5  0.0  0.0  0.0
   +  0.0
*
* PRESSURE DROP 8 htr to Econ
601140   1  16.3  342.125  0.0  0.0  0.00012  4793.875  4763.75  0.0  0.0  0.0
   +
   +
   +   0.0
*
* PRESSURE DROP LP HTR 4 TO DA
600260   2  0.26872  0.0  0.0  0.0  0.0  0.0  0.0  0.0
*
* PRESS DROP EXT LINE TO FW HTR #8A 0.00939
601680   2  0.0104  0.0  0.0  0.0  0.0  0.0  0.0  0.0
*
* PRESS DROP EXT LINE TO FW HTR #7A 0.02019
601670   2  0.0219  0.0  0.0  0.0  0.0  0.0  0.0  0.0
*
* PRESS DROP EXT LINE TO HP HTR #6A .00851
601660   2  0.0077  0.0  0.0  0.0  0.0  0.0  0.0  0.0
*
* PRESS DROP EXT LINE TO HP HTR #6B .00851
602240   2  0.0077  0.0  0.0  0.0  0.0  0.0  0.0  0.0
*
* PRESS DROP EXT LINE TO FW HTR #7B 0.02019
601700   2  0.0219  0.0  0.0  0.0  0.0  0.0  0.0  0.0
*
* PRESS DROP EXT LINE TO FW HTR #8B 0.00939
601690   2  0.0104  0.0  0.0  0.0  0.0  0.0  0.0  0.0
*
* EXTRACTION PRESS DROP TO A BFPT 0.01073
601520   2  0.0101  0.0  0.0  0.0  0.0  0.0  0.0  0.0
*
* PRESS DROP CROSSOVER FROM IP TO LP TURB
601270   2  0.0115  0.0  0.0  0.0  0.0  0.0  0.0  0.0
*
* EXTRACTION PRESS DROP TO B BFPT 0.01228
```

IP7018865

```
* PRESSURE DROP LP HTR 1 AND 2
603340   2  0.21464  0.0  0.0  0.0  0.0  0.0  0.0  0.0
*
* PRESSURE DROP DC TO HP HTR 1
600300   2  0.45696  0.0  0.0  0.0  0.0  0.0  0.0  0.0
*
* PRESS DROP EXT LINE TO FWH 1B
600800   2  0.0296  0.0  0.0  0.0  0.0  0.0  0.0  0.0
*
* PRESS DROP EXT LINE TO FWH 1A
604500   2  0.0296  0.0  0.0  0.0  0.0  0.0  0.0  0.0
*
* PRESS DROP EXT LINE TO FWH 1C
600810   2  0.0296  0.0  0.0  0.0  0.0  0.0  0.0  0.0
*
* PRESSURE DROP BFP to HP Htrs
606120   2  0.01205  0.0  0.0  0.0  90.1667  0.0  0.0  0.0
*
* Pressure drop to flash tank
601460   5  10.  0.0
*
* PRESS DROP TO FLASH TANK
600500   5  10.  0.0
*
******************************
*  COMPONENTS
******************************
*
*
*
* Governing stage combined 1st and 2nd stages
700010   4  1  1  1  1  0
700011   1  0  47.4795
700012   0.0  0.0  0.0  0.0  0.0  0
700018   1.10528
*
* HP TURBINE STAGE GROUP 6-8
700040   5  1  1  0  1  0.0
700041   1101.3  1366.9  6262340.  629.  0.0
700042   0.0  0.0  0.0  0.0
700045   0.0
700046
700047   0
700048   0.0  0.0  0.0
*
* HP TURBINE STAGE GROUP 3-5
700030   5  1  0  1  1  0.004994
700031   1706.5  1423.1  6852975.  1101.3  590635.
700032   0.0  0.0  0.0  0.0
700035   0.0
700036
700037   0
700038   0.0  518.113  0.0
*
```

IP7018866

```
700068   0.0  0.0  0.0
*
* IP TURBINE 8TH STAGE
700050   6  1  0  0  2  2  0.0
700051   585.5  1518.4  5615726.  416.8  0.0
700052   0.0  0.0  0.0  0.0  0.0  0.0  0.0
700055   0.0
700056
700058   0.0  0.0  0.0
*
* LP TURBINE C 19TH STAGE
700470   7  1  1  1  3  2  0.01193
700471   12.87  1151.4  1402027.3  5.3286  67221.3  0.0
700472   0.0  0.0  0.0  0.0  0.0
700473   0  0.0  0.0  0  0.0
700475   0.0
700476
700478   0.0  543.071  0.0
*
* LP TURBINE B 19TH STAGE
700460   7  1  1  1  3  2  0.01193
700461   12.87  1151.4  1402027.3  5.3286  68274.3  0.0
700462   0.0  0.0  0.0  0.0  0.0
700463   0  0.0  0.0  0  0.0
700465   0.0
700466
700468   0.0  541.286  0.0
*
* LP TURBINE A 20TH STAGE
700140   7  1  3  0  3  2  0.0
700141   5.3286  1094.  1344759.  -4.42  0.0  55.6
700142   0.0  0.0  0.0  0.0  0.0
700143   1  0.0  0.0  0  0.0
700145   4755310.
700146
700148   0.0  0.0  0.0
*
* LP TURBINE B 20TH STAGE
700130   7  1  3  0  3  2  0.0
700131   5.3286  1094.  1333753.  -4.26  0.0  55.6
700132   0.0  0.0  0.0  0.0  0.0
700133   1  0.0  0.0  0  0.0
700135   4717890.
700136
700138   0.0  0.0  0.0
*
* LP TURBINE C 20TH STAGE
700120   7  1  3  0  3  2  0.0
700121   5.3286  1094.  1334806.  -3.38  0.0  55.6
700122   0.0  0.0  0.0  0.0  0.0
700123   1  0.0  0.0  0  0.0
700125   4720130.
700126
700128   0.0  0.0  0.0
```

IP7018867

```
700103   0  0.0  0.0  0  0.0
700105   2229260.
700106   0.00292  0.0  0.0  0.0  0.0  0.0
700108   0.0  0.0  0.0
*
* LP TURBINE 16TH STAGE
700090   7  1  1  1  3  6  0.01376
700091   72.92  1287.2  4714246.  44.32  333703.  0.0
700092   0.0  0.0  0.0  0.0  0.0
700093   0  0.0  0.0  0  0.0
700095   0.0
700096
700098   0.0  601.504  0.0
*
* LP TURBINE 15TH STAGE
700080   7  1  0  1  3  6  0.0126
700081   137.2  1340.2  4882002.  72.92  166877.  0.0
700082   0.0  0.0  0.0  0.0  0.0
700083   0  0.0  0.0  0  0.0
700085   0.0
700086   0.00018  0.0  0.0  0.0  0.0  0.0
700088   0.0  0.0  0.0
*
720180 "CONDENSER #A"
*
* CONDENSER #A
700180   10  1  2  0.0  -2.99
700181   0.0  0.0  0.0  0.0  0.0  0.0
700182   0.0  0.0  0.0  0.0  0.0
710184   0.0  0  0
700183
700184
700185
700186
700187
700188
710181
710182
710183
710185
700189   0.0  0.0  0.0  0.0  0
*
720170 "CONDENSER #B"
*
* CONDENSER #B
700170   10  0  2  0.0  -2.24
700171   0.0  0.0  0.0  0.0  0.0  0.0
700172   0.0  0.0  0.0  0.0  0.0
710174   0.0  0  0
700173
700174
700175
700176
700177
```

IP7018868

```
700163
700164
700165
700166
700167
700168
710161
710162
710163
710165
700169   0.0  0.0  0.0  0.0  0
*
723190 "FEEDWATER HEATER #1C"
*
* FEEDWATER HEATER #1C
703190   14  0  47  3  0.0  0.5
703191   0.0  0.0  0.0  0.0  0.0  0.0
703192   0.0  0.0  0.0  0.0  0.0  0.0  0.0  1  0
703193
703194
703195
703196
703197
703198
713191
713193
713195
713198
703199   0  0  0.75  0.0  0.0  0.1  0.0  0.0  0.5  0.0  0  0  0  0.0  0.0  0
713190 0
713197   0
*
722190 "FEEDWATER HEATER #1A"
*
* FEEDWATER HEATER #1A
702190   14  0  11  3  0.0  0.5
702191   0.0  0.0  0.0  0.0  0.0  0.0
702192   0.0  0.0  0.0  0.0  0.0  0.0  0.0  1  0
702193
702194
702195
702196
702197
702198
712191
712193
712195
712198
702199   0  0  0.75  0.0  0.0  0.1  0.0  0.0  0.5  0.0  0  0  0  0.0  0.0  0
712190 0
712197   0
*
720190 "FEEDWATER HEATER #1B"
*
```

IP7018869

```
700199   0  0  0.75  0.0  0.0  0.1  0.0  0.0  0.5  0.0  0  0  0  0.0  0.0  0
710190 0
710197   0
*
720230 "FEEDWATER HEATER #5 - DEAERATOR"
*
* FEEDWATER HEATER #5 - DEAERATOR
700230   15  1  7  0.0  0.0
700231   0.0  0.0  0.0  0.0  0.0  0.0
700232   0.0  0.0  0.0  0.0  0  0.0  0.0  0  0
700239   0  0  0.75  0.1  0
710230 0
710237   0
*
720220 "FEEDWATER HEATER #4"
*
* FEEDWATER HEATER #4
700220   16  0  8  3  0.0  0.5  5.5
700221   0.0  0.0  0.0  0.0  0.0  0.0
700222   0.0  0.0  0.0  0.0  0.0  0.0  0.0  0  0
700223
700224
700225
700226
700227
700228
710221
710223
710225
710228
700229   0  0  0.75  0.0  0.0  0.1  8.  1.  0.5  5.5  0  0  0  0.0  0.0  0
710220 0
710227   0
*
720210 "FEEDWATER HEATER #3"
*
* FEEDWATER HEATER #3
700210   16  1  9  3  0.0  0.3  10.
700211   0.0  0.0  0.0  0.0  0.0  0.0
700212   0.0  0.0  0.0  0.0  0.0  0.0  0.0  0  0
700213
700214
700215
700216
700217
700218
710211
710213
710215
710218
700219   0  0  0.75  0.0  0.0  0.1  18.  1.  0.3  10.  0  0  1  0.0  0.0  0
710210 0
710217   0
*
```

IP7018870

```
710205
710208
700209   0  0  0.75  0.0  0.0  0.1  20.  1.  1.9  8.3  0  0  1  0.0  0.0  0
710200 0
710207   0
*
720290 "FEEDWATER HEATER #8B"
*
* FEEDWATER HEATER #8B
700290   18  0  168  3  0.0  2.2  8.47
700291   0.0  0.0  0.0  0.0  0.0  0.0
700292   0.0  0.0  0.0  15.72  0.0  0.0  0.0  0  0
700293
700294
700295
700296
700297
700298
710291
710293
710295
710298
700299   0  0  0.75  0.0  0.0  0.1  15.  1.  2.2  8.47  0  0  1  0.0  0.0  0
710290 0
710297   0
*
720280 "FEEDWATER HEATER #8A"
*
* FEEDWATER HEATER #8A
700280   18  0  3  3  0.0  2.2  8.47
700281   0.0  0.0  0.0  0.0  0.0  0.0
700282   0.0  0.0  0.0  15.72  0.0  0.0  0.0  0  0
700283
700284
700285
700286
700287
700288
710281
710283
710285
710288
700289   0  0  0.75  0.0  0.0  0.1  15.  1.  2.2  8.47  0  0  1  0.0  0.0  0
710280 0
710287   0
*
720270 "FEEDWATER HEATER #7B"
*
* FEEDWATER HEATER #7B
700270   18  1  167  3  0.0  0.3  9.7
700271   0.0  0.0  0.0  0.0  0.0  0.0
700272   0.0  0.0  0.0  15.65  0.0  0.0  0.0  0  0
700273
```

IP7018871

```
* FEEDWATER HEATER #7A
700260   18  1  126  3  0.0  0.3  9.7
700261   0.0  0.0  0.0  0.0  0.0  0.0
700262   0.0  0.0  0.0  15.65  0.0  0.0  0.0  0  0
700263
700264
700265
700266
700267
700268
710261
710263
710265
710268
700269   0  0  0.75  0.0  0.0  0.1  15.  1.  0.3  9.7  0  0  1  0.0  0.0  0
710260 0
710267   0
*
720250 "FEEDWATER HEATER #6B"
*
* FEEDWATER HEATER #6B
700250   18  1  166  3  0.0  -0.4  8.4
700251   0.0  0.0  0.0  0.0  0.0  0.0
700252   0.0  0.0  0.0  15.64  0.0  0.0  0.0  0  0
700253
700254
700255
700256
700257
700258
710251
710253
710255
710258
700259   0  0  0.75  0.0  0.0  0.1  15.  1.  -0.4  8.4  0  0  1  0.0  0.0  0
710250 0
710257   0
*
720240 "FEEDWATER HEATER #6A"
*
* FEEDWATER HEATER #6A
700240   18  1  6  3  0.0  -0.4  8.4
700241   0.0  0.0  0.0  0.0  0.0  0.0
700242   0.0  0.0  0.0  15.64  0.0  0.0  0.0  0  0
700243
700244
700245
700246
700247
700248
710241
710243
710245
```

IP7018872

```
700309
710301
710303
*
* DRAIN COOLER
700310   23  6.8
700311   0.0  0.0  0.0  0.0  0.0  0.0  0.0  0.0  0.0
700315
700316
700317
700318
700319
710311
710313
*
* REHEATER
700150   25  2  1000.
700151   0.067  0.0  0.0  0.0  0.0  0.0
700155
700156
700159   0.0
*
* FLUE GAS REHEATER
700330   27  -28127400.  0.0  0.0  0.0
700331   197.5
700339   0.0
*
* AIR PREHEATER
700320   27  -1.17680000E+008  0.0  0.0  0.0
700321   0.0
700329   0.0
*
* APH CYCLE LEAKAGE SINK
704170   30
704172   0
*
* CGR CYCLE LEAKAGE SINK
704160   30
704162   0
*
* SH SPRAY FLOW
704000   30
704002   0
*
* HOT CIRC WATER TO COOLING TOWERS
700630   30
700632   0
*
* CYCLE MAKEUP SOURCE
701760   31  60.  15.  69000.  0.0  0.0  0
701762  0  0 0
*
* COLD CIRC WATER FROM COOLING TOWERS
700690   31  72.3  50.  1.43650000E+008  0.0  0.0  0
```

IP7018873

```
700399   0.0  0.0  0.0
*
* TURBINE DRIVEN BF PUMP B
700380   40  142  2988.4  -1.66  0.0  0.8
700381   0.0  0.85  0.0  0.0  0.0  0.0  0.0  0.0  0  0
700386   0
700389   0.0  0  0.0
710380 0
*
* TURBINE DRIVEN BF PUMP A
700370   40  143  2988.4  -2.99  0.0  0.8
700371   0.0  0.85  0.0  0.0  0.0  0.0  0.0  0.0  0  0
700376   0
700379   0.0  0  0.0
710370 0
*
* CONDENSATE PUMP B
700430   41  410.096  0.95  0.0  0.0
700431   0.0  0.0  0.0  0.0  0.0  0.0
700436   0
*
* CONDENSATE PUMP A
700420   41  410.096  0.95  0.0  0.0
700421   0.0  0.0  0.0  0.0  0.0  0.0
700426   0
*
* BOOSTER BF PUMP B
700350   41  312.4  0.95  0.0  0.0
700351   0.0  0.7  0.0  0.0  0.0  0.0
700356   0
*
* BOOSTER BF PUMP A
700340   41  312.4  0.95  0.0  0.0
700341   0.0  0.7  0.0  0.0  0.0  0.0
700346   0
*
* FW PUMP SEAL INJECTION MIXER
706000   50  1  0.0
706002   0.0
*
* FW HTR TRAIN BYPASS MIXER
701150   50  1  0.0
701152   0.0
*
* HP HTR TRAINS FW OUTLET
701140   50  1  0.0
701142   0.0
*
* BFP FW HEADER MIXER
701060   50  0  0.0
701062   0.0
*
* BBFP HEADER MIXER
701010   50  1  0.0
```

IP7018874

```
* FW HTR 2 BYPASS MIXER
700720   50  1  0.0
700722   0.0
*
* FW HTR 1 BYPASS MIXER
700710   50  1  0.0
700712   0.0
*
* CONDENSATE PUMP MIXER
700690   50  1  0.0
700692   0.0
*
* TURBINE COOLING STEAM ADMISSION MIXER
700680   50  1  0.0
700682   0.0
*
* STANDARD MIXER
700670   50  1  0.0
700672   0.0
*
* STANDARD MIXER
700660   50  1  0.0
700662   0.0
*
* CIRC WATER MIXER
700620   50  0  0.0
700622   0.0
*
* FLASH TANK MIXER
709990   51  1  0.0
709992   0.0
*
* MSA MIXER
706100   51  1  0.0
706102   0.0
*
* SSR TO LP HTR 1A
704500   51  1  0.0
704502   0.0
*
* HP HTR 6 EXT STEAM LEAKAGE TO CONDENSER
704060   51  0  0.0
704062   0.0
*
* HP HTR 7 EXT STEAM LEAKAGE TO CONDENSER
704050   51  0  0.0
704052   0.0
*
* HP HTR 8 EXT STEAM LEAKAGE TO CONDENSER
704040   51  0  0.0
704042   0.0
*
* FW HTR 1C DRAINS MIXER
703030   51  0  0.0
```

IP7018875

```
* DRAINS MIXER
701740   51  0  0.0
701742   0.0
*
* CONDENSER A & B DRAINS MIXER
701400   51  0  0.0
701402   0.0
*
* MAKEUP MIXER WITH CONDENSER
701320   51  0  0.0
701322   0.0
*
* HP HTRS DRAINS MIXER
701110   51  1  0.0
701112   0.0
*
* BFP RECIRC TO DA
701100   51  1  0.0
701102   0.0
*
* BBFP RECIRC TO DA
701090   51  1  0.0
701092   0.0
*
* HP HTR DRAINS & FGR TO DA MIXER
701000   51  1  0.0
701002   0.0
*
* FGR AND APH RETURN TO DA
700990   51  1  0.0
700992   0.0
*
* LOW LOAD MAIN STEAM TO DA
700980   51  1  0.0
700982   0.0
*
* HP TURBINE LEAKAGE TO DA
700970   51  1  0.0
700972   0.0
*
* HP TURBINE LEAKAGE TO DA
700960   51  0  0.0
700962   0.0
*
* HP HTS 8A & 8B DRAINS TO CONDENSER MIXER
700930   51  0  0.0
700932   0.0
*
* APH RETURN TO CONDENSER
700900   51  0  0.0
700902   0.0
*
* LP HTR 2 EMERGENCY DRAIN TO CONDENSER
700890   51  0  0.0
```

IP7018876

```
* LEAKAGE MIXER TOWARDS CONDENSER
700840   51  0  0.0
700842   0.0
*
* LEAKAGE MIXER TOWARDS CONDENSER
700830   51  0  0.0
700832   0.0
*
* LEAKAGE MIXER TOWARDS CONDENSER
700820   51  0  0.0
700822   0.0
*
* DRAINS TO COND MIXER
700810   51  0  0.0
700812   0.0
*
* SPE EXHAUST MIXER
700800   51  1  0.0
700802   0.0
*
* LO MIXER
707810   54  0  0.0
707812   0.0
*
* FW FROM LP HTRS 1A,B,&C MIXER
703340   54  0  0.0
703342   0.0
*
* HP HTRS 6A & 6B DRAIN TO CONDENSER MIXER
700950   54  0  0.0
700952   0.0
*
* HP HTRS 7A & 7B DRAIN TO CONDENSER MIXER
700940   54  0  0.0
700942   0.0
*
* HP LEAKAGE SPLITTER
700400   54  0  0.0
700402   0.0
*
* SPLITTER EXT TO HP HTR 8A&B
701680   60  0.0  290608.5  0.0  0  0.0  0.0  0.0
701681   0  0
*
* SPLITTER EXT TO HP HTR 7A&B
701670   60  0.0  317505.  0.0  0  0.0  0.0  0.0
701671   0  0
*
* SPLITTER EXT TO HP HTR 6A&B
701660   60  0.0  131550.  0.0  0  0.0  0.0  0.0
701661   0  0
*
* HP FW HTR #7 EXTRACTION
701260   60  0.0  640162.  0.0  0  0.0  0.0  0.0
```

IP7018877

```
706080   61  0.0  0.0
*
* CGR CYCLE LEAKAGE
704150   61  0.0  56530.
*
* APH LEAKAGE FLOW SPLITTER
704130   61  0.0  0.0
*
* HP HTR 6 EXTRACTION STEAM LEAKAGE
704030   61  0.0  0.0
*
* HP HTR 7 EXTRACTION STEAM LEAKAGE
704020   61  0.0  0.0
*
* HP HTR 8 EXTRACTION STEAM LEAKAGE
704010   61  0.0  0.0
*
* SPE SPLITTER
701730   61  0.0  5200.
*
* FLOW TO FGR
701450   61  0.0  0.0
*
* FLOW TO APH
701440   61  0.0  0.0
*
* EXTRACTION TO A BFPT
701430   60  0.0  124889.  0.0  117  0.0  0.0  0.0
701431   0  0
*
* EXTRACTION TO B BFPT
701420   60  0.0  129531.  0.0  117  0.0  0.0  0.0
701421   0  0
*
* IP SHAFT LEAKAGE TO SPE
701290   61  0.0  1262.
*
* FLASH TANK
700650   61  0.0  5364.
*
* INJECTION WATER TO BFP
700440   61  0.0  49030.
*
* LEAK OFF BFP
700360   61  0.0  0.0
*
* TRIPLE SPLITTER STM TO LP TURB STG 19TH
703050   63  0.0  0.3333
703051   1  0.0  0.3333
703055   0.0
*
* DRAIN BYPASS TO CONDENSER FOR HEATER #8B
701650   63  0.0  0.0
*
```

IP7018878

```
*
* TUBE SIDE BYPASS OF HIGH PRESS FW HTRS
701590   63  0.0  0.0
*
* HP FW HTR TRAINS
701580   63  0.0  0.5
*
* BFP RECIRC TO DA
701550   63  0.0  0.0
*
* SPLITTER FOR BFPS
701530   63  0.0  0.49
*
* FW TO LP HTR 1A,B, & C
701510   63  0.0  0.3333
701511   1  0.0  0.3333
701515   0.0
*
* BBFP RECIRC TO DA
701500   63  0.0  0.0
*
* BBFP FW SPLITTER
701480   63  0.0  0.5
*
* BYPASS TO CONDENSATE STRM FOR FG REHTR
701470   63  0.0  0.0
*
* BYPASS TO CONDENSER FOR AIR PREHEATER
701460   63  0.0  0.0
*
* SHELL SIDE DRN BYPASS TO COND FOR HTR #2
701390   63  0.0  0.0
*
* SHELL SIDE DRN BYPASS TO COND FOR HTR #3
701380   63  0.0  0.0
*
* SHELL SIDE DRN BYPASS TO COND FOR HTR #4
701370   63  0.0  0.0
*
* TUBE SIDE BYPASS FOR HEATER #4
701360   63  0.0  0.0
*
* TUBE SIDE BYPASS FOR HEATER #3
701350   63  0.0  0.0
*
* TUBE SIDE BYPASS FOR HEATER #2
701340   63  0.0  0.0
*
* TUBE SIDE BYPASS DRAIN COOLER & HTR #1
701330   63  0.0  0.0
*
* FIXED PERCENT SPLITTER
701310   63  0.0  0.5
*
```

IP7018879

```
*
* HP TURBINE SHAFT PACKING LEAKAGE 5
701230   64  1456.26  8304.  0.0  0  0  0
*
* HP TURBINE SHAFT PACKING LEAKAGE 4 & 5
701220   64  29.7363  2504.  0.0  0  0  0
*
* N1 LEAKAGES
701210   64  904.132  23408.  0.0  0  0  0
*
* IP COOLING STEAM
701200   64  270.409  17115.  0.0  0  0  0
*
* STEAM SEAL REGULATOR
701410   67  86  0.0  5.  9910.
*
* THROTTLE VALVE STEM LEAKAGE SPLITTER
701190   68  2240.  99.4912  0.0  0  0  0
*
* THROTTLE VALVE STEAM LEAKAGE 1 AND 2
701180   68  29910.  344.509  0.0  0  0  0
*
******************************
*  SPECIAL FEATURES
******************************
*
*
*
*
800100 "EXHAUST LOSS VS. ANNULUS VELOCITY"
* REGRESSION ANALYSIS
800101   0  1
* X VALUES
810100   235.  275.  300.  320.  355.  381.  408.  440.
810101   482.  505.  535.  570.  600.  630.  660.  700.
810102   755.  878.  955.  1210.
* Z AND Y VALUES
810110   0.0  47.5  38.  33.  30.  25.  22.  19.  16.
810111   13.  11.8  10.6  10.  9.8  10.  10.6  11.8
810112   14.  20.  24.  38.
* MULTIPLIERS
820100    0.0  0.0  0.0  0.0  0.0  0.0  0  0  0
* SCALE FLAGS
820101    0  0  0
*
*
800200 "APH DUTY VS THROTTLE FLOW PER HBDs"
* REGRESSION ANALYSIS
800201   0  1
* X VALUES
810200   1520200.  2808200.  4202500.  5851100.  6122700.
* Z AND Y VALUES
810210   0.0  -71639900.  -68984500.  -92573100.  -1.14262000E+008
```

IP7018880

```
  +   950000.  1000000.
* Z AND Y VALUES
810410   0.9  3846.7  4020.97  4228.6  4470.25  4746.62  5058.36
  +   5406.15  5790.68
810411   6212.61  6672.62  7171.39  7709.6  8287.9  8907.  9567.55
  +   10270.23
810420   0.97  3791.87  3941.46  4119.5  4326.55  4563.14  4829.81
  +   5127.09  5455.54
810421   5815.68  6208.07  6633.23  7091.7  7584.04  8110.76  8672.43
  +   9269.57
810430   0.98  3784.99  3931.49  4105.83  4308.55  4540.16  4801.2
  +   5092.18  5413.63
810431   5766.07  6150.02  6566.01  7014.55  7496.18  8011.42
  +   8560.78  9144.79
810440   0.99  3778.32  3921.82  4092.58  4291.1  4517.9  4773.48
  +   5058.36  5373.03
810441   5718.  6093.79  6500.9  6939.83  7411.1  7915.21  8452.67
  +   9023.99
810450   1.  3771.85  3912.45  4079.73  4274.19  4496.32  4746.62
  +   5025.57  5333.68
810451   5671.42  6039.31  6437.81  6867.44  7328.68  7822.03
  +   8347.97  8907.
* MULTIPLIERS
820400    0.0  0.001  0.0  0.0  0.0  0.0  0  0  0
* SCALE FLAGS
820401    0  0  0
*
*
800500 "APH EXTRACTION FLOW"
* REGRESSION ANALYSIS
800501   0  1
* X VALUES
810500   1520200.  2808200.  4202500.  5851100.  6122700.
* Z AND Y VALUES
810510   0.0  726570.  392850.  489290.  572740.  586090.
810508  DELETE
* MULTIPLIERS
820500    0.0  0.0  0.0  0.0  0.0  0.0  0  0  0
* SCALE FLAGS
820501    0  0  0
*
*
800600 "COND PMP A HD VS FLOW"
* REGRESSION ANALYSIS
800601   0  1
* X VALUES
810600   2.  2.5  3.  3.5  4.  4.  5.  6.
810601   7.  8.  9.  10.  11.  12.
* Z AND Y VALUES
810610   0.0  1225.  1205.  1185.  1160.  1125.  1225.  1205.
  +   1185.
810611   1160.  1125.  1095.  1055.  1005.  960.
810608  DELETE
* MULTIPLIERS
```

IP7018881

```
810711   1160.  1125.  1095.  1055.  1005.  960.
810708  DELETE
* MULTIPLIERS
820700    0.0  1000.  0.0  0.0  0.0  0.0  0  0  0
* SCALE FLAGS
820701    0  0  0
*
*
800800 "COND PMP A EFF VS FLOW"
* REGRESSION ANALYSIS
800801   0  1
* X VALUES
810800   2.  2.5  3.  3.5  4.  4.  5.  6.
810801   7.  8.  9.  10.  11.  12.
* Z AND Y VALUES
810810   0.0  0.54  0.63  0.71  0.77  0.815  0.54  0.63  0.71
810811   0.77  0.815  0.84  0.86  0.87  0.865
810808  DELETE
* MULTIPLIERS
820800    0.0  1000.  0.0  0.0  0.0  0.0  0  0  0
* SCALE FLAGS
820801    0  0  0
*
*
800900 "COND PMP B EFF VS FLOW"
* REGRESSION ANALYSIS
800901   0  1
* X VALUES
810900   2.  2.5  3.  3.5  4.  4.  5.  6.
810901   7.  8.  9.  10.  11.  12.
* Z AND Y VALUES
810910   0.0  0.54  0.63  0.71  0.77  0.815  0.54  0.63  0.71
810911   0.77  0.815  0.84  0.86  0.87  0.865
810908  DELETE
* MULTIPLIERS
820900    0.0  1000.  0.0  0.0  0.0  0.0  0  0  0
* SCALE FLAGS
820901    0  0  0
*
*
801000 "BBFP A HD VS FLOW"
* REGRESSION ANALYSIS
801001   0  1
* X VALUES
811000   2.5  3.  3.5  4.  4.5  5.  5.  6.
811001   7.  8.  9.  10.  11.  12.  13.  14.
811002   15.  16.  17.
* Z AND Y VALUES
811010   0.0  380.  375.  370.  365.  355.  350.  380.  375.
811011   370.  365.  355.  350.  340.  325.  312.  298.
811012   280.  260.  240.
811008  DELETE
* MULTIPLIERS
821000    0.0  1000.  0.0  0.0  0.0  0.0  0  0  0
```

IP7018882

```
811112   280.  260.  240.
811108  DELETE
* MULTIPLIERS
821100    0.0  1000.  0.0  0.0  0.0  0.0  0  0  0
* SCALE FLAGS
821101    0  0  0
*
*
801200 "BBFP A EFF VS FLOW"
* REGRESSION ANALYSIS
801201   0  1
* X VALUES
811200   2.5  3.  3.5  4.  4.5  5.  5.  6.
811201   7.  8.  9.  10.  11.  12.  13.  14.
811202   15.  17.
* Z AND Y VALUES
811210   0.0  0.58  0.66  0.72  0.77  0.81  0.84  0.58  0.66
811211   0.72  0.77  0.81  0.84  0.86  0.87  0.87  0.86
811212   0.84  0.76
811208  DELETE
* MULTIPLIERS
821200    0.0  1000.  0.0  0.0  0.0  0.0  0  0  0
* SCALE FLAGS
821201    0  0  0
*
*
801300 "BBFP B EFF VS FLOW"
* REGRESSION ANALYSIS
801301   0  1
* X VALUES
811300   2.5  3.  3.5  4.  4.5  5.  5.  6.
811301   7.  8.  9.  10.  11.  12.  13.  14.
811302   15.  17.
* Z AND Y VALUES
811310   0.0  0.58  0.66  0.72  0.77  0.81  0.84  0.58  0.66
811311   0.72  0.77  0.81  0.84  0.86  0.87  0.87  0.86
811312   0.84  0.76
811308  DELETE
* MULTIPLIERS
821300    0.0  1000.  0.0  0.0  0.0  0.0  0  0  0
* SCALE FLAGS
821301    0  0  0
*
*
801400 "SSR flow over load"
* REGRESSION ANALYSIS
801401   0  1
* X VALUES
811400   2171653.  3332314.  4984049.  6725628.  6750000.  6900000.
* Z AND Y VALUES
811410   0.0  0.0  0.0  4309.  9414.  9483.  9910.
* MULTIPLIERS
821400    0.0  0.0  0.0  0.0  0.0  0.0  0  0  0
* SCALE FLAGS
```

IP70188883

```
*
* TURBINE C EXHAUST LOSS
830100   1  EXUSLS  12  VEANP  12
830102   0
830101    0  0  0  0  0  0  0  0  0  0  0  0  0  0  0  0  0  0  0  0  0  0  0
   +  0  0  0  0  0  0  0  0  0  0  0  0  0
*
* TURBINE B EXHAUST LOSS
830200   1  EXUSLS  13  VEANP  13
830202   0
830201    0  0  0  0  0  0  0  0  0  0  0  0  0  0  0  0  0  0  0  0  0  0  0
   +  0  0  0  0  0  0  0  0  0  0  0  0  0
*
* TURBINE A EXHAUST LOSS
830300   1  EXUSLS  14  VEANP  14
830302   0
830301    0  0  0  0  0  0  0  0  0  0  0  0  0  0  0  0  0  0  0  0  0  0  0
   +  0  0  0  0  0  0  0  0  0  0  0  0  0
*
* APH DUTY PER HBD'S
830400   2  BBHXGR  32  WW  117
830402   0
830401    0  0  0  0  0  0  0  0  0  0  0  0  0  0  0  0  0  0  0  0  0  0  0
   +  0  0  0  0  0  0  0  0  0  0  0  0  0
830408  DELETE
*
* GENERATOR VARIABLE LOSSES
830600   4  OPVB  195  BKGROS  0  POWFAC  1
830602   0
830601    0  0  0  0  0  0  0  0  0  0  0  0  0  0  0  0  0  0  0  0  0  0  0
   +  0  0  0  0  0  0  0  0  0  0  0  0  0
*
* APH EXTRACTION FLOW
830700   5  WWFIXB  144  WW  117
830702   0
830701    0  0  0  0  0  0  0  0  0  0  0  0  0  0  0  0  0  0  0  0  0  0  0
   +  0  0  0  0  0  0  0  0  0  0  0  0  0
830708  DELETE
*
* COND PMP A HD VS FLOW
830800   6  PHEAD  42  OPVB  152
830802   0
830801    0  0  0  0  0  0  0  0  0  0  0  0  0  0  0  0  0  0  0  0  0  0  0
   +  0  0  0  0  0  0  0  0  0  0  0  0  0
830808  DELETE
*
* COND PMP B HD VS FLOW
830900   7  PHEAD  43  OPVB  152
830902   0
830901    0  0  0  0  0  0  0  0  0  0  0  0  0  0  0  0  0  0  0  0  0  0  0
   +  0  0  0  0  0  0  0  0  0  0  0  0  0
830908  DELETE
*
* COND PMP A EFF VS FLOW
```

IP7018884

```
831200   10  PHEAD  34  OPVB  157
831202   0
831201    0  0  0  0  0  0  0  0  0  0  0  0  0  0  0  0  0  0  0  0  0  0
   +  0  0  0  0  0  0  0  0  0  0  0  0  0
831208  DELETE
*
* BBFP B HD VS FLOW
831300   11  PHEAD  35  OPVB  157
831302   0
831301    0  0  0  0  0  0  0  0  0  0  0  0  0  0  0  0  0  0  0  0  0  0
   +  0  0  0  0  0  0  0  0  0  0  0  0  0
831308  DELETE
*
* BBFP A EFF VS FLOW
831400   12  EFFPMP  34  OPVB  157
831402   0
831401    0  0  0  0  0  0  0  0  0  0  0  0  0  0  0  0  0  0  0  0  0  0
   +  0  0  0  0  0  0  0  0  0  0  0  0  0
831408  DELETE
*
* BBFP B EFF VS FLOW
831500   13  EFFPMP  35  OPVB  157
831502   0
831501    0  0  0  0  0  0  0  0  0  0  0  0  0  0  0  0  0  0  0  0  0  0
   +  0  0  0  0  0  0  0  0  0  0  0  0  0
831508  DELETE
*
* SSR flow vs Throttle flow
831600   14  WWFIXB  141  WWVSC  59
831602   0
831601    0  0  0  0  0  0  0  0  0  0  0  0  0  0  0  0  0  0  0  0  0  0
   +  0  0  0  0  0  0  0  0  0  0  0  0  0
*
* Injection water to BFP flow vs Throttle flow
831700   15  WWFIXB  44  WWVSC  59
831702   0
831701    0  0  0  0  0  0  0  0  0  0  0  0  0  0  0  0  0  0  0  0  0  0
   +  0  0  0  0  0  0  0  0  0  0  0  0  0
*
*
*
* paclek for inlet hp turb COMPONENT 119
840200 PACLEK  119  2240.  1.00000000E-005  0.0 WW  -157
840205    0  0
840206    0  0.0
840208  DELETE
840209    0.0  0.0
*
* paclek for inlet hp turb COMPONENT 122
840300 PACLEK  122  2504.  1.00000000E-005  0.0 WW  -156
840305    0  0
840306    0  0.0
840308  DELETE
840309    0.0  0.0
```

IP7018885

```
*
* paclek for N1 LEAKAGES COMPONENT 123
840600 PACLEK  123  8304.  1.00000000E-005  0.0 WW  -183
840605    0  0
840606    0  0.0
840608  DELETE
840609    0.0  0.0
*
* paclek for N2 LEAKAGES COMPONENT 124
840700 PACLEK  124  9442.  0.0001  0.0 WW  -184
840705    0  0
840706    0  0.0
840708  DELETE
840709    0.0  0.0
*
* paclek for N2 LEAKAGES COMPONENT 125
840800 PACLEK  125  3979.  1.00000000E-005  0.0 WW  -186
840805    0  0
840806    0  0.0
840808  DELETE
840809    0.0  0.0
*
* hp section outlet enthalpy
840900 EFMULT  1  1306.6  1.00000000E-005  0.0 HH  -4
840905    0  0
840906    0  0.0
840908  DELETE
840909    0.0  0.0
*
* CONTROL PITCH
841000 PD  1  1423.9  1.00000000E-005  0.0 HH  -1
841005    0  0
841006    0  0.0
841008  DELETE
841009    0.0  0.0
*
* HP shaper for 2nd stage
841100 SHAPER  2  1423.9  1.00000000E-005  0.0 HH  -2
841105    0  0
841106    0  0.0
841108  DELETE
841109    0.0  0.0
*
* HP shaper for 3-5th stage component 3
841200 SHAPER  3  1366.9  1.00000000E-005  0.0 HH  -3
841205    0  0
841206    0  0.0
841208  DELETE
841209    0.0  0.0
*
* HP shaper for 6-8 stage
841300 SHAPER  4  1307.3  0.0001  0.0 HH  -4
841305    0  0
841306    0  0.0
```

IP7018886

```
841508  DELETE
841509    1410.  1430.
*
* IP shaper for 12-14th stage COMPONENT 7
841600 SHAPER  7  1340.2  1.00000000E-005  0.0 HH  -777
841605    0  0
841606    0  0.0
841608  DELETE
841609    0.0  0.0
*
* LP shaper for 15th stage COMPONENT 8
841700 SHAPER  8  1287.4  1.00000000E-005  0.0 HH  -8
841705    0  0
841706    0  0.0
841708  DELETE
841709    0.0  0.0
*
* LP shaper for 16th stage COMPONENT 9
841800 SHAPER  9  1241.7  1.00000000E-005  0.0 HH  -9
841805    0  0
841806    0  0.0
841808  DELETE
841809    0.0  0.0
*
* LP shaper for 17-18th stage COMPONENT 10
841900 SHAPER  10  1158.  1.00000000E-005  0.0 HH  -10
841905    0  0
841906    0  0.0
841908  DELETE
841909    0.0  0.0
*
* paclek for N1 LEAKAGES COMPONENT 128
842000 PACLEK  128  1256.  1.00000000E-005  0.0 WW  -47
842005    0  0
842006    0  0.0
842008  DELETE
842009    0.0  0.0
*
* paclek for N5 LEAKAGES COMPONENT 127
842100 PACLEK  127  6267.  0.0001  0.0 WW  -148
842105    0  0
842106    0  0.0
842108  DELETE
842109    0.0  0.0
*
* paclek for LEAKAGES 8&9  COMPONENT 129
842200 PACLEK  129  1262.  0.0001  0.0 WW  -181
842205    0  0
842206    0  0.0
842208  DELETE
842209    0.0  0.0
*
* shaper for 19th A stage
842300 SHAPER  11  1004.  1.00000000E-005  0.0 HH  -11
```

IP7018887

```
842505    0  0
842506    0  0.0
842508  DELETE
842509    0.0  0.0
*
*
*
* zero for flash tank calcs
870080   0.0
870088
*
* MW TO KW FACTOR
870100   1000.
870108
*
* SPE PLUS CONDENSER
870140   7717.
870148
*
* BOILER BLOWDOWN BENCHMARK
870200   6281.
870208
*
* BOILER DRUM QUALITY
870990   0.0
870998
*
* LBM/HR TO GPM CONST
871500   0.12468
871508
*
*
*
*
*
* SET INLET TO FLASH TANK
880010    PP  81   EQL   PPSTRU  146
880011    0.0  0.0  0.0
880015    0  0  0.0
*
* CALC Hi OF FLASH TANK
880020    PP  -146   PTH   TT  -146   OPVB  1
880021    0.0  0.0  0.0
880025    0  0  0.0
*
* CALC HLIQ AT FL
880030    PP  81   SHF   OPVB  2
880031    0.0  0.0  0.0
880035    0  0  0.0
*
* CALC HGAS AT FL
880040    PP  81   SHG   OPVB  3
880041    0.0  0.0  0.0
880045    0  0  0.0
```

IP7018888

```
880075    0  0  0.0
*
* CALC FLASH TANK STEAM FLOW
880080    WW  146   MUL   OPVB  6   WWFIXB  65
880081    0.0  0.0  0.0
880085    0  0  0.0
*
* SET FLASH TANK STEAM ENTHALPY
880090    OPVB  3   EQL   HHFIXB  65
880091    0.0  0.0  0.0
880095    0  0  0.0
*
* Check flash tank for negative steam flow
880100    WWFIXB  65   BIF   OPVB  8   OPVB  7
880101    0.0  0.0  0.0
880105    0  0  0.0
*
* Set flash tank steam flow to zero if negative
880110    WWFIXB  65   MUL   OPVB  7   WWFIXB  65
880111    0.0  0.0  0.0
880115    0  0  0.0
*
* SOLVING FOR SSR FLOW
880150    WW  85   SUB   OPVB  14   WWFIXB  141
880151    0.0  0.0  0.0
880155    0  0  0.0
880158  DELETE
*
* CYCLE LOSSES CALC
880230    WW  421   ADD   WW  416   OPVB  24
880231    0.0  0.0  0.0
880235    0  0  0.0
*
* MS FLOW - SH ATTEMP FLOW
881000    WW  59   SUB   WW  609   OPVB  100
881001    0.0  0.0  0.0
881005    0  0  0.0
*
* DELTA H MAIN STEAM
881010    HH  59   SUB   HH  114   OPVB  101
881011    0.0  0.0  0.0
881015    0  0  0.0
*
* M X DH MAIN STEAM
881020    OPVB  100   MUL   OPVB  101   OPVB  102
881021    0.0  0.0  0.0
881025    0  0  0.0
*
* DH REHEATER
881030    HH  15   SUB   HH  613   OPVB  103
881031    0.0  0.0  0.0
881035    0  0  0.0
*
* M X DH REHEATER
```

IP7018889

```
* DRUM ENTHALPY
881070    PP  114   PTH   OPVB  99   OPVB  107
881071    0.0  0.0  0.0
881075    0  0  0.0
*
* BLOWDOWN DH
881080    OPVB  107   SUB   HH  114   OPVB  108
881081    0.0  0.0  0.0
881085    0  0  0.0
*
* M X DH BLOWDOWN
881090    OPVB  20   MUL   OPVB  108   OPVB  109
881091    0.0  0.0  0.0
881095    0  0  0.0
*
* NTHR NUMERATOR
881100    OPVB  102   ADD   OPVB  104   OPVB  110
881101    0.0  0.0  0.0
881105    0  0  0.0
*
* NTHR NUMERATOR
881110    OPVB  106   ADD   OPVB  109   OPVB  111
881111    0.0  0.0  0.0
881115    0  0  0.0
*
* NTHR NUMERATOR
881120    OPVB  110   ADD   OPVB  111   OPVB  112
881121    0.0  0.0  0.0
881125    0  0  0.0
*
* NET KW
881130    BKNET  0   MUL   OPVB  10   OPVB  113
881131    0.0  0.0  0.0
881135    0  0  0.0
*
* NTHR FINAL CALC
881140    OPVB  112   DIV   OPVB  113   OPVB  114
881141    0.0  0.0  0.0
881145    0  0  0.0
*
* SP VOL X CONST
881500    VV  22   MUL   OPVB  150   OPVB  151
881501    0.0  0.0  0.0
881505    0  0  0.0
*
* LBM/HR TO GPM
881510    OPVB  151   MUL   WW  22   OPVB  152
881511    0.0  0.0  0.0
881515    0  0  0.0
*
* SP VOL BBFP TO GPM
881550    VV  207   MUL   OPVB  150   OPVB  156
881551    0.0  0.0  0.0
881555    0  0  0.0
```

IP7018890

```
881615    0  0  0.0
*
* USED ENERGY
881620    HH  59   SUB   HH  66   OPVB  167
881621    0.0  0.0  0.0
881625    0  0  0.0
*
* HP TURB EFFICIENCY
881630    OPVB  167   DIV   OPVB  166   OPVB  168
881631    0.0  0.0  100.
881635    0  0  0.0
*
* HP TURB PR RATIO
881700    PP  1   DIV   PP  4   OPVB  170
881701    0.0  0.0  0.0
881705    0  0  0.0
*
* IP TURB PR RATIO
881710    PP  67   DIV   PP  777   OPVB  171
881711    0.0  0.0  0.0
881715    0  0  0.0
*
* RH PRESS DROP
881720    PP  66   SUB   PP  -15   OPVB  172
881721    0.0  0.0  0.0
881725    0  0  0.0
*
* RH PRESS DROP
881730    OPVB  172   DIV   PP  66   OPVB  173
881731    0.0  0.0  100.
881735    0  0  0.0
*
* H HRH IP INLET
881800    HH  -67   MUL   WW  67   OPVB  180
881801    0.0  0.0  0.0
881805    0  0  0.0
*
* H CS IP INLET
881810    HH  180   MUL   WW  180   OPVB  181
881811    0.0  0.0  0.0
881815    0  0  0.0
*
* H NUMERATOR IP INLET
881820    OPVB  180   ADD   OPVB  181   OPVB  182
881821    0.0  0.0  0.0
881825    0  0  0.0
*
* FLOW IP MIX
881830    WW  67   ADD   WW  180   OPVB  183
881831    0.0  0.0  0.0
881835    0  0  0.0
*
* H MIX IP INLET
881840    OPVB  182   DIV   OPVB  183   OPVB  184
```

IP7018891

```
881870    OPVB  184   SUB   OPVB  186   OPVB  187
881871    0.0  0.0  0.0
881875    0  0  0.0
*
* UE IP TURBINE
881890    OPVB  184   SUB   HH  97   OPVB  189
881891    0.0  0.0  0.0
881895    0  0  0.0
*
* IP EFFICIENCY
881900    OPVB  189   DIV   OPVB  187   OPVB  190
881901    0.0  0.0  100.
881905    0  0  0.0
*
* H2 PRESSURE CORRECTION CALC
881930    PPGNHR  1   SUB   PPGNH2  1   OPVB  193
881931    0.0  0.0  0.0
881935    0  0  0.0
*
* H2 PRESS KW GAIN CALC
881940    OPVB  193   MUL   OPVB  192   OPVB  194
881941    0.0  0.0  0.0
881945    0  0  0.0
*
* ELECTRICAL LOSS INCLUDING H2 PRESS
881960    OPVB  195   SUB   OPVB  194   BKELEI  1
881961    0.0  0.0  0.0
881965    0  0  0.0
*
*
******************************
*   SPECIAL OPTIONS
******************************
*
*
*
850000    2
*
* OPTION 2
850002    12  13  14  0  0
*
* GENERATOR FLAGS AND DATA
011010   1  2  1  0  3600  991000.  0.9  63.  63.  973186.
                                     *** LINE ABOVE IS A REPLACEMENT LINE. ***
011011   4528.  9902.  259.5
                                     *** LINE ABOVE IS A REPLACEMENT LINE. ***
*
* OPTION 2 INTERVAL AND RELAXATION
850200   1  1.
*
850008
*
* INDIVIDUAL SPECIAL OPTION DELETION
850009
```

IP7018892

```
890031 OPVB  190 0.0   U
890033
890039 'F6.2'
*
890040 "THROTTLE FLOW"
890041 WW  59 0.0   U
890043
890049 'F15.0'
*
890050 "1ST STAGE PRESSURE inlet"
890051 PP  118 0.0   U
890053
890059 'F15.1'
*
890060 "new 8TH STAGE SHELL PRESSURE"
890061 PP  4 0.0   U
890063
890069 'F15.1'
*
890070 "IP INLET PRESSURE"
890071 PP  67 0.0   U
890073
890079 'F15.1'
*
890080 "14TH STAGE SHELL PRESSURE"
890081 PP  777 0.0   U
890083
890089 'F15.2'
*
890090 "HP TURB PR RATIO"
890091 OPVB  170 0.0   U
890093
890099 'F15.2'
*
890100 "IP TURB PR RATIO"
890101 OPVB  171 0.0   U
890103
890109 'F15.2'
*
891320 "REHEAT PRESSURE DROP"
891321 OPVB  173 0.0   U
891323   100. "NULL"   0.0  0  0
891329 'F15.4'
*
891350 "BOILER BLOWDOWN FLOW"
891351 OPVB  20 0.0   U
891353
891359 'F15.0'
*
891360 "CYCLE LOSSES"
891361 OPVB  24 0.0   U
891363
891369 'F15.0'
*
```

IP70188893

```
*
891400 "BOILER FEED FLOW"
891401 WW  114 0.0   U
891403
891409 'F15.0'
*
891410 "SH ATTEMP FLOW"
891411 WW  609 0.0   U
891413
891419 'F15.0'
*
891420 "RH ATTEMP FLOW"
891421 WW  610 0.0   U
891423
891429 'F15.0'
*
891500 "NET TURBINE CYCLE HEAT RATE"
891501 OPVB  114 0.0   U
891503
891509 'F15.2'
*
891980 "H2 PRESSURE"
891981 PPGNH2  1 0.0   U
891983
891989 'F15.2'
*
891990 "POWER FACTOR"
891991 POWFAC  1 0.0   U
891993
891999 'F15.2'
*
*
*
*
*****************************************************************
*    SPECIAL OPTION 6 (TEST DATA REDUCTION OPTION) BENCHMARK CASE
*****************************************************************
*
= U2 Design HB FROM ALSTOM
*SPECIAL OPTION 6 FLAG
850600   6
*
*POWER AND HEAT RATE VARIABLES
850601    1  -114
* OUTPUT TABLES NOT SUPPRESSED
850602  1
* TURBINE TRANSFORMATION
850603   0
* YEARLY COST FACTORS
856000    0.8117  0.89  1.51  0.0
* TURBINE STAGE PRESSURE OUTPUT DEFINITIONS
856001       1  "HP TURBINE STAGE GROUP 1-2"
856002       3  "HP TURBINE STAGE GROUP 3-5"
856003       4  "HP TURBINE STAGE GROUP 6-8"
```

IP7018894

```
* IP TURBINE SECTION EFFICIENCY OUTPUT DEFINITIONS
856201        7  "IP TURBINE STAGE GROUP 12-14"
* LP TURBINE SECTION EFFICIENCY OUTPUT DEFINITIONS
856301       14  "LP TURBINE A 20TH STAGE"
856302       13  "LP TURBINE B 20TH STAGE"
*
*
/
```

IP7018895

INPUT SCHEDULE NUMBER 1 TABLE OF VALUES

EXHAUST LOSS VS. ANNULUS VELOCITY

UNIVARIATE TABLE OF Y VERSUS X

VALUES OF X

2.350E+02	2.750E+02	3.000E+02	3.200E+02	3.550E+02	3.810E+02	4.080E+02
4.400E+02	4.820E+02	5.050E+02	5.350E+02	5.700E+02	6.000E+02	6.300E+02
6.600E+02	7.000E+02	7.550E+02	8.780E+02	9.550E+02	1.210E+03	

VALUES OF Y

4.750E+01	3.800E+01	3.300E+01	3.000E+01	2.500E+01	2.200E+01	1.900E+01
1.600E+01	1.300E+01	1.180E+01	1.060E+01	1.000E+01	9.800E+00	1.000E+01
1.060E+01	1.180E+01	1.400E+01	2.000E+01	2.400E+01	3.800E+01	

INPUT SCHEDULE NUMBER 4 TABLE OF VALUES

GENERATOR LOSS VS MW

BIVARIATE TABLE OF Y VERSUS X
WITH Z AS A PARAMETER

VALUES OF X

2.500E+05	3.000E+05	3.500E+05	4.000E+05	4.500E+05	5.000E+05	5.500E+05
6.000E+05	6.500E+05	7.000E+05	7.500E+05	8.000E+05	8.500E+05	9.000E+05
9.500E+05	1.000E+06					

VALUES OF Z	VALUES OF Y					
9.000E-01	3.847E+03	4.021E+03	4.229E+03	4.470E+03	4.747E+03	5.058E+03
	5.406E+03	5.791E+03	6.213E+03	6.673E+03	7.171E+03	7.710E+03
	8.288E+03	8.907E+03	9.568E+03	1.027E+04		
9.700E-01	3.792E+03	3.941E+03	4.120E+03	4.327E+03	4.563E+03	4.830E+03
	5.127E+03	5.456E+03	5.816E+03	6.208E+03	6.633E+03	7.092E+03
	7.584E+03	8.111E+03	8.672E+03	9.270E+03		
9.800E-01	3.785E+03	3.931E+03	4.106E+03	4.309E+03	4.540E+03	4.801E+03
	5.092E+03	5.414E+03	5.766E+03	6.150E+03	6.566E+03	7.015E+03
	7.496E+03	8.011E+03	8.561E+03	9.145E+03		
9.900E-01	3.778E+03	3.922E+03	4.093E+03	4.291E+03	4.518E+03	4.773E+03

IP7018896

(A) HAS ADDITION AFTER MULTIPLICATION
(B) HAS ADDITION BEFORE MULTIPLICATION

IP7018897

INPUT SCHEDULE NUMBER 14 TABLE OF VALUES

SSR flow over load

UNIVARIATE TABLE OF Y VERSUS X

VALUES OF X

2.172E+06	3.332E+06	4.984E+06	6.726E+06	6.750E+06	6.900E+06

VALUES OF Y

0.000E+00	0.000E+00	4.309E+03	9.414E+03	9.483E+03	9.910E+03

INPUT SCHEDULE NUMBER 15 TABLE OF VALUES

Injection water flow to BFP over load

UNIVARIATE TABLE OF Y VERSUS X

VALUES OF X

2.172E+06	3.332E+06	4.984E+06	6.726E+06	6.750E+06	6.900E+06

VALUES OF Y

2.672E+04	3.252E+04	4.039E+04	4.826E+04	4.841E+04	4.903E+04

IP7018898

VARIABLE REFERENCES TO SCHEDULE TABLES
(CALCULATIONS BEGIN AT ITRSCH = 2)

SCHEDULE VBLS. ID	TBL.# REFD.	Y VAR.	LOCATION USER ID	X VAR.	LOCATION USER ID	Z VAR.	LOCATION USER ID	INTRVL/ SPCL INIT
1	1	EXUSLS	12	VEANP	12			1/NO
2	1	EXUSLS	13	VEANP	13			1/NO
3	1	EXUSLS	14	VEANP	14			1/NO
6	4	OPVB	195	BKGROS	0	POWFAC	1	1/NO
16	14	WWFIXB	141	WWVSC	59			1/NO
17	15	WWFIXB	44	WWVSC	59			1/NO

* SPCL INIT (YES) - PRIOR TO FIRST ITERATE AT USER OPTION

IP7018899

DEFINITIONS OF SPECIAL OPERATIONS SPECIFIED
(CALCULATIONS BEGIN AT ITROPS = 2)

OPER-ATION ID	FIRST VARIABLE (ID)	OPERATION	SECOND VARIABLE (ID)	=	RESULT VARIABLE(ID)	INTERVAL/ SPCL INIT*
1	PP (81)	EQL		=	PPSTRU(146)	1/NO
2	PP (-146)	PTH	TT (-146)	=	OPVB (1)	1/NO
3	PP (81)	SHF		=	OPVB (2)	1/NO
4	PP (81)	SHG		=	OPVB (3)	1/NO
5	OPVB (1)	SUB	OPVB (2)	=	OPVB (4)	1/NO
6	OPVB (3)	SUB	OPVB (2)	=	OPVB (5)	1/NO
7	OPVB (4)	DIV	OPVB (5)	=	OPVB (6)	1/NO
8	WW (146)	MUL	OPVB (6)	=	WWFIXB(65)	1/NO
9	OPVB (3)	EQL		=	HHFIXB(65)	1/NO
10	WWFIXB(65)	BIF	OPVB (8)	=	OPVB (7)	1/NO
11	WWFIXB(65)	MUL	OPVB (7)	=	WWFIXB(65)	1/NO
23	WW (421)	ADD	WW (416)	=	OPVB (24)	1/NO
100	WW (59)	SUB	WW (609)	=	OPVB (100)	1/NO
101	HH (59)	SUB	HH (114)	=	OPVB (101)	1/NO
102	OPVB (100)	MUL	OPVB (101)	=	OPVB (102)	1/NO
103	HH (15)	SUB	HH (613)	=	OPVB (103)	1/NO
104	WW (613)	MUL	OPVB (103)	=	OPVB (104)	1/NO
105	HH (59)	SUB	HH (106)	=	OPVB (105)	1/NO
106	WW (609)	MUL	OPVB (105)	=	OPVB (106)	1/NO
107	PP (114)	PTH	OPVB (99)	=	OPVB (107)	1/NO
108	OPVB (107)	SUB	HH (114)	=	OPVB (108)	1/NO
109	OPVB (20)	MUL	OPVB (108)	=	OPVB (109)	1/NO
110	OPVB (102)	ADD	OPVB (104)	=	OPVB (110)	1/NO
111	OPVB (106)	ADD	OPVB (109)	=	OPVB (111)	1/NO
112	OPVB (110)	ADD	OPVB (111)	=	OPVB (112)	1/NO
113	BKNET (0)	MUL	OPVB (10)	=	OPVB (113)	1/NO
114	OPVB (112)	DIV	OPVB (113)	=	OPVB (114)	1/NO
150	VV (22)	MUL	OPVB (150)	=	OPVB (151)	1/NO
151	OPVB (151)	MUL	WW (22)	=	OPVB (152)	1/NO
155	VV (207)	MUL	OPVB (150)	=	OPVB (156)	1/NO
156	OPVB (156)	MUL	WW (207)	=	OPVB (157)	1/NO
160	PP (4)	PSH	SS (59)	=	OPVB (165)	1/NO
161	HH (59)	SUB	OPVB (165)	=	OPVB (166)	1/NO
162	HH (59)	SUB	HH (66)	=	OPVB (167)	1/NO
163	OPVB (167)	DIV	OPVB (166)	=	OPVB (168)	1/NO
170	PP (1)	DIV	PP (4)	=	OPVB (170)	1/NO
171	PP (67)	DIV	PP (777)	=	OPVB (171)	1/NO
172	PP (66)	SUB	PP (-15)	=	OPVB (172)	1/NO
173	OPVB (172)	DIV	PP (66)	=	OPVB (173)	1/NO
180	HH (-67)	MUL	WW (67)	=	OPVB (180)	1/NO
181	HH (180)	MUL	WW (180)	=	OPVB (181)	1/NO

IP7018900

******** The following input lines were not used.

880155
880151
880150
842509
842506
842505
842500
842409
842406
842405
842400
842309
842306
842305
842300
842209
842206
842205
842200
842109
842106
842105
842100
842009
842006
842005
842000
841909
841906
841905
841900
841809
841806
841805
841800
841709
841706
841705
841700
841609
841606
841605
841600
841509
841506
841505
841500
841409
841406
841405

IP7018901

841006
841005
841000
840909
840906
840905
840900
840809
840806
840805
840800
840709
840706
840705
840700
840609
840606
840605
840600
840509
840506
840505
840500
840409
840406
840405
840400
840309
840306
840305
840300
840209
840206
840205
840200
831502
831501
831500
831402
831401
831400
831302
831301
831300
831202
831201
831200
831102
831101
831100
831002
831001
831000

IP70188902

821200
821101
821100
821001
821000
820901
820900
820801
820800
820701
820700
820601
820600
820501
820500
820201
820200
811312
811311
811310
811302
811301
811300
811212
811211
811210
811202
811201
811200
811112
811111
811110
811102
811101
811100
811012
811011
811010
811002
811001
811000
810911
810910
810901
810900
810811
810810
810801
810800
810711
810710
810701
810700
810611

IP7018903

```
    allowed.  One demand supplier can respond to only
    one component or stream that demands a flow
    adjustment.

    The current demand references are made by:
    a COMPONENT Type =  60, with ID = 142
    a COMPONENT Type =  60, with ID = 143

    In order to continue calculations, the demand
    reference made by the second item above is being
    reset to zero.  This reset may not be desirable.

    You need to change at least one of the references
    that are made to this demand splitter.
*** END OF WARNING ***
```

IP7018904

SCHEDULED VARIABLE VALUES CALCULATED

SCHEDULE VARIABLES ID	Y VALUE USED FOR ITERATE 13	X VALUE FROM ITERATE 12	Z VALUE FROM ITERATE 12
1	EXUSLS(12) 3.88547E+01	VEANP (12) 1.22557E+03	
2	EXUSLS(13) 2.26609E+01	VEANP (13) 9.29223E+02	
3	EXUSLS(14) 1.26260E+01	VEANP (14) 7.20651E+02	
6	OPVB (195) 9.89340E+03	BKGROS(0) 9.73186E+02	POWFAC(1) 9.00000E-01
16	WWFIXB(141) 9.91000E+03	WWVSC (59) 6.90000E+06	
17	WWFIXB(44) 4.90300E+04	WWVSC (59) 6.90000E+06	

IP7018905

OPERATION SET VALUES CALCULATED
AT THE START OF ITERATION 13

OPER-ATION ID	VARIABLE (ID) VALUE	OPERATION	VARIABLE (ID) VALUE	=	VARIABLE (ID) VALUE
1	PP (81) 5.15307E+00	EQL		=	PPSTRU(146) 5.15307E+00
2	PP (-146) 1.00000E+01	PTH	TT (-146) 1.71298E+02	=	OPVB (1) 1.39299E+02
3	PP (81) 5.15307E+00	SHF		=	OPVB (2) 1.31441E+02
4	PP (81) 5.15307E+00	SHG		=	OPVB (3) 1.13124E+03
5	OPVB (1) 1.39299E+02	SUB	OPVB (2) 1.31441E+02	=	OPVB (4) 7.85770E+00
6	OPVB (3) 1.13124E+03	SUB	OPVB (2) 1.31441E+02	=	OPVB (5) 9.99801E+02
7	OPVB (4) 7.85770E+00	DIV	OPVB (5) 9.99801E+02	=	OPVB (6) 7.85927E-03
8	WW (146) 6.75977E+05	MUL	OPVB (6) 7.85927E-03	=	WWFIXB(65) 5.31268E+03
9	OPVB (3) 1.13124E+03	EQL		=	HHFIXB(65) 1.13124E+03
10	WWFIXB(65) 5.31268E+03	BIF	OPVB (8) 0.00000E+00	=	OPVB (7) 1.00000E+00
11	WWFIXB(65) 5.31268E+03	MUL	OPVB (7) 1.00000E+00	=	WWFIXB(65) 5.31268E+03
23	WW (421) 0.00000E+00	ADD	WW (416) 0.00000E+00	=	OPVB (24) 0.00000E+00

IP7018906

OPERATION SET VALUES CALCULATED
AT THE START OF ITERATION 13

OPER-ATION ID	VARIABLE (ID) VALUE	OPERATION	VARIABLE (ID) VALUE	=	VARIABLE (ID) VALUE
100	WW (59) 6.90000E+06	SUB	WW (609) 0.00000E+00	=	OPVB (100) 6.90000E+06
101	HH (59) 1.46121E+03	SUB	HH (114) 5.49134E+02	=	OPVB (101) 9.12073E+02
102	OPVB (100) 6.90000E+06	MUL	OPVB (101) 9.12073E+02	=	OPVB (102) 6.29330E+09
103	HH (15) 1.51843E+03	SUB	HH (613) 1.30715E+03	=	OPVB (103) 2.11278E+02
104	WW (613) 5.61577E+06	MUL	OPVB (103) 2.11278E+02	=	OPVB (104) 1.18649E+09
105	HH (59) 1.46121E+03	SUB	HH (106) 3.31975E+02	=	OPVB (105) 1.12923E+03
106	WW (609) 0.00000E+00	MUL	OPVB (105) 1.12923E+03	=	OPVB (106) 0.00000E+00
107	PP (114) 2.85465E+03	PTH	OPVB (99) 0.00000E+00	=	OPVB (107) 7.78292E+02
108	OPVB (107) 7.78292E+02	SUB	HH (114) 5.49134E+02	=	OPVB (108) 2.29158E+02
109	OPVB (20) 6.28100E+03	MUL	OPVB (108) 2.29158E+02	=	OPVB (109) 1.43934E+06
110	OPVB (102) 6.29330E+09	ADD	OPVB (104) 1.18649E+09	=	OPVB (110) 7.47979E+09
111	OPVB (106) 0.00000E+00	ADD	OPVB (109) 1.43934E+06	=	OPVB (111) 1.43934E+06

IP7018907

OPERATION SET VALUES CALCULATED
AT THE START OF ITERATION 13

OPER-ATION ID	VARIABLE (ID) VALUE	OPERATION	VARIABLE (ID) VALUE	=	VARIABLE (ID) VALUE
112	OPVB (110) 7.47979E+09	ADD	OPVB (111) 1.43934E+06	=	OPVB (112) 7.48123E+09
113	BKNET (0) 9.69712E+02	MUL	OPVB (10) 1.00000E+03	=	OPVB (113) 9.69712E+05
114	OPVB (112) 7.48123E+09	DIV	OPVB (113) 9.69712E+05	=	OPVB (114) 7.71490E+03
150	VV (22) 1.61845E-02	MUL	OPVB (150) 1.24680E-01	=	OPVB (151) 2.01789E-03
151	OPVB (151) 2.01789E-03	MUL	WW (22) 5.24655E+06	=	OPVB (152) 1.05869E+04
155	VV (207) 1.79958E-02	MUL	OPVB (150) 1.24680E-01	=	OPVB (156) 2.24371E-03
156	OPVB (156) 2.24371E-03	MUL	WW (207) 6.91997E+06	=	OPVB (157) 1.55264E+04
160	PP (4) 6.27833E+02	PSH	SS (59) 1.53267E+00	=	OPVB (165) 1.29482E+03
161	HH (59) 1.46121E+03	SUB	OPVB (165) 1.29482E+03	=	OPVB (166) 1.66387E+02
162	HH (59) 1.46121E+03	SUB	HH (66) 1.30715E+03	=	OPVB (167) 1.54051E+02
163	M * OPVB (167) 1.00E+00 * 1.54E+02 1.54051E+02	DIV	M * OPVB (166) 1.00E+00 * 1.66E+02 1.66387E+02	=	M * OPVB (168) 1.00E+02 * 9.26E-01 9.25863E+01

IP7018908

OPERATION SET VALUES CALCULATED
AT THE START OF ITERATION 13

OPER-ATION ID	VARIABLE (ID) VALUE	OPERATION	VARIABLE (ID) VALUE	=	VARIABLE (ID) VALUE
170	PP (1) 1.70663E+03	DIV	PP (4) 6.27833E+02	=	OPVB (170) 2.71829E+00
171	PP (67) 5.85768E+02	DIV	PP (777) 1.39576E+02	=	OPVB (171) 4.19676E+00
172	PP (66) 6.27833E+02	SUB	PP (-15) 5.85768E+02	=	OPVB (172) 4.20648E+01
173	M * OPVB (172) 1.00E+00 * 4.21E+01 4.20648E+01	DIV	M * PP (66) 1.00E+00 * 6.28E+02 6.27833E+02	=	M * OPVB (173) 1.00E+02 * 6.70E-02 6.70000E+00
180	HH (-67) 1.51841E+03	MUL	WW (67) 5.61828E+06	=	OPVB (180) 8.53083E+09
181	HH (180) 1.42312E+03	MUL	WW (180) 1.71151E+04	=	OPVB (181) 2.43569E+07
182	OPVB (180) 8.53083E+09	ADD	OPVB (181) 2.43569E+07	=	OPVB (182) 8.55519E+09
183	WW (67) 5.61828E+06	ADD	WW (180) 1.71151E+04	=	OPVB (183) 5.63539E+06
184	OPVB (182) 8.55519E+09	DIV	OPVB (183) 5.63539E+06	=	OPVB (184) 1.51812E+03
185	PP (-67) 5.85768E+02	PHS	OPVB (184) 1.51812E+03	=	OPVB (185) 1.71858E+00
186	PP (97) 1.39576E+02	PSH	OPVB (185) 1.71858E+00	=	OPVB (186) 1.32530E+03

IP7018909

OPERATION SET VALUES CALCULATED
AT THE START OF ITERATION 13

OPER-ATION ID	VARIABLE (ID) VALUE	OPERATION	VARIABLE (ID) VALUE	=	VARIABLE (ID) VALUE
187	OPVB (184) 1.51812E+03	SUB	OPVB (186) 1.32530E+03	=	OPVB (187) 1.92822E+02
189	OPVB (184) 1.51812E+03	SUB	HH (97) 1.33927E+03	=	OPVB (189) 1.78846E+02
190	M * OPVB (189) 1.00E+00 * 1.79E+02 1.78846E+02	DIV	M * OPVB (187) 1.00E+00 * 1.93E+02 1.92822E+02	=	M * OPVB (190) 1.00E+02 * 9.28E-01 9.27519E+01
193	PPGNHR(1) 6.30000E+01	SUB	PPGNH2(1) 6.30000E+01	=	OPVB (193) 0.00000E+00
194	OPVB (193) 0.00000E+00	MUL	OPVB (192) 0.00000E+00	=	OPVB (194) 0.00000E+00
196	OPVB (195) 9.89340E+03	SUB	OPVB (194) 0.00000E+00	=	BKELEI(1) 9.89340E+03

IP7018910

TABLE OF NON-ZERO OPERATIONAL VARIABLES
(PRESENTATION IS: ID, VALUE; ID, ...)

1, 1.39299E+02;	2, 1.31441E+02;	3, 1.13124E+03;	4, 7.85770E+00
5, 9.99801E+02;	6, 7.85927E-03;	7, 1.00000E+00;	10, 1.00000E+03
14, 7.71700E+03;	20, 6.28100E+03;	100, 6.90000E+06;	101, 9.12073E+02
102, 6.29330E+09;	103, 2.11278E+02;	104, 1.18649E+09;	105, 1.12923E+03
107, 7.78292E+02;	108, 2.29158E+02;	109, 1.43934E+06;	110, 7.47979E+09
111, 1.43934E+06;	112, 7.48123E+09;	113, 9.69712E+05;	114, 7.71490E+03
150, 1.24680E-01;	151, 2.01789E-03;	152, 1.05869E+04;	156, 2.24371E-03
157, 1.55264E+04;	165, 1.29482E+03;	166, 1.66387E+02;	167, 1.54051E+02
168, 9.25863E+01;	170, 2.71829E+00;	171, 4.19676E+00;	172, 4.20648E+01
173, 6.70000E+00;	180, 8.53083E+09;	181, 2.43569E+07;	182, 8.55519E+09
183, 5.63539E+06;	184, 1.51812E+03;	185, 1.71858E+00;	186, 1.32530E+03
187, 1.92822E+02;	189, 1.78846E+02;	190, 9.27519E+01;	195, 9.89340E+03

IP7018911

SUMMARY OF ACTIVE SPECIAL OPTIONS

```
*** SPECIAL OPTION  2 IS ACTIVE
    IT SWINGS CONDENSING TURBINE EXPANSION LINE TO MATCH GENERATION

       PRODUCING KEY RESULTS:

          STATUS                =  CONVERGED
          GEN 1 GROSS POWER     =  9.73186E+02 MW

          SEE THE TABLES BELOW,
          TITLED - DETAILED
          TURBINE PERFORMANCE
          TABLES A, B, AND C

       BASED ON KEY INPUTS:

          GEN 1 TARGET POWER    =  9.73186E+05 KW
          FIRST SWING COMP ID   =   1,  13,  14


*** SPECIAL OPTION  6 IS ACTIVE
    IT ANALYZES TEST DATA, AUTOMATICALLY STANDARDIZES
    SYSTEM PERFORMANCE, AND CALCULATES THE PERFORMANCE
    IMPACT OF COMPONENT UPGRADES

       PRODUCING KEY RESULTS:

          SEE OPTION 6 SPECIFIC TABLES THROUGHOUT THE
          SEVERAL CASES
          SPECIFIC RESULTS OF INTEREST, WITH TITLES:
            PERFORMANCE TEST ANALYSIS RESULTS - ALL CASES
               AT AND AFTER STANDARDIZATION
            COMPARISON OF STANDARDIZED RESULTS
               AT STANDARDIZATION STEP
            GENERATION, HEAT RATE, AND COST - FINAL CASE

       BASED ON KEY INPUTS:

          PRIMARILY TEST DATA - TEMPERATURES, PRESSURES,
          AND FLOWS ENTERED IN THE TEST REDUCTION STEP
```

IP7018912

FLAG SETTINGS AND DATA FOR SYSTEM

```
NTGCYC =   2, FOSSIL TURBINE GENERATOR CYCLE CALCULATION

NTIMES =  13, NUMBER OF SYSTEM ITERATIONS
              (ITRMAX = 100, ITRMIN =   5)

NCMP   = 161, NUMBER OF COMPONENTS USED IN THIS CASE
              (MXCMP = 500, MAXIMUM NUMBER ALLOWED)

NSTR   = 244, NUMBER OF STREAMS USED IN THIS CASE
              (MXSTR = 600, MAXIMUM NUMBER ALLOWED)

NRHEAT =   1, REHEAT TURBINE PLANT DESIGN

CONVERGENCE DATA:

       EXTERR =  1.00000E+01 LBM/HR, EXTRACTION FLOW CONVERGENCE
       CIRERR =  1.00000E+00 LBM/HR, TOTAL SYSTEM MASS FLOW CONVERGENCE
       TERROR =  5.00000E-06 - ,     COMPONENT CONVERGENCE
       PERROR =  1.00000E-03 - ,     STREAM CONVERGENCE
       GENERR =  5.00000E+01 KW,     GENERATOR CONVERGENCE
       ENEROR =  1.00000E+04 BTU/HR, ENERGY CONVERGENCE

REFERENCE DATA:

       TTDEAD =    50.00 DEG F, DEAD STATE TEMPERATURE
       PPDEAD =    14.70 PSIA,  DEAD STATE PRESSURE
       ZZDEAD =     0.00 FT,    DEAD STATE ELEVATION
       TTAIR  =    50.00 DEG F, AMBIENT TEMPERATURE

STEAM TURBINE DATA:

       NTURB  = 1,        GENERAL ELECTRIC TURBINES
       NGEPRO = 3,        TURBINES SOLVED, G.E. FOSSIL PROCEDURE GER-2007C
       TFREQ  = 1.000004, EQUIVALENT THROTTLE FLOW RATIO
       TFR1ST = 1.000000, FIRST ADMISSION THROTTLE FLOW RATIO

GENERATOR NO. 1 DATA

       NGNTYP =  2,           CONDUCTOR COOLED GENERATOR
       NGENER =  1,           GENERAL ELECTRIC GENERATOR
       NGNCOL =  0,           LOSSES ARE NOT RECOVERABLE THROUGH COOLERS
       ISPEED =  3600 RPM,    GENERATOR SPEED
       BKGRAT =  991000  KVA, RATED GENERATOR CAPACITY
       POWFAC =  0.900        GENERATOR POWER FACTOR
```

IP7018913

FLAG SETTINGS AND DATA FOR SYSTEM
(CONTINUED)

```
SPECIAL OPTION NUMBER  2 HAS BEEN FLAGGED IN THE INPUT
          (CALCULATIONS BEGIN AT ITRSPC =   5).
SPECIAL OPTION NUMBER  6 HAS BEEN FLAGGED IN THE INPUT
          (CALCULATIONS BEGIN AT ITRSPC =   5).
```

IP7018914

GEOMETRY CONFIGURATION OF MODEL

COMP NO.	COMP TYPE	COMPONENT DESCRIPTION	CONNECTING STREAM NOS. AND STREAM TYPE (NO. - TYPE) 1 IN	1 OUT	2 IN	2 OUT	3 IN	3 OUT
1	4	FOSS. TURB. - GS	118-0	1-0				
3	5	FOSS. TURB. - HP	120-0	3-0		684-0		
4	5	FOSS. TURB. - HP	3-0	4-0				
5	6	FOSS. TURB. - IP	67-2	5-0				
6	6	FOSS. TURB. - IP	68-0	7-0		411-0		
7	6	FOSS. TURB. - IP	7-0	777-0		28-0		
8	7	FOSS. TURB. - LP	127-2	8-0		404-2		
9	7	FOSS. TURB. - LP	8-0	9-0		405-2		
10	7	FOSS. TURB. - LP	9-0	10-0		406-2		
11	7	FOSS. TURB. - LP	307-0	11-0		12-0		
12	7	FOSS. TURB. - LP	79-0	16-0				
13	7	FOSS. TURB. - LP	77-0	13-0				
14	7	FOSS. TURB. - LP	11-0	14-0				
15	25	FOSSIL REHEATER	613-0	15-0				
16	10	STD. CONDENSER	16-0	18-0	108-0	23-0	781-0	
17	10	STD. CONDENSER	13-0	20-0	129-0	17-0		
18	10	STD. CONDENSER	14-0	22-0	23-0	62-0	132-0	
19	14	STD. FW. HEATER	154-0	19-0	80-2	21-0		
20	16	FWHT. BACK-DRAIN	138-0	24-0	406-2	50-5	149-0	
21	16	FWHT. BACK-DRAIN	139-0	25-0	405-2	51-0	219-0	
22	16	FWHT. BACK-DRAIN	140-0	26-2	404-2	52-0		
23	15	CONTACT HEATER	75-0	27-0	142-2		100-0	
24	18	FW. W/DESUP+COOL	158-0	34-1	166-2	37-0	161-0	
25	18	FW. W/DESUP+COOL	172-0	38-1	224-2	45-0	179-0	
26	18	FW. W/DESUP+COOL	34-1	32-1	167-2	36-0	162-0	
27	18	FW. W/DESUP+COOL	38-1	41-1	170-2	40-0	178-0	
28	18	FW. W/DESUP+COOL	32-1	33-0	168-2	35-0		
29	18	FW. W/DESUP+COOL	41-1	46-0	169-2	39-0		
30	20	GEN. HT. EXCH.	104-0	30-2	210-0	57-0		
31	23	EXT. DRAIN COOL.	133-0	31-0	303-0	49-0		
32	27	SPEC. HT. EXCH.	192-0	55-0				
33	27	SPEC. HT. EXCH.	194-0	56-0				
34	41	STD. ELE. PUMP	200-0	42-0				
35	41	STD. ELE. PUMP	196-0	43-0				
36	61	FIXED FLOW SPLIT	199-0	201-0		44-0		
37	40	STM. DRIVEN PUMP	202-0	420-0	152-2	63-0		
38	40	STM. DRIVEN PUMP	203-0	76-0	151-2	64-0		
39	35	THROTTLE VALVE	117-0	54-0				
40	54	TRIPLE MIXER	48-0	210-0	47-0		181-0	
42	41	STD. ELE. PUMP	135-0	58-0				
43	41	STD. ELE. PUMP	212-0	60-0				

IP7018915

GEOMETRY CONFIGURATION OF MODEL

COMP NO.	COMP TYPE	COMPONENT DESCRIPTION	CONNECTING STREAM NOS. AND STREAM TYPE (NO. - TYPE) 1 IN	1 OUT	2 IN	2 OUT	3 IN	3 OUT
47	7	FOSS. TURB. - LP	306-0	79-0		81-2		
59	33	INPUT COMPONENT		59-0				
60	31	INFINITE SOURCE		107-0				
61	63	FIXED P.C. SPLIT	107-0	108-0		129-0		
62	50	STANDARD MIXER	62-0	105-0	17-0			
63	30	INFINITE SINK	105-0					
64	32	OUTPUT COMPONENT	114-1					
65	61	FIXED FLOW SPLIT	146-5	69-0		70-0		
66	50	STANDARD MIXER	137-0	66-0	131-0			
67	50	STANDARD MIXER	15-0	67-2	156-0			
68	50	STANDARD MIXER	5-0	68-0	180-0			
69	50	STANDARD MIXER	60-0	213-0	58-0			
71	50	STANDARD MIXER	334-2	71-0	134-0			
72	50	STANDARD MIXER	24-0	72-0	144-0			
73	50	STANDARD MIXER	72-0	73-0	197-0			
74	50	STANDARD MIXER	25-0	74-0	147-0			
75	50	STANDARD MIXER	26-2	75-0	150-0			
80	51	FWHT-COND. MIXER	57-0	83-0	63-0			
81	51	FWHT-COND. MIXER	208-0	84-0	95-0			
82	51	FWHT-COND. MIXER	119-0	82-0	157-0			
83	51	FWHT-COND. MIXER	82-0	86-0	183-0			
84	51	FWHT-COND. MIXER	86-0	102-0	186-0			
85	51	FWHT-COND. MIXER	102-0	85-0	128-0			
87	51	FWHT-COND. MIXER	64-0	87-0	220-0			
88	51	FWHT-COND. MIXER	87-0	88-0	218-0			
89	51	FWHT-COND. MIXER	88-0	89-0	145-0			
90	51	FWHT-COND. MIXER	89-0	90-0	413-0			
93	51	FWHT-COND. MIXER	163-0	93-0	176-0			
94	54	TRIPLE MIXER	93-0	94-0	175-0		164-0	
95	54	TRIPLE MIXER	94-0	95-0	174-0		165-0	
96	51	FWHT-COND. MIXER	136-0	96-0	130-0			
97	51	FWHT-COND. MIXER	28-0	97-0	96-0			
98	51	FWHT-COND. MIXER	97-0	98-0	222-0			
99	51	FWHT-COND. MIXER	191-0	99-0	223-0			
100	51	FWHT-COND. MIXER	109-0	100-0	99-0			
101	50	STANDARD MIXER	43-0	101-0	42-0			
106	50	STANDARD MIXER	420-0	106-0	76-0			
109	51	FWHT-COND. MIXER	110-0	109-0	204-0			
110	51	FWHT-COND. MIXER	111-0	110-0	205-0			
111	51	FWHT-COND. MIXER	160-0	111-0	173-0			
114	50	STANDARD MIXER	33-0	114-1	115-0			

IP7018916

GEOMETRY CONFIGURATION OF MODEL

COMP NO.	COMP TYPE	COMPONENT DESCRIPTION	CONNECTING STREAM NOS. AND STREAM TYPE (NO. - TYPE) 1 IN	1 OUT	2 IN	2 OUT	3 IN	3 OUT
117	60	DEMAND SPLITTER	116-0	117-0		222-0		
118	68	VALVE STEM LEAK	54-0	118-0		125-0		
119	68	VALVE STEM LEAK	125-0	122-0		157-0		
120	64	SHAFT LEAKAGE	1-0	120-0		180-0		
121	64	SHAFT LEAKAGE	4-0	121-0		123-0		
122	64	SHAFT LEAKAGE	122-0	131-0		156-0		
123	64	SHAFT LEAKAGE	123-0	130-0		183-0		
124	64	SHAFT LEAKAGE	121-0	124-0		184-0		
125	64	SHAFT LEAKAGE	184-0	136-0		186-0		
126	60	DEMAND SPLITTER	66-0	126-0		171-0		
127	64	SHAFT LEAKAGE	777-0	127-2		148-0		
128	64	SHAFT LEAKAGE	124-0	137-0		47-0		
129	61	FIXED FLOW SPLIT	148-0	128-0		181-0		
131	63	FIXED P.C. SPLIT	22-0	135-0		212-0		
132	51	FWHT-COND. MIXER	215-0	132-0	227-0			
133	63	FIXED P.C. SPLIT	30-2	133-0		134-0		
134	63	FIXED P.C. SPLIT	71-0	138-0		144-0		
135	63	FIXED P.C. SPLIT	73-0	139-0		147-0		
136	63	FIXED P.C. SPLIT	74-0	140-0		150-0		
137	63	FIXED P.C. SPLIT	52-0	219-0		220-0		
138	63	FIXED P.C. SPLIT	51-0	149-0		218-0		
139	63	FIXED P.C. SPLIT	50-5	146-5		145-0		
140	51	FWHT-COND. MIXER	18-0	215-0	20-0			
141	67	STM. SEAL REG.	182-0	141-0		211-0		
142	60	DEMAND SPLITTER	143-0	142-2		151-2		
143	60	DEMAND SPLITTER	98-0	143-0		152-2		
144	61	FIXED FLOW SPLIT	27-0	193-0		192-0		
145	61	FIXED FLOW SPLIT	193-0	207-0		194-0		
146	63	FIXED P.C. SPLIT	55-0	187-0		191-0		
147	63	FIXED P.C. SPLIT	418-0	197-0		223-0		
148	63	FIXED P.C. SPLIT	207-0	196-0		200-0		
150	63	FIXED P.C. SPLIT	101-0	600-0		204-0		
151	63	FIXED P.C. SPLIT	31-0	154-0		155-0		153-0
153	63	FIXED P.C. SPLIT	201-0	202-0		203-0		
155	63	FIXED P.C. SPLIT	106-0	608-0		205-0		
158	63	FIXED P.C. SPLIT	159-1	172-0		158-0		
159	63	FIXED P.C. SPLIT	612-2	159-1		177-0		
160	63	FIXED P.C. SPLIT	37-0	160-0		165-0		
161	63	FIXED P.C. SPLIT	36-0	161-0		164-0		
162	63	FIXED P.C. SPLIT	35-0	162-0		163-0		
163	63	FIXED P.C. SPLIT	45-0	173-0		174-0		

IP7018917

GEOMETRY CONFIGURATION OF MODEL

COMP NO.	COMP TYPE	COMPONENT DESCRIPTION	CONNECTING STREAM NOS. AND STREAM TYPE (NO. - TYPE) 1 IN	1 OUT	2 IN	2 OUT	3 IN	3 OUT
166	60	DEMAND SPLITTER	403-0	166-2		224-2		
167	60	DEMAND SPLITTER	402-0	167-2		170-2		
168	60	DEMAND SPLITTER	401-0	168-2		169-2		
173	61	FIXED FLOW SPLIT	85-0	182-0		48-0		
174	51	FWHT-COND. MIXER	83-0	208-0	141-0			
175	51	FWHT-COND. MIXER	417-0	227-0	214-0			
176	31	INFINITE SOURCE		214-0				
219	14	STD. FW. HEATER	155-0	225-0	450-2	226-0		
301	51	FWHT-COND. MIXER	69-0	301-0	226-0			
302	51	FWHT-COND. MIXER	301-0	302-0	21-0			
303	51	FWHT-COND. MIXER	302-0	303-0	321-0			
305	63	FIXED P.C. SPLIT	10-0	305-0		306-0		307-0
319	14	STD. FW. HEATER	153-0	319-0	999-0	321-0		
334	54	TRIPLE MIXER	19-0	334-2	225-0		319-0	
400	30	INFINITE SINK	609-0					
401	61	FIXED FLOW SPLIT	684-0	401-0		407-0		
402	61	FIXED FLOW SPLIT	171-0	402-0		408-0		
403	61	FIXED FLOW SPLIT	411-0	403-0		409-0		
404	51	FWHT-COND. MIXER	84-0	414-0	407-0			
405	51	FWHT-COND. MIXER	414-0	419-0	408-0			
406	51	FWHT-COND. MIXER	419-0	417-0	409-0			
413	61	FIXED FLOW SPLIT	187-0	413-0		421-0		
415	61	FIXED FLOW SPLIT	56-0	418-0		416-0		
416	30	INFINITE SINK	416-0					
417	30	INFINITE SINK	421-0					
450	51	FWHT-COND. MIXER	12-0	450-2	211-0			
600	50	STANDARD MIXER	600-0	199-0	61-0			
608	61	FIXED FLOW SPLIT	608-0	611-0		609-0		
609	61	FIXED FLOW SPLIT	611-0	612-2		610-0		
610	51	FWHT-COND. MIXER	126-0	613-0	610-0			
781	54	TRIPLE MIXER	90-0	781-0	49-0		44-0	
999	51	FWHT-COND. MIXER	81-2	999-0	70-0			

IP7018918

COMPONENT PROPERTIES

COMP	STREAM /PORT	FLU ID	MASS FLOW (LBM/HR)	TEMP (F)	PRESS (PSIA)	QUALITY (R HUM) (-)	ENTH (B/LB)	ENTRPY (B/LB-F)	SPEC. VOLUME (FT3/LBM)
1 TFGS	118/I	0	6870090.	996.4	2339.83	1.892	1461.2	1.53566	3.30E-01
	1/U	0	6870090.	903.6	1706.63	1.512	1423.1	1.53968	4.26E-01
3 TFHP	120/I	0	6852975.	903.6	1706.63	1.512	1423.1	1.53968	4.26E-01
	3/U	0	6262494.	773.3	1101.34	1.282	1367.0	1.53970	6.00E-01
	684/E	0	590481.	772.8	1095.84	1.282	1367.0	1.54020	6.03E-01
4 TFHP	3/I	0	6262494.	773.3	1101.34	1.282	1367.0	1.53970	6.00E-01
	4/U	0	6262494.	629.7	627.83	1.142	1306.5	1.54352	9.37E-01
5 TFIP	67/I	0	5618278.	1000.0	585.77	1.427	1518.4	1.71878	1.45E+00
	5/U	0	5618278.	909.2	415.83	1.347	1474.7	1.72469	1.91E+00
6 TFIP	68/I	0	5635393.	908.9	415.83	1.346	1474.5	1.72458	1.91E+00
	7/U	0	5371225.	793.7	262.42	1.264	1419.6	1.73225	2.79E+00
	411/E	0	264168.	799.1	259.48	1.268	1422.5	1.73581	2.83E+00
TIP LKG			14201.						
7 TFIP	7/I	0	5371225.	793.7	262.42	1.264	1419.6	1.73225	2.79E+00
	777/U	0	4913196.	627.7	139.58	1.169	1340.7	1.73298	4.55E+00
	28/E	0	458029.	627.7	139.58	1.169	1340.7	1.73298	4.55E+00
8 TFLP	127/I	0	4906898.	627.5	137.97	1.169	1340.7	1.73423	4.60E+00
	8/U	0	4739074.	511.6	73.34	1.116	1287.6	1.75105	7.77E+00
	404/E	0	167824.	512.0	72.42	1.117	1287.9	1.75271	7.87E+00
TIP LKG			883.						
9 TFLP	8/I	0	4739074.	511.6	73.34	1.116	1287.6	1.75105	7.77E+00
	9/U	0	4405319.	413.0	44.60	1.075	1242.3	1.75582	1.15E+01
	405/E	0	333755.	412.9	43.98	1.075	1242.3	1.75733	1.16E+01
10 TFLP	9/I	0	4405319.	413.0	44.60	1.075	1242.3	1.75582	1.15E+01
	10/U	0	4230921.	213.6	12.96	1.004	1151.8	1.77250	3.05E+01
	406/E	0	174398.	227.2	12.77	1.011	1158.5	1.78390	3.17E+01
TIP LKG			12864.						
11 TFLP	307/I	0	1410166.	213.6	12.96	1.004	1151.8	1.77250	3.05E+01
	11/U	0	1352596.	165.2	5.36	0.962	1094.3	1.77796	6.63E+01
	12/E	0	57570.	164.6	5.30	0.962	1094.3	1.77922	6.70E+01

IP7018919

COMPONENT PROPERTIES

COMP	STREAM /PORT	FLU ID	MASS FLOW (LBM/HR)	TEMP (F)	PRESS (PSIA)	QUALITY (R HUM) (-)	ENTH (B/LB)	ENTRPY (B/LB-F)	SPEC. VOLUME (FT3/LBM)
12 TFLP	79/I	0	1345570.	165.3	5.37	0.962	1094.5	1.77792	6.61E+01
	16/U	0	1345570.	95.0	0.82	0.929	1029.1	1.86250	3.76E+02
13 TFLP	77/I	0	1340707.	165.1	5.36	0.962	1094.3	1.77797	6.63E+01
	13/U	0	1340707.	104.9	1.10	0.926	1030.9	1.83510	2.82E+02
14 TFLP	11/I	0	1352596.	165.2	5.36	0.962	1094.3	1.77796	6.63E+01
	14/U	0	1352596.	114.9	1.47	0.927	1036.6	1.81571	2.15E+02
15 HFRH	613/T	0	5615774.	630.7	627.83	1.142	1307.2	1.54409	9.38E-01
	15/T	0	5615774.	1000.0	585.77	1.427	1518.4	1.71879	1.45E+00
16 COND	16/S	0	1345570.	95.0	0.82	0.929	1029.1	1.86250	3.76E+02
	108/T	0	95771455.	72.3	50.00	-0.226	40.5	0.07899	1.61E-02
	781/D	0	994319.	95.0	0.82	0.133	202.3	0.37169	5.41E+01
	18/D	0	2339889.	95.0	0.82	0.000	63.0	0.12059	1.61E-02
	23/T	0	95771455.	87.4	50.00	-0.210	55.5	0.10682	1.61E-02
17 COND	13/S	0	1340707.	104.9	1.10	0.926	1030.9	1.83510	2.82E+02
	129/T	0	47878545.	72.3	50.00	-0.226	40.5	0.07899	1.61E-02
	20/D	0	1340707.	104.9	1.10	0.000	72.9	0.13833	1.61E-02
	17/T	0	47878545.	99.2	50.00	-0.197	67.3	0.12816	1.61E-02
18 COND	14/S	0	1352596.	114.9	1.47	0.927	1036.6	1.81571	2.15E+02
	23/T	0	95771455.	87.4	50.00	-0.210	55.5	0.10682	1.61E-02
	132/D	0	3893953.	133.3	11.36	-0.067	101.3	0.18729	1.63E-02
	22/D	0	5246549.	114.9	1.47	0.000	82.9	0.15583	1.62E-02
	62/T	0	95771455.	101.6	50.00	-0.195	69.8	0.13246	1.61E-02
19 FWH	154/T	0	1732853.	123.9	222.70	-0.326	92.5	0.17126	1.62E-02
	80/S	0	69883.	163.3	5.14	0.963	1094.3	1.78240	6.91E+01
	19/T	0	1732853.	162.8	222.70	-0.280	131.3	0.23565	1.64E-02
	21/D	0	69883.	163.3	5.14	0.000	131.3	0.23667	1.64E-02
20 FWH	138/T	0	5197519.	163.0	174.90	-0.248	131.4	0.23598	1.64E-02
	406/S	0	174398.	226.8	12.24	1.011	1158.5	1.78855	3.30E+01
	149/D	0	501578.	211.0	42.47	-0.065	179.2	0.31057	1.67E-02
	24/T	0	5197519.	201.0	174.90	-0.204	169.4	0.29529	1.66E-02
	50/D	0	675977.	171.3	12.24	-0.032	139.3	0.24940	1.65E-02

IP7018920

COMPONENT PROPERTIES

COMP	STREAM /PORT	FLU ID	MASS FLOW (LBM/HR)	TEMP (F)	PRESS (PSIA)	QUALITY (R HUM) (-)	ENTH (B/LB)	ENTRPY (B/LB-F)	SPEC. VOLUME (FT3/LBM)
21 FWH	139/T	0	5197519.	201.0	174.90	-0.204	169.4	0.29529	1.66E-02
	405/S	0	333755.	412.5	42.47	1.076	1242.3	1.76112	1.21E+01
	219/D	0	167824.	276.1	71.07	-0.031	245.3	0.40451	1.72E-02
	25/T	0	5197519.	270.6	174.90	-0.121	239.8	0.39664	1.72E-02
	51/D	0	501578.	211.0	42.47	-0.065	179.2	0.31057	1.67E-02
22 FWH	140/T	0	5197519.	270.6	174.90	-0.121	239.8	0.39664	1.72E-02
	404/S	0	167824.	511.7	71.07	1.117	1287.9	1.75475	8.02E+00
	26/T	0	5197519.	303.4	174.90	-0.082	273.5	0.44175	1.75E-02
	52/D	0	167824.	276.1	71.07	-0.031	245.3	0.40451	1.72E-02
23 D-A	75/FW	0	5197519.	303.6	127.90	-0.050	273.5	0.44195	1.75E-02
	142/S	0	230009.	624.4	135.85	1.168	1339.3	1.73456	4.66E+00
	100/D	0	1492442.	364.0	257.48	-0.051	336.6	0.52100	1.81E-02
	27/D	0	6919971.	350.7	135.85	0.000	322.5	0.50421	1.80E-02
24 FWH	158/T	0	3484500.	355.5	2940.86	-1.942	331.9	0.50438	1.78E-02
	166/S	0	132084.	798.9	257.48	1.268	1422.5	1.73665	2.85E+00
	161/D	0	614137.	413.7	614.08	-0.115	390.3	0.58278	1.88E-02
	34/T	0	3484500.	404.0	2925.22	-1.677	382.6	0.56475	1.84E-02
	37/D	0	746221.	363.9	257.48	-0.051	336.6	0.52100	1.81E-02
25 FWH	172/T	0	3484500.	355.5	2940.86	-1.942	331.9	0.50438	1.78E-02
	224/S	0	132085.	798.9	257.48	1.268	1422.5	1.73665	2.85E+00
	179/D	0	614136.	413.7	614.08	-0.115	390.3	0.58278	1.88E-02
	38/T	0	3484500.	404.0	2925.22	-1.677	382.6	0.56475	1.84E-02
	45/D	0	746221.	363.9	257.48	-0.051	336.6	0.52100	1.81E-02
26 FWH	34/T	0	3484500.	404.0	2914.61	-1.644	382.5	0.56475	1.84E-02
	167/S	0	318895.	628.9	614.08	1.142	1307.2	1.54631	9.59E-01
	162/D	0	295239.	496.9	1084.45	-0.112	484.1	0.68337	2.03E-02
	32/T	0	3484500.	488.5	2898.96	-1.234	474.4	0.66619	1.98E-02
	36/D	0	614137.	413.7	614.08	-0.115	390.3	0.58278	1.88E-02
27 FWH	38/T	0	3484500.	404.0	2914.61	-1.644	382.5	0.56475	1.84E-02
	170/S	0	318897.	628.9	614.08	1.142	1307.2	1.54631	9.59E-01
	178/D	0	295238.	496.9	1084.45	-0.112	484.1	0.68337	2.03E-02
	41/T	0	3484500.	488.5	2898.96	-1.234	474.4	0.66619	1.98E-02
	40/D	0	614136.	413.7	614.08	-0.115	390.3	0.58278	1.88E-02

IP7018921

COMPONENT PROPERTIES

COMP	STREAM /PORT	FLU ID	MASS FLOW (LBM/HR)	TEMP (F)	PRESS (PSIA)	QUALITY (R HUM) (-)	ENTH (B/LB)	ENTRPY (B/LB-F)	SPEC. VOLUME (FT3/LBM)
28 FWH	32/T	0	3484500.	488.4	2893.05	-1.220	474.4	0.66620	1.98E-02
	168/S	0	295242.	771.8	1084.45	1.280	1367.0	1.54124	6.09E-01
	33/T	0	3484500.	552.4	2877.33	-0.897	549.2	0.74259	2.12E-02
	35/D	0	295239.	496.9	1084.45	-0.112	484.1	0.68337	2.03E-02
29 FWH	41/T	0	3484500.	488.4	2893.05	-1.220	474.4	0.66620	1.98E-02
	169/S	0	295239.	771.8	1084.45	1.280	1367.0	1.54124	6.09E-01
	46/T	0	3484500.	552.4	2877.33	-0.897	549.2	0.74259	2.12E-02
	39/D	0	295238.	496.9	1084.45	-0.112	484.1	0.68337	2.03E-02
30 HXGN	104/T	0	5197519.	115.1	410.10	-0.440	84.1	0.15585	1.62E-02
	210/S	0	7717.	627.0	293.66	1.156	1329.9	1.64342	2.11E+00
	30/T	0	5197519.	116.8	410.10	-0.438	85.8	0.15884	1.62E-02
	57/D	0	7717.	203.9	12.50	0.000	172.0	0.29996	1.67E-02
31 HXDC	133/T	0	5197519.	117.3	222.70	-0.334	85.8	0.15981	1.62E-02
	303/S	0	877935.	163.4	5.15	0.000	131.4	0.23687	1.65E-02
	31/T	0	5197519.	123.9	222.70	-0.326	92.5	0.17126	1.62E-02
	49/D	0	877935.	124.1	5.15	-0.039	92.1	0.17170	1.62E-02
32 HXSP	192/T	0	0.	350.7	135.85	0.000	322.5	0.50421	1.80E-02
	55/T	0	0.	350.7	135.85	0.000	322.5	0.50421	1.80E-02
33 HXSP	194/T	0	0.	350.7	135.85	0.000	322.5	0.50421	1.80E-02
	56/T	0	0.	350.7	135.85	0.000	322.5	0.50421	1.80E-02
34 PMEL	200/I	0	3459985.	350.7	135.85	0.000	322.5	0.50421	1.80E-02
	42/U	0	3459985.	351.2	312.40	-0.092	323.2	0.50439	1.80E-02
35 PMEL	196/I	0	3459985.	350.7	135.85	0.000	322.5	0.50421	1.80E-02
	43/U	0	3459985.	351.2	312.40	-0.092	323.2	0.50439	1.80E-02
36 SFIX	199/I	0	6969001.	349.6	312.40	-0.095	321.6	0.50231	1.80E-02
	201/U	0	6969001.	349.6	312.40	-0.095	321.6	0.50231	1.80E-02
	44/B	0	0.	349.6	312.40	-0.095	321.6	0.50231	1.80E-02
37 PMST	202/IP	0	3554190.	349.6	312.40	-0.095	321.6	0.50231	1.80E-02
	152/IT	0	132125.	624.7	138.17	1.168	1339.3	1.73273	4.58E+00
	420/UP	0	3554190.	355.5	2988.40	-2.145	332.0	0.50423	1.78E-02
	63/UT	0	132125.	114.9	1.47	0.949	1059.0	1.85468	2.21E+02

IP7018922

COMPONENT PROPERTIES

COMP	STREAM /PORT	FLU ID	MASS FLOW (LBM/HR)	TEMP (F)	PRESS (PSIA)	QUALITY (R HUM) (-)	ENTH (B/LB)	ENTRPY (B/LB-F)	SPEC. VOLUME (FT3/LBM)
38 PMST	203/IP	0	3414810.	349.6	312.40	-0.095	321.6	0.50231	1.80E-02
	151/IT	0	116384.	624.7	138.17	1.168	1339.3	1.73273	4.58E+00
	76/UP	0	3414810.	355.5	2988.40	-2.145	332.0	0.50423	1.78E-02
	64/UT	0	116384.	95.0	0.82	0.933	1033.6	1.87052	3.77E+02
39 VTHR	117/I	0	6900000.	1000.0	2412.20	1.947	1461.2	1.53267	3.20E-01
	54/U	0	6900000.	996.4	2339.83	1.892	1461.2	1.53566	3.30E-01
40 M3WA	48/IA	0	5200.	639.2	346.20	1.161	1333.0	1.62885	1.80E+00
	47/IB	0	1255.	629.7	627.83	1.142	1306.5	1.54352	9.37E-01
	181/IC	0	1262.	627.7	139.58	1.169	1340.7	1.73298	4.55E+00
	210/U	0	7717.	627.0	293.66	1.156	1329.9	1.64342	2.11E+00
42 PMEL	135/I	0	2623274.	114.9	1.47	0.000	82.9	0.15583	1.62E-02
	58/U	0	2623274.	115.1	410.10	-0.440	84.1	0.15585	1.62E-02
43 PMEL	212/I	0	2623274.	114.9	1.47	0.000	82.9	0.15583	1.62E-02
	60/U	0	2623274.	115.1	410.10	-0.440	84.1	0.15585	1.62E-02
44 SFIX	213/I	0	5246549.	115.1	410.10	-0.440	84.1	0.15585	1.62E-02
	104/U	0	5197519.	115.1	410.10	-0.440	84.1	0.15585	1.62E-02
	61/B	0	49030.	115.1	410.10	-0.440	84.1	0.15585	1.62E-02
46 TFLP	305/I	0	1410589.	213.6	12.96	1.004	1151.8	1.77250	3.05E+01
	77/U	0	1340707.	165.1	5.36	0.962	1094.3	1.77797	6.63E+01
	80/E	0	69883.	164.6	5.29	0.962	1094.3	1.77924	6.71E+01
47 TFLP	306/I	0	1410166.	213.6	12.96	1.004	1151.8	1.77250	3.05E+01
	79/U	0	1345570.	165.3	5.37	0.962	1094.5	1.77792	6.61E+01
	81/E	0	64596.	164.7	5.31	0.962	1094.5	1.77918	6.69E+01
59 IPUT	59/U	0	6900000.	1000.0	2412.20	1.947	1461.2	1.53267	3.20E-01
60 SRCE	107/U	0	143650000.	72.3	50.00	-0.226	40.5	0.07899	1.61E-02
61 SPCT	107/I	0	143650000.	72.3	50.00	-0.226	40.5	0.07899	1.61E-02
	108/U	0	95771455.	72.3	50.00	-0.226	40.5	0.07899	1.61E-02
	129/B	0	47878545.	72.3	50.00	-0.226	40.5	0.07899	1.61E-02
62 MIXR	62/IA	0	95771455.	101.6	50.00	-0.195	69.8	0.13246	1.61E-02
	17/IB	0	47878545.	99.2	50.00	0.197	67.3	0.12816	1.61E-02

IP7018923

COMPONENT PROPERTIES

COMP	STREAM /PORT	FLU ID	MASS FLOW (LBM/HR)	TEMP (F)	PRESS (PSIA)	QUALITY (R HUM) (-)	ENTH (B/LB)	ENTRPY (B/LB-F)	SPEC. VOLUME (FT3/LBM)
63 SINK	105/I	0	143650000.	100.8	50.00	-0.196	68.9	0.13103	1.61E-02
64 OPUT	114/I	0	6969001.	552.3	2854.65	-0.860	549.1	0.74264	2.12E-02
65 SFIX	146/I	0	675977.	163.5	5.15	0.007	139.3	0.24951	5.78E-01
	69/U	0	670664.	163.5	5.15	0.000	131.4	0.23690	1.65E-02
	70/B	0	5313.	163.5	5.15	1.000	1131.2	1.84138	7.15E+01
66 MIXR	137/IA	0	6228399.	629.7	627.83	1.142	1306.5	1.54352	9.37E-01
	131/IB	0	25168.	996.4	2339.83	1.892	1461.2	1.53566	3.30E-01
	66/U	0	6253567.	630.7	627.83	1.142	1307.2	1.54409	9.38E-01
67 MIXR	15/IA	0	5615774.	1000.0	585.77	1.427	1518.4	1.71879	1.45E+00
	156/IB	0	2504.	996.4	2339.83	1.892	1461.2	1.53566	3.30E-01
	67/U	0	5618278.	1000.0	585.77	1.427	1518.4	1.71878	1.45E+00
68 MIXR	5/IA	0	5618278.	909.2	415.83	1.347	1474.7	1.72469	1.91E+00
	180/IB	0	17115.	903.6	1706.63	1.512	1423.1	1.53968	4.26E-01
	68/U	0	5635393.	908.9	415.83	1.346	1474.5	1.72458	1.91E+00
69 MIXR	60/IA	0	2623274.	115.1	410.10	-0.440	84.1	0.15585	1.62E-02
	58/IB	0	2623274.	115.1	410.10	-0.440	84.1	0.15585	1.62E-02
	213/U	0	5246549.	115.1	410.10	-0.440	84.1	0.15585	1.62E-02
71 MIXR	334/IA	0	5197519.	163.0	174.90	-0.248	131.4	0.23598	1.64E-02
	134/IB	0	0.	117.3	222.70	-0.334	85.8	0.15981	1.62E-02
	71/U	0	5197519.	163.0	174.90	-0.248	131.4	0.23598	1.64E-02
72 MIXR	24/IA	0	5197519.	201.0	174.90	-0.204	169.4	0.29529	1.66E-02
	144/IB	0	0.	163.0	174.90	-0.248	131.4	0.23598	1.64E-02
	72/U	0	5197519.	201.0	174.90	-0.204	169.4	0.29529	1.66E-02
73 MIXR	72/IA	0	5197519.	201.0	174.90	-0.204	169.4	0.29529	1.66E-02
	197/IB	0	0.	350.7	135.85	0.000	322.5	0.50421	1.80E-02
	73/U	0	5197519.	201.0	174.90	-0.204	169.4	0.29529	1.66E-02
74 MIXR	25/IA	0	5197519.	270.6	174.90	-0.121	239.8	0.39664	1.72E-02
	147/IB	0	0.	201.0	174.90	-0.204	169.4	0.29529	1.66E-02
	74/U	0	5197519.	270.6	174.90	-0.121	239.8	0.39664	1.72E-02

IP7018924

COMPONENT PROPERTIES

COMP	STREAM /PORT	FLU ID	MASS FLOW (LBM/HR)	TEMP (F)	PRESS (PSIA)	QUALITY (R HUM) (-)	ENTH (B/LB)	ENTRPY (B/LB-F)	SPEC. VOLUME (FT3/LBM)
75 MIXR	26/IA	0	5197519.	303.6	127.90	-0.050	273.5	0.44195	1.75E-02
	150/IB	0	0.	270.6	174.90	-0.121	239.8	0.39664	1.72E-02
	75/U	0	5197519.	303.6	127.90	-0.050	273.5	0.44195	1.75E-02
80 MX51	57/IA	0	7717.	203.9	12.50	0.000	172.0	0.29996	1.67E-02
	63/IB	0	132125.	114.9	1.47	0.949	1059.0	1.85468	2.21E+02
	83/U	0	139842.	203.9	12.50	0.859	1010.1	1.56286	2.68E+01
81 MX51	208/IA	0	144358.	199.9	11.52	0.871	1020.2	1.58585	2.94E+01
	95/IB	0	0.	390.4	428.61	-0.086	364.9	0.55411	1.85E-02
	84/U	0	144358.	199.9	11.52	0.871	1020.2	1.58585	2.94E+01
82 MX51	119/IA	0	0.	1000.0	2412.20	1.947	1461.2	1.53267	3.20E-01
	157/IB	0	2238.	996.4	2339.83	1.892	1461.2	1.53566	3.30E-01
	82/U	0	2238.	996.4	2339.83	1.892	1461.2	1.53566	3.30E-01
83 MX51	82/IA	0	2238.	996.4	2339.83	1.892	1461.2	1.53566	3.30E-01
	183/IB	0	8350.	629.7	627.83	1.142	1306.5	1.54352	9.37E-01
	86/U	0	10588.	698.8	775.53	1.200	1339.2	1.55147	8.10E-01
84 MX51	86/IA	0	10588.	698.8	775.53	1.200	1339.2	1.55147	8.10E-01
	186/IB	0	4001.	629.7	627.83	1.142	1306.5	1.54352	9.37E-01
	102/U	0	14589.	679.6	730.60	1.183	1330.3	1.54965	8.45E-01
85 MX51	102/IA	0	14589.	679.6	730.60	1.183	1330.3	1.54965	8.45E-01
	128/IB	0	5037.	627.7	139.58	1.169	1340.7	1.73298	4.55E+00
	85/U	0	19626.	639.2	346.20	1.161	1333.0	1.62885	1.80E+00
87 MX51	64/IA	0	116384.	95.0	0.82	0.933	1033.6	1.87052	3.77E+02
	220/IB	0	0.	276.1	71.07	-0.031	245.3	0.40451	1.72E-02
	87/U	0	116384.	95.0	0.82	0.933	1033.6	1.87052	3.77E+02
88 MX51	87/IA	0	116384.	95.0	0.82	0.933	1033.6	1.87052	3.77E+02
	218/IB	0	0.	211.0	42.47	-0.065	179.2	0.31057	1.67E-02
	88/U	0	116384.	95.0	0.82	0.933	1033.6	1.87052	3.77E+02
89 MX51	88/IA	0	116384.	95.0	0.82	0.933	1033.6	1.87052	3.77E+02
	145/IB	0	0.	171.3	10.00	-0.022	139.3	0.24941	1.65E-02
	89/U	0	116384.	95.0	0.82	0.933	1033.6	1.87052	3.77E+02

IP7018925

COMPONENT PROPERTIES

COMP	STREAM /PORT	FLU ID	MASS FLOW (LBM/HR)	TEMP (F)	PRESS (PSIA)	QUALITY (R HUM) (-)	ENTH (B/LB)	ENTRPY (B/LB-F)	SPEC. VOLUME (FT3/LBM)
90 MX51	89/IA	0	116384.	95.0	0.82	0.933	1033.6	1.87052	3.77E+02
	413/IB	0	0.	350.7	135.85	0.000	322.5	0.50421	1.80E-02
	90/U	0	116384.	95.0	0.82	0.933	1033.6	1.87052	3.77E+02
93 MX51	163/IA	0	0.	496.9	1084.45	-0.112	484.1	0.68337	2.03E-02
	176/IB	0	0.	496.9	1084.45	-0.112	484.1	0.68337	2.03E-02
	93/U	0	0.	496.9	1084.45	-0.112	484.1	0.68337	2.03E-02
94 M3WA	93/IA	0	0.	496.9	1084.45	-0.112	484.1	0.68337	2.03E-02
	175/IB	0	0.	413.7	614.08	-0.115	390.3	0.58278	1.88E-02
	164/IC	0	0.	413.7	614.08	-0.115	390.3	0.58278	1.88E-02
	94/U	0	0.	442.0	770.87	-0.119	421.6	0.61735	1.92E-02
95 M3WA	94/IA	0	0.	442.0	770.87	-0.119	421.6	0.61735	1.92E-02
	174/IB	0	0.	363.9	257.48	-0.051	336.6	0.52100	1.81E-02
	165/IC	0	0.	363.9	257.48	-0.051	336.6	0.52100	1.81E-02
	95/U	0	0.	390.4	428.61	-0.086	364.9	0.55411	1.85E-02
96 MX51	136/IA	0	5433.	629.7	627.83	1.142	1306.5	1.54352	9.37E-01
	130/IB	0	15055.	629.7	627.83	1.142	1306.5	1.54352	9.37E-01
	96/U	0	20489.	629.7	627.83	1.142	1306.5	1.54352	9.37E-01
97 MX51	28/IA	0	458029.	627.7	139.58	1.169	1340.7	1.73298	4.55E+00
	96/IB	0	20489.	629.7	627.83	1.142	1306.5	1.54352	9.37E-01
	97/U	0	478517.	624.8	139.58	1.168	1339.3	1.73163	4.54E+00
98 MX51	97/IA	0	478517.	624.8	139.58	1.168	1339.3	1.73163	4.54E+00
	222/IB	0	0.	1000.0	2412.20	1.947	1461.2	1.53267	3.20E-01
	98/U	0	478517.	624.8	139.58	1.168	1339.3	1.73163	4.54E+00
99 MX51	191/IA	0	0.	350.7	135.85	0.000	322.5	0.50421	1.80E-02
	223/IB	0	0.	350.7	135.85	0.000	322.5	0.50421	1.80E-02
	99/U	0	0.	350.7	135.85	0.000	322.5	0.50421	1.80E-02
100 MX51	109/IA	0	1492442.	364.0	257.48	-0.051	336.6	0.52100	1.81E-02
	99/IB	0	0.	350.7	135.85	0.000	322.5	0.50421	1.80E-02
	100/U	0	1492442.	364.0	257.48	-0.051	336.6	0.52100	1.81E-02
101 MIXR	43/IA	0	3459985.	351.2	312.40	-0.092	323.2	0.50439	1.80E-02
	42/IB	0	3459985.	351.2	312.40	-0.092	323.2	0.50439	1.80E-02
	101/U	0	6919971.	351.2	312.40	-0.092	323.2	0.50439	1.80E-02

IP7018926

COMPONENT PROPERTIES

COMP	STREAM /PORT	FLU ID	MASS FLOW (LBM/HR)	TEMP (F)	PRESS (PSIA)	QUALITY (R HUM) (-)	ENTH (B/LB)	ENTRPY (B/LB-F)	SPEC. VOLUME (FT3/LBM)
106 MIXR	420/IA	0	3554190.	355.5	2988.40	-2.145	332.0	0.50423	1.78E-02
	76/IB	0	3414810.	355.5	2988.40	-2.145	332.0	0.50423	1.78E-02
	106/U	0	6969001.	355.5	2988.40	-2.145	332.0	0.50423	1.78E-02
109 MX51	110/IA	0	1492442.	364.0	257.48	-0.051	336.6	0.52100	1.81E-02
	204/IB	0	0.	351.2	312.40	-0.092	323.2	0.50439	1.80E-02
	109/U	0	1492442.	364.0	257.48	-0.051	336.6	0.52100	1.81E-02
110 MX51	111/IA	0	1492442.	364.0	257.48	-0.051	336.6	0.52100	1.81E-02
	205/IB	0	0.	355.5	2988.40	-2.145	332.0	0.50423	1.78E-02
	110/U	0	1492442.	364.0	257.48	-0.051	336.6	0.52100	1.81E-02
111 MX51	160/IA	0	746221.	363.9	257.48	-0.051	336.6	0.52100	1.81E-02
	173/IB	0	746221.	363.9	257.48	-0.051	336.6	0.52100	1.81E-02
	111/U	0	1492442.	364.0	257.48	-0.051	336.6	0.52100	1.81E-02
114 MIXR	33/IA	0	3484500.	552.4	2877.33	-0.897	549.2	0.74259	2.12E-02
	115/IB	0	3484500.	552.4	2877.33	-0.897	549.2	0.74259	2.12E-02
	114/U	0	6969001.	552.4	2877.33	-0.897	549.2	0.74259	2.12E-02
115 MIXR	46/IA	0	3484500.	552.4	2877.33	-0.897	549.2	0.74259	2.12E-02
	177/IB	0	0.	355.5	2952.39	-1.986	332.0	0.50438	1.78E-02
	115/U	0	3484500.	552.4	2877.33	-0.897	549.2	0.74259	2.12E-02
116 SDEM	59/I	0	6900000.	1000.0	2412.20	1.947	1461.2	1.53267	3.20E-01
	116/U	0	6900000.	1000.0	2412.20	1.947	1461.2	1.53267	3.20E-01
	119/B	0	0.	1000.0	2412.20	1.947	1461.2	1.53267	3.20E-01
117 SDEM	116/I	0	6900000.	1000.0	2412.20	1.947	1461.2	1.53267	3.20E-01
	117/U	0	6900000.	1000.0	2412.20	1.947	1461.2	1.53267	3.20E-01
	222/B	0	0.	1000.0	2412.20	1.947	1461.2	1.53267	3.20E-01
118 SVSL	54/I	0	6900000.	996.4	2339.83	1.892	1461.2	1.53566	3.30E-01
	118/U	0	6870090.	996.4	2339.83	1.892	1461.2	1.53566	3.30E-01
	125/B	0	29910.	996.4	2339.83	1.892	1461.2	1.53566	3.30E-01
119 SVSL	125/I	0	29910.	996.4	2339.83	1.892	1461.2	1.53566	3.30E-01
	122/U	0	27672.	996.4	2339.83	1.892	1461.2	1.53566	3.30E-01
	157/B	0	2238.	996.4	2339.83	1.892	1461.2	1.53566	3.30E-01

IP7018927

COMPONENT PROPERTIES

COMP	STREAM /PORT	FLU ID	MASS FLOW (LBM/HR)	TEMP (F)	PRESS (PSIA)	QUALITY (R HUM) (-)	ENTH (B/LB)	ENTRPY (B/LB-F)	SPEC. VOLUME (FT3/LBM)
120 SSPL	1/I	0	6870090.	903.6	1706.63	1.512	1423.1	1.53968	4.26E-01
	120/U	0	6852975.	903.6	1706.63	1.512	1423.1	1.53968	4.26E-01
	180/B	0	17115.	903.6	1706.63	1.512	1423.1	1.53968	4.26E-01
121 SSPL	4/I	0	6262494.	629.7	627.83	1.142	1306.5	1.54352	9.37E-01
	121/U	0	6239089.	629.7	627.83	1.142	1306.5	1.54352	9.37E-01
	123/B	0	23405.	629.7	627.83	1.142	1306.5	1.54352	9.37E-01
122 SSPL	122/I	0	27672.	996.4	2339.83	1.892	1461.2	1.53566	3.30E-01
	131/U	0	25168.	996.4	2339.83	1.892	1461.2	1.53566	3.30E-01
	156/B	0	2504.	996.4	2339.83	1.892	1461.2	1.53566	3.30E-01
123 SSPL	123/I	0	23405.	629.7	627.83	1.142	1306.5	1.54352	9.37E-01
	130/U	0	15055.	629.7	627.83	1.142	1306.5	1.54352	9.37E-01
	183/B	0	8350.	629.7	627.83	1.142	1306.5	1.54352	9.37E-01
124 SSPL	121/I	0	6239089.	629.7	627.83	1.142	1306.5	1.54352	9.37E-01
	124/U	0	6229654.	629.7	627.83	1.142	1306.5	1.54352	9.37E-01
	184/B	0	9434.	629.7	627.83	1.142	1306.5	1.54352	9.37E-01
125 SSPL	184/I	0	9434.	629.7	627.83	1.142	1306.5	1.54352	9.37E-01
	136/U	0	5433.	629.7	627.83	1.142	1306.5	1.54352	9.37E-01
	186/B	0	4001.	629.7	627.83	1.142	1306.5	1.54352	9.37E-01
126 SDEM	66/I	0	6253567.	630.7	627.83	1.142	1307.2	1.54409	9.38E-01
	126/U	0	5615774.	630.7	627.83	1.142	1307.2	1.54409	9.38E-01
	171/B	0	637793.	630.7	627.83	1.142	1307.2	1.54409	9.38E-01
127 SSPL	777/I	0	4913196.	627.7	139.58	1.169	1340.7	1.73298	4.55E+00
	127/U	0	4906898.	627.7	139.58	1.169	1340.7	1.73298	4.55E+00
	148/B	0	6299.	627.7	139.58	1.169	1340.7	1.73298	4.55E+00
128 SSPL	124/I	0	6229654.	629.7	627.83	1.142	1306.5	1.54352	9.37E-01
	137/U	0	6228399.	629.7	627.83	1.142	1306.5	1.54352	9.37E-01
	47/B	0	1255.	629.7	627.83	1.142	1306.5	1.54352	9.37E-01
129 SFIX	148/I	0	6299.	627.7	139.58	1.169	1340.7	1.73298	4.55E+00
	128/U	0	5037.	627.7	139.58	1.169	1340.7	1.73298	4.55E+00
	181/B	0	1262.	627.7	139.58	1.169	1340.7	1.73298	4.55E+00

IP7018928

COMPONENT PROPERTIES

COMP	STREAM /PORT	FLU ID	MASS FLOW (LBM/HR)	TEMP (F)	PRESS (PSIA)	QUALITY (R HUM) (-)	ENTH (B/LB)	ENTRPY (B/LB-F)	SPEC. VOLUME (FT3/LBM)
131 SPCT	22/I	0	5246549.	114.9	1.47	0.000	82.9	0.15583	1.62E-02
	135/U	0	2623274.	114.9	1.47	0.000	82.9	0.15583	1.62E-02
	212/B	0	2623274.	114.9	1.47	0.000	82.9	0.15583	1.62E-02
132 MX51	215/IA	0	3680595.	98.6	0.92	-0.000	66.6	0.12714	1.61E-02
	227/IB	0	213358.	199.9	11.52	0.543	699.3	1.09944	1.83E+01
	132/U	0	3893953.	133.3	11.36	-0.067	101.3	0.18729	1.63E-02
133 SPCT	30/I	0	5197519.	117.3	222.70	-0.334	85.8	0.15981	1.62E-02
	133/U	0	5197519.	117.3	222.70	-0.334	85.8	0.15981	1.62E-02
	134/B	0	0.	117.3	222.70	-0.334	85.8	0.15981	1.62E-02
134 SPCT	71/I	0	5197519.	163.0	174.90	-0.248	131.4	0.23598	1.64E-02
	138/U	0	5197519.	163.0	174.90	-0.248	131.4	0.23598	1.64E-02
	144/B	0	0.	163.0	174.90	-0.248	131.4	0.23598	1.64E-02
135 SPCT	73/I	0	5197519.	201.0	174.90	-0.204	169.4	0.29529	1.66E-02
	139/U	0	5197519.	201.0	174.90	-0.204	169.4	0.29529	1.66E-02
	147/B	0	0.	201.0	174.90	-0.204	169.4	0.29529	1.66E-02
136 SPCT	74/I	0	5197519.	270.6	174.90	-0.121	239.8	0.39664	1.72E-02
	140/U	0	5197519.	270.6	174.90	-0.121	239.8	0.39664	1.72E-02
	150/B	0	0.	270.6	174.90	-0.121	239.8	0.39664	1.72E-02
137 SPCT	52/I	0	167824.	276.1	71.07	-0.031	245.3	0.40451	1.72E-02
	219/U	0	167824.	276.1	71.07	-0.031	245.3	0.40451	1.72E-02
	220/B	0	0.	276.1	71.07	-0.031	245.3	0.40451	1.72E-02
138 SPCT	51/I	0	501578.	211.0	42.47	-0.065	179.2	0.31057	1.67E-02
	149/U	0	501578.	211.0	42.47	-0.065	179.2	0.31057	1.67E-02
	218/B	0	0.	211.0	42.47	-0.065	179.2	0.31057	1.67E-02
139 SPCT	50/I	0	675977.	171.3	10.00	-0.022	139.3	0.24941	1.65E-02
	146/U	0	675977.	171.3	10.00	-0.022	139.3	0.24941	1.65E-02
	145/B	0	0.	171.3	10.00	-0.022	139.3	0.24941	1.65E-02
140 MX51	18/IA	0	2339889.	95.0	0.82	0.000	63.0	0.12059	1.61E-02
	20/IB	0	1340707.	104.9	1.10	0.000	72.9	0.13833	1.61E-02
	215/U	0	3680595.	98.6	0.92	-0.000	66.6	0.12714	1.61E-02

IP7018929

COMPONENT PROPERTIES

COMP	STREAM /PORT	FLU ID	MASS FLOW (LBM/HR)	TEMP (F)	PRESS (PSIA)	QUALITY (R HUM) (-)	ENTH (B/LB)	ENTRPY (B/LB-F)	SPEC. VOLUME (FT3/LBM)
141 SSSR	182/I	0	14426.	639.2	346.20	1.161	1333.0	1.62885	1.80E+00
	141/U	0	4516.	593.8	5.00	1.202	1333.0	2.09054	1.25E+02
	211/B	0	9910.	593.8	5.00	1.202	1333.0	2.09054	1.25E+02
142 SDEM	143/I	0	346393.	624.8	139.58	1.168	1339.3	1.73163	4.54E+00
	142/U	0	230009.	624.8	139.58	1.168	1339.3	1.73163	4.54E+00
	151/B	0	116384.	624.8	139.58	1.168	1339.3	1.73163	4.54E+00
143 SDEM	98/I	0	478517.	624.8	139.58	1.168	1339.3	1.73163	4.54E+00
	143/U	0	346393.	624.8	139.58	1.168	1339.3	1.73163	4.54E+00
	152/B	0	132125.	624.8	139.58	1.168	1339.3	1.73163	4.54E+00
144 SFIX	27/I	0	6919971.	350.7	135.85	0.000	322.5	0.50421	1.80E-02
	193/U	0	6919971.	350.7	135.85	0.000	322.5	0.50421	1.80E-02
	192/B	0	0.	350.7	135.85	0.000	322.5	0.50421	1.80E-02
145 SFIX	193/I	0	6919971.	350.7	135.85	0.000	322.5	0.50421	1.80E-02
	207/U	0	6919971.	350.7	135.85	0.000	322.5	0.50421	1.80E-02
	194/B	0	0.	350.7	135.85	0.000	322.5	0.50421	1.80E-02
146 SPCT	55/I	0	0.	350.7	135.85	0.000	322.5	0.50421	1.80E-02
	187/U	0	0.	350.7	135.85	0.000	322.5	0.50421	1.80E-02
	191/B	0	0.	350.7	135.85	0.000	322.5	0.50421	1.80E-02
147 SPCT	418/I	0	0.	350.7	135.85	0.000	322.5	0.50421	1.80E-02
	197/U	0	0.	350.7	135.85	0.000	322.5	0.50421	1.80E-02
	223/B	0	0.	350.7	135.85	0.000	322.5	0.50421	1.80E-02
148 SPCT	207/I	0	6919971.	350.7	135.85	0.000	322.5	0.50421	1.80E-02
	196/U	0	3459985.	350.7	135.85	0.000	322.5	0.50421	1.80E-02
	200/B	0	3459985.	350.7	135.85	0.000	322.5	0.50421	1.80E-02
150 SPCT	101/I	0	6919971.	351.2	312.40	-0.092	323.2	0.50439	1.80E-02
	600/U	0	6919971.	351.2	312.40	-0.092	323.2	0.50439	1.80E-02
	204/B	0	0.	351.2	312.40	-0.092	323.2	0.50439	1.80E-02
151 SPCT	31/I	0	5197519.	123.9	222.70	-0.326	92.5	0.17126	1.62E-02
	154/U	0	1732853.	123.9	222.70	-0.326	92.5	0.17126	1.62E-02
	155/B	0	1732333.	123.9	222.70	-0.326	92.5	0.17126	1.62E-02
	153/C	0	1732333.	123.9	222.70	-0.326	92.5	0.17126	1.62E-02

IP7018930

COMPONENT PROPERTIES

COMP	STREAM /PORT	FLU ID	MASS FLOW (LBM/HR)	TEMP (F)	PRESS (PSIA)	QUALITY (R HUM) (-)	ENTH (B/LB)	ENTRPY (B/LB-F)	SPEC. VOLUME (FT3/LBM)
153 SPCT	201/I	0	6969001.	349.6	312.40	-0.095	321.6	0.50231	1.80E-02
	202/U	0	3554190.	349.6	312.40	-0.095	321.6	0.50231	1.80E-02
	203/B	0	3414810.	349.6	312.40	-0.095	321.6	0.50231	1.80E-02
155 SPCT	106/I	0	6969001.	355.5	2988.40	-2.145	332.0	0.50423	1.78E-02
	608/U	0	6969001.	355.5	2988.40	-2.145	332.0	0.50423	1.78E-02
	205/B	0	0.	355.5	2988.40	-2.145	332.0	0.50423	1.78E-02
158 SPCT	159/I	0	6969001.	355.5	2940.86	-1.942	331.9	0.50438	1.78E-02
	172/U	0	3484500.	355.5	2940.86	-1.942	331.9	0.50438	1.78E-02
	158/B	0	3484500.	355.5	2940.86	-1.942	331.9	0.50438	1.78E-02
159 SPCT	612/I	0	6969001.	355.5	2952.39	-1.986	332.0	0.50438	1.78E-02
	159/U	0	6969001.	355.5	2952.39	-1.986	332.0	0.50438	1.78E-02
	177/B	0	0.	355.5	2952.39	-1.986	332.0	0.50438	1.78E-02
160 SPCT	37/I	0	746221.	363.9	257.48	-0.051	336.6	0.52100	1.81E-02
	160/U	0	746221.	363.9	257.48	-0.051	336.6	0.52100	1.81E-02
	165/B	0	0.	363.9	257.48	-0.051	336.6	0.52100	1.81E-02
161 SPCT	36/I	0	614137.	413.7	614.08	-0.115	390.3	0.58278	1.88E-02
	161/U	0	614137.	413.7	614.08	-0.115	390.3	0.58278	1.88E-02
	164/B	0	0.	413.7	614.08	-0.115	390.3	0.58278	1.88E-02
162 SPCT	35/I	0	295239.	496.9	1084.45	-0.112	484.1	0.68337	2.03E-02
	162/U	0	295239.	496.9	1084.45	-0.112	484.1	0.68337	2.03E-02
	163/B	0	0.	496.9	1084.45	-0.112	484.1	0.68337	2.03E-02
163 SPCT	45/I	0	746221.	363.9	257.48	-0.051	336.6	0.52100	1.81E-02
	173/U	0	746221.	363.9	257.48	-0.051	336.6	0.52100	1.81E-02
	174/B	0	0.	363.9	257.48	-0.051	336.6	0.52100	1.81E-02
164 SPCT	40/I	0	614136.	413.7	614.08	-0.115	390.3	0.58278	1.88E-02
	179/U	0	614136.	413.7	614.08	-0.115	390.3	0.58278	1.88E-02
	175/B	0	0.	413.7	614.08	-0.115	390.3	0.58278	1.88E-02
165 SPCT	39/I	0	295238.	496.9	1084.45	-0.112	484.1	0.68337	2.03E-02
	178/U	0	295238.	496.9	1084.45	-0.112	484.1	0.68337	2.03E-02
	176/B	0	0.	496.9	1084.45	-0.112	484.1	0.68337	2.03E-02

IP7018931

COMPONENT PROPERTIES

COMP	STREAM /PORT	FLU ID	MASS FLOW (LBM/HR)	TEMP (F)	PRESS (PSIA)	QUALITY (R HUM) (-)	ENTH (B/LB)	ENTRPY (B/LB-F)	SPEC. VOLUME (FT3/LBM)
166 SDEM	403/I	0	264168.	799.1	259.48	1.268	1422.5	1.73581	2.83E+00
	166/U	0	132084.	799.1	259.48	1.268	1422.5	1.73581	2.83E+00
	224/B	0	132085.	799.1	259.48	1.268	1422.5	1.73581	2.83E+00
167 SDEM	402/I	0	637793.	630.7	627.83	1.142	1307.2	1.54409	9.38E-01
	167/U	0	318895.	630.7	627.83	1.142	1307.2	1.54409	9.38E-01
	170/B	0	318897.	630.7	627.83	1.142	1307.2	1.54409	9.38E-01
168 SDEM	401/I	0	590481.	772.8	1095.84	1.282	1367.0	1.54020	6.03E-01
	168/U	0	295242.	772.8	1095.84	1.282	1367.0	1.54020	6.03E-01
	169/B	0	295239.	772.8	1095.84	1.282	1367.0	1.54020	6.03E-01
173 SFIX	85/I	0	19626.	639.2	346.20	1.161	1333.0	1.62885	1.80E+00
	182/U	0	14426.	639.2	346.20	1.161	1333.0	1.62885	1.80E+00
	48/B	0	5200.	639.2	346.20	1.161	1333.0	1.62885	1.80E+00
174 MX51	83/IA	0	139842.	203.9	12.50	0.859	1010.1	1.56286	2.68E+01
	141/IB	0	4516.	593.8	5.00	1.202	1333.0	2.09054	1.25E+02
	208/U	0	144358.	199.9	11.52	0.871	1020.2	1.58585	2.94E+01
175 MX51	417/IA	0	144358.	199.9	11.52	0.871	1020.2	1.58585	2.94E+01
	214/IB	0	69000.	60.0	15.00	-0.157	28.1	0.05561	1.60E-02
	227/U	0	213358.	199.9	11.52	0.543	699.3	1.09944	1.83E+01
176 SRCE	214/U	0	69000.	60.0	15.00	-0.157	28.1	0.05561	1.60E-02
219 FWH	155/T	0	1732333.	123.9	222.70	-0.326	92.5	0.17126	1.62E-02
	450/S	0	67480.	163.4	5.14	0.998	1129.4	1.83863	7.15E+01
	225/T	0	1732333.	162.9	222.70	-0.280	131.4	0.23572	1.64E-02
	226/D	0	67480.	163.4	5.14	0.000	131.3	0.23674	1.64E-02
301 MX51	69/IA	0	670664.	163.5	5.15	0.000	131.4	0.23690	1.65E-02
	226/IB	0	67480.	163.4	5.14	0.000	131.3	0.23674	1.64E-02
	301/U	0	738144.	163.5	5.15	0.000	131.4	0.23689	1.65E-02
302 MX51	301/IA	0	738144.	163.5	5.15	0.000	131.4	0.23689	1.65E-02
	21/IB	0	69883.	163.3	5.14	0.000	131.3	0.23667	1.64E-02
	302/U	0	808027.	163.4	5.15	0.000	131.4	0.23687	1.65E-02
303 MX51	302/IA	0	808027.	163.4	5.15	0.000	131.4	0.23687	1.65E-02
	221/IB	0	69900.	163.5	5.15	0.000	131.4	0.23690	1.64E-02

IP7018932

COMPONENT PROPERTIES

COMP	STREAM /PORT	FLU ID	MASS FLOW (LBM/HR)	TEMP (F)	PRESS (PSIA)	QUALITY (R HUM) (-)	ENTH (B/LB)	ENTRPY (B/LB-F)	SPEC. VOLUME (FT3/LBM)
305 SPCT	10/I	0	4230921.	213.6	12.96	1.004	1151.8	1.77250	3.05E+01
	305/U	0	1410589.	213.6	12.96	1.004	1151.8	1.77250	3.05E+01
	306/B	0	1410166.	213.6	12.96	1.004	1151.8	1.77250	3.05E+01
	307/C	0	1410166.	213.6	12.96	1.004	1151.8	1.77250	3.05E+01
319 FWH	153/T	0	1732333.	123.9	222.70	-0.326	92.5	0.17126	1.62E-02
	999/S	0	69909.	163.5	5.15	0.966	1097.3	1.78683	6.90E+01
	319/T	0	1732333.	163.0	222.70	-0.280	131.5	0.23588	1.64E-02
	321/D	0	69909.	163.5	5.15	0.000	131.4	0.23690	1.64E-02
334 M3WA	19/IA	0	1732853.	162.8	222.70	-0.280	131.3	0.23565	1.64E-02
	225/IB	0	1732333.	162.9	222.70	-0.280	131.4	0.23572	1.64E-02
	319/IC	0	1732333.	163.0	222.70	-0.280	131.5	0.23588	1.64E-02
	334/U	0	5197519.	162.9	222.70	-0.280	131.4	0.23575	1.64E-02
400 SINK	609/I	0	0.	355.5	2988.40	-2.145	332.0	0.50423	1.78E-02
401 SFIX	684/I	0	590481.	772.8	1095.84	1.282	1367.0	1.54020	6.03E-01
	401/U	0	590481.	772.8	1095.84	1.282	1367.0	1.54020	6.03E-01
	407/B	0	0.	772.8	1095.84	1.282	1367.0	1.54020	6.03E-01
402 SFIX	171/I	0	637793.	630.7	627.83	1.142	1307.2	1.54409	9.38E-01
	402/U	0	637793.	630.7	627.83	1.142	1307.2	1.54409	9.38E-01
	408/B	0	0.	630.7	627.83	1.142	1307.2	1.54409	9.38E-01
403 SFIX	411/I	0	264168.	799.1	259.48	1.268	1422.5	1.73581	2.83E+00
	403/U	0	264168.	799.1	259.48	1.268	1422.5	1.73581	2.83E+00
	409/B	0	0.	799.1	259.48	1.268	1422.5	1.73581	2.83E+00
404 MX51	84/IA	0	144358.	199.9	11.52	0.871	1020.2	1.58585	2.94E+01
	407/IB	0	0.	772.8	1095.84	1.282	1367.0	1.54020	6.03E-01
	414/U	0	144358.	199.9	11.52	0.871	1020.2	1.58585	2.94E+01
405 MX51	414/IA	0	144358.	199.9	11.52	0.871	1020.2	1.58585	2.94E+01
	408/IB	0	0.	630.7	627.83	1.142	1307.2	1.54409	9.38E-01
	419/U	0	144358.	199.9	11.52	0.871	1020.2	1.58585	2.94E+01
406 MX51	419/IA	0	144358.	199.9	11.52	0.871	1020.2	1.58585	2.94E+01
	409/IB	0	0.	799.1	259.48	1.268	1422.5	1.73581	2.83E+00
	417/U	0	144358.	199.9	11.52	0.871	1020.2	1.58585	2.94E+01

IP7018933

COMPONENT PROPERTIES

COMP	STREAM /PORT	FLU ID	MASS FLOW (LBM/HR)	TEMP (F)	PRESS (PSIA)	QUALITY (R HUM) (-)	ENTH (B/LB)	ENTRPY (B/LB-F)	SPEC. VOLUME (FT3/LBM)
413 SFIX	187/I	0	0.	350.7	135.85	0.000	322.5	0.50421	1.80E-02
	413/U	0	0.	350.7	135.85	0.000	322.5	0.50421	1.80E-02
	421/B	0	0.	350.7	135.85	0.000	322.5	0.50421	1.80E-02
415 SFIX	56/I	0	0.	350.7	135.85	0.000	322.5	0.50421	1.80E-02
	418/U	0	0.	350.7	135.85	0.000	322.5	0.50421	1.80E-02
	416/B	0	0.	350.7	135.85	0.000	322.5	0.50421	1.80E-02
416 SINK	416/I	0	0.	350.7	135.85	0.000	322.5	0.50421	1.80E-02
417 SINK	421/I	0	0.	350.7	135.85	0.000	322.5	0.50421	1.80E-02
450 MX51	12/IA	0	57570.	164.6	5.30	0.962	1094.3	1.77922	6.70E+01
	211/IB	0	9910.	593.8	5.00	1.202	1333.0	2.09054	1.25E+02
	450/U	0	67480.	164.6	5.30	0.997	1129.4	1.83535	6.95E+01
600 MIXR	600/IA	0	6919971.	351.2	312.40	-0.092	323.2	0.50439	1.80E-02
	61/IB	0	49030.	115.1	410.10	-0.440	84.1	0.15585	1.62E-02
	199/U	0	6969001.	349.6	312.40	-0.095	321.6	0.50231	1.80E-02
608 SFIX	608/I	0	6969001.	355.5	2988.40	-2.145	332.0	0.50423	1.78E-02
	611/U	0	6969001.	355.5	2988.40	-2.145	332.0	0.50423	1.78E-02
	609/B	0	0.	355.5	2988.40	-2.145	332.0	0.50423	1.78E-02
609 SFIX	611/I	0	6969001.	355.5	2988.40	-2.145	332.0	0.50423	1.78E-02
	612/U	0	6969001.	355.5	2988.40	-2.145	332.0	0.50423	1.78E-02
	610/B	0	0.	355.5	2988.40	-2.145	332.0	0.50423	1.78E-02
610 MX51	126/IA	0	5615774.	630.7	627.83	1.142	1307.2	1.54409	9.38E-01
	610/IB	0	0.	355.5	2988.40	-2.145	332.0	0.50423	1.78E-02
	613/U	0	5615774.	630.7	627.83	1.142	1307.2	1.54409	9.38E-01
781 M3WA	90/IA	0	116384.	95.0	0.82	0.933	1033.6	1.87052	3.77E+02
	49/IB	0	877935.	124.1	5.15	-0.039	92.1	0.17170	1.62E-02
	44/IC	0	0.	349.6	312.40	-0.095	321.6	0.50231	1.80E-02
	781/U	0	994319.	95.0	0.82	0.133	202.3	0.37169	5.41E+01
999 MX51	81/IA	0	64596.	163.5	5.15	0.963	1094.5	1.78235	6.88E+01
	70/IB	0	5313.	163.5	5.15	1.000	1131.2	1.84138	7.15E+01
	999/U	0	69909.	163.5	5.15	0.966	1097.3	1.78683	6.90E+01

IP7018934

STREAM PROPERTIES

STRM NO.	STRM TYPE	COMP FRM/TO ID	FLU ID	MASS FLOW (LBM/HR)	TEMP (F)	PRESS (PSIA)	QUAL (HUM) (-)	ENTH (B/LB)	ENTRPY (B/LB-F)	SPEC. VOLUME (FT3/LBM)
1	0	1-U (+)	0	6870090.	903.6	1706.63	1.512	1423.1	1.53968	4.260E-01
		120-I (-)			903.6	1706.63	1.512	1423.1	1.53968	4.260E-01
3	0	3-U (+)	0	6262494.	773.3	1101.34	1.282	1367.0	1.53970	5.996E-01
		4-I (-)			773.3	1101.34	1.282	1367.0	1.53970	5.996E-01
4	0	4-U (+)	0	6262494.	629.7	627.83	1.142	1306.5	1.54352	9.369E-01
		121-I (-)			629.7	627.83	1.142	1306.5	1.54352	9.369E-01
5	0	5-U (+)	0	5618278.	909.2	415.83	1.347	1474.7	1.72469	1.915E+00
		68-IA(-)			909.2	415.83	1.347	1474.7	1.72469	1.915E+00
7	0	6-U (+)	0	5371225.	793.7	262.42	1.264	1419.6	1.73225	2.785E+00
		7-I (-)			793.7	262.42	1.264	1419.6	1.73225	2.785E+00
8	0	8-U (+)	0	4739074.	511.6	73.34	1.116	1287.6	1.75105	7.765E+00
		9-I (-)			511.6	73.34	1.116	1287.6	1.75105	7.765E+00
9	0	9-U (+)	0	4405319.	413.0	44.60	1.075	1242.3	1.75582	1.149E+01
		10-I (-)			413.0	44.60	1.075	1242.3	1.75582	1.149E+01
10	0	10-U (+)	0	4230921.	213.6	12.96	1.004	1151.8	1.77250	3.054E+01
		305-I (-)			213.6	12.96	1.004	1151.8	1.77250	3.054E+01
11	0	11-U (+)	0	1352596.	165.2	5.36	0.962	1094.3	1.77796	6.627E+01
		14-I (-)			165.2	5.36	0.962	1094.3	1.77796	6.627E+01
12	0	11-E (+)	0	57570.	164.6	5.30	0.962	1094.3	1.77922	6.704E+01
		450-IA(-)			164.6	5.30	0.962	1094.3	1.77922	6.704E+01
13	0	13-U (+)	0	1340707.	104.9	1.10	0.926	1030.9	1.83510	2.824E+02
		17-S (-)			104.9	1.10	0.926	1030.9	1.83510	2.824E+02
14	0	14-U (+)	0	1352596.	114.9	1.47	0.927	1036.6	1.81571	2.154E+02
		18-S (-)			114.9	1.47	0.927	1036.6	1.81571	2.154E+02
* 15	0	15-T (+)	0	5615774.	1000.0	585.77	1.427	1518.4	1.71879	1.446E+00
		67-IA(-)			1000.0	585.77	1.427	1518.4	1.71879	1.446E+00

IP7018935

STREAM PROPERTIES

STRM NO.	STRM TYPE	COMP FRM/TO ID	FLU ID	MASS FLOW (LBM/HR)	TEMP (F)	PRESS (PSIA)	QUAL (HUM) (-)	ENTH (B/LB)	ENTRPY (B/LB-F)	SPEC. VOLUME (FT3/LBM)
16	0	12-U (+)	0	1345570.	95.0	0.82	0.929	1029.1	1.86250	3.757E+02
		16-S (-)			95.0	0.82	0.929	1029.1	1.86250	3.757E+02
17	0	17-T (+)	0	47878545.	99.2	50.00	-0.197	67.3	0.12816	1.613E-02
		62-IB(-)			99.2	50.00	-0.197	67.3	0.12816	1.613E-02
18	0	16-D (+)	0	2339889.	95.0	0.82	0.000	63.0	0.12059	1.612E-02
		140-IA(-)			95.0	0.82	0.000	63.0	0.12059	1.612E-02
19	0	19-T (+)	0	1732853.	162.8	222.70	-0.280	131.3	0.23565	1.640E-02
		334-IA(-)			162.8	222.70	-0.280	131.3	0.23565	1.640E-02
20	0	17-D (+)	0	1340707.	104.9	1.10	0.000	72.9	0.13833	1.615E-02
		140-IB(-)			104.9	1.10	0.000	72.9	0.13833	1.615E-02
21	0	19-D (+)	0	69883.	163.3	5.14	0.000	131.3	0.23667	1.641E-02
		302-IB(-)			163.3	5.14	0.000	131.3	0.23667	1.641E-02
22	0	18-D (+)	0	5246549.	114.9	1.47	0.000	82.9	0.15583	1.618E-02
		131-I (-)			114.9	1.47	0.000	82.9	0.15583	1.618E-02
23	0	16-T (+)	0	95771455.	87.4	50.00	-0.210	55.5	0.10682	1.609E-02
		18-T (-)			87.4	50.00	-0.210	55.5	0.10682	1.609E-02
24	0	20-T (+)	0	5197519.	201.0	174.90	-0.204	169.4	0.29529	1.663E-02
		72-IA(-)			201.0	174.90	-0.204	169.4	0.29529	1.663E-02
25	0	21-T (+)	0	5197519.	270.6	174.90	-0.121	239.8	0.39664	1.717E-02
		74-IA(-)			270.6	174.90	-0.121	239.8	0.39664	1.717E-02
26	2	22-T (+)	0	5197519.	303.4	174.90	-0.082	273.5	0.44175	1.747E-02
		75-IA(-)			303.6	127.90	-0.050	273.5	0.44195	1.748E-02
27	0	23-D (+)	0	6919971.	350.7	135.85	0.000	322.5	0.50421	1.800E-02
		144-I (-)			350.7	135.85	0.000	322.5	0.50421	1.800E-02
28	0	7-E (+)	0	458029.	627.7	139.58	1.169	1340.7	1.73298	4.551E+00
		97-IA(-)			627.7	139.58	1.169	1340.7	1.73298	4.551E+00

IP7018936

STREAM PROPERTIES

STRM NO.	STRM TYPE	COMP FRM/TO ID	FLU ID	MASS FLOW (LBM/HR)	TEMP (F)	PRESS (PSIA)	QUAL (HUM) (-)	ENTH (B/LB)	ENTRPY (B/LB-F)	SPEC. VOLUME (FT3/LBM)
30	2	30-T (+)	0	5197519.	116.8	410.10	-0.438	85.8	0.15884	1.617E-02
		133-I (-)			117.3	222.70	-0.334	85.8	0.15981	1.618E-02
31	0	31-T (+)	0	5197519.	123.9	222.70	-0.326	92.5	0.17126	1.621E-02
		151-I (-)			123.9	222.70	-0.326	92.5	0.17126	1.621E-02
32	1	26-T (+)	0	3484500.	488.5	2898.96	-1.234	474.4	0.66619	1.975E-02
		28-T (-)			488.4	2893.05	-1.220	474.4	0.66620	1.975E-02
33	0	28-T (+)	0	3484500.	552.4	2877.33	-0.897	549.2	0.74259	2.123E-02
		114-IA(-)			552.4	2877.33	-0.897	549.2	0.74259	2.123E-02
34	1	24-T (+)	0	3484500.	404.0	2925.22	-1.677	382.6	0.56475	1.840E-02
		26-T (-)			404.0	2914.61	-1.644	382.5	0.56475	1.840E-02
35	0	28-D (+)	0	295239.	496.9	1084.45	-0.112	484.1	0.68337	2.028E-02
		162-I (-)			496.9	1084.45	-0.112	484.1	0.68337	2.028E-02
36	0	26-D (+)	0	614137.	413.7	614.08	-0.115	390.3	0.58278	1.880E-02
		161-I (-)			413.7	614.08	-0.115	390.3	0.58278	1.880E-02
37	0	24-D (+)	0	746221.	363.9	257.48	-0.051	336.6	0.52100	1.815E-02
		160-I (-)			363.9	257.48	-0.051	336.6	0.52100	1.815E-02
38	1	25-T (+)	0	3484500.	404.0	2925.22	-1.677	382.6	0.56475	1.840E-02
		27-T (-)			404.0	2914.61	-1.644	382.5	0.56475	1.840E-02
39	0	29-D (+)	0	295238.	496.9	1084.45	-0.112	484.1	0.68337	2.028E-02
		165-I (-)			496.9	1084.45	-0.112	484.1	0.68337	2.028E-02
40	0	27-D (+)	0	614136.	413.7	614.08	-0.115	390.3	0.58278	1.880E-02
		164-I (-)			413.7	614.08	-0.115	390.3	0.58278	1.880E-02
41	1	27-T (+)	0	3484500.	488.5	2898.96	-1.234	474.4	0.66619	1.975E-02
		29-T (-)			488.4	2893.05	-1.220	474.4	0.66620	1.975E-02
* 42	0	34-U (+)	0	3459985.	351.2	312.40	-0.092	323.2	0.50439	1.798E-02
		101-IB(-)			351.2	312.40	-0.092	323.2	0.50439	1.798E-02

IP7018937

STREAM PROPERTIES

STRM NO.	STRM TYPE	COMP FRM/TO ID	FLU ID	MASS FLOW (LBM/HR)	TEMP (F)	PRESS (PSIA)	QUAL (HUM) (-)	ENTH (B/LB)	ENTRPY (B/LB-F)	SPEC. VOLUME (FT3/LBM)
* 43	0	35-U (+)	0	3459985.	351.2	312.40	-0.092	323.2	0.50439	1.798E-02
		101-IA(-)			351.2	312.40	-0.092	323.2	0.50439	1.798E-02
44	0	36-B (+)	0	0.	349.6	312.40	-0.095	321.6	0.50231	1.797E-02
		781-IC(-)			349.6	312.40	-0.095	321.6	0.50231	1.797E-02
45	0	25-D (+)	0	746221.	363.9	257.48	-0.051	336.6	0.52100	1.815E-02
		163-I (-)			363.9	257.48	-0.051	336.6	0.52100	1.815E-02
46	0	29-T (+)	0	3484500.	552.4	2877.33	-0.897	549.2	0.74259	2.123E-02
		115-IA(-)			552.4	2877.33	-0.897	549.2	0.74259	2.123E-02
47	0	128-B (+)	0	1255.	629.7	627.83	1.142	1306.5	1.54352	9.369E-01
		40-IB(-)			629.7	627.83	1.142	1306.5	1.54352	9.369E-01
48	0	173-B (+)	0	5200.	639.2	346.20	1.161	1333.0	1.62885	1.801E+00
		40-IA(-)			639.2	346.20	1.161	1333.0	1.62885	1.801E+00
49	0	31-D (+)	0	877935.	124.1	5.15	-0.039	92.1	0.17170	1.622E-02
		781-IB(-)			124.1	5.15	-0.039	92.1	0.17170	1.622E-02
* 50	5	20-D (+)	0	675977.	171.3	12.24	-0.032	139.3	0.24940	1.646E-02
		139-I (-)			171.3	10.00	-0.022	139.3	0.24941	1.646E-02
51	0	21-D (+)	0	501578.	211.0	42.47	-0.065	179.2	0.31057	1.671E-02
		138-I (-)			211.0	42.47	-0.065	179.2	0.31057	1.671E-02
52	0	22-D (+)	0	167824.	276.1	71.07	-0.031	245.3	0.40451	1.722E-02
		137-I (-)			276.1	71.07	-0.031	245.3	0.40451	1.722E-02
54	0	39-U (+)	0	6900000.	996.4	2339.83	1.892	1461.2	1.53566	3.300E-01
		118-I (-)			996.4	2339.83	1.892	1461.2	1.53566	3.300E-01
55	0	32-T (+)	0	0.	350.7	135.85	0.000	322.5	0.50421	1.800E-02
		146-I (-)			350.7	135.85	0.000	322.5	0.50421	1.800E-02
56	0	33-T (+)	0	0.	350.7	135.85	0.000	322.5	0.50421	1.800E-02
		415-I (-)			350.7	135.85	0.000	322.5	0.50421	1.800E-02

IP7018938

STREAM PROPERTIES

STRM NO.	STRM TYPE	COMP FRM/TO ID	FLU ID	MASS FLOW (LBM/HR)	TEMP (F)	PRESS (PSIA)	QUAL (HUM) (-)	ENTH (B/LB)	ENTRPY (B/LB-F)	SPEC. VOLUME (FT3/LBM)
* 57	0	30-D (+)	0	7717.	203.9	12.50	0.000	172.0	0.29996	1.666E-02
		80-IA(-)			203.9	12.50	0.000	172.0	0.29996	1.666E-02
* 58	0	42-U (+)	0	2623274.	115.1	410.10	-0.440	84.1	0.15585	1.617E-02
		69-IB(-)			115.1	410.10	-0.440	84.1	0.15585	1.617E-02
59	0	59-U (+)	0	6900000.	1000.0	2412.20	1.947	1461.2	1.53267	3.200E-01
		116-I (-)			1000.0	2412.20	1.947	1461.2	1.53267	3.200E-01
* 60	0	43-U (+)	0	2623274.	115.1	410.10	-0.440	84.1	0.15585	1.617E-02
		69-IA(-)			115.1	410.10	-0.440	84.1	0.15585	1.617E-02
61	0	44-B (+)	0	49030.	115.1	410.10	-0.440	84.1	0.15585	1.617E-02
		600-IB(-)			115.1	410.10	-0.440	84.1	0.15585	1.617E-02
62	0	18-T (+)	0	95771455.	101.6	50.00	-0.195	69.8	0.13246	1.613E-02
		62-IA(-)			101.6	50.00	-0.195	69.8	0.13246	1.613E-02
63	0	37-UT(+)	0	132125.	114.9	1.47	0.949	1059.0	1.85468	2.205E+02
		80-IB(-)			114.9	1.47	0.949	1059.0	1.85468	2.205E+02
64	0	38-UT(+)	0	116384.	95.0	0.82	0.933	1033.6	1.87052	3.775E+02
		87-IA(-)			95.0	0.82	0.933	1033.6	1.87052	3.775E+02
66	0	66-U (+)	0	6253567.	630.7	627.83	1.142	1307.2	1.54409	9.381E-01
		126-I (-)			630.7	627.83	1.142	1307.2	1.54409	9.381E-01
67	2	67-U (+)	0	5618278.	1000.0	585.77	1.427	1518.4	1.71878	1.446E+00
		5-I (-)			1000.0	585.77	1.427	1518.4	1.71878	1.446E+00
68	0	68-U (+)	0	5635393.	908.9	415.83	1.346	1474.5	1.72458	1.914E+00
		6-I (-)			908.9	415.83	1.346	1474.5	1.72458	1.914E+00
69	0	65-U (+)	0	670664.	163.5	5.15	0.000	131.4	0.23690	1.652E-02
		301-IA(-)			163.5	5.15	0.000	131.4	0.23690	1.652E-02
70	0	65-B (+)	0	5313.	163.5	5.15	1.000	1131.2	1.84138	7.147E+01
		999-IB(-)			163.5	5.15	1.000	1131.2	1.84138	7.147E+01

IP7018939

STREAM PROPERTIES

STRM NO.	STRM TYPE	COMP FRM/TO ID	FLU ID	MASS FLOW (LBM/HR)	TEMP (F)	PRESS (PSIA)	QUAL (HUM) (-)	ENTH (B/LB)	ENTRPY (B/LB-F)	SPEC. VOLUME (FT3/LBM)
71	0	71-U (+)	0	5197519.	163.0	174.90	-0.248	131.4	0.23598	1.640E-02
		134-I (-)			163.0	174.90	-0.248	131.4	0.23598	1.640E-02
72	0	72-U (+)	0	5197519.	201.0	174.90	-0.204	169.4	0.29529	1.663E-02
		73-IA(-)			201.0	174.90	-0.204	169.4	0.29529	1.663E-02
73	0	73-U (+)	0	5197519.	201.0	174.90	-0.204	169.4	0.29529	1.663E-02
		135-I (-)			201.0	174.90	-0.204	169.4	0.29529	1.663E-02
74	0	74-U (+)	0	5197519.	270.6	174.90	-0.121	239.8	0.39664	1.717E-02
		136-I (-)			270.6	174.90	-0.121	239.8	0.39664	1.717E-02
75	0	75-U (+)	0	5197519.	303.6	127.90	-0.050	273.5	0.44195	1.748E-02
		23-FW(-)			303.6	127.90	-0.050	273.5	0.44195	1.748E-02
* 76	0	38-UP(+)	0	3414810.	355.5	2988.40	-2.145	332.0	0.50423	1.780E-02
		106-IB(-)			355.5	2988.40	-2.145	332.0	0.50423	1.780E-02
77	0	46-U (+)	0	1340707.	165.1	5.36	0.962	1094.3	1.77797	6.633E+01
		13-I (-)			165.1	5.36	0.962	1094.3	1.77797	6.633E+01
79	0	47-U (+)	0	1345570.	165.3	5.37	0.962	1094.5	1.77792	6.613E+01
		12-I (-)			165.3	5.37	0.962	1094.5	1.77792	6.613E+01
80	2	46-E (+)	0	69883.	164.6	5.29	0.962	1094.3	1.77924	6.710E+01
		19-S (-)			163.3	5.14	0.963	1094.3	1.78240	6.905E+01
81	2	47-E (+)	0	64596.	164.7	5.31	0.962	1094.5	1.77918	6.690E+01
		999-IA(-)			163.5	5.15	0.963	1094.5	1.78235	6.885E+01
82	0	82-U (+)	0	2238.	996.4	2339.83	1.892	1461.2	1.53566	3.300E-01
		83-IA(-)			996.4	2339.83	1.892	1461.2	1.53566	3.300E-01
83	0	80-U (+)	0	139842.	203.9	12.50	0.859	1010.1	1.56286	2.680E+01
		174-IA(-)			203.9	12.50	0.859	1010.1	1.56286	2.680E+01
84	0	81-U (+)	0	144358.	199.9	11.52	0.871	1020.2	1.58585	2.935E+01
		404-IA(-)			199.9	11.52	0.871	1020.2	1.58585	2.935E+01

IP7018940

STREAM PROPERTIES

STRM NO.	STRM TYPE	COMP FRM/TO ID	FLU ID	MASS FLOW (LBM/HR)	TEMP (F)	PRESS (PSIA)	QUAL (HUM) (-)	ENTH (B/LB)	ENTRPY (B/LB-F)	SPEC. VOLUME (FT3/LBM)
85	0	85-U (+)	0	19626.	639.2	346.20	1.161	1333.0	1.62885	1.801E+00
		173-I (-)			639.2	346.20	1.161	1333.0	1.62885	1.801E+00
86	0	83-U (+)	0	10588.	698.8	775.53	1.200	1339.2	1.55147	8.097E-01
		84-IA(-)			698.8	775.53	1.200	1339.2	1.55147	8.097E-01
87	0	87-U (+)	0	116384.	95.0	0.82	0.933	1033.6	1.87052	3.775E+02
		88-IA(-)			95.0	0.82	0.933	1033.6	1.87052	3.775E+02
88	0	88-U (+)	0	116384.	95.0	0.82	0.933	1033.6	1.87052	3.775E+02
		89-IA(-)			95.0	0.82	0.933	1033.6	1.87052	3.775E+02
89	0	89-U (+)	0	116384.	95.0	0.82	0.933	1033.6	1.87052	3.775E+02
		90-IA(-)			95.0	0.82	0.933	1033.6	1.87052	3.775E+02
90	0	90-U (+)	0	116384.	95.0	0.82	0.933	1033.6	1.87052	3.775E+02
		781-IA(-)			95.0	0.82	0.933	1033.6	1.87052	3.775E+02
93	0	93-U (+)	0	0.	496.9	1084.45	-0.112	484.1	0.68337	2.028E-02
		94-IA(-)			496.9	1084.45	-0.112	484.1	0.68337	2.028E-02
94	0	94-U (+)	0	0.	442.0	770.87	-0.119	421.6	0.61735	1.924E-02
		95-IA(-)			442.0	770.87	-0.119	421.6	0.61735	1.924E-02
95	0	95-U (+)	0	0.	390.4	428.61	-0.086	364.9	0.55411	1.848E-02
		81-IB(-)			390.4	428.61	-0.086	364.9	0.55411	1.848E-02
96	0	96-U (+)	0	20489.	629.7	627.83	1.142	1306.5	1.54352	9.369E-01
		97-IB(-)			629.7	627.83	1.142	1306.5	1.54352	9.369E-01
97	0	97-U (+)	0	478517.	624.8	139.58	1.168	1339.3	1.73163	4.538E+00
		98-IA(-)			624.8	139.58	1.168	1339.3	1.73163	4.538E+00
98	0	98-U (+)	0	478517.	624.8	139.58	1.168	1339.3	1.73163	4.538E+00
		143-I (-)			624.8	139.58	1.168	1339.3	1.73163	4.538E+00
99	0	99-U (+)	0	0.	350.7	135.85	0.000	322.5	0.50421	1.800E-02
		100-IB(-)			350.7	135.85	0.000	322.5	0.50421	1.800E-02

IP7018941

STREAM PROPERTIES

STRM NO.	STRM TYPE	COMP FRM/TO ID	FLU ID	MASS FLOW (LBM/HR)	TEMP (F)	PRESS (PSIA)	QUAL (HUM) (-)	ENTH (B/LB)	ENTRPY (B/LB-F)	SPEC. VOLUME (FT3/LBM)
100	0	100-U (+)	0	1492442.	364.0	257.48	-0.051	336.6	0.52100	1.815E-02
		23-D (-)			364.0	257.48	-0.051	336.6	0.52100	1.815E-02
101	0	101-U (+)	0	6919971.	351.2	312.40	-0.092	323.2	0.50439	1.798E-02
		150-I (-)			351.2	312.40	-0.092	323.2	0.50439	1.798E-02
102	0	84-U (+)	0	14589.	679.6	730.60	1.183	1330.3	1.54965	8.446E-01
		85-IA(-)			679.6	730.60	1.183	1330.3	1.54965	8.446E-01
104	0	44-U (+)	0	5197519.	115.1	410.10	-0.440	84.1	0.15585	1.617E-02
		30-T (-)			115.1	410.10	-0.440	84.1	0.15585	1.617E-02
105	0	62-U (+)	0	143650000.	100.8	50.00	-0.196	68.9	0.13103	1.613E-02
		63-I (-)			100.8	50.00	-0.196	68.9	0.13103	1.613E-02
106	0	106-U (+)	0	6969001.	355.5	2988.40	-2.145	332.0	0.50423	1.780E-02
		155-I (-)			355.5	2988.40	-2.145	332.0	0.50423	1.780E-02
107	0	60-U (+)	0	143650000.	72.3	50.00	-0.226	40.5	0.07899	1.605E-02
		61-I (-)			72.3	50.00	-0.226	40.5	0.07899	1.605E-02
108	0	61-U (+)	0	95771455.	72.3	50.00	-0.226	40.5	0.07899	1.605E-02
		16-T (-)			72.3	50.00	-0.226	40.5	0.07899	1.605E-02
109	0	109-U (+)	0	1492442.	364.0	257.48	-0.051	336.6	0.52100	1.815E-02
		100-IA(-)			364.0	257.48	-0.051	336.6	0.52100	1.815E-02
110	0	110-U (+)	0	1492442.	364.0	257.48	-0.051	336.6	0.52100	1.815E-02
		109-IA(-)			364.0	257.48	-0.051	336.6	0.52100	1.815E-02
111	0	111-U (+)	0	1492442.	364.0	257.48	-0.051	336.6	0.52100	1.815E-02
		110-IA(-)			364.0	257.48	-0.051	336.6	0.52100	1.815E-02
114	1	114-U (+)	0	6969001.	552.4	2877.33	-0.897	549.2	0.74259	2.123E-02
		64-I (-)			552.3	2854.65	-0.860	549.1	0.74264	2.123E-02
115	0	115-U (+)	0	3484500.	552.4	2877.33	-0.897	549.2	0.74259	2.123E-02
		114-IB(-)			552.4	2877.33	-0.897	549.2	0.74259	2.123E-02

IP7018942

STREAM PROPERTIES

STRM NO.	STRM TYPE	COMP FRM/TO ID	FLU ID	MASS FLOW (LBM/HR)	TEMP (F)	PRESS (PSIA)	QUAL (HUM) (-)	ENTH (B/LB)	ENTRPY (B/LB-F)	SPEC. VOLUME (FT3/LBM)
116	0	116-U (+)	0	6900000.	1000.0	2412.20	1.947	1461.2	1.53267	3.200E-01
		117-I (-)			1000.0	2412.20	1.947	1461.2	1.53267	3.200E-01
117	0	117-U (+)	0	6900000.	1000.0	2412.20	1.947	1461.2	1.53267	3.200E-01
		39-I (-)			1000.0	2412.20	1.947	1461.2	1.53267	3.200E-01
118	0	118-U (+)	0	6870090.	996.4	2339.83	1.892	1461.2	1.53566	3.300E-01
		1-I (-)			996.4	2339.83	1.892	1461.2	1.53566	3.300E-01
119	0	116-B (+)	0	0.	1000.0	2412.20	1.947	1461.2	1.53267	3.200E-01
		82-IA(-)			1000.0	2412.20	1.947	1461.2	1.53267	3.200E-01
120	0	120-U (+)	0	6852975.	903.6	1706.63	1.512	1423.1	1.53968	4.260E-01
		3-I (-)			903.6	1706.63	1.512	1423.1	1.53968	4.260E-01
121	0	121-U (+)	0	6239089.	629.7	627.83	1.142	1306.5	1.54352	9.369E-01
		124-I (-)			629.7	627.83	1.142	1306.5	1.54352	9.369E-01
122	0	119-U (+)	0	27672.	996.4	2339.83	1.892	1461.2	1.53566	3.300E-01
		122-I (-)			996.4	2339.83	1.892	1461.2	1.53566	3.300E-01
123	0	121-B (+)	0	23405.	629.7	627.83	1.142	1306.5	1.54352	9.369E-01
		123-I (-)			629.7	627.83	1.142	1306.5	1.54352	9.369E-01
124	0	124-U (+)	0	6229654.	629.7	627.83	1.142	1306.5	1.54352	9.369E-01
		128-I (-)			629.7	627.83	1.142	1306.5	1.54352	9.369E-01
125	0	118-B (+)	0	29910.	996.4	2339.83	1.892	1461.2	1.53566	3.300E-01
		119-I (-)			996.4	2339.83	1.892	1461.2	1.53566	3.300E-01
126	0	126-U (+)	0	5615774.	630.7	627.83	1.142	1307.2	1.54409	9.381E-01
		610-IA(-)			630.7	627.83	1.142	1307.2	1.54409	9.381E-01
127	2	127-U (+)	0	4906898.	627.7	139.58	1.169	1340.7	1.73298	4.551E+00
		8-I (-)			627.5	137.97	1.169	1340.7	1.73423	4.604E+00
128	0	129-U (+)	0	5037.	627.7	139.58	1.169	1340.7	1.73298	4.551E+00
		85-IB(-)			627.7	139.58	1.169	1340.7	1.73298	4.551E+00

IP7018943

STREAM PROPERTIES

STRM NO.	STRM TYPE	COMP FRM/TO ID	FLU ID	MASS FLOW (LBM/HR)	TEMP (F)	PRESS (PSIA)	QUAL (HUM) (-)	ENTH (B/LB)	ENTRPY (B/LB-F)	SPEC. VOLUME (FT3/LBM)
129	0	61-B (+)	0	47878545.	72.3	50.00	-0.226	40.5	0.07899	1.605E-02
		17-T (-)			72.3	50.00	-0.226	40.5	0.07899	1.605E-02
130	0	123-U (+)	0	15055.	629.7	627.83	1.142	1306.5	1.54352	9.369E-01
		96-IB(-)			629.7	627.83	1.142	1306.5	1.54352	9.369E-01
131	0	122-U (+)	0	25168.	996.4	2339.83	1.892	1461.2	1.53566	3.300E-01
		66-IB(-)			996.4	2339.83	1.892	1461.2	1.53566	3.300E-01
132	0	132-U (+)	0	3893953.	133.3	11.36	-0.067	101.3	0.18729	1.626E-02
		18-D (-)			133.3	11.36	-0.067	101.3	0.18729	1.626E-02
133	0	133-U (+)	0	5197519.	117.3	222.70	-0.334	85.8	0.15981	1.618E-02
		31-T (-)			117.3	222.70	-0.334	85.8	0.15981	1.618E-02
134	0	133-B (+)	0	0.	117.3	222.70	-0.334	85.8	0.15981	1.618E-02
		71-IB(-)			117.3	222.70	-0.334	85.8	0.15981	1.618E-02
135	0	131-U (+)	0	2623274.	114.9	1.47	0.000	82.9	0.15583	1.618E-02
		42-I (-)			114.9	1.47	0.000	82.9	0.15583	1.618E-02
136	0	125-U (+)	0	5433.	629.7	627.83	1.142	1306.5	1.54352	9.369E-01
		96-IA(-)			629.7	627.83	1.142	1306.5	1.54352	9.369E-01
137	0	128-U (+)	0	6228399.	629.7	627.83	1.142	1306.5	1.54352	9.369E-01
		66-IA(-)			629.7	627.83	1.142	1306.5	1.54352	9.369E-01
138	0	134-U (+)	0	5197519.	163.0	174.90	-0.248	131.4	0.23598	1.640E-02
		20-T (-)			163.0	174.90	-0.248	131.4	0.23598	1.640E-02
139	0	135-U (+)	0	5197519.	201.0	174.90	-0.204	169.4	0.29529	1.663E-02
		21-T (-)			201.0	174.90	-0.204	169.4	0.29529	1.663E-02
140	0	136-U (+)	0	5197519.	270.6	174.90	-0.121	239.8	0.39664	1.717E-02
		22-T (-)			270.6	174.90	-0.121	239.8	0.39664	1.717E-02
141	0	141-U (+)	0	4516.	593.8	5.00	1.202	1333.0	2.09054	1.254E+02
		174-IB(-)			593.8	5.00	1.202	1333.0	2.09054	1.254E+02

IP7018944

STREAM PROPERTIES

STRM NO.	STRM TYPE	COMP FRM/TO ID	FLU ID	MASS FLOW (LBM/HR)	TEMP (F)	PRESS (PSIA)	QUAL (HUM) (-)	ENTH (B/LB)	ENTRPY (B/LB-F)	SPEC. VOLUME (FT3/LBM)
142	2	142-U (+)	0	230009.	624.8	139.58	1.168	1339.3	1.73163	4.538E+00
		23-S (-)			624.4	135.85	1.168	1339.3	1.73456	4.663E+00
143	0	143-U (+)	0	346393.	624.8	139.58	1.168	1339.3	1.73163	4.538E+00
		142-I (-)			624.8	139.58	1.168	1339.3	1.73163	4.538E+00
144	0	134-B (+)	0	0.	163.0	174.90	-0.248	131.4	0.23598	1.640E-02
		72-IB(-)			163.0	174.90	-0.248	131.4	0.23598	1.640E-02
145	0	139-B (+)	0	0.	171.3	10.00	-0.022	139.3	0.24941	1.646E-02
		89-IB(-)			171.3	10.00	-0.022	139.3	0.24941	1.646E-02
*146	5	139-U (+)	0	675977.	171.3	10.00	-0.022	139.3	0.24941	1.646E-02
		65-I (-)			163.5	5.15	0.007	139.3	0.24951	5.781E-01
147	0	135-B (+)	0	0.	201.0	174.90	-0.204	169.4	0.29529	1.663E-02
		74-IB(-)			201.0	174.90	-0.204	169.4	0.29529	1.663E-02
148	0	127-B (+)	0	6299.	627.7	139.58	1.169	1340.7	1.73298	4.551E+00
		129-I (-)			627.7	139.58	1.169	1340.7	1.73298	4.551E+00
149	0	138-U (+)	0	501578.	211.0	42.47	-0.065	179.2	0.31057	1.671E-02
		20-D (-)			211.0	42.47	-0.065	179.2	0.31057	1.671E-02
150	0	136-B (+)	0	0.	270.6	174.90	-0.121	239.8	0.39664	1.717E-02
		75-IB(-)			270.6	174.90	-0.121	239.8	0.39664	1.717E-02
151	2	142-B (+)	0	116384.	624.8	139.58	1.168	1339.3	1.73163	4.538E+00
		38-IT(-)			624.7	138.17	1.168	1339.3	1.73273	4.585E+00
152	2	143-B (+)	0	132125.	624.8	139.58	1.168	1339.3	1.73163	4.538E+00
		37-IT(-)			624.7	138.17	1.168	1339.3	1.73273	4.585E+00
153	0	151-C (+)	0	1732333.	123.9	222.70	-0.326	92.5	0.17126	1.621E-02
		319-T (-)			123.9	222.70	-0.326	92.5	0.17126	1.621E-02
154	0	151-U (+)	0	1732853.	123.9	222.70	-0.326	92.5	0.17126	1.621E-02
		19-T (-)			123.9	222.70	-0.326	92.5	0.17126	1.621E-02

IP7018945

STREAM PROPERTIES

STRM NO.	STRM TYPE	COMP FRM/TO ID	FLU ID	MASS FLOW (LBM/HR)	TEMP (F)	PRESS (PSIA)	QUAL (HUM) (-)	ENTH (B/LB)	ENTRPY (B/LB-F)	SPEC. VOLUME (FT3/LBM)
155	0	151-B (+)	0	1732333.	123.9	222.70	-0.326	92.5	0.17126	1.621E-02
		219-T (-)			123.9	222.70	-0.326	92.5	0.17126	1.621E-02
156	0	122-B (+)	0	2504.	996.4	2339.83	1.892	1461.2	1.53566	3.300E-01
		67-IB(-)			996.4	2339.83	1.892	1461.2	1.53566	3.300E-01
157	0	119-B (+)	0	2238.	996.4	2339.83	1.892	1461.2	1.53566	3.300E-01
		82-IB(-)			996.4	2339.83	1.892	1461.2	1.53566	3.300E-01
158	0	158-B (+)	0	3484500.	355.5	2940.86	-1.942	331.9	0.50438	1.781E-02
		24-T (-)			355.5	2940.86	-1.942	331.9	0.50438	1.781E-02
159	1	159-U (+)	0	6969001.	355.5	2952.39	-1.986	332.0	0.50438	1.781E-02
		158-I (-)			355.5	2940.86	-1.942	331.9	0.50438	1.781E-02
160	0	160-U (+)	0	746221.	363.9	257.48	-0.051	336.6	0.52100	1.815E-02
		111-IA(-)			363.9	257.48	-0.051	336.6	0.52100	1.815E-02
161	0	161-U (+)	0	614137.	413.7	614.08	-0.115	390.3	0.58278	1.880E-02
		24-D (-)			413.7	614.08	-0.115	390.3	0.58278	1.880E-02
162	0	162-U (+)	0	295239.	496.9	1084.45	-0.112	484.1	0.68337	2.028E-02
		26-D (-)			496.9	1084.45	-0.112	484.1	0.68337	2.028E-02
163	0	162-B (+)	0	0.	496.9	1084.45	-0.112	484.1	0.68337	2.028E-02
		93-IA(-)			496.9	1084.45	-0.112	484.1	0.68337	2.028E-02
164	0	161-B (+)	0	0.	413.7	614.08	-0.115	390.3	0.58278	1.880E-02
		94-IC(-)			413.7	614.08	-0.115	390.3	0.58278	1.880E-02
165	0	160-B (+)	0	0.	363.9	257.48	-0.051	336.6	0.52100	1.815E-02
		95-IC(-)			363.9	257.48	-0.051	336.6	0.52100	1.815E-02
166	2	166-U (+)	0	132084.	799.1	259.48	1.268	1422.5	1.73581	2.831E+00
		24-S (-)			798.9	257.48	1.268	1422.5	1.73665	2.853E+00
167	2	167-U (+)	0	318895.	630.7	627.83	1.142	1307.2	1.54409	9.381E-01
		26-S (-)			628.9	614.08	1.142	1307.2	1.54631	9.593E-01

IP7018946

STREAM PROPERTIES

STRM NO.	STRM TYPE	COMP FRM/TO ID	FLU ID	MASS FLOW (LBM/HR)	TEMP (F)	PRESS (PSIA)	QUAL (HUM) (-)	ENTH (B/LB)	ENTRPY (B/LB-F)	SPEC. VOLUME (FT3/LBM)
168	2	168-U (+)	0	295242.	772.8	1095.84	1.282	1367.0	1.54020	6.026E-01
		28-S (-)			771.8	1084.45	1.280	1367.0	1.54124	6.090E-01
169	2	168-B (+)	0	295239.	772.8	1095.84	1.282	1367.0	1.54020	6.026E-01
		29-S (-)			771.8	1084.45	1.280	1367.0	1.54124	6.090E-01
170	2	167-B (+)	0	318897.	630.7	627.83	1.142	1307.2	1.54409	9.381E-01
		27-S (-)			628.9	614.08	1.142	1307.2	1.54631	9.593E-01
171	0	126-B (+)	0	637793.	630.7	627.83	1.142	1307.2	1.54409	9.381E-01
		402-I (-)			630.7	627.83	1.142	1307.2	1.54409	9.381E-01
172	0	158-U (+)	0	3484500.	355.5	2940.86	-1.942	331.9	0.50438	1.781E-02
		25-T (-)			355.5	2940.86	-1.942	331.9	0.50438	1.781E-02
173	0	163-U (+)	0	746221.	363.9	257.48	-0.051	336.6	0.52100	1.815E-02
		111-IB(-)			363.9	257.48	-0.051	336.6	0.52100	1.815E-02
174	0	163-B (+)	0	0.	363.9	257.48	-0.051	336.6	0.52100	1.815E-02
		95-IB(-)			363.9	257.48	-0.051	336.6	0.52100	1.815E-02
175	0	164-B (+)	0	0.	413.7	614.08	-0.115	390.3	0.58278	1.880E-02
		94-IB(-)			413.7	614.08	-0.115	390.3	0.58278	1.880E-02
176	0	165-B (+)	0	0.	496.9	1084.45	-0.112	484.1	0.68337	2.028E-02
		93-IB(-)			496.9	1084.45	-0.112	484.1	0.68337	2.028E-02
177	0	159-B (+)	0	0.	355.5	2952.39	-1.986	332.0	0.50438	1.781E-02
		115-IB(-)			355.5	2952.39	-1.986	332.0	0.50438	1.781E-02
178	0	165-U (+)	0	295238.	496.9	1084.45	-0.112	484.1	0.68337	2.028E-02
		27-D (-)			496.9	1084.45	-0.112	484.1	0.68337	2.028E-02
179	0	164-U (+)	0	614136.	413.7	614.08	-0.115	390.3	0.58278	1.880E-02
		25-D (-)			413.7	614.08	-0.115	390.3	0.58278	1.880E-02
180	0	120-B (+)	0	17115.	903.6	1706.63	1.512	1423.1	1.53968	4.260E-01
		68-IB(-)			903.6	1706.63	1.512	1423.1	1.53968	4.260E-01

IP7018947

STREAM PROPERTIES

STRM NO.	STRM TYPE	COMP FRM/TO ID	FLU ID	MASS FLOW (LBM/HR)	TEMP (F)	PRESS (PSIA)	QUAL (HUM) (-)	ENTH (B/LB)	ENTRPY (B/LB-F)	SPEC. VOLUME (FT3/LBM)
181	0	129-B (+)	0	1262.	627.7	139.58	1.169	1340.7	1.73298	4.551E+00
		40-IC(-)			627.7	139.58	1.169	1340.7	1.73298	4.551E+00
182	0	173-U (+)	0	14426.	639.2	346.20	1.161	1333.0	1.62885	1.801E+00
		141-I (-)			639.2	346.20	1.161	1333.0	1.62885	1.801E+00
183	0	123-B (+)	0	8350.	629.7	627.83	1.142	1306.5	1.54352	9.369E-01
		83-IB(-)			629.7	627.83	1.142	1306.5	1.54352	9.369E-01
184	0	124-B (+)	0	9434.	629.7	627.83	1.142	1306.5	1.54352	9.369E-01
		125-I (-)			629.7	627.83	1.142	1306.5	1.54352	9.369E-01
186	0	125-B (+)	0	4001.	629.7	627.83	1.142	1306.5	1.54352	9.369E-01
		84-IB(-)			629.7	627.83	1.142	1306.5	1.54352	9.369E-01
187	0	146-U (+)	0	0.	350.7	135.85	0.000	322.5	0.50421	1.800E-02
		413-I (-)			350.7	135.85	0.000	322.5	0.50421	1.800E-02
191	0	146-B (+)	0	0.	350.7	135.85	0.000	322.5	0.50421	1.800E-02
		99-IA(-)			350.7	135.85	0.000	322.5	0.50421	1.800E-02
192	0	144-B (+)	0	0.	350.7	135.85	0.000	322.5	0.50421	1.800E-02
		32-T (-)			350.7	135.85	0.000	322.5	0.50421	1.800E-02
193	0	144-U (+)	0	6919971.	350.7	135.85	0.000	322.5	0.50421	1.800E-02
		145-I (-)			350.7	135.85	0.000	322.5	0.50421	1.800E-02
194	0	145-B (+)	0	0.	350.7	135.85	0.000	322.5	0.50421	1.800E-02
		33-T (-)			350.7	135.85	0.000	322.5	0.50421	1.800E-02
196	0	148-U (+)	0	3459985.	350.7	135.85	0.000	322.5	0.50421	1.800E-02
		35-I (-)			350.7	135.85	0.000	322.5	0.50421	1.800E-02
197	0	147-U (+)	0	0.	350.7	135.85	0.000	322.5	0.50421	1.800E-02
		73-IB(-)			350.7	135.85	0.000	322.5	0.50421	1.800E-02
199	0	600-U (+)	0	6969001.	349.6	312.40	-0.095	321.6	0.50231	1.797E-02
		36-I (-)			349.6	312.40	-0.095	321.6	0.50231	1.797E-02

IP7018948

STREAM PROPERTIES

STRM NO.	STRM TYPE	COMP FRM/TO ID	FLU ID	MASS FLOW (LBM/HR)	TEMP (F)	PRESS (PSIA)	QUAL (HUM) (-)	ENTH (B/LB)	ENTRPY (B/LB-F)	SPEC. VOLUME (FT3/LBM)
200	0	148-B (+)	0	3459985.	350.7	135.85	0.000	322.5	0.50421	1.800E-02
		34-I (-)			350.7	135.85	0.000	322.5	0.50421	1.800E-02
201	0	36-U (+)	0	6969001.	349.6	312.40	-0.095	321.6	0.50231	1.797E-02
		153-I (-)			349.6	312.40	-0.095	321.6	0.50231	1.797E-02
202	0	153-U (+)	0	3554190.	349.6	312.40	-0.095	321.6	0.50231	1.797E-02
		37-IP(-)			349.6	312.40	-0.095	321.6	0.50231	1.797E-02
203	0	153-B (+)	0	3414810.	349.6	312.40	-0.095	321.6	0.50231	1.797E-02
		38-IP(-)			349.6	312.40	-0.095	321.6	0.50231	1.797E-02
204	0	150-B (+)	0	0.	351.2	312.40	-0.092	323.2	0.50439	1.798E-02
		109-IB(-)			351.2	312.40	-0.092	323.2	0.50439	1.798E-02
205	0	155-B (+)	0	0.	355.5	2988.40	-2.145	332.0	0.50423	1.780E-02
		110-IB(-)			355.5	2988.40	-2.145	332.0	0.50423	1.780E-02
207	0	145-U (+)	0	6919971.	350.7	135.85	0.000	322.5	0.50421	1.800E-02
		148-I (-)			350.7	135.85	0.000	322.5	0.50421	1.800E-02
208	0	174-U (+)	0	144358.	199.9	11.52	0.871	1020.2	1.58585	2.935E+01
		81-IA(-)			199.9	11.52	0.871	1020.2	1.58585	2.935E+01
210	0	40-U (+)	0	7717.	627.0	293.66	1.156	1329.9	1.64342	2.112E+00
		30-S (-)			627.0	293.66	1.156	1329.9	1.64342	2.112E+00
211	0	141-B (+)	0	9910.	593.8	5.00	1.202	1333.0	2.09054	1.254E+02
		450-IB(-)			593.8	5.00	1.202	1333.0	2.09054	1.254E+02
212	0	131-B (+)	0	2623274.	114.9	1.47	0.000	82.9	0.15583	1.618E-02
		43-I (-)			114.9	1.47	0.000	82.9	0.15583	1.618E-02
213	0	69-U (+)	0	5246549.	115.1	410.10	-0.440	84.1	0.15585	1.617E-02
		44-I (-)			115.1	410.10	-0.440	84.1	0.15585	1.617E-02
214	0	176-U (+)	0	69000.	60.0	15.00	-0.157	28.1	0.05561	1.603E-02
		175-IB(-)			60.0	15.00	-0.157	28.1	0.05561	1.603E-02

IP7018949

STREAM PROPERTIES

STRM NO.	STRM TYPE	COMP FRM/TO ID	FLU ID	MASS FLOW (LBM/HR)	TEMP (F)	PRESS (PSIA)	QUAL (HUM) (-)	ENTH (B/LB)	ENTRPY (B/LB-F)	SPEC. VOLUME (FT3/LBM)
215	0	140-U (+)	0	3680595.	98.6	0.92	-0.000	66.6	0.12714	1.613E-02
		132-IA(-)			98.6	0.92	-0.000	66.6	0.12714	1.613E-02
218	0	138-B (+)	0	0.	211.0	42.47	-0.065	179.2	0.31057	1.671E-02
		88-IB(-)			211.0	42.47	-0.065	179.2	0.31057	1.671E-02
219	0	137-U (+)	0	167824.	276.1	71.07	-0.031	245.3	0.40451	1.722E-02
		21-D (-)			276.1	71.07	-0.031	245.3	0.40451	1.722E-02
220	0	137-B (+)	0	0.	276.1	71.07	-0.031	245.3	0.40451	1.722E-02
		87-IB(-)			276.1	71.07	-0.031	245.3	0.40451	1.722E-02
222	0	117-B (+)	0	0.	1000.0	2412.20	1.947	1461.2	1.53267	3.200E-01
		98-IB(-)			1000.0	2412.20	1.947	1461.2	1.53267	3.200E-01
223	0	147-B (+)	0	0.	350.7	135.85	0.000	322.5	0.50421	1.800E-02
		99-IB(-)			350.7	135.85	0.000	322.5	0.50421	1.800E-02
224	2	166-B (+)	0	132085.	799.1	259.48	1.268	1422.5	1.73581	2.831E+00
		25-S (-)			798.9	257.48	1.268	1422.5	1.73665	2.853E+00
225	0	219-T (+)	0	1732333.	162.9	222.70	-0.280	131.4	0.23572	1.640E-02
		334-IB(-)			162.9	222.70	-0.280	131.4	0.23572	1.640E-02
226	0	219-D (+)	0	67480.	163.4	5.14	0.000	131.3	0.23674	1.641E-02
		301-IB(-)			163.4	5.14	0.000	131.3	0.23674	1.641E-02
227	0	175-U (+)	0	213358.	199.9	11.52	0.543	699.3	1.09944	1.831E+01
		132-IB(-)			199.9	11.52	0.543	699.3	1.09944	1.831E+01
301	0	301-U (+)	0	738144.	163.5	5.15	0.000	131.4	0.23689	1.650E-02
		302-IA(-)			163.5	5.15	0.000	131.4	0.23689	1.650E-02
302	0	302-U (+)	0	808027.	163.4	5.15	0.000	131.4	0.23687	1.649E-02
		303-IA(-)			163.4	5.15	0.000	131.4	0.23687	1.649E-02
303	0	303-U (+)	0	877935.	163.4	5.15	0.000	131.4	0.23687	1.648E-02
		31-S (-)			163.4	5.15	0.000	131.4	0.23687	1.648E-02

IP7018950

STREAM PROPERTIES

STRM NO.	STRM TYPE	COMP FRM/TO ID	FLU ID	MASS FLOW (LBM/HR)	TEMP (F)	PRESS (PSIA)	QUAL (HUM) (-)	ENTH (B/LB)	ENTRPY (B/LB-F)	SPEC. VOLUME (FT3/LBM)
305	0	305-U (+)	0	1410589.	213.6	12.96	1.004	1151.8	1.77250	3.054E+01
		46-I (-)			213.6	12.96	1.004	1151.8	1.77250	3.054E+01
306	0	305-B (+)	0	1410166.	213.6	12.96	1.004	1151.8	1.77250	3.054E+01
		47-I (-)			213.6	12.96	1.004	1151.8	1.77250	3.054E+01
307	0	305-C (+)	0	1410166.	213.6	12.96	1.004	1151.8	1.77250	3.054E+01
		11-I (-)			213.6	12.96	1.004	1151.8	1.77250	3.054E+01
319	0	319-T (+)	0	1732333.	163.0	222.70	-0.280	131.5	0.23588	1.640E-02
		334-IC(-)			163.0	222.70	-0.280	131.5	0.23588	1.640E-02
321	0	319-D (+)	0	69909.	163.5	5.15	0.000	131.4	0.23690	1.641E-02
		303-IB(-)			163.5	5.15	0.000	131.4	0.23690	1.641E-02
334	2	334-U (+)	0	5197519.	162.9	222.70	-0.280	131.4	0.23575	1.640E-02
		71-IA(-)			163.0	174.90	-0.248	131.4	0.23598	1.640E-02
401	0	401-U (+)	0	590481.	772.8	1095.84	1.282	1367.0	1.54020	6.026E-01
		168-I (-)			772.8	1095.84	1.282	1367.0	1.54020	6.026E-01
402	0	402-U (+)	0	637793.	630.7	627.83	1.142	1307.2	1.54409	9.381E-01
		167-I (-)			630.7	627.83	1.142	1307.2	1.54409	9.381E-01
403	0	403-U (+)	0	264168.	799.1	259.48	1.268	1422.5	1.73581	2.831E+00
		166-I (-)			799.1	259.48	1.268	1422.5	1.73581	2.831E+00
404	2	8-E (+)	0	167824.	512.0	72.42	1.117	1287.9	1.75271	7.869E+00
		22-S (-)			511.7	71.07	1.117	1287.9	1.75475	8.019E+00
405	2	9-E (+)	0	333755.	412.9	43.98	1.075	1242.3	1.75733	1.165E+01
		21-S (-)			412.5	42.47	1.076	1242.3	1.76112	1.206E+01
406	2	10-E (+)	0	174398.	227.2	12.77	1.011	1158.5	1.78390	3.166E+01
		20-S (-)			226.8	12.24	1.011	1158.5	1.78855	3.304E+01
407	0	401-B (+)	0	0.	772.8	1095.84	1.282	1367.0	1.54020	6.026E-01
		404-IB(-)			772.8	1095.84	1.282	1367.0	1.54020	6.026E-01

IP7018951

STREAM PROPERTIES

STRM NO.	STRM TYPE	COMP FRM/TO ID	FLU ID	MASS FLOW (LBM/HR)	TEMP (F)	PRESS (PSIA)	QUAL (HUM) (-)	ENTH (B/LB)	ENTRPY (B/LB-F)	SPEC. VOLUME (FT3/LBM)
408	0	402-B (+)	0	0.	630.7	627.83	1.142	1307.2	1.54409	9.381E-01
		405-IB(-)			630.7	627.83	1.142	1307.2	1.54409	9.381E-01
409	0	403-B (+)	0	0.	799.1	259.48	1.268	1422.5	1.73581	2.831E+00
		406-IB(-)			799.1	259.48	1.268	1422.5	1.73581	2.831E+00
411	0	6-E (+)	0	264168.	799.1	259.48	1.268	1422.5	1.73581	2.831E+00
		403-I (-)			799.1	259.48	1.268	1422.5	1.73581	2.831E+00
413	0	413-U (+)	0	0.	350.7	135.85	0.000	322.5	0.50421	1.800E-02
		90-IB(-)			350.7	135.85	0.000	322.5	0.50421	1.800E-02
414	0	404-U (+)	0	144358.	199.9	11.52	0.871	1020.2	1.58585	2.935E+01
		405-IA(-)			199.9	11.52	0.871	1020.2	1.58585	2.935E+01
416	0	415-B (+)	0	0.	350.7	135.85	0.000	322.5	0.50421	1.800E-02
		416-I (-)			350.7	135.85	0.000	322.5	0.50421	1.800E-02
417	0	406-U (+)	0	144358.	199.9	11.52	0.871	1020.2	1.58585	2.935E+01
		175-IA(-)			199.9	11.52	0.871	1020.2	1.58585	2.935E+01
418	0	415-U (+)	0	0.	350.7	135.85	0.000	322.5	0.50421	1.800E-02
		147-I (-)			350.7	135.85	0.000	322.5	0.50421	1.800E-02
419	0	405-U (+)	0	144358.	199.9	11.52	0.871	1020.2	1.58585	2.935E+01
		406-IA(-)			199.9	11.52	0.871	1020.2	1.58585	2.935E+01
*420	0	37-UP(+)	0	3554190.	355.5	2988.40	-2.145	332.0	0.50423	1.780E-02
		106-IA(-)			355.5	2988.40	-2.145	332.0	0.50423	1.780E-02
421	0	413-B (+)	0	0.	350.7	135.85	0.000	322.5	0.50421	1.800E-02
		417-I (-)			350.7	135.85	0.000	322.5	0.50421	1.800E-02
450	2	450-U (+)	0	67480.	164.6	5.30	0.997	1129.4	1.83535	6.948E+01
		219-S (-)			163.4	5.14	0.998	1129.4	1.83863	7.150E+01
600	0	150-U (+)	0	6919971.	351.2	312.40	-0.092	323.2	0.50439	1.798E-02
		600-IA(-)			351.2	312.40	-0.092	323.2	0.50439	1.798E-02

IP7018952

STREAM PROPERTIES

STRM NO.	STRM TYPE	COMP FRM/TO ID	FLU ID	MASS FLOW (LBM/HR)	TEMP (F)	PRESS (PSIA)	QUAL (HUM) (-)	ENTH (B/LB)	ENTRPY (B/LB-F)	SPEC. VOLUME (FT3/LBM)
608	0	155-U (+)	0	6969001.	355.5	2988.40	-2.145	332.0	0.50423	1.780E-02
		608-I (-)			355.5	2988.40	-2.145	332.0	0.50423	1.780E-02
609	0	608-B (+)	0	0.	355.5	2988.40	-2.145	332.0	0.50423	1.780E-02
		400-I (-)			355.5	2988.40	-2.145	332.0	0.50423	1.780E-02
610	0	609-B (+)	0	0.	355.5	2988.40	-2.145	332.0	0.50423	1.780E-02
		610-IB(-)			355.5	2988.40	-2.145	332.0	0.50423	1.780E-02
611	0	608-U (+)	0	6969001.	355.5	2988.40	-2.145	332.0	0.50423	1.780E-02
		609-I (-)			355.5	2988.40	-2.145	332.0	0.50423	1.780E-02
612	2	609-U (+)	0	6969001.	355.5	2988.40	-2.145	332.0	0.50423	1.780E-02
		159-I (-)			355.5	2952.39	-1.986	332.0	0.50438	1.781E-02
613	0	610-U (+)	0	5615774.	630.7	627.83	1.142	1307.2	1.54409	9.381E-01
		15-T (-)			630.7	627.83	1.142	1307.2	1.54409	9.381E-01
684	0	3-E (+)	0	590481.	772.8	1095.84	1.282	1367.0	1.54020	6.026E-01
		401-I (-)			772.8	1095.84	1.282	1367.0	1.54020	6.026E-01
777	0	7-U (+)	0	4913196.	627.7	139.58	1.169	1340.7	1.73298	4.551E+00
		127-I (-)			627.7	139.58	1.169	1340.7	1.73298	4.551E+00
781	0	781-U (+)	0	994319.	95.0	0.82	0.133	202.3	0.37169	5.407E+01
		16-D (-)			95.0	0.82	0.133	202.3	0.37169	5.407E+01
999	0	999-U (+)	0	69909.	163.5	5.15	0.966	1097.3	1.78683	6.905E+01
		319-S (-)			163.5	5.15	0.966	1097.3	1.78683	6.905E+01

(+) INDICATES STREAM START CONNECTION, (-) INDICATES STREAM END CONNECTION.

IP7018953

STREAM TRANSPORT PROPERTIES

STRM NO.	SPEC.HT. (BTU/LBM-F)	VISCOSITY (LBM/FT-HR)	THERM COND (BTU/HR-FT-F)
1	6.547E-01	6.857E-02	4.382E-02
	6.547E-01	6.857E-02	4.382E-02
3	6.422E-01	6.031E-02	3.700E-02
	6.422E-01	6.031E-02	3.700E-02
4	6.317E-01	5.161E-02	3.045E-02
	6.317E-01	5.161E-02	3.045E-02
5	5.352E-01	6.796E-02	3.890E-02
	5.352E-01	6.796E-02	3.890E-02
7	5.216E-01	6.141E-02	3.398E-02
	5.216E-01	6.141E-02	3.398E-02
8	4.948E-01	4.555E-02	2.337E-02
	4.948E-01	4.555E-02	2.337E-02
9	4.891E-01	4.014E-02	2.013E-02
	4.891E-01	4.014E-02	2.013E-02
10	4.889E-01	2.979E-02	1.431E-02
	4.889E-01	2.979E-02	1.431E-02
11	N.A.	9.262E-01	2.682E-02
	N.A.	9.262E-01	2.682E-02
12	N.A.	9.297E-01	2.672E-02
	N.A.	9.297E-01	2.672E-02
13	N.A.	1.565E+00	3.715E-02
	N.A.	1.565E+00	3.715E-02
14	N.A.	1.415E+00	3.730E-02
	N.A.	1.415E+00	3.730E-02
15	5.466E-01	7.311E-02	4.300E-02
	5.466E-01	7.311E-02	4.300E-02

IP7018954

STREAM TRANSPORT PROPERTIES

STRM NO.	SPEC.HT. (BTU/LBM-F)	VISCOSITY (LBM/FT-HR)	THERM COND (BTU/HR-FT-F)
16	N.A.	1.741E+00	3.564E-02
	N.A.	1.741E+00	3.564E-02
17	9.979E-01	1.662E+00	3.613E-01
	9.979E-01	1.662E+00	3.613E-01
18	9.982E-01	1.741E+00	3.594E-01
	9.982E-01	1.741E+00	3.594E-01
19	1.000E+00	9.432E-01	3.828E-01
	1.000E+00	9.432E-01	3.828E-01
20	9.981E-01	1.565E+00	3.635E-01
	9.981E-01	1.565E+00	3.635E-01
21	N.A.	9.388E-01	3.824E-01
	N.A.	9.388E-01	3.824E-01
22	9.982E-01	1.415E+00	3.675E-01
	9.982E-01	1.415E+00	3.675E-01
23	9.982E-01	1.898E+00	3.561E-01
	9.982E-01	1.898E+00	3.561E-01
24	1.005E+00	7.289E-01	3.904E-01
	1.005E+00	7.289E-01	3.904E-01
25	1.019E+00	5.049E-01	3.961E-01
	1.019E+00	5.049E-01	3.961E-01
26	1.029E+00	4.392E-01	3.953E-01
	1.030E+00	4.389E-01	3.952E-01
27	1.050E+00	3.696E-01	3.905E-01
	1.050E+00	3.696E-01	3.905E-01
28	5.068E-01	5.203E-02	2.756E-02
	5.068E-01	5.203E-02	2.756E-02

IP7018955

STREAM TRANSPORT PROPERTIES

STRM NO.	SPEC.HT. (BTU/LBM-F)	VISCOSITY (LBM/FT-HR)	THERM COND (BTU/HR-FT-F)
30	9.966E-01	1.391E+00	3.690E-01
	9.974E-01	1.384E+00	3.688E-01
31	9.975E-01	1.300E+00	3.712E-01
	9.975E-01	1.300E+00	3.712E-01
32	1.125E+00	2.631E-01	3.659E-01
	1.125E+00	2.631E-01	3.659E-01
33	1.224E+00	2.277E-01	3.385E-01
	1.224E+00	2.277E-01	3.385E-01
34	1.057E+00	3.248E-01	3.899E-01
	1.057E+00	3.247E-01	3.899E-01
35	1.174E+00	2.498E-01	3.535E-01
	1.174E+00	2.498E-01	3.535E-01
36	1.086E+00	3.069E-01	3.795E-01
	1.086E+00	3.069E-01	3.795E-01
37	1.056E+00	3.544E-01	3.889E-01
	1.056E+00	3.544E-01	3.889E-01
38	1.057E+00	3.248E-01	3.899E-01
	1.057E+00	3.247E-01	3.899E-01
39	1.174E+00	2.498E-01	3.535E-01
	1.174E+00	2.498E-01	3.535E-01
40	1.086E+00	3.069E-01	3.795E-01
	1.086E+00	3.069E-01	3.795E-01
41	1.125E+00	2.631E-01	3.659E-01
	1.125E+00	2.631E-01	3.659E-01
42	1.049E+00	3.698E-01	3.910E-01
	1.049E+00	3.698E-01	3.910E-01

IP7018956

STREAM TRANSPORT PROPERTIES

STRM NO.	SPEC.HT. (BTU/LBM-F)	VISCOSITY (LBM/FT-HR)	THERM COND (BTU/HR-FT-F)
43	1.049E+00	3.698E-01	3.910E-01
	1.049E+00	3.698E-01	3.910E-01
44	1.048E+00	3.718E-01	3.912E-01
	1.048E+00	3.718E-01	3.912E-01
45	1.056E+00	3.544E-01	3.889E-01
	1.056E+00	3.544E-01	3.889E-01
46	1.224E+00	2.277E-01	3.385E-01
	1.224E+00	2.277E-01	3.385E-01
47	6.317E-01	5.161E-02	3.045E-02
	6.317E-01	5.161E-02	3.045E-02
48	5.487E-01	5.244E-02	2.892E-02
	5.487E-01	5.244E-02	2.892E-02
49	9.984E-01	1.297E+00	3.708E-01
	9.984E-01	1.297E+00	3.708E-01
50	1.002E+00	8.860E-01	3.843E-01
	1.002E+00	8.860E-01	3.843E-01
51	1.007E+00	6.859E-01	3.915E-01
	1.007E+00	6.859E-01	3.915E-01
52	1.021E+00	4.921E-01	3.958E-01
	1.021E+00	4.921E-01	3.958E-01
54	6.714E-01	7.477E-02	4.959E-02
	6.714E-01	7.477E-02	4.959E-02
55	1.050E+00	3.696E-01	3.905E-01
	1.050E+00	3.696E-01	3.905E-01
56	1.050E+00	3.696E-01	3.905E-01
	1.050E+00	3.696E-01	3.905E-01

IP7018957

STREAM TRANSPORT PROPERTIES

STRM NO.	SPEC.HT. (BTU/LBM-F)	VISCOSITY (LBM/FT-HR)	THERM COND (BTU/HR-FT-F)
57	1.006E+00	7.152E-01	3.905E-01
	1.006E+00	7.152E-01	3.905E-01
58	9.966E-01	1.414E+00	3.684E-01
	9.966E-01	1.414E+00	3.684E-01
59	6.758E-01	7.509E-02	5.004E-02
	6.758E-01	7.509E-02	5.004E-02
60	9.966E-01	1.414E+00	3.684E-01
	9.966E-01	1.414E+00	3.684E-01
61	9.966E-01	1.414E+00	3.684E-01
	9.966E-01	1.414E+00	3.684E-01
62	9.979E-01	1.620E+00	3.623E-01
	9.979E-01	1.620E+00	3.623E-01
63	N.A.	1.415E+00	2.955E-02
	N.A.	1.415E+00	2.955E-02
64	N.A.	1.741E+00	3.414E-02
	N.A.	1.741E+00	3.414E-02
66	6.309E-01	5.167E-02	3.048E-02
	6.309E-01	5.167E-02	3.048E-02
67	5.466E-01	7.311E-02	4.300E-02
	5.466E-01	7.311E-02	4.300E-02
68	5.352E-01	6.794E-02	3.888E-02
	5.352E-01	6.794E-02	3.888E-02
69	N.A.	9.378E-01	3.825E-01
	N.A.	9.378E-01	3.825E-01
70	4.763E-01	2.748E-02	1.284E-02
	4.763E-01	2.748E-02	1.284E-02

IP7018958

STREAM TRANSPORT PROPERTIES

STRM NO.	SPEC.HT. (BTU/LBM-F)	VISCOSITY (LBM/FT-HR)	THERM COND (BTU/HR-FT-F)
71	1.000E+00	9.418E-01	3.827E-01
	1.000E+00	9.418E-01	3.827E-01
72	1.005E+00	7.289E-01	3.904E-01
	1.005E+00	7.289E-01	3.904E-01
73	1.005E+00	7.289E-01	3.904E-01
	1.005E+00	7.289E-01	3.904E-01
74	1.019E+00	5.049E-01	3.961E-01
	1.019E+00	5.049E-01	3.961E-01
75	1.030E+00	4.389E-01	3.952E-01
	1.030E+00	4.389E-01	3.952E-01
76	9.863E-01	1.743E+00	3.655E-01
	9.863E-01	1.743E+00	3.655E-01
77	N.A.	9.265E-01	2.683E-02
	N.A.	9.265E-01	2.683E-02
79	N.A.	9.255E-01	2.679E-02
	N.A.	9.255E-01	2.679E-02
80	N.A.	9.299E-01	2.673E-02
	N.A.	9.388E-01	2.648E-02
81	N.A.	9.290E-01	2.669E-02
	N.A.	9.378E-01	2.644E-02
82	6.714E-01	7.477E-02	4.959E-02
	6.714E-01	7.477E-02	4.959E-02
83	N.A.	7.152E-01	6.700E-02
	N.A.	7.152E-01	6.700E-02
84	N.A.	7.329E-01	6.220E-02
	N.A.	7.329E-01	6.220E-02

IP7018959

STREAM TRANSPORT PROPERTIES

STRM NO.	SPEC.HT. (BTU/LBM-F)	VISCOSITY (LBM/FT-HR)	THERM COND (BTU/HR-FT-F)
85	5.487E-01	5.244E-02	2.892E-02
	5.487E-01	5.244E-02	2.892E-02
86	6.224E-01	5.575E-02	3.308E-02
	6.224E-01	5.575E-02	3.308E-02
87	N.A.	1.741E+00	3.414E-02
	N.A.	1.741E+00	3.414E-02
88	N.A.	1.741E+00	3.414E-02
	N.A.	1.741E+00	3.414E-02
89	N.A.	1.741E+00	3.414E-02
	N.A.	1.741E+00	3.414E-02
90	N.A.	1.741E+00	3.414E-02
	N.A.	1.741E+00	3.414E-02
93	1.174E+00	2.498E-01	3.535E-01
	1.174E+00	2.498E-01	3.535E-01
94	1.109E+00	2.850E-01	3.721E-01
	1.109E+00	2.850E-01	3.721E-01
95	1.070E+00	3.274E-01	3.844E-01
	1.070E+00	3.274E-01	3.844E-01
96	6.317E-01	5.161E-02	3.045E-02
	6.317E-01	5.161E-02	3.045E-02
97	5.068E-01	5.186E-02	2.746E-02
	5.068E-01	5.186E-02	2.746E-02
98	5.068E-01	5.186E-02	2.746E-02
	5.068E-01	5.186E-02	2.746E-02
99	1.050E+00	3.696E-01	3.905E-01
	1.050E+00	3.696E-01	3.905E-01

IP7018960

STREAM TRANSPORT PROPERTIES

STRM NO.	SPEC.HT. (BTU/LBM-F)	VISCOSITY (LBM/FT-HR)	THERM COND (BTU/HR-FT-F)
100	1.056E+00	3.544E-01	3.889E-01
	1.056E+00	3.544E-01	3.889E-01
101	1.049E+00	3.698E-01	3.910E-01
	1.049E+00	3.698E-01	3.910E-01
102	6.240E-01	5.460E-02	3.235E-02
	6.240E-01	5.460E-02	3.235E-02
104	9.966E-01	1.414E+00	3.684E-01
	9.966E-01	1.414E+00	3.684E-01
105	9.979E-01	1.634E+00	3.620E-01
	9.979E-01	1.634E+00	3.620E-01
106	1.033E+00	3.753E-01	3.983E-01
	1.033E+00	3.753E-01	3.983E-01
107	9.990E-01	2.286E+00	3.487E-01
	9.990E-01	2.286E+00	3.487E-01
108	9.990E-01	2.286E+00	3.487E-01
	9.990E-01	2.286E+00	3.487E-01
109	1.056E+00	3.544E-01	3.889E-01
	1.056E+00	3.544E-01	3.889E-01
110	1.056E+00	3.544E-01	3.889E-01
	1.056E+00	3.544E-01	3.889E-01
111	1.056E+00	3.544E-01	3.889E-01
	1.056E+00	3.544E-01	3.889E-01
114	1.224E+00	2.277E-01	3.385E-01
	1.225E+00	2.276E-01	3.384E-01
115	1.224E+00	2.277E-01	3.385E-01
	1.224E+00	2.277E-01	3.385E-01

IP7018961

STREAM TRANSPORT PROPERTIES

STRM NO.	SPEC.HT. (BTU/LBM-F)	VISCOSITY (LBM/FT-HR)	THERM COND (BTU/HR-FT-F)
116	6.758E-01	7.509E-02	5.004E-02
	6.758E-01	7.509E-02	5.004E-02
117	6.758E-01	7.509E-02	5.004E-02
	6.758E-01	7.509E-02	5.004E-02
118	6.714E-01	7.477E-02	4.959E-02
	6.714E-01	7.477E-02	4.959E-02
119	6.758E-01	7.509E-02	5.004E-02
	6.758E-01	7.509E-02	5.004E-02
120	6.547E-01	6.857E-02	4.382E-02
	6.547E-01	6.857E-02	4.382E-02
121	6.317E-01	5.161E-02	3.045E-02
	6.317E-01	5.161E-02	3.045E-02
122	6.714E-01	7.477E-02	4.959E-02
	6.714E-01	7.477E-02	4.959E-02
123	6.317E-01	5.161E-02	3.045E-02
	6.317E-01	5.161E-02	3.045E-02
124	6.317E-01	5.161E-02	3.045E-02
	6.317E-01	5.161E-02	3.045E-02
125	6.714E-01	7.477E-02	4.959E-02
	6.714E-01	7.477E-02	4.959E-02
126	6.309E-01	5.167E-02	3.048E-02
	6.309E-01	5.167E-02	3.048E-02
127	5.068E-01	5.203E-02	2.756E-02
	5.065E-01	5.202E-02	2.754E-02
128	5.068E-01	5.203E-02	2.756E-02
	5.068E-01	5.203E-02	2.756E-02

IP7018962

STREAM TRANSPORT PROPERTIES

STRM NO.	SPEC.HT. (BTU/LBM-F)	VISCOSITY (LBM/FT-HR)	THERM COND (BTU/HR-FT-F)
129	9.990E-01	2.286E+00	3.487E-01
	9.990E-01	2.286E+00	3.487E-01
130	6.317E-01	5.161E-02	3.045E-02
	6.317E-01	5.161E-02	3.045E-02
131	6.714E-01	7.477E-02	4.959E-02
	6.714E-01	7.477E-02	4.959E-02
132	9.987E-01	1.195E+00	3.739E-01
	9.987E-01	1.195E+00	3.739E-01
133	9.974E-01	1.384E+00	3.688E-01
	9.974E-01	1.384E+00	3.688E-01
134	9.974E-01	1.384E+00	3.688E-01
	9.974E-01	1.384E+00	3.688E-01
135	9.982E-01	1.415E+00	3.675E-01
	9.982E-01	1.415E+00	3.675E-01
136	6.317E-01	5.161E-02	3.045E-02
	6.317E-01	5.161E-02	3.045E-02
137	6.317E-01	5.161E-02	3.045E-02
	6.317E-01	5.161E-02	3.045E-02
138	1.000E+00	9.418E-01	3.827E-01
	1.000E+00	9.418E-01	3.827E-01
139	1.005E+00	7.289E-01	3.904E-01
	1.005E+00	7.289E-01	3.904E-01
140	1.019E+00	5.049E-01	3.961E-01
	1.019E+00	5.049E-01	3.961E-01
141	4.803E-01	5.032E-02	2.585E-02
	4.803E-01	5.032E-02	2.585E-02

IP7018963

STREAM TRANSPORT PROPERTIES

STRM NO.	SPEC.HT. (BTU/LBM-F)	VISCOSITY (LBM/FT-HR)	THERM COND (BTU/HR-FT-F)
142	5.068E-01	5.186E-02	2.746E-02
	5.061E-01	5.184E-02	2.742E-02
143	5.068E-01	5.186E-02	2.746E-02
	5.068E-01	5.186E-02	2.746E-02
144	1.000E+00	9.418E-01	3.827E-01
	1.000E+00	9.418E-01	3.827E-01
145	1.002E+00	8.860E-01	3.843E-01
	1.002E+00	8.860E-01	3.843E-01
146	1.002E+00	8.860E-01	3.843E-01
	N.A.	9.378E-01	3.796E-01
147	1.005E+00	7.289E-01	3.904E-01
	1.005E+00	7.289E-01	3.904E-01
148	5.068E-01	5.203E-02	2.756E-02
	5.068E-01	5.203E-02	2.756E-02
149	1.007E+00	6.859E-01	3.915E-01
	1.007E+00	6.859E-01	3.915E-01
150	1.019E+00	5.049E-01	3.961E-01
	1.019E+00	5.049E-01	3.961E-01
151	5.068E-01	5.186E-02	2.746E-02
	5.066E-01	5.185E-02	2.744E-02
152	5.068E-01	5.186E-02	2.746E-02
	5.066E-01	5.185E-02	2.744E-02
153	9.975E-01	1.300E+00	3.712E-01
	9.975E-01	1.300E+00	3.712E-01
154	9.975E-01	1.300E+00	3.712E-01
	9.975E-01	1.300E+00	3.712E-01

IP7018964

STREAM TRANSPORT PROPERTIES

STRM NO.	SPEC.HT. (BTU/LBM-F)	VISCOSITY (LBM/FT-HR)	THERM COND (BTU/HR-FT-F)
155	9.975E-01	1.300E+00	3.712E-01
	9.975E-01	1.300E+00	3.712E-01
156	6.714E-01	7.477E-02	4.959E-02
	6.714E-01	7.477E-02	4.959E-02
157	6.714E-01	7.477E-02	4.959E-02
	6.714E-01	7.477E-02	4.959E-02
158	1.033E+00	3.751E-01	3.982E-01
	1.033E+00	3.751E-01	3.982E-01
159	1.033E+00	3.751E-01	3.982E-01
	1.033E+00	3.751E-01	3.982E-01
160	1.056E+00	3.544E-01	3.889E-01
	1.056E+00	3.544E-01	3.889E-01
161	1.086E+00	3.069E-01	3.795E-01
	1.086E+00	3.069E-01	3.795E-01
162	1.174E+00	2.498E-01	3.535E-01
	1.174E+00	2.498E-01	3.535E-01
163	1.174E+00	2.498E-01	3.535E-01
	1.174E+00	2.498E-01	3.535E-01
164	1.086E+00	3.069E-01	3.795E-01
	1.086E+00	3.069E-01	3.795E-01
165	1.056E+00	3.544E-01	3.889E-01
	1.056E+00	3.544E-01	3.889E-01
166	5.213E-01	6.172E-02	3.418E-02
	5.211E-01	6.171E-02	3.416E-02
167	6.309E-01	5.167E-02	3.048E-02
	6.278E-01	5.157E-02	3.033E-02

IP7018965

STREAM TRANSPORT PROPERTIES

STRM NO.	SPEC.HT. (BTU/LBM-F)	VISCOSITY (LBM/FT-HR)	THERM COND (BTU/HR-FT-F)
168	6.415E-01	6.028E-02	3.695E-02
	6.400E-01	6.022E-02	3.686E-02
169	6.415E-01	6.028E-02	3.695E-02
	6.400E-01	6.022E-02	3.686E-02
170	6.309E-01	5.167E-02	3.048E-02
	6.278E-01	5.157E-02	3.033E-02
171	6.309E-01	5.167E-02	3.048E-02
	6.309E-01	5.167E-02	3.048E-02
172	1.033E+00	3.751E-01	3.982E-01
	1.033E+00	3.751E-01	3.982E-01
173	1.056E+00	3.544E-01	3.889E-01
	1.056E+00	3.544E-01	3.889E-01
174	1.056E+00	3.544E-01	3.889E-01
	1.056E+00	3.544E-01	3.889E-01
175	1.086E+00	3.069E-01	3.795E-01
	1.086E+00	3.069E-01	3.795E-01
176	1.174E+00	2.498E-01	3.535E-01
	1.174E+00	2.498E-01	3.535E-01
177	1.033E+00	3.751E-01	3.982E-01
	1.033E+00	3.751E-01	3.982E-01
178	1.174E+00	2.498E-01	3.535E-01
	1.174E+00	2.498E-01	3.535E-01
179	1.086E+00	3.069E-01	3.795E-01
	1.086E+00	3.069E-01	3.795E-01
180	6.547E-01	6.857E-02	4.382E-02
	6.547E-01	6.857E-02	4.382E-02

IP7018966

STREAM TRANSPORT PROPERTIES

STRM NO.	SPEC.HT. (BTU/LBM-F)	VISCOSITY (LBM/FT-HR)	THERM COND (BTU/HR-FT-F)
181	5.068E-01	5.203E-02	2.756E-02
	5.068E-01	5.203E-02	2.756E-02
182	5.487E-01	5.244E-02	2.892E-02
	5.487E-01	5.244E-02	2.892E-02
183	6.317E-01	5.161E-02	3.045E-02
	6.317E-01	5.161E-02	3.045E-02
184	6.317E-01	5.161E-02	3.045E-02
	6.317E-01	5.161E-02	3.045E-02
186	6.317E-01	5.161E-02	3.045E-02
	6.317E-01	5.161E-02	3.045E-02
187	1.050E+00	3.696E-01	3.905E-01
	1.050E+00	3.696E-01	3.905E-01
191	1.050E+00	3.696E-01	3.905E-01
	1.050E+00	3.696E-01	3.905E-01
192	1.050E+00	3.696E-01	3.905E-01
	1.050E+00	3.696E-01	3.905E-01
193	1.050E+00	3.696E-01	3.905E-01
	1.050E+00	3.696E-01	3.905E-01
194	1.050E+00	3.696E-01	3.905E-01
	1.050E+00	3.696E-01	3.905E-01
196	1.050E+00	3.696E-01	3.905E-01
	1.050E+00	3.696E-01	3.905E-01
197	1.050E+00	3.696E-01	3.905E-01
	1.050E+00	3.696E-01	3.905E-01
199	1.048E+00	3.718E-01	3.912E-01
	1.048E+00	3.718E-01	3.912E-01

IP7018967

STREAM TRANSPORT PROPERTIES

STRM NO.	SPEC.HT. (BTU/LBM-F)	VISCOSITY (LBM/FT-HR)	THERM COND (BTU/HR-FT-F)
200	1.050E+00	3.696E-01	3.905E-01
	1.050E+00	3.696E-01	3.905E-01
201	1.048E+00	3.718E-01	3.912E-01
	1.048E+00	3.718E-01	3.912E-01
202	1.048E+00	3.718E-01	3.912E-01
	1.048E+00	3.718E-01	3.912E-01
203	1.048E+00	3.718E-01	3.912E-01
	1.048E+00	3.718E-01	3.912E-01
204	1.049E+00	3.698E-01	3.910E-01
	1.049E+00	3.698E-01	3.910E-01
205	1.033E+00	3.753E-01	3.983E-01
	1.033E+00	3.753E-01	3.983E-01
207	1.050E+00	3.696E-01	3.905E-01
	1.050E+00	3.696E-01	3.905E-01
208	N.A.	7.329E-01	6.220E-02
	N.A.	7.329E-01	6.220E-02
210	5.394E-01	5.179E-02	2.826E-02
	5.394E-01	5.179E-02	2.826E-02
211	4.803E-01	5.032E-02	2.585E-02
	4.803E-01	5.032E-02	2.585E-02
212	9.982E-01	1.415E+00	3.675E-01
	9.982E-01	1.415E+00	3.675E-01
213	9.966E-01	1.414E+00	3.684E-01
	9.966E-01	1.414E+00	3.684E-01
214	1.000E+00	2.710E+00	3.421E-01
	1.000E+00	2.710E+00	3.421E-01

IP7018968

STREAM TRANSPORT PROPERTIES

STRM NO.	SPEC.HT. (BTU/LBM-F)	VISCOSITY (LBM/FT-HR)	THERM COND (BTU/HR-FT-F)
215	9.981E-01	1.673E+00	3.609E-01
	9.981E-01	1.673E+00	3.609E-01
218	1.007E+00	6.859E-01	3.915E-01
	1.007E+00	6.859E-01	3.915E-01
219	1.021E+00	4.921E-01	3.958E-01
	1.021E+00	4.921E-01	3.958E-01
220	1.021E+00	4.921E-01	3.958E-01
	1.021E+00	4.921E-01	3.958E-01
222	6.758E-01	7.509E-02	5.004E-02
	6.758E-01	7.509E-02	5.004E-02
223	1.050E+00	3.696E-01	3.905E-01
	1.050E+00	3.696E-01	3.905E-01
224	5.213E-01	6.172E-02	3.418E-02
	5.211E-01	6.171E-02	3.416E-02
225	1.000E+00	9.429E-01	3.828E-01
	1.000E+00	9.429E-01	3.828E-01
226	1.001E+00	9.385E-01	3.824E-01
	1.001E+00	9.385E-01	3.824E-01
227	N.A.	7.329E-01	1.856E-01
	N.A.	7.329E-01	1.856E-01
301	N.A.	9.378E-01	3.825E-01
	N.A.	9.378E-01	3.825E-01
302	N.A.	9.379E-01	3.825E-01
	N.A.	9.379E-01	3.825E-01
303	N.A.	9.379E-01	3.825E-01
	N.A.	9.379E-01	3.825E-01

IP7018969

STREAM TRANSPORT PROPERTIES

STRM NO.	SPEC.HT. (BTU/LBM-F)	VISCOSITY (LBM/FT-HR)	THERM COND (BTU/HR-FT-F)
305	4.889E-01	2.979E-02	1.431E-02
	4.889E-01	2.979E-02	1.431E-02
306	4.889E-01	2.979E-02	1.431E-02
	4.889E-01	2.979E-02	1.431E-02
307	4.889E-01	2.979E-02	1.431E-02
	4.889E-01	2.979E-02	1.431E-02
319	1.000E+00	9.422E-01	3.828E-01
	1.000E+00	9.422E-01	3.828E-01
321	1.001E+00	9.378E-01	3.825E-01
	1.001E+00	9.378E-01	3.825E-01
334	1.000E+00	9.428E-01	3.828E-01
	1.000E+00	9.418E-01	3.827E-01
401	6.415E-01	6.028E-02	3.695E-02
	6.415E-01	6.028E-02	3.695E-02
402	6.309E-01	5.167E-02	3.048E-02
	6.309E-01	5.167E-02	3.048E-02
403	5.213E-01	6.172E-02	3.418E-02
	5.213E-01	6.172E-02	3.418E-02
404	4.945E-01	4.558E-02	2.338E-02
	4.940E-01	4.557E-02	2.336E-02
405	4.888E-01	4.013E-02	2.012E-02
	4.879E-01	4.012E-02	2.009E-02
406	4.834E-01	3.047E-02	1.463E-02
	4.820E-01	3.046E-02	1.460E-02
407	6.415E-01	6.028E-02	3.695E-02
	6.415E-01	6.028E-02	3.695E-02

IP7018970

STREAM TRANSPORT PROPERTIES

STRM NO.	SPEC.HT. (BTU/LBM-F)	VISCOSITY (LBM/FT-HR)	THERM COND (BTU/HR-FT-F)
408	6.309E-01	5.167E-02	3.048E-02
	6.309E-01	5.167E-02	3.048E-02
409	5.213E-01	6.172E-02	3.418E-02
	5.213E-01	6.172E-02	3.418E-02
411	5.213E-01	6.172E-02	3.418E-02
	5.213E-01	6.172E-02	3.418E-02
413	1.050E+00	3.696E-01	3.905E-01
	1.050E+00	3.696E-01	3.905E-01
414	N.A.	7.329E-01	6.220E-02
	N.A.	7.329E-01	6.220E-02
416	1.050E+00	3.696E-01	3.905E-01
	1.050E+00	3.696E-01	3.905E-01
417	N.A.	7.329E-01	6.220E-02
	N.A.	7.329E-01	6.220E-02
418	1.050E+00	3.696E-01	3.905E-01
	1.050E+00	3.696E-01	3.905E-01
419	N.A.	7.329E-01	6.220E-02
	N.A.	7.329E-01	6.220E-02
420	9.872E-01	1.423E+00	3.735E-01
	9.872E-01	1.423E+00	3.735E-01
421	1.050E+00	3.696E-01	3.905E-01
	1.050E+00	3.696E-01	3.905E-01
450	N.A.	9.297E-01	1.375E-02
	N.A.	9.385E-01	1.352E-02
600	1.049E+00	3.698E-01	3.910E-01
	1.049E+00	3.698E-01	3.910E-01

IP7018971

STREAM TRANSPORT PROPERTIES

STRM NO.	SPEC.HT. (BTU/LBM-F)	VISCOSITY (LBM/FT-HR)	THERM COND (BTU/HR-FT-F)
608	1.033E+00	3.753E-01	3.983E-01
	1.033E+00	3.753E-01	3.983E-01
609	1.033E+00	3.753E-01	3.983E-01
	1.033E+00	3.753E-01	3.983E-01
610	1.033E+00	3.753E-01	3.983E-01
	1.033E+00	3.753E-01	3.983E-01
611	1.033E+00	3.753E-01	3.983E-01
	1.033E+00	3.753E-01	3.983E-01
612	1.033E+00	3.753E-01	3.983E-01
	1.033E+00	3.751E-01	3.982E-01
613	6.309E-01	5.167E-02	3.048E-02
	6.309E-01	5.167E-02	3.048E-02
684	6.415E-01	6.028E-02	3.695E-02
	6.415E-01	6.028E-02	3.695E-02
777	5.068E-01	5.203E-02	2.756E-02
	5.068E-01	5.203E-02	2.756E-02
781	N.A.	1.740E+00	3.127E-01
	N.A.	1.740E+00	3.127E-01
999	N.A.	9.378E-01	2.541E-02
	N.A.	9.378E-01	2.541E-02

IP7018972

PROPERTIES FOR ACTIVE STREAMS

STRM	STRM TYPE	FROM /TO	FLU ID	MASS FLOW (LBM/HR)	TEMP (F)	PRESS (PSIA)	QUALITY (R HUM) (-)	ENTHALPY (B/LB)	PDRP/P (-)
26	2	22-T	0	5197519.	303.4	174.9	-0.0823	273.5	0.269
		75-IA			303.6	127.9	-0.0505	273.5	
30	2	30-T	0	5197519.	116.8	410.1	-0.4382	85.8	0.457
		133-I			117.3	222.7	-0.3347	85.8	
32	1	26-T	0	3484500.	488.5	2899.0	-1.2344	474.4	0.002
		28-T			488.4	2893.1	-1.2209	474.4	
34	1	24-T	0	3484500.	404.0	2925.2	-1.6773	382.6	0.004
		26-T			404.0	2914.6	-1.6446	382.5	
38	1	25-T	0	3484500.	404.0	2925.2	-1.6773	382.6	0.004
		27-T			404.0	2914.6	-1.6446	382.5	
41	1	27-T	0	3484500.	488.5	2899.0	-1.2344	474.4	0.002
		29-T			488.4	2893.1	-1.2209	474.4	
50	5	20-D	0	675977.	171.3	12.2	-0.0324	139.3	0.183
		139-I			171.3	10.0	-0.0223	139.3	
67	2	67-U	0	5618278.	1000.0	585.8	1.4274	1518.4	0.000
		5-I			1000.0	585.8	1.4274	1518.4	
80	2	46-E	0	69883.	164.6	5.3	0.9625	1094.3	0.030
		19-S			163.3	5.1	0.9630	1094.3	
81	2	47-E	0	64596.	164.7	5.3	0.9626	1094.5	0.030
		999-IA			163.5	5.2	0.9632	1094.5	
114	1	114-U	0	6969001.	552.4	2877.3	-0.8979	549.2	0.008
		64-I			552.3	2854.6	-0.8601	549.1	
127	2	127-U	0	4906898.	627.7	139.6	1.1697	1340.7	0.012
		8-I			627.5	138.0	1.1698	1340.7	
142	2	142-U	0	230009.	624.8	139.6	1.1680	1339.3	0.027
		23-S			624.4	135.8	1.1682	1339.3	

IP7018973

PROPERTIES FOR ACTIVE STREAMS

STRM	STRM TYPE	FROM /TO	FLU ID	MASS FLOW (LBM/HR)	TEMP (F)	PRESS (PSIA)	QUALITY (R HUM) (-)	ENTHALPY (B/LB)	PDRP/P (-)
151	2	142-B	0	116384.	624.8	139.6	1.1680	1339.3	0.010
		38-IT			624.7	138.2	1.1681	1339.3	
152	2	143-B	0	132125.	624.8	139.6	1.1680	1339.3	0.010
		37-IT			624.7	138.2	1.1681	1339.3	
159	1	159-U	0	6969001.	355.5	2952.4	-1.9868	332.0	0.004
		158-I			355.5	2940.9	-1.9424	331.9	
166	2	166-U	0	132084.	799.1	259.5	1.2682	1422.5	0.008
		24-S			798.9	257.5	1.2681	1422.5	
167	2	167-U	0	318895.	630.7	627.8	1.1429	1307.2	0.022
		26-S			628.9	614.1	1.1420	1307.2	
168	2	168-U	0	295242.	772.8	1095.8	1.2820	1367.0	0.010
		28-S			771.8	1084.4	1.2803	1367.0	
169	2	168-B	0	295239.	772.8	1095.8	1.2820	1367.0	0.010
		29-S			771.8	1084.4	1.2803	1367.0	
170	2	167-B	0	318897.	630.7	627.8	1.1429	1307.2	0.022
		27-S			628.9	614.1	1.1420	1307.2	
224	2	166-B	0	132085.	799.1	259.5	1.2682	1422.5	0.008
		25-S			798.9	257.5	1.2681	1422.5	
334	2	334-U	0	5197519.	162.9	222.7	-0.2801	131.4	0.215
		71-IA			163.0	174.9	-0.2488	131.4	
404	2	8-E	0	167824.	512.0	72.4	1.1174	1287.9	0.019
		22-S			511.7	71.1	1.1177	1287.9	
405	2	9-E	0	333755.	412.9	44.0	1.0759	1242.3	0.034
		21-S			412.5	42.5	1.0765	1242.3	
406	2	10-E	0	174398.	227.2	12.8	1.0111	1158.5	0.042
		20-S			226.8	12.2	1.0119	1158.5	

IP7018974

PROPERTIES FOR ACTIVE STREAMS

STRM	STRM TYPE	FROM /TO	FLU ID	MASS FLOW (LBM/HR)	TEMP (F)	PRESS (PSIA)	QUALITY (R HUM) (-)	ENTHALPY (B/LB)	PDRP/P (-)
612	2	609-U	0	6969001.	355.5	2988.4	-2.1459	332.0	0.012
		159-I			355.5	2952.4	-1.9868	332.0	

IP7018975

COMPARISON OF COMPONENT PORT TEST DATA WITH PEPSE EMPLOYED STREAM PROPERTIES

STREAM NUMBER	STRM TYPE	PEPSE/ TEST	STREAM START/ END	TEMPERATURE (F)	THERMO PRESSURE (PSIA)	QUALITY (-)
15	0	PEPSE	START	1000.0		
		TEST	START	1000.0		
42	0	PEPSE	START		312.40	
		TEST	START		312.40	
43	0	PEPSE	START		312.40	
		TEST	START		312.40	
50	5	PEPSE	END		10.00	
		TEST	END		10.00	
57	0	PEPSE	START			0.000
		TEST	START			0.000
58	0	PEPSE	START		410.10	
		TEST	START		410.10	
60	0	PEPSE	START		410.10	
		TEST	START		410.10	
76	0	PEPSE	START		2988.40	
		TEST	START		2988.40	
146	5	PEPSE	END		5.15	
		TEST	END		10.00	
420	0	PEPSE	START		2988.40	
		TEST	START		2988.40	

IP7018976

DETAILED TURBINE PERFORMANCE TABLE A

COMPONENT	NUM FLOW ENDS	STAGE GRP EFFCY (-)	MECH POWER (MW)	BOWL FLOW COEFF (*)	SHELL FLOW COEFF (*)	EXTRACT STEAM EXTRACTION (L B M / H R)	FLOW LIQUID REMOVED
1/F-GS	1	0.87440	7.66757E+01	81586.	108273.	N.A.	N.A.
3/F-HP	1	0.99981	1.12802E+02	108273.	146119.	590478.	0.
4/	1	0.93584	1.10905E+02	146119.	N.A.	0.	0.
	SECTION POWER 3.00382E+02						
	SECTION EFFICIENCY AT LOAD = 0.94786 (RE THROTTLE INLET = 0.92960)						
5/F-IP	2	0.84444	7.19718E+01	279155.	381433.	0.	0.
6/	2	0.85210	9.05416E+01	381388.	553379.	249968.	0.
					+ TIP LKG	14201.	
7/	2	0.98996	1.24112E+02	553379.	N.A.	458028.	0.
	SECTION POWER 2.86626E+02						
	SECTION EFFICIENCY AT LOAD = 0.92104						
8/F-LP	6	0.76777	7.63350E+01	896238.	1542002.	166941.	0.
					+ TIP LKG	883.	
9/	6	0.91624	6.29963E+01	1542002.	2229260.	333754.	0.
10/	6	0.89056	1.16497E+02	2229260.	2165560.	161535.	0.
					+ TIP LKG	12864.	
46/	2	0.94387	2.37771E+01	2165558.	4717899.	69883.	0.
13/	2	0.66277	2.49044E+01	4717899.	N.A.	0.	0.
	SECTION POWER 3.04509E+02						
	SECTION EFFICIENCY AT LOAD = 0.84474						
47/	2	0.94424	2.36944E+01	2164908.	4720130.	64596.	0.
12/	2	0.58211	2.57677E+01	4720130.	N.A.	0.	0.
	SECTION POWER 4.94621E+01						
	SECTION EFFICIENCY AT LOAD = 0.81414						
11/	2	0.94398	2.37474E+01	2164908.	4755310.	57570.	0.
14/	2	0.72685	2.28809E+01	4755310.	N.A.	0.	0.
	SECTION POWER 4.66283E+01						
	SECTION EFFICIENCY AT LOAD = 0.86660						

IP7018977

COMPONENT NUMBER 1, 1706.612 PSIA
1423.1030 BTU/LBM
1.53967 BTU/LBM-F

IP7018978

DETAILED TURBINE PERFORMANCE TABLE B

COMPONENT	STG GROUP BOWL FLOW (LBM/HR)	PRESSURE BOWL (PSIA)	PRESSURE SHELL (PSIA)	ENTHALPY BOWL (BTU/LBM)	ENTHALPY SHELL (BTU/LBM)	ENTROPY BOWL (BTU/LB-F)	ENTROPY SHELL (BTU/LB-F)	PRESS RATIO (-)	EXTR PRESS DROP (-)	MOIST REMOV EFFCT (-)
1/F-GS	6870090.	2339.83	1706.63	1461.2	1423.1	1.536	1.540	1.37	N.A.	N.A.
3/F-HP	6852975.	1706.63	1101.34	1423.1	1367.0	1.540	1.540	1.55	.00	N.A.
4/	6262494.	1101.34	627.83	1367.0	1306.5	1.540	1.544	1.75	.00	N.A.
5/F-IP	5618278.	585.77	415.83	1518.4	1474.7	1.719	1.725	1.41	.00	N.A.
6/	5635393.	415.83	262.42	1474.5	1419.6	1.725	1.732	1.58	.01	N.A.
7/	5371225.	262.42	139.58	1419.6	1340.7	1.732	1.733	1.88	.00	N.A.
8/F-LP	4906898.	137.97	73.34	1340.7	1287.6	1.734	1.751	1.88	.01	N.A.
9/	4739074.	73.34	44.60	1287.6	1242.3	1.751	1.756	1.64	.01	N.A.
10/	4405319.	44.60	12.96	1242.3	1151.8	1.756	1.773	3.44	.01	N.A.
46/	1410589.	12.96	5.36	1151.8	1094.3	1.773	1.778	2.42	.01	N.A.
13/	1340707.	5.36	1.10	1094.3	1030.9	1.778	1.835	4.87	.00	N.A.
47/	1410166.	12.96	5.37	1151.8	1094.5	1.773	1.778	2.41	.01	N.A.
12/	1345570.	5.37	0.82	1094.5	1029.1	1.778	1.862	6.59	.00	N.A.
11/	1410166.	12.96	5.36	1151.8	1094.3	1.773	1.778	2.42	.01	N.A.
14/	1352596.	5.36	1.47	1094.3	1036.6	1.778	1.816	3.65	.00	N.A.
37/STPM	132125.	138.17	1.47	1339.3	1059.0	1.733	1.855	94.	N.A.	N.A.
38/	116384.	138.17	0.82	1339.3	1033.6	1.733	1.871	169.	N.A.	N.A.

DETAILED TURBINE PERFORMANCE TABLE C

BASE END POINT PRESSURE IS 1.500 IN.HG

COMP ANNULUS VELOCITY EFFICIENCY EXHAUST ENERGY END POINTS

IP7018979

DETAILED TURBINE PERFORMANCE TABLE E
LEAKAGES OF INLET FLOWS

COMPONENT	LEAKAGE TO EXTRACTION (LBM/HR)
6/F-IP	1.42012E+04
8/F-LP	8.83242E+02
10/F-LP	1.28635E+04

IP7018980

DETAILED FEEDWATER HEATER PERFORMANCE OUTPUT - TABLE A
(EXTRACTION FLOW UPDATING BEGINS AT ITERATION 3)

HTR NO.	COMP NO.	COMPONENT DESCRIPTION	HEAT TRANSFER/DEG* CONDENSING SECTION	SUBCOOL/MX SECTION	HEAT# EX PERF INDEX	TERM TEMP DIFF (TTD)	DRAIN COOL DIFF (DCA)	FW OR TUBE PRESS DROP	UPD INT/ (RELAXN) DEMAND REFERENCE
			(B T U / H R - F)		(-)	(F)	(F)	(PSIA)	(-)
1	19	STD. FW. HEATER	7.55E+06	0.00E+00	0.99	0.50	N.A.	0.0	1(0.75) 46
2	20	FWHT. BACK-DRAIN	5.71E+06	1.38E+06	0.97	1.90	8.3	0.0	1(0.75) 10
3	21	FWHT. BACK-DRAIN	3.42E+06	1.08E+06	0.99	0.30	10.0	0.0	1(0.75) 9
4	22	FWHT. BACK-DRAIN	1.78E+06	0.00E+00	0.99	0.50	5.5	0.0	1(0.75) 8
5	23	CONTACT HEATER	N.A.	N.A.	0.75	0.00	N.A.	-7.9	1(0.75) 7
6	24	FW. W/DESUP+COOL	9.09E+05	1.99E+06	0.96	-0.40	8.4	15.6	1(0.75) 6
7	25	FW. W/DESUP+COOL	9.09E+05	1.99E+06	0.96	-0.40	8.4	15.6	1(0.75)166
8	26	FW. W/DESUP+COOL	2.62E+06	1.79E+06	0.98	0.30	9.7	15.7	1(0.75)126
9	27	FW. W/DESUP+COOL	2.62E+06	1.79E+06	0.98	0.30	9.7	15.7	1(0.75)167
10	28	FW. W/DESUP+COOL	1.85E+06	0.00E+00	0.99	2.20	8.5	15.7	1(0.75) 3
11	29	FW. W/DESUP+COOL	1.85E+06	0.00E+00	0.99	2.20	8.5	15.7	1(0.75)168
12	219	STD. FW. HEATER	7.55E+06	0.00E+00	0.99	0.50	N.A.	0.0	1(0.75) 11
13	319	STD. FW. HEATER	7.55E+06	0.00E+00	0.99	0.50	N.A.	0.0	1(0.75) 47
A	16	STD. CONDENSER	9.83E+07	6.32E+06	0.96	7.58	N.A.	0.0	N.A.
B	17	STD. CONDENSER	8.33E+07	0.00E+00	0.97	5.71	N.A.	0.0	N.A.
C	18	STD. CONDENSER	6.71E+07	2.64E+06	0.90	13.28	N.A.	0.0	N.A.

* HEAT TRANSFER/DEG IS SIMILAR TO UA. SEE VOL 1 OUTPUT DESCRIPTION.
\# PERFORMANCE INDEX IS SIMILAR TO EFFECTIVENESS. SEE VOL 1 OUTPUT DESCRIPTION.

IP7018981

DETAILED FEEDWATER HEATER PERFORMANCE OUTPUT - TABLE B

HTR NO.	COMP NO.	COMPONENT DESCRIPTION	HEAT XFER TO FW OR TUBE CND (BTU/HR)	ENTHALPY RISE FW.OR CND T (BTU/LBM)	ENTHALPY DROP EXT STEAM (BTU/LBM)	MASS FLOWS TO HEATER SHELL (LBM/HR)	MASS FLOWS RATE HEATER DRAIN IN (LBM/HR)	MASS FLOWS RATE THRU TUBES (LBM/HR)
1	19	STD. FW. HEATER	6.73E+07	38.8	963.0	69883.	0.	1732853.
2	20	FWHT. BACK-DRAIN	1.98E+08	38.0	1019.2	174398.	501578.	5197519.
3	21	FWHT. BACK-DRAIN	3.66E+08	70.4	1063.1	333755.	167824.	5197519.
4	22	FWHT. BACK-DRAIN	1.75E+08	33.7	1042.7	167824.	0.	5197519.
5	23	CONTACT HEATER	2.55E+08	49.0	1016.7	230009.	1492442.	5197519.
6	24	FW. W/DESUP+COOL	1.76E+08	50.6	1085.9	132084.	614137.	3484500.
7	25	FW. W/DESUP+COOL	1.76E+08	50.6	1085.9	132085.	614136.	3484500.
8	26	FW. W/DESUP+COOL	3.20E+08	91.9	916.9	318895.	295239.	3484500.
9	27	FW. W/DESUP+COOL	3.20E+08	91.9	916.9	318897.	295238.	3484500.
10	28	FW. W/DESUP+COOL	2.61E+08	74.8	882.9	295242.	0.	3484500.
11	29	FW. W/DESUP+COOL	2.61E+08	74.8	882.9	295239.	0.	3484500.
12	219	STD. FW. HEATER	6.73E+07	38.9	998.0	67480.	0.	1732333.
13	319	STD. FW. HEATER	6.75E+07	39.0	965.8	69909.	0.	1732333.
A	16	STD. CONDENSER	1.44E+09	15.0	966.1	1345570.	994319.	95771455.
B	17	STD. CONDENSER	1.28E+09	26.8	958.0	1340707.	0.	47878545.
C	18	STD. CONDENSER	1.36E+09	14.2	953.7	1352596.	3893953.	95771455.

IP7018982

DETAILED HEAT EXCHANGER PERFORMANCE OUTPUT

COMPONENT NUMBER	COMPONENT DESCRIPTION	HEAT EXCH SHELL LOSSES (BTU/HR)	HEAT TO TUBE SIDE FLUID (BTU/HR)	HEAT EXCH PERF INDEX# (-)	PRESSURE DROP TUBE (P S I)	PRESSURE DROP SHELL (P S I)
15	FOSSIL REHEATER	0.0000	1.1865E+09	N.A.	42.065	N.A.
30	GEN. HT. EXCH.	0.0000	8.9355E+06	0.9287	0.000	281.158
31	EXT. DRAIN COOL.	0.0000	3.4533E+07	0.8528	0.000	0.000
32	SPEC. HT. EXCH.	0.0000	0.0000E+00	N.A.	0.000	N.A.
33	SPEC. HT. EXCH.	0.0000	0.0000E+00	N.A.	0.000	N.A.

PERFORMANCE INDEX IS SIMILAR TO EFFECTIVENESS. SEE VOL 1 OUTPUT DESCRIPTION.

IP7018983

DETAILED SOURCE, SINK, AND VALVE PERFORMANCE OUTPUT

COMP NO.	COMPONENT DESCRIPTION	FLOW (LBM/HR)	PRESSURE (PSIA)	TEMP/ QUALITY (F/-)	PRESS. DROP (PSI)	PRESS. DROP FRAC. (-)	POSITION (-)
39	THROTTLE VALVE	6900000.	N.A.	N.A.	72.37	0.03000	OPEN
59	INPUT COMPONENT	6900000.	2412.2	1000.0	N.A.	N.A.	N.A.
60	INFINITE SOURCE	143650000.	50.0	72.3	N.A.	N.A.	N.A.
63	INFINITE SINK	143650000.	50.0	100.8	N.A.	N.A.	N.A.
64	OUTPUT COMPONENT	6969001.	2854.6	552.3	N.A.	N.A.	N.A.
176	INFINITE SOURCE	69000.	15.0	60.0	N.A.	N.A.	N.A.
400	INFINITE SINK	0.	2988.4	355.5	N.A.	N.A.	N.A.
416	INFINITE SINK	0.	135.8	350.7	N.A.	N.A.	N.A.
417	INFINITE SINK	0.	135.8	350.7	N.A.	N.A.	N.A.

DETAILED THROTTLE VALVE PERFORMANCE OUTPUT

THROTTLE FLOW RATIO

COMPONENT NUMBER	EQUIVALENT (-)	ACTUAL (-)	FIRST ADMISSION (-)
39	1.000004	1.000000	1.000000

IP7018984

DETAILED PUMP/COMPRESSOR PERFORMANCE OUTPUT

COMP NO.	COMPONENT DESCRIPTION	PUMP/COMP EFFICIENCY (-)	LINKAGE/ DRIVER EFFIC (-)	PRESSURE RISE (PSI)	ENTH RISE (BTU/LBM)	DRIVER POWER (KW)	GLAND/SEAL LOSSES (BTU/HR)
34	STD. ELE. PUMP	0.8397	1.0000 0.9500	176.55	0.70	7.4717E+02	0.0000
35	STD. ELE. PUMP	0.8397	1.0000 0.9500	176.55	0.70	7.4717E+02	0.0000
37	STM. DRIVEN PUMP	0.8500	1.0000 0.8000	2676.00	10.42	1.0853E+04	0.0000
38	STM. DRIVEN PUMP	0.8500	1.0000 0.8000	2676.00	10.42	1.0427E+04	0.0000
42	STD. ELE. PUMP	1.0000	1.0000 0.9500	408.63	1.22	9.8981E+02	0.0000
43	STD. ELE. PUMP	1.0000	1.0000 0.9500	408.63	1.22	9.8981E+02	0.0000

IP7018985

PERFORMANCE SUMMARY OF GENERATORS

TURBINE CYCLE GENERATOR NUMBER

	1	2	3	4	5	TOTALS
GR. WHEEL POW,BTU/HR	3.370E+09					3.370E+09
AUX. TURB SHAFT LOAD,BTU/HR	0.000E+00					0.000E+00
NET TURB WHEEL POW (GEN W/O LOSSES) BTU/HR	3.370E+09					3.370E+09
GEN. POWER W/O LOSSES, MWE	987.608					987.608
GEAR BOX LOSSES, MWE	0.000					0.000
GEAR BOX OUTPUT POWER, MWE	N.A.					N.A.
GEN. MECHANICAL LOSSES, MWE	4.528					4.528
GEN. ELECTRICAL LOSSES, MWE	9.893					9.893
GEN. TOTAL LOSSES, MWE	14.421					14.421
GEN. + GEAR BOX LOSSES, MWE	14.421					14.421
GROSS GENERATOR POWER, MWE	973.186					973.186

IP7018986

FIRST LAW OF THERMODYNAMICS PERFORMANCE - ENVELOPE 1

TERM

	HEAT SUPPLIED (ALL UNITS ARE BTU/HR) -		
	MAKEUP HEATS BY FLOW ## INTO THE ENVELOPE		
1	AT SOURCE/SINK COMPONENT, USER ID 60	-1.51451E+11	
2	AT SOURCE/SINK COMPONENT, USER ID 176	-7.36021E+07	
3	AT SOURCE/SINK COMPONENT, USER ID 59	2.52809E+09	
	LETDOWN HEATS BY FLOW ## FROM THE ENVELOPE		
4	AT SOURCE/SINK COMPONENT, USER ID 63	-1.47366E+11	
5	AT SOURCE/SINK COMPONENT, USER ID 417	0.00000E+00	
6	AT SOURCE/SINK COMPONENT, USER ID 416	0.00000E+00	
7	AT SOURCE/SINK COMPONENT, USER ID 400	0.00000E+00	
8	AT SOURCE/SINK COMPONENT, USER ID 64	-3.80287E+09	
9	NET HEAT TO ENVELOPE BY FLOW		2.17297E+09
10	CONDENSER COOLING LOAD CREDIT (HEAT IN)	4.08438E+09	
11	FURNACE UNACCOUNTED HEAT LOSSES	0.00000E+00	
12	BOILER REHEAT (TYPE 25 COMPONENTS)	1.18649E+09	
13	UNSPECIFIED HEAT EXCHANGERS (HEAT IN)	0.00000E+00	
14	COMPONENT VESSEL LOSSES	0.00000E+00	
15	PIPE HEAT AND ELEVATION LOSSES	-4.10214E-07	
16	PUMP/COMP/FAN INEFFICIENCY LOSSES	5.92682E+05	
17	PUMP GLANDS AND SEALS LOSSES	0.00000E+00	
18	GENERATOR HYD AND OIL COOLER (HEAT IN)	0.00000E+00	
19	HEAT IN AS ELECTRIC PUMP/COMP/FAN POWER	1.18536E+07	
20	NET POWER SUPPLIED		7.45510E+09
	POWER OUT (ALL UNITS ARE MWE) -		
21	NET TURBINE WHEEL POWER TO GENERATORS	9.87608E+02	
22	APPORTIONED GENERATOR MECHANICAL LOSSES	4.52800E+00	
23	APPORTIONED GENERATOR ELECTRICAL LOSSES	9.89340E+00	
24	GROSS GENERATOR POWER		9.73186E+02
25	ELECTRIC POWER USED FOR PUMP/COMP/FAN	3.47396E+00	
26	APP HOUSE LOAD EXC ELEC PUMP/COMP/FAN	0.00000E+00	
27	NET GENERATOR POWER		9.69712E+02

ENVELOPE PERFORMANCE, EFFICIENCY, - 4.43830E-01

ENVELOPE PERFORMANCE, HEAT RATE, BTU/KW-HR 7.68795E+03

BY DEFAULT, EFFICIENCY IS DEFINED AS (NET GENERATOR POWER / NET POWER SUPPLIED)
BY DEFAULT, HEAT RATE IS DEFINED AS (NET POWER SUPPLIED / NET GENERATOR POWER)

HEAT BY FLOW IS A COMPOSITE TERM, COMPUTED FROM THE EXPRESSION:
FLOW RATE X (ENTHALPY - REFERENCE ENTHALPY + LOWER HEATING VALUE)
THE REFERENCE AND HEATING VALUE TERMS ARE REQUIRED FOR CHEMICALLY REACTING

IP7018987

FIRST LAW OF THERMODYNAMICS PERFORMANCE - SYSTEM

HEAT SUPPLIED (ALL UNITS ARE BTU/HR) -			
BOILER HEAT TO WORKING FLUID	$	6.33095E+09	
1ST BOILER REHEAT (IN, TYPE 25 COMPONENT)		1.18649E+09	
2ND BOILER REHEAT (IN, TYPE 25 COMPONENT)		0.00000E+00	
UNSPECIFIED HEAT EXCHANGERS (HEAT IN)		0.00000E+00	
GROSS HEAT SUPPLIED	$		7.51744E+09
MAKEUP HEAT (BY FLOW ## IN)		-1.51524E+11	
LETDOWN HEAT (BY FLOW ## OUT)		-1.47366E+11	
CONDENSER COOLING LOAD CREDIT (HEAT IN)		4.08438E+09	
COMPONENT VESSEL LOSSES		0.00000E+00	
PIPE HEAT AND ELEVATION LOSSES		-4.10218E-07	
PUMP/COMP/FAN INEFFICIENCY LOSSES		5.92682E+05	
PUMP GLANDS AND SEALS LOSSES		0.00000E+00	
GENERATOR HYD AND OIL COOLER (HEAT IN)		0.00000E+00	
NET HEAT SUPPLIED			7.44325E+09
HEAT IN AS ELECTRIC PUMP/COMP/FAN POWER		1.18536E+07	
NET POWER SUPPLIED			7.45510E+09

POWER OUT (ALL UNITS ARE MWE) -		
NET TURBINE WHEEL POWER TO GENERATORS	987.608	
GENERATOR MECHANICAL LOSSES	4.528	
GENERATOR ELECTRICAL LOSSES	9.893	
GROSS GENERATOR POWER		973.186
ELECTRIC POWER USED FOR PUMP/COMP/FAN	3.474	
HOUSE LOAD POWER, EXCLUDING ELEC PUMP/COMP/FAN	0.000	
(EXCEPTION: INCLUDES COOLING TOWER FAN POWER)		
NET GENERATOR POWER		969.712

SYSTEM PERFORMANCE	THERMAL EFF. (-)	HEAT RATE (BTU/KW-HR)
GROSS ACTUAL TURBINE CYCLE		
(GROSS HEAT SUPPLIED / GROSS GENERATOR POWER)	0.44173	$ 7725.
NET ACTUAL TURBINE CYCLE		
(MOD NET POWER SUPPLIED / NET GENERATOR POWER)	0.44379	7689.
TURBINE CYCLE STEAM RATE, LBM/KW-HR		7.0901

NOTE: MOD NET POWER SUPPLIED = NET POWER SUPPLIED + COMPONENT VESSEL LOSSES + PIPE HEAT AND ELEVATION LOSSES + PUMP INEFFICIENCY LOSSES + PUMP GLANDS AND SEALS LOSSES

$ CAUTION INTERPRETING BOILER HEAT AND GROSS HEAT RATE AND EFFICIENCY

IP7018988

CYCLE SUMMARY

GENERATION (MW)		ENERGY SUMMARY (MBTU/HR) *	
Generator 1	973.186	Input Component	2528.087
		Output Component	-3802.865
TOTAL CYCLE	973.186	Steam Reheat	1186.491
		NET SUPPLIED CYCLE	7517.444

HEAT RATE (BTU/KW-HR) **		MISCELLANEOUS	
Cycle	7725	Backpressure (in.hga)	
Steam Turbine	7725	Cond 1	2.24
		Cond 2	1.66
		Cond 3	2.99

* All terms except "Fuel Input (lhv)" calcd using w*(h-href+hvall). The term, Fuel Input (lhv), is w*hvall, where hvall is lower heating value.

** Heat rates are defined as:

Cycle = {Energy In (Input Component) - Energy Out (Output Component) + Steam Reheat Energy} / Total Cycle Generation (After Gen Losses)

Steam Turbine = {Energy In (Input Component) - Energy Out (Output Component) + Steam Reheat Energy} / Steam Turbine Generation (After Gen Losses)

IP7018989

SECOND LAW OF THERMODYNAMICS PERFORMANCE - SYSTEM
(TTDEAD = 5.00000E+01 DEG F)

SUMMARY FOR CYCLE SUBSYSTEMS

SUBSYSTEM	POTENTIAL FOR POWER MAXIMUM (BTU/HR)	POTENTIAL FOR POWER RELATIVE (-)	IRREVERSIBILITY ACTUAL (BTU/HR)	IRREVERSIBILITY RELATIVE (-)	EFFECT-IVENESS (-)
CLASS 0 - TURBINES	3.665195E+09	1.1989	2.953381E+08	-0.9813	0.9194
CLASS 1 - FW HEATERS	2.002524E+08	0.0655	2.002524E+08	-0.6654	0.8585
CLASS 2 - HEAT EXCHANGERS	-8.117636E+08	-0.2655	-8.117636E+08	2.6973	0.5816
CLASS 3 - VALVES ONLY	1.050014E+07	0.0034	1.050014E+07	-0.0349	
CLASS 4 - PUMPS	1.263546E+07	0.0041	2.448913E+07	-0.0814	
CLASS 5 - MIXERS	-3.422246E+07	-0.0112	-3.422246E+07	0.1137	
CLASS 6 - SPLITTERS	3.620634E+06	0.0012	3.620634E+06	-0.0120	
CLASS 7 - MISC COMPONENTS	0.000000E+00	0.0000	0.000000E+00	0.0000	
STREAMS	1.083099E+07	0.0035	1.083099E+07	-0.0360	
TOTALS	3.057049E+09	1.0000	-3.009547E+08	1.0000	

CYCLE PERFORMANCE

NET AVAILABILITY INFLUX, BTU/HR	3.186108E+09	
CONSTRUCTIVE ADDITIONS, BTU/HR	-1.290590E+08	
MAXIMUM POTENTIAL POWER, BTU/HR		3.057049E+09
TOTAL IRREVERSIBILITY, BTU/HR	(-3.009547E+08)	
NET CYCLE POWER, BTU/HR		3.358004E+09
FIRST LAW RESULT (NET TURBINE WHEEL POWER LESS ELECTRIC POWER USED FOR PUMP/COMP/FAN), BTU/HR		3.358004E+09
CYCLE EFFECTIVENESS		1.0984

IP7018990

SPECIAL OUTPUT TABLE OF SPECIFIED VARIABLES

INDEX	DESCRIPTION	VARIABLE(ID)		VALUE	UNITS
1	GROSS GENERATOR POWER	BKGROS(0)		973.186	MW
2	HP SECTION EFFICIENCY	OPVB (168)	92.59		Not-Specd
3	IP SECTION EFFICIENCY	OPVB (190)	92.75		Not-Specd
4	THROTTLE FLOW	WW (59)		6900000.	LBM/HR
5	1ST STAGE PRESSURE inlet	PP (118)		2339.8	PSIA
6	new 8TH STAGE SHELL PRESSURE	PP (4)		627.8	PSIA
7	IP INLET PRESSURE	PP (67)		585.8	PSIA
8	14TH STAGE SHELL PRESSURE	PP (777)		139.58	PSIA
9	HP TURB PR RATIO	OPVB (170)		2.72	Not-Specd
10	IP TURB PR RATIO	OPVB (171)		4.20	Not-Specd
132	REHEAT PRESSURE DROP	OPVB (173)		670.0000	Not-Specd
135	BOILER BLOWDOWN FLOW	OPVB (20)		6281.	NO-UNITS
136	CYCLE LOSSES	OPVB (24)		0.	Not-Specd
137	CYCLE MAKEUP FLOW	WW (214)		69000.	LBM/HR
138	FLUE GAS REHEAT FLOW	WW (194)		0.	LBM/HR
139	AIR PREHEAT FLOW	WW (192)		0.	LBM/HR
140	BOILER FEED FLOW	WW (114)		6969001.	LBM/HR
141	SH ATTEMP FLOW	WW (609)		0.	LBM/HR
142	RH ATTEMP FLOW	WW (610)		0.	LBM/HR
150	NET TURBINE CYCLE HEAT RATE	OPVB (114)		7714.90	Not-Specd
198	H2 PRESSURE	PPGNH2(1)		63.00	PSIA
199	POWER FACTOR	POWFAC(1)		0.90	NO-UNITS

IP7018991

```
LISTING OF INPUT DATA FOR CASE  2

*
=
*
000200   1  2
                                        *** LINE ABOVE IS A REPLACEMENT LINE. ***
*
*
****************************
*  GENERIC INPUT DATA
****************************
*
*
*
* IPP OPERATING MODEL - TPM TEST -VWO
010200   2  3  1  1  1  0  0.0  0.0  0  0  0  0  0  0  0  0.0
                                        *** LINE ABOVE IS A REPLACEMENT LINE. ***
010201   3  0.0  0.0  0.0  0.0  0.0  0.0
                                        *** LINE ABOVE IS A REPLACEMENT LINE. ***
*
010000  ENGLISH  ENGLISH
                                        *** LINE ABOVE IS A REPLACEMENT LINE. ***
*
*
*
*
* MATERIAL PROPERTIES CALCULATION FLAG
010202   1  0.0
                                        *** LINE ABOVE IS A REPLACEMENT LINE. ***
*
* SPECIFIC HEAT CALCULATION FLAG
012003   0
                                        *** LINE ABOVE IS A REPLACEMENT LINE. ***
*
* RADIATION HEAT TRANSFER FLAGS
012004   0  0  0
                                        *** LINE ABOVE IS A REPLACEMENT LINE. ***
*
* TURBINE PRESSURE CALCULATION FLAGS
039999   0  0  0  0
                                        *** LINE ABOVE IS A REPLACEMENT LINE. ***
*
* TURBINE EXTRACTION STEAM ENTHALPY SWITCHES
039998   0  0
                                        *** LINE ABOVE IS A REPLACEMENT LINE. ***
*
*
012000   150  0.0  0.0  0.0  0.0  0.0  0  0.0  -1  2  10  10  0
                                        *** LINE ABOVE IS A REPLACEMENT LINE. ***
*
* For HP turbine exhaust conditions adjustment
012001   0  0  0  10  0  0  0  0
*
```

IP7018992

```
                                        *** LINE ABOVE IS A REPLACEMENT LINE. ***
700381   0.98  0.8  0.0  0.0  0.0  0.0  0.0  0.0  0  0
                                        *** LINE ABOVE IS A REPLACEMENT LINE. ***
700386   0
                                        *** LINE ABOVE IS A REPLACEMENT LINE. ***
700389   0.0  0  0.0
                                        *** LINE ABOVE IS A REPLACEMENT LINE. ***
710380 0
                                        *** LINE ABOVE IS A REPLACEMENT LINE. ***
*
* TURBINE DRIVEN BF PUMP A
700370   40  143  2911.5  -2.99  0.0  0.0
                                        *** LINE ABOVE IS A REPLACEMENT LINE. ***
700371   0.98  0.8  0.0  0.0  0.0  0.0  0.0  0.0  0  0
                                        *** LINE ABOVE IS A REPLACEMENT LINE. ***
700376   0
                                        *** LINE ABOVE IS A REPLACEMENT LINE. ***
700379   0.0  0  0.0
                                        *** LINE ABOVE IS A REPLACEMENT LINE. ***
710370 0
                                        *** LINE ABOVE IS A REPLACEMENT LINE. ***
*
* EXTRACTION TO A BFPT
701430   61  0.0  140000.
                                        *** LINE ABOVE IS A REPLACEMENT LINE. ***
*
* EXTRACTION TO B BFPT
701420   61  0.0  140000.
                                        *** LINE ABOVE IS A REPLACEMENT LINE. ***
*
* SPLITTER FOR BFPS
701530   63  0.0  0.5
                                        *** LINE ABOVE IS A REPLACEMENT LINE. ***
*
******************************
*  SPECIAL FEATURES
******************************
*
*
*
*
*
* Contol to Throttle Valve Outlet Pressure
840100 PDRPL  39  0.0  0.0  0.0 OPVB  200
840101   -1. PP  54
840105    0  0
840106    0  0.0
840109    0.005  0.7
*
*
*
* TEST BLOWDOWN FRAC
870210   0.0
```

IP7018993

```
870400   0.0
870408
*
* TEST APH RETURN TEMP
870410   100.
870418
*
* TEST SH SPRAY FLOW FRACTION
870500   0.0
870508
*
* TEST CYCLE LOSS FRACTION
870600   0.0
870608
*
* H2 PRESS GAIN MULTIPLIER
871920   17.3
871928
*
* Ist stage Inlet Pressure
872000   1930.
872008
*
*
*
*
*
* CYCLE LOSSES CALC
880230    WW  421   ADD   WW  416   OPVB  24
                                     *** LINE ABOVE IS A REPLACEMENT LINE. ***
880231    0.0  0.0  0.0
                                     *** LINE ABOVE IS A REPLACEMENT LINE. ***
880235    0  0  0.0
                                     *** LINE ABOVE IS A REPLACEMENT LINE. ***
*
* TEST FGR RETURN TEMP
880330    OPVB  32   EQL   TTTORH  33
880331    0.0  0.0  0.0
880335    0  0  0.0
*
* TEST APH RETURN TEMP
880420    OPVB  41   EQL   TTTORH  32
880421    0.0  0.0  0.0
880425    0  0  0.0
*
* HP exhaust mixer outlet enthalpy
880690    PP  66   PTH   OPVB  68   OPVB  69
880691    1.  1.  1.
880695    1  -1  0.0
*
* HP EXHAUST CONDITIONS ADJUSTMENT
880700    WW  66   MUL   OPVB  69   OPVB  70
880701    0.0  0.0  0.0
880705    0  1  0.0
```

IP7018994

```
880735    0  -1  0.0
*
*      "
880740    PP  4   PHT   OPVB  73   TEXIP  4
880741    0.0  0.0  0.0
880745    0  -1  0.0
*
* HP TURB ISEN END PT ENTHALPY
881600    PP  4   PSH   SS  59   OPVB  165
                                     *** LINE ABOVE IS A REPLACEMENT LINE. ***
881601    0.0  0.0  0.0
                                     *** LINE ABOVE IS A REPLACEMENT LINE. ***
881605    0  0  0.0
                                     *** LINE ABOVE IS A REPLACEMENT LINE. ***
*
* AVAIL ENERGY
881610    HH  59   SUB   OPVB  165   OPVB  166
                                     *** LINE ABOVE IS A REPLACEMENT LINE. ***
881611    0.0  0.0  0.0
                                     *** LINE ABOVE IS A REPLACEMENT LINE. ***
881615    0  0  0.0
                                     *** LINE ABOVE IS A REPLACEMENT LINE. ***
*
* USED ENERGY
881620    HH  59   SUB   HH  66   OPVB  167
                                     *** LINE ABOVE IS A REPLACEMENT LINE. ***
881621    0.0  0.0  0.0
                                     *** LINE ABOVE IS A REPLACEMENT LINE. ***
881625    0  0  0.0
                                     *** LINE ABOVE IS A REPLACEMENT LINE. ***
*
* HP TURB EFFICIENCY
881630    OPVB  167   DIV   OPVB  166   OPVB  168
                                     *** LINE ABOVE IS A REPLACEMENT LINE. ***
881631    0.0  0.0  100.
                                     *** LINE ABOVE IS A REPLACEMENT LINE. ***
881635    0  0  0.0
                                     *** LINE ABOVE IS A REPLACEMENT LINE. ***
*
* HP TURB PR RATIO
881700    PP  1   DIV   PP  4   OPVB  170
                                     *** LINE ABOVE IS A REPLACEMENT LINE. ***
881701    0.0  0.0  0.0
                                     *** LINE ABOVE IS A REPLACEMENT LINE. ***
881705    0  0  0.0
                                     *** LINE ABOVE IS A REPLACEMENT LINE. ***
*
* IP TURB PR RATIO
881710    PP  67   DIV   PP  777   OPVB  171
                                     *** LINE ABOVE IS A REPLACEMENT LINE. ***
881711    0.0  0.0  0.0
                                     *** LINE ABOVE IS A REPLACEMENT LINE. ***
881715    0  0  0.0
                                     *** LINE ABOVE IS A REPLACEMENT LINE. ***
```

IP7018995

```
881735    0  0  0.0
                                        *** LINE ABOVE IS A REPLACEMENT LINE. ***
*
* H HRH IP INLET
881800    HH  -67   MUL   WW  67   OPVB  180
                                        *** LINE ABOVE IS A REPLACEMENT LINE. ***
881801    0.0  0.0  0.0
                                        *** LINE ABOVE IS A REPLACEMENT LINE. ***
881805    0  0  0.0
                                        *** LINE ABOVE IS A REPLACEMENT LINE. ***
*
* H CS IP INLET
881810    HH  180   MUL   WW  180   OPVB  181
                                        *** LINE ABOVE IS A REPLACEMENT LINE. ***
881811    0.0  0.0  0.0
                                        *** LINE ABOVE IS A REPLACEMENT LINE. ***
881815    0  0  0.0
                                        *** LINE ABOVE IS A REPLACEMENT LINE. ***
*
* H NUMERATOR IP INLET
881820    OPVB  180   ADD   OPVB  181   OPVB  182
                                        *** LINE ABOVE IS A REPLACEMENT LINE. ***
881821    0.0  0.0  0.0
                                        *** LINE ABOVE IS A REPLACEMENT LINE. ***
881825    0  0  0.0
                                        *** LINE ABOVE IS A REPLACEMENT LINE. ***
*
* FLOW IP MIX
881830    WW  67   ADD   WW  180   OPVB  183
                                        *** LINE ABOVE IS A REPLACEMENT LINE. ***
881831    0.0  0.0  0.0
                                        *** LINE ABOVE IS A REPLACEMENT LINE. ***
881835    0  0  0.0
                                        *** LINE ABOVE IS A REPLACEMENT LINE. ***
*
* H MIX IP INLET
881840    OPVB  182   DIV   OPVB  183   OPVB  184
                                        *** LINE ABOVE IS A REPLACEMENT LINE. ***
881841    0.0  0.0  0.0
                                        *** LINE ABOVE IS A REPLACEMENT LINE. ***
881845    0  0  0.0
                                        *** LINE ABOVE IS A REPLACEMENT LINE. ***
*
* S MIX IP INLET
881850    PP  -67   PHS   OPVB  184   OPVB  185
                                        *** LINE ABOVE IS A REPLACEMENT LINE. ***
881851    0.0  0.0  0.0
                                        *** LINE ABOVE IS A REPLACEMENT LINE. ***
881855    0  0  0.0
                                        *** LINE ABOVE IS A REPLACEMENT LINE. ***
*
* H ISEN IP
881860    PP  777   PSH   OPVB  185   OPVB  186
                                        *** LINE ABOVE IS A REPLACEMENT LINE. ***
```

IP7018996

```
881890    OPVB  184   SUB   HH  97   OPVB  189
                                     *** LINE ABOVE IS A REPLACEMENT LINE. ***
881891    0.0  0.0  0.0
                                     *** LINE ABOVE IS A REPLACEMENT LINE. ***
881895    0  0  0.0
                                     *** LINE ABOVE IS A REPLACEMENT LINE. ***
*
* IP EFFICIENCY
881900    OPVB  189   DIV   OPVB  187   OPVB  190
                                     *** LINE ABOVE IS A REPLACEMENT LINE. ***
881901    0.0  0.0  100.
                                     *** LINE ABOVE IS A REPLACEMENT LINE. ***
881905    0  0  0.0
                                     *** LINE ABOVE IS A REPLACEMENT LINE. ***
*
*
******************************
*   SPECIAL OPTIONS
******************************
*
*
*
850000    2
                                     *** LINE ABOVE IS A REPLACEMENT LINE. ***
*
* OPTION 2
850002    11  46  47  0  0
                                     *** LINE ABOVE IS A REPLACEMENT LINE. ***
*
* OPTION 2 INTERVAL AND RELAXATION
850200   1  1.
                                     *** LINE ABOVE IS A REPLACEMENT LINE. ***
*
850008
*
* INDIVIDUAL SPECIAL OPTION DELETION
850009
*
*
*
891220 "GROSS GENERATOR POWER"
891221 BKGROS  0 0.0   U
891223
891229 'F15.3'
*
891230 "HP SECTION EFFICIENCY"
891231 OPVB  168 0.0   U
891232   0  'USER1'  N  0.0  0.0
   +  0.0  0.0  0.0  0  0  0
891233
891238  DELETE
891239 'F6.2'
*
891240 "IP SECTION EFFICIENCY"
```

IP7018997

```
891269 'F15.1'
*
891270 "7TH STAGE SHELL PRESSURE"
891271 PP  4 0.0   U
891273
891279 'F15.1'
*
891280 "IP INLET PRESSURE"
891281 PP  67 0.0   U
891283
891289 'F15.1'
*
891290 "14TH STAGE SHELL PRESSURE"
891291 PP  777 0.0   U
891293
891299 'F15.2'
*
891300 "HP TURB PR RATIO"
891301 OPVB  170 0.0   U
891303
891309 'F15.2'
*
891310 "IP TURB PR RATIO"
891311 OPVB  171 0.0   U
891313
891319 'F15.2'
*
891320 "REHEAT PRESSURE DROP"
                                    *** LINE ABOVE IS A REPLACEMENT LINE. ***
891321 OPVB  173 0.0   U
                                    *** LINE ABOVE IS A REPLACEMENT LINE. ***
891323   100. "NULL"   0.0  0  0
                                    *** LINE ABOVE IS A REPLACEMENT LINE. ***
891329 'F15.4'
                                    *** LINE ABOVE IS A REPLACEMENT LINE. ***
*
891980 "H2 PRESSURE"
                                    *** LINE ABOVE IS A REPLACEMENT LINE. ***
891981 PPGNH2  1 0.0   U
                                    *** LINE ABOVE IS A REPLACEMENT LINE. ***
891983
891989 'F15.2'
                                    *** LINE ABOVE IS A REPLACEMENT LINE. ***
*
891990 "POWER FACTOR"
                                    *** LINE ABOVE IS A REPLACEMENT LINE. ***
891991 POWFAC  1 0.0   U
                                    *** LINE ABOVE IS A REPLACEMENT LINE. ***
891993
891999 'F15.2'
                                    *** LINE ABOVE IS A REPLACEMENT LINE. ***
*
893000 "Throttle Valve Press Drop"
893001 PPRPL  30 0.0   U
```

IP7018998

```
*
*
*
* For IP turbine exhaust conditions adjustment 12 iterations
012001   0  0  0  12  0  0  0  0
                                        *** LINE ABOVE IS A REPLACEMENT LINE. ***
*
****************************
*  STREAMS
****************************
*
*
*
****************************
*  COMPONENTS
****************************
*
*
*
****************************
*  SPECIAL FEATURES
****************************
*
*
*
*
*
*
*
*
*
*
*
* IP EXHAUST CONDITIONS ADJUSTMENT
880760    WW  97   MUL   HH  28   OPVB  76
880761    0.0  0.0  0.0
880765    20  0  0.0
*
*      "
880770    WW  96   MUL   HH  96   OPVB  77
880771    0.0  0.0  0.0
880775    20  0  0.0
*
*      "
880780    OPVB  76   SUB   OPVB  77   OPVB  78
880781    0.0  0.0  0.0
880785    20  0  0.0
*
*      "
880790    OPVB  78   DIV   WW  28   OPVB  79
880791    0.0  0.0  0.0
880795    20  0  0.0
*
*      "
```

IP7018999

```
*
= U2 Test Data Reduction
*
* TURBINE SOLUTION METHOD CARDS
850611    1  1
850612    3  7
850613    4  6
850614    6  7
850615    7  6
850616    8  7
850617    9  7
850618    10  7
850619    11  5
850620    46  5
850621    47  5
850622    14  5
850623    13  5
850624    12  5
* TEST DATA
*
890010  "MAIN STEAM PRESSURE"
                                    *** LINE ABOVE IS A REPLACEMENT LINE. ***
890011  PPVSC  59  2285.839905     I
                                    *** LINE ABOVE IS A REPLACEMENT LINE. ***
890013   1. "NULL"   0.0
890020  "MAIN STEAM TEMPERATURE"
                                    *** LINE ABOVE IS A REPLACEMENT LINE. ***
890021  TTVSC  59  1001.206941     I
                                    *** LINE ABOVE IS A REPLACEMENT LINE. ***
890023   1. "NULL"   0.0
890030  "MAIN STEAM FLOW                          "
                                    *** LINE ABOVE IS A REPLACEMENT LINE. ***
890031  WWVSC  59  6732560.447     I
                                    *** LINE ABOVE IS A REPLACEMENT LINE. ***
890033   1. "NULL"   0.0
890040  "1ST STAGE INLET PRESS"
                                    *** LINE ABOVE IS A REPLACEMENT LINE. ***
890041  OPVB  200  2223.079531     I
                                    *** LINE ABOVE IS A REPLACEMENT LINE. ***
890043   0.0 "NULL"   0.0
890050  "EXTRACTION PRESSURE HP HTR 8"
                                    *** LINE ABOVE IS A REPLACEMENT LINE. ***
890051  PSIPV  3  1043.17349     I
                                    *** LINE ABOVE IS A REPLACEMENT LINE. ***
890053   1.00947 "NULL"   0.0
890060  "HP SECTION EXHAUST PRESSURE"
                                    *** LINE ABOVE IS A REPLACEMENT LINE. ***
890061  PSIPV  4  612.3365911     I
                                    *** LINE ABOVE IS A REPLACEMENT LINE. ***
890063   0.0 "NULL"   0.0
890070  "EXTRACTION PRESSURE HP HTR 6"
                                    *** LINE ABOVE IS A REPLACEMENT LINE. ***
890071  PSIPV  6  253.4280282     I
                                    *** LINE ABOVE IS A REPLACEMENT LINE. ***
```

IP7019000

*** LINE ABOVE IS A REPLACEMENT LINE. ***

```
890103   1.02813 "NULL"   0.0
890110  "EXTRACTION PRESSURE LP HTR 2"
890111  PSIPV  10  12.73409437     I
890113   1.04014 "NULL"   0.0
890120  "EXTRACTION PRESSURE LP HTR 1A"
890121  PSIPV  11  5.769861399     I
890123   1.02263 "NULL"   0.0
890130  "EXTRACTION PRESSURE LP HTR 1B"
890131  PSIPV  46  5.506939552     I
890133   1.01852 "NULL"   0.0
890140  "EXTRACTION PRESSURE LP HTR 1C"
890141  PSIPV  47  5.663094272     I
890143   1.02053 "NULL"   0.0
890160  "EXTRACTION TEMP HP HTR 8"
890161  TEXIP  3  784.6510811     I
890163   1. "NULL"   0.9
890170  "HP SECTION EXHAUST TEMP"
890171  OPVB  68  641.9955664     I
890173   1. "NULL"   0.0
890180  "EXTRACTION TEMP HP HTR 6"
890181  TEXIP  6  812.8048386     I
890183   0.0 "NULL"   -14.9
890190  "IP SECTION EXHAUST TEMP"
890191  TEXIP  7  638.2140757     I
890193   1. "NULL"   0.0
890200  "EXTRACTION TEMP LP HTR 4"
890201  TEXIP  8  530.67599     I
890203   1. "NULL"   -25.2
890210  "EXTRACTION TEMP LP HTR 3"
890211  TEXIP  9  438.4209113     I
890213   1. "NULL"   -10.
890220  "EXTRACTION TEMP LP HTR 2"
890221  TEXIP  10  253.5900421     I
890223   1. "NULL"   -22.8
890240  "REHEATER TEMPERATURE"
890241  TTTORH  15  1012.262101     I
890243   1. "NULL"   0.0
890250  "HOT REHEAT PRESSURE"
890251  PPTORH  15  570.8479708     I
890253   1. "NULL"   0.0
890260  "CONDENSER A SHELL PRESSURE"
890261  PPSH  18  -3.23122272     I
890263   1. "NULL"   0.0
890270  "CONDENSER B SHELL PRESSURE"
890271  PPSH  17  -2.612027513     I
890273   1. "NULL"   0.0
890280  "CONDENSER C SHELL PRESSURE"
890281  PPSH  16  -2.342475628     I
890283   1. "NULL"   0.0
890290  "HP HTR 8A SHELL INLET PR"
890291  PPSI  28  1042.865225     I
890293   1. "NULL"   0.0
890300  "HP HTR 8B SHELL INLET PR"
```

IP7019001

```
890350  "DA SHELL INLET PRESSURE"
890351  PPSI  23  133.8379878     I
890353   1. "NULL"   0.0
890360  "LP HTR 4 SHELL INLET PR"
890361  PPSI  22  67.00070483     I
890363   1. "NULL"   0.0
890370  "LP HTR 3 SHELL INLET PR"
890371  PPSI  21  42.72133413     I
890373   1. "NULL"   0.0
890380  "LP HTR 2 SHELL INLET PR"
890381  PPSI  20  12.73409437     I
890383   1. "NULL"   0.0
890390  "LP HTR 1A SHELL INLET PR"
890391  PPSI  219  5.599073502     I
890393   1. "NULL"   0.0
890400  "LP HTR 1B SHELL INLET PR"
890401  PPSI  19  5.343934141     I
890403   1. "NULL"   0.0
890410  "LP HTR 1C SHELL INLET PR"
890411  PPSI  319  5.495466681     I
890413   1. "NULL"   0.0
890430  "HP HTR 8A FW OUTLET TEMP"
890431  TTFO  28  549.9555256     I
890433   1. "NULL"   0.0
890440  "HP HTR 8B FW OUTLET TEMP"
890441  TTFO  29  548.6799664     I
890443   1. "NULL"   0.0
890450  "HP HTR 7A FW OUTLET TEMP"
890451  TTFO  26  487.461557     I
890453   1. "NULL"   0.0
890460  "HP HTR 7B FW OUTLET TEMP"
890461  TTFO  27  485.5591147     I
890463   1. "NULL"   0.0
890470  "HP HTR 6A FW OUTLET TEMP"
890471  TTFO  24  404.1838261     I
890473   1. "NULL"   0.0
890480  "HP HTR 6B FW OUTLET TEMP"
890481  TTFO  25  404.1003914     I
890483   1. "NULL"   0.0
890490  "DA FW OUTLET TEMP"
890491  TTFO  23  350.3526346     I
890493   1. "NULL"   0.0
890500  "LP HTR 4 FW OUTLET TEMP"
890501  TTFO  22  303.6265964     I
890503   1. "NULL"   0.0
890510  "LP HTR 3 FW OUTLET TEMP"
890511  TTFO  21  272.2296097     I
890513   1. "NULL"   0.0
890520  "LP HTR 2 FW OUTLET TEMP"
890521  TTFO  20  202.9215063     I
890523   1. "NULL"   0.0
890530  "LP HTR 1A FW OUTLET TEMP"
890531  TTFO  219  164.0184415     I
890533   1. "NULL"   0.0
```

IP7019002

```
890593   1. "NULL"    0.0
890600  "HP HTR 7B DRAIN OUTLET TEMP"
890601  TTDO  27  411.7444594     I
890603   1. "NULL"    0.0
890610  "HP HTR 6A DRAIN OUTLET TEMP"
890611  TTDO  24  360.7820495     I
890613   1. "NULL"    0.0
890620  "HP HTR 6B DRAIN OUTLET TEMP"
890621  TTDO  25  365.0493479     I
890623   1. "NULL"    0.0
890630  "LP HTR 4 DRAIN OUTLET TEMP"
890631  TTDO  22  281.6153268     I
890633   1. "NULL"    0.0
890640  "LP HTR 3 DRAIN OUTLET TEMP"
890641  TTDO  21  232.0403132     I
890643   1. "NULL"    0.0
890650  "LP HTR 2 DRAIN OUTLET TEMP"
890651  TTDO  20  173.4009755     I
890653   1. "NULL"    0.0
890660  "LP HTR 1A DRAIN OUTLET TEMP"
890661  TTDO  219  164.7544929     I
890663   1. "NULL"    0.0
890670  "LP HTR 1B DRAIN OUTLET TEMP"
890671  TTDO  19  162.8114107     I
890673   1. "NULL"    0.0
890680  "LP HTR 1C DRAIN OUTLET TEMP"
890681  TTDO  319  163.9000029     I
890683   1. "NULL"    0.0
890700  "BBFP A DISCHARGE PRESSURE"
890701  PMPDIS  34  296.1446117     I
890703   1. "NULL"    0.0
890710  "BBFP B DISCHARGE PRESSURE"
890711  PMPDIS  35  296.1446117     I
890713   1. "NULL"    0.0
890720  "CONDENSATE PUMP A DISCHARGE PRESSURE"
890721  PMPDIS  42  434.9402305     I
890723   1. "NULL"    0.0
890730  "CONDENSATE PUMP B DISCHARGE PRESSURE"
890731  PMPDIS  43  434.9402305     I
890733   1. "NULL"    0.0
890750  "BFPT A EXHAUST PRESSURE"
890751  PPPTGX  37  1.784929704     I
890753   1. "NULL"    0.0
890760  "BFPT A POWER DELIVERED BY SHAFT"
890761  BKPMOT  37  0.0     I
890763   1. "NULL"    0.0
890770  "MAIN BFP 1A DISCHARGE PRESS"
890771  PMPDIS  37  2827.740156     I
890773   1. "NULL"    0.0
890780  "BFPT A EXTRACTION"
890781  WWFIXB  143  122602.7889     I
890783   1. "NULL"    0.0
890790  "BFPT B EXHAUST PRESSURE"
890791  PPPTGX  38  1.35428008     I
```

IP7019003

```
890841  PPGNH2  1  64.19623844     I
890843   1. "NULL"   0.0
890850  "GENERATOR POWER FACTOR"
890851  POWFAC  1  0.98955301     I
890853   1. "NULL"   0.0
890860  "COND A CW INLET TEMP"
890861  TTFI  18  94.58992881     I
890863   1. "NULL"   0.0
890870  "COND B CW INLET TEMP"
890871  TTFI  17  80.87700067     I
890873   1. "NULL"   0.0
890880  "COND C CW INLET TEMP"
890881  TTFI  16  81.00651623     I
890883   1. "NULL"   0.0
890890  "BOILER BLOWDOWN"
890891  OPVB  20  17220.     I
890893   0.0 "NULL"   0.0
890900  "PRESSURE EXHAUST LPA"
890901  PSIPV  12  1.587015039     I
890903   1. "NULL"   0.0
890910  "PRESSURE EXHAUST LPB"
890911  PSIPV  13  1.282897313     I
890913   1. "NULL"   0.0
890920  "PRESSURE EXHAUST LPC"
890921  PSIPV  14  1.150506905     I
890923   1. "NULL"   0.0
890930  "APH RETURN TO COND TEMP"
890931  OPVB  41  78.19043086     I
890933   0.0 "NULL"   0.0
890940  "ENTHALPY LPA EXHAUST"
890941  HSIPV  12  994.     I
890943   1. "NULL"   0.0
890950  "ENTHALPY LPB EXHAUST"
890951  HSIPV  13  994.     I
890953   1. "NULL"   0.0
890960  "ENTHALPY LPC EXHAUST"
890961  HSIPV  14  994.     I
890963   1. "NULL"   0.0
890970  "MAIN STEAM ATTEMPERATION"
890971  WWFIXB  608  378982.2085     I
890973   0.0 "NULL"   0.0
890980  "ENTHALPY 18TH STG EXHAUST"
890981  HSIPV  10  1151.4     I
890983   1. "NULL"   0.0
890990  "ENTHALPY 19TH STG A EXHAUST"
890991  HSIPV  11  1094.     I
890993   1. "NULL"   0.0
891000  "ENTHALPY 19TH STG B EXHAUST"
891001  HSIPV  46  1094.     I
891003   1. "NULL"   0.0
891010  "ENTHALPY 19TH STG C EXHAUST"
891011  HSIPV  47  1094.     I
891013   1. "NULL"   0.0
891020  "APH EXTRACTION WATER FLOW"
```

IP7019004

```
891070  "ENTHALPY EXT TO HP HTR #8"
891071  HEXTLK  3  1377.286987     I
891073   0.0 "NULL"   0.0
891080  "ENTHALPY EXT TO HP HTR #6"
891081  HEXTLK  6  1429.925049     I
891083   0.0 "NULL"   0.0
891090  "ENTHALPY EXT TO LP HTR #4"
891091  HEXTLK  8  1297.617554     I
891093   0.0 "NULL"   0.0
891100  "ENTHALPY EXT TO LP HTR #3"
891101  HEXTLK  9  1254.90332     I
891103   0.0 "NULL"   0.0
891110  "ENTHALPY EXT TO LP HTR #2"
891111  HEXTLK  10  1171.141113     I
891113   0.0 "NULL"   0.0
891120  "BOILER BLOWDOWN (FRAC)"
891121  OPVB  21  0.0025577193     I
891123   1. "NULL"   0.0
891130  "FGR RETURN TEMP"
891131  OPVB  32  100.     I
891133   1. "NULL"   0.0
891140  "APH EXT FLOW FRAC"
891141  OPVB  40  0.0     I
891143   1. "NULL"   0.0
891150  "FGR EXT FLOW FRACTION"
891151  OPVB  30  0.0     I
891153   1. "NULL"   0.0
891160  "MAIN STEAM ATTEMP FRAC"
891161  OPVB  50  0.056665376     I
891163   1. "NULL"   0.0
891170  "CGR LOSS FLOW FRACTION"
891171  OPVB  60  0.0     I
891173   1. "NULL"   0.0
891180  "APH LEAKAGE"
891181  WWFIXB  413  0.0     I
891183   0.0 "NULL"   0.0
891190  "APH LOSS FLOW FRACTION"
891191  OPVB  61  0.0     I
891193   0.0 "NULL"   0.0
*
*
/
```

IP7019005

INPUT SCHEDULE NUMBER 1 TABLE OF VALUES

EXHAUST LOSS VS. ANNULUS VELOCITY

UNIVARIATE TABLE OF Y VERSUS X

VALUES OF X

2.350E+02	2.750E+02	3.000E+02	3.200E+02	3.550E+02	3.810E+02	4.080E+02
4.400E+02	4.820E+02	5.050E+02	5.350E+02	5.700E+02	6.000E+02	6.300E+02
6.600E+02	7.000E+02	7.550E+02	8.780E+02	9.550E+02	1.210E+03	

VALUES OF Y

4.750E+01	3.800E+01	3.300E+01	3.000E+01	2.500E+01	2.200E+01	1.900E+01
1.600E+01	1.300E+01	1.180E+01	1.060E+01	1.000E+01	9.800E+00	1.000E+01
1.060E+01	1.180E+01	1.400E+01	2.000E+01	2.400E+01	3.800E+01	

INPUT SCHEDULE NUMBER 4 TABLE OF VALUES

GENERATOR LOSS VS MW

BIVARIATE TABLE OF Y VERSUS X
WITH Z AS A PARAMETER

VALUES OF X

2.500E+05	3.000E+05	3.500E+05	4.000E+05	4.500E+05	5.000E+05	5.500E+05
6.000E+05	6.500E+05	7.000E+05	7.500E+05	8.000E+05	8.500E+05	9.000E+05
9.500E+05	1.000E+06					

VALUES OF Z	VALUES OF Y					
9.000E-01	3.847E+03	4.021E+03	4.229E+03	4.470E+03	4.747E+03	5.058E+03
	5.406E+03	5.791E+03	6.213E+03	6.673E+03	7.171E+03	7.710E+03
	8.288E+03	8.907E+03	9.568E+03	1.027E+04		
9.700E-01	3.792E+03	3.941E+03	4.120E+03	4.327E+03	4.563E+03	4.830E+03
	5.127E+03	5.456E+03	5.816E+03	6.208E+03	6.633E+03	7.092E+03
	7.584E+03	8.111E+03	8.672E+03	9.270E+03		
9.800E-01	3.785E+03	3.931E+03	4.106E+03	4.309E+03	4.540E+03	4.801E+03
	5.092E+03	5.414E+03	5.766E+03	6.150E+03	6.566E+03	7.015E+03
	7.496E+03	8.011E+03	8.561E+03	9.145E+03		
9.900E-01	3.778E+03	3.922E+03	4.093E+03	4.291E+03	4.518E+03	4.773E+03

IP7019006

(A) HAS ADDITION AFTER MULTIPLICATION
(B) HAS ADDITION BEFORE MULTIPLICATION

IP7019007

INPUT SCHEDULE NUMBER 14 TABLE OF VALUES

SSR flow over load

UNIVARIATE TABLE OF Y VERSUS X

VALUES OF X

2.172E+06	3.332E+06	4.984E+06	6.726E+06	6.750E+06	6.900E+06

VALUES OF Y

0.000E+00	0.000E+00	4.309E+03	9.414E+03	9.483E+03	9.910E+03

INPUT SCHEDULE NUMBER 15 TABLE OF VALUES

Injection water flow to BFP over load

UNIVARIATE TABLE OF Y VERSUS X

VALUES OF X

2.172E+06	3.332E+06	4.984E+06	6.726E+06	6.750E+06	6.900E+06

VALUES OF Y

2.672E+04	3.252E+04	4.039E+04	4.826E+04	4.841E+04	4.903E+04

IP7019008

VARIABLE REFERENCES TO SCHEDULE TABLES
(CALCULATIONS BEGIN AT ITRSCH = 2)

SCHEDULE VBLS. ID	TBL.# REFD.	Y VAR.	LOCATION USER ID	X VAR.	LOCATION USER ID	Z VAR.	LOCATION USER ID	INTRVL/ SPCL INIT
1	1	EXUSLS	12	VEANP	12			1/NO
2	1	EXUSLS	13	VEANP	13			1/NO
3	1	EXUSLS	14	VEANP	14			1/NO
6	4	OPVB	195	BKGROS	0	POWFAC	1	1/NO
16	14	WWFIXB	141	WWVSC	59			1/NO
17	15	WWFIXB	44	WWVSC	59			1/NO

* SPCL INIT (YES) - PRIOR TO FIRST ITERATE AT USER OPTION

IP7019009

CONTROLS INPUT
(CALCULATIONS BEGIN AT ITRCON = 5)

CONT ID	VALUE OF GOAL(Y) VARIABLE	FRACT. CONV. CRIT.	GOAL(Y) VARIABLE COMBINATION	CONTROL(X) VARIABLE	CONT LIMITS XCLO/ XCHI	INIT./ INTRVL/ RELAX
					5.00E-03	5
1	0.00000E+00	1.0E-03	(1.00E+00)*OPVB (200)	PDRPL (39)	7.00E-01	1
						1.0000
			+ (-1.00E+00)*PP (54)			

IP7019010

DEFINITIONS OF SPECIAL OPERATIONS SPECIFIED
(CALCULATIONS BEGIN AT ITROPS = 12)

OPER-ATION ID	FIRST VARIABLE (ID)	OPERATION	SECOND VARIABLE (ID)	=	RESULT VARIABLE(ID)	INTERVAL/ SPCL INIT*
1	PP (81)	EQL		=	PPSTRU(146)	1/NO
2	PP (-146)	PTH	TT (-146)	=	OPVB (1)	1/NO
3	PP (81)	SHF		=	OPVB (2)	1/NO
4	PP (81)	SHG		=	OPVB (3)	1/NO
5	OPVB (1)	SUB	OPVB (2)	=	OPVB (4)	1/NO
6	OPVB (3)	SUB	OPVB (2)	=	OPVB (5)	1/NO
7	OPVB (4)	DIV	OPVB (5)	=	OPVB (6)	1/NO
8	WW (146)	MUL	OPVB (6)	=	WWFIXB(65)	1/NO
9	OPVB (3)	EQL		=	HHFIXB(65)	1/NO
10	WWFIXB(65)	BIF	OPVB (8)	=	OPVB (7)	1/NO
11	WWFIXB(65)	MUL	OPVB (7)	=	WWFIXB(65)	1/NO
23	WW (421)	ADD	WW (416)	=	OPVB (24)	1/NO
33	OPVB (32)	EQL		=	TTTORH(33)	1/NO
42	OPVB (41)	EQL		=	TTTORH(32)	1/NO
69	PP (66)	PTH	OPVB (68)	=	OPVB (69)	1/YES
70	WW (66)	MUL	OPVB (69)	=	OPVB (70)	1/YES
71	WW (131)	MUL	HH (131)	=	OPVB (71)	1/YES
72	OPVB (70)	SUB	OPVB (71)	=	OPVB (72)	1/YES
73	OPVB (72)	DIV	WW (137)	=	OPVB (73)	1/YES
74	PP (4)	PHT	OPVB (73)	=	TEXIP (4)	1/YES
76	WW (97)	MUL	HH (28)	=	OPVB (76)	20/NO
77	WW (96)	MUL	HH (96)	=	OPVB (77)	20/NO
78	OPVB (76)	SUB	OPVB (77)	=	OPVB (78)	20/NO
79	OPVB (78)	DIV	WW (28)	=	OPVB (79)	20/NO
80	PP (28)	PHT	OPVB (79)	=	TEXIP (7)	20/NO
100	WW (59)	SUB	WW (609)	=	OPVB (100)	1/NO
101	HH (59)	SUB	HH (114)	=	OPVB (101)	1/NO
102	OPVB (100)	MUL	OPVB (101)	=	OPVB (102)	1/NO
103	HH (15)	SUB	HH (613)	=	OPVB (103)	1/NO
104	WW (613)	MUL	OPVB (103)	=	OPVB (104)	1/NO
105	HH (59)	SUB	HH (106)	=	OPVB (105)	1/NO
106	WW (609)	MUL	OPVB (105)	=	OPVB (106)	1/NO
107	PP (114)	PTH	OPVB (99)	=	OPVB (107)	1/NO
108	OPVB (107)	SUB	HH (114)	=	OPVB (108)	1/NO
109	OPVB (20)	MUL	OPVB (108)	=	OPVB (109)	1/NO
110	OPVB (102)	ADD	OPVB (104)	=	OPVB (110)	1/NO
111	OPVB (106)	ADD	OPVB (109)	=	OPVB (111)	1/NO
112	OPVB (110)	ADD	OPVB (111)	=	OPVB (112)	1/NO
113	BKNET (0)	MUL	OPVB (10)	=	OPVB (113)	1/NO
114	OPVB (112)	DIV	OPVB (113)	=	OPVB (114)	1/NO
150	WW (22)	MUL	OPVB (150)	=	OPVB (151)	1/NO

IP7019011

* SPCL INITIATION (YES) - PRIOR TO FIRST ITERATE AT USER OPTION

IP7019012

DEFINITIONS OF SPECIAL OPERATIONS SPECIFIED
(CALCULATIONS BEGIN AT ITROPS = 12)

OPER-ATION ID	FIRST VARIABLE (ID)	OPERATION	SECOND VARIABLE (ID)	=	RESULT VARIABLE(ID)	INTERVAL/ SPCL INIT*
183	WW (67)	ADD	WW (180)	=	OPVB (183)	1/NO
184	OPVB (182)	DIV	OPVB (183)	=	OPVB (184)	1/NO
185	PP (-67)	PHS	OPVB (184)	=	OPVB (185)	1/NO
186	PP (777)	PSH	OPVB (185)	=	OPVB (186)	1/NO
187	OPVB (184)	SUB	OPVB (186)	=	OPVB (187)	1/NO
189	OPVB (184)	SUB	HH (97)	=	OPVB (189)	1/NO
190	OPVB (189)	DIV	OPVB (187)	=	OPVB (190)	1/NO
193	PPGNHR(1)	SUB	PPGNH2(1)	=	OPVB (193)	1/NO
194	OPVB (193)	MUL	OPVB (192)	=	OPVB (194)	1/NO
196	OPVB (195)	SUB	OPVB (194)	=	BKELEI(1)	1/NO

* SPCL INITIATION (YES) - PRIOR TO FIRST ITERATE AT USER OPTION

SPECIAL INPUT VARIABLES

SPECIAL INPUT ID	DESCRIPTION	VARIABLE (ID)	VALUE	UNITS	VALI-DITY
1	MAIN STEAM PRESSURE	PPVSC (59)	2285.8	PSIA	
2	MAIN STEAM TEMPERATURE	TTVSC (59)	******	DEG-F	
3	MAIN STEAM FLOW	WWVSC (59)	******	LBM/HR	
4	1ST STAGE INLET PRESS	OPVB (200)	222	NO-UNITS	
5	EXTRACTION PRESSURE HP HTR 8	PSIPV (3)	1053	PSIA	
6	HP SECTION EXHAUST PRESSURE	PSIPV (4)	612	PSIA	
7	EXTRACTION PRESSURE HP HTR 6	PSIPV (6)	255	PSIA	
8	IP SECTION EXHAUST PRESSURE	PSIPV (7)	136.	PSIA	
9	EXTRACTION PRESSURE LP HTR 4	PSIPV (8)	67.	PSIA	
10	EXTRACTION PRESSURE LP HTR 3	PSIPV (9)	43.	PSIA	
11	EXTRACTION PRESSURE LP HTR 2	PSIPV (10)	13.245	PSIA	
12	EXTRACTION PRESSURE LP HTR 1A	PSIPV (11)	5.900	PSIA	
13	EXTRACTION PRESSURE LP HTR 1B	PSIPV (46)	5.609	PSIA	
14	EXTRACTION PRESSURE LP HTR 1C	PSIPV (47)	5.779	PSIA	
16	EXTRACTION TEMP HP HTR 8	TEXIP (3)	785.551	DEG-F	
17	HP SECTION EXHAUST TEMP	OPVB (68)	641.996	Not-Specd	
18	EXTRACTION TEMP HP HTR 6	TEXIP (6)	797.905	DEG-F	
19	IP SECTION EXHAUST TEMP	TEXIP (7)	638.214	DEG-F	
20	EXTRACTION TEMP LP HTR 4	TEXIP (8)	505.476	DEG-F	

IP7019013

36	LP HTR 4 SHELL INLET PR	PPSI	(22)	67.001 PSIA
37	LP HTR 3 SHELL INLET PR	PPSI	(21)	42.721 PSIA
38	LP HTR 2 SHELL INLET PR	PPSI	(20)	12.734 PSIA
39	LP HTR 1A SHELL INLET PR	PPSI	(219)	5.599 PSIA

IP7019014

SPECIAL INPUT VARIABLES

SPECIAL INPUT ID	DESCRIPTION	VARIABLE (ID)	VALUE	UNITS	VALI-DITY
40	LP HTR 1B SHELL INLET PR	PPSI (19)	5.344	PSIA	
41	LP HTR 1C SHELL INLET PR	PPSI (319)	5.495	PSIA	
43	HP HTR 8A FW OUTLET TEMP	TTFO (28)	549.956	DEG-F	
44	HP HTR 8B FW OUTLET TEMP	TTFO (29)	548.680	DEG-F	
45	HP HTR 7A FW OUTLET TEMP	TTFO (26)	487.462	DEG-F	
46	HP HTR 7B FW OUTLET TEMP	TTFO (27)	485.559	DEG-F	
47	HP HTR 6A FW OUTLET TEMP	TTFO (24)	404.184	DEG-F	
48	HP HTR 6B FW OUTLET TEMP	TTFO (25)	404.100	DEG-F	
49	DA FW OUTLET TEMP	TTFO (23)	350.353	DEG-F	
50	LP HTR 4 FW OUTLET TEMP	TTFO (22)	303.627	DEG-F	
51	LP HTR 3 FW OUTLET TEMP	TTFO (21)	272.230	DEG-F	
52	LP HTR 2 FW OUTLET TEMP	TTFO (20)	202.922	DEG-F	
53	LP HTR 1A FW OUTLET TEMP	TTFO (219)	164.018	DEG-F	
54	LP HTR 1B FW OUTLET TEMP	TTFO (19)	162.917	DEG-F	
55	LP HTR 1C FW OUTLET TEMP	TTFO (319)	162.645	DEG-F	
57	HP HTR 8A DRAIN OUTLET TEMP	TTDO (28)	494.932	DEG-F	
58	HP HTR 8B DRAIN OUTLET TEMP	TTDO (29)	494.367	DEG-F	
59	HP HTR 7A DRAIN OUTLET TEMP	TTDO (26)	412.975	DEG-F	
60	HP HTR 7B DRAIN OUTLET TEMP	TTDO (27)	411.744	DEG-F	
61	HP HTR 6A DRAIN OUTLET TEMP	TTDO (24)	360.782	DEG-F	
62	HP HTR 6B DRAIN OUTLET TEMP	TTDO (25)	365.049	DEG-F	
63	LP HTR 4 DRAIN OUTLET TEMP	TTDO (22)	281.615	DEG-F	
64	LP HTR 3 DRAIN OUTLET TEMP	TTDO (21)	232.040	DEG-F	
65	LP HTR 2 DRAIN OUTLET TEMP	TTDO (20)	173.401	DEG-F	
66	LP HTR 1A DRAIN OUTLET TEMP	TTDO (219)	164.754	DEG-F	
67	LP HTR 1B DRAIN OUTLET TEMP	TTDO (19)	162.811	DEG-F	
68	LP HTR 1C DRAIN OUTLET TEMP	TTDO (319)	163.900	DEG-F	
70	BBFP A DISCHARGE PRESSURE	PMPDIS(34)	296.145	PSIA	
71	BBFP B DISCHARGE PRESSURE	PMPDIS(35)	296.145	PSIA	
72	CONDENSATE PUMP A DISCHARGE PRES	PMPDIS(42)	434.940	PSIA	
73	CONDENSATE PUMP B DISCHARGE PRES	PMPDIS(43)	434.940	PSIA	
75	BFPT A EXHAUST PRESSURE	PPPTGX(37)	1.785	PSIA	
76	BFPT A POWER DELIVERED BY SHAFT	BKPMOT(37)	0.000	KW	
77	MAIN BFP 1A DISCHARGE PRESS	PMPDIS(37)	2827.740	PSIA	
78	BFPT A EXTRACTION	WWFIXB(143)	122602.789	LBM/HR	
79	BFPT B EXHAUST PRESSURE	PPPTGX(38)	1.354	PSIA	
80	BFPT B POWER DELIVERED BY SHAFT	BKPMOT(38)	0.000	KW	
81	MAIN BFP 1B DISCHARGE PRESS	PMPDIS(38)	2829.849	PSIA	
82	BFPT B EXTRACTION	WWFIXB(142)	133170.030	LBM/HR	
83	GENERATOR GROSS POWER	POWER (1)	949597.865	KW	
84	GENERATOR H2 PRESSURE	PPGNH2(1)	64.196	PSIA	
85	GENERATOR POWER FACTOR	POWFAC(1)	0.990	NO UNITS	

IP7019015

SPECIAL INPUT VARIABLES

SPECIAL INPUT ID	DESCRIPTION	VARIABLE (ID)	VALUE	UNITS	VALI-DITY
89	BOILER BLOWDOWN	OPVB (20)	17220.000	NO-UNITS	
90	PRESSURE EXHAUST LPA	PSIPV (12)	1.587	PSIA	
91	PRESSURE EXHAUST LPB	PSIPV (13)	1.283	PSIA	
92	PRESSURE EXHAUST LPC	PSIPV (14)	1.151	PSIA	
93	APH RETURN TO COND TEMP	OPVB (41)	78.190	NO-UNITS	
94	ENTHALPY LPA EXHAUST	HSIPV (12)	994.000	BTU/LBM	
95	ENTHALPY LPB EXHAUST	HSIPV (13)	994.000	BTU/LBM	
96	ENTHALPY LPC EXHAUST	HSIPV (14)	994.000	BTU/LBM	
97	MAIN STEAM ATTEMPERATION	WWFIXB(608)	378982.209	LBM/HR	
98	ENTHALPY 18TH STG EXHAUST	HSIPV (10)	1151.400	BTU/LBM	
99	ENTHALPY 19TH STG A EXHAUST	HSIPV (11)	1094.000	BTU/LBM	
100	ENTHALPY 19TH STG B EXHAUST	HSIPV (46)	1094.000	BTU/LBM	
101	ENTHALPY 19TH STG C EXHAUST	HSIPV (47)	1094.000	BTU/LBM	
102	APH EXTRACTION WATER FLOW	WWFIXB(144)	0.000	LBM/HR	
103	CGR EXTRACTION WATER FLOW	WWFIXB(145)	0.000	LBM/HR	
104	CYCLE MAKEUP	WWVSC (176)	17220.000	LBM/HR	
105	SPE BAROMETRIC PRESS	PRESHL(30)	12.578	PSIA	
106	CGR LOSS FLOW	WWFIXB(415)	0.000	LBM/HR	
107	ENTHALPY EXT TO HP HTR #8	HEXTLK(3)	1377.287	BTU/LBM	
108	ENTHALPY EXT TO HP HTR #6	HEXTLK(6)	1429.925	BTU/LBM	
109	ENTHALPY EXT TO LP HTR #4	HEXTLK(8)	1297.618	BTU/LBM	
110	ENTHALPY EXT TO LP HTR #3	HEXTLK(9)	1254.903	BTU/LBM	
111	ENTHALPY EXT TO LP HTR #2	HEXTLK(10)	1171.141	BTU/LBM	
112	BOILER BLOWDOWN (FRAC)	OPVB (21)	0.003	NO-UNITS	
113	FGR RETURN TEMP	OPVB (32)	100.000	NO-UNITS	
114	APH EXT FLOW FRAC	OPVB (40)	0.000	NO-UNITS	
115	FGR EXT FLOW FRACTION	OPVB (30)	0.000	NO-UNITS	
116	MAIN STEAM ATTEMP FRAC	OPVB (50)	0.057	NO-UNITS	
117	CGR LOSS FLOW FRACTION	OPVB (60)	0.000	NO-UNITS	
118	APH LEAKAGE	WWFIXB(413)	0.000	LBM/HR	
119	APH LOSS FLOW FRACTION	OPVB (61)	0.000	Not-Specd	

******** The following input lines were not used.

891259
891251
891250
891249
891241
891240
891230

IP7019016

842400
842309
842306
842305
842300
842209
842206
842205
842200
842109
842106
842105
842100
842009
842006
842005
842000
841909
841906
841905
841900
841809
841806
841805
841800
841709
841706
841705
841700
841609
841606
841605
841600
841509
841506
841505
841500
841409
841406
841405
841400
841309
841306
841305
841300
841209
841206
841205
841200
841109
841106
841105
841100
841000

IP7019017

840700
840609
840606
840605
840600
840509
840506
840505
840500
840409
840406
840405
840400
840309
840306
840305
840300
840209
840206
840205
840200
831502
831501
831500
831402
831401
831400
831302
831301
831300
831202
831201
831200
831102
831101
831100
831002
831001
831000
830902
830901
830900
830802
830801
830800
830702
830701
830700
830402
830401
830400
821301
821300
821201

IP7019018

```
820500
820201
820200
811312
811311
811310
811302
811301
811300
811212
811211
811210
811202
811201
811200
811112
811111
811110
811102
811101
811100
811012
811011
811010
811002
811001
811000
810911
810910
810901
810900
810811
810810
810801
810800
810711
810710
810701
810700
810611
810610
810601
810600
810510
810500
810210
810200


*** WARNING FROM CAT1 ROUTINE ***
    STEAM DRIVEN PUMP, TYPE 40, WITH ID =  37, HAS
    REFERENCED A DEMAND SUPPLIER WITH ID = 143.  IT
    IS REQUIRED THAT THE DEMAND SUPPLIER BE A DEMAND
```

IP7019019

```
    SPLITTER (TYPE 60), OR A TURBINE (TYPE 2, 3, 5, 6,
    7, 8).  SEE INPUT VARIABLE ITGDEM IN YOUR INPUT
    SPECIFICATION.

    MEANWHILE, TO CONTINUE COMPUTATIONS, THIS DEMAND
    REFERENCE IS BEING SET TO ZERO.
*** END OF WARNING ***
```

IP7019020

SCHEDULED VARIABLE VALUES CALCULATED

SCHEDULE VARIABLES ID	Y VALUE USED FOR ITERATE 21	X VALUE FROM ITERATE 20	Z VALUE FROM ITERATE 20
1	EXUSLS(12) 2.18006E+01	VEANP (12) 9.12662E+02	
2	EXUSLS(13) 1.73441E+01	VEANP (13) 8.23555E+02	
3	EXUSLS(14) 1.12942E+01	VEANP (14) 6.83140E+02	
6	OPVB (195) 8.45318E+03	BKGROS(0) 9.49598E+02	POWFAC(1) 9.89553E-01
16	WWFIXB(141) 9.43363E+03	WWVSC (59) 6.73256E+06	
17	WWFIXB(44) 4.83041E+04	WWVSC (59) 6.73256E+06	

IP7019021

OPERATION SET VALUES CALCULATED
AT THE START OF ITERATION 21

OPER-ATION ID	VARIABLE (ID) VALUE	OPERATION	VARIABLE (ID) VALUE	=	VARIABLE (ID) VALUE
1	PP (81) 5.54138E+00	EQL		=	PPSTRU(146) 5.54138E+00
2	PP (-146) 1.00000E+01	PTH	TT (-146) 1.73406E+02	=	OPVB (1) 1.41410E+02
3	PP (81) 5.54138E+00	SHF		=	OPVB (2) 1.34548E+02
4	PP (81) 5.54138E+00	SHG		=	OPVB (3) 1.13250E+03
5	OPVB (1) 1.41410E+02	SUB	OPVB (2) 1.34548E+02	=	OPVB (4) 6.86174E+00
6	OPVB (3) 1.13250E+03	SUB	OPVB (2) 1.34548E+02	=	OPVB (5) 9.97951E+02
7	OPVB (4) 6.86174E+00	DIV	OPVB (5) 9.97951E+02	=	OPVB (6) 6.87583E-03
8	WW (146) 6.62864E+05	MUL	OPVB (6) 6.87583E-03	=	WWFIXB(65) 4.55774E+03
9	OPVB (3) 1.13250E+03	EQL		=	HHFIXB(65) 1.13250E+03
10	WWFIXB(65) 4.55774E+03	BIF	OPVB (8) 0.00000E+00	=	OPVB (7) 1.00000E+00
11	WWFIXB(65) 4.55774E+03	MUL	OPVB (7) 1.00000E+00	=	WWFIXB(65) 4.55774E+03
23	WW (421) 0.00000E+00	ADD	WW (416) 0.00000E+00	=	OPVB (24) 0.00000E+00

IP7019022

OPERATION SET VALUES CALCULATED
AT THE START OF ITERATION 21

OPER-ATION ID	VARIABLE (ID) VALUE	OPERATION	VARIABLE (ID) VALUE	=	VARIABLE (ID) VALUE
33	OPVB (32) 1.00000E+02	EQL		=	TTTORH(33) 1.00000E+02
42	OPVB (41) 7.81904E+01	EQL		=	TTTORH(32) 7.81904E+01
69	PP (66) 6.12337E+02	PTH	OPVB (68) 6.41996E+02	=	OPVB (69) 1.31543E+03
70	WW (66) 6.15634E+06	MUL	OPVB (69) 1.31543E+03	=	OPVB (70) 8.09822E+09
71	WW (131) 2.36822E+04	MUL	HH (131) 1.46624E+03	=	OPVB (71) 3.47239E+07
72	OPVB (70) 8.09822E+09	SUB	OPVB (71) 3.47239E+07	=	OPVB (72) 8.06350E+09
73	OPVB (72) 8.06350E+09	DIV	WW (137) 6.13266E+06	=	OPVB (73) 1.31484E+03
74	PP (4) 6.12337E+02	PHT	OPVB (73) 1.31484E+03	=	TEXIP (4) 6.41060E+02
76	WW (97) 4.76350E+05	MUL	HH (28) 1.34760E+03	=	OPVB (76) 6.41631E+08 #
77	WW (96) 1.97676E+04	MUL	HH (96) 1.31485E+03	=	OPVB (77) 2.59914E+07 #
78	OPVB (76) 6.41631E+08	SUB	OPVB (77) 2.59914E+07	=	OPVB (78) 6.15640E+08 #
79	OPVB (78) 6.15640E+08	DIV	WW (28) 4.56583E+05	=	OPVB (79) 1.34760E+03 #

IP7019023

OPERATION SET VALUES CALCULATED
AT THE START OF ITERATION 21

OPER-ATION ID	VARIABLE (ID) VALUE	OPERATION	VARIABLE (ID) VALUE	=	VARIABLE (ID) VALUE
80	PP (28) 1.36560E+02	PHT	OPVB (79) 1.34760E+03	=	TEXIP (7) 6.40898E+02 #
100	WW (59) 6.73256E+06	SUB	WW (609) 3.78982E+05	=	OPVB (100) 6.35358E+06
101	HH (59) 1.46624E+03	SUB	HH (114) 5.45577E+02	=	OPVB (101) 9.20666E+02
102	OPVB (100) 6.35358E+06	MUL	OPVB (101) 9.20666E+02	=	OPVB (102) 5.84952E+09
103	HH (15) 1.52556E+03	SUB	HH (613) 1.31543E+03	=	OPVB (103) 2.10130E+02
104	WW (613) 5.59208E+06	MUL	OPVB (103) 2.10130E+02	=	OPVB (104) 1.17506E+09
105	HH (59) 1.46624E+03	SUB	HH (106) 3.30822E+02	=	OPVB (105) 1.13542E+03
106	WW (609) 3.78982E+05	MUL	OPVB (105) 1.13542E+03	=	OPVB (106) 4.30304E+08
107	PP (114) 2.69959E+03	PTH	OPVB (99) 0.00000E+00	=	OPVB (107) 7.56265E+02
108	OPVB (107) 7.56265E+02	SUB	HH (114) 5.45577E+02	=	OPVB (108) 2.10688E+02
109	OPVB (20) 1.72200E+04	MUL	OPVB (108) 2.10688E+02	=	OPVB (109) 3.62804E+06
110	OPVB (102) 5.84952E+09	ADD	OPVB (104) 1.17506E+09	=	OPVB (110) 7.02459E+09

IP7019024

OPERATION SET VALUES CALCULATED
AT THE START OF ITERATION 21

OPER-ATION ID	VARIABLE (ID) VALUE	OPERATION	VARIABLE (ID) VALUE	=	VARIABLE (ID) VALUE
111	OPVB (106) 4.30304E+08	ADD	OPVB (109) 3.62804E+06	=	OPVB (111) 4.33932E+08
112	OPVB (110) 7.02459E+09	ADD	OPVB (111) 4.33932E+08	=	OPVB (112) 7.45852E+09
113	BKNET (0) 9.46071E+02	MUL	OPVB (10) 1.00000E+03	=	OPVB (113) 9.46071E+05
114	OPVB (112) 7.45852E+09	DIV	OPVB (113) 9.46071E+05	=	OPVB (114) 7.88368E+03
150	VV (22) 1.61953E-02	MUL	OPVB (150) 1.24680E-01	=	OPVB (151) 2.01923E-03
151	OPVB (151) 2.01923E-03	MUL	WW (22) 5.19416E+06	=	OPVB (152) 1.04882E+04
155	VV (207) 1.79822E-02	MUL	OPVB (150) 1.24680E-01	=	OPVB (156) 2.24202E-03
156	OPVB (156) 2.24202E-03	MUL	WW (207) 6.70148E+06	=	OPVB (157) 1.50248E+04
160	PP (4) 6.12337E+02	PSH	SS (59) 1.54141E+00	=	OPVB (165) 1.30154E+03
161	HH (59) 1.46624E+03	SUB	OPVB (165) 1.30154E+03	=	OPVB (166) 1.64704E+02
162	HH (59) 1.46624E+03	SUB	HH (66) 1.31543E+03	=	OPVB (167) 1.50811E+02
163	M * OPVB (167) 1.00E+00 * 1.51E+02 1.50811E+02	DIV	M * OPVB (166) 1.00E+00 * 1.65E+02 1.64704E+02	=	M * OPVB (168) 1.00E+02 * 9.16E-01 9.15651E+01

IP7019025

OPERATION SET VALUES CALCULATED
AT THE START OF ITERATION 21

OPER-ATION ID	VARIABLE (ID) VALUE	OPERATION	VARIABLE (ID) VALUE	=	VARIABLE (ID) VALUE
170	PP (1) 1.62148E+03	DIV	PP (4) 6.12337E+02	=	OPVB (170) 2.64801E+00
171	PP (67) 5.70848E+02	DIV	PP (777) 1.36560E+02	=	OPVB (171) 4.18019E+00
172	PP (66) 6.12337E+02	SUB	PP (-15) 5.70848E+02	=	OPVB (172) 4.14886E+01
173	M * OPVB (172) 1.00E+00 * 4.15E+01 4.14886E+01	DIV	M * PP (66) 1.00E+00 * 6.12E+02 6.12337E+02	= M *	OPVB (173) 1.00E+02 * 6.78E-02 6.77546E+00
180	HH (-67) 1.52554E+03	MUL	WW (67) 5.59445E+06	=	OPVB (180) 8.53454E+09
181	HH (180) 1.42784E+03	MUL	WW (180) 1.61927E+04	=	OPVB (181) 2.31206E+07
182	OPVB (180) 8.53454E+09	ADD	OPVB (181) 2.31206E+07	=	OPVB (182) 8.55766E+09
183	WW (67) 5.59445E+06	ADD	WW (180) 1.61927E+04	=	OPVB (183) 5.61065E+06
184	OPVB (182) 8.55766E+09	DIV	OPVB (183) 5.61065E+06	=	OPVB (184) 1.52525E+03
185	PP (-67) 5.70848E+02	PHS	OPVB (184) 1.52525E+03	=	OPVB (185) 1.72622E+00
186	PP (777) 1.36560E+02	PSH	OPVB (185) 1.72622E+00	=	OPVB (186) 1.33091E+03

IP7019026

OPERATION SET VALUES CALCULATED
AT THE START OF ITERATION 21

OPER-ATION ID	VARIABLE (ID) VALUE	OPERATION	VARIABLE (ID) VALUE	=	VARIABLE (ID) VALUE
187	OPVB (184) 1.52525E+03	SUB	OPVB (186) 1.33091E+03	=	OPVB (187) 1.94347E+02
189	OPVB (184) 1.52525E+03	SUB	HH (97) 1.34624E+03	=	OPVB (189) 1.79018E+02
190	M * OPVB (189) 1.00E+00 * 1.79E+02 1.79018E+02	DIV	M * OPVB (187) 1.00E+00 * 1.94E+02 1.94347E+02	=	M * OPVB (190) 1.00E+02 * 9.21E-01 9.21123E+01
193	PPGNHR(1) 6.30000E+01	SUB	PPGNH2(1) 6.41962E+01	=	OPVB (193) -1.19624E+00
194	OPVB (193) -1.19624E+00	MUL	OPVB (192) 1.73000E+01	=	OPVB (194) -2.06949E+01
196	OPVB (195) 8.45318E+03	SUB	OPVB (194) -2.06949E+01	=	BKELEI(1) 8.47387E+03

DUE TO INTERVAL, THIS OPERATION WAS NOT CALCULATED THIS ITERATE;
CAUTION INTERPRETING VALUES.

IP7019027

```
*** WARNING FROM VALTHV ROUTINE ***
    For throttle valve component with ID =  39, the
    calculated equivalent throttle flow ratio is
       1.03395.  This is not physically possible.  The
    equivalent throttle flow ratio is the load-point
    flow coefficient divided by the VWO flow
    coefficient.  This ratio cannot be larger than 1.
    You are advised to review your model to determine
    the cause of this result and to fix it.

    You have the option to suppress the printing of
    this warning message by use of suppression
    index = 111.
*** END OF WARNING ***
```

IP7019028

CONTROLLED VARIABLE VALUES CALCULATED

CONTROL ID	Y VARIABLE/ VALUE FROM ITERATE 21	FRAC(ABS) DEVIATION FROM GOAL	Y VARIABLE GOAL VALUE	X VARIABLE/ VALUE USED AT ITERATE 21	CONVG	LAST ITN X LIMTD
1	1.0E+00 * OPVB (200)			PDRPL (39)		
	-1.0E+00 * PP (54)					
	3.86535E-11	(-3.9E-11)	0.00000E+00	2.74562E-02	YES	6

IP7019029

TABLE OF NON-ZERO OPERATIONAL VARIABLES
(PRESENTATION IS: ID, VALUE; ID, ...)

1, 1.41410E+02;	2, 1.34548E+02;	3, 1.13250E+03;	4, 6.86174E+00
5, 9.97951E+02;	6, 6.87583E-03;	7, 1.00000E+00;	10, 1.00000E+03
14, 7.71700E+03;	20, 1.72200E+04;	21, 2.55772E-03;	32, 1.00000E+02
41, 7.81904E+01;	50, 5.66654E-02;	68, 6.41996E+02;	69, 1.31543E+03
70, 8.09822E+09;	71, 3.47239E+07;	72, 8.06350E+09;	73, 1.31484E+03
76, 6.41631E+08;	77, 2.59914E+07;	78, 6.15640E+08;	79, 1.34760E+03
100, 6.35358E+06;	101, 9.20666E+02;	102, 5.84952E+09;	103, 2.10130E+02
104, 1.17506E+09;	105, 1.13542E+03;	106, 4.30304E+08;	107, 7.56265E+02
108, 2.10688E+02;	109, 3.62804E+06;	110, 7.02459E+09;	111, 4.33932E+08
112, 7.45852E+09;	113, 9.46071E+05;	114, 7.88368E+03;	150, 1.24680E-01
151, 2.01923E-03;	152, 1.04882E+04;	156, 2.24202E-03;	157, 1.50248E+04
165, 1.30154E+03;	166, 1.64704E+02;	167, 1.50811E+02;	168, 9.15651E+01
170, 2.64801E+00;	171, 4.18019E+00;	172, 4.14886E+01;	173, 6.77546E+00
180, 8.53454E+09;	181, 2.31206E+07;	182, 8.55766E+09;	183, 5.61065E+06
184, 1.52525E+03;	185, 1.72622E+00;	186, 1.33091E+03;	187, 1.94347E+02
189, 1.79018E+02;	190, 9.21123E+01;	192, 1.73000E+01;	193,-1.19624E+00
194,-2.06949E+01;	195, 8.45318E+03;	200, 2.22308E+03	

IP7019030

SUMMARY OF ACTIVE SPECIAL OPTIONS

```
*** SPECIAL OPTION  2 IS ACTIVE
    IT SWINGS CONDENSING TURBINE EXPANSION LINE TO MATCH GENERATION

       PRODUCING KEY RESULTS:

          STATUS                =  CONVERGED
          GEN 1 GROSS POWER     =  9.49598E+02 MW

          SEE THE TABLES BELOW,
          TITLED - DETAILED
          TURBINE PERFORMANCE
          TABLES A, B, AND C

       BASED ON KEY INPUTS:

          GEN 1 TARGET POWER    =  9.49598E+05 KW
          FIRST SWING COMP ID   =   1,  46,  47


*** SPECIAL OPTION  6 IS ACTIVE
    IT ANALYZES TEST DATA, AUTOMATICALLY STANDARDIZES
    SYSTEM PERFORMANCE, AND CALCULATES THE PERFORMANCE
    IMPACT OF COMPONENT UPGRADES

       PRODUCING KEY RESULTS:

          SEE OPTION 6 SPECIFIC TABLES THROUGHOUT THE
          SEVERAL CASES
          SPECIFIC RESULTS OF INTEREST, WITH TITLES:
            PERFORMANCE TEST ANALYSIS RESULTS - ALL CASES
               AT AND AFTER STANDARDIZATION
            COMPARISON OF STANDARDIZED RESULTS
               AT STANDARDIZATION STEP
            GENERATION, HEAT RATE, AND COST - FINAL CASE

       BASED ON KEY INPUTS:

          PRIMARILY TEST DATA - TEMPERATURES, PRESSURES,
          AND FLOWS ENTERED IN THE TEST REDUCTION STEP
```

IP7019031

FLAG SETTINGS AND DATA FOR SYSTEM

```
NTGCYC =   2, FOSSIL TURBINE GENERATOR CYCLE CALCULATION

NTIMES =  21, NUMBER OF SYSTEM ITERATIONS
              (ITRMAX = 150, ITRMIN =   5)

NCMP   = 161, NUMBER OF COMPONENTS USED IN THIS CASE
              (MXCMP = 500, MAXIMUM NUMBER ALLOWED)

NSTR   = 244, NUMBER OF STREAMS USED IN THIS CASE
              (MXSTR = 600, MAXIMUM NUMBER ALLOWED)

NRHEAT =   1, REHEAT TURBINE PLANT DESIGN

CONVERGENCE DATA:

       EXTERR =  1.00000E+00 LBM/HR, EXTRACTION FLOW CONVERGENCE
       CIRERR =  1.00000E+00 LBM/HR, TOTAL SYSTEM MASS FLOW CONVERGENCE
       TERROR =  5.00000E-06 - ,     COMPONENT CONVERGENCE
       PERROR =  1.00000E-03 - ,     STREAM CONVERGENCE
       GENERR =  1.00000E+00 KW,     GENERATOR CONVERGENCE
       ENEROR =  1.00000E+03 BTU/HR, ENERGY CONVERGENCE

REFERENCE DATA:

       TTDEAD =    50.00 DEG F, DEAD STATE TEMPERATURE
       PPDEAD =    14.70 PSIA,  DEAD STATE PRESSURE
       ZZDEAD =     0.00 FT,    DEAD STATE ELEVATION
       TTAIR  =    50.00 DEG F, AMBIENT TEMPERATURE

STEAM TURBINE DATA:

       NTURB  = 1,        GENERAL ELECTRIC TURBINES
       NGEPRO = 3,        TURBINES SOLVED, G.E. FOSSIL PROCEDURE GER-2007C
       TFREQ  = 1.033953, EQUIVALENT THROTTLE FLOW RATIO
       TFR1ST = 1.000000, FIRST ADMISSION THROTTLE FLOW RATIO

GENERATOR NO. 1 DATA

       NGNTYP =  2,           CONDUCTOR COOLED GENERATOR
       NGENER =  1,           GENERAL ELECTRIC GENERATOR
       NGNCOL =  0,           LOSSES ARE NOT RECOVERABLE THROUGH COOLERS
       ISPEED =  3600 RPM,    GENERATOR SPEED
       BKGRAT =  991000  KVA, RATED GENERATOR CAPACITY
       POWFAC =  0.900        GENERATOR POWER FACTOR
```

IP7019032

FLAG SETTINGS AND DATA FOR SYSTEM
(CONTINUED)

```
SPECIAL OPTION NUMBER  2 HAS BEEN FLAGGED IN THE INPUT
          (CALCULATIONS BEGIN AT ITRSPC =   5).
SPECIAL OPTION NUMBER  6 HAS BEEN FLAGGED IN THE INPUT
          (CALCULATIONS BEGIN AT ITRSPC =   5).
```

IP7019033

GEOMETRY CONFIGURATION OF MODEL

COMP NO.	COMP TYPE	COMPONENT DESCRIPTION	CONNECTING STREAM NOS. AND STREAM TYPE (NO. - TYPE) 1 IN	1 OUT	2 IN	2 OUT	3 IN	3 OUT
1	8	GENERAL TURBINE	118-0	1-0				
3	8	GENERAL TURBINE	120-0	3-0		684-0		
4	8	GENERAL TURBINE	3-0	4-0				
5	8	GENERAL TURBINE	67-2	5-0				
6	8	GENERAL TURBINE	68-0	7-0		411-0		
7	8	GENERAL TURBINE	7-0	777-0		28-0		
8	8	GENERAL TURBINE	127-2	8-0		404-2		
9	8	GENERAL TURBINE	8-0	9-0		405-2		
10	8	GENERAL TURBINE	9-0	10-0		406-2		
11	8	GENERAL TURBINE	307-0	11-0		12-0		
12	8	GENERAL TURBINE	79-0	16-0				
13	8	GENERAL TURBINE	77-0	13-0				
14	8	GENERAL TURBINE	11-0	14-0				
15	25	FOSSIL REHEATER	613-0	15-0				
16	10	STD. CONDENSER	16-0	18-0	108-2	23-2	781-0	
17	10	STD. CONDENSER	13-0	20-0	129-2	17-0		
18	10	STD. CONDENSER	14-0	22-0	23-2	62-0	132-0	
19	14	STD. FW. HEATER	154-0	19-0	80-2	21-0		
20	16	FWHT. BACK-DRAIN	138-0	24-0	406-2	50-5	149-0	
21	16	FWHT. BACK-DRAIN	139-0	25-0	405-2	51-0	219-0	
22	16	FWHT. BACK-DRAIN	140-0	26-2	404-2	52-0		
23	15	CONTACT HEATER	75-0	27-0	142-2		100-0	
24	18	FW. W/DESUP+COOL	158-0	34-1	166-2	37-0	161-0	
25	18	FW. W/DESUP+COOL	172-0	38-1	224-2	45-0	179-0	
26	18	FW. W/DESUP+COOL	34-1	32-1	167-2	36-0	162-0	
27	18	FW. W/DESUP+COOL	38-1	41-1	170-2	40-0	178-0	
28	18	FW. W/DESUP+COOL	32-1	33-0	168-2	35-0		
29	18	FW. W/DESUP+COOL	41-1	46-0	169-2	39-0		
30	20	GEN. HT. EXCH.	104-0	30-2	210-0	57-0		
31	23	EXT. DRAIN COOL.	133-0	31-0	303-0	49-0		
32	27	SPEC. HT. EXCH.	192-0	55-0				
33	27	SPEC. HT. EXCH.	194-0	56-0				
34	41	STD. ELE. PUMP	200-0	42-0				
35	41	STD. ELE. PUMP	196-0	43-0				
36	61	FIXED FLOW SPLIT	199-0	201-0		44-0		
37	40	STM. DRIVEN PUMP	202-0	420-0	152-2	63-0		
38	40	STM. DRIVEN PUMP	203-0	76-0	151-2	64-0		
39	35	THROTTLE VALVE	117-0	54-0				
40	54	TRIPLE MIXER	48-0	210-0	47-0		181-0	
42	41	STD. ELE. PUMP	135-0	58-0				
43	41	STD. ELE. PUMP	212-0	60-0				

IP7019034

GEOMETRY CONFIGURATION OF MODEL

COMP NO.	COMP TYPE	COMPONENT DESCRIPTION	CONNECTING STREAM NOS. AND STREAM TYPE (NO. - TYPE) 1 IN	1 OUT	2 IN	2 OUT	3 IN	3 OUT
47	8	GENERAL TURBINE	306-0	79-0		81-2		
59	33	INPUT COMPONENT		59-0				
60	31	INFINITE SOURCE		107-0				
61	63	FIXED P.C. SPLIT	107-0	108-2		129-2		
62	50	STANDARD MIXER	62-0	105-0	17-0			
63	30	INFINITE SINK	105-0					
64	32	OUTPUT COMPONENT	114-1					
65	61	FIXED FLOW SPLIT	146-5	69-0		70-0		
66	50	STANDARD MIXER	137-0	66-0	131-0			
67	50	STANDARD MIXER	15-0	67-2	156-0			
68	50	STANDARD MIXER	5-0	68-0	180-0			
69	50	STANDARD MIXER	60-0	213-0	58-0			
71	50	STANDARD MIXER	334-2	71-0	134-0			
72	50	STANDARD MIXER	24-0	72-0	144-0			
73	50	STANDARD MIXER	72-0	73-0	197-0			
74	50	STANDARD MIXER	25-0	74-0	147-0			
75	50	STANDARD MIXER	26-2	75-0	150-0			
80	51	FWHT-COND. MIXER	57-0	83-0	63-0			
81	51	FWHT-COND. MIXER	208-0	84-0	95-0			
82	51	FWHT-COND. MIXER	119-0	82-0	157-0			
83	51	FWHT-COND. MIXER	82-0	86-0	183-0			
84	51	FWHT-COND. MIXER	86-0	102-0	186-0			
85	51	FWHT-COND. MIXER	102-0	85-0	128-0			
87	51	FWHT-COND. MIXER	64-0	87-0	220-0			
88	51	FWHT-COND. MIXER	87-0	88-0	218-0			
89	51	FWHT-COND. MIXER	88-0	89-0	145-0			
90	51	FWHT-COND. MIXER	89-0	90-0	413-0			
93	51	FWHT-COND. MIXER	163-0	93-0	176-0			
94	54	TRIPLE MIXER	93-0	94-0	175-0		164-0	
95	54	TRIPLE MIXER	94-0	95-0	174-0		165-0	
96	51	FWHT-COND. MIXER	136-0	96-0	130-0			
97	51	FWHT-COND. MIXER	28-0	97-0	96-0			
98	51	FWHT-COND. MIXER	97-0	98-0	222-0			
99	51	FWHT-COND. MIXER	191-0	99-0	223-0			
100	51	FWHT-COND. MIXER	109-0	100-0	99-0			
101	50	STANDARD MIXER	43-0	101-0	42-0			
106	50	STANDARD MIXER	420-0	106-0	76-0			
109	51	FWHT-COND. MIXER	110-0	109-0	204-0			
110	51	FWHT-COND. MIXER	111-0	110-0	205-0			
111	51	FWHT-COND. MIXER	160-0	111-0	173-0			
114	50	STANDARD MIXER	23-0	114-1	115-0			

IP7019035

GEOMETRY CONFIGURATION OF MODEL

COMP NO.	COMP TYPE	COMPONENT DESCRIPTION	CONNECTING STREAM NOS. AND STREAM TYPE (NO. - TYPE) 1 IN	1 OUT	2 IN	2 OUT	3 IN	3 OUT
117	60	DEMAND SPLITTER	116-0	117-0		222-0		
118	68	VALVE STEM LEAK	54-0	118-0		125-0		
119	68	VALVE STEM LEAK	125-0	122-0		157-0		
120	64	SHAFT LEAKAGE	1-0	120-0		180-0		
121	64	SHAFT LEAKAGE	4-0	121-0		123-0		
122	64	SHAFT LEAKAGE	122-0	131-0		156-0		
123	64	SHAFT LEAKAGE	123-0	130-0		183-0		
124	64	SHAFT LEAKAGE	121-0	124-0		184-0		
125	64	SHAFT LEAKAGE	184-0	136-0		186-0		
126	60	DEMAND SPLITTER	66-0	126-0		171-0		
127	64	SHAFT LEAKAGE	777-0	127-2		148-0		
128	64	SHAFT LEAKAGE	124-0	137-0		47-0		
129	61	FIXED FLOW SPLIT	148-0	128-0		181-0		
131	63	FIXED P.C. SPLIT	22-0	135-0		212-0		
132	51	FWHT-COND. MIXER	215-0	132-0	227-0			
133	63	FIXED P.C. SPLIT	30-2	133-0		134-0		
134	63	FIXED P.C. SPLIT	71-0	138-0		144-0		
135	63	FIXED P.C. SPLIT	73-0	139-0		147-0		
136	63	FIXED P.C. SPLIT	74-0	140-0		150-0		
137	63	FIXED P.C. SPLIT	52-0	219-0		220-0		
138	63	FIXED P.C. SPLIT	51-0	149-0		218-0		
139	63	FIXED P.C. SPLIT	50-5	146-5		145-0		
140	51	FWHT-COND. MIXER	18-0	215-0	20-0			
141	67	STM. SEAL REG.	182-0	141-0		211-0		
142	61	FIXED FLOW SPLIT	143-0	142-2		151-2		
143	61	FIXED FLOW SPLIT	98-0	143-0		152-2		
144	61	FIXED FLOW SPLIT	27-0	193-0		192-0		
145	61	FIXED FLOW SPLIT	193-0	207-0		194-0		
146	63	FIXED P.C. SPLIT	55-0	187-0		191-0		
147	63	FIXED P.C. SPLIT	418-0	197-0		223-0		
148	63	FIXED P.C. SPLIT	207-0	196-0		200-0		
150	63	FIXED P.C. SPLIT	101-0	600-0		204-0		
151	63	FIXED P.C. SPLIT	31-0	154-0		155-0		153-0
153	63	FIXED P.C. SPLIT	201-0	202-0		203-0		
155	63	FIXED P.C. SPLIT	106-0	608-0		205-0		
158	63	FIXED P.C. SPLIT	159-1	172-0		158-0		
159	63	FIXED P.C. SPLIT	612-2	159-1		177-0		
160	63	FIXED P.C. SPLIT	37-0	160-0		165-0		
161	63	FIXED P.C. SPLIT	36-0	161-0		164-0		
162	63	FIXED P.C. SPLIT	35-0	162-0		163-0		
163	63	FIXED P.C. SPLIT	45-0	173-0		174-0		

IP7019036

GEOMETRY CONFIGURATION OF MODEL

COMP NO.	COMP TYPE	COMPONENT DESCRIPTION	CONNECTING STREAM NOS. AND STREAM TYPE (NO. - TYPE) 1 IN	1 OUT	2 IN	2 OUT	3 IN	3 OUT
166	60	DEMAND SPLITTER	403-0	166-2		224-2		
167	60	DEMAND SPLITTER	402-0	167-2		170-2		
168	60	DEMAND SPLITTER	401-0	168-2		169-2		
173	61	FIXED FLOW SPLIT	85-0	182-0		48-0		
174	51	FWHT-COND. MIXER	83-0	208-0	141-0			
175	51	FWHT-COND. MIXER	417-0	227-0	214-0			
176	31	INFINITE SOURCE		214-0				
219	14	STD. FW. HEATER	155-0	225-0	450-2	226-0		
301	51	FWHT-COND. MIXER	69-0	301-0	226-0			
302	51	FWHT-COND. MIXER	301-0	302-0	21-0			
303	51	FWHT-COND. MIXER	302-0	303-0	321-0			
305	63	FIXED P.C. SPLIT	10-0	305-0		306-0		307-0
319	14	STD. FW. HEATER	153-0	319-0	999-2	321-0		
334	54	TRIPLE MIXER	19-0	334-2	225-0		319-0	
400	30	INFINITE SINK	609-0					
401	61	FIXED FLOW SPLIT	684-0	401-0		407-0		
402	61	FIXED FLOW SPLIT	171-0	402-0		408-0		
403	61	FIXED FLOW SPLIT	411-0	403-0		409-0		
404	51	FWHT-COND. MIXER	84-0	414-0	407-0			
405	51	FWHT-COND. MIXER	414-0	419-0	408-0			
406	51	FWHT-COND. MIXER	419-0	417-0	409-0			
413	61	FIXED FLOW SPLIT	187-0	413-0		421-0		
415	61	FIXED FLOW SPLIT	56-0	418-0		416-0		
416	30	INFINITE SINK	416-0					
417	30	INFINITE SINK	421-0					
450	51	FWHT-COND. MIXER	12-0	450-2	211-0			
600	50	STANDARD MIXER	600-0	199-0	61-0			
608	61	FIXED FLOW SPLIT	608-0	611-0		609-0		
609	61	FIXED FLOW SPLIT	611-0	612-2		610-0		
610	51	FWHT-COND. MIXER	126-0	613-0	610-0			
781	54	TRIPLE MIXER	90-0	781-0	49-0		44-0	
999	51	FWHT-COND. MIXER	81-2	999-2	70-0			

IP7019037

COMPONENT PROPERTIES

COMP	STREAM /PORT	FLU ID	MASS FLOW (LBM/HR)	TEMP (F)	PRESS (PSIA)	QUALITY (R HUM) (-)	ENTH (B/LB)	ENTRPY (B/LB-F)	SPEC. VOLUME (FT3/LBM)
1 TGEN	118/I	0	6704335.	998.1	2223.08	1.827	1466.2	1.54416	3.50E-01
	1/U	0	6704335.	905.6	1621.48	1.496	1427.8	1.54821	4.52E-01
3 TGEN	120/I	0	6688142.	905.6	1621.48	1.496	1427.8	1.54821	4.52E-01
	3/U	0	6165622.	786.0	1058.34	1.292	1377.3	1.55204	6.36E-01
	684/E	0	522520.	785.6	1053.05	1.291	1377.3	1.55254	6.40E-01
4 TGEN	3/I	0	6165622.	786.0	1058.34	1.292	1377.3	1.55204	6.36E-01
	4/U	0	6165622.	641.1	612.34	1.152	1314.8	1.55362	9.78E-01
5 TGEN	67/I	0	5594454.	1012.2	570.85	1.434	1525.5	1.72641	1.50E+00
	5/U	0	5594454.	927.7	415.78	1.359	1484.6	1.73188	1.94E+00
6 TGEN	68/I	0	5610646.	927.4	415.78	1.359	1484.4	1.73176	1.94E+00
	7/U	0	5362382.	798.1	258.50	1.267	1422.1	1.73585	2.84E+00
	411/E	0	248264.	813.0	255.60	1.276	1429.9	1.74328	2.91E+00
TIP LKG			31275.						
7 TGEN	7/I	0	5362382.	798.1	258.50	1.267	1422.1	1.73585	2.84E+00
	777/U	0	4905800.	640.9	136.56	1.177	1347.6	1.74161	4.71E+00
	28/E	0	456583.	640.9	136.56	1.177	1347.6	1.74161	4.71E+00
8 TGEN	127/I	0	4899678.	640.7	134.99	1.177	1347.6	1.74286	4.77E+00
	8/U	0	4741566.	505.6	68.29	1.115	1285.2	1.75624	8.30E+00
	404/E	0	158112.	530.7	67.43	1.129	1297.6	1.77035	8.63E+00
TIP LKG			31535.						
9 TGEN	8/I	0	4741566.	505.6	68.29	1.115	1285.2	1.75624	8.30E+00
	9/U	0	4406957.	428.6	44.54	1.083	1249.9	1.76461	1.17E+01
	405/E	0	334609.	438.7	43.92	1.089	1254.9	1.77173	1.20E+01
TIP LKG			47551.						
10 TGEN	9/I	0	4406957.	428.6	44.54	1.083	1249.9	1.76461	1.17E+01
	10/U	0	4236814.	230.9	13.44	1.011	1160.0	1.78059	3.02E+01
	406/E	0	170143.	253.9	13.25	1.023	1171.1	1.79802	3.18E+01
TIP LKG			21039.						
11 TGEN	307/I	0	1412130.	230.9	13.44	1.011	1160.0	1.78059	3.02E+01
	11/U	0	1358232.	169.3	5.90	0.978	1112.5	1.79680	6.16E+01
	12/E	0	53899.	168.8	5.83	0.979	1112.5	1.79808	6.23E+01

IP7019038

COMPONENT PROPERTIES

COMP	STREAM /PORT	FLU ID	MASS FLOW (LBM/HR)	TEMP (F)	PRESS (PSIA)	QUALITY (R HUM) (-)	ENTH (B/LB)	ENTRPY (B/LB-F)	SPEC. VOLUME (FT3/LBM)
12 TGEN	79/I	0	1353662.	168.4	5.78	0.978	1111.7	1.79769	6.28E+01
	16/U	0	1353662.	106.4	1.15	0.939	1045.1	1.85568	2.75E+02
13 TGEN	77/I	0	1348895.	167.1	5.61	0.977	1110.0	1.79815	6.45E+01
	13/U	0	1348895.	110.2	1.28	0.939	1046.7	1.84727	2.48E+02
14 TGEN	11/I	0	1358232.	169.3	5.90	0.978	1112.5	1.79680	6.16E+01
	14/U	0	1358232.	117.6	1.59	0.941	1051.7	1.83398	2.03E+02
15 HFRH	613/T	0	5592084.	642.0	612.34	1.153	1315.4	1.55415	9.79E-01
	15/T	0	5592084.	1012.3	570.85	1.434	1525.6	1.72642	1.50E+00
16 COND	16/S	0	1353662.	106.4	1.15	0.939	1045.1	1.85568	2.75E+02
	108/T	0	95771455.	81.0	50.00	-0.217	49.2	0.09520	1.61E-02
	781/D	0	981493.	112.1	1.36	0.143	227.9	0.40946	3.59E+01
	18/D	0	2335155.	106.4	1.15	0.000	74.5	0.14102	1.62E-02
	23/T	0	95771455.	96.4	50.00	-0.201	64.5	0.12307	1.61E-02
17 COND	13/S	0	1348895.	110.2	1.28	0.939	1046.7	1.84727	2.48E+02
	129/T	0	47878545.	80.9	50.00	-0.217	49.1	0.09496	1.61E-02
	20/D	0	1348895.	110.2	1.28	0.000	78.2	0.14759	1.62E-02
	17/T	0	47878545.	108.2	50.00	-0.188	76.4	0.14417	1.62E-02
18 COND	14/S	0	1358232.	117.6	1.59	0.941	1051.7	1.83398	2.03E+02
	23/T	0	95771455.	94.6	50.00	-0.202	62.8	0.11995	1.61E-02
	132/D	0	3835928.	140.5	11.36	-0.060	108.4	0.19929	1.63E-02
	22/D	0	5194159.	117.6	1.59	0.000	85.6	0.16060	1.62E-02
	62/T	0	95771455.	109.3	50.00	-0.187	77.4	0.14596	1.62E-02
19 FWH	154/T	0	1715628.	126.5	236.19	-0.332	95.1	0.17569	1.62E-02
	80/S	0	63659.	165.0	5.34	0.978	1110.0	1.80332	6.76E+01
	19/T	0	1715628.	162.9	236.19	-0.288	131.5	0.23579	1.64E-02
	21/D	0	63659.	162.8	5.34	-0.002	130.8	0.23586	1.64E-02
20 FWH	138/T	0	5145855.	163.3	185.49	-0.255	131.7	0.23648	1.64E-02
	406/S	0	170143.	253.6	12.73	1.024	1171.1	1.80231	3.30E+01
	149/D	0	492721.	232.0	42.72	-0.042	200.5	0.34181	1.69E-02
	24/T	0	5145855.	202.9	185.49	-0.209	171.4	0.29827	1.66E-02
	50/D	0	662864.	173.4	12.73	-0.032	141.4	0.25274	1.65E-02

IP7019039

COMPONENT PROPERTIES

COMP	STREAM /PORT	FLU ID	MASS FLOW (LBM/HR)	TEMP (F)	PRESS (PSIA)	QUALITY (R HUM) (-)	ENTH (B/LB)	ENTRPY (B/LB-F)	SPEC. VOLUME (FT3/LBM)
21 FWH	139/T	0	5145855.	202.9	185.49	-0.209	171.4	0.29827	1.66E-02
	405/S	0	334609.	438.4	42.72	1.089	1254.9	1.77474	1.24E+01
	219/D	0	158112.	281.6	67.00	-0.020	250.9	0.41216	1.73E-02
	25/T	0	5145855.	272.2	185.49	-0.126	241.5	0.39894	1.72E-02
	51/D	0	492721.	232.0	42.72	-0.042	200.5	0.34181	1.69E-02
22 FWH	140/T	0	5145855.	272.3	185.49	-0.126	241.5	0.39894	1.72E-02
	404/S	0	158112.	530.7	67.00	1.129	1297.6	1.77104	8.69E+00
	26/T	0	5145855.	303.6	185.49	-0.088	273.7	0.44198	1.75E-02
	52/D	0	158112.	281.6	67.00	-0.020	250.9	0.41216	1.73E-02
23 D-A	75/FW	0	5145855.	303.8	135.65	-0.055	273.7	0.44219	1.75E-02
	142/S	0	220577.	637.9	133.84	1.176	1346.2	1.74256	4.80E+00
	100/D	0	1335044.	362.9	253.56	-0.050	335.6	0.51970	1.81E-02
	27/D	0	6701476.	349.6	133.84	0.000	321.3	0.50272	1.80E-02
24 FWH	158/T	0	3185399.	354.7	2783.46	-1.517	330.8	0.50360	1.78E-02
	166/S	0	122411.	812.8	253.56	1.276	1429.9	1.74414	2.93E+00
	161/D	0	546374.	413.0	605.47	-0.114	389.5	0.58192	1.88E-02
	34/T	0	3185399.	404.2	2767.82	-1.309	382.6	0.56538	1.84E-02
	37/D	0	668785.	360.8	253.56	-0.053	333.3	0.51697	1.81E-02
25 FWH	172/T	0	3185399.	354.7	2783.46	-1.517	330.8	0.50360	1.78E-02
	224/S	0	125853.	812.8	253.29	1.276	1429.9	1.74426	2.94E+00
	179/D	0	540406.	411.7	606.54	-0.116	388.2	0.58039	1.88E-02
	38/T	0	3185399.	404.1	2767.82	-1.309	382.5	0.56528	1.84E-02
	45/D	0	666259.	365.0	253.29	-0.048	337.8	0.52244	1.82E-02
26 FWH	34/T	0	3185399.	404.2	2757.33	-1.291	382.5	0.56538	1.84E-02
	167/S	0	286051.	641.2	605.47	1.152	1315.4	1.55529	9.90E-01
	162/D	0	260323.	494.9	1042.87	-0.104	481.8	0.68114	2.02E-02
	32/T	0	3185399.	487.5	2741.68	-0.962	473.2	0.66558	1.98E-02
	36/D	0	546374.	413.0	605.47	-0.114	389.5	0.58192	1.88E-02
27 FWH	38/T	0	3185399.	404.1	2757.33	-1.291	382.5	0.56528	1.84E-02
	170/S	0	278209.	641.3	606.54	1.152	1315.4	1.55511	9.88E-01
	178/D	0	262197.	494.4	1043.48	-0.106	481.1	0.68044	2.02E-02
	41/T	0	3185399.	485.6	2741.68	-0.969	471.1	0.66331	1.97E-02
	40/D	0	540406.	411.7	606.54	-0.116	388.2	0.58039	1.88E-02

IP7019040

COMPONENT PROPERTIES

COMP	STREAM /PORT	FLU ID	MASS FLOW (LBM/HR)	TEMP (F)	PRESS (PSIA)	QUALITY (R HUM) (-)	ENTH (B/LB)	ENTRPY (B/LB-F)	SPEC. VOLUME (FT3/LBM)
28 FWH	32/T	0	3185399.	487.4	2735.89	-0.955	473.2	0.66558	1.98E-02
	168/S	0	260323.	784.7	1042.87	1.290	1377.3	1.55352	6.46E-01
	33/T	0	3185399.	550.0	2720.17	-0.695	546.4	0.74045	2.12E-02
	35/D	0	260323.	494.9	1042.87	-0.104	481.8	0.68114	2.02E-02
29 FWH	41/T	0	3185399.	485.5	2735.88	-0.962	471.1	0.66331	1.97E-02
	169/S	0	262197.	784.8	1043.48	1.290	1377.3	1.55346	6.46E-01
	46/T	0	3185399.	548.7	2720.16	-0.700	544.8	0.73890	2.12E-02
	39/D	0	262197.	494.4	1043.48	-0.106	481.1	0.68044	2.02E-02
30 HXGN	104/T	0	5145855.	117.8	434.94	-0.449	86.9	0.16062	1.62E-02
	210/S	0	7675.	640.4	286.80	1.165	1337.6	1.65297	2.20E+00
	30/T	0	5145855.	119.6	434.94	-0.446	88.7	0.16362	1.62E-02
	57/D	0	7675.	204.2	12.58	0.000	172.3	0.30043	1.67E-02
31 HXDC	133/T	0	5145855.	120.1	236.19	-0.339	88.7	0.16465	1.62E-02
	303/S	0	848323.	166.0	5.53	-0.000	133.9	0.24089	1.64E-02
	31/T	0	5145855.	126.5	236.19	-0.332	95.1	0.17569	1.62E-02
	49/D	0	848323.	126.9	5.53	-0.039	94.9	0.17649	1.62E-02
32 HXSP	192/T	0	0.	349.6	133.84	0.000	321.3	0.50272	1.80E-02
	55/T	0	0.	349.6	133.84	0.000	321.3	0.50272	1.80E-02
33 HXSP	194/T	0	0.	349.6	133.84	0.000	321.3	0.50272	1.80E-02
	56/T	0	0.	349.6	133.84	0.000	321.3	0.50272	1.80E-02
34 PMEL	200/I	0	3350738.	349.6	133.84	0.000	321.3	0.50272	1.80E-02
	42/U	0	3350738.	350.0	296.14	-0.087	322.0	0.50296	1.80E-02
35 PMEL	196/I	0	3350738.	349.6	133.84	0.000	321.3	0.50272	1.80E-02
	43/U	0	3350738.	350.0	296.14	-0.087	322.0	0.50296	1.80E-02
36 SFIX	199/I	0	6749780.	348.4	296.14	-0.089	320.3	0.50089	1.80E-02
	201/U	0	6749780.	348.4	296.14	-0.089	320.3	0.50089	1.80E-02
	44/B	0	0.	348.4	296.14	-0.089	320.3	0.50089	1.80E-02
37 PMST	202/IP	0	3374890.	348.4	296.14	-0.089	320.3	0.50089	1.80E-02
	152/IT	0	122603.	638.0	135.18	1.176	1346.2	1.74147	4.75E+00
	420/UP	0	3374890.	354.6	2827.74	-1.613	330.8	0.50346	1.78E-02
	63/UT	0	122603.	121.9	1.78	0.939	1052.1	1.82257	1.82E+02

IP7019041

COMPONENT PROPERTIES

COMP	STREAM /PORT	FLU ID	MASS FLOW (LBM/HR)	TEMP (F)	PRESS (PSIA)	QUALITY (R HUM) (-)	ENTH (B/LB)	ENTRPY (B/LB-F)	SPEC. VOLUME (FT3/LBM)
38 PMST	203/IP	0	3374890.	348.4	296.14	-0.089	320.3	0.50089	1.80E-02
	151/IT	0	133170.	638.0	135.18	1.176	1346.2	1.74147	4.75E+00
	76/UP	0	3374890.	354.6	2829.85	-1.618	330.8	0.50346	1.78E-02
	64/UT	0	133170.	112.1	1.35	0.966	1075.2	1.89156	2.42E+02
39 VTHR	117/I	0	6732560.	1001.2	2285.84	1.867	1466.2	1.54141	3.41E-01
	54/U	0	6732560.	998.1	2223.08	1.827	1466.2	1.54416	3.50E-01
40 M3WA	48/IA	0	5200.	652.2	339.10	1.170	1340.5	1.63789	1.87E+00
	47/IB	0	1213.	641.1	612.34	1.152	1314.8	1.55362	9.78E-01
	181/IC	0	1262.	640.9	136.56	1.177	1347.6	1.74161	4.71E+00
	210/U	0	7675.	640.4	286.80	1.165	1337.6	1.65297	2.20E+00
42 PMEL	135/I	0	2597080.	117.6	1.59	0.000	85.6	0.16060	1.62E-02
	58/U	0	2597080.	117.8	434.94	-0.449	86.9	0.16062	1.62E-02
43 PMEL	212/I	0	2597080.	117.6	1.59	0.000	85.6	0.16060	1.62E-02
	60/U	0	2597080.	117.8	434.94	-0.449	86.9	0.16062	1.62E-02
44 SFIX	213/I	0	5194159.	117.8	434.94	-0.449	86.9	0.16062	1.62E-02
	104/U	0	5145855.	117.8	434.94	-0.449	86.9	0.16062	1.62E-02
	61/B	0	48304.	117.8	434.94	-0.449	86.9	0.16062	1.62E-02
46 TGEN	305/I	0	1412554.	230.9	13.44	1.011	1160.0	1.78059	3.02E+01
	77/U	0	1348895.	167.1	5.61	0.977	1110.0	1.79815	6.45E+01
	80/E	0	63659.	166.6	5.54	0.977	1110.0	1.79943	6.53E+01
47 TGEN	306/I	0	1412130.	230.9	13.44	1.011	1160.0	1.78059	3.02E+01
	79/U	0	1353662.	168.4	5.78	0.978	1111.7	1.79769	6.28E+01
	81/E	0	58468.	167.9	5.71	0.978	1111.7	1.79898	6.35E+01
59 IPUT	59/U	0	6732560.	1001.2	2285.84	1.867	1466.2	1.54141	3.41E-01
60 SRCE	107/U	0	143650000.	72.3	50.00	-0.226	40.5	0.07899	1.61E-02
61 SPCT	107/I	0	143650000.	72.3	50.00	-0.226	40.5	0.07899	1.61E-02
	108/U	0	95771455.	72.3	50.00	-0.226	40.5	0.07899	1.61E-02
	129/B	0	47878545.	72.3	50.00	-0.226	40.5	0.07899	1.61E-02
62 MIXR	62/IA	0	95771455.	109.3	50.00	-0.187	77.4	0.14596	1.62E-02
	17/IB	0	47878545.	108.2	50.00	0.188	76.4	0.14417	1.62E-02

IP7019042

COMPONENT PROPERTIES

COMP	STREAM /PORT	FLU ID	MASS FLOW (LBM/HR)	TEMP (F)	PRESS (PSIA)	QUALITY (R HUM) (-)	ENTH (B/LB)	ENTRPY (B/LB-F)	SPEC. VOLUME (FT3/LBM)
63 SINK	105/I	0	143650000.	108.9	50.00	-0.187	77.0	0.14536	1.62E-02
64 OPUT	114/I	0	6370798.	549.3	2699.59	-0.676	545.6	0.73972	2.12E-02
65 SFIX	146/I	0	662864.	166.6	5.54	0.006	141.4	0.25283	4.76E-01
	69/U	0	658306.	166.6	5.54	0.000	134.6	0.24187	1.65E-02
	70/B	0	4558.	166.6	5.54	1.000	1132.5	1.83544	6.68E+01
66 MIXR	137/IA	0	6132662.	641.1	612.34	1.152	1314.8	1.55362	9.78E-01
	131/IB	0	23682.	998.1	2223.08	1.827	1466.2	1.54416	3.50E-01
	66/U	0	6156344.	642.0	612.34	1.153	1315.4	1.55415	9.79E-01
67 MIXR	15/IA	0	5592084.	1012.3	570.85	1.434	1525.6	1.72642	1.50E+00
	156/IB	0	2369.	998.1	2223.08	1.827	1466.2	1.54416	3.50E-01
	67/U	0	5594454.	1012.2	570.85	1.434	1525.5	1.72641	1.50E+00
68 MIXR	5/IA	0	5594454.	927.7	415.78	1.359	1484.6	1.73188	1.94E+00
	180/IB	0	16193.	905.6	1621.48	1.496	1427.8	1.54821	4.52E-01
	68/U	0	5610646.	927.4	415.78	1.359	1484.4	1.73176	1.94E+00
69 MIXR	60/IA	0	2597080.	117.8	434.94	-0.449	86.9	0.16062	1.62E-02
	58/IB	0	2597080.	117.8	434.94	-0.449	86.9	0.16062	1.62E-02
	213/U	0	5194159.	117.8	434.94	-0.449	86.9	0.16062	1.62E-02
71 MIXR	334/IA	0	5145855.	163.3	185.49	-0.255	131.7	0.23648	1.64E-02
	134/IB	0	0.	120.1	236.19	-0.339	88.7	0.16465	1.62E-02
	71/U	0	5145855.	163.3	185.49	-0.255	131.7	0.23648	1.64E-02
72 MIXR	24/IA	0	5145855.	202.9	185.49	-0.209	171.4	0.29827	1.66E-02
	144/IB	0	0.	163.3	185.49	-0.255	131.7	0.23648	1.64E-02
	72/U	0	5145855.	202.9	185.49	-0.209	171.4	0.29827	1.66E-02
73 MIXR	72/IA	0	5145855.	202.9	185.49	-0.209	171.4	0.29827	1.66E-02
	197/IB	0	0.	349.6	133.84	0.000	321.3	0.50272	1.80E-02
	73/U	0	5145855.	202.9	185.49	-0.209	171.4	0.29827	1.66E-02
74 MIXR	25/IA	0	5145855.	272.2	185.49	-0.126	241.5	0.39894	1.72E-02
	147/IB	0	0.	202.9	185.49	-0.209	171.4	0.29827	1.66E-02
	74/U	0	5145855.	272.3	185.49	-0.126	241.5	0.39894	1.72E-02

IP7019043

COMPONENT PROPERTIES

COMP	STREAM /PORT	FLU ID	MASS FLOW (LBM/HR)	TEMP (F)	PRESS (PSIA)	QUALITY (R HUM) (-)	ENTH (B/LB)	ENTRPY (B/LB-F)	SPEC. VOLUME (FT3/LBM)
75 MIXR	26/IA	0	5145855.	303.8	135.65	-0.055	273.7	0.44219	1.75E-02
	150/IB	0	0.	272.3	185.49	-0.126	241.5	0.39894	1.72E-02
	75/U	0	5145855.	303.8	135.65	-0.055	273.7	0.44219	1.75E-02
80 MX51	57/IA	0	7675.	204.2	12.58	0.000	172.3	0.30043	1.67E-02
	63/IB	0	122603.	121.9	1.78	0.939	1052.1	1.82257	1.82E+02
	83/U	0	130278.	204.2	12.58	0.849	1000.3	1.54759	2.63E+01
81 MX51	208/IA	0	134657.	199.9	11.52	0.862	1011.4	1.57251	2.90E+01
	95/IB	0	0.	389.1	419.53	-0.084	363.6	0.55258	1.85E-02
	84/U	0	134657.	199.9	11.52	0.862	1011.4	1.57251	2.90E+01
82 MX51	119/IA	0	0.	1001.2	2285.84	1.867	1466.2	1.54141	3.41E-01
	157/IB	0	2174.	998.1	2223.08	1.827	1466.2	1.54416	3.50E-01
	82/U	0	2174.	998.1	2223.08	1.827	1466.2	1.54416	3.50E-01
83 MX51	82/IA	0	2174.	998.1	2223.08	1.827	1466.2	1.54416	3.50E-01
	183/IB	0	8098.	641.1	612.34	1.152	1314.8	1.55362	9.78E-01
	86/U	0	10273.	709.0	753.65	1.209	1346.9	1.56094	8.46E-01
84 MX51	86/IA	0	10273.	709.0	753.65	1.209	1346.9	1.56094	8.46E-01
	186/IB	0	3880.	641.1	612.34	1.152	1314.8	1.55362	9.78E-01
	102/U	0	14153.	690.2	710.71	1.192	1338.1	1.55928	8.82E-01
85 MX51	102/IA	0	14153.	690.2	710.71	1.192	1338.1	1.55928	8.82E-01
	128/IB	0	4860.	640.9	136.56	1.177	1347.6	1.74161	4.71E+00
	85/U	0	19013.	652.2	339.10	1.170	1340.5	1.63789	1.87E+00
87 MX51	64/IA	0	133170.	112.1	1.35	0.966	1075.2	1.89156	2.42E+02
	220/IB	0	0.	281.6	67.00	-0.020	250.9	0.41216	1.73E-02
	87/U	0	133170.	112.1	1.35	0.966	1075.2	1.89156	2.42E+02
88 MX51	87/IA	0	133170.	112.1	1.35	0.966	1075.2	1.89156	2.42E+02
	218/IB	0	0.	232.0	42.72	-0.042	200.5	0.34181	1.69E-02
	88/U	0	133170.	112.1	1.35	0.966	1075.2	1.89156	2.42E+02
89 MX51	88/IA	0	133170.	112.1	1.35	0.966	1075.2	1.89156	2.42E+02
	145/IB	0	0.	173.4	10.00	-0.020	141.4	0.25275	1.65E-02
	89/U	0	133170.	112.1	1.35	0.966	1075.2	1.89156	2.42E+02

IP7019044

COMPONENT PROPERTIES

COMP	STREAM /PORT	FLU ID	MASS FLOW (LBM/HR)	TEMP (F)	PRESS (PSIA)	QUALITY (R HUM) (-)	ENTH (B/LB)	ENTRPY (B/LB-F)	SPEC. VOLUME (FT3/LBM)
90 MX51	89/IA	0	133170.	112.1	1.35	0.966	1075.2	1.89156	2.42E+02
	413/IB	0	0.	349.6	133.84	0.000	321.3	0.50272	1.80E-02
	90/U	0	133170.	112.1	1.35	0.966	1075.2	1.89156	2.42E+02
93 MX51	163/IA	0	0.	494.9	1042.87	-0.104	481.8	0.68114	2.02E-02
	176/IB	0	0.	494.4	1043.48	-0.106	481.1	0.68044	2.02E-02
	93/U	0	0.	494.6	1043.17	-0.105	481.4	0.68079	2.02E-02
94 M3WA	93/IA	0	0.	494.6	1043.17	-0.105	481.4	0.68079	2.02E-02
	175/IB	0	0.	411.7	606.54	-0.116	388.2	0.58039	1.88E-02
	164/IC	0	0.	413.0	605.47	-0.114	389.5	0.58192	1.88E-02
	94/U	0	0.	440.4	751.73	-0.116	419.7	0.61538	1.92E-02
95 M3WA	94/IA	0	0.	440.4	751.73	-0.116	419.7	0.61538	1.92E-02
	174/IB	0	0.	365.0	253.29	-0.048	337.8	0.52244	1.82E-02
	165/IC	0	0.	360.8	253.56	-0.053	333.3	0.51697	1.81E-02
	95/U	0	0.	389.1	419.53	-0.084	363.6	0.55258	1.85E-02
96 MX51	136/IA	0	5240.	641.1	612.34	1.152	1314.8	1.55362	9.78E-01
	130/IB	0	14528.	641.1	612.34	1.152	1314.8	1.55362	9.78E-01
	96/U	0	19768.	641.1	612.34	1.152	1314.8	1.55362	9.78E-01
97 MX51	28/IA	0	456583.	640.9	136.56	1.177	1347.6	1.74161	4.71E+00
	96/IB	0	19768.	641.1	612.34	1.152	1314.8	1.55362	9.78E-01
	97/U	0	476350.	638.2	136.56	1.176	1346.2	1.74038	4.70E+00
98 MX51	97/IA	0	476350.	638.2	136.56	1.176	1346.2	1.74038	4.70E+00
	222/IB	0	0.	1001.2	2285.84	1.867	1466.2	1.54141	3.41E-01
	98/U	0	476350.	638.2	136.56	1.176	1346.2	1.74038	4.70E+00
99 MX51	191/IA	0	0.	349.6	133.84	0.000	321.3	0.50272	1.80E-02
	223/IB	0	0.	349.6	133.84	0.000	321.3	0.50272	1.80E-02
	99/U	0	0.	349.6	133.84	0.000	321.3	0.50272	1.80E-02
100 MX51	109/IA	0	1335044.	362.9	253.56	-0.050	335.6	0.51970	1.81E-02
	99/IB	0	0.	349.6	133.84	0.000	321.3	0.50272	1.80E-02
	100/U	0	1335044.	362.9	253.56	-0.050	335.6	0.51970	1.81E-02
101 MIXR	43/IA	0	3350738.	350.0	296.14	-0.087	322.0	0.50296	1.80E-02
	42/IB	0	3350738.	350.0	296.14	-0.087	322.0	0.50296	1.80E-02
	101/U	0	6701476.	350.0	296.14	-0.087	322.0	0.50296	1.80E-02

IP7019045

COMPONENT PROPERTIES

COMP	STREAM /PORT	FLU ID	MASS FLOW (LBM/HR)	TEMP (F)	PRESS (PSIA)	QUALITY (R HUM) (-)	ENTH (B/LB)	ENTRPY (B/LB-F)	SPEC. VOLUME (FT3/LBM)
106 MIXR	420/IA	0	3374890.	354.6	2827.74	-1.613	330.8	0.50346	1.78E-02
	76/IB	0	3374890.	354.6	2829.85	-1.618	330.8	0.50346	1.78E-02
	106/U	0	6749780.	354.6	2828.79	-1.615	330.8	0.50346	1.78E-02
109 MX51	110/IA	0	1335044.	362.9	253.56	-0.050	335.6	0.51970	1.81E-02
	204/IB	0	0.	350.0	296.14	-0.087	322.0	0.50296	1.80E-02
	109/U	0	1335044.	362.9	253.56	-0.050	335.6	0.51970	1.81E-02
110 MX51	111/IA	0	1335044.	362.9	253.56	-0.050	335.6	0.51970	1.81E-02
	205/IB	0	0.	354.6	2828.79	-1.615	330.8	0.50346	1.78E-02
	110/U	0	1335044.	362.9	253.56	-0.050	335.6	0.51970	1.81E-02
111 MX51	160/IA	0	668785.	360.8	253.56	-0.053	333.3	0.51697	1.81E-02
	173/IB	0	666259.	365.0	253.29	-0.048	337.8	0.52244	1.82E-02
	111/U	0	1335044.	362.9	253.56	-0.050	335.6	0.51970	1.81E-02
114 MIXR	33/IA	0	3185399.	550.0	2720.17	-0.695	546.4	0.74045	2.12E-02
	115/IB	0	3185399.	548.7	2720.16	-0.700	544.8	0.73890	2.12E-02
	114/U	0	6370798.	549.3	2720.17	-0.697	545.6	0.73968	2.12E-02
115 MIXR	46/IA	0	3185399.	548.7	2720.16	-0.700	544.8	0.73890	2.12E-02
	177/IB	0	0.	354.7	2794.71	-1.540	330.8	0.50360	1.78E-02
	115/U	0	3185399.	548.7	2720.16	-0.700	544.8	0.73890	2.12E-02
116 SDEM	59/I	0	6732560.	1001.2	2285.84	1.867	1466.2	1.54141	3.41E-01
	116/U	0	6732560.	1001.2	2285.84	1.867	1466.2	1.54141	3.41E-01
	119/B	0	0.	1001.2	2285.84	1.867	1466.2	1.54141	3.41E-01
117 SDEM	116/I	0	6732560.	1001.2	2285.84	1.867	1466.2	1.54141	3.41E-01
	117/U	0	6732560.	1001.2	2285.84	1.867	1466.2	1.54141	3.41E-01
	222/B	0	0.	1001.2	2285.84	1.867	1466.2	1.54141	3.41E-01
118 SVSL	54/I	0	6732560.	998.1	2223.08	1.827	1466.2	1.54416	3.50E-01
	118/U	0	6704335.	998.1	2223.08	1.827	1466.2	1.54416	3.50E-01
	125/B	0	28226.	998.1	2223.08	1.827	1466.2	1.54416	3.50E-01
119 SVSL	125/I	0	28226.	998.1	2223.08	1.827	1466.2	1.54416	3.50E-01
	122/U	0	26051.	998.1	2223.08	1.827	1466.2	1.54416	3.50E-01
	157/B	0	2174.	998.1	2223.08	1.827	1466.2	1.54416	3.50E-01

IP7019046

COMPONENT PROPERTIES

COMP	STREAM /PORT	FLU ID	MASS FLOW (LBM/HR)	TEMP (F)	PRESS (PSIA)	QUALITY (R HUM) (-)	ENTH (B/LB)	ENTRPY (B/LB-F)	SPEC. VOLUME (FT3/LBM)
120 SSPL	1/I	0	6704335.	905.6	1621.48	1.496	1427.8	1.54821	4.52E-01
	120/U	0	6688142.	905.6	1621.48	1.496	1427.8	1.54821	4.52E-01
	180/B	0	16193.	905.6	1621.48	1.496	1427.8	1.54821	4.52E-01
121 SSPL	4/I	0	6165622.	641.1	612.34	1.152	1314.8	1.55362	9.78E-01
	121/U	0	6142995.	641.1	612.34	1.152	1314.8	1.55362	9.78E-01
	123/B	0	22626.	641.1	612.34	1.152	1314.8	1.55362	9.78E-01
122 SSPL	122/I	0	26051.	998.1	2223.08	1.827	1466.2	1.54416	3.50E-01
	131/U	0	23682.	998.1	2223.08	1.827	1466.2	1.54416	3.50E-01
	156/B	0	2369.	998.1	2223.08	1.827	1466.2	1.54416	3.50E-01
123 SSPL	123/I	0	22626.	641.1	612.34	1.152	1314.8	1.55362	9.78E-01
	130/U	0	14528.	641.1	612.34	1.152	1314.8	1.55362	9.78E-01
	183/B	0	8098.	641.1	612.34	1.152	1314.8	1.55362	9.78E-01
124 SSPL	121/I	0	6142995.	641.1	612.34	1.152	1314.8	1.55362	9.78E-01
	124/U	0	6133875.	641.1	612.34	1.152	1314.8	1.55362	9.78E-01
	184/B	0	9120.	641.1	612.34	1.152	1314.8	1.55362	9.78E-01
125 SSPL	184/I	0	9120.	641.1	612.34	1.152	1314.8	1.55362	9.78E-01
	136/U	0	5240.	641.1	612.34	1.152	1314.8	1.55362	9.78E-01
	186/B	0	3880.	641.1	612.34	1.152	1314.8	1.55362	9.78E-01
126 SDEM	66/I	0	6156344.	642.0	612.34	1.153	1315.4	1.55415	9.79E-01
	126/U	0	5592084.	642.0	612.34	1.153	1315.4	1.55415	9.79E-01
	171/B	0	564260.	642.0	612.34	1.153	1315.4	1.55415	9.79E-01
127 SSPL	777/I	0	4905800.	640.9	136.56	1.177	1347.6	1.74161	4.71E+00
	127/U	0	4899678.	640.9	136.56	1.177	1347.6	1.74161	4.71E+00
	148/B	0	6122.	640.9	136.56	1.177	1347.6	1.74161	4.71E+00
128 SSPL	124/I	0	6133875.	641.1	612.34	1.152	1314.8	1.55362	9.78E-01
	137/U	0	6132662.	641.1	612.34	1.152	1314.8	1.55362	9.78E-01
	47/B	0	1213.	641.1	612.34	1.152	1314.8	1.55362	9.78E-01
129 SFIX	148/I	0	6122.	640.9	136.56	1.177	1347.6	1.74161	4.71E+00
	128/U	0	4860.	640.9	136.56	1.177	1347.6	1.74161	4.71E+00
	181/B	0	1262.	640.9	136.56	1.177	1347.6	1.74161	4.71E+00

IP7019047

COMPONENT PROPERTIES

COMP	STREAM /PORT	FLU ID	MASS FLOW (LBM/HR)	TEMP (F)	PRESS (PSIA)	QUALITY (R HUM) (-)	ENTH (B/LB)	ENTRPY (B/LB-F)	SPEC. VOLUME (FT3/LBM)
131 SPCT	22/I	0	5194159.	117.6	1.59	0.000	85.6	0.16060	1.62E-02
	135/U	0	2597080.	117.6	1.59	0.000	85.6	0.16060	1.62E-02
	212/B	0	2597080.	117.6	1.59	0.000	85.6	0.16060	1.62E-02
132 MX51	215/IA	0	3684050.	107.8	1.20	-0.000	75.8	0.14347	1.62E-02
	227/IB	0	151877.	199.9	11.52	0.748	899.9	1.40349	2.52E+01
	132/U	0	3835928.	140.5	11.36	-0.060	108.4	0.19929	1.63E-02
133 SPCT	30/I	0	5145855.	120.1	236.19	-0.339	88.7	0.16465	1.62E-02
	133/U	0	5145855.	120.1	236.19	-0.339	88.7	0.16465	1.62E-02
	134/B	0	0.	120.1	236.19	-0.339	88.7	0.16465	1.62E-02
134 SPCT	71/I	0	5145855.	163.3	185.49	-0.255	131.7	0.23648	1.64E-02
	138/U	0	5145855.	163.3	185.49	-0.255	131.7	0.23648	1.64E-02
	144/B	0	0.	163.3	185.49	-0.255	131.7	0.23648	1.64E-02
135 SPCT	73/I	0	5145855.	202.9	185.49	-0.209	171.4	0.29827	1.66E-02
	139/U	0	5145855.	202.9	185.49	-0.209	171.4	0.29827	1.66E-02
	147/B	0	0.	202.9	185.49	-0.209	171.4	0.29827	1.66E-02
136 SPCT	74/I	0	5145855.	272.3	185.49	-0.126	241.5	0.39894	1.72E-02
	140/U	0	5145855.	272.3	185.49	-0.126	241.5	0.39894	1.72E-02
	150/B	0	0.	272.3	185.49	-0.126	241.5	0.39894	1.72E-02
137 SPCT	52/I	0	158112.	281.6	67.00	-0.020	250.9	0.41216	1.73E-02
	219/U	0	158112.	281.6	67.00	-0.020	250.9	0.41216	1.73E-02
	220/B	0	0.	281.6	67.00	-0.020	250.9	0.41216	1.73E-02
138 SPCT	51/I	0	492721.	232.0	42.72	-0.042	200.5	0.34181	1.69E-02
	149/U	0	492721.	232.0	42.72	-0.042	200.5	0.34181	1.69E-02
	218/B	0	0.	232.0	42.72	-0.042	200.5	0.34181	1.69E-02
139 SPCT	50/I	0	662864.	173.4	10.00	-0.020	141.4	0.25275	1.65E-02
	146/U	0	662864.	173.4	10.00	-0.020	141.4	0.25275	1.65E-02
	145/B	0	0.	173.4	10.00	-0.020	141.4	0.25275	1.65E-02
140 MX51	18/IA	0	2335155.	106.4	1.15	0.000	74.5	0.14102	1.62E-02
	20/IB	0	1348895.	110.2	1.28	0.000	78.2	0.14759	1.62E-02
	215/U	0	3684050.	107.8	1.20	-0.000	75.8	0.14347	1.62E-02

IP7019048

COMPONENT PROPERTIES

COMP	STREAM /PORT	FLU ID	MASS FLOW (LBM/HR)	TEMP (F)	PRESS (PSIA)	QUALITY (R HUM) (-)	ENTH (B/LB)	ENTRPY (B/LB-F)	SPEC. VOLUME (FT3/LBM)
141 SSSR	182/I	0	13813.	652.2	339.10	1.170	1340.5	1.63789	1.87E+00
	141/U	0	4379.	609.6	5.00	1.209	1340.5	2.09768	1.27E+02
	211/B	0	9434.	609.6	5.00	1.209	1340.5	2.09768	1.27E+02
142 SFIX	143/I	0	353747.	638.2	136.56	1.176	1346.2	1.74038	4.70E+00
	142/U	0	220577.	638.2	136.56	1.176	1346.2	1.74038	4.70E+00
	151/B	0	133170.	638.2	136.56	1.176	1346.2	1.74038	4.70E+00
143 SFIX	98/I	0	476350.	638.2	136.56	1.176	1346.2	1.74038	4.70E+00
	143/U	0	353747.	638.2	136.56	1.176	1346.2	1.74038	4.70E+00
	152/B	0	122603.	638.2	136.56	1.176	1346.2	1.74038	4.70E+00
144 SFIX	27/I	0	6701476.	349.6	133.84	0.000	321.3	0.50272	1.80E-02
	193/U	0	6701476.	349.6	133.84	0.000	321.3	0.50272	1.80E-02
	192/B	0	0.	349.6	133.84	0.000	321.3	0.50272	1.80E-02
145 SFIX	193/I	0	6701476.	349.6	133.84	0.000	321.3	0.50272	1.80E-02
	207/U	0	6701476.	349.6	133.84	0.000	321.3	0.50272	1.80E-02
	194/B	0	0.	349.6	133.84	0.000	321.3	0.50272	1.80E-02
146 SPCT	55/I	0	0.	349.6	133.84	0.000	321.3	0.50272	1.80E-02
	187/U	0	0.	349.6	133.84	0.000	321.3	0.50272	1.80E-02
	191/B	0	0.	349.6	133.84	0.000	321.3	0.50272	1.80E-02
147 SPCT	418/I	0	0.	349.6	133.84	0.000	321.3	0.50272	1.80E-02
	197/U	0	0.	349.6	133.84	0.000	321.3	0.50272	1.80E-02
	223/B	0	0.	349.6	133.84	0.000	321.3	0.50272	1.80E-02
148 SPCT	207/I	0	6701476.	349.6	133.84	0.000	321.3	0.50272	1.80E-02
	196/U	0	3350738.	349.6	133.84	0.000	321.3	0.50272	1.80E-02
	200/B	0	3350738.	349.6	133.84	0.000	321.3	0.50272	1.80E-02
150 SPCT	101/I	0	6701476.	350.0	296.14	-0.087	322.0	0.50296	1.80E-02
	600/U	0	6701476.	350.0	296.14	-0.087	322.0	0.50296	1.80E-02
	204/B	0	0.	350.0	296.14	-0.087	322.0	0.50296	1.80E-02
151 SPCT	31/I	0	5145855.	126.5	236.19	-0.332	95.1	0.17569	1.62E-02
	154/U	0	1715628.	126.5	236.19	-0.332	95.1	0.17569	1.62E-02
	155/B	0	1715114.	126.5	236.19	-0.332	95.1	0.17569	1.62E-02
	153/C	0	1715114.	126.5	236.19	-0.332	95.1	0.17569	1.62E-02

IP7019049

COMPONENT PROPERTIES

COMP	STREAM /PORT	FLU ID	MASS FLOW (LBM/HR)	TEMP (F)	PRESS (PSIA)	QUALITY (R HUM) (-)	ENTH (B/LB)	ENTRPY (B/LB-F)	SPEC. VOLUME (FT3/LBM)
153 SPCT	201/I	0	6749780.	348.4	296.14	-0.089	320.3	0.50089	1.80E-02
	202/U	0	3374890.	348.4	296.14	-0.089	320.3	0.50089	1.80E-02
	203/B	0	3374890.	348.4	296.14	-0.089	320.3	0.50089	1.80E-02
155 SPCT	106/I	0	6749780.	354.6	2828.79	-1.615	330.8	0.50346	1.78E-02
	608/U	0	6749780.	354.6	2828.79	-1.615	330.8	0.50346	1.78E-02
	205/B	0	0.	354.6	2828.79	-1.615	330.8	0.50346	1.78E-02
158 SPCT	159/I	0	6370798.	354.7	2783.46	-1.517	330.8	0.50360	1.78E-02
	172/U	0	3185399.	354.7	2783.46	-1.517	330.8	0.50360	1.78E-02
	158/B	0	3185399.	354.7	2783.46	-1.517	330.8	0.50360	1.78E-02
159 SPCT	612/I	0	6370798.	354.7	2794.71	-1.540	330.8	0.50360	1.78E-02
	159/U	0	6370798.	354.7	2794.71	-1.540	330.8	0.50360	1.78E-02
	177/B	0	0.	354.7	2794.71	-1.540	330.8	0.50360	1.78E-02
160 SPCT	37/I	0	668785.	360.8	253.56	-0.053	333.3	0.51697	1.81E-02
	160/U	0	668785.	360.8	253.56	-0.053	333.3	0.51697	1.81E-02
	165/B	0	0.	360.8	253.56	-0.053	333.3	0.51697	1.81E-02
161 SPCT	36/I	0	546374.	413.0	605.47	-0.114	389.5	0.58192	1.88E-02
	161/U	0	546374.	413.0	605.47	-0.114	389.5	0.58192	1.88E-02
	164/B	0	0.	413.0	605.47	-0.114	389.5	0.58192	1.88E-02
162 SPCT	35/I	0	260323.	494.9	1042.87	-0.104	481.8	0.68114	2.02E-02
	162/U	0	260323.	494.9	1042.87	-0.104	481.8	0.68114	2.02E-02
	163/B	0	0.	494.9	1042.87	-0.104	481.8	0.68114	2.02E-02
163 SPCT	45/I	0	666259.	365.0	253.29	-0.048	337.8	0.52244	1.82E-02
	173/U	0	666259.	365.0	253.29	-0.048	337.8	0.52244	1.82E-02
	174/B	0	0.	365.0	253.29	-0.048	337.8	0.52244	1.82E-02
164 SPCT	40/I	0	540406.	411.7	606.54	-0.116	388.2	0.58039	1.88E-02
	179/U	0	540406.	411.7	606.54	-0.116	388.2	0.58039	1.88E-02
	175/B	0	0.	411.7	606.54	-0.116	388.2	0.58039	1.88E-02
165 SPCT	39/I	0	262197.	494.4	1043.48	-0.106	481.1	0.68044	2.02E-02
	178/U	0	262197.	494.4	1043.48	-0.106	481.1	0.68044	2.02E-02
	176/B	0	0.	494.4	1043.48	-0.106	481.1	0.68044	2.02E-02

IP7019050

COMPONENT PROPERTIES

COMP	STREAM /PORT	FLU ID	MASS FLOW (LBM/HR)	TEMP (F)	PRESS (PSIA)	QUALITY (R HUM) (-)	ENTH (B/LB)	ENTRPY (B/LB-F)	SPEC. VOLUME (FT3/LBM)
166 SDEM	403/I	0	248264.	813.0	255.60	1.276	1429.9	1.74328	2.91E+00
	166/U	0	122411.	813.0	255.60	1.276	1429.9	1.74328	2.91E+00
	224/B	0	125853.	813.0	255.60	1.276	1429.9	1.74328	2.91E+00
167 SDEM	402/I	0	564260.	642.0	612.34	1.153	1315.4	1.55415	9.79E-01
	167/U	0	286051.	642.0	612.34	1.153	1315.4	1.55415	9.79E-01
	170/B	0	278209.	642.0	612.34	1.153	1315.4	1.55415	9.79E-01
168 SDEM	401/I	0	522520.	785.6	1053.05	1.291	1377.3	1.55254	6.40E-01
	168/U	0	260323.	785.6	1053.05	1.291	1377.3	1.55254	6.40E-01
	169/B	0	262197.	785.6	1053.05	1.291	1377.3	1.55254	6.40E-01
173 SFIX	85/I	0	19013.	652.2	339.10	1.170	1340.5	1.63789	1.87E+00
	182/U	0	13813.	652.2	339.10	1.170	1340.5	1.63789	1.87E+00
	48/B	0	5200.	652.2	339.10	1.170	1340.5	1.63789	1.87E+00
174 MX51	83/IA	0	130278.	204.2	12.58	0.849	1000.3	1.54759	2.63E+01
	141/IB	0	4379.	609.6	5.00	1.209	1340.5	2.09768	1.27E+02
	208/U	0	134657.	199.9	11.52	0.862	1011.4	1.57251	2.90E+01
175 MX51	417/IA	0	134657.	199.9	11.52	0.862	1011.4	1.57251	2.90E+01
	214/IB	0	17220.	60.0	15.00	-0.157	28.1	0.05561	1.60E-02
	227/U	0	151877.	199.9	11.52	0.748	899.9	1.40349	2.52E+01
176 SRCE	214/U	0	17220.	60.0	15.00	-0.157	28.1	0.05561	1.60E-02
219 FWH	155/T	0	1715114.	126.5	236.19	-0.332	95.1	0.17569	1.62E-02
	450/S	0	63332.	196.2	5.60	1.013	1146.5	1.85611	6.93E+01
	225/T	0	1715114.	164.0	236.19	-0.286	132.6	0.23756	1.64E-02
	226/D	0	63332.	164.8	5.60	-0.002	132.7	0.23898	1.64E-02
301 MX51	69/IA	0	658306.	166.6	5.54	0.000	134.6	0.24187	1.65E-02
	226/IB	0	63332.	164.8	5.60	-0.002	132.7	0.23898	1.64E-02
	301/U	0	721638.	166.4	5.55	-0.000	134.4	0.24162	1.64E-02
302 MX51	301/IA	0	721638.	166.4	5.55	-0.000	134.4	0.24162	1.64E-02
	21/IB	0	63659.	162.8	5.34	-0.002	130.8	0.23586	1.64E-02
	302/U	0	785297.	166.1	5.53	-0.000	134.1	0.24116	1.64E-02
303 MX51	302/IA	0	785297.	166.1	5.53	-0.000	134.1	0.24116	1.64E-02
	221/IB	0	63026.	162.8	5.50	-0.002	131.0	0.23761	1.64E-02

IP7019051

COMPONENT PROPERTIES

COMP	STREAM /PORT	FLU ID	MASS FLOW (LBM/HR)	TEMP (F)	PRESS (PSIA)	QUALITY (R HUM) (-)	ENTH (B/LB)	ENTRPY (B/LB-F)	SPEC. VOLUME (FT3/LBM)
305 SPCT	10/I	0	4236814.	230.9	13.44	1.011	1160.0	1.78059	3.02E+01
	305/U	0	1412554.	230.9	13.44	1.011	1160.0	1.78059	3.02E+01
	306/B	0	1412130.	230.9	13.44	1.011	1160.0	1.78059	3.02E+01
	307/C	0	1412130.	230.9	13.44	1.011	1160.0	1.78059	3.02E+01
319 FWH	153/T	0	1715114.	126.5	236.19	-0.332	95.1	0.17569	1.62E-02
	999/S	0	63026.	166.2	5.50	0.980	1113.2	1.80549	6.60E+01
	319/T	0	1715114.	162.6	236.19	-0.288	131.2	0.23535	1.64E-02
	321/D	0	63026.	163.9	5.50	-0.002	131.9	0.23761	1.64E-02
334 M3WA	19/IA	0	1715628.	162.9	236.19	-0.288	131.5	0.23579	1.64E-02
	225/IB	0	1715114.	164.0	236.19	-0.286	132.6	0.23756	1.64E-02
	319/IC	0	1715114.	162.6	236.19	-0.288	131.2	0.23535	1.64E-02
	334/U	0	5145855.	163.2	236.19	-0.287	131.7	0.23623	1.64E-02
400 SINK	609/I	0	378982.	354.6	2828.79	-1.615	330.8	0.50346	1.78E-02
401 SFIX	684/I	0	522520.	785.6	1053.05	1.291	1377.3	1.55254	6.40E-01
	401/U	0	522520.	785.6	1053.05	1.291	1377.3	1.55254	6.40E-01
	407/B	0	0.	785.6	1053.05	1.291	1377.3	1.55254	6.40E-01
402 SFIX	171/I	0	564260.	642.0	612.34	1.153	1315.4	1.55415	9.79E-01
	402/U	0	564260.	642.0	612.34	1.153	1315.4	1.55415	9.79E-01
	408/B	0	0.	642.0	612.34	1.153	1315.4	1.55415	9.79E-01
403 SFIX	411/I	0	248264.	813.0	255.60	1.276	1429.9	1.74328	2.91E+00
	403/U	0	248264.	813.0	255.60	1.276	1429.9	1.74328	2.91E+00
	409/B	0	0.	813.0	255.60	1.276	1429.9	1.74328	2.91E+00
404 MX51	84/IA	0	134657.	199.9	11.52	0.862	1011.4	1.57251	2.90E+01
	407/IB	0	0.	785.6	1053.05	1.291	1377.3	1.55254	6.40E-01
	414/U	0	134657.	199.9	11.52	0.862	1011.4	1.57251	2.90E+01
405 MX51	414/IA	0	134657.	199.9	11.52	0.862	1011.4	1.57251	2.90E+01
	408/IB	0	0.	642.0	612.34	1.153	1315.4	1.55415	9.79E-01
	419/U	0	134657.	199.9	11.52	0.862	1011.4	1.57251	2.90E+01
406 MX51	419/IA	0	134657.	199.9	11.52	0.862	1011.4	1.57251	2.90E+01
	409/IB	0	0.	813.0	255.60	1.276	1429.9	1.74328	2.91E+00
	417/U	0	134657.	199.9	11.52	0.862	1011.4	1.57251	2.90E+01

IP7019052

COMPONENT PROPERTIES

COMP	STREAM /PORT	FLU ID	MASS FLOW (LBM/HR)	TEMP (F)	PRESS (PSIA)	QUALITY (R HUM) (-)	ENTH (B/LB)	ENTRPY (B/LB-F)	SPEC. VOLUME (FT3/LBM)
413 SFIX	187/I	0	0.	349.6	133.84	0.000	321.3	0.50272	1.80E-02
	413/U	0	0.	349.6	133.84	0.000	321.3	0.50272	1.80E-02
	421/B	0	0.	349.6	133.84	0.000	321.3	0.50272	1.80E-02
415 SFIX	56/I	0	0.	349.6	133.84	0.000	321.3	0.50272	1.80E-02
	418/U	0	0.	349.6	133.84	0.000	321.3	0.50272	1.80E-02
	416/B	0	0.	349.6	133.84	0.000	321.3	0.50272	1.80E-02
416 SINK	416/I	0	0.	349.6	133.84	0.000	321.3	0.50272	1.80E-02
417 SINK	421/I	0	0.	349.6	133.84	0.000	321.3	0.50272	1.80E-02
450 MX51	12/IA	0	53899.	168.8	5.83	0.979	1112.5	1.79808	6.23E+01
	211/IB	0	9434.	609.6	5.00	1.209	1340.5	2.09768	1.27E+02
	450/U	0	63332.	196.4	5.83	1.013	1146.5	1.85168	6.66E+01
600 MIXR	600/IA	0	6701476.	350.0	296.14	-0.087	322.0	0.50296	1.80E-02
	61/IB	0	48304.	117.8	434.94	-0.449	86.9	0.16062	1.62E-02
	199/U	0	6749780.	348.4	296.14	-0.089	320.3	0.50089	1.80E-02
608 SFIX	608/I	0	6749780.	354.6	2828.79	-1.615	330.8	0.50346	1.78E-02
	611/U	0	6370798.	354.6	2828.79	-1.615	330.8	0.50346	1.78E-02
	609/B	0	378982.	354.6	2828.79	-1.615	330.8	0.50346	1.78E-02
609 SFIX	611/I	0	6370798.	354.6	2828.79	-1.615	330.8	0.50346	1.78E-02
	612/U	0	6370798.	354.6	2828.79	-1.615	330.8	0.50346	1.78E-02
	610/B	0	0.	354.6	2828.79	-1.615	330.8	0.50346	1.78E-02
610 MX51	126/IA	0	5592084.	642.0	612.34	1.153	1315.4	1.55415	9.79E-01
	610/IB	0	0.	354.6	2828.79	-1.615	330.8	0.50346	1.78E-02
	613/U	0	5592084.	642.0	612.34	1.153	1315.4	1.55415	9.79E-01
781 M3WA	90/IA	0	133170.	112.1	1.35	0.966	1075.2	1.89156	2.42E+02
	49/IB	0	848323.	126.9	5.53	-0.039	94.9	0.17649	1.62E-02
	44/IC	0	0.	348.4	296.14	-0.089	320.3	0.50089	1.80E-02
	781/U	0	981493.	112.1	1.36	0.143	227.9	0.40946	3.59E+01
999 MX51	81/IA	0	58468.	166.6	5.54	0.979	1111.7	1.80219	6.54E+01
	70/IB	0	4558.	166.6	5.54	1.000	1132.5	1.83544	6.68E+01
	999/U	0	63026.	166.6	5.54	0.980	1113.2	1.80460	6.55E+01

IP7019053

STREAM PROPERTIES

STRM NO.	STRM TYPE	COMP FRM/TO ID	FLU ID	MASS FLOW (LBM/HR)	TEMP (F)	PRESS (PSIA)	QUAL (HUM) (-)	ENTH (B/LB)	ENTRPY (B/LB-F)	SPEC. VOLUME (FT3/LBM)
1	0	1-U (+)	0	6704335.	905.6	1621.48	1.496	1427.8	1.54821	4.522E-01
		120-I (-)			905.6	1621.48	1.496	1427.8	1.54821	4.522E-01
3	0	3-U (+)	0	6165622.	786.0	1058.34	1.292	1377.3	1.55204	6.364E-01
		4-I (-)			786.0	1058.34	1.292	1377.3	1.55204	6.364E-01
4	0	4-U (+)	0	6165622.	641.1	612.34	1.152	1314.8	1.55362	9.778E-01
		121-I (-)			641.1	612.34	1.152	1314.8	1.55362	9.778E-01
5	0	5-U (+)	0	5594454.	927.7	415.78	1.359	1484.6	1.73188	1.943E+00
		68-IA(-)			927.7	415.78	1.359	1484.6	1.73188	1.943E+00
7	0	6-U (+)	0	5362382.	798.1	258.50	1.267	1422.1	1.73585	2.840E+00
		7-I (-)			798.1	258.50	1.267	1422.1	1.73585	2.840E+00
8	0	8-U (+)	0	4741566.	505.6	68.29	1.115	1285.2	1.75624	8.295E+00
		9-I (-)			505.6	68.29	1.115	1285.2	1.75624	8.295E+00
9	0	9-U (+)	0	4406957.	428.6	44.54	1.083	1249.9	1.76461	1.172E+01
		10-I (-)			428.6	44.54	1.083	1249.9	1.76461	1.172E+01
10	0	10-U (+)	0	4236814.	230.9	13.44	1.011	1160.0	1.78059	3.023E+01
		305-I (-)			230.9	13.44	1.011	1160.0	1.78059	3.023E+01
11	0	11-U (+)	0	1358232.	169.3	5.90	0.978	1112.5	1.79680	6.163E+01
		14-I (-)			169.3	5.90	0.978	1112.5	1.79680	6.163E+01
12	0	11-E (+)	0	53899.	168.8	5.83	0.979	1112.5	1.79808	6.234E+01
		450-IA(-)			168.8	5.83	0.979	1112.5	1.79808	6.234E+01
13	0	13-U (+)	0	1348895.	110.2	1.28	0.939	1046.7	1.84727	2.478E+02
		17-S (-)			110.2	1.28	0.939	1046.7	1.84727	2.478E+02
14	0	14-U (+)	0	1358232.	117.6	1.59	0.941	1051.7	1.83398	2.032E+02
		18-S (-)			117.6	1.59	0.941	1051.7	1.83398	2.032E+02
* 15	0	15-T (+)	0	5592084.	1012.3	570.85	1.434	1525.6	1.72642	1.499E+00
		67-IA(-)			1012.3	570.85	1.434	1525.6	1.72642	1.499E+00

IP7019054

STREAM PROPERTIES

STRM NO.	STRM TYPE	COMP FRM/TO ID	FLU ID	MASS FLOW (LBM/HR)	TEMP (F)	PRESS (PSIA)	QUAL (HUM) (-)	ENTH (B/LB)	ENTRPY (B/LB-F)	SPEC. VOLUME (FT3/LBM)
16	0	12-U (+)	0	1353662.	106.4	1.15	0.939	1045.1	1.85568	2.746E+02
		16-S (-)			106.4	1.15	0.939	1045.1	1.85568	2.746E+02
17	0	17-T (+)	0	47878545.	108.2	50.00	-0.188	76.4	0.14417	1.616E-02
		62-IB(-)			108.2	50.00	-0.188	76.4	0.14417	1.616E-02
18	0	16-D (+)	0	2335155.	106.4	1.15	0.000	74.5	0.14102	1.615E-02
		140-IA(-)			106.4	1.15	0.000	74.5	0.14102	1.615E-02
* 19	0	19-T (+)	0	1715628.	162.9	236.19	-0.288	131.5	0.23579	1.640E-02
		334-IA(-)			162.9	236.19	-0.288	131.5	0.23579	1.640E-02
20	0	17-D (+)	0	1348895.	110.2	1.28	0.000	78.2	0.14759	1.617E-02
		140-IB(-)			110.2	1.28	0.000	78.2	0.14759	1.617E-02
* 21	0	19-D (+)	0	63659.	162.8	5.34	-0.002	130.8	0.23586	1.641E-02
		302-IB(-)			162.8	5.34	-0.002	130.8	0.23586	1.641E-02
22	0	18-D (+)	0	5194159.	117.6	1.59	0.000	85.6	0.16060	1.620E-02
		131-I (-)			117.6	1.59	0.000	85.6	0.16060	1.620E-02
* 23	2	16-T (+)	0	95771455.	96.4	50.00	-0.201	64.5	0.12307	1.612E-02
		18-T (-)			94.6	50.00	-0.202	62.8	0.11995	1.611E-02
* 24	0	20-T (+)	0	5145855.	202.9	185.49	-0.209	171.4	0.29827	1.664E-02
		72-IA(-)			202.9	185.49	-0.209	171.4	0.29827	1.664E-02
* 25	0	21-T (+)	0	5145855.	272.2	185.49	-0.126	241.5	0.39894	1.718E-02
		74-IA(-)			272.2	185.49	-0.126	241.5	0.39894	1.718E-02
* 26	2	22-T (+)	0	5145855.	303.6	185.49	-0.088	273.7	0.44198	1.748E-02
		75-IA(-)			303.8	135.65	-0.055	273.7	0.44219	1.748E-02
27	0	23-D (+)	0	6701476.	349.6	133.84	0.000	321.3	0.50272	1.798E-02
		144-I (-)			349.6	133.84	0.000	321.3	0.50272	1.798E-02
28	0	7-E (+)	0	456583.	640.9	136.56	1.177	1347.6	1.74161	4.714E+00
		97-IA(-)			640.9	136.56	1.177	1347.6	1.74161	4.714E+00

IP7019055

STREAM PROPERTIES

STRM NO.	STRM TYPE	COMP FRM/TO ID	FLU ID	MASS FLOW (LBM/HR)	TEMP (F)	PRESS (PSIA)	QUAL (HUM) (-)	ENTH (B/LB)	ENTRPY (B/LB-F)	SPEC. VOLUME (FT3/LBM)
30	2	30-T (+)	0	5145855.	119.6	434.94	-0.446	88.7	0.16362	1.618E-02
		133-I (-)			120.1	236.19	-0.339	88.7	0.16465	1.619E-02
31	0	31-T (+)	0	5145855.	126.5	236.19	-0.332	95.1	0.17569	1.622E-02
		151-I (-)			126.5	236.19	-0.332	95.1	0.17569	1.622E-02
* 32	1	26-T (+)	0	3185399.	487.5	2741.68	-0.962	473.2	0.66558	1.976E-02
		28-T (-)			487.4	2735.89	-0.955	473.2	0.66558	1.976E-02
* 33	0	28-T (+)	0	3185399.	550.0	2720.17	-0.695	546.4	0.74045	2.120E-02
		114-IA(-)			550.0	2720.17	-0.695	546.4	0.74045	2.120E-02
* 34	1	24-T (+)	0	3185399.	404.2	2767.82	-1.309	382.6	0.56538	1.842E-02
		26-T (-)			404.2	2757.33	-1.291	382.5	0.56538	1.842E-02
* 35	0	28-D (+)	0	260323.	494.9	1042.87	-0.104	481.8	0.68114	2.024E-02
		162-I (-)			494.9	1042.87	-0.104	481.8	0.68114	2.024E-02
* 36	0	26-D (+)	0	546374.	413.0	605.47	-0.114	389.5	0.58192	1.879E-02
		161-I (-)			413.0	605.47	-0.114	389.5	0.58192	1.879E-02
* 37	0	24-D (+)	0	668785.	360.8	253.56	-0.053	333.3	0.51697	1.811E-02
		160-I (-)			360.8	253.56	-0.053	333.3	0.51697	1.811E-02
* 38	1	25-T (+)	0	3185399.	404.1	2767.82	-1.309	382.5	0.56528	1.842E-02
		27-T (-)			404.1	2757.33	-1.291	382.5	0.56528	1.842E-02
* 39	0	29-D (+)	0	262197.	494.4	1043.48	-0.106	481.1	0.68044	2.023E-02
		165-I (-)			494.4	1043.48	-0.106	481.1	0.68044	2.023E-02
* 40	0	27-D (+)	0	540406.	411.7	606.54	-0.116	388.2	0.58039	1.877E-02
		164-I (-)			411.7	606.54	-0.116	388.2	0.58039	1.877E-02
* 41	1	27-T (+)	0	3185399.	485.6	2741.68	-0.969	471.1	0.66331	1.972E-02
		29-T (-)			485.5	2735.88	-0.962	471.1	0.66331	1.972E-02
* 42	0	34-U (+)	0	3350738.	350.0	296.14	-0.087	322.0	0.50296	1.797E-02
		101-IB(-)			350.0	296.14	-0.087	322.0	0.50296	1.797E-02

IP7019056

STREAM PROPERTIES

STRM NO.	STRM TYPE	COMP FRM/TO ID	FLU ID	MASS FLOW (LBM/HR)	TEMP (F)	PRESS (PSIA)	QUAL (HUM) (-)	ENTH (B/LB)	ENTRPY (B/LB-F)	SPEC. VOLUME (FT3/LBM)
* 43	0	35-U (+)	0	3350738.	350.0	296.14	-0.087	322.0	0.50296	1.797E-02
		101-IA(-)			350.0	296.14	-0.087	322.0	0.50296	1.797E-02
44	0	36-B (+)	0	0.	348.4	296.14	-0.089	320.3	0.50089	1.795E-02
		781-IC(-)			348.4	296.14	-0.089	320.3	0.50089	1.795E-02
* 45	0	25-D (+)	0	666259.	365.0	253.29	-0.048	337.8	0.52244	1.816E-02
		163-I (-)			365.0	253.29	-0.048	337.8	0.52244	1.816E-02
* 46	0	29-T (+)	0	3185399.	548.7	2720.16	-0.700	544.8	0.73890	2.117E-02
		115-IA(-)			548.7	2720.16	-0.700	544.8	0.73890	2.117E-02
47	0	128-B (+)	0	1213.	641.1	612.34	1.152	1314.8	1.55362	9.778E-01
		40-IB(-)			641.1	612.34	1.152	1314.8	1.55362	9.778E-01
48	0	173-B (+)	0	5200.	652.2	339.10	1.170	1340.5	1.63789	1.867E+00
		40-IA(-)			652.2	339.10	1.170	1340.5	1.63789	1.867E+00
49	0	31-D (+)	0	848323.	126.9	5.53	-0.039	94.9	0.17649	1.623E-02
		781-IB(-)			126.9	5.53	-0.039	94.9	0.17649	1.623E-02
* 50	5	20-D (+)	0	662864.	173.4	12.73	-0.032	141.4	0.25274	1.647E-02
		139-I (-)			173.4	10.00	-0.020	141.4	0.25275	1.647E-02
* 51	0	21-D (+)	0	492721.	232.0	42.72	-0.042	200.5	0.34181	1.686E-02
		138-I (-)			232.0	42.72	-0.042	200.5	0.34181	1.686E-02
* 52	0	22-D (+)	0	158112.	281.6	67.00	-0.020	250.9	0.41216	1.727E-02
		137-I (-)			281.6	67.00	-0.020	250.9	0.41216	1.727E-02
54	0	39-U (+)	0	6732560.	998.1	2223.08	1.827	1466.2	1.54416	3.502E-01
		118-I (-)			998.1	2223.08	1.827	1466.2	1.54416	3.502E-01
55	0	32-T (+)	0	0.	349.6	133.84	0.000	321.3	0.50272	1.798E-02
		146-I (-)			349.6	133.84	0.000	321.3	0.50272	1.798E-02
56	0	33-T (+)	0	0.	349.6	133.84	0.000	321.3	0.50272	1.798E-02
		415-I (-)			349.6	133.84	0.000	321.3	0.50272	1.798E-02

IP7019057

STREAM PROPERTIES

STRM NO.	STRM TYPE	COMP FRM/TO ID	FLU ID	MASS FLOW (LBM/HR)	TEMP (F)	PRESS (PSIA)	QUAL (HUM) (-)	ENTH (B/LB)	ENTRPY (B/LB-F)	SPEC. VOLUME (FT3/LBM)
* 57	0	30-D (+)	0	7675.	204.2	12.58	0.000	172.3	0.30043	1.666E-02
		80-IA(-)			204.2	12.58	0.000	172.3	0.30043	1.666E-02
* 58	0	42-U (+)	0	2597080.	117.8	434.94	-0.449	86.9	0.16062	1.617E-02
		69-IB(-)			117.8	434.94	-0.449	86.9	0.16062	1.617E-02
59	0	59-U (+)	0	6732560.	1001.2	2285.84	1.867	1466.2	1.54141	3.405E-01
		116-I (-)			1001.2	2285.84	1.867	1466.2	1.54141	3.405E-01
* 60	0	43-U (+)	0	2597080.	117.8	434.94	-0.449	86.9	0.16062	1.617E-02
		69-IA(-)			117.8	434.94	-0.449	86.9	0.16062	1.617E-02
61	0	44-B (+)	0	48304.	117.8	434.94	-0.449	86.9	0.16062	1.617E-02
		600-IB(-)			117.8	434.94	-0.449	86.9	0.16062	1.617E-02
62	0	18-T (+)	0	95771455.	109.3	50.00	-0.187	77.4	0.14596	1.616E-02
		62-IA(-)			109.3	50.00	-0.187	77.4	0.14596	1.616E-02
63	0	37-UT(+)	0	122603.	121.9	1.78	0.939	1052.1	1.82257	1.816E+02
		80-IB(-)			121.9	1.78	0.939	1052.1	1.82257	1.816E+02
64	0	38-UT(+)	0	133170.	112.1	1.35	0.966	1075.2	1.89156	2.422E+02
		87-IA(-)			112.1	1.35	0.966	1075.2	1.89156	2.422E+02
66	0	66-U (+)	0	6156344.	642.0	612.34	1.153	1315.4	1.55415	9.789E-01
		126-I (-)			642.0	612.34	1.153	1315.4	1.55415	9.789E-01
67	2	67-U (+)	0	5594454.	1012.2	570.85	1.434	1525.5	1.72641	1.499E+00
		5-I (-)			1012.2	570.85	1.434	1525.5	1.72641	1.499E+00
68	0	68-U (+)	0	5610646.	927.4	415.78	1.359	1484.4	1.73176	1.943E+00
		6-I (-)			927.4	415.78	1.359	1484.4	1.73176	1.943E+00
69	0	65-U (+)	0	658306.	166.6	5.54	0.000	134.6	0.24187	1.654E-02
		301-IA(-)			166.6	5.54	0.000	134.6	0.24187	1.654E-02
70	0	65-B (+)	0	4558.	166.6	5.54	1.000	1132.5	1.83544	6.677E+01
		999-IB(-)			166.6	5.54	1.000	1132.5	1.83544	6.677E+01

IP7019058

STREAM PROPERTIES

STRM NO.	STRM TYPE	COMP FRM/TO ID	FLU ID	MASS FLOW (LBM/HR)	TEMP (F)	PRESS (PSIA)	QUAL (HUM) (-)	ENTH (B/LB)	ENTRPY (B/LB-F)	SPEC. VOLUME (FT3/LBM)
71	0	71-U (+)	0	5145855.	163.3	185.49	-0.255	131.7	0.23648	1.640E-02
		134-I (-)			163.3	185.49	-0.255	131.7	0.23648	1.640E-02
72	0	72-U (+)	0	5145855.	202.9	185.49	-0.209	171.4	0.29827	1.664E-02
		73-IA(-)			202.9	185.49	-0.209	171.4	0.29827	1.664E-02
73	0	73-U (+)	0	5145855.	202.9	185.49	-0.209	171.4	0.29827	1.664E-02
		135-I (-)			202.9	185.49	-0.209	171.4	0.29827	1.664E-02
74	0	74-U (+)	0	5145855.	272.3	185.49	-0.126	241.5	0.39894	1.718E-02
		136-I (-)			272.3	185.49	-0.126	241.5	0.39894	1.718E-02
75	0	75-U (+)	0	5145855.	303.8	135.65	-0.055	273.7	0.44219	1.748E-02
		23-FW(-)			303.8	135.65	-0.055	273.7	0.44219	1.748E-02
* 76	0	38-UP(+)	0	3374890.	354.6	2829.85	-1.618	330.8	0.50346	1.781E-02
		106-IB(-)			354.6	2829.85	-1.618	330.8	0.50346	1.781E-02
77	0	46-U (+)	0	1348895.	167.1	5.61	0.977	1110.0	1.79815	6.451E+01
		13-I (-)			167.1	5.61	0.977	1110.0	1.79815	6.451E+01
79	0	47-U (+)	0	1353662.	168.4	5.78	0.978	1111.7	1.79769	6.281E+01
		12-I (-)			168.4	5.78	0.978	1111.7	1.79769	6.281E+01
* 80	2	46-E (+)	0	63659.	166.6	5.54	0.977	1110.0	1.79943	6.526E+01
		19-S (-)			165.0	5.34	0.978	1110.0	1.80332	6.757E+01
81	2	47-E (+)	0	58468.	167.9	5.71	0.978	1111.7	1.79898	6.353E+01
		999-IA(-)			166.6	5.54	0.979	1111.7	1.80219	6.538E+01
82	0	82-U (+)	0	2174.	998.1	2223.08	1.827	1466.2	1.54416	3.502E-01
		83-IA(-)			998.1	2223.08	1.827	1466.2	1.54416	3.502E-01
83	0	80-U (+)	0	130278.	204.2	12.58	0.849	1000.3	1.54759	2.633E+01
		174-IA(-)			204.2	12.58	0.849	1000.3	1.54759	2.633E+01
84	0	81-U (+)	0	134657.	199.9	11.52	0.862	1011.4	1.57251	2.904E+01
		404-IA(-)			199.9	11.52	0.862	1011.4	1.57251	2.904E+01

IP7019059

STREAM PROPERTIES

STRM NO.	STRM TYPE	COMP FRM/TO ID	FLU ID	MASS FLOW (LBM/HR)	TEMP (F)	PRESS (PSIA)	QUAL (HUM) (-)	ENTH (B/LB)	ENTRPY (B/LB-F)	SPEC. VOLUME (FT3/LBM)
85	0	85-U (+)	0	19013.	652.2	339.10	1.170	1340.5	1.63789	1.867E+00
		173-I (-)			652.2	339.10	1.170	1340.5	1.63789	1.867E+00
86	0	83-U (+)	0	10273.	709.0	753.65	1.209	1346.9	1.56094	8.461E-01
		84-IA(-)			709.0	753.65	1.209	1346.9	1.56094	8.461E-01
87	0	87-U (+)	0	133170.	112.1	1.35	0.966	1075.2	1.89156	2.422E+02
		88-IA(-)			112.1	1.35	0.966	1075.2	1.89156	2.422E+02
88	0	88-U (+)	0	133170.	112.1	1.35	0.966	1075.2	1.89156	2.422E+02
		89-IA(-)			112.1	1.35	0.966	1075.2	1.89156	2.422E+02
89	0	89-U (+)	0	133170.	112.1	1.35	0.966	1075.2	1.89156	2.422E+02
		90-IA(-)			112.1	1.35	0.966	1075.2	1.89156	2.422E+02
90	0	90-U (+)	0	133170.	112.1	1.35	0.966	1075.2	1.89156	2.422E+02
		781-IA(-)			112.1	1.35	0.966	1075.2	1.89156	2.422E+02
93	0	93-U (+)	0	0.	494.6	1043.17	-0.105	481.4	0.68079	2.023E-02
		94-IA(-)			494.6	1043.17	-0.105	481.4	0.68079	2.023E-02
94	0	94-U (+)	0	0.	440.4	751.73	-0.116	419.7	0.61538	1.922E-02
		95-IA(-)			440.4	751.73	-0.116	419.7	0.61538	1.922E-02
95	0	95-U (+)	0	0.	389.1	419.53	-0.084	363.6	0.55258	1.846E-02
		81-IB(-)			389.1	419.53	-0.084	363.6	0.55258	1.846E-02
96	0	96-U (+)	0	19768.	641.1	612.34	1.152	1314.8	1.55362	9.778E-01
		97-IB(-)			641.1	612.34	1.152	1314.8	1.55362	9.778E-01
97	0	97-U (+)	0	476350.	638.2	136.56	1.176	1346.2	1.74038	4.702E+00
		98-IA(-)			638.2	136.56	1.176	1346.2	1.74038	4.702E+00
98	0	98-U (+)	0	476350.	638.2	136.56	1.176	1346.2	1.74038	4.702E+00
		143-I (-)			638.2	136.56	1.176	1346.2	1.74038	4.702E+00
99	0	99-U (+)	0	0.	349.6	133.84	0.000	321.3	0.50272	1.798E-02
		100-IB(-)			349.6	133.84	0.000	321.3	0.50272	1.798E-02

IP7019060

STREAM PROPERTIES

STRM NO.	STRM TYPE	COMP FRM/TO ID	FLU ID	MASS FLOW (LBM/HR)	TEMP (F)	PRESS (PSIA)	QUAL (HUM) (-)	ENTH (B/LB)	ENTRPY (B/LB-F)	SPEC. VOLUME (FT3/LBM)
100	0	100-U (+)	0	1335044.	362.9	253.56	-0.050	335.6	0.51970	1.813E-02
		23-D (-)			362.9	253.56	-0.050	335.6	0.51970	1.813E-02
101	0	101-U (+)	0	6701476.	350.0	296.14	-0.087	322.0	0.50296	1.797E-02
		150-I (-)			350.0	296.14	-0.087	322.0	0.50296	1.797E-02
102	0	84-U (+)	0	14153.	690.2	710.71	1.192	1338.1	1.55928	8.822E-01
		85-IA(-)			690.2	710.71	1.192	1338.1	1.55928	8.822E-01
104	0	44-U (+)	0	5145855.	117.8	434.94	-0.449	86.9	0.16062	1.617E-02
		30-T (-)			117.8	434.94	-0.449	86.9	0.16062	1.617E-02
105	0	62-U (+)	0	143650000.	108.9	50.00	-0.187	77.0	0.14536	1.616E-02
		63-I (-)			108.9	50.00	-0.187	77.0	0.14536	1.616E-02
106	0	106-U (+)	0	6749780.	354.6	2828.79	-1.615	330.8	0.50346	1.781E-02
		155-I (-)			354.6	2828.79	-1.615	330.8	0.50346	1.781E-02
107	0	60-U (+)	0	143650000.	72.3	50.00	-0.226	40.5	0.07899	1.605E-02
		61-I (-)			72.3	50.00	-0.226	40.5	0.07899	1.605E-02
*108	2	61-U (+)	0	95771455.	72.3	50.00	-0.226	40.5	0.07899	1.605E-02
		16-T (-)			81.0	50.00	-0.217	49.2	0.09520	1.607E-02
109	0	109-U (+)	0	1335044.	362.9	253.56	-0.050	335.6	0.51970	1.813E-02
		100-IA(-)			362.9	253.56	-0.050	335.6	0.51970	1.813E-02
110	0	110-U (+)	0	1335044.	362.9	253.56	-0.050	335.6	0.51970	1.813E-02
		109-IA(-)			362.9	253.56	-0.050	335.6	0.51970	1.813E-02
111	0	111-U (+)	0	1335044.	362.9	253.56	-0.050	335.6	0.51970	1.813E-02
		110-IA(-)			362.9	253.56	-0.050	335.6	0.51970	1.813E-02
114	1	114-U (+)	0	6370798.	549.3	2720.17	-0.697	545.6	0.73968	2.119E-02
		64-I (-)			549.3	2699.59	-0.676	545.6	0.73972	2.119E-02
115	0	115-U (+)	0	3185399.	548.7	2720.16	-0.700	544.8	0.73890	2.117E-02
		114-IB(-)			548.7	2720.16	-0.700	544.8	0.73890	2.117E-02

IP7019061

STREAM PROPERTIES

STRM NO.	STRM TYPE	COMP FRM/TO ID	FLU ID	MASS FLOW (LBM/HR)	TEMP (F)	PRESS (PSIA)	QUAL (HUM) (-)	ENTH (B/LB)	ENTRPY (B/LB-F)	SPEC. VOLUME (FT3/LBM)
116	0	116-U (+)	0	6732560.	1001.2	2285.84	1.867	1466.2	1.54141	3.405E-01
		117-I (-)			1001.2	2285.84	1.867	1466.2	1.54141	3.405E-01
117	0	117-U (+)	0	6732560.	1001.2	2285.84	1.867	1466.2	1.54141	3.405E-01
		39-I (-)			1001.2	2285.84	1.867	1466.2	1.54141	3.405E-01
118	0	118-U (+)	0	6704335.	998.1	2223.08	1.827	1466.2	1.54416	3.502E-01
		1-I (-)			998.1	2223.08	1.827	1466.2	1.54416	3.502E-01
119	0	116-B (+)	0	0.	1001.2	2285.84	1.867	1466.2	1.54141	3.405E-01
		82-IA(-)			1001.2	2285.84	1.867	1466.2	1.54141	3.405E-01
120	0	120-U (+)	0	6688142.	905.6	1621.48	1.496	1427.8	1.54821	4.522E-01
		3-I (-)			905.6	1621.48	1.496	1427.8	1.54821	4.522E-01
121	0	121-U (+)	0	6142995.	641.1	612.34	1.152	1314.8	1.55362	9.778E-01
		124-I (-)			641.1	612.34	1.152	1314.8	1.55362	9.778E-01
122	0	119-U (+)	0	26051.	998.1	2223.08	1.827	1466.2	1.54416	3.502E-01
		122-I (-)			998.1	2223.08	1.827	1466.2	1.54416	3.502E-01
123	0	121-B (+)	0	22626.	641.1	612.34	1.152	1314.8	1.55362	9.778E-01
		123-I (-)			641.1	612.34	1.152	1314.8	1.55362	9.778E-01
124	0	124-U (+)	0	6133875.	641.1	612.34	1.152	1314.8	1.55362	9.778E-01
		128-I (-)			641.1	612.34	1.152	1314.8	1.55362	9.778E-01
125	0	118-B (+)	0	28226.	998.1	2223.08	1.827	1466.2	1.54416	3.502E-01
		119-I (-)			998.1	2223.08	1.827	1466.2	1.54416	3.502E-01
126	0	126-U (+)	0	5592084.	642.0	612.34	1.153	1315.4	1.55415	9.789E-01
		610-IA(-)			642.0	612.34	1.153	1315.4	1.55415	9.789E-01
127	2	127-U (+)	0	4899678.	640.9	136.56	1.177	1347.6	1.74161	4.714E+00
		8-I (-)			640.7	134.99	1.177	1347.6	1.74286	4.769E+00
128	0	129-U (+)	0	4860.	640.9	136.56	1.177	1347.6	1.74161	4.714E+00
		85-IB(-)			640.9	136.56	1.177	1347.6	1.74161	4.714E+00

IP7019062

STREAM PROPERTIES

STRM NO.	STRM TYPE	COMP FRM/TO ID	FLU ID	MASS FLOW (LBM/HR)	TEMP (F)	PRESS (PSIA)	QUAL (HUM) (-)	ENTH (B/LB)	ENTRPY (B/LB-F)	SPEC. VOLUME (FT3/LBM)
*129	2	61-B (+)	0	47878545.	72.3	50.00	-0.226	40.5	0.07899	1.605E-02
		17-T (-)			80.9	50.00	-0.217	49.1	0.09496	1.607E-02
130	0	123-U (+)	0	14528.	641.1	612.34	1.152	1314.8	1.55362	9.778E-01
		96-IB(-)			641.1	612.34	1.152	1314.8	1.55362	9.778E-01
131	0	122-U (+)	0	23682.	998.1	2223.08	1.827	1466.2	1.54416	3.502E-01
		66-IB(-)			998.1	2223.08	1.827	1466.2	1.54416	3.502E-01
132	0	132-U (+)	0	3835928.	140.5	11.36	-0.060	108.4	0.19929	1.629E-02
		18-D (-)			140.5	11.36	-0.060	108.4	0.19929	1.629E-02
133	0	133-U (+)	0	5145855.	120.1	236.19	-0.339	88.7	0.16465	1.619E-02
		31-T (-)			120.1	236.19	-0.339	88.7	0.16465	1.619E-02
134	0	133-B (+)	0	0.	120.1	236.19	-0.339	88.7	0.16465	1.619E-02
		71-IB(-)			120.1	236.19	-0.339	88.7	0.16465	1.619E-02
135	0	131-U (+)	0	2597080.	117.6	1.59	0.000	85.6	0.16060	1.620E-02
		42-I (-)			117.6	1.59	0.000	85.6	0.16060	1.620E-02
136	0	125-U (+)	0	5240.	641.1	612.34	1.152	1314.8	1.55362	9.778E-01
		96-IA(-)			641.1	612.34	1.152	1314.8	1.55362	9.778E-01
137	0	128-U (+)	0	6132662.	641.1	612.34	1.152	1314.8	1.55362	9.778E-01
		66-IA(-)			641.1	612.34	1.152	1314.8	1.55362	9.778E-01
138	0	134-U (+)	0	5145855.	163.3	185.49	-0.255	131.7	0.23648	1.640E-02
		20-T (-)			163.3	185.49	-0.255	131.7	0.23648	1.640E-02
139	0	135-U (+)	0	5145855.	202.9	185.49	-0.209	171.4	0.29827	1.664E-02
		21-T (-)			202.9	185.49	-0.209	171.4	0.29827	1.664E-02
140	0	136-U (+)	0	5145855.	272.3	185.49	-0.126	241.5	0.39894	1.718E-02
		22-T (-)			272.3	185.49	-0.126	241.5	0.39894	1.718E-02
141	0	141-U (+)	0	4379.	609.6	5.00	1.209	1340.5	2.09768	1.273E+02
		174-IB(-)			609.6	5.00	1.209	1340.5	2.09768	1.273E+02

IP7019063

STREAM PROPERTIES

STRM NO.	STRM TYPE	COMP FRM/TO ID	FLU ID	MASS FLOW (LBM/HR)	TEMP (F)	PRESS (PSIA)	QUAL (HUM) (-)	ENTH (B/LB)	ENTRPY (B/LB-F)	SPEC. VOLUME (FT3/LBM)
*142	2	142-U (+)	0	220577.	638.2	136.56	1.176	1346.2	1.74038	4.702E+00
		23-S (-)			637.9	133.84	1.176	1346.2	1.74256	4.798E+00
143	0	143-U (+)	0	353747.	638.2	136.56	1.176	1346.2	1.74038	4.702E+00
		142-I (-)			638.2	136.56	1.176	1346.2	1.74038	4.702E+00
144	0	134-B (+)	0	0.	163.3	185.49	-0.255	131.7	0.23648	1.640E-02
		72-IB(-)			163.3	185.49	-0.255	131.7	0.23648	1.640E-02
145	0	139-B (+)	0	0.	173.4	10.00	-0.020	141.4	0.25275	1.647E-02
		89-IB(-)			173.4	10.00	-0.020	141.4	0.25275	1.647E-02
*146	5	139-U (+)	0	662864.	173.4	10.00	-0.020	141.4	0.25275	1.647E-02
		65-I (-)			166.6	5.54	0.006	141.4	0.25283	4.755E-01
147	0	135-B (+)	0	0.	202.9	185.49	-0.209	171.4	0.29827	1.664E-02
		74-IB(-)			202.9	185.49	-0.209	171.4	0.29827	1.664E-02
148	0	127-B (+)	0	6122.	640.9	136.56	1.177	1347.6	1.74161	4.714E+00
		129-I (-)			640.9	136.56	1.177	1347.6	1.74161	4.714E+00
149	0	138-U (+)	0	492721.	232.0	42.72	-0.042	200.5	0.34181	1.686E-02
		20-D (-)			232.0	42.72	-0.042	200.5	0.34181	1.686E-02
150	0	136-B (+)	0	0.	272.3	185.49	-0.126	241.5	0.39894	1.718E-02
		75-IB(-)			272.3	185.49	-0.126	241.5	0.39894	1.718E-02
151	2	142-B (+)	0	133170.	638.2	136.56	1.176	1346.2	1.74038	4.702E+00
		38-IT(-)			638.0	135.18	1.176	1346.2	1.74147	4.750E+00
152	2	143-B (+)	0	122603.	638.2	136.56	1.176	1346.2	1.74038	4.702E+00
		37-IT(-)			638.0	135.18	1.176	1346.2	1.74147	4.750E+00
153	0	151-C (+)	0	1715114.	126.5	236.19	-0.332	95.1	0.17569	1.622E-02
		319-T (-)			126.5	236.19	-0.332	95.1	0.17569	1.622E-02
154	0	151-U (+)	0	1715628.	126.5	236.19	-0.332	95.1	0.17569	1.622E-02
		19-T (-)			126.5	236.19	-0.332	95.1	0.17569	1.622E-02

IP7019064

STREAM PROPERTIES

STRM NO.	STRM TYPE	COMP FRM/TO ID	FLU ID	MASS FLOW (LBM/HR)	TEMP (F)	PRESS (PSIA)	QUAL (HUM) (-)	ENTH (B/LB)	ENTRPY (B/LB-F)	SPEC. VOLUME (FT3/LBM)
155	0	151-B (+)	0	1715114.	126.5	236.19	-0.332	95.1	0.17569	1.622E-02
		219-T (-)			126.5	236.19	-0.332	95.1	0.17569	1.622E-02
156	0	122-B (+)	0	2369.	998.1	2223.08	1.827	1466.2	1.54416	3.502E-01
		67-IB(-)			998.1	2223.08	1.827	1466.2	1.54416	3.502E-01
157	0	119-B (+)	0	2174.	998.1	2223.08	1.827	1466.2	1.54416	3.502E-01
		82-IB(-)			998.1	2223.08	1.827	1466.2	1.54416	3.502E-01
158	0	158-B (+)	0	3185399.	354.7	2783.46	-1.517	330.8	0.50360	1.781E-02
		24-T (-)			354.7	2783.46	-1.517	330.8	0.50360	1.781E-02
159	1	159-U (+)	0	6370798.	354.7	2794.71	-1.540	330.8	0.50360	1.781E-02
		158-I (-)			354.7	2783.46	-1.517	330.8	0.50360	1.781E-02
160	0	160-U (+)	0	668785.	360.8	253.56	-0.053	333.3	0.51697	1.811E-02
		111-IA(-)			360.8	253.56	-0.053	333.3	0.51697	1.811E-02
161	0	161-U (+)	0	546374.	413.0	605.47	-0.114	389.5	0.58192	1.879E-02
		24-D (-)			413.0	605.47	-0.114	389.5	0.58192	1.879E-02
162	0	162-U (+)	0	260323.	494.9	1042.87	-0.104	481.8	0.68114	2.024E-02
		26-D (-)			494.9	1042.87	-0.104	481.8	0.68114	2.024E-02
163	0	162-B (+)	0	0.	494.9	1042.87	-0.104	481.8	0.68114	2.024E-02
		93-IA(-)			494.9	1042.87	-0.104	481.8	0.68114	2.024E-02
164	0	161-B (+)	0	0.	413.0	605.47	-0.114	389.5	0.58192	1.879E-02
		94-IC(-)			413.0	605.47	-0.114	389.5	0.58192	1.879E-02
165	0	160-B (+)	0	0.	360.8	253.56	-0.053	333.3	0.51697	1.811E-02
		95-IC(-)			360.8	253.56	-0.053	333.3	0.51697	1.811E-02
*166	2	166-U (+)	0	122411.	813.0	255.60	1.276	1429.9	1.74328	2.909E+00
		24-S (-)			812.8	253.56	1.276	1429.9	1.74414	2.932E+00
*167	2	167-U (+)	0	286051.	642.0	612.34	1.153	1315.4	1.55415	9.789E-01
		26-S (-)			641.2	605.47	1.152	1315.4	1.55529	9.901E-01

IP7019065

STREAM PROPERTIES

STRM NO.	STRM TYPE	COMP FRM/TO ID	FLU ID	MASS FLOW (LBM/HR)	TEMP (F)	PRESS (PSIA)	QUAL (HUM) (-)	ENTH (B/LB)	ENTRPY (B/LB-F)	SPEC. VOLUME (FT3/LBM)
*168	2	168-U (+)	0	260323.	785.6	1053.05	1.291	1377.3	1.55254	6.396E-01
		28-S (-)			784.7	1042.87	1.290	1377.3	1.55352	6.459E-01
*169	2	168-B (+)	0	262197.	785.6	1053.05	1.291	1377.3	1.55254	6.396E-01
		29-S (-)			784.8	1043.48	1.290	1377.3	1.55346	6.455E-01
*170	2	167-B (+)	0	278209.	642.0	612.34	1.153	1315.4	1.55415	9.789E-01
		27-S (-)			641.3	606.54	1.152	1315.4	1.55511	9.884E-01
171	0	126-B (+)	0	564260.	642.0	612.34	1.153	1315.4	1.55415	9.789E-01
		402-I (-)			642.0	612.34	1.153	1315.4	1.55415	9.789E-01
172	0	158-U (+)	0	3185399.	354.7	2783.46	-1.517	330.8	0.50360	1.781E-02
		25-T (-)			354.7	2783.46	-1.517	330.8	0.50360	1.781E-02
173	0	163-U (+)	0	666259.	365.0	253.29	-0.048	337.8	0.52244	1.816E-02
		111-IB(-)			365.0	253.29	-0.048	337.8	0.52244	1.816E-02
174	0	163-B (+)	0	0.	365.0	253.29	-0.048	337.8	0.52244	1.816E-02
		95-IB(-)			365.0	253.29	-0.048	337.8	0.52244	1.816E-02
175	0	164-B (+)	0	0.	411.7	606.54	-0.116	388.2	0.58039	1.877E-02
		94-IB(-)			411.7	606.54	-0.116	388.2	0.58039	1.877E-02
176	0	165-B (+)	0	0.	494.4	1043.48	-0.106	481.1	0.68044	2.023E-02
		93-IB(-)			494.4	1043.48	-0.106	481.1	0.68044	2.023E-02
177	0	159-B (+)	0	0.	354.7	2794.71	-1.540	330.8	0.50360	1.781E-02
		115-IB(-)			354.7	2794.71	-1.540	330.8	0.50360	1.781E-02
178	0	165-U (+)	0	262197.	494.4	1043.48	-0.106	481.1	0.68044	2.023E-02
		27-D (-)			494.4	1043.48	-0.106	481.1	0.68044	2.023E-02
179	0	164-U (+)	0	540406.	411.7	606.54	-0.116	388.2	0.58039	1.877E-02
		25-D (-)			411.7	606.54	-0.116	388.2	0.58039	1.877E-02
180	0	120-B (+)	0	16193.	905.6	1621.48	1.496	1427.8	1.54821	4.522E-01
		68-IB(-)			905.6	1621.48	1.496	1427.8	1.54821	4.522E-01

IP7019066

STREAM PROPERTIES

STRM NO.	STRM TYPE	COMP FRM/TO ID	FLU ID	MASS FLOW (LBM/HR)	TEMP (F)	PRESS (PSIA)	QUAL (HUM) (-)	ENTH (B/LB)	ENTRPY (B/LB-F)	SPEC. VOLUME (FT3/LBM)
181	0	129-B (+)	0	1262.	640.9	136.56	1.177	1347.6	1.74161	4.714E+00
		40-IC(-)			640.9	136.56	1.177	1347.6	1.74161	4.714E+00
182	0	173-U (+)	0	13813.	652.2	339.10	1.170	1340.5	1.63789	1.867E+00
		141-I (-)			652.2	339.10	1.170	1340.5	1.63789	1.867E+00
183	0	123-B (+)	0	8098.	641.1	612.34	1.152	1314.8	1.55362	9.778E-01
		83-IB(-)			641.1	612.34	1.152	1314.8	1.55362	9.778E-01
184	0	124-B (+)	0	9120.	641.1	612.34	1.152	1314.8	1.55362	9.778E-01
		125-I (-)			641.1	612.34	1.152	1314.8	1.55362	9.778E-01
186	0	125-B (+)	0	3880.	641.1	612.34	1.152	1314.8	1.55362	9.778E-01
		84-IB(-)			641.1	612.34	1.152	1314.8	1.55362	9.778E-01
187	0	146-U (+)	0	0.	349.6	133.84	0.000	321.3	0.50272	1.798E-02
		413-I (-)			349.6	133.84	0.000	321.3	0.50272	1.798E-02
191	0	146-B (+)	0	0.	349.6	133.84	0.000	321.3	0.50272	1.798E-02
		99-IA(-)			349.6	133.84	0.000	321.3	0.50272	1.798E-02
192	0	144-B (+)	0	0.	349.6	133.84	0.000	321.3	0.50272	1.798E-02
		32-T (-)			349.6	133.84	0.000	321.3	0.50272	1.798E-02
193	0	144-U (+)	0	6701476.	349.6	133.84	0.000	321.3	0.50272	1.798E-02
		145-I (-)			349.6	133.84	0.000	321.3	0.50272	1.798E-02
194	0	145-B (+)	0	0.	349.6	133.84	0.000	321.3	0.50272	1.798E-02
		33-T (-)			349.6	133.84	0.000	321.3	0.50272	1.798E-02
196	0	148-U (+)	0	3350738.	349.6	133.84	0.000	321.3	0.50272	1.798E-02
		35-I (-)			349.6	133.84	0.000	321.3	0.50272	1.798E-02
197	0	147-U (+)	0	0.	349.6	133.84	0.000	321.3	0.50272	1.798E-02
		73-IB(-)			349.6	133.84	0.000	321.3	0.50272	1.798E-02
199	0	600-U (+)	0	6749780.	348.4	296.14	-0.089	320.3	0.50089	1.795E-02
		36-I (-)			348.4	296.14	-0.089	320.3	0.50089	1.795E-02

IP7019067

STREAM PROPERTIES

STRM NO.	STRM TYPE	COMP FRM/TO ID	FLU ID	MASS FLOW (LBM/HR)	TEMP (F)	PRESS (PSIA)	QUAL (HUM) (-)	ENTH (B/LB)	ENTRPY (B/LB-F)	SPEC. VOLUME (FT3/LBM)
200	0	148-B (+)	0	3350738.	349.6	133.84	0.000	321.3	0.50272	1.798E-02
		34-I (-)			349.6	133.84	0.000	321.3	0.50272	1.798E-02
201	0	36-U (+)	0	6749780.	348.4	296.14	-0.089	320.3	0.50089	1.795E-02
		153-I (-)			348.4	296.14	-0.089	320.3	0.50089	1.795E-02
202	0	153-U (+)	0	3374890.	348.4	296.14	-0.089	320.3	0.50089	1.795E-02
		37-IP(-)			348.4	296.14	-0.089	320.3	0.50089	1.795E-02
203	0	153-B (+)	0	3374890.	348.4	296.14	-0.089	320.3	0.50089	1.795E-02
		38-IP(-)			348.4	296.14	-0.089	320.3	0.50089	1.795E-02
204	0	150-B (+)	0	0.	350.0	296.14	-0.087	322.0	0.50296	1.797E-02
		109-IB(-)			350.0	296.14	-0.087	322.0	0.50296	1.797E-02
205	0	155-B (+)	0	0.	354.6	2828.79	-1.615	330.8	0.50346	1.781E-02
		110-IB(-)			354.6	2828.79	-1.615	330.8	0.50346	1.781E-02
207	0	145-U (+)	0	6701476.	349.6	133.84	0.000	321.3	0.50272	1.798E-02
		148-I (-)			349.6	133.84	0.000	321.3	0.50272	1.798E-02
208	0	174-U (+)	0	134657.	199.9	11.52	0.862	1011.4	1.57251	2.904E+01
		81-IA(-)			199.9	11.52	0.862	1011.4	1.57251	2.904E+01
210	0	40-U (+)	0	7675.	640.4	286.80	1.165	1337.6	1.65297	2.197E+00
		30-S (-)			640.4	286.80	1.165	1337.6	1.65297	2.197E+00
211	0	141-B (+)	0	9434.	609.6	5.00	1.209	1340.5	2.09768	1.273E+02
		450-IB(-)			609.6	5.00	1.209	1340.5	2.09768	1.273E+02
212	0	131-B (+)	0	2597080.	117.6	1.59	0.000	85.6	0.16060	1.620E-02
		43-I (-)			117.6	1.59	0.000	85.6	0.16060	1.620E-02
213	0	69-U (+)	0	5194159.	117.8	434.94	-0.449	86.9	0.16062	1.617E-02
		44-I (-)			117.8	434.94	-0.449	86.9	0.16062	1.617E-02
214	0	176-U (+)	0	17220.	60.0	15.00	-0.157	28.1	0.05561	1.603E-02
		175-IB(-)			60.0	15.00	-0.157	28.1	0.05561	1.603E-02

IP7019068

STREAM PROPERTIES

STRM NO.	STRM TYPE	COMP FRM/TO ID	FLU ID	MASS FLOW (LBM/HR)	TEMP (F)	PRESS (PSIA)	QUAL (HUM) (-)	ENTH (B/LB)	ENTRPY (B/LB-F)	SPEC. VOLUME (FT3/LBM)
215	0	140-U (+)	0	3684050.	107.8	1.20	-0.000	75.8	0.14347	1.616E-02
		132-IA(-)			107.8	1.20	-0.000	75.8	0.14347	1.616E-02
218	0	138-B (+)	0	0.	232.0	42.72	-0.042	200.5	0.34181	1.686E-02
		88-IB(-)			232.0	42.72	-0.042	200.5	0.34181	1.686E-02
219	0	137-U (+)	0	158112.	281.6	67.00	-0.020	250.9	0.41216	1.727E-02
		21-D (-)			281.6	67.00	-0.020	250.9	0.41216	1.727E-02
220	0	137-B (+)	0	0.	281.6	67.00	-0.020	250.9	0.41216	1.727E-02
		87-IB(-)			281.6	67.00	-0.020	250.9	0.41216	1.727E-02
222	0	117-B (+)	0	0.	1001.2	2285.84	1.867	1466.2	1.54141	3.405E-01
		98-IB(-)			1001.2	2285.84	1.867	1466.2	1.54141	3.405E-01
223	0	147-B (+)	0	0.	349.6	133.84	0.000	321.3	0.50272	1.798E-02
		99-IB(-)			349.6	133.84	0.000	321.3	0.50272	1.798E-02
*224	2	166-B (+)	0	125853.	813.0	255.60	1.276	1429.9	1.74328	2.909E+00
		25-S (-)			812.8	253.29	1.276	1429.9	1.74426	2.935E+00
*225	0	219-T (+)	0	1715114.	164.0	236.19	-0.286	132.6	0.23756	1.640E-02
		334-IB(-)			164.0	236.19	-0.286	132.6	0.23756	1.640E-02
*226	0	219-D (+)	0	63332.	164.8	5.60	-0.002	132.7	0.23898	1.642E-02
		301-IB(-)			164.8	5.60	-0.002	132.7	0.23898	1.642E-02
227	0	175-U (+)	0	151877.	199.9	11.52	0.748	899.9	1.40349	2.520E+01
		132-IB(-)			199.9	11.52	0.748	899.9	1.40349	2.520E+01
301	0	301-U (+)	0	721638.	166.4	5.55	-0.000	134.4	0.24162	1.643E-02
		302-IA(-)			166.4	5.55	-0.000	134.4	0.24162	1.643E-02
302	0	302-U (+)	0	785297.	166.1	5.53	-0.000	134.1	0.24116	1.643E-02
		303-IA(-)			166.1	5.53	-0.000	134.1	0.24116	1.643E-02
303	0	303-U (+)	0	848323.	166.0	5.53	-0.000	133.9	0.24089	1.643E-02
		31-S (-)			166.0	5.53	-0.000	133.9	0.24089	1.643E-02

IP7019069

STREAM PROPERTIES

STRM NO.	STRM TYPE	COMP FRM/TO ID	FLU ID	MASS FLOW (LBM/HR)	TEMP (F)	PRESS (PSIA)	QUAL (HUM) (-)	ENTH (B/LB)	ENTRPY (B/LB-F)	SPEC. VOLUME (FT3/LBM)
305	0	305-U (+)	0	1412554.	230.9	13.44	1.011	1160.0	1.78059	3.023E+01
		46-I (-)			230.9	13.44	1.011	1160.0	1.78059	3.023E+01
306	0	305-B (+)	0	1412130.	230.9	13.44	1.011	1160.0	1.78059	3.023E+01
		47-I (-)			230.9	13.44	1.011	1160.0	1.78059	3.023E+01
307	0	305-C (+)	0	1412130.	230.9	13.44	1.011	1160.0	1.78059	3.023E+01
		11-I (-)			230.9	13.44	1.011	1160.0	1.78059	3.023E+01
*319	0	319-T (+)	0	1715114.	162.6	236.19	-0.288	131.2	0.23535	1.640E-02
		334-IC(-)			162.6	236.19	-0.288	131.2	0.23535	1.640E-02
*321	0	319-D (+)	0	63026.	163.9	5.50	-0.002	131.9	0.23761	1.641E-02
		303-IB(-)			163.9	5.50	-0.002	131.9	0.23761	1.641E-02
334	2	334-U (+)	0	5145855.	163.2	236.19	-0.287	131.7	0.23623	1.640E-02
		71-IA(-)			163.3	185.49	-0.255	131.7	0.23648	1.640E-02
401	0	401-U (+)	0	522520.	785.6	1053.05	1.291	1377.3	1.55254	6.396E-01
		168-I (-)			785.6	1053.05	1.291	1377.3	1.55254	6.396E-01
402	0	402-U (+)	0	564260.	642.0	612.34	1.153	1315.4	1.55415	9.789E-01
		167-I (-)			642.0	612.34	1.153	1315.4	1.55415	9.789E-01
403	0	403-U (+)	0	248264.	813.0	255.60	1.276	1429.9	1.74328	2.909E+00
		166-I (-)			813.0	255.60	1.276	1429.9	1.74328	2.909E+00
*404	2	8-E (+)	0	158112.	530.7	67.43	1.129	1297.6	1.77035	8.634E+00
		22-S (-)			530.7	67.00	1.129	1297.6	1.77104	8.689E+00
*405	2	9-E (+)	0	334609.	438.7	43.92	1.089	1254.9	1.77173	1.203E+01
		21-S (-)			438.4	42.72	1.089	1254.9	1.77474	1.237E+01
*406	2	10-E (+)	0	170143.	253.9	13.25	1.023	1171.1	1.79802	3.176E+01
		20-S (-)			253.6	12.73	1.024	1171.1	1.80231	3.304E+01
407	0	401-B (+)	0	0.	785.6	1053.05	1.291	1377.3	1.55254	6.396E-01
		404-IB(-)			785.6	1053.05	1.291	1377.3	1.55254	6.396E-01

IP7019070

STREAM PROPERTIES

STRM NO.	STRM TYPE	COMP FRM/TO ID	FLU ID	MASS FLOW (LBM/HR)	TEMP (F)	PRESS (PSIA)	QUAL (HUM) (-)	ENTH (B/LB)	ENTRPY (B/LB-F)	SPEC. VOLUME (FT3/LBM)
408	0	402-B (+)	0	0.	642.0	612.34	1.153	1315.4	1.55415	9.789E-01
		405-IB(-)			642.0	612.34	1.153	1315.4	1.55415	9.789E-01
409	0	403-B (+)	0	0.	813.0	255.60	1.276	1429.9	1.74328	2.909E+00
		406-IB(-)			813.0	255.60	1.276	1429.9	1.74328	2.909E+00
411	0	6-E (+)	0	248264.	813.0	255.60	1.276	1429.9	1.74328	2.909E+00
		403-I (-)			813.0	255.60	1.276	1429.9	1.74328	2.909E+00
413	0	413-U (+)	0	0.	349.6	133.84	0.000	321.3	0.50272	1.798E-02
		90-IB(-)			349.6	133.84	0.000	321.3	0.50272	1.798E-02
414	0	404-U (+)	0	134657.	199.9	11.52	0.862	1011.4	1.57251	2.904E+01
		405-IA(-)			199.9	11.52	0.862	1011.4	1.57251	2.904E+01
416	0	415-B (+)	0	0.	349.6	133.84	0.000	321.3	0.50272	1.798E-02
		416-I (-)			349.6	133.84	0.000	321.3	0.50272	1.798E-02
417	0	406-U (+)	0	134657.	199.9	11.52	0.862	1011.4	1.57251	2.904E+01
		175-IA(-)			199.9	11.52	0.862	1011.4	1.57251	2.904E+01
418	0	415-U (+)	0	0.	349.6	133.84	0.000	321.3	0.50272	1.798E-02
		147-I (-)			349.6	133.84	0.000	321.3	0.50272	1.798E-02
419	0	405-U (+)	0	134657.	199.9	11.52	0.862	1011.4	1.57251	2.904E+01
		406-IA(-)			199.9	11.52	0.862	1011.4	1.57251	2.904E+01
*420	0	37-UP(+)	0	3374890.	354.6	2827.74	-1.613	330.8	0.50346	1.781E-02
		106-IA(-)			354.6	2827.74	-1.613	330.8	0.50346	1.781E-02
421	0	413-B (+)	0	0.	349.6	133.84	0.000	321.3	0.50272	1.798E-02
		417-I (-)			349.6	133.84	0.000	321.3	0.50272	1.798E-02
*450	2	450-U (+)	0	63332.	196.4	5.83	1.013	1146.5	1.85168	6.659E+01
		219-S (-)			196.2	5.60	1.013	1146.5	1.85611	6.933E+01
600	0	150-U (+)	0	6701476.	350.0	296.14	-0.087	322.0	0.50296	1.797E-02
		600-IA(-)			350.0	296.14	-0.087	322.0	0.50296	1.797E-02

IP7019071

STREAM PROPERTIES

STRM NO.	STRM TYPE	COMP FRM/TO ID	FLU ID	MASS FLOW (LBM/HR)	TEMP (F)	PRESS (PSIA)	QUAL (HUM) (-)	ENTH (B/LB)	ENTRPY (B/LB-F)	SPEC. VOLUME (FT3/LBM)
608	0	155-U (+)	0	6749780.	354.6	2828.79	-1.615	330.8	0.50346	1.781E-02
		608-I (-)			354.6	2828.79	-1.615	330.8	0.50346	1.781E-02
609	0	608-B (+)	0	378982.	354.6	2828.79	-1.615	330.8	0.50346	1.781E-02
		400-I (-)			354.6	2828.79	-1.615	330.8	0.50346	1.781E-02
610	0	609-B (+)	0	0.	354.6	2828.79	-1.615	330.8	0.50346	1.781E-02
		610-IB(-)			354.6	2828.79	-1.615	330.8	0.50346	1.781E-02
611	0	608-U (+)	0	6370798.	354.6	2828.79	-1.615	330.8	0.50346	1.781E-02
		609-I (-)			354.6	2828.79	-1.615	330.8	0.50346	1.781E-02
612	2	609-U (+)	0	6370798.	354.6	2828.79	-1.615	330.8	0.50346	1.781E-02
		159-I (-)			354.7	2794.71	-1.540	330.8	0.50360	1.781E-02
613	0	610-U (+)	0	5592084.	642.0	612.34	1.153	1315.4	1.55415	9.789E-01
		15-T (-)			642.0	612.34	1.153	1315.4	1.55415	9.789E-01
684	0	3-E (+)	0	522520.	785.6	1053.05	1.291	1377.3	1.55254	6.396E-01
		401-I (-)			785.6	1053.05	1.291	1377.3	1.55254	6.396E-01
777	0	7-U (+)	0	4905800.	640.9	136.56	1.177	1347.6	1.74161	4.714E+00
		127-I (-)			640.9	136.56	1.177	1347.6	1.74161	4.714E+00
781	0	781-U (+)	0	981493.	112.1	1.36	0.143	227.9	0.40946	3.595E+01
		16-D (-)			112.1	1.36	0.143	227.9	0.40946	3.595E+01
*999	2	999-U (+)	0	63026.	166.6	5.54	0.980	1113.2	1.80460	6.548E+01
		319-S (-)			166.2	5.50	0.980	1113.2	1.80549	6.600E+01

(+) INDICATES STREAM START CONNECTION, (-) INDICATES STREAM END CONNECTION.

* INDICATES STREAM AFFECTED BY ENTRY OF TEST DATA.

IP70190072

STREAM TRANSPORT PROPERTIES

STRM NO.	SPEC.HT. (BTU/LBM-F)	VISCOSITY (LBM/FT-HR)	THERM COND (BTU/HR-FT-F)
1	6.441E-01	6.859E-02	4.346E-02
	6.441E-01	6.859E-02	4.346E-02
3	6.274E-01	6.106E-02	3.712E-02
	6.274E-01	6.106E-02	3.712E-02
4	6.180E-01	5.232E-02	3.061E-02
	6.180E-01	5.232E-02	3.061E-02
5	5.354E-01	6.899E-02	3.962E-02
	5.354E-01	6.899E-02	3.962E-02
7	5.212E-01	6.166E-02	3.414E-02
	5.212E-01	6.166E-02	3.414E-02
8	4.934E-01	4.523E-02	2.315E-02
	4.934E-01	4.523E-02	2.315E-02
9	4.878E-01	4.100E-02	2.059E-02
	4.878E-01	4.100E-02	2.059E-02
10	4.841E-01	3.065E-02	1.474E-02
	4.841E-01	3.065E-02	1.474E-02
11	N.A.	8.989E-01	2.086E-02
	N.A.	8.989E-01	2.086E-02
12	N.A.	9.022E-01	2.076E-02
	N.A.	9.022E-01	2.076E-02
13	N.A.	1.483E+00	3.283E-02
	N.A.	1.483E+00	3.283E-02
14	N.A.	1.378E+00	3.264E-02
	N.A.	1.378E+00	3.264E-02
15	5.459E-01	7.379E-02	4.345E-02
	5.459E-01	7.379E-02	4.345E-02

IP7019073

STREAM TRANSPORT PROPERTIES

STRM NO.	SPEC.HT. (BTU/LBM-F)	VISCOSITY (LBM/FT-HR)	THERM COND (BTU/HR-FT-F)
16	N.A.	1.540E+00	3.261E-02
	N.A.	1.540E+00	3.261E-02
17	9.979E-01	1.512E+00	3.650E-01
	9.979E-01	1.512E+00	3.650E-01
18	9.981E-01	1.540E+00	3.642E-01
	9.981E-01	1.540E+00	3.642E-01
19	9.999E-01	9.426E-01	3.828E-01
	9.999E-01	9.426E-01	3.828E-01
20	9.981E-01	1.483E+00	3.656E-01
	9.981E-01	1.483E+00	3.656E-01
21	1.001E+00	9.423E-01	3.823E-01
	1.001E+00	9.423E-01	3.823E-01
22	9.982E-01	1.378E+00	3.685E-01
	9.982E-01	1.378E+00	3.685E-01
23	9.980E-01	1.714E+00	3.601E-01
	9.980E-01	1.714E+00	3.601E-01
24	1.005E+00	7.203E-01	3.907E-01
	1.005E+00	7.203E-01	3.907E-01
25	1.020E+00	5.012E-01	3.961E-01
	1.020E+00	5.012E-01	3.961E-01
26	1.029E+00	4.390E-01	3.954E-01
	1.030E+00	4.386E-01	3.952E-01
27	1.049E+00	3.710E-01	3.907E-01
	1.049E+00	3.710E-01	3.907E-01
28	5.059E-01	5.278E-02	2.800E-02
	5.059E-01	5.278E-02	2.800E-02

IP7019074

STREAM TRANSPORT PROPERTIES

STRM NO.	SPEC.HT. (BTU/LBM-F)	VISCOSITY (LBM/FT-HR)	THERM COND (BTU/HR-FT-F)
30	9.966E-01	1.354E+00	3.701E-01
	9.974E-01	1.347E+00	3.699E-01
31	9.976E-01	1.269E+00	3.721E-01
	9.976E-01	1.269E+00	3.721E-01
32	1.127E+00	2.630E-01	3.655E-01
	1.127E+00	2.630E-01	3.655E-01
33	1.225E+00	2.282E-01	3.387E-01
	1.225E+00	2.282E-01	3.387E-01
34	1.058E+00	3.240E-01	3.894E-01
	1.058E+00	3.240E-01	3.893E-01
35	1.171E+00	2.508E-01	3.541E-01
	1.171E+00	2.508E-01	3.541E-01
36	1.085E+00	3.075E-01	3.797E-01
	1.085E+00	3.075E-01	3.797E-01
37	1.054E+00	3.580E-01	3.894E-01
	1.054E+00	3.580E-01	3.894E-01
38	1.058E+00	3.241E-01	3.894E-01
	1.058E+00	3.240E-01	3.894E-01
39	1.170E+00	2.512E-01	3.544E-01
	1.170E+00	2.512E-01	3.544E-01
40	1.084E+00	3.086E-01	3.800E-01
	1.084E+00	3.086E-01	3.800E-01
41	1.125E+00	2.642E-01	3.662E-01
	1.125E+00	2.642E-01	3.662E-01
42	1.048E+00	3.711E-01	3.911E-01
	1.048E+00	3.711E-01	3.911E-01

IP7019075

STREAM TRANSPORT PROPERTIES

STRM NO.	SPEC.HT. (BTU/LBM-F)	VISCOSITY (LBM/FT-HR)	THERM COND (BTU/HR-FT-F)
43	1.048E+00	3.711E-01	3.911E-01
	1.048E+00	3.711E-01	3.911E-01
44	1.047E+00	3.731E-01	3.913E-01
	1.047E+00	3.731E-01	3.913E-01
45	1.056E+00	3.531E-01	3.886E-01
	1.056E+00	3.531E-01	3.886E-01
46	1.222E+00	2.288E-01	3.393E-01
	1.222E+00	2.288E-01	3.393E-01
47	6.180E-01	5.232E-02	3.061E-02
	6.180E-01	5.232E-02	3.061E-02
48	5.441E-01	5.322E-02	2.930E-02
	5.441E-01	5.322E-02	2.930E-02
49	9.985E-01	1.265E+00	3.718E-01
	9.985E-01	1.265E+00	3.718E-01
50	1.002E+00	8.729E-01	3.848E-01
	1.002E+00	8.729E-01	3.848E-01
51	1.011E+00	6.095E-01	3.939E-01
	1.011E+00	6.095E-01	3.939E-01
52	1.023E+00	4.804E-01	3.958E-01
	1.023E+00	4.804E-01	3.958E-01
54	6.606E-01	7.468E-02	4.908E-02
	6.606E-01	7.468E-02	4.908E-02
55	1.049E+00	3.710E-01	3.907E-01
	1.049E+00	3.710E-01	3.907E-01
56	1.049E+00	3.710E-01	3.907E-01
	1.049E+00	3.710E-01	3.907E-01

IP7019076

STREAM TRANSPORT PROPERTIES

STRM NO.	SPEC.HT. (BTU/LBM-F)	VISCOSITY (LBM/FT-HR)	THERM COND (BTU/HR-FT-F)
57	1.006E+00	7.139E-01	3.905E-01
	1.006E+00	7.139E-01	3.905E-01
58	9.966E-01	1.377E+00	3.694E-01
	9.966E-01	1.377E+00	3.694E-01
59	6.645E-01	7.496E-02	4.947E-02
	6.645E-01	7.496E-02	4.947E-02
60	9.966E-01	1.377E+00	3.694E-01
	9.966E-01	1.377E+00	3.694E-01
61	9.966E-01	1.377E+00	3.694E-01
	9.966E-01	1.377E+00	3.694E-01
62	9.979E-01	1.497E+00	3.654E-01
	9.979E-01	1.497E+00	3.654E-01
63	N.A.	1.324E+00	3.336E-02
	N.A.	1.324E+00	3.336E-02
64	N.A.	1.455E+00	2.339E-02
	N.A.	1.455E+00	2.339E-02
66	6.174E-01	5.237E-02	3.063E-02
	6.174E-01	5.237E-02	3.063E-02
67	5.459E-01	7.378E-02	4.345E-02
	5.459E-01	7.378E-02	4.345E-02
68	5.354E-01	6.898E-02	3.961E-02
	5.354E-01	6.898E-02	3.961E-02
69	N.A.	9.167E-01	3.832E-01
	N.A.	9.167E-01	3.832E-01
70	4.773E-01	2.762E-02	1.293E-02
	4.773E-01	2.762E-02	1.293E-02

IP7019077

STREAM TRANSPORT PROPERTIES

STRM NO.	SPEC.HT. (BTU/LBM-F)	VISCOSITY (LBM/FT-HR)	THERM COND (BTU/HR-FT-F)
71	1.000E+00	9.396E-01	3.828E-01
	1.000E+00	9.396E-01	3.828E-01
72	1.005E+00	7.203E-01	3.907E-01
	1.005E+00	7.203E-01	3.907E-01
73	1.005E+00	7.203E-01	3.907E-01
	1.005E+00	7.203E-01	3.907E-01
74	1.020E+00	5.012E-01	3.961E-01
	1.020E+00	5.012E-01	3.961E-01
75	1.030E+00	4.386E-01	3.952E-01
	1.030E+00	4.386E-01	3.952E-01
76	9.876E-01	1.462E+00	3.721E-01
	9.876E-01	1.462E+00	3.721E-01
77	N.A.	9.132E-01	2.140E-02
	N.A.	9.132E-01	2.140E-02
79	N.A.	9.047E-01	2.100E-02
	N.A.	9.047E-01	2.100E-02
80	N.A.	9.166E-01	2.130E-02
	N.A.	9.253E-01	2.106E-02
81	N.A.	9.081E-01	2.090E-02
	N.A.	9.167E-01	2.066E-02
82	6.606E-01	7.468E-02	4.908E-02
	6.606E-01	7.468E-02	4.908E-02
83	N.A.	7.139E-01	7.084E-02
	N.A.	7.139E-01	7.084E-02
84	N.A.	7.329E-01	6.558E-02
	N.A.	7.329E-01	6.558E-02

IP7019078

STREAM TRANSPORT PROPERTIES

STRM NO.	SPEC.HT. (BTU/LBM-F)	VISCOSITY (LBM/FT-HR)	THERM COND (BTU/HR-FT-F)
85	5.441E-01	5.322E-02	2.930E-02
	5.441E-01	5.322E-02	2.930E-02
86	6.115E-01	5.637E-02	3.322E-02
	6.115E-01	5.637E-02	3.322E-02
87	N.A.	1.455E+00	2.339E-02
	N.A.	1.455E+00	2.339E-02
88	N.A.	1.455E+00	2.339E-02
	N.A.	1.455E+00	2.339E-02
89	N.A.	1.455E+00	2.339E-02
	N.A.	1.455E+00	2.339E-02
90	N.A.	1.455E+00	2.339E-02
	N.A.	1.455E+00	2.339E-02
93	1.171E+00	2.510E-01	3.542E-01
	1.171E+00	2.510E-01	3.542E-01
94	1.108E+00	2.862E-01	3.725E-01
	1.108E+00	2.862E-01	3.725E-01
95	1.070E+00	3.285E-01	3.846E-01
	1.070E+00	3.285E-01	3.846E-01
96	6.180E-01	5.232E-02	3.061E-02
	6.180E-01	5.232E-02	3.061E-02
97	5.059E-01	5.263E-02	2.791E-02
	5.059E-01	5.263E-02	2.791E-02
98	5.059E-01	5.263E-02	2.791E-02
	5.059E-01	5.263E-02	2.791E-02
99	1.049E+00	3.710E-01	3.907E-01
	1.049E+00	3.710E-01	3.907E-01

IP7019079

STREAM TRANSPORT PROPERTIES

STRM NO.	SPEC.HT. (BTU/LBM-F)	VISCOSITY (LBM/FT-HR)	THERM COND (BTU/HR-FT-F)
100	1.055E+00	3.555E-01	3.890E-01
	1.055E+00	3.555E-01	3.890E-01
101	1.048E+00	3.711E-01	3.911E-01
	1.048E+00	3.711E-01	3.911E-01
102	6.125E-01	5.525E-02	3.249E-02
	6.125E-01	5.525E-02	3.249E-02
104	9.966E-01	1.377E+00	3.694E-01
	9.966E-01	1.377E+00	3.694E-01
105	9.979E-01	1.502E+00	3.653E-01
	9.979E-01	1.502E+00	3.653E-01
106	1.034E+00	3.757E-01	3.980E-01
	1.034E+00	3.757E-01	3.980E-01
107	9.990E-01	2.286E+00	3.487E-01
	9.990E-01	2.286E+00	3.487E-01
108	9.990E-01	2.286E+00	3.487E-01
	9.990E-01	2.286E+00	3.487E-01
109	1.055E+00	3.555E-01	3.890E-01
	1.055E+00	3.555E-01	3.890E-01
110	1.055E+00	3.555E-01	3.890E-01
	1.055E+00	3.555E-01	3.890E-01
111	1.055E+00	3.555E-01	3.890E-01
	1.055E+00	3.555E-01	3.890E-01
114	1.223E+00	2.285E-01	3.390E-01
	1.224E+00	2.284E-01	3.389E-01
115	1.222E+00	2.288E-01	3.393E-01
	1.222E+00	2.288E-01	3.393E-01

IP7019080

STREAM TRANSPORT PROPERTIES

STRM NO.	SPEC.HT. (BTU/LBM-F)	VISCOSITY (LBM/FT-HR)	THERM COND (BTU/HR-FT-F)
116	6.645E-01	7.496E-02	4.947E-02
	6.645E-01	7.496E-02	4.947E-02
117	6.645E-01	7.496E-02	4.947E-02
	6.645E-01	7.496E-02	4.947E-02
118	6.606E-01	7.468E-02	4.908E-02
	6.606E-01	7.468E-02	4.908E-02
119	6.645E-01	7.496E-02	4.947E-02
	6.645E-01	7.496E-02	4.947E-02
120	6.441E-01	6.859E-02	4.346E-02
	6.441E-01	6.859E-02	4.346E-02
121	6.180E-01	5.232E-02	3.061E-02
	6.180E-01	5.232E-02	3.061E-02
122	6.606E-01	7.468E-02	4.908E-02
	6.606E-01	7.468E-02	4.908E-02
123	6.180E-01	5.232E-02	3.061E-02
	6.180E-01	5.232E-02	3.061E-02
124	6.180E-01	5.232E-02	3.061E-02
	6.180E-01	5.232E-02	3.061E-02
125	6.606E-01	7.468E-02	4.908E-02
	6.606E-01	7.468E-02	4.908E-02
126	6.174E-01	5.237E-02	3.063E-02
	6.174E-01	5.237E-02	3.063E-02
127	5.059E-01	5.278E-02	2.800E-02
	5.056E-01	5.277E-02	2.799E-02
128	5.059E-01	5.278E-02	2.800E-02
	5.059E-01	5.278E-02	2.800E-02

IP7019081

STREAM TRANSPORT PROPERTIES

STRM NO.	SPEC.HT. (BTU/LBM-F)	VISCOSITY (LBM/FT-HR)	THERM COND (BTU/HR-FT-F)
129	9.990E-01	2.286E+00	3.487E-01
	9.990E-01	2.286E+00	3.487E-01
130	6.180E-01	5.232E-02	3.061E-02
	6.180E-01	5.232E-02	3.061E-02
131	6.606E-01	7.468E-02	4.908E-02
	6.606E-01	7.468E-02	4.908E-02
132	9.991E-01	1.124E+00	3.762E-01
	9.991E-01	1.124E+00	3.762E-01
133	9.974E-01	1.347E+00	3.699E-01
	9.974E-01	1.347E+00	3.699E-01
134	9.974E-01	1.347E+00	3.699E-01
	9.974E-01	1.347E+00	3.699E-01
135	9.982E-01	1.378E+00	3.685E-01
	9.982E-01	1.378E+00	3.685E-01
136	6.180E-01	5.232E-02	3.061E-02
	6.180E-01	5.232E-02	3.061E-02
137	6.180E-01	5.232E-02	3.061E-02
	6.180E-01	5.232E-02	3.061E-02
138	1.000E+00	9.396E-01	3.828E-01
	1.000E+00	9.396E-01	3.828E-01
139	1.005E+00	7.203E-01	3.907E-01
	1.005E+00	7.203E-01	3.907E-01
140	1.020E+00	5.012E-01	3.961E-01
	1.020E+00	5.012E-01	3.961E-01
141	4.815E-01	5.120E-02	2.640E-02
	4.815E-01	5.120E-02	2.640E-02

IP7019082

STREAM TRANSPORT PROPERTIES

STRM NO.	SPEC.HT. (BTU/LBM-F)	VISCOSITY (LBM/FT-HR)	THERM COND (BTU/HR-FT-F)
142	5.059E-01	5.263E-02	2.791E-02
	5.053E-01	5.261E-02	2.787E-02
143	5.059E-01	5.263E-02	2.791E-02
	5.059E-01	5.263E-02	2.791E-02
144	1.000E+00	9.396E-01	3.828E-01
	1.000E+00	9.396E-01	3.828E-01
145	1.002E+00	8.729E-01	3.848E-01
	1.002E+00	8.729E-01	3.848E-01
146	1.002E+00	8.729E-01	3.848E-01
	N.A.	9.167E-01	3.807E-01
147	1.005E+00	7.203E-01	3.907E-01
	1.005E+00	7.203E-01	3.907E-01
148	5.059E-01	5.278E-02	2.800E-02
	5.059E-01	5.278E-02	2.800E-02
149	1.011E+00	6.095E-01	3.939E-01
	1.011E+00	6.095E-01	3.939E-01
150	1.020E+00	5.012E-01	3.961E-01
	1.020E+00	5.012E-01	3.961E-01
151	5.059E-01	5.263E-02	2.791E-02
	5.057E-01	5.262E-02	2.789E-02
152	5.059E-01	5.263E-02	2.791E-02
	5.057E-01	5.262E-02	2.789E-02
153	9.976E-01	1.269E+00	3.721E-01
	9.976E-01	1.269E+00	3.721E-01
154	9.976E-01	1.269E+00	3.721E-01
	9.976E-01	1.269E+00	3.721E-01

IP7019083

STREAM TRANSPORT PROPERTIES

STRM NO.	SPEC.HT. (BTU/LBM-F)	VISCOSITY (LBM/FT-HR)	THERM COND (BTU/HR-FT-F)
155	9.976E-01	1.269E+00	3.721E-01
	9.976E-01	1.269E+00	3.721E-01
156	6.606E-01	7.468E-02	4.908E-02
	6.606E-01	7.468E-02	4.908E-02
157	6.606E-01	7.468E-02	4.908E-02
	6.606E-01	7.468E-02	4.908E-02
158	1.034E+00	3.755E-01	3.978E-01
	1.034E+00	3.755E-01	3.978E-01
159	1.034E+00	3.755E-01	3.979E-01
	1.034E+00	3.755E-01	3.978E-01
160	1.054E+00	3.580E-01	3.894E-01
	1.054E+00	3.580E-01	3.894E-01
161	1.085E+00	3.075E-01	3.797E-01
	1.085E+00	3.075E-01	3.797E-01
162	1.171E+00	2.508E-01	3.541E-01
	1.171E+00	2.508E-01	3.541E-01
163	1.171E+00	2.508E-01	3.541E-01
	1.171E+00	2.508E-01	3.541E-01
164	1.085E+00	3.075E-01	3.797E-01
	1.085E+00	3.075E-01	3.797E-01
165	1.054E+00	3.580E-01	3.894E-01
	1.054E+00	3.580E-01	3.894E-01
166	5.211E-01	6.250E-02	3.468E-02
	5.209E-01	6.250E-02	3.467E-02
167	6.174E-01	5.237E-02	3.063E-02
	6.145E-01	5.228E-02	3.050E-02

IP7019084

STREAM TRANSPORT PROPERTIES

STRM NO.	SPEC.HT. (BTU/LBM-F)	VISCOSITY (LBM/FT-HR)	THERM COND (BTU/HR-FT-F)
168	6.267E-01	6.103E-02	3.707E-02
	6.254E-01	6.097E-02	3.699E-02
169	6.267E-01	6.103E-02	3.707E-02
	6.254E-01	6.097E-02	3.699E-02
170	6.174E-01	5.237E-02	3.063E-02
	6.145E-01	5.228E-02	3.050E-02
171	6.174E-01	5.237E-02	3.063E-02
	6.174E-01	5.237E-02	3.063E-02
172	1.034E+00	3.755E-01	3.978E-01
	1.034E+00	3.755E-01	3.978E-01
173	1.056E+00	3.531E-01	3.886E-01
	1.056E+00	3.531E-01	3.886E-01
174	1.056E+00	3.531E-01	3.886E-01
	1.056E+00	3.531E-01	3.886E-01
175	1.084E+00	3.086E-01	3.800E-01
	1.084E+00	3.086E-01	3.800E-01
176	1.170E+00	2.512E-01	3.544E-01
	1.170E+00	2.512E-01	3.544E-01
177	1.034E+00	3.755E-01	3.979E-01
	1.034E+00	3.755E-01	3.979E-01
178	1.170E+00	2.512E-01	3.544E-01
	1.170E+00	2.512E-01	3.544E-01
179	1.084E+00	3.086E-01	3.800E-01
	1.084E+00	3.086E-01	3.800E-01
180	6.441E-01	6.859E-02	4.346E-02
	6.441E-01	6.859E-02	4.346E-02

IP7019085

STREAM TRANSPORT PROPERTIES

STRM NO.	SPEC.HT. (BTU/LBM-F)	VISCOSITY (LBM/FT-HR)	THERM COND (BTU/HR-FT-F)
181	5.059E-01	5.278E-02	2.800E-02
	5.059E-01	5.278E-02	2.800E-02
182	5.441E-01	5.322E-02	2.930E-02
	5.441E-01	5.322E-02	2.930E-02
183	6.180E-01	5.232E-02	3.061E-02
	6.180E-01	5.232E-02	3.061E-02
184	6.180E-01	5.232E-02	3.061E-02
	6.180E-01	5.232E-02	3.061E-02
186	6.180E-01	5.232E-02	3.061E-02
	6.180E-01	5.232E-02	3.061E-02
187	1.049E+00	3.710E-01	3.907E-01
	1.049E+00	3.710E-01	3.907E-01
191	1.049E+00	3.710E-01	3.907E-01
	1.049E+00	3.710E-01	3.907E-01
192	1.049E+00	3.710E-01	3.907E-01
	1.049E+00	3.710E-01	3.907E-01
193	1.049E+00	3.710E-01	3.907E-01
	1.049E+00	3.710E-01	3.907E-01
194	1.049E+00	3.710E-01	3.907E-01
	1.049E+00	3.710E-01	3.907E-01
196	1.049E+00	3.710E-01	3.907E-01
	1.049E+00	3.710E-01	3.907E-01
197	1.049E+00	3.710E-01	3.907E-01
	1.049E+00	3.710E-01	3.907E-01
199	1.047E+00	3.731E-01	3.913E-01
	1.047E+00	3.731E-01	3.913E-01

IP7019086

STREAM TRANSPORT PROPERTIES

STRM NO.	SPEC.HT. (BTU/LBM-F)	VISCOSITY (LBM/FT-HR)	THERM COND (BTU/HR-FT-F)
200	1.049E+00	3.710E-01	3.907E-01
	1.049E+00	3.710E-01	3.907E-01
201	1.047E+00	3.731E-01	3.913E-01
	1.047E+00	3.731E-01	3.913E-01
202	1.047E+00	3.731E-01	3.913E-01
	1.047E+00	3.731E-01	3.913E-01
203	1.047E+00	3.731E-01	3.913E-01
	1.047E+00	3.731E-01	3.913E-01
204	1.048E+00	3.711E-01	3.911E-01
	1.048E+00	3.711E-01	3.911E-01
205	1.034E+00	3.757E-01	3.980E-01
	1.034E+00	3.757E-01	3.980E-01
207	1.049E+00	3.710E-01	3.907E-01
	1.049E+00	3.710E-01	3.907E-01
208	N.A.	7.329E-01	6.558E-02
	N.A.	7.329E-01	6.558E-02
210	5.353E-01	5.258E-02	2.866E-02
	5.353E-01	5.258E-02	2.866E-02
211	4.815E-01	5.120E-02	2.640E-02
	4.815E-01	5.120E-02	2.640E-02
212	9.982E-01	1.378E+00	3.685E-01
	9.982E-01	1.378E+00	3.685E-01
213	9.966E-01	1.377E+00	3.694E-01
	9.966E-01	1.377E+00	3.694E-01
214	1.000E+00	2.710E+00	3.421E-01
	1.000E+00	2.710E+00	3.421E-01

IP7019087

STREAM TRANSPORT PROPERTIES

STRM NO.	SPEC.HT. (BTU/LBM-F)	VISCOSITY (LBM/FT-HR)	THERM COND (BTU/HR-FT-F)
215	9.981E-01	1.519E+00	3.647E-01
	9.981E-01	1.519E+00	3.647E-01
218	1.011E+00	6.095E-01	3.939E-01
	1.011E+00	6.095E-01	3.939E-01
219	1.023E+00	4.804E-01	3.958E-01
	1.023E+00	4.804E-01	3.958E-01
220	1.023E+00	4.804E-01	3.958E-01
	1.023E+00	4.804E-01	3.958E-01
222	6.645E-01	7.496E-02	4.947E-02
	6.645E-01	7.496E-02	4.947E-02
223	1.049E+00	3.710E-01	3.907E-01
	1.049E+00	3.710E-01	3.907E-01
224	5.211E-01	6.250E-02	3.468E-02
	5.209E-01	6.250E-02	3.467E-02
225	1.000E+00	9.349E-01	3.831E-01
	1.000E+00	9.349E-01	3.831E-01
226	1.001E+00	9.289E-01	3.828E-01
	1.001E+00	9.289E-01	3.828E-01
227	N.A.	7.329E-01	1.084E-01
	N.A.	7.329E-01	1.084E-01
301	1.001E+00	9.177E-01	3.832E-01
	1.001E+00	9.177E-01	3.832E-01
302	1.001E+00	9.197E-01	3.831E-01
	1.001E+00	9.197E-01	3.831E-01
303	1.001E+00	9.208E-01	3.831E-01
	1.001E+00	9.208E-01	3.831E-01

IP70190088

STREAM TRANSPORT PROPERTIES

STRM NO.	SPEC.HT. (BTU/LBM-F)	VISCOSITY (LBM/FT-HR)	THERM COND (BTU/HR-FT-F)
305	4.841E-01	3.065E-02	1.474E-02
	4.841E-01	3.065E-02	1.474E-02
306	4.841E-01	3.065E-02	1.474E-02
	4.841E-01	3.065E-02	1.474E-02
307	4.841E-01	3.065E-02	1.474E-02
	4.841E-01	3.065E-02	1.474E-02
319	9.999E-01	9.445E-01	3.828E-01
	9.999E-01	9.445E-01	3.828E-01
321	1.001E+00	9.348E-01	3.826E-01
	1.001E+00	9.348E-01	3.826E-01
334	1.000E+00	9.406E-01	3.829E-01
	1.000E+00	9.396E-01	3.828E-01
401	6.267E-01	6.103E-02	3.707E-02
	6.267E-01	6.103E-02	3.707E-02
402	6.174E-01	5.237E-02	3.063E-02
	6.174E-01	5.237E-02	3.063E-02
403	5.211E-01	6.250E-02	3.468E-02
	5.211E-01	6.250E-02	3.468E-02
404	4.923E-01	4.665E-02	2.396E-02
	4.920E-01	4.664E-02	2.395E-02
405	4.868E-01	4.157E-02	2.090E-02
	4.861E-01	4.155E-02	2.088E-02
406	4.784E-01	3.182E-02	1.532E-02
	4.773E-01	3.181E-02	1.530E-02
407	6.267E-01	6.103E-02	3.707E-02
	6.267E-01	6.103E-02	3.707E-02

IP70190089

STREAM TRANSPORT PROPERTIES

STRM NO.	SPEC.HT. (BTU/LBM-F)	VISCOSITY (LBM/FT-HR)	THERM COND (BTU/HR-FT-F)
408	6.174E-01	5.237E-02	3.063E-02
	6.174E-01	5.237E-02	3.063E-02
409	5.211E-01	6.250E-02	3.468E-02
	5.211E-01	6.250E-02	3.468E-02
411	5.211E-01	6.250E-02	3.468E-02
	5.211E-01	6.250E-02	3.468E-02
413	1.049E+00	3.710E-01	3.907E-01
	1.049E+00	3.710E-01	3.907E-01
414	N.A.	7.329E-01	6.558E-02
	N.A.	7.329E-01	6.558E-02
416	1.049E+00	3.710E-01	3.907E-01
	1.049E+00	3.710E-01	3.907E-01
417	N.A.	7.329E-01	6.558E-02
	N.A.	7.329E-01	6.558E-02
418	1.049E+00	3.710E-01	3.907E-01
	1.049E+00	3.710E-01	3.907E-01
419	N.A.	7.329E-01	6.558E-02
	N.A.	7.329E-01	6.558E-02
420	9.881E-01	1.333E+00	3.757E-01
	9.881E-01	1.333E+00	3.757E-01
421	1.049E+00	3.710E-01	3.907E-01
	1.049E+00	3.710E-01	3.907E-01
450	4.694E-01	2.904E-02	1.368E-02
	4.688E-01	2.904E-02	1.367E-02
600	1.048E+00	3.711E-01	3.911E-01
	1.048E+00	3.711E-01	3.911E-01

IP7019090

STREAM TRANSPORT PROPERTIES

STRM NO.	SPEC.HT. (BTU/LBM-F)	VISCOSITY (LBM/FT-HR)	THERM COND (BTU/HR-FT-F)
608	1.034E+00	3.757E-01	3.980E-01
	1.034E+00	3.757E-01	3.980E-01
609	1.034E+00	3.757E-01	3.980E-01
	1.034E+00	3.757E-01	3.980E-01
610	1.034E+00	3.757E-01	3.980E-01
	1.034E+00	3.757E-01	3.980E-01
611	1.034E+00	3.757E-01	3.980E-01
	1.034E+00	3.757E-01	3.980E-01
612	1.034E+00	3.757E-01	3.980E-01
	1.034E+00	3.755E-01	3.979E-01
613	6.174E-01	5.237E-02	3.063E-02
	6.174E-01	5.237E-02	3.063E-02
684	6.267E-01	6.103E-02	3.707E-02
	6.267E-01	6.103E-02	3.707E-02
777	5.059E-01	5.278E-02	2.800E-02
	5.059E-01	5.278E-02	2.800E-02
781	N.A.	1.455E+00	3.154E-01
	N.A.	1.455E+00	3.154E-01
999	N.A.	9.167E-01	2.010E-02
	N.A.	9.167E-01	2.010E-02

IP7019091

PROPERTIES FOR ACTIVE STREAMS

STRM	STRM TYPE	FROM /TO	FLU ID	MASS FLOW (LBM/HR)	TEMP (F)	PRESS (PSIA)	QUALITY (R HUM) (-)	ENTHALPY (B/LB)	PDRP/P (-)
23	2	16-T	0	95771455.	96.4	50.0	-0.2010	64.5	0.000
		18-T			94.6	50.0	-0.2028	62.8	
26	2	22-T	0	5145855.	303.6	185.5	-0.0885	273.7	0.269
		75-IA			303.8	135.6	-0.0559	273.7	
30	2	30-T	0	5145855.	119.6	434.9	-0.4467	88.7	0.457
		133-I			120.1	236.2	-0.3398	88.7	
32	1	26-T	0	3185399.	487.5	2741.7	-0.9627	473.2	0.002
		28-T			487.4	2735.9	-0.9550	473.2	
34	1	24-T	0	3185399.	404.2	2767.8	-1.3092	382.6	0.004
		26-T			404.2	2757.3	-1.2911	382.5	
38	1	25-T	0	3185399.	404.1	2767.8	-1.3095	382.5	0.004
		27-T			404.1	2757.3	-1.2914	382.5	
41	1	27-T	0	3185399.	485.6	2741.7	-0.9698	471.1	0.002
		29-T			485.5	2735.9	-0.9621	471.1	
50	5	20-D	0	662864.	173.4	12.7	-0.0323	141.4	0.215
		139-I			173.4	10.0	-0.0201	141.4	
67	2	67-U	0	5594454.	1012.2	570.8	1.4348	1525.5	0.000
		5-I			1012.2	570.8	1.4348	1525.5	
80	2	46-E	0	63659.	166.6	5.5	0.9774	1110.0	0.036
		19-S			165.0	5.3	0.9780	1110.0	
81	2	47-E	0	58468.	167.9	5.7	0.9785	1111.7	0.030
		999-IA			166.6	5.5	0.9791	1111.7	
108	2	61-U	0	95771455.	72.3	50.0	-0.2269	40.5	0.000
		16-T			81.0	50.0	-0.2175	49.2	
114	1	114-U	0	6370798.	549.3	2720.2	-0.6978	545.6	0.008
		64-I			549.3	2699.6	-0.6765	545.6	

IP7019092

PROPERTIES FOR ACTIVE STREAMS

STRM	STRM TYPE	FROM /TO	FLU ID	MASS FLOW (LBM/HR)	TEMP (F)	PRESS (PSIA)	QUALITY (R HUM) (-)	ENTHALPY (B/LB)	PDRP/P (-)
129	2	61-B	0	47878545.	72.3	50.0	-0.2269	40.5	0.000
		17-T			80.9	50.0	-0.2176	49.1	
142	2	142-U	0	220577.	638.2	136.6	1.1761	1346.2	0.020
		23-S			637.9	133.8	1.1763	1346.2	
146	5	139-U	0	662864.	173.4	10.0	-0.0201	141.4	0.446
		65-I			166.6	5.5	0.0068	141.4	
151	2	142-B	0	133170.	638.2	136.6	1.1761	1346.2	0.010
		38-IT			638.0	135.2	1.1762	1346.2	
152	2	143-B	0	122603.	638.2	136.6	1.1761	1346.2	0.010
		37-IT			638.0	135.2	1.1762	1346.2	
159	1	159-U	0	6370798.	354.7	2794.7	-1.5402	330.8	0.004
		158-I			354.7	2783.5	-1.5171	330.8	
166	2	166-U	0	122411.	813.0	255.6	1.2769	1429.9	0.008
		24-S			812.8	253.6	1.2768	1429.9	
167	2	167-U	0	286051.	642.0	612.3	1.1532	1315.4	0.011
		26-S			641.2	605.5	1.1527	1315.4	
168	2	168-U	0	260323.	785.6	1053.1	1.2919	1377.3	0.010
		28-S			784.7	1042.9	1.2904	1377.3	
169	2	168-B	0	262197.	785.6	1053.1	1.2919	1377.3	0.009
		29-S			784.8	1043.5	1.2905	1377.3	
170	2	167-B	0	278209.	642.0	612.3	1.1532	1315.4	0.009
		27-S			641.3	606.5	1.1528	1315.4	
224	2	166-B	0	125853.	813.0	255.6	1.2769	1429.9	0.009
		25-S			812.8	253.3	1.2768	1429.9	
334	2	334-U	0	5145855.	163.2	236.2	-0.2879	131.7	0.215
		71-IA			163.3	185.5	-0.2557	131.7	

IP7019093

PROPERTIES FOR ACTIVE STREAMS

STRM	STRM TYPE	FROM /TO	FLU ID	MASS FLOW (LBM/HR)	TEMP (F)	PRESS (PSIA)	QUALITY (R HUM) (-)	ENTHALPY (B/LB)	PDRP/P (-)
405	2	9-E	0	334609.	438.7	43.9	1.0895	1254.9	0.027
		21-S			438.4	42.7	1.0899	1254.9	
406	2	10-E	0	170143.	253.9	13.2	1.0234	1171.1	0.039
		20-S			253.6	12.7	1.0241	1171.1	
450	2	450-U	0	63332.	196.4	5.8	1.0131	1146.5	0.040
		219-S			196.2	5.6	1.0138	1146.5	
612	2	609-U	0	6370798.	354.6	2828.8	-1.6158	330.8	0.012
		159-I			354.7	2794.7	-1.5402	330.8	
999	2	999-U	0	63026.	166.6	5.5	0.9806	1113.2	0.008
		319-S			166.2	5.5	0.9807	1113.2	

(+) INDICATES STREAM START CONNECTION, (-) INDICATES STREAM END CONNECTION.

* INDICATES STREAM AFFECTED BY ENTRY OF TEST DATA.

IP7019094

COMPARISON OF COMPONENT PORT TEST DATA WITH PEPSE EMPLOYED STREAM PROPERTIES

STREAM NUMBER	STRM TYPE	PEPSE/ TEST	STREAM START/ END	TEMPERATURE (F)	THERMO PRESSURE (PSIA)	QUALITY (-)
15	0	PEPSE	START	1012.3	570.85	
		TEST	START	1012.3	570.85	
19	0	PEPSE	START	162.9		
		TEST	START	162.9		
21	0	PEPSE	START	162.8		
		TEST	START	162.8		
23	2	PEPSE	END	94.6		
		TEST	END	94.6		
24	0	PEPSE	START	202.9		
		TEST	START	202.9		
25	0	PEPSE	START	272.2		
		TEST	START	272.2		
26	2	PEPSE	START	303.6		
		TEST	START	303.6		
32	1	PEPSE	START	487.5		
		TEST	START	487.5		
33	0	PEPSE	START	550.0		
		TEST	START	550.0		
34	1	PEPSE	START	404.2		
		TEST	START	404.2		
35	0	PEPSE	START	494.9		
		TEST	START	494.9		
36	0	PEPSE	START	413.0		
		TEST	START	413.0		
37	0	PEPSE	START	360.8		
		TEST	START	360.8		

IP7019095

COMPARISON OF COMPONENT PORT TEST DATA WITH PEPSE EMPLOYED STREAM PROPERTIES

STREAM NUMBER	STRM TYPE	PEPSE/ TEST	STREAM START/ END	TEMPERATURE (F)	THERMO PRESSURE (PSIA)	QUALITY (-)
39	0	PEPSE	START	494.4		
		TEST	START	494.4		
40	0	PEPSE	START	411.7		
		TEST	START	411.7		
41	1	PEPSE	START	485.6		
		TEST	START	485.6		
42	0	PEPSE	START		296.14	
		TEST	START		296.14	
43	0	PEPSE	START		296.14	
		TEST	START		296.14	
45	0	PEPSE	START	365.0		
		TEST	START	365.0		
46	0	PEPSE	START	548.7		
		TEST	START	548.7		
50	5	PEPSE	START	173.4		
		TEST	START	173.4		
		PEPS	END		10.00	
		TEST	END		10.00	
51	0	PEPSE	START	232.0		
		TEST	START	232.0		
52	0	PEPSE	START	281.6		
		TEST	START	281.6		
57	0	PEPSE	START			0.000
		TEST	START			0.000
58	0	PEPSE	START		434.94	
		TEST	START		434.94	

IP7019096

COMPARISON OF COMPONENT PORT TEST DATA WITH PEPSE EMPLOYED STREAM PROPERTIES

STREAM NUMBER	STRM TYPE	PEPSE/ TEST	STREAM START/ END	TEMPERATURE (F)	THERMO PRESSURE (PSIA)	QUALITY (-)
76	0	PEPSE	START		2829.85	
		TEST	START		2829.85	
80	2	PEPSE	END		5.34	
		TEST	END		5.34	
108	2	PEPSE	END	81.0		
		TEST	END	81.0		
129	2	PEPSE	END	80.9		
		TEST	END	80.9		
142	2	PEPSE	END		133.84	
		TEST	END		133.84	
146	5	PEPSE	END		5.54	
		TEST	END		10.00	
166	2	PEPSE	END		253.56	
		TEST	END		253.56	
167	2	PEPSE	END		605.47	
		TEST	END		605.47	
168	2	PEPSE	END		1042.87	
		TEST	END		1042.87	
169	2	PEPSE	END		1043.48	
		TEST	END		1043.48	
170	2	PEPSE	END		606.54	
		TEST	END		606.54	
224	2	PEPSE	END		253.29	
		TEST	END		253.29	
225	0	PEPSE	START	164.0		
		TEST	START	164.0		

IP7019097

COMPARISON OF COMPONENT PORT TEST DATA WITH PEPSE EMPLOYED STREAM PROPERTIES

STREAM NUMBER	STRM TYPE	PEPSE/ TEST	STREAM START/ END	TEMPERATURE (F)	THERMO PRESSURE (PSIA)	QUALITY (-)
319	0	PEPSE	START	162.6		
		TEST	START	162.6		
321	0	PEPSE	START	163.9		
		TEST	START	163.9		
404	2	PEPSE	END		67.00	
		TEST	END		67.00	
405	2	PEPSE	END		42.72	
		TEST	END		42.72	
406	2	PEPSE	END		12.73	
		TEST	END		12.73	
420	0	PEPSE	START		2827.74	
		TEST	START		2827.74	
450	2	PEPSE	END		5.60	
		TEST	END		5.60	
999	2	PEPSE	END		5.50	
		TEST	END		5.50	

IP7019098

DETAILED TURBINE PERFORMANCE TABLE A

COMPONENT	NUM FLOW ENDS	STAGE GRP EFFCY (-)	MECH POWER (MW)	BOWL FLOW COEFF (*)	SHELL FLOW COEFF (*)	EXTRACT STEAM EXTRACTION (L B M / H R)	FLOW LIQUID REMOVED
1/GENL	1	0.87440	7.54548E+01	84147.	111688.	0.	0.
3/	1	0.91408	9.89930E+01	111688.	151189.	522520.	0.
4/	1	0.97302	1.12912E+02	151189.	N.A.	0.	0.
	SECTION POWER 2.87360E+02						
	SECTION EFFICIENCY AT LOAD = 0.93609 (RE THROTTLE INLET = 0.91919)						
5/	2	0.84444	6.71543E+01	286655.	381433.	0.	0.
6/	2	0.92394	1.01940E+02	381387.	562022.	216989.	0.
					+ TIP LKG	31275.	
7/	2	0.92199	1.17043E+02	562022.	N.A.	456583.	0.
	SECTION POWER 2.86137E+02						
	SECTION EFFICIENCY AT LOAD = 0.91522						
8/	6	0.83052	8.90688E+01	915051.	1636033.	126577.	0.
					+ TIP LKG	31535.	
9/	6	0.82727	4.85282E+01	1636033.	2249965.	287057.	0.
					+ TIP LKG	47551.	
10/	6	0.89214	1.15506E+02	2249965.	2118573.	149104.	0.
					+ TIP LKG	21039.	
46/	2	0.81987	2.07304E+01	2118573.	4574690.	63659.	0.
13/	2	0.69310	2.49916E+01	4574690.	N.A.	0.	0.
	SECTION POWER 2.98825E+02						
	SECTION EFFICIENCY AT LOAD = 0.83490						
47/	2	0.81824	2.00109E+01	2117937.	4462408.	58468.	0.
12/	2	0.66967	2.64022E+01	4462408.	N.A.	0.	0.
	SECTION POWER 4.64131E+01						
	SECTION EFFICIENCY AT LOAD = 0.82566						
11/	2	0.82341	1.96675E+01	2117937.	4389503.	53899.	0.
14/	2	0.73900	2.41970E+01	4389503.	N.A.	0.	0.
	SECTION POWER 4.38646E+01						
	SECTION EFFICIENCY AT LOAD = 0.84905						
37/STPM	1	0.86181	1.05674E+01	4389503.	N.A.	N.A.	N.A.
38/	1	0.75951	1.05762E+01	4389503.	N.A.	N.A.	N.A.

IP7019099

DETAILED TURBINE PERFORMANCE TABLE B

COMPONENT	STG GROUP BOWL FLOW (LBM/HR)	PRESSURE BOWL (PSIA)	PRESSURE SHELL (PSIA)	ENTHALPY BOWL (BTU/LBM)	ENTHALPY SHELL (BTU/LBM)	ENTROPY BOWL (BTU/LB-F)	ENTROPY SHELL (BTU/LB-F)	PRESS RATIO (-)	EXTR PRESS DROP (-)	MOIST REMOV EFFCT (-)
1/GENL	6704335.	2223.08	1621.48	1466.2	1427.8	1.544	1.548	1.37	.00	N.A.
3/	6688142.	1621.48	1058.34	1427.8	1377.3	1.548	1.552	1.53	.00	N.A.
4/	6165622.	1058.34	612.34	1377.3	1314.8	1.552	1.554	1.73	.00	N.A.
5/	5594454.	570.85	415.78	1525.5	1484.6	1.726	1.732	1.37	.00	N.A.
6/	5610646.	415.78	258.50	1484.4	1422.1	1.732	1.736	1.61	.01	N.A.
7/	5362382.	258.50	136.56	1422.1	1347.6	1.736	1.742	1.89	.00	N.A.
8/	4899678.	134.99	68.29	1347.6	1285.2	1.743	1.756	1.98	.01	N.A.
9/	4741566.	68.29	44.54	1285.2	1249.9	1.756	1.765	1.53	.01	N.A.
10/	4406957.	44.54	13.44	1249.9	1160.0	1.765	1.781	3.31	.01	N.A.
46/	1412554.	13.44	5.61	1160.0	1110.0	1.781	1.798	2.40	.01	N.A.
13/	1348895.	5.61	1.28	1110.0	1046.7	1.798	1.847	4.37	.00	N.A.
47/	1412130.	13.44	5.78	1160.0	1111.7	1.781	1.798	2.33	.01	N.A.
12/	1353662.	5.78	1.15	1111.7	1045.1	1.798	1.856	5.02	.00	N.A.
11/	1412130.	13.44	5.90	1160.0	1112.5	1.781	1.797	2.28	.01	N.A.
14/	1358232.	5.90	1.59	1112.5	1051.7	1.797	1.834	3.72	.00	N.A.
37/STPM	122603.	135.18	1.78	1346.2	1052.1	1.741	1.823	76.	N.A.	N.A.
38/	133170.	135.18	1.35	1346.2	1075.2	1.741	1.892	100.	N.A.	N.A.

DETAILED TURBINE PERFORMANCE TABLE C

BASE END POINT PRESSURE IS 1.500 IN.HG

COMP NUMB	ANNULUS VELOCITY ACTUAL (FT/SEC)	ANNULUS VELOCITY SONIC (FT/SEC)	EFFICIENCY AT BASE END PRESSURE (-)	EXHAUST LOSS DRY (BTU/LBM)	EXHAUST LOSS MOIST CORR'D (BTU/LBM)	ENERGY END POINTS ELEP BASE P (B T U / L B M)	ENERGY END POINTS ELEP COND P (B T U / L B M)	ENERGY END POINTS ELEP CHOK P (B T U / L B M)	CHOKE PRESS (PSIA)

IP7019100

DETAILED TURBINE PERFORMANCE TABLE E
LEAKAGES OF INLET FLOWS

COMPONENT	LEAKAGE TO EXTRACTION (LBM/HR)
6/GENL	3.12752E+04
8/GENL	3.15354E+04
9/GENL	4.75513E+04
10/GENL	2.10388E+04

IP7019101

DETAILED FEEDWATER HEATER PERFORMANCE OUTPUT - TABLE A
(EXTRACTION FLOW UPDATING BEGINS AT ITERATION 3)

HTR NO.	COMP NO.	COMPONENT DESCRIPTION	HEAT TRANSFER/DEG* CONDENSING SECTION (B T U / H R - F)	HEAT TRANSFER/DEG* SUBCOOL/MX SECTION (B T U / H R - F)	HEAT# EX PERF INDEX (-)	TERM TEMP DIFF (TTD) (F)	DRAIN COOL DIFF (DCA) (F)	FW OR TUBE PRESS DROP (PSIA)	UPD INT/ (RELAXN) DEMAND REFERENCE (-)
1	19	STD. FW. HEATER	4.92E+06	0.00E+00	0.96	2.09	N.A.	0.0	1(0.75) 46
2	20	FWHT. BACK-DRAIN	4.02E+06	1.73E+06	0.97	1.89	10.1	0.0	1(0.75) 10
3	21	FWHT. BACK-DRAIN	3.17E+06	4.80E+05	0.96	-1.01	29.1	0.0	1(0.75) 9
4	22	FWHT. BACK-DRAIN	1.71E+06	0.00E+00	0.99	-3.65	9.4	0.0	1(0.75) 8
5	23	CONTACT HEATER	N.A.	N.A.	0.77	0.00	N.A.	1.8	1(0.75) 7
6	24	FW. W/DESUP+COOL	8.35E+05	2.12E+06	0.97	-1.95	6.1	15.6	1(0.75) 6
7	25	FW. W/DESUP+COOL	8.51E+05	1.52E+06	0.96	-1.96	10.4	15.6	1(0.75)166
8	26	FW. W/DESUP+COOL	2.28E+06	1.64E+06	0.98	-0.23	8.8	15.7	1(0.75)126
9	27	FW. W/DESUP+COOL	2.20E+06	1.72E+06	0.98	1.86	7.6	15.7	1(0.75)167
10	28	FW. W/DESUP+COOL	1.64E+06	0.00E+00	0.99	-0.18	7.5	15.7	1(0.75) 3
11	29	FW. W/DESUP+COOL	1.62E+06	0.00E+00	0.99	1.16	8.8	15.7	1(0.75)168
12	219	STD. FW. HEATER	1.77E+06	0.00E+00	0.96	2.99	N.A.	0.0	1(0.75) 11
13	319	STD. FW. HEATER	4.09E+06	0.00E+00	0.96	3.56	N.A.	0.0	1(0.75) 47
A	16	STD. CONDENSER	8.23E+07	6.12E+06	0.96	10.07	N.A.	0.0	N.A.
B	17	STD. CONDENSER	1.30E+08	0.00E+00	0.97	1.93	N.A.	0.0	N.A.
C	18	STD. CONDENSER	9.27E+07	3.87E+06	0.92	8.38	N.A.	0.0	N.A.

* HEAT TRANSFER/DEG IS SIMILAR TO UA. SEE VOL 1 OUTPUT DESCRIPTION.
\# PERFORMANCE INDEX IS SIMILAR TO EFFECTIVENESS. SEE VOL 1 OUTPUT DESCRIPTION.

IP7019102

DETAILED FEEDWATER HEATER PERFORMANCE OUTPUT - TABLE B

HTR NO.	COMP NO.	COMPONENT DESCRIPTION	HEAT XFER TO FW OR TUBE CND (BTU/HR)	ENTHALPY RISE FW.OR CND T (BTU/LBM)	ENTHALPY DROP EXT STEAM (BTU/LBM)	MASS FLOWS TO HEATER SHELL (LBM/HR)	MASS FLOWS RATE HEATER DRAIN IN (LBM/HR)	MASS FLOWS RATE THRU TUBES (LBM/HR)
1	19	STD. FW. HEATER	6.23E+07	36.3	979.2	63659.	0.	1715628.
2	20	FWHT. BACK-DRAIN	2.04E+08	39.7	1029.7	170143.	492721.	5145855.
3	21	FWHT. BACK-DRAIN	3.61E+08	70.1	1054.4	334609.	158112.	5145855.
4	22	FWHT. BACK-DRAIN	1.65E+08	32.2	1046.7	158112.	0.	5145855.
5	23	CONTACT HEATER	2.45E+08	47.6	1024.9	220577.	1335044.	5145855.
6	24	FW. W/DESUP+COOL	1.65E+08	51.8	1096.6	122411.	546374.	3185399.
7	25	FW. W/DESUP+COOL	1.65E+08	51.7	1092.1	125853.	540406.	3185399.
8	26	FW. W/DESUP+COOL	2.89E+08	90.7	925.9	286051.	260323.	3185399.
9	27	FW. W/DESUP+COOL	2.82E+08	88.6	927.2	278209.	262197.	3185399.
10	28	FW. W/DESUP+COOL	2.33E+08	73.2	895.6	260323.	0.	3185399.
11	29	FW. W/DESUP+COOL	2.35E+08	73.8	896.2	262197.	0.	3185399.
12	219	STD. FW. HEATER	6.42E+07	37.4	1013.7	63332.	0.	1715114.
13	319	STD. FW. HEATER	6.18E+07	36.1	981.3	63026.	0.	1715114.
A	16	STD. CONDENSER	1.46E+09	15.3	970.7	1353662.	981493.	95771455.
B	17	STD. CONDENSER	1.31E+09	27.3	968.5	1348895.	0.	47878545.
C	18	STD. CONDENSER	1.40E+09	14.6	966.1	1358232.	3835928.	95771455.

IP7019103

DETAILED HEAT EXCHANGER PERFORMANCE OUTPUT

COMPONENT NUMBER	COMPONENT DESCRIPTION	HEAT EXCH SHELL LOSSES (BTU/HR)	HEAT TO TUBE SIDE FLUID (BTU/HR)	HEAT EXCH PERF INDEX# (-)	PRESSURE DROP TUBE (P S I)	PRESSURE DROP SHELL (P S I)
15	FOSSIL REHEATER	0.0000	1.1751E+09	N.A.	41.489	N.A.
30	GEN. HT. EXCH.	0.0000	8.9439E+06	0.9309	0.000	274.222
31	EXT. DRAIN COOL.	0.0000	3.3116E+07	0.8519	0.000	0.000
32	SPEC. HT. EXCH.	0.0000	0.0000E+00	N.A.	0.000	N.A.
33	SPEC. HT. EXCH.	0.0000	0.0000E+00	N.A.	0.000	N.A.

PERFORMANCE INDEX IS SIMILAR TO EFFECTIVENESS. SEE VOL 1 OUTPUT DESCRIPTION.

IP7019104

DETAILED SOURCE, SINK, AND VALVE PERFORMANCE OUTPUT

COMP NO.	COMPONENT DESCRIPTION	FLOW (LBM/HR)	PRESSURE (PSIA)	TEMP/ QUALITY (F/-)	PRESS. DROP (PSI)	PRESS. DROP FRAC. (-)	POSITION (-)
39	THROTTLE VALVE	6732560.	N.A.	N.A.	62.76	0.02746	OPEN
59	INPUT COMPONENT	6732560.	2285.8	1001.2	N.A.	N.A.	N.A.
60	INFINITE SOURCE	143650000.	50.0	72.3	N.A.	N.A.	N.A.
63	INFINITE SINK	143650000.	50.0	108.9	N.A.	N.A.	N.A.
64	OUTPUT COMPONENT	6370798.	2699.6	549.3	N.A.	N.A.	N.A.
176	INFINITE SOURCE	17220.	15.0	60.0	N.A.	N.A.	N.A.
400	INFINITE SINK	378982.	2828.8	354.6	N.A.	N.A.	N.A.
416	INFINITE SINK	0.	133.8	349.6	N.A.	N.A.	N.A.
417	INFINITE SINK	0.	133.8	349.6	N.A.	N.A.	N.A.

DETAILED THROTTLE VALVE PERFORMANCE OUTPUT

THROTTLE FLOW RATIO

COMPONENT NUMBER	EQUIVALENT (-)	ACTUAL (-)	FIRST ADMISSION (-)
39	1.033953	0.975733	1.000000

IP7019105

DETAILED PUMP/COMPRESSOR PERFORMANCE OUTPUT

COMP NO.	COMPONENT DESCRIPTION	PUMP/COMP EFFICIENCY (-)	LINKAGE/ DRIVER EFFIC (-)	PRESSURE RISE (PSI)	ENTH RISE (BTU/LBM)	DRIVER POWER (KW)	GLAND/SEAL LOSSES (BTU/HR)
34	STD. ELE. PUMP	0.7714	1.0000 0.9500	162.31	0.70	7.2358E+02	0.0000
35	STD. ELE. PUMP	0.7714	1.0000 0.9500	162.31	0.70	7.2358E+02	0.0000
37	STM. DRIVEN PUMP	0.8000	0.9800 0.8618	2531.60	10.47	1.0567E+04	0.0000
38	STM. DRIVEN PUMP	0.8000	0.9800 0.7595	2533.70	10.48	1.0576E+04	0.0000
42	STD. ELE. PUMP	1.0000	1.0000 0.9500	433.35	1.30	1.0399E+03	0.0000
43	STD. ELE. PUMP	1.0000	1.0000 0.9500	433.35	1.30	1.0399E+03	0.0000

IP7019106

PERFORMANCE SUMMARY OF GENERATORS

TURBINE CYCLE GENERATOR NUMBER

	1	2	3	4	5	TOTALS
GR. WHEEL POW,BTU/HR	3.285E+09					3.285E+09
AUX. TURB SHAFT LOAD,BTU/HR	0.000E+00					0.000E+00
NET TURB WHEEL POW (GEN W/O LOSSES) BTU/HR	3.285E+09					3.285E+09
GEN. POWER W/O LOSSES, MWE	962.600					962.600
GEAR BOX LOSSES, MWE	0.000					0.000
GEAR BOX OUTPUT POWER, MWE	N.A.					N.A.
GEN. MECHANICAL LOSSES, MWE	4.528					4.528
GEN. ELECTRICAL LOSSES, MWE	8.474					8.474
GEN. TOTAL LOSSES, MWE	13.002					13.002
GEN. + GEAR BOX LOSSES, MWE	13.002					13.002
GROSS GENERATOR POWER, MWE	949.598					949.598

IP7019107

FIRST LAW OF THERMODYNAMICS PERFORMANCE - ENVELOPE 1

TERM

	HEAT SUPPLIED (ALL UNITS ARE BTU/HR) -		
	MAKEUP HEATS BY FLOW ## INTO THE ENVELOPE		
1	AT SOURCE/SINK COMPONENT, USER ID 60	-1.51451E+11	
2	AT SOURCE/SINK COMPONENT, USER ID 176	-1.83685E+07	
3	AT SOURCE/SINK COMPONENT, USER ID 59	2.50065E+09	
	LETDOWN HEATS BY FLOW ## FROM THE ENVELOPE		
4	AT SOURCE/SINK COMPONENT, USER ID 63	-1.46203E+11	
5	AT SOURCE/SINK COMPONENT, USER ID 417	0.00000E+00	
6	AT SOURCE/SINK COMPONENT, USER ID 416	0.00000E+00	
7	AT SOURCE/SINK COMPONENT, USER ID 400	-2.89540E+08	
8	AT SOURCE/SINK COMPONENT, USER ID 64	-3.49910E+09	
9	NET HEAT TO ENVELOPE BY FLOW		1.02345E+09
10	CONDENSER COOLING LOAD CREDIT (HEAT IN)	4.17065E+09	
11	FURNACE UNACCOUNTED HEAT LOSSES	0.00000E+00	
12	BOILER REHEAT (TYPE 25 COMPONENTS)	1.17506E+09	
13	UNSPECIFIED HEAT EXCHANGERS (HEAT IN)	0.00000E+00	
14	COMPONENT VESSEL LOSSES	0.00000E+00	
15	PIPE HEAT AND ELEVATION LOSSES	-1.07682E+09	
16	PUMP/COMP/FAN INEFFICIENCY LOSSES	2.04461E+06	
17	PUMP GLANDS AND SEALS LOSSES	0.00000E+00	
18	GENERATOR HYD AND OIL COOLER (HEAT IN)	0.00000E+00	
19	HEAT IN AS ELECTRIC PUMP/COMP/FAN POWER	1.20343E+07	
20	NET POWER SUPPLIED		7.45597E+09
	POWER OUT (ALL UNITS ARE MWE) -		
21	NET TURBINE WHEEL POWER TO GENERATORS	9.62600E+02	
22	APPORTIONED GENERATOR MECHANICAL LOSSES	4.52800E+00	
23	APPORTIONED GENERATOR ELECTRICAL LOSSES	8.47387E+00	
24	GROSS GENERATOR POWER		9.49598E+02
25	ELECTRIC POWER USED FOR PUMP/COMP/FAN	3.52691E+00	
26	APP HOUSE LOAD EXC ELEC PUMP/COMP/FAN	0.00000E+00	
27	NET GENERATOR POWER		9.46071E+02

ENVELOPE PERFORMANCE, EFFICIENCY, - 4.32959E-01

ENVELOPE PERFORMANCE, HEAT RATE, BTU/KW-HR 7.88098E+03

BY DEFAULT, EFFICIENCY IS DEFINED AS (NET GENERATOR POWER / NET POWER SUPPLIED)
BY DEFAULT, HEAT RATE IS DEFINED AS (NET POWER SUPPLIED / NET GENERATOR POWER)

HEAT BY FLOW IS A COMPOSITE TERM, COMPUTED FROM THE EXPRESSION:
FLOW RATE X (ENTHALPY - REFERENCE ENTHALPY + LOWER HEATING VALUE)
THE REFERENCE AND HEATING VALUE TERMS ARE REQUIRED FOR CHEMICALLY REACTING

IP70191108

FIRST LAW OF THERMODYNAMICS PERFORMANCE - SYSTEM

HEAT SUPPLIED (ALL UNITS ARE BTU/HR) -		
BOILER HEAT TO WORKING FLUID	$ 5.99974E+09	
1ST BOILER REHEAT (IN, TYPE 25 COMPONENT)	1.17506E+09	
2ND BOILER REHEAT (IN, TYPE 25 COMPONENT)	0.00000E+00	
UNSPECIFIED HEAT EXCHANGERS (HEAT IN)	0.00000E+00	
GROSS HEAT SUPPLIED	$	7.17481E+09
MAKEUP HEAT (BY FLOW ## IN)	-1.51469E+11	
LETDOWN HEAT (BY FLOW ## OUT)	-1.46493E+11	
CONDENSER COOLING LOAD CREDIT (HEAT IN)	4.17065E+09	
COMPONENT VESSEL LOSSES	0.00000E+00	
PIPE HEAT AND ELEVATION LOSSES	-1.07682E+09	
PUMP/COMP/FAN INEFFICIENCY LOSSES	2.04461E+06	
PUMP GLANDS AND SEALS LOSSES	0.00000E+00	
GENERATOR HYD AND OIL COOLER (HEAT IN)	0.00000E+00	
NET HEAT SUPPLIED		7.44394E+09
HEAT IN AS ELECTRIC PUMP/COMP/FAN POWER	1.20343E+07	
NET POWER SUPPLIED		7.45597E+09

POWER OUT (ALL UNITS ARE MWE) -		
NET TURBINE WHEEL POWER TO GENERATORS	962.600	
GENERATOR MECHANICAL LOSSES	4.528	
GENERATOR ELECTRICAL LOSSES	8.474	
GROSS GENERATOR POWER		949.598
ELECTRIC POWER USED FOR PUMP/COMP/FAN	3.527	
HOUSE LOAD POWER, EXCLUDING ELEC PUMP/COMP/FAN	0.000	
(EXCEPTION: INCLUDES COOLING TOWER FAN POWER)		
NET GENERATOR POWER		946.071

SYSTEM PERFORMANCE	THERMAL EFF. (-)	HEAT RATE (BTU/KW-HR)
GROSS ACTUAL TURBINE CYCLE		
(GROSS HEAT SUPPLIED / GROSS GENERATOR POWER)	0.45160	$ 7556.
NET ACTUAL TURBINE CYCLE		
(MOD NET POWER SUPPLIED / NET GENERATOR POWER)	0.50588	6745.
TURBINE CYCLE STEAM RATE, LBM/KW-HR		7.0899

NOTE: MOD NET POWER SUPPLIED = NET POWER SUPPLIED + COMPONENT VESSEL LOSSES + PIPE HEAT AND ELEVATION LOSSES + PUMP INEFFICIENCY LOSSES + PUMP GLANDS AND SEALS LOSSES

$ CAUTION INTERPRETING BOILER HEAT AND GROSS HEAT RATE AND EFFICIENCY

IP7019109

CYCLE SUMMARY

GENERATION (MW)		ENERGY SUMMARY (MBTU/HR) *	
Generator 1	949.598	Input Component	2500.648
		Output Component	-3499.096
TOTAL CYCLE	949.598	Steam Reheat	1175.063
		NET SUPPLIED CYCLE	7174.808

HEAT RATE (BTU/KW-HR) **		MISCELLANEOUS	
Cycle	7556	Backpressure (in.hga)	
Steam Turbine	7556	Cond 1	2.61
		Cond 2	2.34
		Cond 3	3.23

* All terms except "Fuel Input (lhv)" calcd using w*(h-href+hvall). The term, Fuel Input (lhv), is w*hvall, where hvall is lower heating value.

** Heat rates are defined as:

Cycle = {Energy In (Input Component) - Energy Out (Output Component) + Steam Reheat Energy} / Total Cycle Generation (After Gen Losses)

Steam Turbine = {Energy In (Input Component) - Energy Out (Output Component) + Steam Reheat Energy} / Steam Turbine Generation (After Gen Losses)

IP7019110

SECOND LAW OF THERMODYNAMICS PERFORMANCE - SYSTEM
(TTDEAD = 5.00000E+01 DEG F)

SUMMARY FOR CYCLE SUBSYSTEMS

SUBSYSTEM	POTENTIAL FOR POWER MAXIMUM (BTU/HR)	POTENTIAL FOR POWER RELATIVE (-)	IRREVERSIBILITY ACTUAL (BTU/HR)	IRREVERSIBILITY RELATIVE (-)	EFFECT-IVENESS (-)
CLASS 0 - TURBINES	3.590154E+09	1.2272	3.056278E+08	-0.8809	0.9149
CLASS 1 - FW HEATERS	1.377039E+08	0.0471	1.377039E+08	-0.3969	0.9032
CLASS 2 - HEAT EXCHANGERS	-8.082080E+08	-0.2763	-8.082080E+08	2.3294	0.5881
CLASS 3 - VALVES ONLY	9.435716E+06	0.0032	9.435716E+06	-0.0272	
CLASS 4 - PUMPS	1.499895E+07	0.0051	2.703325E+07	-0.0779	
CLASS 5 - MIXERS	-3.205075E+07	-0.0110	-3.205075E+07	0.0924	
CLASS 6 - SPLITTERS	3.443633E+06	0.0012	3.443633E+06	-0.0099	
CLASS 7 - MISC COMPONENTS	0.000000E+00	0.0000	0.000000E+00	0.0000	
STREAMS	1.005352E+07	0.0034	1.005352E+07	-0.0290	
TOTALS	2.925531E+09	1.0000	-3.469610E+08	1.0000	

CYCLE PERFORMANCE

NET AVAILABILITY INFLUX, BTU/HR	3.053347E+09	
CONSTRUCTIVE ADDITIONS, BTU/HR	-1.278159E+08	
MAXIMUM POTENTIAL POWER, BTU/HR		2.925531E+09
TOTAL IRREVERSIBILITY, BTU/HR	(-3.469610E+08)	
NET CYCLE POWER, BTU/HR		3.272492E+09
FIRST LAW RESULT (NET TURBINE WHEEL POWER LESS ELECTRIC POWER USED FOR PUMP/COMP/FAN), BTU/HR		3.272492E+09
CYCLE EFFECTIVENESS		1.1186

IP7019111

SPECIAL OUTPUT TABLE OF SPECIFIED VARIABLES

INDEX	DESCRIPTION	VARIABLE(ID)	VALUE	UNITS
122	GROSS GENERATOR POWER	BKGROS(0)	949.598	MW
126	1ST STAGE PRESSURE inlet	PP (118)	2223.1	PSIA
127	7TH STAGE SHELL PRESSURE	PP (4)	612.3	PSIA
128	IP INLET PRESSURE	PP (67)	570.8	PSIA
129	14TH STAGE SHELL PRESSURE	PP (777)	136.56	PSIA
130	HP TURB PR RATIO	OPVB (170)	2.65	Not-Specd
131	IP TURB PR RATIO	OPVB (171)	4.18	Not-Specd
132	REHEAT PRESSURE DROP	OPVB (173)	677.5460	Not-Specd
135	BOILER BLOWDOWN FLOW	OPVB (20)	17220.	NO-UNITS
136	CYCLE LOSSES	OPVB (24)	0.	Not-Specd
137	CYCLE MAKEUP FLOW	WW (214)	17220.	LBM/HR
138	FLUE GAS REHEAT FLOW	WW (194)	0.	LBM/HR
139	AIR PREHEAT FLOW	WW (192)	0.	LBM/HR
140	BOILER FEED FLOW	WW (114)	6370798.	LBM/HR
141	SH ATTEMP FLOW	WW (609)	378982.	LBM/HR
142	RH ATTEMP FLOW	WW (610)	0.	LBM/HR
150	NET TURBINE CYCLE HEAT RATE	OPVB (114)	7883.68	Not-Specd
198	H2 PRESSURE	PPGNH2(1)	64.20	PSIA
199	POWER FACTOR	POWFAC(1)	0.99	NO-UNITS
300	Throttle Valve Press Drop	PDRPL (39)	0.0275	NO-UNITS

IP7019112

```
LISTING OF INPUT DATA FOR CASE  3

*
=
*
000200   1  2  10  4
                                        *** LINE ABOVE IS A REPLACEMENT LINE. ***
*
*
****************************
*  GENERIC INPUT DATA
****************************
*
*
*
****************************
*  STREAMS
****************************
*
*
*
****************************
*  COMPONENTS
****************************
*
*
*
****************************
*  SPECIAL FEATURES
****************************
*
*
*
*
*
* hp section outlet enthalpy
840900 WWVSC  59  6900000.  0.5  0.0 HH  -59
                                        *** LINE ABOVE IS A REPLACEMENT LINE. ***
840905    0  0
                                        *** LINE ABOVE IS A REPLACEMENT LINE. ***
840906    0  0.0
                                        *** LINE ABOVE IS A REPLACEMENT LINE. ***
840908  DELETE
                                        *** LINE ABOVE IS A REPLACEMENT LINE. ***
840909    0.0  0.0
                                        *** LINE ABOVE IS A REPLACEMENT LINE. ***
*
*
*
* POWER FACTOR TO 0.90
870630   0.9
870638
*
* H2 PRESS GAIN MULTIPLIER
```

IP7019113

```
880215    0  0  0.0
*
* MAKEUP FLOW CALC
880230    WW  421   ADD   WW  416   OPVB  24
                                     *** LINE ABOVE IS A REPLACEMENT LINE. ***
880231    0.0  0.0  0.0
                                     *** LINE ABOVE IS A REPLACEMENT LINE. ***
880235    0  0  0.0
                                     *** LINE ABOVE IS A REPLACEMENT LINE. ***
*
* MAKEUP FLOW CALC
880240    OPVB  24   ADD   OPVB  20   WWVSC  176
880241    0.0  0.0  0.0
880245    0  0  0.0
*
* TEST FGR FLOW CALC
880300    OPVB  30   MUL   WW  59   WWFIXB  145
880301    0.0  0.0  0.0
880305    0  0  0.0
*
* TEST APH FLOW CALCULATION
880400    OPVB  40   MUL   WW  59   WWFIXB  144
880401    0.0  0.0  0.0
880405    0  0  0.0
*
* TEST APH RETURN TEMP
880420    OPVB  41   EQL   TTTORH  32
880421    0.0  0.0  0.0
880425    0  0  0.0
*
* TEST SH SPRAY FLOW CALC
880500    OPVB  50   MUL   WW  59   WWFIXB  608
880501    0.0  0.0  0.0
880505    0  0  0.0
*
* TEST CGR LOSS FLOW CALC
880600    OPVB  60   MUL   WW  59   WWFIXB  415
880601    0.0  0.0  0.0
880605    0  0  0.0
*
* TEST APH LOSS FLOW CALC
880610    OPVB  61   MUL   WW  59   WWFIXB  413
880611    0.0  0.0  0.0
880615    0  0  0.0
*
* POWER FACTOR CORRECTION TO 0.90
880620    OPVB  63   EQL   POWFAC  1
880621    0.0  0.0  0.0
880625    0  0  0.0
*
* H2 PRESSURE CORRECTION CALC
881930    PPGNHR  1   SUB   PPGNH2  1   OPVB  193
                                     *** LINE ABOVE IS A REPLACEMENT LINE. ***
881931    0.0  0.0  0.0
```

IP7019114

```
                                        *** LINE ABOVE IS A REPLACEMENT LINE. ***
881961    0.0  0.0  0.0
                                        *** LINE ABOVE IS A REPLACEMENT LINE. ***
881965    0  0  0.0
                                        *** LINE ABOVE IS A REPLACEMENT LINE. ***
*
* H2 PRESSURE CORRECTION TO DESIGN 63 PSIG
881990    OPVB  198   EQL   PPGNH2  1
881991    0.0  0.0  0.0
881995    0  0  0.0
*
*
******************************
*   SPECIAL OPTIONS
******************************
*
*
*
850000
                                        *** LINE ABOVE IS A REPLACEMENT LINE. ***
*
850008
*
* INDIVIDUAL SPECIAL OPTION DELETION
850009   2
*
*
*
*
*
*
*********************************************************************
*    SPECIAL OPTION 6 (TEST DATA REDUCTION OPTION) STANDARDIZATION CASE
*********************************************************************
*
= U2 Corr Test  ALSTOM Test
*
*
*
/
```

IP7019115

INPUT SCHEDULE NUMBER 1 TABLE OF VALUES

EXHAUST LOSS VS. ANNULUS VELOCITY

UNIVARIATE TABLE OF Y VERSUS X

VALUES OF X

2.350E+02	2.750E+02	3.000E+02	3.200E+02	3.550E+02	3.810E+02	4.080E+02
4.400E+02	4.820E+02	5.050E+02	5.350E+02	5.700E+02	6.000E+02	6.300E+02
6.600E+02	7.000E+02	7.550E+02	8.780E+02	9.550E+02	1.210E+03	

VALUES OF Y

4.750E+01	3.800E+01	3.300E+01	3.000E+01	2.500E+01	2.200E+01	1.900E+01
1.600E+01	1.300E+01	1.180E+01	1.060E+01	1.000E+01	9.800E+00	1.000E+01
1.060E+01	1.180E+01	1.400E+01	2.000E+01	2.400E+01	3.800E+01	

INPUT SCHEDULE NUMBER 4 TABLE OF VALUES

GENERATOR LOSS VS MW

BIVARIATE TABLE OF Y VERSUS X
WITH Z AS A PARAMETER

VALUES OF X

2.500E+05	3.000E+05	3.500E+05	4.000E+05	4.500E+05	5.000E+05	5.500E+05
6.000E+05	6.500E+05	7.000E+05	7.500E+05	8.000E+05	8.500E+05	9.000E+05
9.500E+05	1.000E+06					

VALUES OF Z	VALUES OF Y					
9.000E-01	3.847E+03	4.021E+03	4.229E+03	4.470E+03	4.747E+03	5.058E+03
	5.406E+03	5.791E+03	6.213E+03	6.673E+03	7.171E+03	7.710E+03
	8.288E+03	8.907E+03	9.568E+03	1.027E+04		
9.700E-01	3.792E+03	3.941E+03	4.120E+03	4.327E+03	4.563E+03	4.830E+03
	5.127E+03	5.456E+03	5.816E+03	6.208E+03	6.633E+03	7.092E+03
	7.584E+03	8.111E+03	8.672E+03	9.270E+03		
9.800E-01	3.785E+03	3.931E+03	4.106E+03	4.309E+03	4.540E+03	4.801E+03
	5.092E+03	5.414E+03	5.766E+03	6.150E+03	6.566E+03	7.015E+03
	7.496E+03	8.011E+03	8.561E+03	9.145E+03		
9.900E-01	3.778E+03	3.922E+03	4.093E+03	4.291E+03	4.518E+03	4.773E+03

IP7019116

(A) HAS ADDITION AFTER MULTIPLICATION
(B) HAS ADDITION BEFORE MULTIPLICATION

IP7019117

INPUT SCHEDULE NUMBER 14 TABLE OF VALUES

SSR flow over load

UNIVARIATE TABLE OF Y VERSUS X

VALUES OF X

2.172E+06	3.332E+06	4.984E+06	6.726E+06	6.750E+06	6.900E+06

VALUES OF Y

0.000E+00	0.000E+00	4.309E+03	9.414E+03	9.483E+03	9.910E+03

INPUT SCHEDULE NUMBER 15 TABLE OF VALUES

Injection water flow to BFP over load

UNIVARIATE TABLE OF Y VERSUS X

VALUES OF X

2.172E+06	3.332E+06	4.984E+06	6.726E+06	6.750E+06	6.900E+06

VALUES OF Y

2.672E+04	3.252E+04	4.039E+04	4.826E+04	4.841E+04	4.903E+04

IP7019118

VARIABLE REFERENCES TO SCHEDULE TABLES
(CALCULATIONS BEGIN AT ITRSCH = 2)

SCHEDULE VBLS. ID	TBL.# REFD.	Y VAR.	LOCATION USER ID	X VAR.	LOCATION USER ID	Z VAR.	LOCATION USER ID	INTRVL/ SPCL INIT
1	1	EXUSLS	12	VEANP	12			1/NO
2	1	EXUSLS	13	VEANP	13			1/NO
3	1	EXUSLS	14	VEANP	14			1/NO
6	4	OPVB	195	BKGROS	0	POWFAC	1	1/NO
16	14	WWFIXB	141	WWVSC	59			1/NO
17	15	WWFIXB	44	WWVSC	59			1/NO

* SPCL INIT (YES) - PRIOR TO FIRST ITERATE AT USER OPTION

IP7019119

DEFINITIONS OF SPECIAL OPERATIONS SPECIFIED
(CALCULATIONS BEGIN AT ITROPS = 2)

OPER-ATION ID	FIRST VARIABLE (ID)	OPERATION	SECOND VARIABLE (ID)	=	RESULT VARIABLE(ID)	INTERVAL/ SPCL INIT*
1	PP (81)	EQL		=	PPSTRU(146)	1/NO
2	PP (-146)	PTH	TT (-146)	=	OPVB (1)	1/NO
3	PP (81)	SHF		=	OPVB (2)	1/NO
4	PP (81)	SHG		=	OPVB (3)	1/NO
5	OPVB (1)	SUB	OPVB (2)	=	OPVB (4)	1/NO
6	OPVB (3)	SUB	OPVB (2)	=	OPVB (5)	1/NO
7	OPVB (4)	DIV	OPVB (5)	=	OPVB (6)	1/NO
8	WW (146)	MUL	OPVB (6)	=	WWFIXB(65)	1/NO
9	OPVB (3)	EQL		=	HHFIXB(65)	1/NO
10	WWFIXB(65)	BIF	OPVB (8)	=	OPVB (7)	1/NO
11	WWFIXB(65)	MUL	OPVB (7)	=	WWFIXB(65)	1/NO
21	OPVB (21)	MUL	WW (59)	=	OPVB (20)	1/NO
23	WW (421)	ADD	WW (416)	=	OPVB (24)	1/NO
24	OPVB (24)	ADD	OPVB (20)	=	WWVSC (176)	1/NO
30	OPVB (30)	MUL	WW (59)	=	WWFIXB(145)	1/NO
40	OPVB (40)	MUL	WW (59)	=	WWFIXB(144)	1/NO
42	OPVB (41)	EQL		=	TTTORH(32)	1/NO
50	OPVB (50)	MUL	WW (59)	=	WWFIXB(608)	1/NO
60	OPVB (60)	MUL	WW (59)	=	WWFIXB(415)	1/NO
61	OPVB (61)	MUL	WW (59)	=	WWFIXB(413)	1/NO
62	OPVB (63)	EQL		=	POWFAC(1)	1/NO
100	WW (59)	SUB	WW (609)	=	OPVB (100)	1/NO
101	HH (59)	SUB	HH (114)	=	OPVB (101)	1/NO
102	OPVB (100)	MUL	OPVB (101)	=	OPVB (102)	1/NO
103	HH (15)	SUB	HH (613)	=	OPVB (103)	1/NO
104	WW (613)	MUL	OPVB (103)	=	OPVB (104)	1/NO
105	HH (59)	SUB	HH (106)	=	OPVB (105)	1/NO
106	WW (609)	MUL	OPVB (105)	=	OPVB (106)	1/NO
107	PP (114)	PTH	OPVB (99)	=	OPVB (107)	1/NO
108	OPVB (107)	SUB	HH (114)	=	OPVB (108)	1/NO
109	OPVB (20)	MUL	OPVB (108)	=	OPVB (109)	1/NO
110	OPVB (102)	ADD	OPVB (104)	=	OPVB (110)	1/NO
111	OPVB (106)	ADD	OPVB (109)	=	OPVB (111)	1/NO
112	OPVB (110)	ADD	OPVB (111)	=	OPVB (112)	1/NO
113	BKNET (0)	MUL	OPVB (10)	=	OPVB (113)	1/NO
114	OPVB (112)	DIV	OPVB (113)	=	OPVB (114)	1/NO
150	VV (22)	MUL	OPVB (150)	=	OPVB (151)	1/NO
151	OPVB (151)	MUL	WW (22)	=	OPVB (152)	1/NO
155	VV (207)	MUL	OPVB (150)	=	OPVB (156)	1/NO
156	OPVB (156)	MUL	WW (207)	=	OPVB (157)	1/NO
160	PP (4)	PSH	SS (59)	=	OPVB (165)	1/NO

IP7019120

* SPCL INITIATION (YES) - PRIOR TO FIRST ITERATE AT USER OPTION

IP7019121

DEFINITIONS OF SPECIAL OPERATIONS SPECIFIED
(CALCULATIONS BEGIN AT ITROPS = 2)

OPER-ATION ID	FIRST VARIABLE (ID)	OPERATION	SECOND VARIABLE (ID)	=	RESULT VARIABLE(ID)	INTERVAL/ SPCL INIT*
187	OPVB (184)	SUB	OPVB (186)	=	OPVB (187)	1/NO
189	OPVB (184)	SUB	HH (97)	=	OPVB (189)	1/NO
190	OPVB (189)	DIV	OPVB (187)	=	OPVB (190)	1/NO
193	PPGNHR(1)	SUB	PPGNH2(1)	=	OPVB (193)	1/NO
194	OPVB (193)	MUL	OPVB (192)	=	OPVB (194)	1/NO
196	OPVB (195)	SUB	OPVB (194)	=	BKELEI(1)	1/NO
199	OPVB (198)	EQL		=	PPGNH2(1)	1/NO

* SPCL INITIATION (YES) - PRIOR TO FIRST ITERATE AT USER OPTION

******** The following input lines were not used.

880155
880151
880150
850601
850200
850002
842509
842506
842505
842500
842409
842406
842405
842400
842309
842306
842305
842300
842209
842206
842205
842200
842109
842106
842105
842100
842000

IP70191 22

841700
841609
841606
841605
841600
841509
841506
841505
841500
841409
841406
841405
841400
841309
841306
841305
841300
841209
841206
841205
841200
841109
841106
841105
841100
841009
841006
841005
841000
840909
840906
840905
840900
840809
840806
840805
840800
840709
840706
840705
840700
840609
840606
840605
840600
840509
840506
840505
840500
840409
840406
840405
840400
840300

IP70191 23

831301
831300
831202
831201
831200
831102
831101
831100
831002
831001
831000
830902
830901
830900
830802
830801
830800
830702
830701
830700
830402
830401
830400
821301
821300
821201
821200
821101
821100
821001
821000
820901
820900
820801
820800
820701
820700
820601
820600
820501
820500
820201
820200
811312
811311
811310
811302
811301
811300
811212
811211
811210
811202
811201

IP70191124

```
810910
810901
810900
810811
810810
810801
810800
810711
810710
810701
810700
810611
810610
810601
810600
810510
810500
810210
810200


*** WARNING FROM CAT20 ROUTINE ***
    For DEMAND SPLITTER, component type  60, with
    ID = 117, demand reference citations have been
    made from two locations in the model.  This is not
    allowed.  One demand supplier can respond to only
    one component or stream that demands a flow
    adjustment.

    The current demand references are made by:
    a COMPONENT Type =  60, with ID = 142
    a COMPONENT Type =  60, with ID = 143

    In order to continue calculations, the demand
    reference made by the second item above is being
    reset to zero.  This reset may not be desirable.

    You need to change at least one of the references
    that are made to this demand splitter.
*** END OF WARNING ***
```

IP7019125

SCHEDULED VARIABLE VALUES CALCULATED

SCHEDULE VARIABLES ID	Y VALUE USED FOR ITERATE 19	X VALUE FROM ITERATE 18	Z VALUE FROM ITERATE 18
1	EXUSLS(12) 4.29271E+01	VEANP (12) 1.29974E+03	
2	EXUSLS(13) 2.56770E+01	VEANP (13) 9.85545E+02	
3	EXUSLS(14) 1.43969E+01	VEANP (14) 7.63136E+02	
6	OPVB (195) 1.02286E+04	BKGROS(0) 9.97036E+02	POWFAC(1) 9.00000E-01
16	WWFIXB(141) 1.05769E+04	WWVSC (59) 7.13426E+06	
17	WWFIXB(44) 4.99983E+04	WWVSC (59) 7.13426E+06	

IP7019126

OPERATION SET VALUES CALCULATED
AT THE START OF ITERATION 19

OPER-ATION ID	VARIABLE (ID) VALUE	OPERATION	VARIABLE (ID) VALUE	=	VARIABLE (ID) VALUE
1	PP (81) 5.79673E+00	EQL		=	PPSTRU(146) 5.79673E+00
2	PP (-146) 1.04606E+01	PTH	TT (-146) 1.75349E+02	=	OPVB (1) 1.43359E+02
3	PP (81) 5.79673E+00	SHF		=	OPVB (2) 1.36493E+02
4	PP (81) 5.79673E+00	SHG		=	OPVB (3) 1.13328E+03
5	OPVB (1) 1.43359E+02	SUB	OPVB (2) 1.36493E+02	=	OPVB (4) 6.86527E+00
6	OPVB (3) 1.13328E+03	SUB	OPVB (2) 1.36493E+02	=	OPVB (5) 9.96790E+02
7	OPVB (4) 6.86527E+00	DIV	OPVB (5) 9.96790E+02	=	OPVB (6) 6.88738E-03
8	WW (146) 7.08003E+05	MUL	OPVB (6) 6.88738E-03	=	WWFIXB(65) 4.87628E+03
9	OPVB (3) 1.13328E+03	EQL		=	HHFIXB(65) 1.13328E+03
10	WWFIXB(65) 4.87628E+03	BIF	OPVB (8) 0.00000E+00	=	OPVB (7) 1.00000E+00
11	WWFIXB(65) 4.87628E+03	MUL	OPVB (7) 1.00000E+00	=	WWFIXB(65) 4.87628E+03
21	OPVB (21) 2.55772E-03	MUL	WW (59) 7.13426E+06	=	OPVB (20) 1.82474E+04

IP7019127

OPERATION SET VALUES CALCULATED
AT THE START OF ITERATION 19

OPER-ATION ID	VARIABLE (ID) VALUE	OPERATION	VARIABLE (ID) VALUE	=	VARIABLE (ID) VALUE
23	WW (421) 0.00000E+00	ADD	WW (416) 0.00000E+00	=	OPVB (24) 0.00000E+00
24	OPVB (24) 0.00000E+00	ADD	OPVB (20) 1.82474E+04	=	WWVSC (176) 1.82474E+04
30	OPVB (30) 0.00000E+00	MUL	WW (59) 7.13426E+06	=	WWFIXB(145) 0.00000E+00
40	OPVB (40) 0.00000E+00	MUL	WW (59) 7.13426E+06	=	WWFIXB(144) 0.00000E+00
42	OPVB (41) 7.81904E+01	EQL		=	TTTORH(32) 7.81904E+01
50	OPVB (50) 5.66654E-02	MUL	WW (59) 7.13426E+06	=	WWFIXB(608) 4.04266E+05
60	OPVB (60) 0.00000E+00	MUL	WW (59) 7.13426E+06	=	WWFIXB(415) 0.00000E+00
61	OPVB (61) 0.00000E+00	MUL	WW (59) 7.13426E+06	=	WWFIXB(413) 0.00000E+00
62	OPVB (63) 9.00000E-01	EQL		=	POWFAC(1) 9.00000E-01
100	WW (59) 7.13426E+06	SUB	WW (609) 4.04266E+05	=	OPVB (100) 6.73000E+06
101	HH (59) 1.46121E+03	SUB	HH (114) 5.53172E+02	=	OPVB (101) 9.08035E+02
102	OPVB (100) 6.73000E+06	MUL	OPVB (101) 9.08035E+02	=	OPVB (102) 6.11107E+09

IP7019128

OPERATION SET VALUES CALCULATED
AT THE START OF ITERATION 19

OPER-ATION ID	VARIABLE (ID) VALUE	OPERATION	VARIABLE (ID) VALUE	=	VARIABLE (ID) VALUE
103	HH (15) 1.51807E+03	SUB	HH (613) 1.31089E+03	=	OPVB (103) 2.07180E+02
104	WW (613) 5.89225E+06	MUL	OPVB (103) 2.07180E+02	=	OPVB (104) 1.22075E+09
105	HH (59) 1.46121E+03	SUB	HH (106) 3.34118E+02	=	OPVB (105) 1.12709E+03
106	WW (609) 4.04266E+05	MUL	OPVB (105) 1.12709E+03	=	OPVB (106) 4.55643E+08
107	PP (114) 2.70494E+03	PTH	OPVB (99) 0.00000E+00	=	OPVB (107) 7.56983E+02
108	OPVB (107) 7.56983E+02	SUB	HH (114) 5.53172E+02	=	OPVB (108) 2.03811E+02
109	OPVB (20) 1.82474E+04	MUL	OPVB (108) 2.03811E+02	=	OPVB (109) 3.71902E+06
110	OPVB (102) 6.11107E+09	ADD	OPVB (104) 1.22075E+09	=	OPVB (110) 7.33182E+09
111	OPVB (106) 4.55643E+08	ADD	OPVB (109) 3.71902E+06	=	OPVB (111) 4.59362E+08
112	OPVB (110) 7.33182E+09	ADD	OPVB (111) 4.59362E+08	=	OPVB (112) 7.79118E+09
113	BKNET (0) 9.93316E+02	MUL	OPVB (10) 1.00000E+03	=	OPVB (113) 9.93316E+05
114	OPVB (112) 7.79118E+09	DIV	OPVB (113) 9.93316E+05	=	OPVB (114) 7.84361E+03

IP70191 29

OPERATION SET VALUES CALCULATED
AT THE START OF ITERATION 19

OPER-ATION ID	VARIABLE (ID) VALUE	OPERATION	VARIABLE (ID) VALUE	=	VARIABLE (ID) VALUE
150	VV (22) 1.61845E-02	MUL	OPVB (150) 1.24680E-01	=	OPVB (151) 2.01789E-03
151	OPVB (151) 2.01789E-03	MUL	WW (22) 5.46464E+06	=	OPVB (152) 1.10270E+04
155	VV (207) 1.80191E-02	MUL	OPVB (150) 1.24680E-01	=	OPVB (156) 2.24663E-03
156	OPVB (156) 2.24663E-03	MUL	WW (207) 7.10251E+06	=	OPVB (157) 1.59567E+04
160	PP (4) 6.41311E+02	PSH	SS (59) 1.53267E+00	=	OPVB (165) 1.29708E+03
161	HH (59) 1.46121E+03	SUB	OPVB (165) 1.29708E+03	=	OPVB (166) 1.64127E+02
162	HH (59) 1.46121E+03	SUB	HH (66) 1.31089E+03	=	OPVB (167) 1.50319E+02
163	M * OPVB (167) 1.00E+00 * 1.50E+02 1.50319E+02	DIV	M * OPVB (166) 1.00E+00 * 1.64E+02 1.64127E+02	=	M * OPVB (168) 1.00E+02 * 9.16E-01 9.15872E+01
170	PP (1) 1.71097E+03	DIV	PP (4) 6.41311E+02	=	OPVB (170) 2.66792E+00
171	PP (67) 5.98344E+02	DIV	PP (777) 1.42181E+02	=	OPVB (171) 4.20834E+00
172	PP (66) 6.41311E+02	SUB	PP (-15) 5.98344E+02	=	OPVB (172) 4.29679E+01

IP70191130

OPERATION SET VALUES CALCULATED
AT THE START OF ITERATION 19

OPER-ATION ID	VARIABLE (ID) VALUE	OPERATION	VARIABLE (ID) VALUE	=	VARIABLE (ID) VALUE
173	M * OPVB (172) 1.00E+00 * 4.30E+01 4.29679E+01	DIV	M * PP (66) 1.00E+00 * 6.41E+02 6.41311E+02	=	M * OPVB (173) 1.00E+02 * 6.70E-02 6.70000E+00
180	HH (-67) 1.51804E+03	MUL	WW (67) 5.89476E+06	=	OPVB (180) 8.94850E+09
181	HH (180) 1.42311E+03	MUL	WW (180) 1.71589E+04	=	OPVB (181) 2.44191E+07
182	OPVB (180) 8.94850E+09	ADD	OPVB (181) 2.44191E+07	=	OPVB (182) 8.97291E+09
183	WW (67) 5.89476E+06	ADD	WW (180) 1.71589E+04	=	OPVB (183) 5.91192E+06
184	OPVB (182) 8.97291E+09	DIV	OPVB (183) 5.91192E+06	=	OPVB (184) 1.51777E+03
185	PP (-67) 5.98344E+02	PHS	OPVB (184) 1.51777E+03	=	OPVB (185) 1.71606E+00
186	PP (97) 1.42181E+02	PSH	OPVB (185) 1.71606E+00	=	OPVB (186) 1.32474E+03
187	OPVB (184) 1.51777E+03	SUB	OPVB (186) 1.32474E+03	=	OPVB (187) 1.93029E+02
189	OPVB (184) 1.51777E+03	SUB	HH (97) 1.33997E+03	=	OPVB (189) 1.77794E+02
190	M * OPVB (189) 1.00E+00 * 1.78E+02 1.77794E+02	DIV	M * OPVB (187) 1.00E+00 * 1.93E+02 1.93029E+02	=	M * OPVB (190) 1.00E+02 * 9.21E-01 9.21075E+01

IP7019131

OPERATION SET VALUES CALCULATED
AT THE START OF ITERATION 19

OPER-ATION ID	VARIABLE (ID) VALUE	OPERATION	VARIABLE (ID) VALUE	=	VARIABLE (ID) VALUE
193	PPGNHR(1) 6.30000E+01	SUB	PPGNH2(1) 6.30000E+01	=	OPVB (193) 0.00000E+00
194	OPVB (193) 0.00000E+00	MUL	OPVB (192) 1.73000E+01	=	OPVB (194) 0.00000E+00
196	OPVB (195) 1.02286E+04	SUB	OPVB (194) 0.00000E+00	=	BKELEI(1) 1.02286E+04
199	OPVB (198) 6.30000E+01	EQL		=	PPGNH2(1) 6.30000E+01

IP7019132

```
*** WARNING FROM VALTHV ROUTINE ***
    For throttle valve component with ID =  39, the
    calculated equivalent throttle flow ratio is
       1.03396.  This is not physically possible.  The
    equivalent throttle flow ratio is the load-point
    flow coefficient divided by the VWO flow
    coefficient.  This ratio cannot be larger than 1.
    You are advised to review your model to determine
    the cause of this result and to fix it.

    You have the option to suppress the printing of
    this warning message by use of suppression
    index = 111.
*** END OF WARNING ***
```

IP70191 33

TABLE OF NON-ZERO OPERATIONAL VARIABLES
(PRESENTATION IS: ID, VALUE; ID, ...)

1, 1.43359E+02;	2, 1.36493E+02;	3, 1.13328E+03;	4, 6.86527E+00
5, 9.96790E+02;	6, 6.88738E-03;	7, 1.00000E+00;	10, 1.00000E+03
14, 7.71700E+03;	20, 1.82474E+04;	21, 2.55772E-03;	32, 1.00000E+02
41, 7.81904E+01;	50, 5.66654E-02;	63, 9.00000E-01;	68, 6.41996E+02
69, 1.31543E+03;	70, 8.09822E+09;	71, 3.47239E+07;	72, 8.06350E+09
73, 1.31484E+03;	76, 6.41631E+08;	77, 2.59914E+07;	78, 6.15640E+08
79, 1.34760E+03;	100, 6.73000E+06;	101, 9.08035E+02;	102, 6.11107E+09
103, 2.07180E+02;	104, 1.22075E+09;	105, 1.12709E+03;	106, 4.55643E+08
107, 7.56983E+02;	108, 2.03811E+02;	109, 3.71902E+06;	110, 7.33182E+09
111, 4.59362E+08;	112, 7.79118E+09;	113, 9.93316E+05;	114, 7.84361E+03
150, 1.24680E-01;	151, 2.01789E-03;	152, 1.10270E+04;	156, 2.24663E-03
157, 1.59567E+04;	165, 1.29708E+03;	166, 1.64127E+02;	167, 1.50319E+02
168, 9.15872E+01;	170, 2.66792E+00;	171, 4.20834E+00;	172, 4.29679E+01
173, 6.70000E+00;	180, 8.94850E+09;	181, 2.44191E+07;	182, 8.97291E+09
183, 5.91192E+06;	184, 1.51777E+03;	185, 1.71606E+00;	186, 1.32474E+03
187, 1.93029E+02;	189, 1.77794E+02;	190, 9.21075E+01;	192, 1.73000E+01
195, 1.02286E+04;	198, 6.30000E+01;	200, 2.22308E+03	

IP7019134

SUMMARY OF ACTIVE SPECIAL OPTIONS

```
*** SPECIAL OPTION  1 IS ACTIVE
    IT SETS INPUT COMPONENT FLOW ACCORDING TO FLOW COEFFICIENT

       PRODUCING KEY RESULTS:

          STATUS                 =  CONVERGED
          INPUT COMPONENT FLOW   =  7.13426E+06 LBM/HR
          THROTTLE INLET FLOW    =  7.13426E+06 LBM/HR
          FLOW COEFFICIENT       =  8.21736E+04

       BASED ON KEY INPUTS:

          REF PRESSURE           =  2.28584E+03 PSIA
              ENTHALPY           =  1.46624E+03 BTU/LBM
              FLOW               =  6.73256E+06 LBM/HR

          CURRENT PRESSURE       =  2.41220E+03 PSIA
                  ENTHALPY       =  1.46121E+03 BTU/LBM


*** SPECIAL OPTION  6 IS ACTIVE
    IT ANALYZES TEST DATA, AUTOMATICALLY STANDARDIZES
    SYSTEM PERFORMANCE, AND CALCULATES THE PERFORMANCE
    IMPACT OF COMPONENT UPGRADES

       PRODUCING KEY RESULTS:

          SEE OPTION 6 SPECIFIC TABLES THROUGHOUT THE
          SEVERAL CASES
          SPECIFIC RESULTS OF INTEREST, WITH TITLES:
            PERFORMANCE TEST ANALYSIS RESULTS - ALL CASES
               AT AND AFTER STANDARDIZATION
            COMPARISON OF STANDARDIZED RESULTS
               AT STANDARDIZATION STEP
            GENERATION, HEAT RATE, AND COST - FINAL CASE

       BASED ON KEY INPUTS:

          PRIMARILY TEST DATA - TEMPERATURES, PRESSURES,
          AND FLOWS ENTERED IN THE TEST REDUCTION STEP
```

IP7019135

FLAG SETTINGS AND DATA FOR SYSTEM

```
NTGCYC =   2, FOSSIL TURBINE GENERATOR CYCLE CALCULATION

NTIMES =  19, NUMBER OF SYSTEM ITERATIONS
              (ITRMAX = 100, ITRMIN =   5)

NCMP   = 161, NUMBER OF COMPONENTS USED IN THIS CASE
              (MXCMP = 500, MAXIMUM NUMBER ALLOWED)

NSTR   = 244, NUMBER OF STREAMS USED IN THIS CASE
              (MXSTR = 600, MAXIMUM NUMBER ALLOWED)

NRHEAT =   1, REHEAT TURBINE PLANT DESIGN

CONVERGENCE DATA:

       EXTERR =  1.00000E+01 LBM/HR, EXTRACTION FLOW CONVERGENCE
       CIRERR =  1.00000E+00 LBM/HR, TOTAL SYSTEM MASS FLOW CONVERGENCE
       TERROR =  5.00000E-06 - ,     COMPONENT CONVERGENCE
       PERROR =  1.00000E-03 - ,     STREAM CONVERGENCE
       GENERR =  5.00000E+01 KW,     GENERATOR CONVERGENCE
       ENEROR =  1.00000E+04 BTU/HR, ENERGY CONVERGENCE

REFERENCE DATA:

       TTDEAD =    50.00 DEG F, DEAD STATE TEMPERATURE
       PPDEAD =    14.70 PSIA,  DEAD STATE PRESSURE
       ZZDEAD =     0.00 FT,    DEAD STATE ELEVATION
       TTAIR  =    50.00 DEG F, AMBIENT TEMPERATURE

STEAM TURBINE DATA:

       NTURB  = 1,        GENERAL ELECTRIC TURBINES
       NGEPRO = 3,        TURBINES SOLVED, G.E. FOSSIL PROCEDURE GER-2007C
       TFREQ  = 1.033955, EQUIVALENT THROTTLE FLOW RATIO
       TFR1ST = 1.000000, FIRST ADMISSION THROTTLE FLOW RATIO

GENERATOR NO. 1 DATA

       NGNTYP =  2,           CONDUCTOR COOLED GENERATOR
       NGENER =  1,           GENERAL ELECTRIC GENERATOR
       NGNCOL =  0,           LOSSES ARE NOT RECOVERABLE THROUGH COOLERS
       ISPEED =  3600 RPM,    GENERATOR SPEED
       BKGRAT =  991000  KVA, RATED GENERATOR CAPACITY
       POWFAC =  0.900        GENERATOR POWER FACTOR
```

IP70191136

FLAG SETTINGS AND DATA FOR SYSTEM
(CONTINUED)

```
SPECIAL OPTION NUMBER  1 HAS BEEN FLAGGED IN THE INPUT
          (CALCULATIONS BEGIN AT ITRSPC =   5).
SPECIAL OPTION NUMBER  6 HAS BEEN FLAGGED IN THE INPUT
          (CALCULATIONS BEGIN AT ITRSPC =   5).
```

IP7019137

GEOMETRY CONFIGURATION OF MODEL

COMP NO.	COMP TYPE	COMPONENT DESCRIPTION	CONNECTING STREAM NOS. AND STREAM TYPE (NO. - TYPE) 1 IN	1 OUT	2 IN	2 OUT	3 IN	3 OUT
1	8	GENERAL TURBINE	118-0	1-0				
3	8	GENERAL TURBINE	120-0	3-0		684-0		
4	8	GENERAL TURBINE	3-0	4-0				
5	8	GENERAL TURBINE	67-2	5-0				
6	8	GENERAL TURBINE	68-0	7-0		411-0		
7	8	GENERAL TURBINE	7-0	777-0		28-0		
8	8	GENERAL TURBINE	127-2	8-0		404-2		
9	8	GENERAL TURBINE	8-0	9-0		405-2		
10	8	GENERAL TURBINE	9-0	10-0		406-2		
11	8	GENERAL TURBINE	307-0	11-0		12-0		
12	8	GENERAL TURBINE	79-0	16-0				
13	8	GENERAL TURBINE	77-0	13-0				
14	8	GENERAL TURBINE	11-0	14-0				
15	25	FOSSIL REHEATER	613-0	15-0				
16	10	STD. CONDENSER	16-0	18-0	108-2	23-2	781-0	
17	10	STD. CONDENSER	13-0	20-0	129-2	17-0		
18	10	STD. CONDENSER	14-0	22-0	23-2	62-0	132-0	
19	14	STD. FW. HEATER	154-0	19-0	80-2	21-0		
20	16	FWHT. BACK-DRAIN	138-0	24-0	406-2	50-2	149-0	
21	16	FWHT. BACK-DRAIN	139-0	25-0	405-2	51-0	219-0	
22	16	FWHT. BACK-DRAIN	140-0	26-2	404-2	52-0		
23	15	CONTACT HEATER	75-0	27-0	142-2		100-0	
24	18	FW. W/DESUP+COOL	158-0	34-2	166-2	37-0	161-0	
25	18	FW. W/DESUP+COOL	172-0	38-2	224-2	45-0	179-0	
26	18	FW. W/DESUP+COOL	34-2	32-2	167-2	36-0	162-0	
27	18	FW. W/DESUP+COOL	38-2	41-2	170-2	40-0	178-0	
28	18	FW. W/DESUP+COOL	32-2	33-0	168-2	35-0		
29	18	FW. W/DESUP+COOL	41-2	46-0	169-2	39-0		
30	20	GEN. HT. EXCH.	104-0	30-2	210-0	57-0		
31	23	EXT. DRAIN COOL.	133-0	31-0	303-0	49-0		
32	27	SPEC. HT. EXCH.	192-0	55-0				
33	27	SPEC. HT. EXCH.	194-0	56-0				
34	41	STD. ELE. PUMP	200-0	42-0				
35	41	STD. ELE. PUMP	196-0	43-0				
36	61	FIXED FLOW SPLIT	199-0	201-0		44-0		
37	40	STM. DRIVEN PUMP	202-0	420-0	152-2	63-0		
38	40	STM. DRIVEN PUMP	203-0	76-0	151-2	64-0		
39	35	THROTTLE VALVE	117-0	54-0				
40	54	TRIPLE MIXER	48-0	210-0	47-0		181-0	
42	41	STD. ELE. PUMP	135-0	58-0				
43	41	STD. ELE. PUMP	212-0	60-0				

IP7019138

GEOMETRY CONFIGURATION OF MODEL

COMP NO.	COMP TYPE	COMPONENT DESCRIPTION	CONNECTING STREAM NOS. AND STREAM TYPE (NO. - TYPE) 1 IN	1 OUT	2 IN	2 OUT	3 IN	3 OUT
47	8	GENERAL TURBINE	306-0	79-0		81-2		
59	33	INPUT COMPONENT		59-0				
60	31	INFINITE SOURCE		107-0				
61	63	FIXED P.C. SPLIT	107-0	108-2		129-2		
62	50	STANDARD MIXER	62-0	105-0	17-0			
63	30	INFINITE SINK	105-0					
64	32	OUTPUT COMPONENT	114-2					
65	61	FIXED FLOW SPLIT	146-2	69-0		70-0		
66	50	STANDARD MIXER	137-0	66-0	131-0			
67	50	STANDARD MIXER	15-0	67-2	156-0			
68	50	STANDARD MIXER	5-0	68-0	180-0			
69	50	STANDARD MIXER	60-0	213-0	58-0			
71	50	STANDARD MIXER	334-2	71-0	134-0			
72	50	STANDARD MIXER	24-0	72-0	144-0			
73	50	STANDARD MIXER	72-0	73-0	197-0			
74	50	STANDARD MIXER	25-0	74-0	147-0			
75	50	STANDARD MIXER	26-2	75-0	150-0			
80	51	FWHT-COND. MIXER	57-0	83-0	63-0			
81	51	FWHT-COND. MIXER	208-0	84-0	95-0			
82	51	FWHT-COND. MIXER	119-0	82-0	157-0			
83	51	FWHT-COND. MIXER	82-0	86-0	183-0			
84	51	FWHT-COND. MIXER	86-0	102-0	186-0			
85	51	FWHT-COND. MIXER	102-0	85-0	128-0			
87	51	FWHT-COND. MIXER	64-0	87-0	220-0			
88	51	FWHT-COND. MIXER	87-0	88-0	218-0			
89	51	FWHT-COND. MIXER	88-0	89-0	145-0			
90	51	FWHT-COND. MIXER	89-0	90-0	413-0			
93	51	FWHT-COND. MIXER	163-0	93-0	176-0			
94	54	TRIPLE MIXER	93-0	94-0	175-0		164-0	
95	54	TRIPLE MIXER	94-0	95-0	174-0		165-0	
96	51	FWHT-COND. MIXER	136-0	96-0	130-0			
97	51	FWHT-COND. MIXER	28-0	97-0	96-0			
98	51	FWHT-COND. MIXER	97-0	98-0	222-0			
99	51	FWHT-COND. MIXER	191-0	99-0	223-0			
100	51	FWHT-COND. MIXER	109-0	100-0	99-0			
101	50	STANDARD MIXER	43-0	101-0	42-0			
106	50	STANDARD MIXER	420-0	106-0	76-0			
109	51	FWHT-COND. MIXER	110-0	109-0	204-0			
110	51	FWHT-COND. MIXER	111-0	110-0	205-0			
111	51	FWHT-COND. MIXER	160-0	111-0	173-0			
114	50	STANDARD MIXER	33-0	114-2	115-0			

IP70191139

GEOMETRY CONFIGURATION OF MODEL

COMP NO.	COMP TYPE	COMPONENT DESCRIPTION	CONNECTING STREAM NOS. AND STREAM TYPE (NO. - TYPE) 1 IN	1 OUT	2 IN	2 OUT	3 IN	3 OUT
117	60	DEMAND SPLITTER	116-0	117-0		222-0		
118	68	VALVE STEM LEAK	54-0	118-0		125-0		
119	68	VALVE STEM LEAK	125-0	122-0		157-0		
120	64	SHAFT LEAKAGE	1-0	120-0		180-0		
121	64	SHAFT LEAKAGE	4-0	121-0		123-0		
122	64	SHAFT LEAKAGE	122-0	131-0		156-0		
123	64	SHAFT LEAKAGE	123-0	130-0		183-0		
124	64	SHAFT LEAKAGE	121-0	124-0		184-0		
125	64	SHAFT LEAKAGE	184-0	136-0		186-0		
126	60	DEMAND SPLITTER	66-0	126-0		171-0		
127	64	SHAFT LEAKAGE	777-0	127-2		148-0		
128	64	SHAFT LEAKAGE	124-0	137-0		47-0		
129	61	FIXED FLOW SPLIT	148-0	128-0		181-0		
131	63	FIXED P.C. SPLIT	22-0	135-0		212-0		
132	51	FWHT-COND. MIXER	215-0	132-0	227-0			
133	63	FIXED P.C. SPLIT	30-2	133-0		134-0		
134	63	FIXED P.C. SPLIT	71-0	138-0		144-0		
135	63	FIXED P.C. SPLIT	73-0	139-0		147-0		
136	63	FIXED P.C. SPLIT	74-0	140-0		150-0		
137	63	FIXED P.C. SPLIT	52-0	219-0		220-0		
138	63	FIXED P.C. SPLIT	51-0	149-0		218-0		
139	63	FIXED P.C. SPLIT	50-2	146-2		145-0		
140	51	FWHT-COND. MIXER	18-0	215-0	20-0			
141	67	STM. SEAL REG.	182-0	141-0		211-0		
142	60	DEMAND SPLITTER	143-0	142-2		151-2		
143	60	DEMAND SPLITTER	98-0	143-0		152-2		
144	61	FIXED FLOW SPLIT	27-0	193-0		192-0		
145	61	FIXED FLOW SPLIT	193-0	207-0		194-0		
146	63	FIXED P.C. SPLIT	55-0	187-0		191-0		
147	63	FIXED P.C. SPLIT	418-0	197-0		223-0		
148	63	FIXED P.C. SPLIT	207-0	196-0		200-0		
150	63	FIXED P.C. SPLIT	101-0	600-0		204-0		
151	63	FIXED P.C. SPLIT	31-0	154-0		155-0		153-0
153	63	FIXED P.C. SPLIT	201-0	202-0		203-0		
155	63	FIXED P.C. SPLIT	106-0	608-0		205-0		
158	63	FIXED P.C. SPLIT	159-2	172-0		158-0		
159	63	FIXED P.C. SPLIT	612-2	159-2		177-0		
160	63	FIXED P.C. SPLIT	37-0	160-0		165-0		
161	63	FIXED P.C. SPLIT	36-0	161-0		164-0		
162	63	FIXED P.C. SPLIT	35-0	162-0		163-0		
163	63	FIXED P.C. SPLIT	45-0	173-0		174-0		

IP7019140

GEOMETRY CONFIGURATION OF MODEL

COMP NO.	COMP TYPE	COMPONENT DESCRIPTION	CONNECTING STREAM NOS. AND STREAM TYPE (NO. - TYPE) 1 IN	1 OUT	2 IN	2 OUT	3 IN	3 OUT
166	60	DEMAND SPLITTER	403-0	166-2		224-2		
167	60	DEMAND SPLITTER	402-0	167-2		170-2		
168	60	DEMAND SPLITTER	401-0	168-2		169-2		
173	61	FIXED FLOW SPLIT	85-0	182-0		48-0		
174	51	FWHT-COND. MIXER	83-0	208-0	141-0			
175	51	FWHT-COND. MIXER	417-0	227-0	214-0			
176	31	INFINITE SOURCE		214-0				
219	14	STD. FW. HEATER	155-0	225-0	450-2	226-0		
301	51	FWHT-COND. MIXER	69-0	301-0	226-0			
302	51	FWHT-COND. MIXER	301-0	302-0	21-0			
303	51	FWHT-COND. MIXER	302-0	303-0	321-0			
305	63	FIXED P.C. SPLIT	10-0	305-0		306-0		307-0
319	14	STD. FW. HEATER	153-0	319-0	999-2	321-0		
334	54	TRIPLE MIXER	19-0	334-2	225-0		319-0	
400	30	INFINITE SINK	609-0					
401	61	FIXED FLOW SPLIT	684-0	401-0		407-0		
402	61	FIXED FLOW SPLIT	171-0	402-0		408-0		
403	61	FIXED FLOW SPLIT	411-0	403-0		409-0		
404	51	FWHT-COND. MIXER	84-0	414-0	407-0			
405	51	FWHT-COND. MIXER	414-0	419-0	408-0			
406	51	FWHT-COND. MIXER	419-0	417-0	409-0			
413	61	FIXED FLOW SPLIT	187-0	413-0		421-0		
415	61	FIXED FLOW SPLIT	56-0	418-0		416-0		
416	30	INFINITE SINK	416-0					
417	30	INFINITE SINK	421-0					
450	51	FWHT-COND. MIXER	12-0	450-2	211-0			
600	50	STANDARD MIXER	600-0	199-0	61-0			
608	61	FIXED FLOW SPLIT	608-0	611-0		609-0		
609	61	FIXED FLOW SPLIT	611-0	612-2		610-0		
610	51	FWHT-COND. MIXER	126-0	613-0	610-0			
781	54	TRIPLE MIXER	90-0	781-0	49-0		44-0	
999	51	FWHT-COND. MIXER	81-2	999-2	70-0			

IP7019141

COMPONENT PROPERTIES

COMP	STREAM /PORT	FLU ID	MASS FLOW (LBM/HR)	TEMP (F)	PRESS (PSIA)	QUALITY (R HUM) (-)	ENTH (B/LB)	ENTRPY (B/LB-F)	SPEC. VOLUME (FT3/LBM)
1 TGEN	118/I	0	7104351.	996.7	2345.97	1.896	1461.2	1.53540	3.29E-01
	1/U	0	7104351.	903.9	1710.97	1.513	1423.1	1.53943	4.25E-01
3 TGEN	120/I	0	7087192.	903.9	1710.97	1.513	1423.1	1.53943	4.25E-01
	3/U	0	6512376.	783.1	1112.73	1.293	1372.6	1.54327	6.00E-01
	684/E	0	574816.	782.6	1107.17	1.292	1372.6	1.54376	6.03E-01
4 TGEN	3/I	0	6512376.	783.1	1112.73	1.293	1372.6	1.54327	6.00E-01
	4/U	0	6512376.	637.4	641.31	1.148	1310.3	1.54485	9.24E-01
5 TGEN	67/I	0	5894758.	1000.0	598.34	1.428	1518.0	1.71625	1.41E+00
	5/U	0	5894758.	915.7	435.79	1.352	1477.5	1.72170	1.83E+00
6 TGEN	68/I	0	5911917.	915.5	435.79	1.352	1477.4	1.72159	1.83E+00
	7/U	0	5643138.	786.5	270.53	1.260	1415.5	1.72569	2.68E+00
	411/E	0	268779.	800.8	267.50	1.269	1423.1	1.73296	2.75E+00
TIP LKG			32955.						
7 TGEN	7/I	0	5643138.	786.5	270.53	1.260	1415.5	1.72569	2.68E+00
	777/U	0	5172502.	629.2	142.18	1.170	1341.3	1.73149	4.47E+00
	28/E	0	470636.	629.2	142.18	1.170	1341.3	1.73149	4.47E+00
8 TGEN	127/I	0	5166089.	628.9	140.55	1.170	1341.3	1.73274	4.52E+00
	8/U	0	4996437.	496.1	71.55	1.109	1280.2	1.74596	7.83E+00
	404/E	0	169652.	520.2	70.65	1.122	1292.1	1.75972	8.14E+00
TIP LKG			33250.						
9 TGEN	8/I	0	4996437.	496.1	71.55	1.109	1280.2	1.74596	7.83E+00
	9/U	0	4639037.	419.5	46.61	1.078	1245.2	1.75434	1.11E+01
	405/E	0	357399.	429.4	45.97	1.083	1250.1	1.76139	1.14E+01
TIP LKG			50107.						
10 TGEN	9/I	0	4639037.	419.5	46.61	1.078	1245.2	1.75434	1.11E+01
	10/U	0	4458086.	223.7	14.06	1.007	1156.3	1.77028	2.86E+01
	406/E	0	180951.	246.0	13.86	1.018	1167.2	1.78754	3.00E+01
TIP LKG			22147.						
11 TGEN	307/I	0	1485880.	223.7	14.06	1.007	1156.3	1.77028	2.86E+01
	11/U	0	1422625.	171.3	6.18	0.974	1109.0	1.78637	5.88E+01
	12/E	0	63255.	170.7	6.10	0.974	1109.0	1.78764	5.95E+01

IP7019142

COMPONENT PROPERTIES

COMP	STREAM /PORT	FLU ID	MASS FLOW (LBM/HR)	TEMP (F)	PRESS (PSIA)	QUALITY (R HUM) (-)	ENTH (B/LB)	ENTRPY (B/LB-F)	SPEC. VOLUME (FT3/LBM)
12 TGEN	79/I	0	1417183.	170.3	6.05	0.974	1108.1	1.78727	5.99E+01
	16/U	0	1417183.	95.0	0.82	0.938	1039.0	1.88025	3.80E+02
13 TGEN	77/I	0	1412082.	169.0	5.87	0.972	1106.4	1.78772	6.16E+01
	13/U	0	1412082.	104.9	1.10	0.935	1040.0	1.85114	2.85E+02
14 TGEN	11/I	0	1422625.	171.3	6.18	0.974	1109.0	1.78637	5.88E+01
	14/U	0	1422625.	114.9	1.47	0.935	1044.5	1.82947	2.17E+02
15 HFRH	613/T	0	5892248.	638.3	641.31	1.149	1310.9	1.54538	9.26E-01
	15/T	0	5892248.	1000.0	598.34	1.428	1518.1	1.71626	1.41E+00
16 COND	16/S	0	1417183.	95.0	0.82	0.938	1039.0	1.88025	3.80E+02
	108/T	0	95771455.	81.0	50.00	-0.217	49.2	0.09520	1.61E-02
	781/D	0	1056300.	95.0	0.82	0.142	211.2	0.38771	5.75E+01
	18/D	0	2473483.	95.0	0.82	0.000	63.0	0.12059	1.61E-02
	23/T	0	95771455.	97.1	50.00	-0.200	65.3	0.12448	1.61E-02
17 COND	13/S	0	1412082.	104.9	1.10	0.935	1040.0	1.85114	2.85E+02
	129/T	0	47878545.	80.9	50.00	-0.217	49.1	0.09496	1.61E-02
	20/D	0	1412082.	104.9	1.10	0.000	72.9	0.13833	1.61E-02
	17/T	0	47878545.	109.5	50.00	-0.186	77.6	0.14634	1.62E-02
18 COND	14/S	0	1422625.	114.9	1.47	0.935	1044.5	1.82947	2.17E+02
	23/T	0	95771455.	95.4	50.00	-0.202	63.6	0.12136	1.61E-02
	132/D	0	4042015.	130.3	11.34	-0.070	98.3	0.18218	1.62E-02
	22/D	0	5464640.	114.9	1.47	0.000	82.9	0.15583	1.62E-02
	62/T	0	95771455.	110.4	50.00	-0.185	78.5	0.14789	1.62E-02
19 FWH	154/T	0	1805241.	124.8	236.13	-0.334	93.4	0.17279	1.62E-02
	80/S	0	74244.	166.9	5.59	0.973	1106.4	1.79287	6.45E+01
	19/T	0	1805241.	164.8	236.13	-0.285	133.4	0.23888	1.64E-02
	21/D	0	74244.	166.9	5.59	0.000	134.9	0.24247	1.64E-02
20 FWH	138/T	0	5414641.	165.3	185.44	-0.253	133.7	0.23960	1.64E-02
	406/S	0	180951.	245.7	13.32	1.019	1167.2	1.79183	3.12E+01
	149/D	0	527052.	234.3	44.71	-0.043	202.7	0.34506	1.69E-02
	24/T	0	5414641.	205.1	185.44	-0.206	173.7	0.30164	1.67E-02
	50/D	0	708002.	175.3	13.32	-0.032	143.4	0.25581	1.65E-02

IP7019143

COMPONENT PROPERTIES

COMP	STREAM /PORT	FLU ID	MASS FLOW (LBM/HR)	TEMP (F)	PRESS (PSIA)	QUALITY (R HUM) (-)	ENTH (B/LB)	ENTRPY (B/LB-F)	SPEC. VOLUME (FT3/LBM)
21 FWH	139/T	0	5414641.	205.1	185.44	-0.206	173.7	0.30164	1.67E-02
	405/S	0	357399.	429.0	44.71	1.084	1250.1	1.76441	1.17E+01
	219/D	0	169652.	284.4	70.21	-0.021	253.8	0.41601	1.73E-02
	25/T	0	5414641.	275.0	185.44	-0.123	244.4	0.40283	1.72E-02
	51/D	0	527052.	234.3	44.71	-0.043	202.7	0.34506	1.69E-02
22 FWH	140/T	0	5414641.	275.1	185.44	-0.123	244.4	0.40283	1.72E-02
	404/S	0	169652.	520.1	70.21	1.122	1292.1	1.76041	8.19E+00
	26/T	0	5414641.	306.8	185.44	-0.084	276.9	0.44620	1.75E-02
	52/D	0	169652.	284.4	70.21	-0.021	253.8	0.41601	1.73E-02
23 D-A	75/FW	0	5414641.	306.9	135.61	-0.052	276.9	0.44641	1.75E-02
	142/S	0	233723.	626.2	139.35	1.168	1340.0	1.73246	4.55E+00
	100/D	0	1454146.	366.1	265.37	-0.052	338.9	0.52375	1.82E-02
	27/D	0	7102510.	352.7	139.35	0.000	324.6	0.50674	1.80E-02
24 FWH	158/T	0	3374121.	357.8	2788.88	-1.516	334.1	0.50762	1.78E-02
	166/S	0	132489.	800.6	265.37	1.269	1423.1	1.73382	2.77E+00
	161/D	0	595915.	417.0	634.12	-0.117	393.9	0.58685	1.88E-02
	34/T	0	3374121.	408.2	2773.24	-1.304	386.9	0.57030	1.85E-02
	37/D	0	728404.	364.0	265.37	-0.055	336.7	0.52102	1.81E-02
25 FWH	172/T	0	3374121.	357.8	2788.88	-1.516	334.1	0.50762	1.78E-02
	224/S	0	136290.	800.6	265.08	1.269	1423.1	1.73394	2.77E+00
	179/D	0	589451.	415.8	635.24	-0.119	392.6	0.58532	1.88E-02
	38/T	0	3374121.	408.1	2773.24	-1.304	386.8	0.57020	1.85E-02
	45/D	0	725741.	368.2	265.08	-0.049	341.2	0.52648	1.82E-02
26 FWH	34/T	0	3374121.	408.2	2762.73	-1.285	386.8	0.57031	1.85E-02
	167/S	0	309493.	637.4	634.12	1.148	1310.9	1.54651	9.36E-01
	162/D	0	286422.	499.9	1096.46	-0.109	487.6	0.68706	2.03E-02
	32/T	0	3374121.	492.5	2747.08	-0.951	478.9	0.67152	1.99E-02
	36/D	0	595915.	417.0	634.12	-0.117	393.9	0.58685	1.88E-02
27 FWH	38/T	0	3374121.	408.1	2762.73	-1.286	386.7	0.57021	1.85E-02
	170/S	0	301057.	637.5	635.24	1.148	1310.9	1.54633	9.34E-01
	178/D	0	288395.	499.4	1097.11	-0.111	487.0	0.68637	2.03E-02
	41/T	0	3374121.	490.6	2747.08	-0.958	476.7	0.66926	1.98E-02
	40/D	0	589451.	415.8	635.24	-0.119	392.6	0.58532	1.88E-02

IP7019144

COMPONENT PROPERTIES

COMP	STREAM /PORT	FLU ID	MASS FLOW (LBM/HR)	TEMP (F)	PRESS (PSIA)	QUALITY (R HUM) (-)	ENTH (B/LB)	ENTRPY (B/LB-F)	SPEC. VOLUME (FT3/LBM)
28 FWH	32/T	0	3374121.	492.4	2741.28	-0.943	478.9	0.67152	1.99E-02
	168/S	0	286422.	781.7	1096.46	1.291	1372.6	1.54473	6.09E-01
	33/T	0	3374121.	556.1	2725.56	-0.676	554.0	0.74794	2.14E-02
	35/D	0	286422.	499.9	1096.46	-0.109	487.6	0.68706	2.03E-02
29 FWH	41/T	0	3374121.	490.5	2741.27	-0.950	476.7	0.66926	1.98E-02
	169/S	0	288394.	781.8	1097.11	1.291	1372.6	1.54467	6.08E-01
	46/T	0	3374121.	554.9	2725.55	-0.681	552.4	0.74638	2.13E-02
	39/D	0	288395.	499.4	1097.11	-0.111	487.0	0.68637	2.03E-02
30 HXGN	104/T	0	5414641.	115.1	434.82	-0.452	84.2	0.15585	1.62E-02
	210/S	0	7739.	632.2	299.92	1.159	1332.3	1.64341	2.08E+00
	30/T	0	5414641.	116.7	434.82	-0.450	85.9	0.15873	1.62E-02
	57/D	0	7739.	203.9	12.50	0.000	172.0	0.29996	1.67E-02
31 HXDC	133/T	0	5414641.	117.3	236.13	-0.343	85.9	0.15977	1.62E-02
	303/S	0	924776.	168.4	5.78	0.000	136.4	0.24479	1.64E-02
	31/T	0	5414641.	124.8	236.13	-0.334	93.4	0.17279	1.62E-02
	49/D	0	924776.	124.1	5.78	-0.044	92.1	0.17166	1.62E-02
32 HXSP	192/T	0	0.	352.7	139.35	0.000	324.6	0.50674	1.80E-02
	55/T	0	0.	352.7	139.35	0.000	324.6	0.50674	1.80E-02
33 HXSP	194/T	0	0.	352.7	139.35	0.000	324.6	0.50674	1.80E-02
	56/T	0	0.	352.7	139.35	0.000	324.6	0.50674	1.80E-02
34 PMEL	200/I	0	3551255.	352.7	139.35	0.000	324.6	0.50674	1.80E-02
	42/U	0	3551255.	353.1	301.65	-0.085	325.3	0.50698	1.80E-02
35 PMEL	196/I	0	3551255.	352.7	139.35	0.000	324.6	0.50674	1.80E-02
	43/U	0	3551255.	353.1	301.65	-0.085	325.3	0.50698	1.80E-02
36 SFIX	199/I	0	7152508.	351.5	301.65	-0.087	323.6	0.50491	1.80E-02
	201/U	0	7152508.	351.5	301.65	-0.087	323.6	0.50491	1.80E-02
	44/B	0	0.	351.5	301.65	-0.087	323.6	0.50491	1.80E-02
37 PMST	202/IP	0	3576254.	351.5	301.65	-0.087	323.6	0.50491	1.80E-02
	152/IT	0	126271.	626.4	140.74	1.168	1340.0	1.73138	4.51E+00
	420/UP	0	3576254.	357.8	2833.25	-1.614	334.1	0.50748	1.78E-02
	63/UT	0	126271.	114.9	1.47	0.927	1036.8	1.81599	2.15E+02

IP7019145

COMPONENT PROPERTIES

COMP	STREAM /PORT	FLU ID	MASS FLOW (LBM/HR)	TEMP (F)	PRESS (PSIA)	QUALITY (R HUM) (-)	ENTH (B/LB)	ENTRPY (B/LB-F)	SPEC. VOLUME (FT3/LBM)
38 PMST	203/IP	0	3576254.	351.5	301.65	-0.087	323.6	0.50491	1.80E-02
	151/IT	0	131524.	626.4	140.74	1.168	1340.0	1.73138	4.51E+00
	76/UP	0	3576254.	357.8	2835.36	-1.619	334.1	0.50748	1.78E-02
	64/UT	0	131524.	95.0	0.82	0.948	1048.6	1.89770	3.83E+02
39 VTHR	117/I	0	7134261.	1000.0	2412.20	1.947	1461.2	1.53267	3.20E-01
	54/U	0	7134261.	996.7	2345.97	1.896	1461.2	1.53540	3.29E-01
40 M3WA	48/IA	0	5200.	644.8	352.66	1.165	1335.6	1.62929	1.78E+00
	47/IB	0	1277.	637.4	641.31	1.148	1310.3	1.54485	9.24E-01
	181/IC	0	1262.	629.2	142.18	1.170	1341.3	1.73149	4.47E+00
	210/U	0	7739.	632.2	299.92	1.159	1332.3	1.64341	2.08E+00
42 PMEL	135/I	0	2732320.	114.9	1.47	0.000	82.9	0.15583	1.62E-02
	58/U	0	2732320.	115.1	434.82	-0.452	84.2	0.15585	1.62E-02
43 PMEL	212/I	0	2732320.	114.9	1.47	0.000	82.9	0.15583	1.62E-02
	60/U	0	2732320.	115.1	434.82	-0.452	84.2	0.15585	1.62E-02
44 SFIX	213/I	0	5464640.	115.1	434.82	-0.452	84.2	0.15585	1.62E-02
	104/U	0	5414641.	115.1	434.82	-0.452	84.2	0.15585	1.62E-02
	61/B	0	49998.	115.1	434.82	-0.452	84.2	0.15585	1.62E-02
46 TGEN	305/I	0	1486326.	223.7	14.06	1.007	1156.3	1.77028	2.86E+01
	77/U	0	1412082.	169.0	5.87	0.972	1106.4	1.78772	6.16E+01
	80/E	0	74244.	168.5	5.80	0.973	1106.4	1.78900	6.23E+01
47 TGEN	306/I	0	1485880.	223.7	14.06	1.007	1156.3	1.77028	2.86E+01
	79/U	0	1417183.	170.3	6.05	0.974	1108.1	1.78727	5.99E+01
	81/E	0	68698.	169.8	5.97	0.974	1108.1	1.78855	6.06E+01
59 IPUT	59/U	0	7134261.	1000.0	2412.20	1.947	1461.2	1.53267	3.20E-01
60 SRCE	107/U	0	143650000.	72.3	50.00	-0.226	40.5	0.07899	1.61E-02
61 SPCT	107/I	0	143650000.	72.3	50.00	-0.226	40.5	0.07899	1.61E-02
	108/U	0	95771455.	72.3	50.00	-0.226	40.5	0.07899	1.61E-02
	129/B	0	47878545.	72.3	50.00	-0.226	40.5	0.07899	1.61E-02
62 MIXR	62/IA	0	95771455.	110.4	50.00	-0.185	78.5	0.14789	1.62E-02
	17/IB	0	47878545.	109.5	50.00	-0.186	77.6	0.14634	1.62E-02

IP7019146

COMPONENT PROPERTIES

COMP	STREAM /PORT	FLU ID	MASS FLOW (LBM/HR)	TEMP (F)	PRESS (PSIA)	QUALITY (R HUM) (-)	ENTH (B/LB)	ENTRPY (B/LB-F)	SPEC. VOLUME (FT3/LBM)
63 SINK	105/I	0	143650000.	110.1	50.00	-0.186	78.2	0.14738	1.62E-02
64 OPUT	114/I	0	6748242.	555.4	2704.94	-0.657	553.2	0.74721	2.14E-02
65 SFIX	146/I	0	708002.	168.5	5.80	0.006	143.4	0.25590	4.57E-01
	69/U	0	703126.	168.5	5.80	0.000	136.5	0.24497	1.66E-02
	70/B	0	4876.	168.5	5.80	1.000	1133.3	1.83178	6.40E+01
66 MIXR	137/IA	0	6477685.	637.4	641.31	1.148	1310.3	1.54485	9.24E-01
	131/IB	0	25113.	996.7	2345.97	1.896	1461.2	1.53540	3.29E-01
	66/U	0	6502798.	638.3	641.31	1.149	1310.9	1.54538	9.26E-01
67 MIXR	15/IA	0	5892248.	1000.0	598.34	1.428	1518.1	1.71626	1.41E+00
	156/IB	0	2511.	996.7	2345.97	1.896	1461.2	1.53540	3.29E-01
	67/U	0	5894758.	1000.0	598.34	1.428	1518.0	1.71625	1.41E+00
68 MIXR	5/IA	0	5894758.	915.7	435.79	1.352	1477.5	1.72170	1.83E+00
	180/IB	0	17159.	903.9	1710.97	1.513	1423.1	1.53943	4.25E-01
	68/U	0	5911917.	915.5	435.79	1.352	1477.4	1.72159	1.83E+00
69 MIXR	60/IA	0	2732320.	115.1	434.82	-0.452	84.2	0.15585	1.62E-02
	58/IB	0	2732320.	115.1	434.82	-0.452	84.2	0.15585	1.62E-02
	213/U	0	5464640.	115.1	434.82	-0.452	84.2	0.15585	1.62E-02
71 MIXR	334/IA	0	5414641.	165.3	185.44	-0.253	133.7	0.23960	1.64E-02
	134/IB	0	0.	117.3	236.13	-0.343	85.9	0.15977	1.62E-02
	71/U	0	5414641.	165.3	185.44	-0.253	133.7	0.23960	1.64E-02
72 MIXR	24/IA	0	5414641.	205.1	185.44	-0.206	173.7	0.30164	1.67E-02
	144/IB	0	0.	165.3	185.44	-0.253	133.7	0.23960	1.64E-02
	72/U	0	5414641.	205.1	185.44	-0.206	173.7	0.30164	1.67E-02
73 MIXR	72/IA	0	5414641.	205.1	185.44	-0.206	173.7	0.30164	1.67E-02
	197/IB	0	0.	352.7	139.35	0.000	324.6	0.50674	1.80E-02
	73/U	0	5414641.	205.1	185.44	-0.206	173.7	0.30164	1.67E-02
74 MIXR	25/IA	0	5414641.	275.0	185.44	-0.123	244.4	0.40283	1.72E-02
	147/IB	0	0.	205.1	185.44	-0.206	173.7	0.30164	1.67E-02
	74/U	0	5414641.	275.1	185.44	-0.123	244.4	0.40283	1.72E-02

IP7019147

COMPONENT PROPERTIES

COMP	STREAM /PORT	FLU ID	MASS FLOW (LBM/HR)	TEMP (F)	PRESS (PSIA)	QUALITY (R HUM) (-)	ENTH (B/LB)	ENTRPY (B/LB-F)	SPEC. VOLUME (FT3/LBM)
75 MIXR	26/IA	0	5414641.	306.9	135.61	-0.052	276.9	0.44641	1.75E-02
	150/IB	0	0.	275.1	185.44	-0.123	244.4	0.40283	1.72E-02
	75/U	0	5414641.	306.9	135.61	-0.052	276.9	0.44641	1.75E-02
80 MX51	57/IA	0	7739.	203.9	12.50	0.000	172.0	0.29996	1.67E-02
	63/IB	0	126271.	114.9	1.47	0.927	1036.8	1.81599	2.15E+02
	83/U	0	134010.	203.9	12.50	0.835	986.8	1.52787	2.61E+01
81 MX51	208/IA	0	138202.	199.9	11.51	0.848	997.4	1.55138	2.86E+01
	95/IB	0	0.	392.7	439.72	-0.087	367.5	0.55706	1.85E-02
	84/U	0	138202.	199.9	11.51	0.848	997.4	1.55138	2.86E+01
82 MX51	119/IA	0	0.	1000.0	2412.20	1.947	1461.2	1.53267	3.20E-01
	157/IB	0	2286.	996.7	2345.97	1.896	1461.2	1.53540	3.29E-01
	82/U	0	2286.	996.7	2345.97	1.896	1461.2	1.53540	3.29E-01
83 MX51	82/IA	0	2286.	996.7	2345.97	1.896	1461.2	1.53540	3.29E-01
	183/IB	0	8472.	637.4	641.31	1.148	1310.3	1.54485	9.24E-01
	86/U	0	10759.	705.4	790.75	1.206	1342.4	1.55223	7.99E-01
84 MX51	86/IA	0	10759.	705.4	790.75	1.206	1342.4	1.55223	7.99E-01
	186/IB	0	4060.	637.4	641.31	1.148	1310.3	1.54485	9.24E-01
	102/U	0	14818.	686.6	745.33	1.189	1333.6	1.55056	8.33E-01
85 MX51	102/IA	0	14818.	686.6	745.33	1.189	1333.6	1.55056	8.33E-01
	128/IB	0	5151.	629.2	142.18	1.170	1341.3	1.73149	4.47E+00
	85/U	0	19969.	644.8	352.66	1.165	1335.6	1.62929	1.78E+00
87 MX51	64/IA	0	131524.	95.0	0.82	0.948	1048.6	1.89770	3.83E+02
	220/IB	0	0.	284.4	70.21	-0.021	253.8	0.41601	1.73E-02
	87/U	0	131524.	95.0	0.82	0.948	1048.6	1.89770	3.83E+02
88 MX51	87/IA	0	131524.	95.0	0.82	0.948	1048.6	1.89770	3.83E+02
	218/IB	0	0.	234.3	44.71	-0.043	202.7	0.34506	1.69E-02
	88/U	0	131524.	95.0	0.82	0.948	1048.6	1.89770	3.83E+02
89 MX51	88/IA	0	131524.	95.0	0.82	0.948	1048.6	1.89770	3.83E+02
	145/IB	0	0.	175.3	10.46	-0.020	143.4	0.25582	1.65E-02
	89/U	0	131524.	95.0	0.82	0.948	1048.6	1.89770	3.83E+02

IP7019148

COMPONENT PROPERTIES

COMP	STREAM /PORT	FLU ID	MASS FLOW (LBM/HR)	TEMP (F)	PRESS (PSIA)	QUALITY (R HUM) (-)	ENTH (B/LB)	ENTRPY (B/LB-F)	SPEC. VOLUME (FT3/LBM)
90 MX51	89/IA	0	131524.	95.0	0.82	0.948	1048.6	1.89770	3.83E+02
	413/IB	0	0.	352.7	139.35	0.000	324.6	0.50674	1.80E-02
	90/U	0	131524.	95.0	0.82	0.948	1048.6	1.89770	3.83E+02
93 MX51	163/IA	0	0.	499.9	1096.46	-0.109	487.6	0.68706	2.03E-02
	176/IB	0	0.	499.4	1097.11	-0.111	487.0	0.68637	2.03E-02
	93/U	0	0.	499.6	1096.78	-0.110	487.3	0.68671	2.03E-02
94 M3WA	93/IA	0	0.	499.6	1096.78	-0.110	487.3	0.68671	2.03E-02
	175/IB	0	0.	415.8	635.24	-0.119	392.6	0.58532	1.88E-02
	164/IC	0	0.	417.0	634.12	-0.117	393.9	0.58685	1.88E-02
	94/U	0	0.	444.8	788.71	-0.120	424.6	0.62066	1.93E-02
95 M3WA	94/IA	0	0.	444.8	788.71	-0.120	424.6	0.62066	1.93E-02
	174/IB	0	0.	368.2	265.08	-0.049	341.2	0.52648	1.82E-02
	165/IC	0	0.	364.0	265.37	-0.055	336.7	0.52102	1.81E-02
	95/U	0	0.	392.7	439.72	-0.087	367.5	0.55706	1.85E-02
96 MX51	136/IA	0	5540.	637.4	641.31	1.148	1310.3	1.54485	9.24E-01
	130/IB	0	15342.	637.4	641.31	1.148	1310.3	1.54485	9.24E-01
	96/U	0	20882.	637.4	641.31	1.148	1310.3	1.54485	9.24E-01
97 MX51	28/IA	0	470636.	629.2	142.18	1.170	1341.3	1.73149	4.47E+00
	96/IB	0	20882.	637.4	641.31	1.148	1310.3	1.54485	9.24E-01
	97/U	0	491518.	626.6	142.18	1.168	1340.0	1.73028	4.46E+00
98 MX51	97/IA	0	491518.	626.6	142.18	1.168	1340.0	1.73028	4.46E+00
	222/IB	0	0.	1000.0	2412.20	1.947	1461.2	1.53267	3.20E-01
	98/U	0	491518.	626.6	142.18	1.168	1340.0	1.73028	4.46E+00
99 MX51	191/IA	0	0.	352.7	139.35	0.000	324.6	0.50674	1.80E-02
	223/IB	0	0.	352.7	139.35	0.000	324.6	0.50674	1.80E-02
	99/U	0	0.	352.7	139.35	0.000	324.6	0.50674	1.80E-02
100 MX51	109/IA	0	1454146.	366.1	265.37	-0.052	338.9	0.52375	1.82E-02
	99/IB	0	0.	352.7	139.35	0.000	324.6	0.50674	1.80E-02
	100/U	0	1454146.	366.1	265.37	-0.052	338.9	0.52375	1.82E-02
101 MIXR	43/IA	0	3551255.	353.1	301.65	-0.085	325.3	0.50698	1.80E-02
	42/IB	0	3551255.	353.1	301.65	-0.085	325.3	0.50698	1.80E-02
	101/U	0	7102510.	353.1	301.65	-0.085	325.3	0.50698	1.80E-02

IP7019149

COMPONENT PROPERTIES

COMP	STREAM /PORT	FLU ID	MASS FLOW (LBM/HR)	TEMP (F)	PRESS (PSIA)	QUALITY (R HUM) (-)	ENTH (B/LB)	ENTRPY (B/LB-F)	SPEC. VOLUME (FT3/LBM)
106 MIXR	420/IA	0	3576254.	357.8	2833.25	-1.614	334.1	0.50748	1.78E-02
	76/IB	0	3576254.	357.8	2835.36	-1.619	334.1	0.50748	1.78E-02
	106/U	0	7152508.	357.8	2834.30	-1.616	334.1	0.50748	1.78E-02
109 MX51	110/IA	0	1454146.	366.1	265.37	-0.052	338.9	0.52375	1.82E-02
	204/IB	0	0.	353.1	301.65	-0.085	325.3	0.50698	1.80E-02
	109/U	0	1454146.	366.1	265.37	-0.052	338.9	0.52375	1.82E-02
110 MX51	111/IA	0	1454146.	366.1	265.37	-0.052	338.9	0.52375	1.82E-02
	205/IB	0	0.	357.8	2834.30	-1.616	334.1	0.50748	1.78E-02
	110/U	0	1454146.	366.1	265.37	-0.052	338.9	0.52375	1.82E-02
111 MX51	160/IA	0	728404.	364.0	265.37	-0.055	336.7	0.52102	1.81E-02
	173/IB	0	725741.	368.2	265.08	-0.049	341.2	0.52648	1.82E-02
	111/U	0	1454146.	366.1	265.37	-0.052	338.9	0.52375	1.82E-02
114 MIXR	33/IA	0	3374121.	556.1	2725.56	-0.676	554.0	0.74794	2.14E-02
	115/IB	0	3374121.	554.9	2725.55	-0.681	552.4	0.74638	2.13E-02
	114/U	0	6748242.	555.5	2725.56	-0.678	553.2	0.74716	2.14E-02
115 MIXR	46/IA	0	3374121.	554.9	2725.55	-0.681	552.4	0.74638	2.13E-02
	177/IB	0	0.	357.9	2800.15	-1.540	334.1	0.50762	1.78E-02
	115/U	0	3374121.	554.9	2725.55	-0.681	552.4	0.74638	2.13E-02
116 SDEM	59/I	0	7134261.	1000.0	2412.20	1.947	1461.2	1.53267	3.20E-01
	116/U	0	7134261.	1000.0	2412.20	1.947	1461.2	1.53267	3.20E-01
	119/B	0	0.	1000.0	2412.20	1.947	1461.2	1.53267	3.20E-01
117 SDEM	116/I	0	7134261.	1000.0	2412.20	1.947	1461.2	1.53267	3.20E-01
	117/U	0	7134261.	1000.0	2412.20	1.947	1461.2	1.53267	3.20E-01
	222/B	0	0.	1000.0	2412.20	1.947	1461.2	1.53267	3.20E-01
118 SVSL	54/I	0	7134261.	996.7	2345.97	1.896	1461.2	1.53540	3.29E-01
	118/U	0	7104351.	996.7	2345.97	1.896	1461.2	1.53540	3.29E-01
	125/B	0	29910.	996.7	2345.97	1.896	1461.2	1.53540	3.29E-01
119 SVSL	125/I	0	29910.	996.7	2345.97	1.896	1461.2	1.53540	3.29E-01
	122/U	0	27624.	996.7	2345.97	1.896	1461.2	1.53540	3.29E-01
	157/B	0	2286.	996.7	2345.97	1.896	1461.2	1.53540	3.29E-01

IP7019150

COMPONENT PROPERTIES

COMP	STREAM /PORT	FLU ID	MASS FLOW (LBM/HR)	TEMP (F)	PRESS (PSIA)	QUALITY (R HUM) (-)	ENTH (B/LB)	ENTRPY (B/LB-F)	SPEC. VOLUME (FT3/LBM)
120 SSPL	1/I	0	7104351.	903.9	1710.97	1.513	1423.1	1.53943	4.25E-01
	120/U	0	7087192.	903.9	1710.97	1.513	1423.1	1.53943	4.25E-01
	180/B	0	17159.	903.9	1710.97	1.513	1423.1	1.53943	4.25E-01
121 SSPL	4/I	0	6512376.	637.4	641.31	1.148	1310.3	1.54485	9.24E-01
	121/U	0	6488562.	637.4	641.31	1.148	1310.3	1.54485	9.24E-01
	123/B	0	23815.	637.4	641.31	1.148	1310.3	1.54485	9.24E-01
122 SSPL	122/I	0	27624.	996.7	2345.97	1.896	1461.2	1.53540	3.29E-01
	131/U	0	25113.	996.7	2345.97	1.896	1461.2	1.53540	3.29E-01
	156/B	0	2511.	996.7	2345.97	1.896	1461.2	1.53540	3.29E-01
123 SSPL	123/I	0	23815.	637.4	641.31	1.148	1310.3	1.54485	9.24E-01
	130/U	0	15342.	637.4	641.31	1.148	1310.3	1.54485	9.24E-01
	183/B	0	8472.	637.4	641.31	1.148	1310.3	1.54485	9.24E-01
124 SSPL	121/I	0	6488562.	637.4	641.31	1.148	1310.3	1.54485	9.24E-01
	124/U	0	6478962.	637.4	641.31	1.148	1310.3	1.54485	9.24E-01
	184/B	0	9599.	637.4	641.31	1.148	1310.3	1.54485	9.24E-01
125 SSPL	184/I	0	9599.	637.4	641.31	1.148	1310.3	1.54485	9.24E-01
	136/U	0	5540.	637.4	641.31	1.148	1310.3	1.54485	9.24E-01
	186/B	0	4060.	637.4	641.31	1.148	1310.3	1.54485	9.24E-01
126 SDEM	66/I	0	6502798.	638.3	641.31	1.149	1310.9	1.54538	9.26E-01
	126/U	0	5892248.	638.3	641.31	1.149	1310.9	1.54538	9.26E-01
	171/B	0	610550.	638.3	641.31	1.149	1310.9	1.54538	9.26E-01
127 SSPL	777/I	0	5172502.	629.2	142.18	1.170	1341.3	1.73149	4.47E+00
	127/U	0	5166089.	629.2	142.18	1.170	1341.3	1.73149	4.47E+00
	148/B	0	6413.	629.2	142.18	1.170	1341.3	1.73149	4.47E+00
128 SSPL	124/I	0	6478962.	637.4	641.31	1.148	1310.3	1.54485	9.24E-01
	137/U	0	6477685.	637.4	641.31	1.148	1310.3	1.54485	9.24E-01
	47/B	0	1277.	637.4	641.31	1.148	1310.3	1.54485	9.24E-01
129 SFIX	148/I	0	6413.	629.2	142.18	1.170	1341.3	1.73149	4.47E+00
	128/U	0	5151.	629.2	142.18	1.170	1341.3	1.73149	4.47E+00
	181/B	0	1262.	629.2	142.18	1.170	1341.3	1.73149	4.47E+00

IP7019151

COMPONENT PROPERTIES

COMP	STREAM /PORT	FLU ID	MASS FLOW (LBM/HR)	TEMP (F)	PRESS (PSIA)	QUALITY (R HUM) (-)	ENTH (B/LB)	ENTRPY (B/LB-F)	SPEC. VOLUME (FT3/LBM)
131 SPCT	22/I	0	5464640.	114.9	1.47	0.000	82.9	0.15583	1.62E-02
	135/U	0	2732320.	114.9	1.47	0.000	82.9	0.15583	1.62E-02
	212/B	0	2732320.	114.9	1.47	0.000	82.9	0.15583	1.62E-02
132 MX51	215/IA	0	3885565.	98.6	0.92	-0.000	66.6	0.12713	1.61E-02
	227/IB	0	156449.	199.9	11.51	0.732	884.4	1.37998	2.47E+01
	132/U	0	4042015.	130.3	11.34	-0.070	98.3	0.18218	1.62E-02
133 SPCT	30/I	0	5414641.	117.3	236.13	-0.343	85.9	0.15977	1.62E-02
	133/U	0	5414641.	117.3	236.13	-0.343	85.9	0.15977	1.62E-02
	134/B	0	0.	117.3	236.13	-0.343	85.9	0.15977	1.62E-02
134 SPCT	71/I	0	5414641.	165.3	185.44	-0.253	133.7	0.23960	1.64E-02
	138/U	0	5414641.	165.3	185.44	-0.253	133.7	0.23960	1.64E-02
	144/B	0	0.	165.3	185.44	-0.253	133.7	0.23960	1.64E-02
135 SPCT	73/I	0	5414641.	205.1	185.44	-0.206	173.7	0.30164	1.67E-02
	139/U	0	5414641.	205.1	185.44	-0.206	173.7	0.30164	1.67E-02
	147/B	0	0.	205.1	185.44	-0.206	173.7	0.30164	1.67E-02
136 SPCT	74/I	0	5414641.	275.1	185.44	-0.123	244.4	0.40283	1.72E-02
	140/U	0	5414641.	275.1	185.44	-0.123	244.4	0.40283	1.72E-02
	150/B	0	0.	275.1	185.44	-0.123	244.4	0.40283	1.72E-02
137 SPCT	52/I	0	169652.	284.4	70.21	-0.021	253.8	0.41601	1.73E-02
	219/U	0	169652.	284.4	70.21	-0.021	253.8	0.41601	1.73E-02
	220/B	0	0.	284.4	70.21	-0.021	253.8	0.41601	1.73E-02
138 SPCT	51/I	0	527052.	234.3	44.71	-0.043	202.7	0.34506	1.69E-02
	149/U	0	527052.	234.3	44.71	-0.043	202.7	0.34506	1.69E-02
	218/B	0	0.	234.3	44.71	-0.043	202.7	0.34506	1.69E-02
139 SPCT	50/I	0	708002.	175.3	10.46	-0.020	143.4	0.25582	1.65E-02
	146/U	0	708002.	175.3	10.46	-0.020	143.4	0.25582	1.65E-02
	145/B	0	0.	175.3	10.46	-0.020	143.4	0.25582	1.65E-02
140 MX51	18/IA	0	2473483.	95.0	0.82	0.000	63.0	0.12059	1.61E-02
	20/IB	0	1412082.	104.9	1.10	0.000	72.9	0.13833	1.61E-02
	215/U	0	3885565.	98.6	0.92	-0.000	66.6	0.12713	1.61E-02

IP7019152

COMPONENT PROPERTIES

COMP	STREAM /PORT	FLU ID	MASS FLOW (LBM/HR)	TEMP (F)	PRESS (PSIA)	QUALITY (R HUM) (-)	ENTH (B/LB)	ENTRPY (B/LB-F)	SPEC. VOLUME (FT3/LBM)
141 SSSR	182/I	0	14769.	644.8	352.66	1.165	1335.6	1.62929	1.78E+00
	141/U	0	4192.	599.3	5.00	1.204	1335.6	2.09302	1.26E+02
	211/B	0	10577.	599.3	5.00	1.204	1335.6	2.09302	1.26E+02
142 SDEM	143/I	0	365247.	626.6	142.18	1.168	1340.0	1.73028	4.46E+00
	142/U	0	233723.	626.6	142.18	1.168	1340.0	1.73028	4.46E+00
	151/B	0	131524.	626.6	142.18	1.168	1340.0	1.73028	4.46E+00
143 SDEM	98/I	0	491518.	626.6	142.18	1.168	1340.0	1.73028	4.46E+00
	143/U	0	365247.	626.6	142.18	1.168	1340.0	1.73028	4.46E+00
	152/B	0	126271.	626.6	142.18	1.168	1340.0	1.73028	4.46E+00
144 SFIX	27/I	0	7102510.	352.7	139.35	0.000	324.6	0.50674	1.80E-02
	193/U	0	7102510.	352.7	139.35	0.000	324.6	0.50674	1.80E-02
	192/B	0	0.	352.7	139.35	0.000	324.6	0.50674	1.80E-02
145 SFIX	193/I	0	7102510.	352.7	139.35	0.000	324.6	0.50674	1.80E-02
	207/U	0	7102510.	352.7	139.35	0.000	324.6	0.50674	1.80E-02
	194/B	0	0.	352.7	139.35	0.000	324.6	0.50674	1.80E-02
146 SPCT	55/I	0	0.	352.7	139.35	0.000	324.6	0.50674	1.80E-02
	187/U	0	0.	352.7	139.35	0.000	324.6	0.50674	1.80E-02
	191/B	0	0.	352.7	139.35	0.000	324.6	0.50674	1.80E-02
147 SPCT	418/I	0	0.	352.7	139.35	0.000	324.6	0.50674	1.80E-02
	197/U	0	0.	352.7	139.35	0.000	324.6	0.50674	1.80E-02
	223/B	0	0.	352.7	139.35	0.000	324.6	0.50674	1.80E-02
148 SPCT	207/I	0	7102510.	352.7	139.35	0.000	324.6	0.50674	1.80E-02
	196/U	0	3551255.	352.7	139.35	0.000	324.6	0.50674	1.80E-02
	200/B	0	3551255.	352.7	139.35	0.000	324.6	0.50674	1.80E-02
150 SPCT	101/I	0	7102510.	353.1	301.65	-0.085	325.3	0.50698	1.80E-02
	600/U	0	7102510.	353.1	301.65	-0.085	325.3	0.50698	1.80E-02
	204/B	0	0.	353.1	301.65	-0.085	325.3	0.50698	1.80E-02
151 SPCT	31/I	0	5414641.	124.8	236.13	-0.334	93.4	0.17279	1.62E-02
	154/U	0	1805241.	124.8	236.13	-0.334	93.4	0.17279	1.62E-02
	155/B	0	1804700.	124.8	236.13	-0.334	93.4	0.17279	1.62E-02
	153/C	0	1804700.	124.8	236.13	-0.334	93.4	0.17279	1.62E-02

IP7019153

COMPONENT PROPERTIES

COMP	STREAM /PORT	FLU ID	MASS FLOW (LBM/HR)	TEMP (F)	PRESS (PSIA)	QUALITY (R HUM) (-)	ENTH (B/LB)	ENTRPY (B/LB-F)	SPEC. VOLUME (FT3/LBM)
153 SPCT	201/I	0	7152508.	351.5	301.65	-0.087	323.6	0.50491	1.80E-02
	202/U	0	3576254.	351.5	301.65	-0.087	323.6	0.50491	1.80E-02
	203/B	0	3576254.	351.5	301.65	-0.087	323.6	0.50491	1.80E-02
155 SPCT	106/I	0	7152508.	357.8	2834.30	-1.616	334.1	0.50748	1.78E-02
	608/U	0	7152508.	357.8	2834.30	-1.616	334.1	0.50748	1.78E-02
	205/B	0	0.	357.8	2834.30	-1.616	334.1	0.50748	1.78E-02
158 SPCT	159/I	0	6748242.	357.8	2788.88	-1.516	334.1	0.50762	1.78E-02
	172/U	0	3374121.	357.8	2788.88	-1.516	334.1	0.50762	1.78E-02
	158/B	0	3374121.	357.8	2788.88	-1.516	334.1	0.50762	1.78E-02
159 SPCT	612/I	0	6748242.	357.9	2800.15	-1.540	334.1	0.50762	1.78E-02
	159/U	0	6748242.	357.9	2800.15	-1.540	334.1	0.50762	1.78E-02
	177/B	0	0.	357.9	2800.15	-1.540	334.1	0.50762	1.78E-02
160 SPCT	37/I	0	728404.	364.0	265.37	-0.055	336.7	0.52102	1.81E-02
	160/U	0	728404.	364.0	265.37	-0.055	336.7	0.52102	1.81E-02
	165/B	0	0.	364.0	265.37	-0.055	336.7	0.52102	1.81E-02
161 SPCT	36/I	0	595915.	417.0	634.12	-0.117	393.9	0.58685	1.88E-02
	161/U	0	595915.	417.0	634.12	-0.117	393.9	0.58685	1.88E-02
	164/B	0	0.	417.0	634.12	-0.117	393.9	0.58685	1.88E-02
162 SPCT	35/I	0	286422.	499.9	1096.46	-0.109	487.6	0.68706	2.03E-02
	162/U	0	286422.	499.9	1096.46	-0.109	487.6	0.68706	2.03E-02
	163/B	0	0.	499.9	1096.46	-0.109	487.6	0.68706	2.03E-02
163 SPCT	45/I	0	725741.	368.2	265.08	-0.049	341.2	0.52648	1.82E-02
	173/U	0	725741.	368.2	265.08	-0.049	341.2	0.52648	1.82E-02
	174/B	0	0.	368.2	265.08	-0.049	341.2	0.52648	1.82E-02
164 SPCT	40/I	0	589451.	415.8	635.24	-0.119	392.6	0.58532	1.88E-02
	179/U	0	589451.	415.8	635.24	-0.119	392.6	0.58532	1.88E-02
	175/B	0	0.	415.8	635.24	-0.119	392.6	0.58532	1.88E-02
165 SPCT	39/I	0	288395.	499.4	1097.11	-0.111	487.0	0.68637	2.03E-02
	178/U	0	288395.	499.4	1097.11	-0.111	487.0	0.68637	2.03E-02
	176/B	0	0.	499.4	1097.11	-0.111	487.0	0.68637	2.03E-02

IP7019154

COMPONENT PROPERTIES

COMP	STREAM /PORT	FLU ID	MASS FLOW (LBM/HR)	TEMP (F)	PRESS (PSIA)	QUALITY (R HUM) (-)	ENTH (B/LB)	ENTRPY (B/LB-F)	SPEC. VOLUME (FT3/LBM)
166 SDEM	403/I	0	268779.	800.8	267.50	1.269	1423.1	1.73296	2.75E+00
	166/U	0	132489.	800.8	267.50	1.269	1423.1	1.73296	2.75E+00
	224/B	0	136290.	800.8	267.50	1.269	1423.1	1.73296	2.75E+00
167 SDEM	402/I	0	610550.	638.3	641.31	1.149	1310.9	1.54538	9.26E-01
	167/U	0	309493.	638.3	641.31	1.149	1310.9	1.54538	9.26E-01
	170/B	0	301057.	638.3	641.31	1.149	1310.9	1.54538	9.26E-01
168 SDEM	401/I	0	574816.	782.6	1107.17	1.292	1372.6	1.54376	6.03E-01
	168/U	0	286422.	782.6	1107.17	1.292	1372.6	1.54376	6.03E-01
	169/B	0	288394.	782.6	1107.17	1.292	1372.6	1.54376	6.03E-01
173 SFIX	85/I	0	19969.	644.8	352.66	1.165	1335.6	1.62929	1.78E+00
	182/U	0	14769.	644.8	352.66	1.165	1335.6	1.62929	1.78E+00
	48/B	0	5200.	644.8	352.66	1.165	1335.6	1.62929	1.78E+00
174 MX51	83/IA	0	134010.	203.9	12.50	0.835	986.8	1.52787	2.61E+01
	141/IB	0	4192.	599.3	5.00	1.204	1335.6	2.09302	1.26E+02
	208/U	0	138202.	199.9	11.51	0.848	997.4	1.55138	2.86E+01
175 MX51	417/IA	0	138202.	199.9	11.51	0.848	997.4	1.55138	2.86E+01
	214/IB	0	18247.	60.0	15.00	-0.157	28.1	0.05561	1.60E-02
	227/U	0	156449.	199.9	11.51	0.732	884.4	1.37998	2.47E+01
176 SRCE	214/U	0	18247.	60.0	15.00	-0.157	28.1	0.05561	1.60E-02
219 FWH	155/T	0	1804700.	124.8	236.13	-0.334	93.4	0.17279	1.62E-02
	450/S	0	73832.	185.8	5.86	1.008	1141.5	1.84342	6.51E+01
	225/T	0	1804700.	166.0	236.13	-0.284	134.5	0.24071	1.64E-02
	226/D	0	73832.	169.0	5.86	0.000	137.0	0.24572	1.64E-02
301 MX51	69/IA	0	703126.	168.5	5.80	0.000	136.5	0.24497	1.66E-02
	226/IB	0	73832.	169.0	5.86	0.000	137.0	0.24572	1.64E-02
	301/U	0	776958.	168.6	5.80	0.000	136.5	0.24504	1.66E-02
302 MX51	301/IA	0	776958.	168.6	5.80	0.000	136.5	0.24504	1.66E-02
	21/IB	0	74244.	166.9	5.59	0.000	134.9	0.24247	1.64E-02
	302/U	0	851202.	168.4	5.78	0.000	136.4	0.24482	1.64E-02
303 MX51	302/IA	0	851202.	168.4	5.78	0.000	136.4	0.24482	1.64E-02
	321/IB	0	73574.	168.1	5.75	0.000	136.1	0.24440	1.64E-02

IP7019155

COMPONENT PROPERTIES

COMP	STREAM /PORT	FLU ID	MASS FLOW (LBM/HR)	TEMP (F)	PRESS (PSIA)	QUALITY (R HUM) (-)	ENTH (B/LB)	ENTRPY (B/LB-F)	SPEC. VOLUME (FT3/LBM)
305 SPCT	10/I	0	4458086.	223.7	14.06	1.007	1156.3	1.77028	2.86E+01
	305/U	0	1486326.	223.7	14.06	1.007	1156.3	1.77028	2.86E+01
	306/B	0	1485880.	223.7	14.06	1.007	1156.3	1.77028	2.86E+01
	307/C	0	1485880.	223.7	14.06	1.007	1156.3	1.77028	2.86E+01
319 FWH	153/T	0	1804700.	124.8	236.13	-0.334	93.4	0.17279	1.62E-02
	999/S	0	73574.	168.1	5.75	0.976	1109.8	1.79529	6.30E+01
	319/T	0	1804700.	164.6	236.13	-0.286	133.1	0.23847	1.64E-02
	321/D	0	73574.	168.1	5.75	0.000	136.1	0.24440	1.64E-02
334 M3WA	19/IA	0	1805241.	164.8	236.13	-0.285	133.4	0.23888	1.64E-02
	225/IB	0	1804700.	166.0	236.13	-0.284	134.5	0.24071	1.64E-02
	319/IC	0	1804700.	164.6	236.13	-0.286	133.1	0.23847	1.64E-02
	334/U	0	5414641.	165.1	236.13	-0.285	133.7	0.23935	1.64E-02
400 SINK	609/I	0	404266.	357.8	2834.30	-1.616	334.1	0.50748	1.78E-02
401 SFIX	684/I	0	574816.	782.6	1107.17	1.292	1372.6	1.54376	6.03E-01
	401/U	0	574816.	782.6	1107.17	1.292	1372.6	1.54376	6.03E-01
	407/B	0	0.	782.6	1107.17	1.292	1372.6	1.54376	6.03E-01
402 SFIX	171/I	0	610550.	638.3	641.31	1.149	1310.9	1.54538	9.26E-01
	402/U	0	610550.	638.3	641.31	1.149	1310.9	1.54538	9.26E-01
	408/B	0	0.	638.3	641.31	1.149	1310.9	1.54538	9.26E-01
403 SFIX	411/I	0	268779.	800.8	267.50	1.269	1423.1	1.73296	2.75E+00
	403/U	0	268779.	800.8	267.50	1.269	1423.1	1.73296	2.75E+00
	409/B	0	0.	800.8	267.50	1.269	1423.1	1.73296	2.75E+00
404 MX51	84/IA	0	138202.	199.9	11.51	0.848	997.4	1.55138	2.86E+01
	407/IB	0	0.	782.6	1107.17	1.292	1372.6	1.54376	6.03E-01
	414/U	0	138202.	199.9	11.51	0.848	997.4	1.55138	2.86E+01
405 MX51	414/IA	0	138202.	199.9	11.51	0.848	997.4	1.55138	2.86E+01
	408/IB	0	0.	638.3	641.31	1.149	1310.9	1.54538	9.26E-01
	419/U	0	138202.	199.9	11.51	0.848	997.4	1.55138	2.86E+01
406 MX51	419/IA	0	138202.	199.9	11.51	0.848	997.4	1.55138	2.86E+01
	409/IB	0	0.	800.8	267.50	1.269	1423.1	1.73296	2.75E+00
	417/U	0	138202.	199.9	11.51	0.848	997.4	1.55138	2.86E+01

IP7019156

COMPONENT PROPERTIES

COMP	STREAM /PORT	FLU ID	MASS FLOW (LBM/HR)	TEMP (F)	PRESS (PSIA)	QUALITY (R HUM) (-)	ENTH (B/LB)	ENTRPY (B/LB-F)	SPEC. VOLUME (FT3/LBM)
413 SFIX	187/I	0	0.	352.7	139.35	0.000	324.6	0.50674	1.80E-02
	413/U	0	0.	352.7	139.35	0.000	324.6	0.50674	1.80E-02
	421/B	0	0.	352.7	139.35	0.000	324.6	0.50674	1.80E-02
415 SFIX	56/I	0	0.	352.7	139.35	0.000	324.6	0.50674	1.80E-02
	418/U	0	0.	352.7	139.35	0.000	324.6	0.50674	1.80E-02
	416/B	0	0.	352.7	139.35	0.000	324.6	0.50674	1.80E-02
416 SINK	416/I	0	0.	352.7	139.35	0.000	324.6	0.50674	1.80E-02
417 SINK	421/I	0	0.	352.7	139.35	0.000	324.6	0.50674	1.80E-02
450 MX51	12/IA	0	63255.	170.7	6.10	0.974	1109.0	1.78764	5.95E+01
	211/IB	0	10577.	599.3	5.00	1.204	1335.6	2.09302	1.26E+02
	450/U	0	73832.	186.0	6.10	1.007	1141.5	1.83899	6.26E+01
600 MIXR	600/IA	0	7102510.	353.1	301.65	-0.085	325.3	0.50698	1.80E-02
	61/IB	0	49998.	115.1	434.82	-0.452	84.2	0.15585	1.62E-02
	199/U	0	7152508.	351.5	301.65	-0.087	323.6	0.50491	1.80E-02
608 SFIX	608/I	0	7152508.	357.8	2834.30	-1.616	334.1	0.50748	1.78E-02
	611/U	0	6748242.	357.8	2834.30	-1.616	334.1	0.50748	1.78E-02
	609/B	0	404266.	357.8	2834.30	-1.616	334.1	0.50748	1.78E-02
609 SFIX	611/I	0	6748242.	357.8	2834.30	-1.616	334.1	0.50748	1.78E-02
	612/U	0	6748242.	357.8	2834.30	-1.616	334.1	0.50748	1.78E-02
	610/B	0	0.	357.8	2834.30	-1.616	334.1	0.50748	1.78E-02
610 MX51	126/IA	0	5892248.	638.3	641.31	1.149	1310.9	1.54538	9.26E-01
	610/IB	0	0.	357.8	2834.30	-1.616	334.1	0.50748	1.78E-02
	613/U	0	5892248.	638.3	641.31	1.149	1310.9	1.54538	9.26E-01
781 M3WA	90/IA	0	131524.	95.0	0.82	0.948	1048.6	1.89770	3.83E+02
	49/IB	0	924776.	124.1	5.78	-0.044	92.1	0.17166	1.62E-02
	44/IC	0	0.	351.5	301.65	-0.087	323.6	0.50491	1.80E-02
	781/U	0	1056300.	95.0	0.82	0.142	211.2	0.38771	5.75E+01
999 MX51	81/IA	0	68698.	168.5	5.80	0.974	1108.1	1.79175	6.24E+01
	70/IB	0	4876.	168.5	5.80	1.000	1133.3	1.83178	6.40E+01
	999/U	0	73574.	168.5	5.80	0.976	1109.8	1.79440	6.25E+01

IP7019157

STREAM PROPERTIES

STRM NO.	STRM TYPE	COMP FRM/TO ID	FLU ID	MASS FLOW (LBM/HR)	TEMP (F)	PRESS (PSIA)	QUAL (HUM) (-)	ENTH (B/LB)	ENTRPY (B/LB-F)	SPEC. VOLUME (FT3/LBM)
1	0	1-U (+)	0	7104351.	903.9	1710.97	1.513	1423.1	1.53943	4.249E-01
		120-I (-)			903.9	1710.97	1.513	1423.1	1.53943	4.249E-01
3	0	3-U (+)	0	6512376.	783.1	1112.73	1.293	1372.6	1.54327	5.997E-01
		4-I (-)			783.1	1112.73	1.293	1372.6	1.54327	5.997E-01
4	0	4-U (+)	0	6512376.	637.4	641.31	1.148	1310.3	1.54485	9.244E-01
		121-I (-)			637.4	641.31	1.148	1310.3	1.54485	9.244E-01
5	0	5-U (+)	0	5894758.	915.7	435.79	1.352	1477.5	1.72170	1.834E+00
		68-IA(-)			915.7	435.79	1.352	1477.5	1.72170	1.834E+00
7	0	6-U (+)	0	5643138.	786.5	270.53	1.260	1415.5	1.72569	2.683E+00
		7-I (-)			786.5	270.53	1.260	1415.5	1.72569	2.683E+00
8	0	8-U (+)	0	4996437.	496.1	71.55	1.109	1280.2	1.74596	7.828E+00
		9-I (-)			496.1	71.55	1.109	1280.2	1.74596	7.828E+00
9	0	9-U (+)	0	4639037.	419.5	46.61	1.078	1245.2	1.75434	1.107E+01
		10-I (-)			419.5	46.61	1.078	1245.2	1.75434	1.107E+01
10	0	10-U (+)	0	4458086.	223.7	14.06	1.007	1156.3	1.77028	2.856E+01
		305-I (-)			223.7	14.06	1.007	1156.3	1.77028	2.856E+01
11	0	11-U (+)	0	1422625.	171.3	6.18	0.974	1109.0	1.78637	5.879E+01
		14-I (-)			171.3	6.18	0.974	1109.0	1.78637	5.879E+01
12	0	11-E (+)	0	63255.	170.7	6.10	0.974	1109.0	1.78764	5.947E+01
		450-IA(-)			170.7	6.10	0.974	1109.0	1.78764	5.947E+01
13	0	13-U (+)	0	1412082.	104.9	1.10	0.935	1040.0	1.85114	2.851E+02
		17-S (-)			104.9	1.10	0.935	1040.0	1.85114	2.851E+02
14	0	14-U (+)	0	1422625.	114.9	1.47	0.935	1044.5	1.82947	2.172E+02
		18-S (-)			114.9	1.47	0.935	1044.5	1.82947	2.172E+02
* 15	0	15-T (+)	0	5892248.	1000.0	598.34	1.428	1518.1	1.71626	1.415E+00
		67-IA(-)			1000.0	598.34	1.428	1518.1	1.71626	1.415E+00

IP70191158

STREAM PROPERTIES

STRM NO.	STRM TYPE	COMP FRM/TO ID	FLU ID	MASS FLOW (LBM/HR)	TEMP (F)	PRESS (PSIA)	QUAL (HUM) (-)	ENTH (B/LB)	ENTRPY (B/LB-F)	SPEC. VOLUME (FT3/LBM)
16	0	12-U (+)	0	1417183.	95.0	0.82	0.938	1039.0	1.88025	3.795E+02
		16-S (-)			95.0	0.82	0.938	1039.0	1.88025	3.795E+02
17	0	17-T (+)	0	47878545.	109.5	50.00	-0.186	77.6	0.14634	1.616E-02
		62-IB(-)			109.5	50.00	-0.186	77.6	0.14634	1.616E-02
18	0	16-D (+)	0	2473483.	95.0	0.82	0.000	63.0	0.12059	1.612E-02
		140-IA(-)			95.0	0.82	0.000	63.0	0.12059	1.612E-02
19	0	19-T (+)	0	1805241.	164.8	236.13	-0.285	133.4	0.23888	1.641E-02
		334-IA(-)			164.8	236.13	-0.285	133.4	0.23888	1.641E-02
20	0	17-D (+)	0	1412082.	104.9	1.10	0.000	72.9	0.13833	1.615E-02
		140-IB(-)			104.9	1.10	0.000	72.9	0.13833	1.615E-02
21	0	19-D (+)	0	74244.	166.9	5.59	0.000	134.9	0.24247	1.643E-02
		302-IB(-)			166.9	5.59	0.000	134.9	0.24247	1.643E-02
22	0	18-D (+)	0	5464640.	114.9	1.47	0.000	82.9	0.15583	1.618E-02
		131-I (-)			114.9	1.47	0.000	82.9	0.15583	1.618E-02
23	2	16-T (+)	0	95771455.	97.1	50.00	-0.200	65.3	0.12448	1.612E-02
		18-T (-)			95.4	50.00	-0.202	63.6	0.12136	1.611E-02
24	0	20-T (+)	0	5414641.	205.1	185.44	-0.206	173.7	0.30164	1.666E-02
		72-IA(-)			205.1	185.44	-0.206	173.7	0.30164	1.666E-02
25	0	21-T (+)	0	5414641.	275.0	185.44	-0.123	244.4	0.40283	1.721E-02
		74-IA(-)			275.0	185.44	-0.123	244.4	0.40283	1.721E-02
26	2	22-T (+)	0	5414641.	306.8	185.44	-0.084	276.9	0.44620	1.751E-02
		75-IA(-)			306.9	135.61	-0.052	276.9	0.44641	1.751E-02
27	0	23-D (+)	0	7102510.	352.7	139.35	0.000	324.6	0.50674	1.802E-02
		144-I (-)			352.7	139.35	0.000	324.6	0.50674	1.802E-02
28	0	7-E (+)	0	470636.	629.2	142.18	1.170	1341.3	1.73149	4.473E+00
		97-IA(-)			629.2	142.18	1.170	1341.3	1.73149	4.473E+00

IP7019159

STREAM PROPERTIES

STRM NO.	STRM TYPE	COMP FRM/TO ID	FLU ID	MASS FLOW (LBM/HR)	TEMP (F)	PRESS (PSIA)	QUAL (HUM) (-)	ENTH (B/LB)	ENTRPY (B/LB-F)	SPEC. VOLUME (FT3/LBM)
30	2	30-T (+)	0	5414641.	116.7	434.82	-0.450	85.9	0.15873	1.617E-02
		133-I (-)			117.3	236.13	-0.343	85.9	0.15977	1.618E-02
31	0	31-T (+)	0	5414641.	124.8	236.13	-0.334	93.4	0.17279	1.621E-02
		151-I (-)			124.8	236.13	-0.334	93.4	0.17279	1.621E-02
32	2	26-T (+)	0	3374121.	492.5	2747.08	-0.951	478.9	0.67152	1.986E-02
		28-T (-)			492.4	2741.28	-0.943	478.9	0.67152	1.986E-02
33	0	28-T (+)	0	3374121.	556.1	2725.56	-0.676	554.0	0.74794	2.138E-02
		114-IA(-)			556.1	2725.56	-0.676	554.0	0.74794	2.138E-02
34	2	24-T (+)	0	3374121.	408.2	2773.24	-1.304	386.9	0.57030	1.847E-02
		26-T (-)			408.2	2762.73	-1.285	386.8	0.57031	1.847E-02
35	0	28-D (+)	0	286422.	499.9	1096.46	-0.109	487.6	0.68706	2.035E-02
		162-I (-)			499.9	1096.46	-0.109	487.6	0.68706	2.035E-02
36	0	26-D (+)	0	595915.	417.0	634.12	-0.117	393.9	0.58685	1.885E-02
		161-I (-)			417.0	634.12	-0.117	393.9	0.58685	1.885E-02
37	0	24-D (+)	0	728404.	364.0	265.37	-0.055	336.7	0.52102	1.815E-02
		160-I (-)			364.0	265.37	-0.055	336.7	0.52102	1.815E-02
38	2	25-T (+)	0	3374121.	408.1	2773.24	-1.304	386.8	0.57020	1.847E-02
		27-T (-)			408.1	2762.73	-1.286	386.7	0.57021	1.847E-02
39	0	29-D (+)	0	288395.	499.4	1097.11	-0.111	487.0	0.68637	2.033E-02
		165-I (-)			499.4	1097.11	-0.111	487.0	0.68637	2.033E-02
40	0	27-D (+)	0	589451.	415.8	635.24	-0.119	392.6	0.58532	1.883E-02
		164-I (-)			415.8	635.24	-0.119	392.6	0.58532	1.883E-02
41	2	27-T (+)	0	3374121.	490.6	2747.08	-0.958	476.7	0.66926	1.982E-02
		29-T (-)			490.5	2741.27	-0.950	476.7	0.66926	1.982E-02
42	0	34-U (+)	0	3551255.	353.1	301.65	-0.085	325.3	0.50698	1.801E-02
		101-IB(-)			353.1	301.65	-0.085	325.3	0.50698	1.801E-02

IP7019160

STREAM PROPERTIES

STRM NO.	STRM TYPE	COMP FRM/TO ID	FLU ID	MASS FLOW (LBM/HR)	TEMP (F)	PRESS (PSIA)	QUAL (HUM) (-)	ENTH (B/LB)	ENTRPY (B/LB-F)	SPEC. VOLUME (FT3/LBM)
43	0	35-U (+)	0	3551255.	353.1	301.65	-0.085	325.3	0.50698	1.801E-02
		101-IA(-)			353.1	301.65	-0.085	325.3	0.50698	1.801E-02
44	0	36-B (+)	0	0.	351.5	301.65	-0.087	323.6	0.50491	1.799E-02
		781-IC(-)			351.5	301.65	-0.087	323.6	0.50491	1.799E-02
45	0	25-D (+)	0	725741.	368.2	265.08	-0.049	341.2	0.52648	1.820E-02
		163-I (-)			368.2	265.08	-0.049	341.2	0.52648	1.820E-02
46	0	29-T (+)	0	3374121.	554.9	2725.55	-0.681	552.4	0.74638	2.134E-02
		115-IA(-)			554.9	2725.55	-0.681	552.4	0.74638	2.134E-02
47	0	128-B (+)	0	1277.	637.4	641.31	1.148	1310.3	1.54485	9.244E-01
		40-IB(-)			637.4	641.31	1.148	1310.3	1.54485	9.244E-01
48	0	173-B (+)	0	5200.	644.8	352.66	1.165	1335.6	1.62929	1.777E+00
		40-IA(-)			644.8	352.66	1.165	1335.6	1.62929	1.777E+00
49	0	31-D (+)	0	924776.	124.1	5.78	-0.044	92.1	0.17166	1.622E-02
		781-IB(-)			124.1	5.78	-0.044	92.1	0.17166	1.622E-02
50	2	20-D (+)	0	708002.	175.3	13.32	-0.032	143.4	0.25581	1.648E-02
		139-I (-)			175.3	10.46	-0.020	143.4	0.25582	1.648E-02
51	0	21-D (+)	0	527052.	234.3	44.71	-0.043	202.7	0.34506	1.688E-02
		138-I (-)			234.3	44.71	-0.043	202.7	0.34506	1.688E-02
52	0	22-D (+)	0	169652.	284.4	70.21	-0.021	253.8	0.41601	1.730E-02
		137-I (-)			284.4	70.21	-0.021	253.8	0.41601	1.730E-02
54	0	39-U (+)	0	7134261.	996.7	2345.97	1.896	1461.2	1.53540	3.291E-01
		118-I (-)			996.7	2345.97	1.896	1461.2	1.53540	3.291E-01
55	0	32-T (+)	0	0.	352.7	139.35	0.000	324.6	0.50674	1.802E-02
		146-I (-)			352.7	139.35	0.000	324.6	0.50674	1.802E-02
56	0	33-T (+)	0	0.	352.7	139.35	0.000	324.6	0.50674	1.802E-02
		415-I (-)			352.7	139.35	0.000	324.6	0.50674	1.802E-02

IP7019161

STREAM PROPERTIES

STRM NO.	STRM TYPE	COMP FRM/TO ID	FLU ID	MASS FLOW (LBM/HR)	TEMP (F)	PRESS (PSIA)	QUAL (HUM) (-)	ENTH (B/LB)	ENTRPY (B/LB-F)	SPEC. VOLUME (FT3/LBM)
* 57	0	30-D (+)	0	7739.	203.9	12.50	0.000	172.0	0.29996	1.666E-02
		80-IA(-)			203.9	12.50	0.000	172.0	0.29996	1.666E-02
58	0	42-U (+)	0	2732320.	115.1	434.82	-0.452	84.2	0.15585	1.616E-02
		69-IB(-)			115.1	434.82	-0.452	84.2	0.15585	1.616E-02
59	0	59-U (+)	0	7134261.	1000.0	2412.20	1.947	1461.2	1.53267	3.200E-01
		116-I (-)			1000.0	2412.20	1.947	1461.2	1.53267	3.200E-01
60	0	43-U (+)	0	2732320.	115.1	434.82	-0.452	84.2	0.15585	1.616E-02
		69-IA(-)			115.1	434.82	-0.452	84.2	0.15585	1.616E-02
61	0	44-B (+)	0	49998.	115.1	434.82	-0.452	84.2	0.15585	1.616E-02
		600-IB(-)			115.1	434.82	-0.452	84.2	0.15585	1.616E-02
62	0	18-T (+)	0	95771455.	110.4	50.00	-0.185	78.5	0.14789	1.617E-02
		62-IA(-)			110.4	50.00	-0.185	78.5	0.14789	1.617E-02
63	0	37-UT(+)	0	126271.	114.9	1.47	0.927	1036.8	1.81599	2.155E+02
		80-IB(-)			114.9	1.47	0.927	1036.8	1.81599	2.155E+02
64	0	38-UT(+)	0	131524.	95.0	0.82	0.948	1048.6	1.89770	3.833E+02
		87-IA(-)			95.0	0.82	0.948	1048.6	1.89770	3.833E+02
66	0	66-U (+)	0	6502798.	638.3	641.31	1.149	1310.9	1.54538	9.255E-01
		126-I (-)			638.3	641.31	1.149	1310.9	1.54538	9.255E-01
67	2	67-U (+)	0	5894758.	1000.0	598.34	1.428	1518.0	1.71625	1.415E+00
		5-I (-)			1000.0	598.34	1.428	1518.0	1.71625	1.415E+00
68	0	68-U (+)	0	5911917.	915.5	435.79	1.352	1477.4	1.72159	1.834E+00
		6-I (-)			915.5	435.79	1.352	1477.4	1.72159	1.834E+00
69	0	65-U (+)	0	703126.	168.5	5.80	0.000	136.5	0.24497	1.662E-02
		301-IA(-)			168.5	5.80	0.000	136.5	0.24497	1.662E-02
70	0	65-B (+)	0	4876.	168.5	5.80	1.000	1133.3	1.83178	6.401E+01
		999-IB(-)			168.5	5.80	1.000	1133.3	1.83178	6.401E+01

IP7019162

STREAM PROPERTIES

STRM NO.	STRM TYPE	COMP FRM/TO ID	FLU ID	MASS FLOW (LBM/HR)	TEMP (F)	PRESS (PSIA)	QUAL (HUM) (-)	ENTH (B/LB)	ENTRPY (B/LB-F)	SPEC. VOLUME (FT3/LBM)
71	0	71-U (+)	0	5414641.	165.3	185.44	-0.253	133.7	0.23960	1.641E-02
		134-I (-)			165.3	185.44	-0.253	133.7	0.23960	1.641E-02
72	0	72-U (+)	0	5414641.	205.1	185.44	-0.206	173.7	0.30164	1.666E-02
		73-IA(-)			205.1	185.44	-0.206	173.7	0.30164	1.666E-02
73	0	73-U (+)	0	5414641.	205.1	185.44	-0.206	173.7	0.30164	1.666E-02
		135-I (-)			205.1	185.44	-0.206	173.7	0.30164	1.666E-02
74	0	74-U (+)	0	5414641.	275.1	185.44	-0.123	244.4	0.40283	1.721E-02
		136-I (-)			275.1	185.44	-0.123	244.4	0.40283	1.721E-02
75	0	75-U (+)	0	5414641.	306.9	135.61	-0.052	276.9	0.44641	1.751E-02
		23-FW(-)			306.9	135.61	-0.052	276.9	0.44641	1.751E-02
76	0	38-UP(+)	0	3576254.	357.8	2835.36	-1.619	334.1	0.50748	1.784E-02
		106-IB(-)			357.8	2835.36	-1.619	334.1	0.50748	1.784E-02
77	0	46-U (+)	0	1412082.	169.0	5.87	0.972	1106.4	1.78772	6.158E+01
		13-I (-)			169.0	5.87	0.972	1106.4	1.78772	6.158E+01
79	0	47-U (+)	0	1417183.	170.3	6.05	0.974	1108.1	1.78727	5.994E+01
		12-I (-)			170.3	6.05	0.974	1108.1	1.78727	5.994E+01
80	2	46-E (+)	0	74244.	168.5	5.80	0.973	1106.4	1.78900	6.229E+01
		19-S (-)			166.9	5.59	0.973	1106.4	1.79287	6.449E+01
81	2	47-E (+)	0	68698.	169.8	5.97	0.974	1108.1	1.78855	6.063E+01
		999-IA(-)			168.5	5.80	0.974	1108.1	1.79175	6.240E+01
82	0	82-U (+)	0	2286.	996.7	2345.97	1.896	1461.2	1.53540	3.291E-01
		83-IA(-)			996.7	2345.97	1.896	1461.2	1.53540	3.291E-01
83	0	80-U (+)	0	134010.	203.9	12.50	0.835	986.8	1.52787	2.606E+01
		174-IA(-)			203.9	12.50	0.835	986.8	1.52787	2.606E+01
84	0	81-U (+)	0	138202.	199.9	11.51	0.848	997.4	1.55138	2.857E+01
		404-IA(-)			199.9	11.51	0.848	997.4	1.55138	2.857E+01

IP7019163

STREAM PROPERTIES

STRM NO.	STRM TYPE	COMP FRM/TO ID	FLU ID	MASS FLOW (LBM/HR)	TEMP (F)	PRESS (PSIA)	QUAL (HUM) (-)	ENTH (B/LB)	ENTRPY (B/LB-F)	SPEC. VOLUME (FT3/LBM)
85	0	85-U (+)	0	19969.	644.8	352.66	1.165	1335.6	1.62929	1.777E+00
		173-I (-)			644.8	352.66	1.165	1335.6	1.62929	1.777E+00
86	0	83-U (+)	0	10759.	705.4	790.75	1.206	1342.4	1.55223	7.989E-01
		84-IA(-)			705.4	790.75	1.206	1342.4	1.55223	7.989E-01
87	0	87-U (+)	0	131524.	95.0	0.82	0.948	1048.6	1.89770	3.833E+02
		88-IA(-)			95.0	0.82	0.948	1048.6	1.89770	3.833E+02
88	0	88-U (+)	0	131524.	95.0	0.82	0.948	1048.6	1.89770	3.833E+02
		89-IA(-)			95.0	0.82	0.948	1048.6	1.89770	3.833E+02
89	0	89-U (+)	0	131524.	95.0	0.82	0.948	1048.6	1.89770	3.833E+02
		90-IA(-)			95.0	0.82	0.948	1048.6	1.89770	3.833E+02
90	0	90-U (+)	0	131524.	95.0	0.82	0.948	1048.6	1.89770	3.833E+02
		781-IA(-)			95.0	0.82	0.948	1048.6	1.89770	3.833E+02
93	0	93-U (+)	0	0.	499.6	1096.78	-0.110	487.3	0.68671	2.034E-02
		94-IA(-)			499.6	1096.78	-0.110	487.3	0.68671	2.034E-02
94	0	94-U (+)	0	0.	444.8	788.71	-0.120	424.6	0.62066	1.929E-02
		95-IA(-)			444.8	788.71	-0.120	424.6	0.62066	1.929E-02
95	0	95-U (+)	0	0.	392.7	439.72	-0.087	367.5	0.55706	1.851E-02
		81-IB(-)			392.7	439.72	-0.087	367.5	0.55706	1.851E-02
96	0	96-U (+)	0	20882.	637.4	641.31	1.148	1310.3	1.54485	9.244E-01
		97-IB(-)			637.4	641.31	1.148	1310.3	1.54485	9.244E-01
97	0	97-U (+)	0	491518.	626.6	142.18	1.168	1340.0	1.73028	4.461E+00
		98-IA(-)			626.6	142.18	1.168	1340.0	1.73028	4.461E+00
98	0	98-U (+)	0	491518.	626.6	142.18	1.168	1340.0	1.73028	4.461E+00
		143-I (-)			626.6	142.18	1.168	1340.0	1.73028	4.461E+00
99	0	99-U (+)	0	0.	352.7	139.35	0.000	324.6	0.50674	1.802E-02
		100-IB(-)			352.7	139.35	0.000	324.6	0.50674	1.802E-02

IP7019164

STREAM PROPERTIES

STRM NO.	STRM TYPE	COMP FRM/TO ID	FLU ID	MASS FLOW (LBM/HR)	TEMP (F)	PRESS (PSIA)	QUAL (HUM) (-)	ENTH (B/LB)	ENTRPY (B/LB-F)	SPEC. VOLUME (FT3/LBM)
100	0	100-U (+)	0	1454146.	366.1	265.37	-0.052	338.9	0.52375	1.817E-02
		23-D (-)			366.1	265.37	-0.052	338.9	0.52375	1.817E-02
101	0	101-U (+)	0	7102510.	353.1	301.65	-0.085	325.3	0.50698	1.801E-02
		150-I (-)			353.1	301.65	-0.085	325.3	0.50698	1.801E-02
102	0	84-U (+)	0	14818.	686.6	745.33	1.189	1333.6	1.55056	8.333E-01
		85-IA(-)			686.6	745.33	1.189	1333.6	1.55056	8.333E-01
104	0	44-U (+)	0	5414641.	115.1	434.82	-0.452	84.2	0.15585	1.616E-02
		30-T (-)			115.1	434.82	-0.452	84.2	0.15585	1.616E-02
105	0	62-U (+)	0	143650000.	110.1	50.00	-0.186	78.2	0.14738	1.616E-02
		63-I (-)			110.1	50.00	-0.186	78.2	0.14738	1.616E-02
106	0	106-U (+)	0	7152508.	357.8	2834.30	-1.616	334.1	0.50748	1.784E-02
		155-I (-)			357.8	2834.30	-1.616	334.1	0.50748	1.784E-02
107	0	60-U (+)	0	143650000.	72.3	50.00	-0.226	40.5	0.07899	1.605E-02
		61-I (-)			72.3	50.00	-0.226	40.5	0.07899	1.605E-02
108	2	61-U (+)	0	95771455.	72.3	50.00	-0.226	40.5	0.07899	1.605E-02
		16-T (-)			81.0	50.00	-0.217	49.2	0.09520	1.607E-02
109	0	109-U (+)	0	1454146.	366.1	265.37	-0.052	338.9	0.52375	1.817E-02
		100-IA(-)			366.1	265.37	-0.052	338.9	0.52375	1.817E-02
110	0	110-U (+)	0	1454146.	366.1	265.37	-0.052	338.9	0.52375	1.817E-02
		109-IA(-)			366.1	265.37	-0.052	338.9	0.52375	1.817E-02
111	0	111-U (+)	0	1454146.	366.1	265.37	-0.052	338.9	0.52375	1.817E-02
		110-IA(-)			366.1	265.37	-0.052	338.9	0.52375	1.817E-02
114	2	114-U (+)	0	6748242.	555.5	2725.56	-0.678	553.2	0.74716	2.136E-02
		64-I (-)			555.4	2704.94	-0.657	553.2	0.74721	2.136E-02
115	0	115-U (+)	0	3374121.	554.9	2725.55	-0.681	552.4	0.74638	2.134E-02
		114-IB(-)			554.9	2725.55	-0.681	552.4	0.74638	2.134E-02

IP7019165

STREAM PROPERTIES

STRM NO.	STRM TYPE	COMP FRM/TO ID	FLU ID	MASS FLOW (LBM/HR)	TEMP (F)	PRESS (PSIA)	QUAL (HUM) (-)	ENTH (B/LB)	ENTRPY (B/LB-F)	SPEC. VOLUME (FT3/LBM)
116	0	116-U (+)	0	7134261.	1000.0	2412.20	1.947	1461.2	1.53267	3.200E-01
		117-I (-)			1000.0	2412.20	1.947	1461.2	1.53267	3.200E-01
117	0	117-U (+)	0	7134261.	1000.0	2412.20	1.947	1461.2	1.53267	3.200E-01
		39-I (-)			1000.0	2412.20	1.947	1461.2	1.53267	3.200E-01
118	0	118-U (+)	0	7104351.	996.7	2345.97	1.896	1461.2	1.53540	3.291E-01
		1-I (-)			996.7	2345.97	1.896	1461.2	1.53540	3.291E-01
119	0	116-B (+)	0	0.	1000.0	2412.20	1.947	1461.2	1.53267	3.200E-01
		82-IA(-)			1000.0	2412.20	1.947	1461.2	1.53267	3.200E-01
120	0	120-U (+)	0	7087192.	903.9	1710.97	1.513	1423.1	1.53943	4.249E-01
		3-I (-)			903.9	1710.97	1.513	1423.1	1.53943	4.249E-01
121	0	121-U (+)	0	6488562.	637.4	641.31	1.148	1310.3	1.54485	9.244E-01
		124-I (-)			637.4	641.31	1.148	1310.3	1.54485	9.244E-01
122	0	119-U (+)	0	27624.	996.7	2345.97	1.896	1461.2	1.53540	3.291E-01
		122-I (-)			996.7	2345.97	1.896	1461.2	1.53540	3.291E-01
123	0	121-B (+)	0	23815.	637.4	641.31	1.148	1310.3	1.54485	9.244E-01
		123-I (-)			637.4	641.31	1.148	1310.3	1.54485	9.244E-01
124	0	124-U (+)	0	6478962.	637.4	641.31	1.148	1310.3	1.54485	9.244E-01
		128-I (-)			637.4	641.31	1.148	1310.3	1.54485	9.244E-01
125	0	118-B (+)	0	29910.	996.7	2345.97	1.896	1461.2	1.53540	3.291E-01
		119-I (-)			996.7	2345.97	1.896	1461.2	1.53540	3.291E-01
126	0	126-U (+)	0	5892248.	638.3	641.31	1.149	1310.9	1.54538	9.255E-01
		610-IA(-)			638.3	641.31	1.149	1310.9	1.54538	9.255E-01
127	2	127-U (+)	0	5166089.	629.2	142.18	1.170	1341.3	1.73149	4.473E+00
		8-I (-)			628.9	140.55	1.170	1341.3	1.73274	4.525E+00
128	0	129-U (+)	0	5151.	629.2	142.18	1.170	1341.3	1.73149	4.473E+00
		85-IB(-)			629.2	142.18	1.170	1341.3	1.73149	4.473E+00

IP7019166

STREAM PROPERTIES

STRM NO.	STRM TYPE	COMP FRM/TO ID	FLU ID	MASS FLOW (LBM/HR)	TEMP (F)	PRESS (PSIA)	QUAL (HUM) (-)	ENTH (B/LB)	ENTRPY (B/LB-F)	SPEC. VOLUME (FT3/LBM)
129	2	61-B (+)	0	47878545.	72.3	50.00	-0.226	40.5	0.07899	1.605E-02
		17-T (-)			80.9	50.00	-0.217	49.1	0.09496	1.607E-02
130	0	123-U (+)	0	15342.	637.4	641.31	1.148	1310.3	1.54485	9.244E-01
		96-IB(-)			637.4	641.31	1.148	1310.3	1.54485	9.244E-01
131	0	122-U (+)	0	25113.	996.7	2345.97	1.896	1461.2	1.53540	3.291E-01
		66-IB(-)			996.7	2345.97	1.896	1461.2	1.53540	3.291E-01
132	0	132-U (+)	0	4042015.	130.3	11.34	-0.070	98.3	0.18218	1.625E-02
		18-D (-)			130.3	11.34	-0.070	98.3	0.18218	1.625E-02
133	0	133-U (+)	0	5414641.	117.3	236.13	-0.343	85.9	0.15977	1.618E-02
		31-T (-)			117.3	236.13	-0.343	85.9	0.15977	1.618E-02
134	0	133-B (+)	0	0.	117.3	236.13	-0.343	85.9	0.15977	1.618E-02
		71-IB(-)			117.3	236.13	-0.343	85.9	0.15977	1.618E-02
135	0	131-U (+)	0	2732320.	114.9	1.47	0.000	82.9	0.15583	1.618E-02
		42-I (-)			114.9	1.47	0.000	82.9	0.15583	1.618E-02
136	0	125-U (+)	0	5540.	637.4	641.31	1.148	1310.3	1.54485	9.244E-01
		96-IA(-)			637.4	641.31	1.148	1310.3	1.54485	9.244E-01
137	0	128-U (+)	0	6477685.	637.4	641.31	1.148	1310.3	1.54485	9.244E-01
		66-IA(-)			637.4	641.31	1.148	1310.3	1.54485	9.244E-01
138	0	134-U (+)	0	5414641.	165.3	185.44	-0.253	133.7	0.23960	1.641E-02
		20-T (-)			165.3	185.44	-0.253	133.7	0.23960	1.641E-02
139	0	135-U (+)	0	5414641.	205.1	185.44	-0.206	173.7	0.30164	1.666E-02
		21-T (-)			205.1	185.44	-0.206	173.7	0.30164	1.666E-02
140	0	136-U (+)	0	5414641.	275.1	185.44	-0.123	244.4	0.40283	1.721E-02
		22-T (-)			275.1	185.44	-0.123	244.4	0.40283	1.721E-02
141	0	141-U (+)	0	4192.	599.3	5.00	1.204	1335.6	2.09302	1.261E+02
		174-IB(-)			599.3	5.00	1.204	1335.6	2.09302	1.261E+02

IP7019167

STREAM PROPERTIES

STRM NO.	STRM TYPE	COMP FRM/TO ID	FLU ID	MASS FLOW (LBM/HR)	TEMP (F)	PRESS (PSIA)	QUAL (HUM) (-)	ENTH (B/LB)	ENTRPY (B/LB-F)	SPEC. VOLUME (FT3/LBM)
142	2	142-U (+)	0	233723.	626.6	142.18	1.168	1340.0	1.73028	4.461E+00
		23-S (-)			626.2	139.35	1.168	1340.0	1.73246	4.552E+00
143	0	143-U (+)	0	365247.	626.6	142.18	1.168	1340.0	1.73028	4.461E+00
		142-I (-)			626.6	142.18	1.168	1340.0	1.73028	4.461E+00
144	0	134-B (+)	0	0.	165.3	185.44	-0.253	133.7	0.23960	1.641E-02
		72-IB(-)			165.3	185.44	-0.253	133.7	0.23960	1.641E-02
145	0	139-B (+)	0	0.	175.3	10.46	-0.020	143.4	0.25582	1.648E-02
		89-IB(-)			175.3	10.46	-0.020	143.4	0.25582	1.648E-02
146	2	139-U (+)	0	708002.	175.3	10.46	-0.020	143.4	0.25582	1.648E-02
		65-I (-)			168.5	5.80	0.006	143.4	0.25590	4.574E-01
147	0	135-B (+)	0	0.	205.1	185.44	-0.206	173.7	0.30164	1.666E-02
		74-IB(-)			205.1	185.44	-0.206	173.7	0.30164	1.666E-02
148	0	127-B (+)	0	6413.	629.2	142.18	1.170	1341.3	1.73149	4.473E+00
		129-I (-)			629.2	142.18	1.170	1341.3	1.73149	4.473E+00
149	0	138-U (+)	0	527052.	234.3	44.71	-0.043	202.7	0.34506	1.688E-02
		20-D (-)			234.3	44.71	-0.043	202.7	0.34506	1.688E-02
150	0	136-B (+)	0	0.	275.1	185.44	-0.123	244.4	0.40283	1.721E-02
		75-IB(-)			275.1	185.44	-0.123	244.4	0.40283	1.721E-02
151	2	142-B (+)	0	131524.	626.6	142.18	1.168	1340.0	1.73028	4.461E+00
		38-IT(-)			626.4	140.74	1.168	1340.0	1.73138	4.507E+00
152	2	143-B (+)	0	126271.	626.6	142.18	1.168	1340.0	1.73028	4.461E+00
		37-IT(-)			626.4	140.74	1.168	1340.0	1.73138	4.507E+00
153	0	151-C (+)	0	1804700.	124.8	236.13	-0.334	93.4	0.17279	1.621E-02
		319-T (-)			124.8	236.13	-0.334	93.4	0.17279	1.621E-02
154	0	151-U (+)	0	1805241.	124.8	236.13	-0.334	93.4	0.17279	1.621E-02
		19-T (-)			124.8	236.13	-0.334	93.4	0.17279	1.621E-02

IP7019168

STREAM PROPERTIES

STRM NO.	STRM TYPE	COMP FRM/TO ID	FLU ID	MASS FLOW (LBM/HR)	TEMP (F)	PRESS (PSIA)	QUAL (HUM) (-)	ENTH (B/LB)	ENTRPY (B/LB-F)	SPEC. VOLUME (FT3/LBM)
155	0	151-B (+)	0	1804700.	124.8	236.13	-0.334	93.4	0.17279	1.621E-02
		219-T (-)			124.8	236.13	-0.334	93.4	0.17279	1.621E-02
156	0	122-B (+)	0	2511.	996.7	2345.97	1.896	1461.2	1.53540	3.291E-01
		67-IB(-)			996.7	2345.97	1.896	1461.2	1.53540	3.291E-01
157	0	119-B (+)	0	2286.	996.7	2345.97	1.896	1461.2	1.53540	3.291E-01
		82-IB(-)			996.7	2345.97	1.896	1461.2	1.53540	3.291E-01
158	0	158-B (+)	0	3374121.	357.8	2788.88	-1.516	334.1	0.50762	1.785E-02
		24-T (-)			357.8	2788.88	-1.516	334.1	0.50762	1.785E-02
159	2	159-U (+)	0	6748242.	357.9	2800.15	-1.540	334.1	0.50762	1.784E-02
		158-I (-)			357.8	2788.88	-1.516	334.1	0.50762	1.785E-02
160	0	160-U (+)	0	728404.	364.0	265.37	-0.055	336.7	0.52102	1.815E-02
		111-IA(-)			364.0	265.37	-0.055	336.7	0.52102	1.815E-02
161	0	161-U (+)	0	595915.	417.0	634.12	-0.117	393.9	0.58685	1.885E-02
		24-D (-)			417.0	634.12	-0.117	393.9	0.58685	1.885E-02
162	0	162-U (+)	0	286422.	499.9	1096.46	-0.109	487.6	0.68706	2.035E-02
		26-D (-)			499.9	1096.46	-0.109	487.6	0.68706	2.035E-02
163	0	162-B (+)	0	0.	499.9	1096.46	-0.109	487.6	0.68706	2.035E-02
		93-IA(-)			499.9	1096.46	-0.109	487.6	0.68706	2.035E-02
164	0	161-B (+)	0	0.	417.0	634.12	-0.117	393.9	0.58685	1.885E-02
		94-IC(-)			417.0	634.12	-0.117	393.9	0.58685	1.885E-02
165	0	160-B (+)	0	0.	364.0	265.37	-0.055	336.7	0.52102	1.815E-02
		95-IC(-)			364.0	265.37	-0.055	336.7	0.52102	1.815E-02
166	2	166-U (+)	0	132489.	800.8	267.50	1.269	1423.1	1.73296	2.748E+00
		24-S (-)			800.6	265.37	1.269	1423.1	1.73382	2.770E+00
167	2	167-U (+)	0	309493.	638.3	641.31	1.149	1310.9	1.54538	9.255E-01
		26-S (-)			637.4	634.12	1.148	1310.9	1.54651	9.361E-01

IP7019169

STREAM PROPERTIES

STRM NO.	STRM TYPE	COMP FRM/TO ID	FLU ID	MASS FLOW (LBM/HR)	TEMP (F)	PRESS (PSIA)	QUAL (HUM) (-)	ENTH (B/LB)	ENTRPY (B/LB-F)	SPEC. VOLUME (FT3/LBM)
168	2	168-U (+)	0	286422.	782.6	1107.17	1.292	1372.6	1.54376	6.028E-01
		28-S (-)			781.7	1096.46	1.291	1372.6	1.54473	6.087E-01
169	2	168-B (+)	0	288394.	782.6	1107.17	1.292	1372.6	1.54376	6.028E-01
		29-S (-)			781.8	1097.11	1.291	1372.6	1.54467	6.083E-01
170	2	167-B (+)	0	301057.	638.3	641.31	1.149	1310.9	1.54538	9.255E-01
		27-S (-)			637.5	635.24	1.148	1310.9	1.54633	9.344E-01
171	0	126-B (+)	0	610550.	638.3	641.31	1.149	1310.9	1.54538	9.255E-01
		402-I (-)			638.3	641.31	1.149	1310.9	1.54538	9.255E-01
172	0	158-U (+)	0	3374121.	357.8	2788.88	-1.516	334.1	0.50762	1.785E-02
		25-T (-)			357.8	2788.88	-1.516	334.1	0.50762	1.785E-02
173	0	163-U (+)	0	725741.	368.2	265.08	-0.049	341.2	0.52648	1.820E-02
		111-IB(-)			368.2	265.08	-0.049	341.2	0.52648	1.820E-02
174	0	163-B (+)	0	0.	368.2	265.08	-0.049	341.2	0.52648	1.820E-02
		95-IB(-)			368.2	265.08	-0.049	341.2	0.52648	1.820E-02
175	0	164-B (+)	0	0.	415.8	635.24	-0.119	392.6	0.58532	1.883E-02
		94-IB(-)			415.8	635.24	-0.119	392.6	0.58532	1.883E-02
176	0	165-B (+)	0	0.	499.4	1097.11	-0.111	487.0	0.68637	2.033E-02
		93-IB(-)			499.4	1097.11	-0.111	487.0	0.68637	2.033E-02
177	0	159-B (+)	0	0.	357.9	2800.15	-1.540	334.1	0.50762	1.784E-02
		115-IB(-)			357.9	2800.15	-1.540	334.1	0.50762	1.784E-02
178	0	165-U (+)	0	288395.	499.4	1097.11	-0.111	487.0	0.68637	2.033E-02
		27-D (-)			499.4	1097.11	-0.111	487.0	0.68637	2.033E-02
179	0	164-U (+)	0	589451.	415.8	635.24	-0.119	392.6	0.58532	1.883E-02
		25-D (-)			415.8	635.24	-0.119	392.6	0.58532	1.883E-02
180	0	120-B (+)	0	17159.	903.9	1710.97	1.513	1423.1	1.53943	4.249E-01
		68-IB(-)			903.9	1710.97	1.513	1423.1	1.53943	4.249E-01

IP7019170

STREAM PROPERTIES

STRM NO.	STRM TYPE	COMP FRM/TO ID	FLU ID	MASS FLOW (LBM/HR)	TEMP (F)	PRESS (PSIA)	QUAL (HUM) (-)	ENTH (B/LB)	ENTRPY (B/LB-F)	SPEC. VOLUME (FT3/LBM)
181	0	129-B (+)	0	1262.	629.2	142.18	1.170	1341.3	1.73149	4.473E+00
		40-IC(-)			629.2	142.18	1.170	1341.3	1.73149	4.473E+00
182	0	173-U (+)	0	14769.	644.8	352.66	1.165	1335.6	1.62929	1.777E+00
		141-I (-)			644.8	352.66	1.165	1335.6	1.62929	1.777E+00
183	0	123-B (+)	0	8472.	637.4	641.31	1.148	1310.3	1.54485	9.244E-01
		83-IB(-)			637.4	641.31	1.148	1310.3	1.54485	9.244E-01
184	0	124-B (+)	0	9599.	637.4	641.31	1.148	1310.3	1.54485	9.244E-01
		125-I (-)			637.4	641.31	1.148	1310.3	1.54485	9.244E-01
186	0	125-B (+)	0	4060.	637.4	641.31	1.148	1310.3	1.54485	9.244E-01
		84-IB(-)			637.4	641.31	1.148	1310.3	1.54485	9.244E-01
187	0	146-U (+)	0	0.	352.7	139.35	0.000	324.6	0.50674	1.802E-02
		413-I (-)			352.7	139.35	0.000	324.6	0.50674	1.802E-02
191	0	146-B (+)	0	0.	352.7	139.35	0.000	324.6	0.50674	1.802E-02
		99-IA(-)			352.7	139.35	0.000	324.6	0.50674	1.802E-02
192	0	144-B (+)	0	0.	352.7	139.35	0.000	324.6	0.50674	1.802E-02
		32-T (-)			352.7	139.35	0.000	324.6	0.50674	1.802E-02
193	0	144-U (+)	0	7102510.	352.7	139.35	0.000	324.6	0.50674	1.802E-02
		145-I (-)			352.7	139.35	0.000	324.6	0.50674	1.802E-02
194	0	145-B (+)	0	0.	352.7	139.35	0.000	324.6	0.50674	1.802E-02
		33-T (-)			352.7	139.35	0.000	324.6	0.50674	1.802E-02
196	0	148-U (+)	0	3551255.	352.7	139.35	0.000	324.6	0.50674	1.802E-02
		35-I (-)			352.7	139.35	0.000	324.6	0.50674	1.802E-02
197	0	147-U (+)	0	0.	352.7	139.35	0.000	324.6	0.50674	1.802E-02
		73-IB(-)			352.7	139.35	0.000	324.6	0.50674	1.802E-02
199	0	600-U (+)	0	7152508.	351.5	301.65	-0.087	323.6	0.50491	1.799E-02
		36-I (-)			351.5	301.65	-0.087	323.6	0.50491	1.799E-02

IP7019171

STREAM PROPERTIES

STRM NO.	STRM TYPE	COMP FRM/TO ID	FLU ID	MASS FLOW (LBM/HR)	TEMP (F)	PRESS (PSIA)	QUAL (HUM) (-)	ENTH (B/LB)	ENTRPY (B/LB-F)	SPEC. VOLUME (FT3/LBM)
200	0	148-B (+)	0	3551255.	352.7	139.35	0.000	324.6	0.50674	1.802E-02
		34-I (-)			352.7	139.35	0.000	324.6	0.50674	1.802E-02
201	0	36-U (+)	0	7152508.	351.5	301.65	-0.087	323.6	0.50491	1.799E-02
		153-I (-)			351.5	301.65	-0.087	323.6	0.50491	1.799E-02
202	0	153-U (+)	0	3576254.	351.5	301.65	-0.087	323.6	0.50491	1.799E-02
		37-IP(-)			351.5	301.65	-0.087	323.6	0.50491	1.799E-02
203	0	153-B (+)	0	3576254.	351.5	301.65	-0.087	323.6	0.50491	1.799E-02
		38-IP(-)			351.5	301.65	-0.087	323.6	0.50491	1.799E-02
204	0	150-B (+)	0	0.	353.1	301.65	-0.085	325.3	0.50698	1.801E-02
		109-IB(-)			353.1	301.65	-0.085	325.3	0.50698	1.801E-02
205	0	155-B (+)	0	0.	357.8	2834.30	-1.616	334.1	0.50748	1.784E-02
		110-IB(-)			357.8	2834.30	-1.616	334.1	0.50748	1.784E-02
207	0	145-U (+)	0	7102510.	352.7	139.35	0.000	324.6	0.50674	1.802E-02
		148-I (-)			352.7	139.35	0.000	324.6	0.50674	1.802E-02
208	0	174-U (+)	0	138202.	199.9	11.51	0.848	997.4	1.55138	2.857E+01
		81-IA(-)			199.9	11.51	0.848	997.4	1.55138	2.857E+01
210	0	40-U (+)	0	7739.	632.2	299.92	1.159	1332.3	1.64341	2.078E+00
		30-S (-)			632.2	299.92	1.159	1332.3	1.64341	2.078E+00
211	0	141-B (+)	0	10577.	599.3	5.00	1.204	1335.6	2.09302	1.261E+02
		450-IB(-)			599.3	5.00	1.204	1335.6	2.09302	1.261E+02
212	0	131-B (+)	0	2732320.	114.9	1.47	0.000	82.9	0.15583	1.618E-02
		43-I (-)			114.9	1.47	0.000	82.9	0.15583	1.618E-02
213	0	69-U (+)	0	5464640.	115.1	434.82	-0.452	84.2	0.15585	1.616E-02
		44-I (-)			115.1	434.82	-0.452	84.2	0.15585	1.616E-02
214	0	176-U (+)	0	18247.	60.0	15.00	-0.157	28.1	0.05561	1.603E-02
		175-IB(-)			60.0	15.00	-0.157	28.1	0.05561	1.603E-02

IP7019172

STREAM PROPERTIES

STRM NO.	STRM TYPE	COMP FRM/TO ID	FLU ID	MASS FLOW (LBM/HR)	TEMP (F)	PRESS (PSIA)	QUAL (HUM) (-)	ENTH (B/LB)	ENTRPY (B/LB-F)	SPEC. VOLUME (FT3/LBM)
215	0	140-U (+)	0	3885565.	98.6	0.92	-0.000	66.6	0.12713	1.613E-02
		132-IA(-)			98.6	0.92	-0.000	66.6	0.12713	1.613E-02
218	0	138-B (+)	0	0.	234.3	44.71	-0.043	202.7	0.34506	1.688E-02
		88-IB(-)			234.3	44.71	-0.043	202.7	0.34506	1.688E-02
219	0	137-U (+)	0	169652.	284.4	70.21	-0.021	253.8	0.41601	1.730E-02
		21-D (-)			284.4	70.21	-0.021	253.8	0.41601	1.730E-02
220	0	137-B (+)	0	0.	284.4	70.21	-0.021	253.8	0.41601	1.730E-02
		87-IB(-)			284.4	70.21	-0.021	253.8	0.41601	1.730E-02
222	0	117-B (+)	0	0.	1000.0	2412.20	1.947	1461.2	1.53267	3.200E-01
		98-IB(-)			1000.0	2412.20	1.947	1461.2	1.53267	3.200E-01
223	0	147-B (+)	0	0.	352.7	139.35	0.000	324.6	0.50674	1.802E-02
		99-IB(-)			352.7	139.35	0.000	324.6	0.50674	1.802E-02
224	2	166-B (+)	0	136290.	800.8	267.50	1.269	1423.1	1.73296	2.748E+00
		25-S (-)			800.6	265.08	1.269	1423.1	1.73394	2.773E+00
225	0	219-T (+)	0	1804700.	166.0	236.13	-0.284	134.5	0.24071	1.641E-02
		334-IB(-)			166.0	236.13	-0.284	134.5	0.24071	1.641E-02
226	0	219-D (+)	0	73832.	169.0	5.86	0.000	137.0	0.24572	1.644E-02
		301-IB(-)			169.0	5.86	0.000	137.0	0.24572	1.644E-02
227	0	175-U (+)	0	156449.	199.9	11.51	0.732	884.4	1.37998	2.468E+01
		132-IB(-)			199.9	11.51	0.732	884.4	1.37998	2.468E+01
301	0	301-U (+)	0	776958.	168.6	5.80	0.000	136.5	0.24504	1.662E-02
		302-IA(-)			168.6	5.80	0.000	136.5	0.24504	1.662E-02
302	0	302-U (+)	0	851202.	168.4	5.78	0.000	136.4	0.24482	1.644E-02
		303-IA(-)			168.4	5.78	0.000	136.4	0.24482	1.644E-02
303	0	303-U (+)	0	924776.	168.4	5.78	0.000	136.4	0.24479	1.644E-02
		31-S (-)			168.4	5.78	0.000	136.4	0.24479	1.644E-02

IP7019173

STREAM PROPERTIES

STRM NO.	STRM TYPE	COMP FRM/TO ID	FLU ID	MASS FLOW (LBM/HR)	TEMP (F)	PRESS (PSIA)	QUAL (HUM) (-)	ENTH (B/LB)	ENTRPY (B/LB-F)	SPEC. VOLUME (FT3/LBM)
305	0	305-U (+)	0	1486326.	223.7	14.06	1.007	1156.3	1.77028	2.856E+01
		46-I (-)			223.7	14.06	1.007	1156.3	1.77028	2.856E+01
306	0	305-B (+)	0	1485880.	223.7	14.06	1.007	1156.3	1.77028	2.856E+01
		47-I (-)			223.7	14.06	1.007	1156.3	1.77028	2.856E+01
307	0	305-C (+)	0	1485880.	223.7	14.06	1.007	1156.3	1.77028	2.856E+01
		11-I (-)			223.7	14.06	1.007	1156.3	1.77028	2.856E+01
319	0	319-T (+)	0	1804700.	164.6	236.13	-0.286	133.1	0.23847	1.641E-02
		334-IC(-)			164.6	236.13	-0.286	133.1	0.23847	1.641E-02
321	0	319-D (+)	0	73574.	168.1	5.75	0.000	136.1	0.24440	1.644E-02
		303-IB(-)			168.1	5.75	0.000	136.1	0.24440	1.644E-02
334	2	334-U (+)	0	5414641.	165.1	236.13	-0.285	133.7	0.23935	1.641E-02
		71-IA(-)			165.3	185.44	-0.253	133.7	0.23960	1.641E-02
401	0	401-U (+)	0	574816.	782.6	1107.17	1.292	1372.6	1.54376	6.028E-01
		168-I (-)			782.6	1107.17	1.292	1372.6	1.54376	6.028E-01
402	0	402-U (+)	0	610550.	638.3	641.31	1.149	1310.9	1.54538	9.255E-01
		167-I (-)			638.3	641.31	1.149	1310.9	1.54538	9.255E-01
403	0	403-U (+)	0	268779.	800.8	267.50	1.269	1423.1	1.73296	2.748E+00
		166-I (-)			800.8	267.50	1.269	1423.1	1.73296	2.748E+00
404	2	8-E (+)	0	169652.	520.2	70.65	1.122	1292.1	1.75972	8.142E+00
		22-S (-)			520.1	70.21	1.122	1292.1	1.76041	8.194E+00
405	2	9-E (+)	0	357399.	429.4	45.97	1.083	1250.1	1.76139	1.136E+01
		21-S (-)			429.0	44.71	1.084	1250.1	1.76441	1.168E+01
406	2	10-E (+)	0	180951.	246.0	13.86	1.018	1167.2	1.78754	3.000E+01
		20-S (-)			245.7	13.32	1.019	1167.2	1.79183	3.120E+01
407	0	401-B (+)	0	0.	782.6	1107.17	1.292	1372.6	1.54376	6.028E-01
		404-IB(-)			782.6	1107.17	1.292	1372.6	1.54376	6.028E-01

IP7019174

STREAM PROPERTIES

STRM NO.	STRM TYPE	COMP FRM/TO ID	FLU ID	MASS FLOW (LBM/HR)	TEMP (F)	PRESS (PSIA)	QUAL (HUM) (-)	ENTH (B/LB)	ENTRPY (B/LB-F)	SPEC. VOLUME (FT3/LBM)
408	0	402-B (+)	0	0.	638.3	641.31	1.149	1310.9	1.54538	9.255E-01
		405-IB(-)			638.3	641.31	1.149	1310.9	1.54538	9.255E-01
409	0	403-B (+)	0	0.	800.8	267.50	1.269	1423.1	1.73296	2.748E+00
		406-IB(-)			800.8	267.50	1.269	1423.1	1.73296	2.748E+00
411	0	6-E (+)	0	268779.	800.8	267.50	1.269	1423.1	1.73296	2.748E+00
		403-I (-)			800.8	267.50	1.269	1423.1	1.73296	2.748E+00
413	0	413-U (+)	0	0.	352.7	139.35	0.000	324.6	0.50674	1.802E-02
		90-IB(-)			352.7	139.35	0.000	324.6	0.50674	1.802E-02
414	0	404-U (+)	0	138202.	199.9	11.51	0.848	997.4	1.55138	2.857E+01
		405-IA(-)			199.9	11.51	0.848	997.4	1.55138	2.857E+01
416	0	415-B (+)	0	0.	352.7	139.35	0.000	324.6	0.50674	1.802E-02
		416-I (-)			352.7	139.35	0.000	324.6	0.50674	1.802E-02
417	0	406-U (+)	0	138202.	199.9	11.51	0.848	997.4	1.55138	2.857E+01
		175-IA(-)			199.9	11.51	0.848	997.4	1.55138	2.857E+01
418	0	415-U (+)	0	0.	352.7	139.35	0.000	324.6	0.50674	1.802E-02
		147-I (-)			352.7	139.35	0.000	324.6	0.50674	1.802E-02
419	0	405-U (+)	0	138202.	199.9	11.51	0.848	997.4	1.55138	2.857E+01
		406-IA(-)			199.9	11.51	0.848	997.4	1.55138	2.857E+01
420	0	37-UP(+)	0	3576254.	357.8	2833.25	-1.614	334.1	0.50748	1.784E-02
		106-IA(-)			357.8	2833.25	-1.614	334.1	0.50748	1.784E-02
421	0	413-B (+)	0	0.	352.7	139.35	0.000	324.6	0.50674	1.802E-02
		417-I (-)			352.7	139.35	0.000	324.6	0.50674	1.802E-02
450	2	450-U (+)	0	73832.	186.0	6.10	1.007	1141.5	1.83899	6.256E+01
		219-S (-)			185.8	5.86	1.008	1141.5	1.84342	6.514E+01
600	0	150-U (+)	0	7102510.	353.1	301.65	-0.085	325.3	0.50698	1.801E-02
		600-IA(-)			353.1	301.65	-0.085	325.3	0.50698	1.801E-02

IP7019175

STREAM PROPERTIES

STRM NO.	STRM TYPE	COMP FRM/TO ID	FLU ID	MASS FLOW (LBM/HR)	TEMP (F)	PRESS (PSIA)	QUAL (HUM) (-)	ENTH (B/LB)	ENTRPY (B/LB-F)	SPEC. VOLUME (FT3/LBM)
608	0	155-U (+)	0	7152508.	357.8	2834.30	-1.616	334.1	0.50748	1.784E-02
		608-I (-)			357.8	2834.30	-1.616	334.1	0.50748	1.784E-02
609	0	608-B (+)	0	404266.	357.8	2834.30	-1.616	334.1	0.50748	1.784E-02
		400-I (-)			357.8	2834.30	-1.616	334.1	0.50748	1.784E-02
610	0	609-B (+)	0	0.	357.8	2834.30	-1.616	334.1	0.50748	1.784E-02
		610-IB(-)			357.8	2834.30	-1.616	334.1	0.50748	1.784E-02
611	0	608-U (+)	0	6748242.	357.8	2834.30	-1.616	334.1	0.50748	1.784E-02
		609-I (-)			357.8	2834.30	-1.616	334.1	0.50748	1.784E-02
612	2	609-U (+)	0	6748242.	357.8	2834.30	-1.616	334.1	0.50748	1.784E-02
		159-I (-)			357.9	2800.15	-1.540	334.1	0.50762	1.784E-02
613	0	610-U (+)	0	5892248.	638.3	641.31	1.149	1310.9	1.54538	9.255E-01
		15-T (-)			638.3	641.31	1.149	1310.9	1.54538	9.255E-01
684	0	3-E (+)	0	574816.	782.6	1107.17	1.292	1372.6	1.54376	6.028E-01
		401-I (-)			782.6	1107.17	1.292	1372.6	1.54376	6.028E-01
777	0	7-U (+)	0	5172502.	629.2	142.18	1.170	1341.3	1.73149	4.473E+00
		127-I (-)			629.2	142.18	1.170	1341.3	1.73149	4.473E+00
781	0	781-U (+)	0	1056300.	95.0	0.82	0.142	211.2	0.38771	5.752E+01
		16-D (-)			95.0	0.82	0.142	211.2	0.38771	5.752E+01
999	2	999-U (+)	0	73574.	168.5	5.80	0.976	1109.8	1.79440	6.251E+01
		319-S (-)			168.1	5.75	0.976	1109.8	1.79529	6.300E+01

(+) INDICATES STREAM START CONNECTION, (-) INDICATES STREAM END CONNECTION.

IP7019176

STREAM TRANSPORT PROPERTIES

STRM NO.	SPEC.HT. (BTU/LBM-F)	VISCOSITY (LBM/FT-HR)	THERM COND (BTU/HR-FT-F)
1	6.550E-01	6.859E-02	4.385E-02
	6.550E-01	6.859E-02	4.385E-02
3	6.382E-01	6.091E-02	3.733E-02
	6.382E-01	6.091E-02	3.733E-02
4	6.298E-01	5.207E-02	3.073E-02
	6.298E-01	5.207E-02	3.073E-02
5	5.367E-01	6.833E-02	3.921E-02
	5.367E-01	6.833E-02	3.921E-02
7	5.225E-01	6.100E-02	3.374E-02
	5.225E-01	6.100E-02	3.374E-02
8	4.950E-01	4.469E-02	2.287E-02
	4.950E-01	4.469E-02	2.287E-02
9	4.897E-01	4.049E-02	2.033E-02
	4.897E-01	4.049E-02	2.033E-02
10	4.882E-01	3.028E-02	1.458E-02
	4.882E-01	3.028E-02	1.458E-02
11	N.A.	8.862E-01	2.254E-02
	N.A.	8.862E-01	2.254E-02
12	N.A.	8.895E-01	2.244E-02
	N.A.	8.895E-01	2.244E-02
13	N.A.	1.565E+00	3.406E-02
	N.A.	1.565E+00	3.406E-02
14	N.A.	1.415E+00	3.457E-02
	N.A.	1.415E+00	3.457E-02
15	5.474E-01	7.312E-02	4.304E-02
	5.474E-01	7.312E-02	4.304E-02

IP7019177

STREAM TRANSPORT PROPERTIES

STRM NO.	SPEC.HT. (BTU/LBM-F)	VISCOSITY (LBM/FT-HR)	THERM COND (BTU/HR-FT-F)
16	N.A.	1.741E+00	3.234E-02
	N.A.	1.741E+00	3.234E-02
17	9.979E-01	1.493E+00	3.655E-01
	9.979E-01	1.493E+00	3.655E-01
18	9.982E-01	1.741E+00	3.594E-01
	9.982E-01	1.741E+00	3.594E-01
19	1.000E+00	9.293E-01	3.833E-01
	1.000E+00	9.293E-01	3.833E-01
20	9.981E-01	1.565E+00	3.635E-01
	9.981E-01	1.565E+00	3.635E-01
21	1.001E+00	9.142E-01	3.833E-01
	1.001E+00	9.142E-01	3.833E-01
22	9.982E-01	1.415E+00	3.675E-01
	9.982E-01	1.415E+00	3.675E-01
23	9.979E-01	1.700E+00	3.604E-01
	9.980E-01	1.732E+00	3.597E-01
24	1.005E+00	7.106E-01	3.910E-01
	1.005E+00	7.106E-01	3.910E-01
25	1.020E+00	4.949E-01	3.961E-01
	1.020E+00	4.949E-01	3.961E-01
26	1.031E+00	4.336E-01	3.952E-01
	1.031E+00	4.332E-01	3.950E-01
27	1.051E+00	3.672E-01	3.903E-01
	1.051E+00	3.672E-01	3.903E-01
28	5.072E-01	5.210E-02	2.762E-02
	5.072E-01	5.210E-02	2.762E-02

IP7019178

STREAM TRANSPORT PROPERTIES

STRM NO.	SPEC.HT. (BTU/LBM-F)	VISCOSITY (LBM/FT-HR)	THERM COND (BTU/HR-FT-F)
30	9.965E-01	1.391E+00	3.690E-01
	9.973E-01	1.384E+00	3.688E-01
31	9.975E-01	1.289E+00	3.715E-01
	9.975E-01	1.289E+00	3.715E-01
32	1.133E+00	2.600E-01	3.637E-01
	1.133E+00	2.600E-01	3.637E-01
33	1.238E+00	2.250E-01	3.356E-01
	1.238E+00	2.250E-01	3.356E-01
34	1.061E+00	3.204E-01	3.885E-01
	1.061E+00	3.204E-01	3.885E-01
35	1.178E+00	2.481E-01	3.523E-01
	1.178E+00	2.481E-01	3.523E-01
36	1.088E+00	3.042E-01	3.787E-01
	1.088E+00	3.042E-01	3.787E-01
37	1.056E+00	3.544E-01	3.889E-01
	1.056E+00	3.544E-01	3.889E-01
38	1.061E+00	3.205E-01	3.885E-01
	1.061E+00	3.205E-01	3.885E-01
39	1.177E+00	2.484E-01	3.525E-01
	1.177E+00	2.484E-01	3.525E-01
40	1.087E+00	3.052E-01	3.791E-01
	1.087E+00	3.052E-01	3.791E-01
41	1.130E+00	2.612E-01	3.644E-01
	1.130E+00	2.611E-01	3.644E-01
42	1.050E+00	3.673E-01	3.907E-01
	1.050E+00	3.673E-01	3.907E-01

IP7019179

STREAM TRANSPORT PROPERTIES

STRM NO.	SPEC.HT. (BTU/LBM-F)	VISCOSITY (LBM/FT-HR)	THERM COND (BTU/HR-FT-F)
43	1.050E+00	3.673E-01	3.907E-01
	1.050E+00	3.673E-01	3.907E-01
44	1.049E+00	3.693E-01	3.909E-01
	1.049E+00	3.693E-01	3.909E-01
45	1.058E+00	3.496E-01	3.881E-01
	1.058E+00	3.496E-01	3.881E-01
46	1.235E+00	2.257E-01	3.363E-01
	1.235E+00	2.257E-01	3.363E-01
47	6.298E-01	5.207E-02	3.073E-02
	6.298E-01	5.207E-02	3.073E-02
48	5.488E-01	5.277E-02	2.913E-02
	5.488E-01	5.277E-02	2.913E-02
49	9.984E-01	1.298E+00	3.708E-01
	9.984E-01	1.298E+00	3.708E-01
50	1.002E+00	8.611E-01	3.852E-01
	1.002E+00	8.611E-01	3.852E-01
51	1.011E+00	6.024E-01	3.941E-01
	1.011E+00	6.024E-01	3.941E-01
52	1.024E+00	4.746E-01	3.957E-01
	1.024E+00	4.746E-01	3.957E-01
54	6.717E-01	7.480E-02	4.962E-02
	6.717E-01	7.480E-02	4.962E-02
55	1.051E+00	3.672E-01	3.903E-01
	1.051E+00	3.672E-01	3.903E-01
56	1.051E+00	3.672E-01	3.903E-01
	1.051E+00	3.672E-01	3.903E-01

IP7019180

STREAM TRANSPORT PROPERTIES

STRM NO.	SPEC.HT. (BTU/LBM-F)	VISCOSITY (LBM/FT-HR)	THERM COND (BTU/HR-FT-F)
57	1.006E+00	7.152E-01	3.905E-01
	1.006E+00	7.152E-01	3.905E-01
58	9.965E-01	1.414E+00	3.684E-01
	9.965E-01	1.414E+00	3.684E-01
59	6.758E-01	7.509E-02	5.004E-02
	6.758E-01	7.509E-02	5.004E-02
60	9.965E-01	1.414E+00	3.684E-01
	9.965E-01	1.414E+00	3.684E-01
61	9.965E-01	1.414E+00	3.684E-01
	9.965E-01	1.414E+00	3.684E-01
62	9.979E-01	1.480E+00	3.658E-01
	9.979E-01	1.480E+00	3.658E-01
63	N.A.	1.415E+00	3.725E-02
	N.A.	1.415E+00	3.725E-02
64	N.A.	1.741E+00	2.909E-02
	N.A.	1.741E+00	2.909E-02
66	6.291E-01	5.212E-02	3.075E-02
	6.291E-01	5.212E-02	3.075E-02
67	5.474E-01	7.312E-02	4.304E-02
	5.474E-01	7.312E-02	4.304E-02
68	5.367E-01	6.832E-02	3.920E-02
	5.367E-01	6.832E-02	3.920E-02
69	N.A.	9.039E-01	3.837E-01
	N.A.	9.039E-01	3.837E-01
70	4.780E-01	2.771E-02	1.299E-02
	4.780E-01	2.771E-02	1.299E-02

IP7019181

STREAM TRANSPORT PROPERTIES

STRM NO.	SPEC.HT. (BTU/LBM-F)	VISCOSITY (LBM/FT-HR)	THERM COND (BTU/HR-FT-F)
71	1.000E+00	9.262E-01	3.833E-01
	1.000E+00	9.262E-01	3.833E-01
72	1.005E+00	7.106E-01	3.910E-01
	1.005E+00	7.106E-01	3.910E-01
73	1.005E+00	7.106E-01	3.910E-01
	1.005E+00	7.106E-01	3.910E-01
74	1.020E+00	4.949E-01	3.961E-01
	1.020E+00	4.949E-01	3.961E-01
75	1.031E+00	4.332E-01	3.950E-01
	1.031E+00	4.332E-01	3.950E-01
76	9.869E-01	1.742E+00	3.652E-01
	9.869E-01	1.742E+00	3.652E-01
77	N.A.	9.005E-01	2.308E-02
	N.A.	9.005E-01	2.308E-02
79	N.A.	8.921E-01	2.269E-02
	N.A.	8.921E-01	2.269E-02
80	N.A.	9.038E-01	2.298E-02
	N.A.	9.142E-01	2.268E-02
81	N.A.	8.954E-01	2.259E-02
	N.A.	9.039E-01	2.234E-02
82	6.717E-01	7.480E-02	4.962E-02
	6.717E-01	7.480E-02	4.962E-02
83	N.A.	7.152E-01	7.597E-02
	N.A.	7.152E-01	7.597E-02
84	N.A.	7.330E-01	7.094E-02
	N.A.	7.330E-01	7.094E-02

IP7019182

STREAM TRANSPORT PROPERTIES

STRM NO.	SPEC.HT. (BTU/LBM-F)	VISCOSITY (LBM/FT-HR)	THERM COND (BTU/HR-FT-F)
85	5.488E-01	5.277E-02	2.913E-02
	5.488E-01	5.277E-02	2.913E-02
86	6.218E-01	5.615E-02	3.332E-02
	6.218E-01	5.615E-02	3.332E-02
87	N.A.	1.741E+00	2.909E-02
	N.A.	1.741E+00	2.909E-02
88	N.A.	1.741E+00	2.909E-02
	N.A.	1.741E+00	2.909E-02
89	N.A.	1.741E+00	2.909E-02
	N.A.	1.741E+00	2.909E-02
90	N.A.	1.741E+00	2.909E-02
	N.A.	1.741E+00	2.909E-02
93	1.178E+00	2.482E-01	3.524E-01
	1.178E+00	2.482E-01	3.524E-01
94	1.111E+00	2.831E-01	3.713E-01
	1.111E+00	2.831E-01	3.713E-01
95	1.072E+00	3.251E-01	3.839E-01
	1.072E+00	3.251E-01	3.839E-01
96	6.298E-01	5.207E-02	3.073E-02
	6.298E-01	5.207E-02	3.073E-02
97	5.073E-01	5.196E-02	2.753E-02
	5.073E-01	5.196E-02	2.753E-02
98	5.073E-01	5.196E-02	2.753E-02
	5.073E-01	5.196E-02	2.753E-02
99	1.051E+00	3.672E-01	3.903E-01
	1.051E+00	3.672E-01	3.903E-01

IP7019183

STREAM TRANSPORT PROPERTIES

STRM NO.	SPEC.HT. (BTU/LBM-F)	VISCOSITY (LBM/FT-HR)	THERM COND (BTU/HR-FT-F)
100	1.057E+00	3.520E-01	3.885E-01
	1.057E+00	3.520E-01	3.885E-01
101	1.050E+00	3.673E-01	3.907E-01
	1.050E+00	3.673E-01	3.907E-01
102	6.231E-01	5.502E-02	3.261E-02
	6.231E-01	5.502E-02	3.261E-02
104	9.965E-01	1.414E+00	3.684E-01
	9.965E-01	1.414E+00	3.684E-01
105	9.979E-01	1.485E+00	3.657E-01
	9.979E-01	1.485E+00	3.657E-01
106	1.035E+00	3.720E-01	3.976E-01
	1.035E+00	3.720E-01	3.976E-01
107	9.990E-01	2.286E+00	3.487E-01
	9.990E-01	2.286E+00	3.487E-01
108	9.990E-01	2.286E+00	3.487E-01
	9.984E-01	2.047E+00	3.531E-01
109	1.057E+00	3.520E-01	3.885E-01
	1.057E+00	3.520E-01	3.885E-01
110	1.057E+00	3.520E-01	3.885E-01
	1.057E+00	3.520E-01	3.885E-01
111	1.057E+00	3.520E-01	3.885E-01
	1.057E+00	3.520E-01	3.885E-01
114	1.237E+00	2.253E-01	3.359E-01
	1.237E+00	2.252E-01	3.358E-01
115	1.235E+00	2.257E-01	3.363E-01
	1.235E+00	2.257E-01	3.363E-01

IP7019184

STREAM TRANSPORT PROPERTIES

STRM NO.	SPEC.HT. (BTU/LBM-F)	VISCOSITY (LBM/FT-HR)	THERM COND (BTU/HR-FT-F)
116	6.758E-01	7.509E-02	5.004E-02
	6.758E-01	7.509E-02	5.004E-02
117	6.758E-01	7.509E-02	5.004E-02
	6.758E-01	7.509E-02	5.004E-02
118	6.717E-01	7.480E-02	4.962E-02
	6.717E-01	7.480E-02	4.962E-02
119	6.758E-01	7.509E-02	5.004E-02
	6.758E-01	7.509E-02	5.004E-02
120	6.550E-01	6.859E-02	4.385E-02
	6.550E-01	6.859E-02	4.385E-02
121	6.298E-01	5.207E-02	3.073E-02
	6.298E-01	5.207E-02	3.073E-02
122	6.717E-01	7.480E-02	4.962E-02
	6.717E-01	7.480E-02	4.962E-02
123	6.298E-01	5.207E-02	3.073E-02
	6.298E-01	5.207E-02	3.073E-02
124	6.298E-01	5.207E-02	3.073E-02
	6.298E-01	5.207E-02	3.073E-02
125	6.717E-01	7.480E-02	4.962E-02
	6.717E-01	7.480E-02	4.962E-02
126	6.291E-01	5.212E-02	3.075E-02
	6.291E-01	5.212E-02	3.075E-02
127	5.072E-01	5.210E-02	2.762E-02
	5.069E-01	5.209E-02	2.760E-02
128	5.072E-01	5.210E-02	2.762E-02
	5.072E-01	5.210E-02	2.762E-02

IP7019185

STREAM TRANSPORT PROPERTIES

STRM NO.	SPEC.HT. (BTU/LBM-F)	VISCOSITY (LBM/FT-HR)	THERM COND (BTU/HR-FT-F)
129	9.990E-01	2.286E+00	3.487E-01
	9.984E-01	2.051E+00	3.530E-01
130	6.298E-01	5.207E-02	3.073E-02
	6.298E-01	5.207E-02	3.073E-02
131	6.717E-01	7.480E-02	4.962E-02
	6.717E-01	7.480E-02	4.962E-02
132	9.986E-01	1.227E+00	3.729E-01
	9.986E-01	1.227E+00	3.729E-01
133	9.973E-01	1.384E+00	3.688E-01
	9.973E-01	1.384E+00	3.688E-01
134	9.973E-01	1.384E+00	3.688E-01
	9.973E-01	1.384E+00	3.688E-01
135	9.982E-01	1.415E+00	3.675E-01
	9.982E-01	1.415E+00	3.675E-01
136	6.298E-01	5.207E-02	3.073E-02
	6.298E-01	5.207E-02	3.073E-02
137	6.298E-01	5.207E-02	3.073E-02
	6.298E-01	5.207E-02	3.073E-02
138	1.000E+00	9.262E-01	3.833E-01
	1.000E+00	9.262E-01	3.833E-01
139	1.005E+00	7.106E-01	3.910E-01
	1.005E+00	7.106E-01	3.910E-01
140	1.020E+00	4.949E-01	3.961E-01
	1.020E+00	4.949E-01	3.961E-01
141	4.807E-01	5.062E-02	2.604E-02
	4.807E-01	5.062E-02	2.604E-02

IP7019186

STREAM TRANSPORT PROPERTIES

STRM NO.	SPEC.HT. (BTU/LBM-F)	VISCOSITY (LBM/FT-HR)	THERM COND (BTU/HR-FT-F)
142	5.073E-01	5.196E-02	2.753E-02
	5.068E-01	5.194E-02	2.750E-02
143	5.073E-01	5.196E-02	2.753E-02
	5.073E-01	5.196E-02	2.753E-02
144	1.000E+00	9.262E-01	3.833E-01
	1.000E+00	9.262E-01	3.833E-01
145	1.002E+00	8.611E-01	3.852E-01
	1.002E+00	8.611E-01	3.852E-01
146	1.002E+00	8.611E-01	3.852E-01
	N.A.	9.039E-01	3.811E-01
147	1.005E+00	7.106E-01	3.910E-01
	1.005E+00	7.106E-01	3.910E-01
148	5.072E-01	5.210E-02	2.762E-02
	5.072E-01	5.210E-02	2.762E-02
149	1.011E+00	6.024E-01	3.941E-01
	1.011E+00	6.024E-01	3.941E-01
150	1.020E+00	4.949E-01	3.961E-01
	1.020E+00	4.949E-01	3.961E-01
151	5.073E-01	5.196E-02	2.753E-02
	5.070E-01	5.195E-02	2.751E-02
152	5.073E-01	5.196E-02	2.753E-02
	5.070E-01	5.195E-02	2.751E-02
153	9.975E-01	1.289E+00	3.715E-01
	9.975E-01	1.289E+00	3.715E-01
154	9.975E-01	1.289E+00	3.715E-01
	9.975E-01	1.289E+00	3.715E-01

IP7019187

STREAM TRANSPORT PROPERTIES

STRM NO.	SPEC.HT. (BTU/LBM-F)	VISCOSITY (LBM/FT-HR)	THERM COND (BTU/HR-FT-F)
155	9.975E-01	1.289E+00	3.715E-01
	9.975E-01	1.289E+00	3.715E-01
156	6.717E-01	7.480E-02	4.962E-02
	6.717E-01	7.480E-02	4.962E-02
157	6.717E-01	7.480E-02	4.962E-02
	6.717E-01	7.480E-02	4.962E-02
158	1.035E+00	3.717E-01	3.974E-01
	1.035E+00	3.717E-01	3.974E-01
159	1.035E+00	3.718E-01	3.975E-01
	1.035E+00	3.717E-01	3.974E-01
160	1.056E+00	3.544E-01	3.889E-01
	1.056E+00	3.544E-01	3.889E-01
161	1.088E+00	3.042E-01	3.787E-01
	1.088E+00	3.042E-01	3.787E-01
162	1.178E+00	2.481E-01	3.523E-01
	1.178E+00	2.481E-01	3.523E-01
163	1.178E+00	2.481E-01	3.523E-01
	1.178E+00	2.481E-01	3.523E-01
164	1.088E+00	3.042E-01	3.787E-01
	1.088E+00	3.042E-01	3.787E-01
165	1.056E+00	3.544E-01	3.889E-01
	1.056E+00	3.544E-01	3.889E-01
166	5.221E-01	6.181E-02	3.427E-02
	5.219E-01	6.180E-02	3.425E-02
167	6.291E-01	5.212E-02	3.075E-02
	6.275E-01	5.208E-02	3.068E-02

IP70191188

STREAM TRANSPORT PROPERTIES

STRM NO.	SPEC.HT. (BTU/LBM-F)	VISCOSITY (LBM/FT-HR)	THERM COND (BTU/HR-FT-F)
168	6.375E-01	6.088E-02	3.728E-02
	6.362E-01	6.082E-02	3.720E-02
169	6.375E-01	6.088E-02	3.728E-02
	6.362E-01	6.082E-02	3.720E-02
170	6.291E-01	5.212E-02	3.075E-02
	6.278E-01	5.208E-02	3.069E-02
171	6.291E-01	5.212E-02	3.075E-02
	6.291E-01	5.212E-02	3.075E-02
172	1.035E+00	3.717E-01	3.974E-01
	1.035E+00	3.717E-01	3.974E-01
173	1.058E+00	3.496E-01	3.881E-01
	1.058E+00	3.496E-01	3.881E-01
174	1.058E+00	3.496E-01	3.881E-01
	1.058E+00	3.496E-01	3.881E-01
175	1.087E+00	3.052E-01	3.791E-01
	1.087E+00	3.052E-01	3.791E-01
176	1.177E+00	2.484E-01	3.525E-01
	1.177E+00	2.484E-01	3.525E-01
177	1.035E+00	3.718E-01	3.975E-01
	1.035E+00	3.718E-01	3.975E-01
178	1.177E+00	2.484E-01	3.525E-01
	1.177E+00	2.484E-01	3.525E-01
179	1.087E+00	3.052E-01	3.791E-01
	1.087E+00	3.052E-01	3.791E-01
180	6.550E-01	6.859E-02	4.385E-02
	6.550E-01	6.859E-02	4.385E-02

IP7019189

STREAM TRANSPORT PROPERTIES

STRM NO.	SPEC.HT. (BTU/LBM-F)	VISCOSITY (LBM/FT-HR)	THERM COND (BTU/HR-FT-F)
181	5.072E-01	5.210E-02	2.762E-02
	5.072E-01	5.210E-02	2.762E-02
182	5.488E-01	5.277E-02	2.913E-02
	5.488E-01	5.277E-02	2.913E-02
183	6.298E-01	5.207E-02	3.073E-02
	6.298E-01	5.207E-02	3.073E-02
184	6.298E-01	5.207E-02	3.073E-02
	6.298E-01	5.207E-02	3.073E-02
186	6.298E-01	5.207E-02	3.073E-02
	6.298E-01	5.207E-02	3.073E-02
187	1.051E+00	3.672E-01	3.903E-01
	1.051E+00	3.672E-01	3.903E-01
191	1.051E+00	3.672E-01	3.903E-01
	1.051E+00	3.672E-01	3.903E-01
192	1.051E+00	3.672E-01	3.903E-01
	1.051E+00	3.672E-01	3.903E-01
193	1.051E+00	3.672E-01	3.903E-01
	1.051E+00	3.672E-01	3.903E-01
194	1.051E+00	3.672E-01	3.903E-01
	1.051E+00	3.672E-01	3.903E-01
196	1.051E+00	3.672E-01	3.903E-01
	1.051E+00	3.672E-01	3.903E-01
197	1.051E+00	3.672E-01	3.903E-01
	1.051E+00	3.672E-01	3.903E-01
199	1.049E+00	3.693E-01	3.909E-01
	1.049E+00	3.693E-01	3.909E-01

IP7019190

STREAM TRANSPORT PROPERTIES

STRM NO.	SPEC.HT. (BTU/LBM-F)	VISCOSITY (LBM/FT-HR)	THERM COND (BTU/HR-FT-F)
200	1.051E+00	3.672E-01	3.903E-01
	1.051E+00	3.672E-01	3.903E-01
201	1.049E+00	3.693E-01	3.909E-01
	1.049E+00	3.693E-01	3.909E-01
202	1.049E+00	3.693E-01	3.909E-01
	1.049E+00	3.693E-01	3.909E-01
203	1.049E+00	3.693E-01	3.909E-01
	1.049E+00	3.693E-01	3.909E-01
204	1.050E+00	3.673E-01	3.907E-01
	1.050E+00	3.673E-01	3.907E-01
205	1.035E+00	3.720E-01	3.976E-01
	1.035E+00	3.720E-01	3.976E-01
207	1.051E+00	3.672E-01	3.903E-01
	1.051E+00	3.672E-01	3.903E-01
208	N.A.	7.330E-01	7.094E-02
	N.A.	7.330E-01	7.094E-02
210	5.398E-01	5.209E-02	2.846E-02
	5.398E-01	5.209E-02	2.846E-02
211	4.807E-01	5.062E-02	2.604E-02
	4.807E-01	5.062E-02	2.604E-02
212	9.982E-01	1.415E+00	3.675E-01
	9.982E-01	1.415E+00	3.675E-01
213	9.965E-01	1.414E+00	3.684E-01
	9.965E-01	1.414E+00	3.684E-01
214	1.000E+00	2.710E+00	3.421E-01
	1.000E+00	2.710E+00	3.421E-01

IP7019191

STREAM TRANSPORT PROPERTIES

STRM NO.	SPEC.HT. (BTU/LBM-F)	VISCOSITY (LBM/FT-HR)	THERM COND (BTU/HR-FT-F)
215	9.981E-01	1.673E+00	3.609E-01
	9.981E-01	1.673E+00	3.609E-01
218	1.011E+00	6.024E-01	3.941E-01
	1.011E+00	6.024E-01	3.941E-01
219	1.024E+00	4.746E-01	3.957E-01
	1.024E+00	4.746E-01	3.957E-01
220	1.024E+00	4.746E-01	3.957E-01
	1.024E+00	4.746E-01	3.957E-01
222	6.758E-01	7.509E-02	5.004E-02
	6.758E-01	7.509E-02	5.004E-02
223	1.051E+00	3.672E-01	3.903E-01
	1.051E+00	3.672E-01	3.903E-01
224	5.221E-01	6.181E-02	3.427E-02
	5.219E-01	6.180E-02	3.425E-02
225	1.000E+00	9.216E-01	3.836E-01
	1.000E+00	9.216E-01	3.836E-01
226	1.001E+00	9.008E-01	3.838E-01
	1.001E+00	9.008E-01	3.838E-01
227	N.A.	7.330E-01	1.144E-01
	N.A.	7.330E-01	1.144E-01
301	N.A.	9.036E-01	3.837E-01
	N.A.	9.036E-01	3.837E-01
302	1.001E+00	9.045E-01	3.837E-01
	1.001E+00	9.045E-01	3.837E-01
303	1.001E+00	9.046E-01	3.837E-01
	1.001E+00	9.046E-01	3.837E-01

IP7019192

STREAM TRANSPORT PROPERTIES

STRM NO.	SPEC.HT. (BTU/LBM-F)	VISCOSITY (LBM/FT-HR)	THERM COND (BTU/HR-FT-F)
305	4.882E-01	3.028E-02	1.458E-02
	4.882E-01	3.028E-02	1.458E-02
306	4.882E-01	3.028E-02	1.458E-02
	4.882E-01	3.028E-02	1.458E-02
307	4.882E-01	3.028E-02	1.458E-02
	4.882E-01	3.028E-02	1.458E-02
319	1.000E+00	9.310E-01	3.832E-01
	1.000E+00	9.310E-01	3.832E-01
321	1.001E+00	9.062E-01	3.836E-01
	1.001E+00	9.062E-01	3.836E-01
334	1.000E+00	9.273E-01	3.834E-01
	1.000E+00	9.262E-01	3.833E-01
401	6.375E-01	6.088E-02	3.728E-02
	6.375E-01	6.088E-02	3.728E-02
402	6.291E-01	5.212E-02	3.075E-02
	6.291E-01	5.212E-02	3.075E-02
403	5.221E-01	6.181E-02	3.427E-02
	5.221E-01	6.181E-02	3.427E-02
404	4.936E-01	4.605E-02	2.364E-02
	4.934E-01	4.604E-02	2.363E-02
405	4.885E-01	4.104E-02	2.063E-02
	4.878E-01	4.103E-02	2.061E-02
406	4.812E-01	3.141E-02	1.513E-02
	4.801E-01	3.140E-02	1.511E-02
407	6.375E-01	6.088E-02	3.728E-02
	6.375E-01	6.088E-02	3.728E-02

IP70191193

STREAM TRANSPORT PROPERTIES

STRM NO.	SPEC.HT. (BTU/LBM-F)	VISCOSITY (LBM/FT-HR)	THERM COND (BTU/HR-FT-F)
408	6.291E-01	5.212E-02	3.075E-02
	6.291E-01	5.212E-02	3.075E-02
409	5.221E-01	6.181E-02	3.427E-02
	5.221E-01	6.181E-02	3.427E-02
411	5.221E-01	6.181E-02	3.427E-02
	5.221E-01	6.181E-02	3.427E-02
413	1.051E+00	3.672E-01	3.903E-01
	1.051E+00	3.672E-01	3.903E-01
414	N.A.	7.330E-01	7.094E-02
	N.A.	7.330E-01	7.094E-02
416	1.051E+00	3.672E-01	3.903E-01
	1.051E+00	3.672E-01	3.903E-01
417	N.A.	7.330E-01	7.094E-02
	N.A.	7.330E-01	7.094E-02
418	1.051E+00	3.672E-01	3.903E-01
	1.051E+00	3.672E-01	3.903E-01
419	N.A.	7.330E-01	7.094E-02
	N.A.	7.330E-01	7.094E-02
420	9.878E-01	1.423E+00	3.732E-01
	9.878E-01	1.423E+00	3.732E-01
421	1.051E+00	3.672E-01	3.903E-01
	1.051E+00	3.672E-01	3.903E-01
450	4.728E-01	2.854E-02	1.343E-02
	4.718E-01	2.853E-02	1.342E-02
600	1.050E+00	3.673E-01	3.907E-01
	1.050E+00	3.673E-01	3.907E-01

IP7019194

STREAM TRANSPORT PROPERTIES

STRM NO.	SPEC.HT. (BTU/LBM-F)	VISCOSITY (LBM/FT-HR)	THERM COND (BTU/HR-FT-F)
608	1.035E+00	3.720E-01	3.976E-01
	1.035E+00	3.720E-01	3.976E-01
609	1.035E+00	3.720E-01	3.976E-01
	1.035E+00	3.720E-01	3.976E-01
610	1.035E+00	3.720E-01	3.976E-01
	1.035E+00	3.720E-01	3.976E-01
611	1.035E+00	3.720E-01	3.976E-01
	1.035E+00	3.720E-01	3.976E-01
612	1.035E+00	3.720E-01	3.976E-01
	1.035E+00	3.718E-01	3.975E-01
613	6.291E-01	5.212E-02	3.075E-02
	6.291E-01	5.212E-02	3.075E-02
684	6.375E-01	6.088E-02	3.728E-02
	6.375E-01	6.088E-02	3.728E-02
777	5.072E-01	5.210E-02	2.762E-02
	5.072E-01	5.210E-02	2.762E-02
781	N.A.	1.740E+00	3.097E-01
	N.A.	1.740E+00	3.097E-01
999	N.A.	9.039E-01	2.172E-02
	N.A.	9.062E-01	2.165E-02

IP7019195

PROPERTIES FOR ACTIVE STREAMS

STRM	STRM TYPE	FROM /TO	FLU ID	MASS FLOW (LBM/HR)	TEMP (F)	PRESS (PSIA)	QUALITY (R HUM) (-)	ENTHALPY (B/LB)	PDRP/P (-)
23	2	16-T	0	95771455.	97.1	50.0	-0.2001	65.3	0.000
		18-T			95.4	50.0	-0.2020	63.6	
26	2	22-T	0	5414641.	306.8	185.4	-0.0846	276.9	0.269
		75-IA			306.9	135.6	-0.0522	276.9	
30	2	30-T	0	5414641.	116.7	434.8	-0.4504	85.9	0.457
		133-I			117.3	236.1	-0.3431	85.9	
32	2	26-T	0	3374121.	492.5	2747.1	-0.9510	478.9	0.002
		28-T			492.4	2741.3	-0.9433	478.9	
34	2	24-T	0	3374121.	408.2	2773.2	-1.3041	386.9	0.004
		26-T			408.2	2762.7	-1.2858	386.8	
38	2	25-T	0	3374121.	408.1	2773.2	-1.3044	386.8	0.004
		27-T			408.1	2762.7	-1.2861	386.7	
41	2	27-T	0	3374121.	490.6	2747.1	-0.9583	476.7	0.002
		29-T			490.5	2741.3	-0.9505	476.7	
50	2	20-D	0	708002.	175.3	13.3	-0.0327	143.4	0.215
		139-I			175.3	10.5	-0.0204	143.4	
67	2	67-U	0	5894758.	1000.0	598.3	1.4288	1518.0	0.000
		5-I			1000.0	598.3	1.4288	1518.0	
80	2	46-E	0	74244.	168.5	5.8	0.9730	1106.4	0.036
		19-S			166.9	5.6	0.9737	1106.4	
81	2	47-E	0	68698.	169.8	6.0	0.9742	1108.1	0.030
		999-IA			168.5	5.8	0.9747	1108.1	
108	2	61-U	0	95771455.	72.3	50.0	-0.2269	40.5	0.000
		16-T			81.0	50.0	-0.2175	49.2	
114	2	114-U	0	6748242.	555.5	2725.6	-0.6786	553.2	0.008
		64-I			555.4	2704.9	-0.6575	553.2	

IP7019196

PROPERTIES FOR ACTIVE STREAMS

STRM	STRM TYPE	FROM /TO	FLU ID	MASS FLOW (LBM/HR)	TEMP (F)	PRESS (PSIA)	QUALITY (R HUM) (-)	ENTHALPY (B/LB)	PDRP/P (-)
129	2	61-B	0	47878545.	72.3	50.0	-0.2269	40.5	0.000
		17-T			80.9	50.0	-0.2176	49.1	
142	2	142-U	0	233723.	626.6	142.2	1.1687	1340.0	0.020
		23-S			626.2	139.3	1.1688	1340.0	
146	2	139-U	0	708002.	175.3	10.5	-0.0204	143.4	0.446
		65-I			168.5	5.8	0.0068	143.4	
151	2	142-B	0	131524.	626.6	142.2	1.1687	1340.0	0.010
		38-IT			626.4	140.7	1.1688	1340.0	
152	2	143-B	0	126271.	626.6	142.2	1.1687	1340.0	0.010
		37-IT			626.4	140.7	1.1688	1340.0	
159	2	159-U	0	6748242.	357.9	2800.1	-1.5401	334.1	0.004
		158-I			357.8	2788.9	-1.5167	334.1	
166	2	166-U	0	132489.	800.8	267.5	1.2693	1423.1	0.008
		24-S			800.6	265.4	1.2692	1423.1	
167	2	167-U	0	309493.	638.3	641.3	1.1490	1310.9	0.011
		26-S			637.4	634.1	1.1485	1310.9	
168	2	168-U	0	286422.	782.6	1107.2	1.2927	1372.6	0.010
		28-S			781.7	1096.5	1.2911	1372.6	
169	2	168-B	0	288394.	782.6	1107.2	1.2927	1372.6	0.009
		29-S			781.8	1097.1	1.2912	1372.6	
170	2	167-B	0	301057.	638.3	641.3	1.1490	1310.9	0.009
		27-S			637.5	635.2	1.1485	1310.9	
224	2	166-B	0	136290.	800.8	267.5	1.2693	1423.1	0.009
		25-S			800.6	265.1	1.2692	1423.1	
334	2	334-U	0	5414641.	165.1	236.1	-0.2855	133.7	0.215
		71-IA			165.3	185.4	-0.2534	133.7	

IP7019197

PROPERTIES FOR ACTIVE STREAMS

STRM	STRM TYPE	FROM /TO	FLU ID	MASS FLOW (LBM/HR)	TEMP (F)	PRESS (PSIA)	QUALITY (R HUM) (-)	ENTHALPY (B/LB)	PDRP/P (-)
405	2	9-E	0	357399.	429.4	46.0	1.0835	1250.1	0.027
		21-S			429.0	44.7	1.0840	1250.1	
406	2	10-E	0	180951.	246.0	13.9	1.0185	1167.2	0.039
		20-S			245.7	13.3	1.0193	1167.2	
450	2	450-U	0	73832.	186.0	6.1	1.0073	1141.5	0.040
		219-S			185.8	5.9	1.0080	1141.5	
612	2	609-U	0	6748242.	357.8	2834.3	-1.6168	334.1	0.012
		159-I			357.9	2800.1	-1.5401	334.1	
999	2	999-U	0	73574.	168.5	5.8	0.9764	1109.8	0.008
		319-S			168.1	5.7	0.9766	1109.8	

(+) INDICATES STREAM START CONNECTION, (-) INDICATES STREAM END CONNECTION.

IP7019198

COMPARISON OF COMPONENT PORT TEST DATA WITH PEPSE EMPLOYED STREAM PROPERTIES

STREAM NUMBER	STRM TYPE	PEPSE/ TEST	STREAM START/ END	TEMPERATURE (F)	THERMO PRESSURE (PSIA)	QUALITY (-)
15	0	PEPSE	START	1000.0		
		TEST	START	1000.0		
57	0	PEPSE	START			0.000
		TEST	START			0.000

IP7019199

DETAILED TURBINE PERFORMANCE TABLE A

COMPONENT	NUM FLOW ENDS	STAGE GRP EFFCY (-)	MECH POWER (MW)	BOWL FLOW COEFF (*)	SHELL FLOW COEFF (*)	EXTRACT STEAM EXTRACTION (L B M / H R)	FLOW LIQUID REMOVED
1/GENL	1	0.87440	7.93091E+01	84146.	111688.	0.	0.
3/	1	0.91408	1.04851E+02	111688.	151189.	574816.	0.
4/	1	0.97302	1.18963E+02	151189.	N.A.	0.	0.
	SECTION POWER 3.03123E+02						
	SECTION EFFICIENCY AT LOAD = 0.93621 (RE THROTTLE INLET = 0.91942)						
5/	2	0.84444	7.00169E+01	286655.	381433.	0.	0.
6/	2	0.92394	1.06589E+02	381388.	562022.	235824.	0.
					+ TIP LKG	32955.	
7/	2	0.92199	1.22719E+02	562022.	N.A.	470636.	0.
	SECTION POWER 2.99325E+02						
	SECTION EFFICIENCY AT LOAD = 0.91532						
8/	6	0.83052	9.19492E+01	920978.	1636037.	136402.	0.
					+ TIP LKG	33250.	
9/	6	0.82727	5.06938E+01	1636037.	2249965.	307292.	0.
					+ TIP LKG	50107.	
10/	6	0.89214	1.20265E+02	2249965.	2118573.	158804.	0.
					+ TIP LKG	22147.	
46/	2	0.81987	2.17340E+01	2118573.	4574689.	74244.	0.
13/	2	0.64991	2.75067E+01	4574689.	N.A.	0.	0.
	SECTION POWER 3.12148E+02						
	SECTION EFFICIENCY AT LOAD = 0.81844						
47/	2	0.81824	2.09763E+01	2117938.	4462408.	68698.	0.
12/	2	0.57290	2.87320E+01	4462408.	N.A.	0.	0.
	SECTION POWER 4.97083E+01						
	SECTION EFFICIENCY AT LOAD = 0.78702						
11/	2	0.82341	2.06037E+01	2117938.	4389503.	63255.	0.
14/	2	0.72250	2.68848E+01	4389503.	N.A.	0.	0.
	SECTION POWER 4.74885E+01						
	SECTION EFFICIENCY AT LOAD = 0.84226						
37/STPM	1	0.86181	1.12204E+01	4389503.	N.A.	N.A.	N.A.
38/	1	0.75951	1.12297E+01	4389503.	N.A.	N.A.	N.A.

IP7019200

DETAILED TURBINE PERFORMANCE TABLE B

COMPONENT	STG GROUP BOWL FLOW (LBM/HR)	PRESSURE BOWL (PSIA)	PRESSURE SHELL (PSIA)	ENTHALPY BOWL (BTU/LBM)	ENTHALPY SHELL (BTU/LBM)	ENTROPY BOWL (BTU/LB-F)	ENTROPY SHELL (BTU/LB-F)	PRESS RATIO (-)	EXTR PRESS DROP (-)	MOIST REMOV EFFCT (-)
1/GENL	7104351.	2345.97	1710.97	1461.2	1423.1	1.535	1.539	1.37	.00	N.A.
3/	7087192.	1710.97	1112.73	1423.1	1372.6	1.539	1.543	1.54	.00	N.A.
4/	6512376.	1112.73	641.31	1372.6	1310.3	1.543	1.545	1.74	.00	N.A.
5/	5894758.	598.34	435.79	1518.0	1477.5	1.716	1.722	1.37	.00	N.A.
6/	5911917.	435.79	270.53	1477.4	1415.5	1.722	1.726	1.61	.01	N.A.
7/	5643138.	270.53	142.18	1415.5	1341.3	1.726	1.731	1.90	.00	N.A.
8/	5166089.	140.55	71.55	1341.3	1280.2	1.733	1.746	1.96	.01	N.A.
9/	4996437.	71.55	46.61	1280.2	1245.2	1.746	1.754	1.54	.01	N.A.
10/	4639037.	46.61	14.06	1245.2	1156.3	1.754	1.770	3.32	.01	N.A.
46/	1486326.	14.06	5.87	1156.3	1106.4	1.770	1.788	2.40	.01	N.A.
13/	1412082.	5.87	1.10	1106.4	1040.0	1.788	1.851	5.33	.00	N.A.
47/	1485880.	14.06	6.05	1156.3	1108.1	1.770	1.787	2.33	.01	N.A.
12/	1417183.	6.05	0.82	1108.1	1039.0	1.787	1.880	7.42	.00	N.A.
11/	1485880.	14.06	6.18	1156.3	1109.0	1.770	1.786	2.28	.01	N.A.
14/	1422625.	6.18	1.47	1109.0	1044.5	1.786	1.829	4.21	.00	N.A.
37/STPM	126271.	140.74	1.47	1340.0	1036.8	1.731	1.816	96.	N.A.	N.A.
38/	131524.	140.74	0.82	1340.0	1048.6	1.731	1.898	173.	N.A.	N.A.

DETAILED TURBINE PERFORMANCE TABLE C

BASE END POINT PRESSURE IS 1.500 IN.HG

COMP NUMB	ANNULUS VELOCITY ACTUAL (FT/SEC)	ANNULUS VELOCITY SONIC (FT/SEC)	EFFICIENCY AT BASE END PRESSURE (-)	EXHAUST LOSS DRY (BTU/LBM)	EXHAUST LOSS MOIST CORR'D (BTU/LBM)	ENERGY END POINTS ELEP BASE P (B T U / L B M)	ENERGY END POINTS ELEP COND P (B T U / L B M)	ENERGY END POINTS ELEP CHOK P (B T U / L B M)	CHOKE PRESS (PSIA)

IP7019201

DETAILED TURBINE PERFORMANCE TABLE E
LEAKAGES OF INLET FLOWS

COMPONENT	LEAKAGE TO EXTRACTION (LBM/HR)
6/GENL	3.29546E+04
8/GENL	3.32501E+04
9/GENL	5.01073E+04
10/GENL	2.21467E+04

IP7019202

DETAILED FEEDWATER HEATER PERFORMANCE OUTPUT - TABLE A
(EXTRACTION FLOW UPDATING BEGINS AT ITERATION 3)

HTR NO.	COMP NO.	COMPONENT DESCRIPTION	HEAT TRANSFER/DEG* CONDENSING SECTION	SUBCOOL/MX SECTION	HEAT# EX PERF INDEX	TERM TEMP DIFF (TTD)	DRAIN COOL DIFF (DCA)	FW OR TUBE PRESS DROP	UPD INT/ (RELAXN) DEMAND REFERENCE
			(B T U / H R - F)		(-)	(F)	(F)	(PSIA)	(-)
1	19	STD. FW. HEATER	5.41E+06	0.00E+00	0.96	2.09	N.A.	0.0	1(0.75) 46
2	20	FWHT. BACK-DRAIN	4.76E+06	1.85E+06	0.97	1.89	10.1	0.0	1(0.75) 10
3	21	FWHT. BACK-DRAIN	3.50E+06	5.18E+05	0.96	-1.01	29.1	0.0	1(0.75) 9
4	22	FWHT. BACK-DRAIN	1.89E+06	0.00E+00	0.99	-3.65	9.4	0.0	1(0.75) 8
5	23	CONTACT HEATER	N.A.	N.A.	0.76	0.00	N.A.	-3.7	1(0.75) 7
6	24	FW. W/DESUP+COOL	9.17E+05	2.34E+06	0.97	-1.95	6.1	15.6	1(0.75) 6
7	25	FW. W/DESUP+COOL	9.34E+05	1.68E+06	0.96	-1.96	10.4	15.6	1(0.75)166
8	26	FW. W/DESUP+COOL	2.51E+06	1.81E+06	0.98	-0.23	8.8	15.7	1(0.75)126
9	27	FW. W/DESUP+COOL	2.42E+06	1.90E+06	0.98	1.86	7.6	15.7	1(0.75)167
10	28	FW. W/DESUP+COOL	1.80E+06	0.00E+00	0.99	-0.18	7.5	15.7	1(0.75) 3
11	29	FW. W/DESUP+COOL	1.79E+06	0.00E+00	0.99	1.16	8.8	15.7	1(0.75)168
12	219	STD. FW. HEATER	2.44E+06	0.00E+00	0.96	2.99	N.A.	0.0	1(0.75) 11
13	319	STD. FW. HEATER	4.50E+06	0.00E+00	0.96	3.56	N.A.	0.0	1(0.75) 47
A	16	STD. CONDENSER	0.00E+00	1.20E+07	1.15	-2.19	N.A.	0.0	N.A.
B	17	STD. CONDENSER	0.00E+00	0.00E+00	1.19	-4.57	N.A.	0.0	N.A.
C	18	STD. CONDENSER	1.36E+08	3.24E+06	0.93	4.53	N.A.	0.0	N.A.

* HEAT TRANSFER/DEG IS SIMILAR TO UA. SEE VOL 1 OUTPUT DESCRIPTION.
\# PERFORMANCE INDEX IS SIMILAR TO EFFECTIVENESS. SEE VOL 1 OUTPUT DESCRIPTION.

IP7019203

DETAILED FEEDWATER HEATER PERFORMANCE OUTPUT - TABLE B

HTR NO.	COMP NO.	COMPONENT DESCRIPTION	HEAT XFER TO FW OR TUBE CND (BTU/HR)	ENTHALPY RISE FW.OR CND T (BTU/LBM)	ENTHALPY DROP EXT STEAM (BTU/LBM)	MASS FLOWS TO HEATER SHELL (LBM/HR)	MASS FLOWS RATE HEATER DRAIN IN (LBM/HR)	MASS FLOWS RATE THRU TUBES (LBM/HR)
1	19	STD. FW. HEATER	7.21E+07	40.0	971.5	74244.	0.	1805241.
2	20	FWHT. BACK-DRAIN	2.17E+08	40.0	1023.8	180951.	527052.	5414641.
3	21	FWHT. BACK-DRAIN	3.83E+08	70.7	1047.4	357399.	169652.	5414641.
4	22	FWHT. BACK-DRAIN	1.76E+08	32.5	1038.4	169652.	0.	5414641.
5	23	CONTACT HEATER	2.58E+08	47.7	1015.4	233723.	1454146.	5414641.
6	24	FW. W/DESUP+COOL	1.78E+08	52.8	1086.4	132489.	595915.	3374121.
7	25	FW. W/DESUP+COOL	1.78E+08	52.7	1081.9	136290.	589451.	3374121.
8	26	FW. W/DESUP+COOL	3.11E+08	92.1	917.0	309493.	286422.	3374121.
9	27	FW. W/DESUP+COOL	3.04E+08	90.0	918.3	301057.	288395.	3374121.
10	28	FW. W/DESUP+COOL	2.53E+08	75.1	885.0	286422.	0.	3374121.
11	29	FW. W/DESUP+COOL	2.55E+08	75.7	885.7	288394.	0.	3374121.
12	219	STD. FW. HEATER	7.42E+07	41.1	1004.5	73832.	0.	1804700.
13	319	STD. FW. HEATER	7.16E+07	39.7	973.7	73574.	0.	1804700.
A	16	STD. CONDENSER	1.54E+09	16.1	976.0	1417183.	1056300.	95771455.
B	17	STD. CONDENSER	1.37E+09	28.5	967.0	1412082.	0.	47878545.
C	18	STD. CONDENSER	1.43E+09	14.9	961.6	1422625.	4042015.	95771455.

IP7019204

DETAILED HEAT EXCHANGER PERFORMANCE OUTPUT

COMPONENT NUMBER	COMPONENT DESCRIPTION	HEAT EXCH SHELL LOSSES (BTU/HR)	HEAT TO TUBE SIDE FLUID (BTU/HR)	HEAT EXCH PERF INDEX# (-)	PRESSURE DROP TUBE (P S I)	PRESSURE DROP SHELL (P S I)
15	FOSSIL REHEATER	0.0000	1.2208E+09	N.A.	42.968	N.A.
30	GEN. HT. EXCH.	0.0000	8.9796E+06	0.9288	0.000	287.420
31	EXT. DRAIN COOL.	0.0000	4.0974E+07	0.8671	0.000	0.000
32	SPEC. HT. EXCH.	0.0000	0.0000E+00	N.A.	0.000	N.A.
33	SPEC. HT. EXCH.	0.0000	0.0000E+00	N.A.	0.000	N.A.

PERFORMANCE INDEX IS SIMILAR TO EFFECTIVENESS. SEE VOL 1 OUTPUT DESCRIPTION.

IP7019205

DETAILED SOURCE, SINK, AND VALVE PERFORMANCE OUTPUT

COMP NO.	COMPONENT DESCRIPTION	FLOW (LBM/HR)	PRESSURE (PSIA)	TEMP/ QUALITY (F/-)	PRESS. DROP (PSI)	PRESS. DROP FRAC. (-)	POSITION (-)
39	THROTTLE VALVE	7134261.	N.A.	N.A.	66.23	0.02746	OPEN
59	INPUT COMPONENT	7134261.	2412.2	1000.0	N.A.	N.A.	N.A.
60	INFINITE SOURCE	143650000.	50.0	72.3	N.A.	N.A.	N.A.
63	INFINITE SINK	143650000.	50.0	110.1	N.A.	N.A.	N.A.
64	OUTPUT COMPONENT	6748242.	2704.9	555.4	N.A.	N.A.	N.A.
176	INFINITE SOURCE	18247.	15.0	60.0	N.A.	N.A.	N.A.
400	INFINITE SINK	404266.	2834.3	357.8	N.A.	N.A.	N.A.
416	INFINITE SINK	0.	139.3	352.7	N.A.	N.A.	N.A.
417	INFINITE SINK	0.	139.3	352.7	N.A.	N.A.	N.A.

DETAILED THROTTLE VALVE PERFORMANCE OUTPUT

THROTTLE FLOW RATIO

COMPONENT NUMBER	EQUIVALENT (-)	ACTUAL (-)	FIRST ADMISSION (-)
39	1.033955	1.033951	1.000000

IP7019206

DETAILED PUMP/COMPRESSOR PERFORMANCE OUTPUT

COMP NO.	COMPONENT DESCRIPTION	PUMP/COMP EFFICIENCY (-)	LINKAGE/ DRIVER EFFIC (-)	PRESSURE RISE (PSI)	ENTH RISE (BTU/LBM)	DRIVER POWER (KW)	GLAND/SEAL LOSSES (BTU/HR)
34	STD. ELE. PUMP	0.7729	1.0000 0.9500	162.31	0.70	7.6688E+02	0.0000
35	STD. ELE. PUMP	0.7729	1.0000 0.9500	162.31	0.70	7.6688E+02	0.0000
37	STM. DRIVEN PUMP	0.8000	0.9800 0.8618	2531.60	10.49	1.1220E+04	0.0000
38	STM. DRIVEN PUMP	0.8000	0.9800 0.7595	2533.70	10.50	1.1230E+04	0.0000
42	STD. ELE. PUMP	1.0000	1.0000 0.9500	433.35	1.30	1.0933E+03	0.0000
43	STD. ELE. PUMP	1.0000	1.0000 0.9500	433.35	1.30	1.0933E+03	0.0000

IP7019207

PERFORMANCE SUMMARY OF GENERATORS

TURBINE CYCLE GENERATOR NUMBER

	1	2	3	4	5	TOTALS
GR. WHEEL POW,BTU/HR	3.452E+09					3.452E+09
AUX. TURB SHAFT LOAD,BTU/HR	0.000E+00					0.000E+00
NET TURB WHEEL POW (GEN W/O LOSSES) BTU/HR	3.452E+09					3.452E+09
GEN. POWER W/O LOSSES, MWE	1011.793					1011.793
GEAR BOX LOSSES, MWE	0.000					0.000
GEAR BOX OUTPUT POWER, MWE	N.A.					N.A.
GEN. MECHANICAL LOSSES, MWE	4.528					4.528
GEN. ELECTRICAL LOSSES, MWE	10.229					10.229
GEN. TOTAL LOSSES, MWE	14.757					14.757
GEN. + GEAR BOX LOSSES, MWE	14.757					14.757
GROSS GENERATOR POWER, MWE	997.036					997.036

IP7019208

FIRST LAW OF THERMODYNAMICS PERFORMANCE - ENVELOPE 1

TERM

HEAT SUPPLIED (ALL UNITS ARE BTU/HR) -

	MAKEUP HEATS BY FLOW ## INTO THE ENVELOPE		
1	AT SOURCE/SINK COMPONENT, USER ID 60	-1.51451E+11	
2	AT SOURCE/SINK COMPONENT, USER ID 176	-1.94645E+07	
3	AT SOURCE/SINK COMPONENT, USER ID 59	2.61392E+09	
	LETDOWN HEATS BY FLOW ## FROM THE ENVELOPE		
4	AT SOURCE/SINK COMPONENT, USER ID 63	-1.46039E+11	
5	AT SOURCE/SINK COMPONENT, USER ID 417	0.00000E+00	
6	AT SOURCE/SINK COMPONENT, USER ID 416	0.00000E+00	
7	AT SOURCE/SINK COMPONENT, USER ID 400	-3.07524E+08	
8	AT SOURCE/SINK COMPONENT, USER ID 64	-3.65515E+09	
9	NET HEAT TO ENVELOPE BY FLOW		1.14507E+09
10	CONDENSER COOLING LOAD CREDIT (HEAT IN)	4.33524E+09	
11	FURNACE UNACCOUNTED HEAT LOSSES	0.00000E+00	
12	BOILER REHEAT (TYPE 25 COMPONENTS)	1.22076E+09	
13	UNSPECIFIED HEAT EXCHANGERS (HEAT IN)	0.00000E+00	
14	COMPONENT VESSEL LOSSES	0.00000E+00	
15	PIPE HEAT AND ELEVATION LOSSES	-1.07686E+09	
16	PUMP/COMP/FAN INEFFICIENCY LOSSES	2.16677E+06	
17	PUMP GLANDS AND SEALS LOSSES	0.00000E+00	
18	GENERATOR HYD AND OIL COOLER (HEAT IN)	0.00000E+00	
19	HEAT IN AS ELECTRIC PUMP/COMP/FAN POWER	1.26944E+07	
20	NET POWER SUPPLIED		7.78846E+09

POWER OUT (ALL UNITS ARE MWE) -

21	NET TURBINE WHEEL POWER TO GENERATORS	1.01179E+03	
22	APPORTIONED GENERATOR MECHANICAL LOSSES	4.52800E+00	
23	APPORTIONED GENERATOR ELECTRICAL LOSSES	1.02286E+01	
24	GROSS GENERATOR POWER		9.97036E+02
25	ELECTRIC POWER USED FOR PUMP/COMP/FAN	3.72035E+00	
26	APP HOUSE LOAD EXC ELEC PUMP/COMP/FAN	0.00000E+00	
27	NET GENERATOR POWER		9.93316E+02

ENVELOPE PERFORMANCE, EFFICIENCY, - 4.35174E-01

ENVELOPE PERFORMANCE, HEAT RATE, BTU/KW-HR 7.84087E+03

BY DEFAULT, EFFICIENCY IS DEFINED AS (NET GENERATOR POWER / NET POWER SUPPLIED)
BY DEFAULT, HEAT RATE IS DEFINED AS (NET POWER SUPPLIED / NET GENERATOR POWER)

HEAT BY FLOW IS A COMPOSITE TERM, COMPUTED FROM THE EXPRESSION:
FLOW RATE X (ENTHALPY - REFERENCE ENTHALPY + LOWER HEATING VALUE)
THE REFERENCE AND HEATING VALUE TERMS ARE REQUIRED FOR CHEMICALLY REACTING

IP7019209

FIRST LAW OF THERMODYNAMICS PERFORMANCE - SYSTEM

HEAT SUPPLIED (ALL UNITS ARE BTU/HR) -		
BOILER HEAT TO WORKING FLUID	$ 6.26907E+09	
1ST BOILER REHEAT (IN, TYPE 25 COMPONENT)	1.22076E+09	
2ND BOILER REHEAT (IN, TYPE 25 COMPONENT)	0.00000E+00	
UNSPECIFIED HEAT EXCHANGERS (HEAT IN)	0.00000E+00	
GROSS HEAT SUPPLIED	$	7.48983E+09
MAKEUP HEAT (BY FLOW ## IN)	-1.51470E+11	
LETDOWN HEAT (BY FLOW ## OUT)	-1.46346E+11	
CONDENSER COOLING LOAD CREDIT (HEAT IN)	4.33524E+09	
COMPONENT VESSEL LOSSES	0.00000E+00	
PIPE HEAT AND ELEVATION LOSSES	-1.07686E+09	
PUMP/COMP/FAN INEFFICIENCY LOSSES	2.16677E+06	
PUMP GLANDS AND SEALS LOSSES	0.00000E+00	
GENERATOR HYD AND OIL COOLER (HEAT IN)	0.00000E+00	
NET HEAT SUPPLIED		7.77577E+09
HEAT IN AS ELECTRIC PUMP/COMP/FAN POWER	1.26944E+07	
NET POWER SUPPLIED		7.78846E+09

POWER OUT (ALL UNITS ARE MWE) -		
NET TURBINE WHEEL POWER TO GENERATORS	1011.793	
GENERATOR MECHANICAL LOSSES	4.528	
GENERATOR ELECTRICAL LOSSES	10.229	
GROSS GENERATOR POWER		997.036
ELECTRIC POWER USED FOR PUMP/COMP/FAN	3.720	
HOUSE LOAD POWER, EXCLUDING ELEC PUMP/COMP/FAN	0.000	
(EXCEPTION: INCLUDES COOLING TOWER FAN POWER)		
NET GENERATOR POWER		993.316

SYSTEM PERFORMANCE	THERMAL EFF. (-)	HEAT RATE (BTU/KW-HR)
GROSS ACTUAL TURBINE CYCLE		
(GROSS HEAT SUPPLIED / GROSS GENERATOR POWER)	0.45422	$ 7512.
NET ACTUAL TURBINE CYCLE		
(MOD NET POWER SUPPLIED / NET GENERATOR POWER)	0.50483	6759.
TURBINE CYCLE STEAM RATE, LBM/KW-HR		7.1555

NOTE: MOD NET POWER SUPPLIED = NET POWER SUPPLIED + COMPONENT VESSEL LOSSES + PIPE HEAT AND ELEVATION LOSSES + PUMP INEFFICIENCY LOSSES + PUMP GLANDS AND SEALS LOSSES

$ CAUTION INTERPRETING BOILER HEAT AND GROSS HEAT RATE AND EFFICIENCY

IP7019210

CYCLE SUMMARY

GENERATION (MW)		ENERGY SUMMARY (MBTU/HR) *	
Generator 1	997.036	Input Component	2613.918
		Output Component	-3655.152
TOTAL CYCLE	997.036	Steam Reheat	1220.755
		NET SUPPLIED CYCLE	7489.825

HEAT RATE (BTU/KW-HR) **		MISCELLANEOUS	
Cycle	7512	Backpressure (in.hga)	
Steam Turbine	7512	Cond 1	2.24
		Cond 2	1.66
		Cond 3	2.99

* All terms except "Fuel Input (lhv)" calcd using w*(h-href+hvall). The term, Fuel Input (lhv), is w*hvall, where hvall is lower heating value.

** Heat rates are defined as:

Cycle = {Energy In (Input Component) - Energy Out (Output Component) + Steam Reheat Energy} / Total Cycle Generation (After Gen Losses)

Steam Turbine = {Energy In (Input Component) - Energy Out (Output Component) + Steam Reheat Energy} / Steam Turbine Generation (After Gen Losses)

IP7019211

SECOND LAW OF THERMODYNAMICS PERFORMANCE - SYSTEM
(TTDEAD = 5.00000E+01 DEG F)

SUMMARY FOR CYCLE SUBSYSTEMS

SUBSYSTEM	POTENTIAL FOR POWER MAXIMUM (BTU/HR)	POTENTIAL FOR POWER RELATIVE (-)	IRREVERSIBILITY ACTUAL (BTU/HR)	IRREVERSIBILITY RELATIVE (-)	EFFECT-IVENESS (-)
CLASS 0 - TURBINES	3.813008E+09	1.2385	3.606264E+08	-0.9989	0.9054
CLASS 1 - FW HEATERS	1.422349E+08	0.0462	1.422349E+08	-0.3940	0.9031
CLASS 2 - HEAT EXCHANGERS	-8.362580E+08	-0.2716	-8.362580E+08	2.3164	0.5955
CLASS 3 - VALVES ONLY	9.922206E+06	0.0032	9.922206E+06	-0.0275	
CLASS 4 - PUMPS	1.636366E+07	0.0053	2.905802E+07	-0.0805	
CLASS 5 - MIXERS	-3.287149E+07	-0.0107	-3.287149E+07	0.0911	
CLASS 6 - SPLITTERS	3.709612E+06	0.0012	3.709612E+06	-0.0103	
CLASS 7 - MISC COMPONENTS	0.000000E+00	0.0000	0.000000E+00	0.0000	
STREAMS	-3.743233E+07	-0.0122	-3.743233E+07	0.1037	
TOTALS	3.078676E+09	1.0000	-3.610107E+08	1.0000	

CYCLE PERFORMANCE

NET AVAILABILITY INFLUX, BTU/HR	3.211462E+09	
CONSTRUCTIVE ADDITIONS, BTU/HR	-1.327861E+08	
MAXIMUM POTENTIAL POWER, BTU/HR		3.078676E+09
TOTAL IRREVERSIBILITY, BTU/HR	(-3.610107E+08)	
NET CYCLE POWER, BTU/HR		3.439687E+09
FIRST LAW RESULT (NET TURBINE WHEEL POWER LESS ELECTRIC POWER USED FOR PUMP/COMP/FAN), BTU/HR		3.439687E+09
CYCLE EFFECTIVENESS		1.1173

IP7019212

SPECIAL OUTPUT TABLE OF SPECIFIED VARIABLES

INDEX	DESCRIPTION	VARIABLE(ID)	VALUE	UNITS
1	GROSS GENERATOR POWER	BKGROS(0)	997.036	MW
2	HP SECTION EFFICIENCY	OPVB (168)	91.59	Not-Specd
3	IP SECTION EFFICIENCY	OPVB (190)	92.11	Not-Specd
4	THROTTLE FLOW	WW (59)	7134261.	LBM/HR
5	1ST STAGE PRESSURE inlet	PP (118)	2346.0	PSIA
6	new 8TH STAGE SHELL PRESSURE	PP (4)	641.3	PSIA
7	IP INLET PRESSURE	PP (67)	598.3	PSIA
8	14TH STAGE SHELL PRESSURE	PP (777)	142.18	PSIA
9	HP TURB PR RATIO	OPVB (170)	2.67	Not-Specd
10	IP TURB PR RATIO	OPVB (171)	4.21	Not-Specd
132	REHEAT PRESSURE DROP	OPVB (173)	670.0000	Not-Specd
135	BOILER BLOWDOWN FLOW	OPVB (20)	18247.	NO-UNITS
136	CYCLE LOSSES	OPVB (24)	0.	Not-Specd
137	CYCLE MAKEUP FLOW	WW (214)	18247.	LBM/HR
138	FLUE GAS REHEAT FLOW	WW (194)	0.	LBM/HR
139	AIR PREHEAT FLOW	WW (192)	0.	LBM/HR
140	BOILER FEED FLOW	WW (114)	6748242.	LBM/HR
141	SH ATTEMP FLOW	WW (609)	404266.	LBM/HR
142	RH ATTEMP FLOW	WW (610)	0.	LBM/HR
150	NET TURBINE CYCLE HEAT RATE	OPVB (114)	7843.61	Not-Specd
198	H2 PRESSURE	PPGNH2(1)	63.00	PSIA
199	POWER FACTOR	POWFAC(1)	0.90	NO-UNITS

IP7019213

PERFORMANCE TEST ANALYSIS RESULTS (SPECIAL OPTION 6)

CASE	GEN. POWER/ INCREMENT (MW)		HEAT RATE/ INCREMENT (BTU/KW-HR)		CASE TITLE
TEST	949.598		7884.		U2 Test Data Reduction
BENCHMK	973.186		7715.		U2 Design HB FROM ALSTOM
		23.850		129.	
STAND'N	997.036		7844.		U2 Corr Test ALSTOM Test

IP7019214

COMPARISON OF STANDARDIZED RESULTS

STANDARD PARAMETER	BENCHMARK*	CURRENT#	CHANGE	% CHANGE
GENERATION, MW	973.2	997.0	23.85	2.5
HEAT RATE, BTU/KW-HR	7715.	7844.	129.	1.7
THROTTLE FLOW X 10-3, LBM/HR	6900.00	7134.26	234.26	3.4
MAIN STEAM PRESSURE, PSIA	2412.2	2412.2	0.00	0.0
TURBINE STAGE/EXTRACTION PRESSURE, PSIA				
HP TURBINE STAGE GROUP 1-2	1706.6	1711.0	4.33	0.3
HP TURBINE STAGE GROUP 3-5	1095.8	1107.2	11.33	1.0
HP TURBINE STAGE GROUP 6-8	627.8	641.3	13.48	2.1
IP TURBINE 8TH STAGE	415.8	435.8	19.95	4.8
IP TURBINE STAGE GROUP 9-11	259.5	267.5	8.02	3.1
IP TURBINE STAGE GROUP 12-14	139.6	142.2	2.60	1.9
LP TURBINE 15TH STAGE	72.4	70.7	-1.77	-2.4
LP TURBINE 16TH STAGE	44.0	46.0	1.99	4.5
LP TURBINE STAGE GROUP 17-18	12.8	13.9	1.09	8.5
LP TURBINE A 19TH STAGE	5.3	6.1	0.80	15.2
LP TURBINE B 19TH STAGE	5.3	5.8	0.50	9.5
LP TURBINE C 19TH STAGE	5.3	6.0	0.66	12.5
LP TURBINE A 20TH STAGE	1.5	1.5	0.00	0.0
LP TURBINE B 20TH STAGE	1.1	1.1	0.00	0.0
LP TURBINE C 20TH STAGE	0.8	0.8	0.00	0.0
TURBINE SECTION EFFICIENCIES, PERCENT			PERCENTAGE POINT CHNG	
HP TURBINE STAGE GROUP 6-8	94.8	93.6	-1.2	
IP TURBINE STAGE GROUP 12-14	92.1	91.5	-0.6	
LP TURBINE A 20TH STAGE	86.7	84.2	-2.4	
LP TURBINE B 20TH STAGE	84.5	81.8	-2.6	

* BENCHMARK IS
U2 Design HB FROM ALSTOM
\# CURRENT IS
U2 Corr Test ALSTOM Test

IP7019215

```
LISTING OF INPUT DATA FOR CASE  1

*
=
*
000200   1  2  10  4  3
*
*
****************************
*  GENERIC INPUT DATA
****************************
*
*
*
****************************
*  STREAMS
****************************
*
*
*
****************************
*  COMPONENTS
****************************
*
*
*
723190 "FEEDWATER HEATER #1C"
*
* FEEDWATER HEATER #1C
703190   14  0  47  3  0.0  2.
703191   0.0  0.0  0.0  0.0  0.0  0.0
703192   0.0  0.0  0.0  0.0  0.0  0.0  0.0  0  0
703193
703194
703195
703196
703197
703198
713191
713193
713195
713198
703199   0  0  0.75  0.0  0.0  0.1  0.0  0.0  2.  0.0  0  0  0  0.0  0.0  0
713190 0
713197   0
*
722190 "FEEDWATER HEATER #1A"
*
* FEEDWATER HEATER #1A
702190   14  0  11  3  0.0  2.
702191   0.0  0.0  0.0  0.0  0.0  0.0
702192   0.0  0.0  0.0  0.0  0.0  0.0  0.0  0  0
702193
```

IP7019216

```
* FEEDWATER HEATER #1B
700190   14  0  46  3  0.0  2.
700191   0.0  0.0  0.0  0.0  0.0  0.0
700192   0.0  0.0  0.0  0.0  0.0  0.0  0.0  0  0
700193
700194
700195
700196
700197
700198
710191
710193
710195
710198
700199   0  0  0.75  0.0  0.0  0.1  0.0  0.0  2.  0.0  0  0  0  0.0  0.0  0
710190 0
710197   0
*
720220 "FEEDWATER HEATER #4"
*
* FEEDWATER HEATER #4
700220   16  0  8  3  0.0  2.  10.
700221   0.0  0.0  0.0  0.0  0.0  0.0
700222   0.0  0.0  0.0  0.0  0.0  0.0  0.0  0  0
700223
700224
700225
700226
700227
700228
710221
710223
710225
710228
700229   0  0  0.75  0.0  0.0  0.1  0.0  0.0  2.  10.  0  0  0  0.0  0.0  0
710220 0
710227   0
*
720210 "FEEDWATER HEATER #3"
*
* FEEDWATER HEATER #3
700210   16  1  9  3  0.0  2.  10.
700211   0.0  0.0  0.0  0.0  0.0  0.0
700212   0.0  0.0  0.0  0.0  0.0  0.0  0.0  0  0
700213
700214
700215
700216
700217
700218
710211
710213
710215
710218
```

IP7019217

```
700207
700208
710201
710203
710205
710208
700209   0  0  0.75  0.0  0.0  0.1  0.0  0.0  2.  10.  0  0  1  0.0  0.0  0
710200 0
710207   0
*
720290 "FEEDWATER HEATER #8B"
*
* FEEDWATER HEATER #8B
700290   18  0  168  3  0.0  -2.  10.
700291   0.0  0.0  0.0  0.0  0.0  0.0
700292   0.0  0.0  0.0  0.0  0.0  0.0  0.0  0  0
700293
700294
700295
700296
700297
700298
710291
710293
710295
710298
700299   0  0  0.75  0.0  0.0  0.1  0.0  0.0  -2.  10.  0  0  0  0.0  0.0  0
710290 0
710297   0
*
720280 "FEEDWATER HEATER #8A"
*
* FEEDWATER HEATER #8A
700280   18  0  3  3  0.0  -2.  10.
700281   0.0  0.0  0.0  0.0  0.0  0.0
700282   0.0  0.0  0.0  0.0  0.0  0.0  0.0  0  0
700283
700284
700285
700286
700287
700288
710281
710283
710285
710288
700289   0  0  0.75  0.0  0.0  0.1  0.0  0.0  -2.  10.  0  0  0  0.0  0.0  0
710280 0
710287   0
*
720270 "FEEDWATER HEATER #7B"
*
* FEEDWATER HEATER #7B
700270   18  1  167  3  0.0  1  10
```

IP7019218

```
710277   0
*
720260 "FEEDWATER HEATER #7A"
*
* FEEDWATER HEATER #7A
700260   18  1  126  3  0.0  -1.  10.
700261   0.0  0.0  0.0  0.0  0.0  0.0
700262   0.0  0.0  0.0  0.0  0.0  0.0  0.0  0  0
700263
700264
700265
700266
700267
700268
710261
710263
710265
710268
700269   0  0  0.75  0.0  0.0  0.1  0.0  0.0  -1.  10.  0  0  0  0.0  0.0  0
710260 0
710267   0
*
720250 "FEEDWATER HEATER #6B"
*
* FEEDWATER HEATER #6B
700250   18  1  166  3  0.0  -2.  10.
700251   0.0  0.0  0.0  0.0  0.0  0.0
700252   0.0  0.0  0.0  0.0  0.0  0.0  0.0  0  0
700253
700254
700255
700256
700257
700258
710251
710253
710255
710258
700259   0  0  0.75  0.0  0.0  0.1  0.0  0.0  -2.  10.  0  0  0  0.0  0.0  0
710250 0
710257   0
*
720240 "FEEDWATER HEATER #6A"
*
* FEEDWATER HEATER #6A
700240   18  1  6  3  0.0  -2.  10.
700241   0.0  0.0  0.0  0.0  0.0  0.0
700242   0.0  0.0  0.0  0.0  0.0  0.0  0.0  0  0
700243
700244
700245
700246
700247
```

IP7019219

```
*
******************************
*  SPECIAL FEATURES
******************************
*
*
*
*
*
*
*
* BM BLOWDOWN FRAC
870220   0.001
870228
*
* BM FGR FLOW FRACTION
870300   0.0
870308
*
* BM APH FLOW FRAC
870400   0.0
870408
*
* BM SH SPRAY FLOW FRACTION
870500   0.0
870508
*
* BM CYCLE LOSS FRACTION
870600   0.009
870608
*
*
*
*
*
* CALC BM BLOWDOWN
880210    OPVB  22   MUL   WW  59   OPVB  20
880211    0.0  0.0  0.0
880215    0  0  0.0
*
* MAKEUP FLOW CALC
880230    WW  421   ADD   WW  416   OPVB  24
880231    0.0  0.0  0.0
880235    0  0  0.0
*
* BM FGR RETURN TEMP SET
880320    TT  72   EQL   TTTORH  33
880321    0.0  0.0  0.0
880325    0  0  0.0
*
*
******************************
*   SPECIAL OPTIONS
******************************
```

IP7019220

```
*
*********************************************************************
*    SPECIAL OPTION 6 (TEST DATA REDUCTION) UPGRADE CASE CASE  1
*********************************************************************
*
*
= U2 FW HTRS & RH Press Drop to DESIGN Values
850651     0  0  0  0  0
   +     0  0  0  0  0
   +     0  0  0  0  0
   +     0  0  0  0  0
   +     0  0  0  0  0
850652
   +     0  0  0  0  0
   +     0  0  0  0  0
   +     0  0  0  0  0
   +     0  0  0  0  0
   +     0  0  0  0  0
850653
   +     0  0  0  0  0
   +     0  0  0  0  0
   +     0  0  0  0  0
   +     0  0  0  0  0
   +     0  0  0  0  0
850654
   +     0  0  0  0  0
   +     0  0  0  0  0
   +     0  0  0  0  0
   +     0  0  0  0  0
   +     0  0  0  0  0
*
* LAST CASE FLAG FOR SPECIAL OPTION 6
850610  1
.
```

IP7019221

INPUT SCHEDULE NUMBER 1 TABLE OF VALUES

EXHAUST LOSS VS. ANNULUS VELOCITY

UNIVARIATE TABLE OF Y VERSUS X

VALUES OF X

2.350E+02	2.750E+02	3.000E+02	3.200E+02	3.550E+02	3.810E+02	4.080E+02
4.400E+02	4.820E+02	5.050E+02	5.350E+02	5.700E+02	6.000E+02	6.300E+02
6.600E+02	7.000E+02	7.550E+02	8.780E+02	9.550E+02	1.210E+03	

VALUES OF Y

4.750E+01	3.800E+01	3.300E+01	3.000E+01	2.500E+01	2.200E+01	1.900E+01
1.600E+01	1.300E+01	1.180E+01	1.060E+01	1.000E+01	9.800E+00	1.000E+01
1.060E+01	1.180E+01	1.400E+01	2.000E+01	2.400E+01	3.800E+01	

INPUT SCHEDULE NUMBER 4 TABLE OF VALUES

GENERATOR LOSS VS MW

BIVARIATE TABLE OF Y VERSUS X
WITH Z AS A PARAMETER

VALUES OF X

2.500E+05	3.000E+05	3.500E+05	4.000E+05	4.500E+05	5.000E+05	5.500E+05
6.000E+05	6.500E+05	7.000E+05	7.500E+05	8.000E+05	8.500E+05	9.000E+05
9.500E+05	1.000E+06					

VALUES OF Z	VALUES OF Y					
9.000E-01	3.847E+03	4.021E+03	4.229E+03	4.470E+03	4.747E+03	5.058E+03
	5.406E+03	5.791E+03	6.213E+03	6.673E+03	7.171E+03	7.710E+03
	8.288E+03	8.907E+03	9.568E+03	1.027E+04		
9.700E-01	3.792E+03	3.941E+03	4.120E+03	4.327E+03	4.563E+03	4.830E+03
	5.127E+03	5.456E+03	5.816E+03	6.208E+03	6.633E+03	7.092E+03
	7.584E+03	8.111E+03	8.672E+03	9.270E+03		
9.800E-01	3.785E+03	3.931E+03	4.106E+03	4.309E+03	4.540E+03	4.801E+03
	5.092E+03	5.414E+03	5.766E+03	6.150E+03	6.566E+03	7.015E+03
	7.406E+03	8.011E+03	8.561E+03	9.145E+03		

IP7019222

(A) HAS ADDITION AFTER MULTIPLICATION
(B) HAS ADDITION BEFORE MULTIPLICATION

IP7019223

INPUT SCHEDULE NUMBER 14 TABLE OF VALUES

SSR flow over load

UNIVARIATE TABLE OF Y VERSUS X

VALUES OF X

2.172E+06	3.332E+06	4.984E+06	6.726E+06	6.750E+06	6.900E+06

VALUES OF Y

0.000E+00	0.000E+00	4.309E+03	9.414E+03	9.483E+03	9.910E+03

INPUT SCHEDULE NUMBER 15 TABLE OF VALUES

Injection water flow to BFP over load

UNIVARIATE TABLE OF Y VERSUS X

VALUES OF X

2.172E+06	3.332E+06	4.984E+06	6.726E+06	6.750E+06	6.900E+06

VALUES OF Y

2.672E+04	3.252E+04	4.039E+04	4.826E+04	4.841E+04	4.903E+04

* SPCL INIT (YES) - PRIOR TO FIRST ITERATE AT USER OPTION

IP7019224

** SAVE CASE **

DEFINITIONS OF SPECIAL OPERATIONS SPECIFIED
(CALCULATIONS BEGIN AT ITROPS = 2)

OPER-ATION ID	FIRST VARIABLE (ID)	OPERATION	SECOND VARIABLE (ID)	=	RESULT VARIABLE(ID)	INTERVAL/ SPCL INIT*
21	OPVB (22)	MUL	WW (59)	=	OPVB (20)	1/NO
23	WW (421)	ADD	WW (416)	=	OPVB (24)	1/NO
32	TT (72)	EQL		=	TTTORH(33)	1/NO

* SPCL INITIATION (YES) - PRIOR TO FIRST ITERATE AT USER OPTION

IP7019225

** SAVE CASE **

SCHEDULED VARIABLE VALUES CALCULATED

SCHEDULE VARIABLES ID	Y VALUE USED FOR ITERATE 16	X VALUE FROM ITERATE 15	Z VALUE FROM ITERATE 15
1	EXUSLS(12) 4.17154E+01	VEANP (12) 1.27767E+03	
2	EXUSLS(13) 2.48456E+01	VEANP (13) 9.70402E+02	
3	EXUSLS(14) 1.38288E+01	VEANP (14) 7.50719E+02	
6	OPVB (195) 1.00836E+04	BKGROS(0) 9.86720E+02	POWFAC(1) 9.00000E-01
16	WWFIXB(141) 1.05769E+04	WWVSC (59) 7.13426E+06	
17	WWFIXB(44) 4.99983E+04	WWVSC (59) 7.13426E+06	

IP7019226

** SAVE CASE **

OPERATION SET VALUES CALCULATED
AT THE START OF ITERATION 16

OPER-ATION ID	VARIABLE (ID) VALUE	OPERATION	VARIABLE (ID) VALUE	=	VARIABLE (ID) VALUE
1	PP (81) 5.69052E+00	EQL		=	PPSTRU(146) 5.69052E+00
2	PP (-146) 1.02810E+01	PTH	TT (-146) 1.75381E+02	=	OPVB (1) 1.43390E+02
3	PP (81) 5.69052E+00	SHF		=	OPVB (2) 1.35693E+02
4	PP (81) 5.69052E+00	SHG		=	OPVB (3) 1.13296E+03
5	OPVB (1) 1.43390E+02	SUB	OPVB (2) 1.35693E+02	=	OPVB (4) 7.69667E+00
6	OPVB (3) 1.13296E+03	SUB	OPVB (2) 1.35693E+02	=	OPVB (5) 9.97268E+02
7	OPVB (4) 7.69667E+00	DIV	OPVB (5) 9.97268E+02	=	OPVB (6) 7.71776E-03
8	WW (146) 6.54984E+05	MUL	OPVB (6) 7.71776E-03	=	WWFIXB(65) 5.05501E+03
9	OPVB (3) 1.13296E+03	EQL		=	HHFIXB(65) 1.13296E+03
10	WWFIXB(65) 5.05501E+03	BIF	OPVB (8) 0.00000E+00	=	OPVB (7) 1.00000E+00
11	WWFIXB(65) 5.05501E+03	MUL	OPVB (7) 1.00000E+00	=	WWFIXB(65) 5.05501E+03
21	OPVB (22) 1.00000E-03	MUL	WW (59) 7.13426E+06	=	OPVB (20) 7.13426E+03

IP7019227

** SAVE CASE **

OPERATION SET VALUES CALCULATED
AT THE START OF ITERATION 16

OPER-ATION ID	VARIABLE (ID) VALUE	OPERATION	VARIABLE (ID) VALUE	=	VARIABLE (ID) VALUE
23	WW (421) 0.00000E+00	ADD	WW (416) 0.00000E+00	=	OPVB (24) 0.00000E+00
24	OPVB (24) 0.00000E+00	ADD	OPVB (20) 7.13426E+03	=	WWVSC (176) 7.13426E+03
30	OPVB (30) 0.00000E+00	MUL	WW (59) 7.13426E+06	=	WWFIXB(145) 0.00000E+00
32	TT (72) 2.04181E+02	EQL		=	TTTORH(33) 2.04181E+02
40	OPVB (40) 0.00000E+00	MUL	WW (59) 7.13426E+06	=	WWFIXB(144) 0.00000E+00
42	OPVB (41) 7.81904E+01	EQL		=	TTTORH(32) 7.81904E+01
50	OPVB (50) 0.00000E+00	MUL	WW (59) 7.13426E+06	=	WWFIXB(608) 0.00000E+00
60	OPVB (60) 9.00000E-03	MUL	WW (59) 7.13426E+06	=	WWFIXB(415) 6.42083E+04
61	OPVB (61) 0.00000E+00	MUL	WW (59) 7.13426E+06	=	WWFIXB(413) 0.00000E+00
62	OPVB (63) 9.00000E-01	EQL		=	POWFAC(1) 9.00000E-01
100	WW (59) 7.13426E+06	SUB	WW (609) 0.00000E+00	=	OPVB (100) 7.13426E+06
101	HH (59) 1.46121E+03	SUB	HH (114) 5.54897E+02	=	OPVB (101) 9.06310E+02

IP7019228

** SAVE CASE **

OPERATION SET VALUES CALCULATED
AT THE START OF ITERATION 16

OPER-ATION ID	VARIABLE (ID) VALUE	OPERATION	VARIABLE (ID) VALUE	=	VARIABLE (ID) VALUE
102	OPVB (100) 7.13426E+06	MUL	OPVB (101) 9.06310E+02	=	OPVB (102) 6.46585E+09
103	HH (15) 1.51835E+03	SUB	HH (613) 1.30922E+03	=	OPVB (103) 2.09134E+02
104	WW (613) 5.79506E+06	MUL	OPVB (103) 2.09134E+02	=	OPVB (104) 1.21195E+09
105	HH (59) 1.46121E+03	SUB	HH (106) 3.31986E+02	=	OPVB (105) 1.12922E+03
106	WW (609) 0.00000E+00	MUL	OPVB (105) 1.12922E+03	=	OPVB (106) 0.00000E+00
107	PP (114) 2.74797E+03	PTH	OPVB (99) 0.00000E+00	=	OPVB (107) 7.62851E+02
108	OPVB (107) 7.62851E+02	SUB	HH (114) 5.54897E+02	=	OPVB (108) 2.07954E+02
109	OPVB (20) 7.13426E+03	MUL	OPVB (108) 2.07954E+02	=	OPVB (109) 1.48360E+06
110	OPVB (102) 6.46585E+09	ADD	OPVB (104) 1.21195E+09	=	OPVB (110) 7.67780E+09
111	OPVB (106) 0.00000E+00	ADD	OPVB (109) 1.48360E+06	=	OPVB (111) 1.48360E+06
112	OPVB (110) 7.67780E+09	ADD	OPVB (111) 1.48360E+06	=	OPVB (112) 7.67928E+09
113	BKNET (0) 9.83059E+02	MUL	OPVB (10) 1.00000E+03	=	OPVB (113) 9.83059E+05

IP7019229

** SAVE CASE **

OPERATION SET VALUES CALCULATED
AT THE START OF ITERATION 16

OPER-ATION ID	VARIABLE (ID) VALUE	OPERATION	VARIABLE (ID) VALUE	=	VARIABLE (ID) VALUE
114	OPVB (112) 7.67928E+09	DIV	OPVB (113) 9.83059E+05	=	OPVB (114) 7.81162E+03
150	VV (22) 1.61845E-02	MUL	OPVB (150) 1.24680E-01	=	OPVB (151) 2.01789E-03
151	OPVB (151) 2.01789E-03	MUL	WW (22) 5.32427E+06	=	OPVB (152) 1.07438E+04
155	VV (207) 1.79951E-02	MUL	OPVB (150) 1.24680E-01	=	OPVB (156) 2.24363E-03
156	OPVB (156) 2.24363E-03	MUL	WW (207) 7.09140E+06	=	OPVB (157) 1.59104E+04
160	PP (4) 6.30879E+02	PSH	SS (59) 1.53267E+00	=	OPVB (165) 1.29533E+03
161	HH (59) 1.46121E+03	SUB	OPVB (165) 1.29533E+03	=	OPVB (166) 1.65873E+02
162	HH (59) 1.46121E+03	SUB	HH (66) 1.30922E+03	=	OPVB (167) 1.51990E+02
163	M * OPVB (167) 1.00E+00 * 1.52E+02 1.51990E+02	DIV	M * OPVB (166) 1.00E+00 * 1.66E+02 1.65873E+02	=	M * OPVB (168) 1.00E+02 * 9.16E-01 9.16305E+01
170	PP (1) 1.71097E+03	DIV	PP (4) 6.30879E+02	=	OPVB (170) 2.71203E+00
171	PP (67) 5.88610E+02	DIV	PP (777) 1.38509E+02	=	OPVB (171) 4.24963E+00

IP7019230

** SAVE CASE **

OPERATION SET VALUES CALCULATED
AT THE START OF ITERATION 16

OPER-ATION ID	VARIABLE (ID) VALUE	OPERATION	VARIABLE (ID) VALUE	=	VARIABLE (ID) VALUE
172	PP (66) 6.30879E+02	SUB	PP (-15) 5.88610E+02	=	OPVB (172) 4.22689E+01
173	M * OPVB (172) 1.00E+00 * 4.23E+01 4.22689E+01	DIV	M * PP (66) 1.00E+00 * 6.31E+02 6.30879E+02	=	M * OPVB (173) 1.00E+02 * 6.70E-02 6.70000E+00
180	HH (-67) 1.51833E+03	MUL	WW (67) 5.79757E+06	=	OPVB (180) 8.80260E+09
181	HH (180) 1.42311E+03	MUL	WW (180) 1.71589E+04	=	OPVB (181) 2.44191E+07
182	OPVB (180) 8.80260E+09	ADD	OPVB (181) 2.44191E+07	=	OPVB (182) 8.82702E+09
183	WW (67) 5.79757E+06	ADD	WW (180) 1.71589E+04	=	OPVB (183) 5.81473E+06
184	OPVB (182) 8.82702E+09	DIV	OPVB (183) 5.81473E+06	=	OPVB (184) 1.51804E+03
185	PP (-67) 5.88610E+02	PHS	OPVB (184) 1.51804E+03	=	OPVB (185) 1.71801E+00
186	PP (97) 1.38509E+02	PSH	OPVB (185) 1.71801E+00	=	OPVB (186) 1.32382E+03
187	OPVB (184) 1.51804E+03	SUB	OPVB (186) 1.32382E+03	=	OPVB (187) 1.94225E+02
189	OPVB (184) 1.51804E+03	SUB	HH (97) 1.33915E+03	=	OPVB (189) 1.78899E+02

IP7019231

** SAVE CASE **

OPERATION SET VALUES CALCULATED
AT THE START OF ITERATION 16

OPER-ATION ID	VARIABLE (ID) VALUE	OPERATION	VARIABLE (ID) VALUE	=	VARIABLE (ID) VALUE
190	M * OPVB (189) 1.00E+00 * 1.79E+02 1.78899E+02	DIV	M * OPVB (187) 1.00E+00 * 1.94E+02 1.94225E+02	=	M * OPVB (190) 1.00E+02 * 9.21E-01 9.21093E+01
193	PPGNHR(1) 6.30000E+01	SUB	PPGNH2(1) 6.30000E+01	=	OPVB (193) 0.00000E+00
194	OPVB (193) 0.00000E+00	MUL	OPVB (192) 1.73000E+01	=	OPVB (194) 0.00000E+00
196	OPVB (195) 1.00836E+04	SUB	OPVB (194) 0.00000E+00	=	BKELEI(1) 1.00836E+04
199	OPVB (198) 6.30000E+01	EQL		=	PPGNH2(1) 6.30000E+01

IP7019232

```
*** WARNING FROM VALTHV ROUTINE ***
    For throttle valve component with ID =  39, the
    calculated equivalent throttle flow ratio is
       1.03396.  This is not physically possible.  The
    equivalent throttle flow ratio is the load-point
    flow coefficient divided by the VWO flow
    coefficient.  This ratio cannot be larger than 1.
    You are advised to review your model to determine
    the cause of this result and to fix it.

    You have the option to suppress the printing of
    this warning message by use of suppression
    index = 111.
*** END OF WARNING ***
```

IP7019233

** SAVE CASE **

SCHEDULED VARIABLE VALUES CALCULATED

SCHEDULE VARIABLES ID	Y VALUE USED FOR ITERATE 19	X VALUE FROM ITERATE 18	Z VALUE FROM ITERATE 18
1	EXUSLS(12) 4.17155E+01	VEANP (12) 1.27767E+03	
2	EXUSLS(13) 2.48456E+01	VEANP (13) 9.70402E+02	
3	EXUSLS(14) 1.38288E+01	VEANP (14) 7.50720E+02	
6	OPVB (195) 1.00836E+04	BKGROS(0) 9.86720E+02	POWFAC(1) 9.00000E-01
16	WWFIXB(141) 1.05769E+04	WWVSC (59) 7.13426E+06	
17	WWFIXB(44) 4.99983E+04	WWVSC (59) 7.13426E+06	

IP7019234

** SAVE CASE **

OPERATION SET VALUES CALCULATED
AT THE START OF ITERATION 19

OPER-ATION ID	VARIABLE (ID) VALUE	OPERATION	VARIABLE (ID) VALUE	=	VARIABLE (ID) VALUE
1	PP (81) 5.69052E+00	EQL		=	PPSTRU(146) 5.69052E+00
2	PP (-146) 1.02811E+01	PTH	TT (-146) 1.75381E+02	=	OPVB (1) 1.43390E+02
3	PP (81) 5.69052E+00	SHF		=	OPVB (2) 1.35693E+02
4	PP (81) 5.69052E+00	SHG		=	OPVB (3) 1.13296E+03
5	OPVB (1) 1.43390E+02	SUB	OPVB (2) 1.35693E+02	=	OPVB (4) 7.69667E+00
6	OPVB (3) 1.13296E+03	SUB	OPVB (2) 1.35693E+02	=	OPVB (5) 9.97268E+02
7	OPVB (4) 7.69667E+00	DIV	OPVB (5) 9.97268E+02	=	OPVB (6) 7.71776E-03
8	WW (146) 6.54984E+05	MUL	OPVB (6) 7.71776E-03	=	WWFIXB(65) 5.05501E+03
9	OPVB (3) 1.13296E+03	EQL		=	HHFIXB(65) 1.13296E+03
10	WWFIXB(65) 5.05501E+03	BIF	OPVB (8) 0.00000E+00	=	OPVB (7) 1.00000E+00
11	WWFIXB(65) 5.05501E+03	MUL	OPVB (7) 1.00000E+00	=	WWFIXB(65) 5.05501E+03
21	OPVB (22) 1.00000E-03	MUL	WW (59) 7.13426E+06	=	OPVB (20) 7.13426E+03

IP7019235

** SAVE CASE **

OPERATION SET VALUES CALCULATED
AT THE START OF ITERATION 19

OPER-ATION ID	VARIABLE (ID) VALUE	OPERATION	VARIABLE (ID) VALUE	=	VARIABLE (ID) VALUE
23	WW (421) 0.00000E+00	ADD	WW (416) 0.00000E+00	=	OPVB (24) 0.00000E+00
24	OPVB (24) 0.00000E+00	ADD	OPVB (20) 7.13426E+03	=	WWVSC (176) 7.13426E+03
30	OPVB (30) 0.00000E+00	MUL	WW (59) 7.13426E+06	=	WWFIXB(145) 0.00000E+00
32	TT (72) 2.04181E+02	EQL		=	TTTORH(33) 2.04181E+02
40	OPVB (40) 0.00000E+00	MUL	WW (59) 7.13426E+06	=	WWFIXB(144) 0.00000E+00
42	OPVB (41) 7.81904E+01	EQL		=	TTTORH(32) 7.81904E+01
50	OPVB (50) 0.00000E+00	MUL	WW (59) 7.13426E+06	=	WWFIXB(608) 0.00000E+00
60	OPVB (60) 9.00000E-03	MUL	WW (59) 7.13426E+06	=	WWFIXB(415) 6.42083E+04
61	OPVB (61) 0.00000E+00	MUL	WW (59) 7.13426E+06	=	WWFIXB(413) 0.00000E+00
62	OPVB (63) 9.00000E-01	EQL		=	POWFAC(1) 9.00000E-01
100	WW (59) 7.13426E+06	SUB	WW (609) 0.00000E+00	=	OPVB (100) 7.13426E+06
101	HH (59) 1.46121E+03	SUB	HH (114) 5.54896E+02	=	OPVB (101) 9.06310E+02

IP7019236

** SAVE CASE **

OPERATION SET VALUES CALCULATED
AT THE START OF ITERATION 19

OPER-ATION ID	VARIABLE (ID) VALUE	OPERATION	VARIABLE (ID) VALUE	=	VARIABLE (ID) VALUE
102	OPVB (100) 7.13426E+06	MUL	OPVB (101) 9.06310E+02	=	OPVB (102) 6.46585E+09
103	HH (15) 1.51835E+03	SUB	HH (613) 1.30922E+03	=	OPVB (103) 2.09135E+02
104	WW (613) 5.79506E+06	MUL	OPVB (103) 2.09135E+02	=	OPVB (104) 1.21195E+09
105	HH (59) 1.46121E+03	SUB	HH (106) 3.31986E+02	=	OPVB (105) 1.12922E+03
106	WW (609) 0.00000E+00	MUL	OPVB (105) 1.12922E+03	=	OPVB (106) 0.00000E+00
107	PP (114) 2.74797E+03	PTH	OPVB (99) 0.00000E+00	=	OPVB (107) 7.62851E+02
108	OPVB (107) 7.62851E+02	SUB	HH (114) 5.54896E+02	=	OPVB (108) 2.07955E+02
109	OPVB (20) 7.13426E+03	MUL	OPVB (108) 2.07955E+02	=	OPVB (109) 1.48360E+06
110	OPVB (102) 6.46585E+09	ADD	OPVB (104) 1.21195E+09	=	OPVB (110) 7.67780E+09
111	OPVB (106) 0.00000E+00	ADD	OPVB (109) 1.48360E+06	=	OPVB (111) 1.48360E+06
112	OPVB (110) 7.67780E+09	ADD	OPVB (111) 1.48360E+06	=	OPVB (112) 7.67928E+09
113	BKNET (0) 9.83059E+02	MUL	OPVB (10) 1.00000E+03	=	OPVB (113) 9.83059E+05

IP7019237

** SAVE CASE **

OPERATION SET VALUES CALCULATED
AT THE START OF ITERATION 19

OPER-ATION ID	VARIABLE (ID) VALUE	OPERATION	VARIABLE (ID) VALUE	=	VARIABLE (ID) VALUE
114	OPVB (112) 7.67928E+09	DIV	OPVB (113) 9.83059E+05	=	OPVB (114) 7.81162E+03
150	VV (22) 1.61845E-02	MUL	OPVB (150) 1.24680E-01	=	OPVB (151) 2.01789E-03
151	OPVB (151) 2.01789E-03	MUL	WW (22) 5.32427E+06	=	OPVB (152) 1.07438E+04
155	VV (207) 1.79951E-02	MUL	OPVB (150) 1.24680E-01	=	OPVB (156) 2.24363E-03
156	OPVB (156) 2.24363E-03	MUL	WW (207) 7.09140E+06	=	OPVB (157) 1.59104E+04
160	PP (4) 6.30878E+02	PSH	SS (59) 1.53267E+00	=	OPVB (165) 1.29533E+03
161	HH (59) 1.46121E+03	SUB	OPVB (165) 1.29533E+03	=	OPVB (166) 1.65873E+02
162	HH (59) 1.46121E+03	SUB	HH (66) 1.30922E+03	=	OPVB (167) 1.51990E+02
163	M * OPVB (167) 1.00E+00 * 1.52E+02 1.51990E+02	DIV	M * OPVB (166) 1.00E+00 * 1.66E+02 1.65873E+02	=	M * OPVB (168) 1.00E+02 * 9.16E-01 9.16305E+01
170	PP (1) 1.71097E+03	DIV	PP (4) 6.30878E+02	=	OPVB (170) 2.71204E+00
171	PP (67) 5.88609E+02	DIV	PP (777) 1.38508E+02	=	OPVB (171) 4.24963E+00

IP7019238

** SAVE CASE **

OPERATION SET VALUES CALCULATED
AT THE START OF ITERATION 19

OPER-ATION ID	VARIABLE (ID) VALUE	OPERATION	VARIABLE (ID) VALUE	=	VARIABLE (ID) VALUE
172	PP (66) 6.30878E+02	SUB	PP (-15) 5.88609E+02	=	OPVB (172) 4.22688E+01
173	M * OPVB (172) 1.00E+00 * 4.23E+01 4.22688E+01	DIV	M * PP (66) 1.00E+00 * 6.31E+02 6.30878E+02	=	M * OPVB (173) 1.00E+02 * 6.70E-02 6.70000E+00
180	HH (-67) 1.51833E+03	MUL	WW (67) 5.79757E+06	=	OPVB (180) 8.80259E+09
181	HH (180) 1.42311E+03	MUL	WW (180) 1.71589E+04	=	OPVB (181) 2.44191E+07
182	OPVB (180) 8.80259E+09	ADD	OPVB (181) 2.44191E+07	=	OPVB (182) 8.82701E+09
183	WW (67) 5.79757E+06	ADD	WW (180) 1.71589E+04	=	OPVB (183) 5.81472E+06
184	OPVB (182) 8.82701E+09	DIV	OPVB (183) 5.81472E+06	=	OPVB (184) 1.51804E+03
185	PP (-67) 5.88609E+02	PHS	OPVB (184) 1.51804E+03	=	OPVB (185) 1.71801E+00
186	PP (97) 1.38508E+02	PSH	OPVB (185) 1.71801E+00	=	OPVB (186) 1.32382E+03
187	OPVB (184) 1.51804E+03	SUB	OPVB (186) 1.32382E+03	=	OPVB (187) 1.94224E+02
189	OPVB (184) 1.51804E+03	SUB	HH (97) 1.33915E+03	=	OPVB (189) 1.78899E+02

IP7019239

** SAVE CASE **

OPERATION SET VALUES CALCULATED
AT THE START OF ITERATION 19

OPER-ATION ID	VARIABLE (ID) VALUE	OPERATION	VARIABLE (ID) VALUE	=	VARIABLE (ID) VALUE
190	M * OPVB (189) 1.00E+00 * 1.79E+02 1.78899E+02	DIV	M * OPVB (187) 1.00E+00 * 1.94E+02 1.94224E+02	=	M * OPVB (190) 1.00E+02 * 9.21E-01 9.21093E+01
193	PPGNHR(1) 6.30000E+01	SUB	PPGNH2(1) 6.30000E+01	=	OPVB (193) 0.00000E+00
194	OPVB (193) 0.00000E+00	MUL	OPVB (192) 1.73000E+01	=	OPVB (194) 0.00000E+00
196	OPVB (195) 1.00836E+04	SUB	OPVB (194) 0.00000E+00	=	BKELEI(1) 1.00836E+04
199	OPVB (198) 6.30000E+01	EQL		=	PPGNH2(1) 6.30000E+01

IP7019240

** SAVE CASE **

TABLE OF NON-ZERO OPERATIONAL VARIABLES
(PRESENTATION IS: ID, VALUE; ID, ...)

1, 1.43390E+02;	2, 1.35693E+02;	3, 1.13296E+03;	4, 7.69667E+00
5, 9.97268E+02;	6, 7.71776E-03;	7, 1.00000E+00;	10, 1.00000E+03
14, 7.71700E+03;	20, 7.13426E+03;	21, 2.55772E-03;	22, 1.00000E-03
32, 1.00000E+02;	41, 7.81904E+01;	60, 9.00000E-03;	63, 9.00000E-01
68, 6.41996E+02;	69, 1.31543E+03;	70, 8.09822E+09;	71, 3.47239E+07
72, 8.06350E+09;	73, 1.31484E+03;	76, 6.41631E+08;	77, 2.59914E+07
78, 6.15640E+08;	79, 1.34760E+03;	100, 7.13426E+06;	101, 9.06310E+02
102, 6.46585E+09;	103, 2.09135E+02;	104, 1.21195E+09;	105, 1.12922E+03
107, 7.62851E+02;	108, 2.07955E+02;	109, 1.48360E+06;	110, 7.67780E+09
111, 1.48360E+06;	112, 7.67928E+09;	113, 9.83059E+05;	114, 7.81162E+03
150, 1.24680E-01;	151, 2.01789E-03;	152, 1.07438E+04;	156, 2.24363E-03
157, 1.59104E+04;	165, 1.29533E+03;	166, 1.65873E+02;	167, 1.51990E+02
168, 9.16305E+01;	170, 2.71204E+00;	171, 4.24963E+00;	172, 4.22688E+01
173, 6.70000E+00;	180, 8.80259E+09;	181, 2.44191E+07;	182, 8.82701E+09
183, 5.81472E+06;	184, 1.51804E+03;	185, 1.71801E+00;	186, 1.32382E+03
187, 1.94224E+02;	189, 1.78899E+02;	190, 9.21093E+01;	192, 1.73000E+01
195, 1.00836E+04;	198, 6.30000E+01;	200, 2.22308E+03	

IP7019241

** SAVE CASE **

SUMMARY OF ACTIVE SPECIAL OPTIONS

```
*** SPECIAL OPTION  1 IS ACTIVE
    IT SETS INPUT COMPONENT FLOW ACCORDING TO FLOW COEFFICIENT

       PRODUCING KEY RESULTS:

          STATUS                 =  CONVERGED
          INPUT COMPONENT FLOW   =  7.13426E+06 LBM/HR
          THROTTLE INLET FLOW    =  7.13426E+06 LBM/HR
          FLOW COEFFICIENT       =  8.21736E+04

       BASED ON KEY INPUTS:

          REF PRESSURE           =  2.28584E+03 PSIA
              ENTHALPY           =  1.46624E+03 BTU/LBM
              FLOW               =  6.73256E+06 LBM/HR

          CURRENT PRESSURE       =  2.41220E+03 PSIA
                  ENTHALPY       =  1.46121E+03 BTU/LBM


*** SPECIAL OPTION  6 IS ACTIVE
    IT ANALYZES TEST DATA, AUTOMATICALLY STANDARDIZES
    SYSTEM PERFORMANCE, AND CALCULATES THE PERFORMANCE
    IMPACT OF COMPONENT UPGRADES

       PRODUCING KEY RESULTS:

          SEE OPTION 6 SPECIFIC TABLES THROUGHOUT THE
          SEVERAL CASES
          SPECIFIC RESULTS OF INTEREST, WITH TITLES:
            PERFORMANCE TEST ANALYSIS RESULTS - ALL CASES
               AT AND AFTER STANDARDIZATION
            COMPARISON OF STANDARDIZED RESULTS
               AT STANDARDIZATION STEP
            GENERATION, HEAT RATE, AND COST - FINAL CASE

       BASED ON KEY INPUTS:

          PRIMARILY TEST DATA - TEMPERATURES, PRESSURES,
          AND FLOWS ENTERED IN THE TEST REDUCTION STEP
```

IP7019242

** SAVE CASE **

FLAG SETTINGS AND DATA FOR SYSTEM

```
NTGCYC =   2, FOSSIL TURBINE GENERATOR CYCLE CALCULATION

NTIMES =  19, NUMBER OF SYSTEM ITERATIONS
              (ITRMAX = 100, ITRMIN =   5)

NCMP   = 161, NUMBER OF COMPONENTS USED IN THIS CASE
              (MXCMP = 500, MAXIMUM NUMBER ALLOWED)

NSTR   = 244, NUMBER OF STREAMS USED IN THIS CASE
              (MXSTR = 600, MAXIMUM NUMBER ALLOWED)

NRHEAT =   1, REHEAT TURBINE PLANT DESIGN

CONVERGENCE DATA:

       EXTERR =  1.00000E+01 LBM/HR, EXTRACTION FLOW CONVERGENCE
       CIRERR =  1.00000E+00 LBM/HR, TOTAL SYSTEM MASS FLOW CONVERGENCE
       TERROR =  5.00000E-06 - ,     COMPONENT CONVERGENCE
       PERROR =  1.00000E-03 - ,     STREAM CONVERGENCE
       GENERR =  5.00000E+01 KW,     GENERATOR CONVERGENCE
       ENEROR =  1.00000E+04 BTU/HR, ENERGY CONVERGENCE

REFERENCE DATA:

       TTDEAD =    50.00 DEG F, DEAD STATE TEMPERATURE
       PPDEAD =    14.70 PSIA,  DEAD STATE PRESSURE
       ZZDEAD =     0.00 FT,    DEAD STATE ELEVATION
       TTAIR  =    50.00 DEG F, AMBIENT TEMPERATURE

STEAM TURBINE DATA:

       NTURB  = 1,        GENERAL ELECTRIC TURBINES
       NGEPRO = 3,        TURBINES SOLVED, G.E. FOSSIL PROCEDURE GER-2007C
       TFREQ  = 1.033955, EQUIVALENT THROTTLE FLOW RATIO
       TFR1ST = 1.000000, FIRST ADMISSION THROTTLE FLOW RATIO

GENERATOR NO. 1 DATA

       NGNTYP =  2,           CONDUCTOR COOLED GENERATOR
       NGENER =  1,           GENERAL ELECTRIC GENERATOR
       NGNCOL =  0,           LOSSES ARE NOT RECOVERABLE THROUGH COOLERS
       ISPEED =  3600 RPM,    GENERATOR SPEED
       RKGRAT =  991000 KVA   RATED GENERATOR CAPACITY
```

IP7019243

** SAVE CASE **

FLAG SETTINGS AND DATA FOR SYSTEM
(CONTINUED)

```
SPECIAL OPTION NUMBER  1 HAS BEEN FLAGGED IN THE INPUT
          (CALCULATIONS BEGIN AT ITRSPC =   5).
SPECIAL OPTION NUMBER  6 HAS BEEN FLAGGED IN THE INPUT
          (CALCULATIONS BEGIN AT ITRSPC =   5).
```

IP7019244

GEOMETRY CONFIGURATION OF MODEL

COMP NO.	COMP TYPE	COMPONENT DESCRIPTION	CONNECTING STREAM NOS. AND STREAM TYPE (NO. - TYPE) 1 IN	1 OUT	2 IN	2 OUT	3 IN	3 OUT
1	8	GENERAL TURBINE	118-0	1-0				
3	8	GENERAL TURBINE	120-0	3-0		684-0		
4	8	GENERAL TURBINE	3-0	4-0				
5	8	GENERAL TURBINE	67-2	5-0				
6	8	GENERAL TURBINE	68-0	7-0		411-0		
7	8	GENERAL TURBINE	7-0	777-0		28-0		
8	8	GENERAL TURBINE	127-2	8-0		404-2		
9	8	GENERAL TURBINE	8-0	9-0		405-2		
10	8	GENERAL TURBINE	9-0	10-0		406-2		
11	8	GENERAL TURBINE	307-0	11-0		12-0		
12	8	GENERAL TURBINE	79-0	16-0				
13	8	GENERAL TURBINE	77-0	13-0				
14	8	GENERAL TURBINE	11-0	14-0				
15	25	FOSSIL REHEATER	613-0	15-0				
16	10	STD. CONDENSER	16-0	18-0	108-2	23-2	781-0	
17	10	STD. CONDENSER	13-0	20-0	129-2	17-0		
18	10	STD. CONDENSER	14-0	22-0	23-2	62-0	132-0	
19	14	STD. FW. HEATER	154-0	19-0	80-2	21-0		
20	16	FWHT. BACK-DRAIN	138-0	24-0	406-2	50-2	149-0	
21	16	FWHT. BACK-DRAIN	139-0	25-0	405-2	51-0	219-0	
22	16	FWHT. BACK-DRAIN	140-0	26-2	404-2	52-0		
23	15	CONTACT HEATER	75-0	27-0	142-2		100-0	
24	18	FW. W/DESUP+COOL	158-0	34-2	166-2	37-0	161-0	
25	18	FW. W/DESUP+COOL	172-0	38-2	224-2	45-0	179-0	
26	18	FW. W/DESUP+COOL	34-2	32-2	167-2	36-0	162-0	
27	18	FW. W/DESUP+COOL	38-2	41-2	170-2	40-0	178-0	
28	18	FW. W/DESUP+COOL	32-2	33-0	168-2	35-0		
29	18	FW. W/DESUP+COOL	41-2	46-0	169-2	39-0		
30	20	GEN. HT. EXCH.	104-0	30-2	210-0	57-0		
31	23	EXT. DRAIN COOL.	133-0	31-0	303-0	49-0		
32	27	SPEC. HT. EXCH.	192-0	55-0				
33	27	SPEC. HT. EXCH.	194-0	56-0				
34	41	STD. ELE. PUMP	200-0	42-0				
35	41	STD. ELE. PUMP	196-0	43-0				
36	61	FIXED FLOW SPLIT	199-0	201-0		44-0		
37	40	STM. DRIVEN PUMP	202-0	420-0	152-2	63-0		
38	40	STM. DRIVEN PUMP	203-0	76-0	151-2	64-0		
39	35	THROTTLE VALVE	117-0	54-0				
40	54	TRIPLE MIXER	48-0	210-0	47-0		181-0	
42	41	STD. ELE. PUMP	125-0	58-0				

IP7019245

** SAVE CASE **

GEOMETRY CONFIGURATION OF MODEL

COMP NO.	COMP TYPE	COMPONENT DESCRIPTION	CONNECTING STREAM NOS. AND STREAM TYPE (NO. - TYPE) 1 IN	1 OUT	2 IN	2 OUT	3 IN	3 OUT
47	8	GENERAL TURBINE	306-0	79-0		81-2		
59	33	INPUT COMPONENT		59-0				
60	31	INFINITE SOURCE		107-0				
61	63	FIXED P.C. SPLIT	107-0	108-2		129-2		
62	50	STANDARD MIXER	62-0	105-0	17-0			
63	30	INFINITE SINK	105-0					
64	32	OUTPUT COMPONENT	114-2					
65	61	FIXED FLOW SPLIT	146-2	69-0		70-0		
66	50	STANDARD MIXER	137-0	66-0	131-0			
67	50	STANDARD MIXER	15-0	67-2	156-0			
68	50	STANDARD MIXER	5-0	68-0	180-0			
69	50	STANDARD MIXER	60-0	213-0	58-0			
71	50	STANDARD MIXER	334-2	71-0	134-0			
72	50	STANDARD MIXER	24-0	72-0	144-0			
73	50	STANDARD MIXER	72-0	73-0	197-0			
74	50	STANDARD MIXER	25-0	74-0	147-0			
75	50	STANDARD MIXER	26-2	75-0	150-0			
80	51	FWHT-COND. MIXER	57-0	83-0	63-0			
81	51	FWHT-COND. MIXER	208-0	84-0	95-0			
82	51	FWHT-COND. MIXER	119-0	82-0	157-0			
83	51	FWHT-COND. MIXER	82-0	86-0	183-0			
84	51	FWHT-COND. MIXER	86-0	102-0	186-0			
85	51	FWHT-COND. MIXER	102-0	85-0	128-0			
87	51	FWHT-COND. MIXER	64-0	87-0	220-0			
88	51	FWHT-COND. MIXER	87-0	88-0	218-0			
89	51	FWHT-COND. MIXER	88-0	89-0	145-0			
90	51	FWHT-COND. MIXER	89-0	90-0	413-0			
93	51	FWHT-COND. MIXER	163-0	93-0	176-0			
94	54	TRIPLE MIXER	93-0	94-0	175-0		164-0	
95	54	TRIPLE MIXER	94-0	95-0	174-0		165-0	
96	51	FWHT-COND. MIXER	136-0	96-0	130-0			
97	51	FWHT-COND. MIXER	28-0	97-0	96-0			
98	51	FWHT-COND. MIXER	97-0	98-0	222-0			
99	51	FWHT-COND. MIXER	191-0	99-0	223-0			
100	51	FWHT-COND. MIXER	109-0	100-0	99-0			
101	50	STANDARD MIXER	43-0	101-0	42-0			
106	50	STANDARD MIXER	420-0	106-0	76-0			
109	51	FWHT-COND. MIXER	110-0	109-0	204-0			
110	51	FWHT-COND. MIXER	111-0	110-0	205-0			
111	51	FWHT-COND. MIXER	160-0	111-0	173-0			

IP7019246

GEOMETRY CONFIGURATION OF MODEL

COMP NO.	COMP TYPE	COMPONENT DESCRIPTION	CONNECTING STREAM NOS. AND STREAM TYPE (NO. - TYPE) 1 IN	1 OUT	2 IN	2 OUT	3 IN	3 OUT
117	60	DEMAND SPLITTER	116-0	117-0		222-0		
118	68	VALVE STEM LEAK	54-0	118-0		125-0		
119	68	VALVE STEM LEAK	125-0	122-0		157-0		
120	64	SHAFT LEAKAGE	1-0	120-0		180-0		
121	64	SHAFT LEAKAGE	4-0	121-0		123-0		
122	64	SHAFT LEAKAGE	122-0	131-0		156-0		
123	64	SHAFT LEAKAGE	123-0	130-0		183-0		
124	64	SHAFT LEAKAGE	121-0	124-0		184-0		
125	64	SHAFT LEAKAGE	184-0	136-0		186-0		
126	60	DEMAND SPLITTER	66-0	126-0		171-0		
127	64	SHAFT LEAKAGE	777-0	127-2		148-0		
128	64	SHAFT LEAKAGE	124-0	137-0		47-0		
129	61	FIXED FLOW SPLIT	148-0	128-0		181-0		
131	63	FIXED P.C. SPLIT	22-0	135-0		212-0		
132	51	FWHT-COND. MIXER	215-0	132-0	227-0			
133	63	FIXED P.C. SPLIT	30-2	133-0		134-0		
134	63	FIXED P.C. SPLIT	71-0	138-0		144-0		
135	63	FIXED P.C. SPLIT	73-0	139-0		147-0		
136	63	FIXED P.C. SPLIT	74-0	140-0		150-0		
137	63	FIXED P.C. SPLIT	52-0	219-0		220-0		
138	63	FIXED P.C. SPLIT	51-0	149-0		218-0		
139	63	FIXED P.C. SPLIT	50-2	146-2		145-0		
140	51	FWHT-COND. MIXER	18-0	215-0	20-0			
141	67	STM. SEAL REG.	182-0	141-0		211-0		
142	60	DEMAND SPLITTER	143-0	142-2		151-2		
143	60	DEMAND SPLITTER	98-0	143-0		152-2		
144	61	FIXED FLOW SPLIT	27-0	193-0		192-0		
145	61	FIXED FLOW SPLIT	193-0	207-0		194-0		
146	63	FIXED P.C. SPLIT	55-0	187-0		191-0		
147	63	FIXED P.C. SPLIT	418-0	197-0		223-0		
148	63	FIXED P.C. SPLIT	207-0	196-0		200-0		
150	63	FIXED P.C. SPLIT	101-0	600-0		204-0		
151	63	FIXED P.C. SPLIT	31-0	154-0		155-0		153-0
153	63	FIXED P.C. SPLIT	201-0	202-0		203-0		
155	63	FIXED P.C. SPLIT	106-0	608-0		205-0		
158	63	FIXED P.C. SPLIT	159-2	172-0		158-0		
159	63	FIXED P.C. SPLIT	612-2	159-2		177-0		
160	63	FIXED P.C. SPLIT	37-0	160-0		165-0		
161	63	FIXED P.C. SPLIT	36-0	161-0		164-0		
162	63	FIXED P.C. SPLIT	35-0	162-0		163-0		

IP7019247

GEOMETRY CONFIGURATION OF MODEL

COMP NO.	COMP TYPE	COMPONENT DESCRIPTION	CONNECTING STREAM NOS. AND STREAM TYPE (NO. - TYPE) 1 IN	1 OUT	2 IN	2 OUT	3 IN	3 OUT
166	60	DEMAND SPLITTER	403-0	166-2		224-2		
167	60	DEMAND SPLITTER	402-0	167-2		170-2		
168	60	DEMAND SPLITTER	401-0	168-2		169-2		
173	61	FIXED FLOW SPLIT	85-0	182-0		48-0		
174	51	FWHT-COND. MIXER	83-0	208-0	141-0			
175	51	FWHT-COND. MIXER	417-0	227-0	214-0			
176	31	INFINITE SOURCE		214-0				
219	14	STD. FW. HEATER	155-0	225-0	450-2	226-0		
301	51	FWHT-COND. MIXER	69-0	301-0	226-0			
302	51	FWHT-COND. MIXER	301-0	302-0	21-0			
303	51	FWHT-COND. MIXER	302-0	303-0	321-0			
305	63	FIXED P.C. SPLIT	10-0	305-0		306-0		307-0
319	14	STD. FW. HEATER	153-0	319-0	999-2	321-0		
334	54	TRIPLE MIXER	19-0	334-2	225-0		319-0	
400	30	INFINITE SINK	609-0					
401	61	FIXED FLOW SPLIT	684-0	401-0		407-0		
402	61	FIXED FLOW SPLIT	171-0	402-0		408-0		
403	61	FIXED FLOW SPLIT	411-0	403-0		409-0		
404	51	FWHT-COND. MIXER	84-0	414-0	407-0			
405	51	FWHT-COND. MIXER	414-0	419-0	408-0			
406	51	FWHT-COND. MIXER	419-0	417-0	409-0			
413	61	FIXED FLOW SPLIT	187-0	413-0		421-0		
415	61	FIXED FLOW SPLIT	56-0	418-0		416-0		
416	30	INFINITE SINK	416-0					
417	30	INFINITE SINK	421-0					
450	51	FWHT-COND. MIXER	12-0	450-2	211-0			
600	50	STANDARD MIXER	600-0	199-0	61-0			
608	61	FIXED FLOW SPLIT	608-0	611-0		609-0		
609	61	FIXED FLOW SPLIT	611-0	612-2		610-0		
610	51	FWHT-COND. MIXER	126-0	613-0	610-0			
781	54	TRIPLE MIXER	90-0	781-0	49-0		44-0	
999	51	FWHT-COND. MIXER	81-2	999-2	70-0			

IP7019248

** SAVE CASE **

COMPONENT PROPERTIES

COMP	STREAM /PORT	FLU ID	MASS FLOW (LBM/HR)	TEMP (F)	PRESS (PSIA)	QUALITY (R HUM) (-)	ENTH (B/LB)	ENTRPY (B/LB-F)	SPEC. VOLUME (FT3/LBM)
1 TGEN	118/I	0	7104351.	996.7	2345.97	1.896	1461.2	1.53540	3.29E-01
	1/U	0	7104351.	903.9	1710.97	1.513	1423.1	1.53943	4.25E-01
3 TGEN	120/I	0	7087192.	903.9	1710.97	1.513	1423.1	1.53943	4.25E-01
	3/U	0	6463066.	780.8	1103.37	1.290	1371.7	1.54335	6.04E-01
	684/E	0	624126.	780.4	1097.86	1.289	1371.7	1.54384	6.07E-01
4 TGEN	3/I	0	6463066.	780.8	1103.37	1.290	1371.7	1.54335	6.04E-01
	4/U	0	6463066.	633.4	630.88	1.145	1308.6	1.54495	9.36E-01
5 TGEN	67/I	0	5797566.	1000.0	588.61	1.427	1518.3	1.71820	1.44E+00
	5/U	0	5797566.	915.8	428.72	1.352	1477.8	1.72366	1.87E+00
6 TGEN	68/I	0	5814725.	915.5	428.72	1.352	1477.6	1.72354	1.87E+00
	7/U	0	5530264.	785.6	265.07	1.259	1415.2	1.72768	2.74E+00
	411/E	0	284461.	799.0	262.10	1.268	1422.3	1.73458	2.80E+00
TIP LKG			32413.						
7 TGEN	7/I	0	5530264.	785.6	265.07	1.259	1415.2	1.72768	2.74E+00
	777/U	0	5042936.	627.0	138.51	1.169	1340.4	1.73354	4.58E+00
	28/E	0	487328.	627.0	138.51	1.169	1340.4	1.73354	4.58E+00
8 TGEN	127/I	0	5036684.	626.8	136.92	1.169	1340.4	1.73479	4.64E+00
	8/U	0	4888659.	495.0	69.98	1.108	1279.7	1.74794	8.00E+00
	404/E	0	148025.	521.7	69.10	1.123	1293.0	1.76305	8.34E+00
TIP LKG			32417.						
9 TGEN	8/I	0	4888659.	495.0	69.98	1.108	1279.7	1.74794	8.00E+00
	9/U	0	4564146.	419.5	45.86	1.078	1245.3	1.75619	1.13E+01
	405/E	0	324513.	430.0	45.23	1.084	1250.5	1.76359	1.16E+01
TIP LKG			49026.						
10 TGEN	9/I	0	4564146.	419.5	45.86	1.078	1245.3	1.75619	1.13E+01
	10/U	0	4381700.	223.5	13.82	1.007	1156.3	1.77216	2.91E+01
	406/E	0	182445.	245.4	13.62	1.018	1166.9	1.78906	3.05E+01
TIP LKG			21789.						
11 TGEN	307/I	0	1460421.	223.5	13.82	1.007	1156.3	1.77216	2.91E+01
	11/U	0	1398114.	170.5	6.07	0.974	1109.0	1.78826	5.98E+01
	12/E	0	62307.	170.0	5.99	0.975	1109.0	1.78954	6.05E+01

IP7019249

** SAVE CASE **

COMPONENT PROPERTIES

COMP	STREAM /PORT	FLU ID	MASS FLOW (LBM/HR)	TEMP (F)	PRESS (PSIA)	QUALITY (R HUM) (-)	ENTH (B/LB)	ENTRPY (B/LB-F)	SPEC. VOLUME (FT3/LBM)
12 TGEN	79/I	0	1391818.	169.5	5.93	0.974	1108.1	1.78918	6.10E+01
	16/U	0	1391818.	95.0	0.82	0.938	1039.0	1.88031	3.80E+02
13 TGEN	77/I	0	1389060.	168.3	5.77	0.973	1106.5	1.78960	6.26E+01
	13/U	0	1389060.	104.9	1.10	0.935	1040.3	1.85168	2.85E+02
14 TGEN	11/I	0	1398114.	170.5	6.07	0.974	1109.0	1.78826	5.98E+01
	14/U	0	1398114.	114.9	1.47	0.935	1045.0	1.83036	2.17E+02
15 HFRH	613/T	0	5795056.	634.3	630.88	1.145	1309.2	1.54550	9.38E-01
	15/T	0	5795056.	1000.0	588.61	1.427	1518.4	1.71821	1.44E+00
16 COND	16/S	0	1391818.	95.0	0.82	0.938	1039.0	1.88031	3.80E+02
	108/T	0	95771455.	81.0	50.00	-0.217	49.2	0.09520	1.61E-02
	781/D	0	1000097.	95.0	0.82	0.149	218.3	0.40053	6.03E+01
	18/D	0	2391915.	95.0	0.82	0.000	63.0	0.12059	1.61E-02
	23/T	0	95771455.	96.9	50.00	-0.200	65.0	0.12399	1.61E-02
17 COND	13/S	0	1389060.	104.9	1.10	0.935	1040.3	1.85168	2.85E+02
	129/T	0	47878545.	80.9	50.00	-0.217	49.1	0.09496	1.61E-02
	20/D	0	1389060.	104.9	1.10	0.000	72.9	0.13833	1.61E-02
	17/T	0	47878545.	109.0	50.00	-0.187	77.1	0.14554	1.62E-02
18 COND	14/S	0	1398114.	114.9	1.47	0.935	1045.0	1.83036	2.17E+02
	23/T	0	95771455.	95.1	50.00	-0.202	63.3	0.12088	1.61E-02
	132/D	0	3926158.	131.3	11.46	-0.070	99.3	0.18394	1.63E-02
	22/D	0	5324271.	114.9	1.47	0.000	82.9	0.15583	1.62E-02
	62/T	0	95771455.	109.9	50.00	-0.186	78.0	0.14704	1.62E-02
19 FWH	154/T	0	1758443.	124.5	236.13	-0.334	93.1	0.17215	1.62E-02
	80/S	0	71799.	166.2	5.50	0.974	1106.5	1.79475	6.55E+01
	19/T	0	1758443.	164.2	236.13	-0.286	132.8	0.23788	1.64E-02
	21/D	0	71799.	166.2	5.50	0.000	134.2	0.24131	1.64E-02
20 FWH	138/T	0	5274273.	165.4	185.44	-0.253	133.8	0.23979	1.64E-02
	406/S	0	182445.	245.0	13.09	1.019	1166.9	1.79335	3.17E+01
	149/D	0	472538.	214.2	44.00	-0.064	182.4	0.31541	1.67E-02
	24/T	0	5274273.	204.2	185.44	-0.207	172.7	0.30018	1.67E-02
	50/D	0	654984.	175.4	13.09	-0.031	143.4	0.25586	1.65E-02

IP7019250

** SAVE CASE **

COMPONENT PROPERTIES

COMP	STREAM /PORT	FLU ID	MASS FLOW (LBM/HR)	TEMP (F)	PRESS (PSIA)	QUALITY (R HUM) (-)	ENTH (B/LB)	ENTRPY (B/LB-F)	SPEC. VOLUME (FT3/LBM)
21 FWH	139/T	0	5274273.	204.2	185.44	-0.207	172.7	0.30018	1.67E-02
	405/S	0	324513.	429.7	44.00	1.084	1250.5	1.76660	1.19E+01
	219/D	0	148025.	281.1	68.66	-0.023	250.3	0.41138	1.73E-02
	25/T	0	5274273.	271.0	185.44	-0.127	240.3	0.39726	1.72E-02
	51/D	0	472538.	214.2	44.00	-0.064	182.4	0.31541	1.67E-02
22 FWH	140/T	0	5274273.	271.1	185.44	-0.127	240.3	0.39726	1.72E-02
	404/S	0	148025.	521.7	68.66	1.123	1293.0	1.76374	8.39E+00
	26/T	0	5274273.	299.6	185.44	-0.093	269.6	0.43656	1.74E-02
	52/D	0	148025.	281.1	68.66	-0.023	250.3	0.41138	1.73E-02
23 D-A	75/FW	0	5274273.	299.7	135.61	-0.060	269.6	0.43677	1.74E-02
	142/S	0	249561.	624.1	135.75	1.168	1339.1	1.73452	4.67E+00
	100/D	0	1567562.	365.8	260.01	-0.050	338.6	0.52337	1.82E-02
	27/D	0	7091397.	350.7	135.75	0.000	322.5	0.50413	1.80E-02
24 FWH	158/T	0	3570698.	355.8	2785.34	-1.516	332.0	0.50503	1.78E-02
	166/S	0	142383.	798.8	260.01	1.268	1422.3	1.73544	2.82E+00
	161/D	0	641201.	416.5	623.81	-0.114	393.3	0.58619	1.88E-02
	34/T	0	3570698.	406.5	2785.34	-1.332	385.0	0.56811	1.84E-02
	37/D	0	783583.	365.8	260.01	-0.050	338.6	0.52337	1.82E-02
25 FWH	172/T	0	3570698.	355.8	2785.34	-1.516	332.0	0.50503	1.78E-02
	224/S	0	142078.	798.8	259.73	1.268	1422.3	1.73555	2.83E+00
	179/D	0	641901.	416.4	624.90	-0.115	393.2	0.58607	1.88E-02
	38/T	0	3570698.	406.4	2785.34	-1.332	384.9	0.56800	1.84E-02
	45/D	0	783979.	365.8	259.73	-0.050	338.6	0.52337	1.82E-02
26 FWH	34/T	0	3570698.	406.5	2774.78	-1.313	385.0	0.56812	1.84E-02
	167/S	0	328925.	633.4	623.81	1.145	1309.2	1.54662	9.48E-01
	162/D	0	312276.	501.4	1087.24	-0.104	489.4	0.68892	2.04E-02
	32/T	0	3570698.	491.5	2774.78	-0.994	477.7	0.67020	1.98E-02
	36/D	0	641201.	416.5	623.81	-0.114	393.3	0.58619	1.88E-02
27 FWH	38/T	0	3570698.	406.4	2774.78	-1.313	384.9	0.56801	1.84E-02
	170/S	0	330051.	633.6	624.90	1.145	1309.2	1.54645	9.47E-01
	178/D	0	311850.	501.6	1087.89	-0.104	489.6	0.68915	2.04E-02
	41/T	0	3570698.	491.6	2774.78	-0.993	478.0	0.67043	1.98E-02
	40/D	0	641901.	416.4	624.90	-0.115	393.2	0.58607	1.88E-02

IP7019251

** SAVE CASE **

COMPONENT PROPERTIES

COMP	STREAM /PORT	FLU ID	MASS FLOW (LBM/HR)	TEMP (F)	PRESS (PSIA)	QUALITY (R HUM) (-)	ENTH (B/LB)	ENTRPY (B/LB-F)	SPEC. VOLUME (FT3/LBM)
28 FWH	32/T	0	3570698.	491.4	2768.92	-0.985	477.7	0.67021	1.98E-02
	168/S	0	312276.	779.5	1087.24	1.288	1371.7	1.54481	6.13E-01
	33/T	0	3570698.	556.9	2768.92	-0.721	554.9	0.74864	2.14E-02
	35/D	0	312276.	501.4	1087.24	-0.104	489.4	0.68892	2.04E-02
29 FWH	41/T	0	3570698.	491.6	2768.91	-0.984	477.9	0.67044	1.98E-02
	169/S	0	311850.	779.5	1087.89	1.288	1371.7	1.54475	6.12E-01
	46/T	0	3570698.	557.0	2768.91	-0.721	555.0	0.74873	2.14E-02
	39/D	0	311850.	501.6	1087.89	-0.104	489.6	0.68915	2.04E-02
30 HXGN	104/T	0	5274273.	115.1	434.82	-0.452	84.2	0.15585	1.62E-02
	210/S	0	7720.	629.2	293.18	1.157	1331.2	1.64475	2.12E+00
	30/T	0	5274273.	116.8	434.82	-0.450	85.9	0.15880	1.62E-02
	57/D	0	7720.	203.9	12.50	0.000	172.0	0.29996	1.67E-02
31 HXDC	133/T	0	5274273.	117.3	236.13	-0.343	85.9	0.15983	1.62E-02
	303/S	0	868269.	167.6	5.68	-0.000	135.6	0.24352	1.64E-02
	31/T	0	5274273.	124.5	236.13	-0.334	93.1	0.17215	1.62E-02
	49/D	0	868269.	124.1	5.68	-0.043	92.1	0.17173	1.62E-02
32 HXSP	192/T	0	0.	350.7	135.75	0.000	322.5	0.50413	1.80E-02
	55/T	0	0.	350.7	135.75	0.000	322.5	0.50413	1.80E-02
33 HXSP	194/T	0	0.	350.7	135.75	0.000	322.5	0.50413	1.80E-02
	56/T	0	0.	350.7	135.75	0.000	322.5	0.50413	1.80E-02
34 PMEL	200/I	0	3545698.	350.7	135.75	0.000	322.5	0.50413	1.80E-02
	42/U	0	3545698.	351.1	298.05	-0.086	323.2	0.50437	1.80E-02
35 PMEL	196/I	0	3545698.	350.7	135.75	0.000	322.5	0.50413	1.80E-02
	43/U	0	3545698.	351.1	298.05	-0.086	323.2	0.50437	1.80E-02
36 SFIX	199/I	0	7141395.	349.5	298.05	-0.088	321.5	0.50231	1.80E-02
	201/U	0	7141395.	349.5	298.05	-0.088	321.5	0.50231	1.80E-02
	44/B	0	0.	349.5	298.05	-0.088	321.5	0.50231	1.80E-02
37 PMST	202/IP	0	3570698.	349.5	298.05	-0.088	321.5	0.50231	1.80E-02
	152/IT	0	126636.	624.3	137.11	1.168	1339.1	1.73344	4.62E+00
	420/UP	0	3570698.	355.7	2829.65	-1.613	332.0	0.50488	1.78E-02
	63/IT	0	126636.	114.0	1.47	0.928	1027.7	1.81758	2.16E+02

IP7019252

** SAVE CASE **

COMPONENT PROPERTIES

COMP	STREAM /PORT	FLU ID	MASS FLOW (LBM/HR)	TEMP (F)	PRESS (PSIA)	QUALITY (R HUM) (-)	ENTH (B/LB)	ENTRPY (B/LB-F)	SPEC. VOLUME (FT3/LBM)
38 PMST	203/IP	0	3570698.	349.5	298.05	-0.088	321.5	0.50231	1.80E-02
	151/IT	0	131828.	624.3	137.11	1.168	1339.1	1.73344	4.62E+00
	76/UP	0	3570698.	355.7	2831.76	-1.618	332.0	0.50488	1.78E-02
	64/UT	0	131828.	95.0	0.82	0.948	1049.3	1.89891	3.84E+02
39 VTHR	117/I	0	7134261.	1000.0	2412.20	1.947	1461.2	1.53267	3.20E-01
	54/U	0	7134261.	996.7	2345.97	1.896	1461.2	1.53540	3.29E-01
40 M3WA	48/IA	0	5200.	641.8	346.05	1.163	1334.4	1.63022	1.81E+00
	47/IB	0	1258.	633.4	630.88	1.145	1308.6	1.54495	9.36E-01
	181/IC	0	1262.	627.0	138.51	1.169	1340.4	1.73354	4.58E+00
	210/U	0	7720.	629.2	293.18	1.157	1331.2	1.64475	2.12E+00
42 PMEL	135/I	0	2662136.	114.9	1.47	0.000	82.9	0.15583	1.62E-02
	58/U	0	2662136.	115.1	434.82	-0.452	84.2	0.15585	1.62E-02
43 PMEL	212/I	0	2662136.	114.9	1.47	0.000	82.9	0.15583	1.62E-02
	60/U	0	2662136.	115.1	434.82	-0.452	84.2	0.15585	1.62E-02
44 SFIX	213/I	0	5324271.	115.1	434.82	-0.452	84.2	0.15585	1.62E-02
	104/U	0	5274273.	115.1	434.82	-0.452	84.2	0.15585	1.62E-02
	61/B	0	49998.	115.1	434.82	-0.452	84.2	0.15585	1.62E-02
46 TGEN	305/I	0	1460859.	223.5	13.82	1.007	1156.3	1.77216	2.91E+01
	77/U	0	1389060.	168.3	5.77	0.973	1106.5	1.78960	6.26E+01
	80/E	0	71799.	167.8	5.70	0.973	1106.5	1.79087	6.33E+01
47 TGEN	306/I	0	1460421.	223.5	13.82	1.007	1156.3	1.77216	2.91E+01
	79/U	0	1391818.	169.5	5.93	0.974	1108.1	1.78918	6.10E+01
	81/E	0	68603.	169.0	5.86	0.974	1108.1	1.79046	6.17E+01
59 IPUT	59/U	0	7134261.	1000.0	2412.20	1.947	1461.2	1.53267	3.20E-01
60 SRCE	107/U	0	143650000.	72.3	50.00	-0.226	40.5	0.07899	1.61E-02
61 SPCT	107/I	0	143650000.	72.3	50.00	-0.226	40.5	0.07899	1.61E-02
	108/U	0	95771455.	72.3	50.00	-0.226	40.5	0.07899	1.61E-02
	129/B	0	47878545.	72.3	50.00	-0.226	40.5	0.07899	1.61E-02
62 MIXR	62/IA	0	95771455.	100.0	50.00	0.186	78.0	0.14704	1.62E-02

IP7019253

** SAVE CASE **

COMPONENT PROPERTIES

COMP	STREAM /PORT	FLU ID	MASS FLOW (LBM/HR)	TEMP (F)	PRESS (PSIA)	QUALITY (R HUM) (-)	ENTH (B/LB)	ENTRPY (B/LB-F)	SPEC. VOLUME (FT3/LBM)
63 SINK	105/I	0	143650000.	109.6	50.00	-0.186	77.7	0.14654	1.62E-02
64 OPUT	114/I	0	7141395.	556.9	2747.97	-0.697	554.9	0.74874	2.14E-02
65 SFIX	146/I	0	654984.	167.8	5.70	0.007	143.4	0.25597	5.15E-01
	69/U	0	649929.	167.7	5.70	-0.000	135.7	0.24370	1.64E-02
	70/B	0	5055.	167.8	5.70	0.999	1133.0	1.83315	6.51E+01
66 MIXR	137/IA	0	6428881.	633.4	630.88	1.145	1308.6	1.54495	9.36E-01
	131/IB	0	25150.	996.7	2345.97	1.896	1461.2	1.53540	3.29E-01
	66/U	0	6454031.	634.3	630.88	1.145	1309.2	1.54550	9.38E-01
67 MIXR	15/IA	0	5795056.	1000.0	588.61	1.427	1518.4	1.71821	1.44E+00
	156/IB	0	2511.	996.7	2345.97	1.896	1461.2	1.53540	3.29E-01
	67/U	0	5797566.	1000.0	588.61	1.427	1518.3	1.71820	1.44E+00
68 MIXR	5/IA	0	5797566.	915.8	428.72	1.352	1477.8	1.72366	1.87E+00
	180/IB	0	17159.	903.9	1710.97	1.513	1423.1	1.53943	4.25E-01
	68/U	0	5814725.	915.5	428.72	1.352	1477.6	1.72354	1.87E+00
69 MIXR	60/IA	0	2662136.	115.1	434.82	-0.452	84.2	0.15585	1.62E-02
	58/IB	0	2662136.	115.1	434.82	-0.452	84.2	0.15585	1.62E-02
	213/U	0	5324271.	115.1	434.82	-0.452	84.2	0.15585	1.62E-02
71 MIXR	334/IA	0	5274273.	165.4	185.44	-0.253	133.8	0.23979	1.64E-02
	134/IB	0	0.	117.3	236.13	-0.343	85.9	0.15983	1.62E-02
	71/U	0	5274273.	165.4	185.44	-0.253	133.8	0.23979	1.64E-02
72 MIXR	24/IA	0	5274273.	204.2	185.44	-0.207	172.7	0.30018	1.67E-02
	144/IB	0	0.	165.4	185.44	-0.253	133.8	0.23979	1.64E-02
	72/U	0	5274273.	204.2	185.44	-0.207	172.7	0.30018	1.67E-02
73 MIXR	72/IA	0	5274273.	204.2	185.44	-0.207	172.7	0.30018	1.67E-02
	197/IB	0	0.	350.7	135.75	0.000	322.5	0.50413	1.80E-02
	73/U	0	5274273.	204.2	185.44	-0.207	172.7	0.30018	1.67E-02
74 MIXR	25/IA	0	5274273.	271.0	185.44	-0.127	240.3	0.39726	1.72E-02
	147/IB	0	0.	204.2	185.44	-0.207	172.7	0.30018	1.67E-02
	74/U	0	5274273.	271.1	185.44	-0.127	240.3	0.39726	1.72E-02

IP7019254

** SAVE CASE **

COMPONENT PROPERTIES

COMP	STREAM /PORT	FLU ID	MASS FLOW (LBM/HR)	TEMP (F)	PRESS (PSIA)	QUALITY (R HUM) (-)	ENTH (B/LB)	ENTRPY (B/LB-F)	SPEC. VOLUME (FT3/LBM)
75 MIXR	26/IA	0	5274273.	299.7	135.61	-0.060	269.6	0.43677	1.74E-02
	150/IB	0	0.	271.1	185.44	-0.127	240.3	0.39726	1.72E-02
	75/U	0	5274273.	299.7	135.61	-0.060	269.6	0.43677	1.74E-02
80 MX51	57/IA	0	7720.	203.9	12.50	0.000	172.0	0.29996	1.67E-02
	63/IB	0	126636.	114.9	1.47	0.928	1037.7	1.81758	2.16E+02
	83/U	0	134357.	203.9	12.50	0.836	987.9	1.52954	2.61E+01
81 MX51	208/IA	0	138048.	200.4	11.62	0.847	997.2	1.55020	2.83E+01
	95/IB	0	0.	392.8	432.83	-0.084	367.5	0.55712	1.85E-02
	84/U	0	138048.	200.4	11.62	0.847	997.2	1.55020	2.83E+01
82 MX51	119/IA	0	0.	1000.0	2412.20	1.947	1461.2	1.53267	3.20E-01
	157/IB	0	2249.	996.7	2345.97	1.896	1461.2	1.53540	3.29E-01
	82/U	0	2249.	996.7	2345.97	1.896	1461.2	1.53540	3.29E-01
83 MX51	82/IA	0	2249.	996.7	2345.97	1.896	1461.2	1.53540	3.29E-01
	183/IB	0	8268.	633.4	630.88	1.145	1308.6	1.54495	9.36E-01
	86/U	0	10517.	702.6	780.55	1.203	1341.3	1.55257	8.08E-01
84 MX51	86/IA	0	10517.	702.6	780.55	1.203	1341.3	1.55257	8.08E-01
	186/IB	0	3962.	633.4	630.88	1.145	1308.6	1.54495	9.36E-01
	102/U	0	14479.	683.4	735.05	1.186	1332.3	1.55085	8.43E-01
85 MX51	102/IA	0	14479.	683.4	735.05	1.186	1332.3	1.55085	8.43E-01
	128/IB	0	4990.	627.0	138.51	1.169	1340.4	1.73354	4.58E+00
	85/U	0	19469.	641.8	346.05	1.163	1334.4	1.63022	1.81E+00
87 MX51	64/IA	0	131828.	95.0	0.82	0.948	1049.3	1.89891	3.84E+02
	220/IB	0	0.	281.1	68.66	-0.023	250.3	0.41138	1.73E-02
	87/U	0	131828.	95.0	0.82	0.948	1049.3	1.89891	3.84E+02
88 MX51	87/IA	0	131828.	95.0	0.82	0.948	1049.3	1.89891	3.84E+02
	218/IB	0	0.	214.2	44.00	-0.064	182.4	0.31541	1.67E-02
	88/U	0	131828.	95.0	0.82	0.948	1049.3	1.89891	3.84E+02
89 MX51	88/IA	0	131828.	95.0	0.82	0.948	1049.3	1.89891	3.84E+02
	145/IB	0	0.	175.4	10.28	-0.019	143.4	0.25587	1.65E-02
	89/U	0	131828.	95.0	0.82	0.948	1049.3	1.89891	3.84E+02

IP7019255

** SAVE CASE **

COMPONENT PROPERTIES

COMP	STREAM /PORT	FLU ID	MASS FLOW (LBM/HR)	TEMP (F)	PRESS (PSIA)	QUALITY (R HUM) (-)	ENTH (B/LB)	ENTRPY (B/LB-F)	SPEC. VOLUME (FT3/LBM)
90 MX51	89/IA	0	131828.	95.0	0.82	0.948	1049.3	1.89891	3.84E+02
	413/IB	0	0.	350.7	135.75	0.000	322.5	0.50413	1.80E-02
	90/U	0	131828.	95.0	0.82	0.948	1049.3	1.89891	3.84E+02
93 MX51	163/IA	0	0.	501.4	1087.24	-0.104	489.4	0.68892	2.04E-02
	176/IB	0	0.	501.6	1087.89	-0.104	489.6	0.68915	2.04E-02
	93/U	0	0.	501.5	1087.57	-0.104	489.5	0.68904	2.04E-02
94 M3WA	93/IA	0	0.	501.5	1087.57	-0.104	489.5	0.68904	2.04E-02
	175/IB	0	0.	416.4	624.90	-0.115	393.2	0.58607	1.88E-02
	164/IC	0	0.	416.5	623.81	-0.114	393.3	0.58619	1.88E-02
	94/U	0	0.	445.5	778.76	-0.116	425.3	0.62151	1.93E-02
95 M3WA	94/IA	0	0.	445.5	778.76	-0.116	425.3	0.62151	1.93E-02
	174/IB	0	0.	365.8	259.73	-0.050	338.6	0.52337	1.82E-02
	165/IC	0	0.	365.8	260.01	-0.050	338.6	0.52337	1.82E-02
	95/U	0	0.	392.8	432.83	-0.084	367.5	0.55712	1.85E-02
96 MX51	136/IA	0	5498.	633.4	630.88	1.145	1308.6	1.54495	9.36E-01
	130/IB	0	15200.	633.4	630.88	1.145	1308.6	1.54495	9.36E-01
	96/U	0	20697.	633.4	630.88	1.145	1308.6	1.54495	9.36E-01
97 MX51	28/IA	0	487328.	627.0	138.51	1.169	1340.4	1.73354	4.58E+00
	96/IB	0	20697.	633.4	630.88	1.145	1308.6	1.54495	9.36E-01
	97/U	0	508025.	624.5	138.51	1.167	1339.1	1.73234	4.57E+00
98 MX51	97/IA	0	508025.	624.5	138.51	1.167	1339.1	1.73234	4.57E+00
	222/IB	0	0.	1000.0	2412.20	1.947	1461.2	1.53267	3.20E-01
	98/U	0	508025.	624.5	138.51	1.167	1339.1	1.73234	4.57E+00
99 MX51	191/IA	0	0.	350.7	135.75	0.000	322.5	0.50413	1.80E-02
	223/IB	0	0.	350.7	135.75	0.000	322.5	0.50413	1.80E-02
	99/U	0	0.	350.7	135.75	0.000	322.5	0.50413	1.80E-02
100 MX51	109/IA	0	1567562.	365.8	260.01	-0.050	338.6	0.52337	1.82E-02
	99/IB	0	0.	350.7	135.75	0.000	322.5	0.50413	1.80E-02
	100/U	0	1567562.	365.8	260.01	-0.050	338.6	0.52337	1.82E-02
101 MIXR	43/IA	0	3545698.	351.1	298.05	-0.086	323.2	0.50437	1.80E-02
	42/IB	0	3545698.	351.1	298.05	-0.086	323.2	0.50437	1.80E-02

IP7019256

** SAVE CASE **

COMPONENT PROPERTIES

COMP	STREAM /PORT	FLU ID	MASS FLOW (LBM/HR)	TEMP (F)	PRESS (PSIA)	QUALITY (R HUM) (-)	ENTH (B/LB)	ENTRPY (B/LB-F)	SPEC. VOLUME (FT3/LBM)
106 MIXR	420/IA	0	3570698.	355.7	2829.65	-1.613	332.0	0.50488	1.78E-02
	76/IB	0	3570698.	355.7	2831.76	-1.618	332.0	0.50488	1.78E-02
	106/U	0	7141395.	355.7	2830.70	-1.616	332.0	0.50488	1.78E-02
109 MX51	110/IA	0	1567562.	365.8	260.01	-0.050	338.6	0.52337	1.82E-02
	204/IB	0	0.	351.1	298.05	-0.086	323.2	0.50437	1.80E-02
	109/U	0	1567562.	365.8	260.01	-0.050	338.6	0.52337	1.82E-02
110 MX51	111/IA	0	1567562.	365.8	260.01	-0.050	338.6	0.52337	1.82E-02
	205/IB	0	0.	355.7	2830.70	-1.616	332.0	0.50488	1.78E-02
	110/U	0	1567562.	365.8	260.01	-0.050	338.6	0.52337	1.82E-02
111 MX51	160/IA	0	783583.	365.8	260.01	-0.050	338.6	0.52337	1.82E-02
	173/IB	0	783979.	365.8	259.73	-0.050	338.6	0.52337	1.82E-02
	111/U	0	1567562.	365.8	260.01	-0.050	338.6	0.52337	1.82E-02
114 MIXR	33/IA	0	3570698.	556.9	2768.92	-0.721	554.9	0.74864	2.14E-02
	115/IB	0	3570698.	557.0	2768.91	-0.721	555.0	0.74873	2.14E-02
	114/U	0	7141395.	556.9	2768.92	-0.721	554.9	0.74869	2.14E-02
115 MIXR	46/IA	0	3570698.	557.0	2768.91	-0.721	555.0	0.74873	2.14E-02
	177/IB	0	0.	355.8	2796.59	-1.540	332.0	0.50502	1.78E-02
	115/U	0	3570698.	557.0	2768.91	-0.721	555.0	0.74873	2.14E-02
116 SDEM	59/I	0	7134261.	1000.0	2412.20	1.947	1461.2	1.53267	3.20E-01
	116/U	0	7134261.	1000.0	2412.20	1.947	1461.2	1.53267	3.20E-01
	119/B	0	0.	1000.0	2412.20	1.947	1461.2	1.53267	3.20E-01
117 SDEM	116/I	0	7134261.	1000.0	2412.20	1.947	1461.2	1.53267	3.20E-01
	117/U	0	7134261.	1000.0	2412.20	1.947	1461.2	1.53267	3.20E-01
	222/B	0	0.	1000.0	2412.20	1.947	1461.2	1.53267	3.20E-01
118 SVSL	54/I	0	7134261.	996.7	2345.97	1.896	1461.2	1.53540	3.29E-01
	118/U	0	7104351.	996.7	2345.97	1.896	1461.2	1.53540	3.29E-01
	125/B	0	29910.	996.7	2345.97	1.896	1461.2	1.53540	3.29E-01
119 SVSL	125/I	0	29910.	996.7	2345.97	1.896	1461.2	1.53540	3.29E-01
	122/U	0	27661.	996.7	2345.97	1.896	1461.2	1.53540	3.29E-01
	157/B	0	2249.	996.7	2345.97	1.896	1461.2	1.53540	3.29E-01

IP7019257

** SAVE CASE **

COMPONENT PROPERTIES

COMP	STREAM /PORT	FLU ID	MASS FLOW (LBM/HR)	TEMP (F)	PRESS (PSIA)	QUALITY (R HUM) (-)	ENTH (B/LB)	ENTRPY (B/LB-F)	SPEC. VOLUME (FT3/LBM)
120 SSPL	1/I	0	7104351.	903.9	1710.97	1.513	1423.1	1.53943	4.25E-01
	120/U	0	7087192.	903.9	1710.97	1.513	1423.1	1.53943	4.25E-01
	180/B	0	17159.	903.9	1710.97	1.513	1423.1	1.53943	4.25E-01
121 SSPL	4/I	0	6463066.	633.4	630.88	1.145	1308.6	1.54495	9.36E-01
	121/U	0	6439598.	633.4	630.88	1.145	1308.6	1.54495	9.36E-01
	123/B	0	23467.	633.4	630.88	1.145	1308.6	1.54495	9.36E-01
122 SSPL	122/I	0	27661.	996.7	2345.97	1.896	1461.2	1.53540	3.29E-01
	131/U	0	25150.	996.7	2345.97	1.896	1461.2	1.53540	3.29E-01
	156/B	0	2511.	996.7	2345.97	1.896	1461.2	1.53540	3.29E-01
123 SSPL	123/I	0	23467.	633.4	630.88	1.145	1308.6	1.54495	9.36E-01
	130/U	0	15200.	633.4	630.88	1.145	1308.6	1.54495	9.36E-01
	183/B	0	8268.	633.4	630.88	1.145	1308.6	1.54495	9.36E-01
124 SSPL	121/I	0	6439598.	633.4	630.88	1.145	1308.6	1.54495	9.36E-01
	124/U	0	6430139.	633.4	630.88	1.145	1308.6	1.54495	9.36E-01
	184/B	0	9459.	633.4	630.88	1.145	1308.6	1.54495	9.36E-01
125 SSPL	184/I	0	9459.	633.4	630.88	1.145	1308.6	1.54495	9.36E-01
	136/U	0	5498.	633.4	630.88	1.145	1308.6	1.54495	9.36E-01
	186/B	0	3962.	633.4	630.88	1.145	1308.6	1.54495	9.36E-01
126 SDEM	66/I	0	6454031.	634.3	630.88	1.145	1309.2	1.54550	9.38E-01
	126/U	0	5795056.	634.3	630.88	1.145	1309.2	1.54550	9.38E-01
	171/B	0	658975.	634.3	630.88	1.145	1309.2	1.54550	9.38E-01
127 SSPL	777/I	0	5042936.	627.0	138.51	1.169	1340.4	1.73354	4.58E+00
	127/U	0	5036684.	627.0	138.51	1.169	1340.4	1.73354	4.58E+00
	148/B	0	6252.	627.0	138.51	1.169	1340.4	1.73354	4.58E+00
128 SSPL	124/I	0	6430139.	633.4	630.88	1.145	1308.6	1.54495	9.36E-01
	137/U	0	6428881.	633.4	630.88	1.145	1308.6	1.54495	9.36E-01
	47/B	0	1258.	633.4	630.88	1.145	1308.6	1.54495	9.36E-01
129 SFIX	148/I	0	6252.	627.0	138.51	1.169	1340.4	1.73354	4.58E+00
	128/U	0	4990.	627.0	138.51	1.169	1340.4	1.73354	4.58E+00
	181/B	0	1262.	627.0	138.51	1.169	1340.4	1.73354	4.58E+00

IP7019258

** SAVE CASE **

COMPONENT PROPERTIES

COMP	STREAM /PORT	FLU ID	MASS FLOW (LBM/HR)	TEMP (F)	PRESS (PSIA)	QUALITY (R HUM) (-)	ENTH (B/LB)	ENTRPY (B/LB-F)	SPEC. VOLUME (FT3/LBM)
131 SPCT	22/I	0	5324271.	114.9	1.47	0.000	82.9	0.15583	1.62E-02
	135/U	0	2662136.	114.9	1.47	0.000	82.9	0.15583	1.62E-02
	212/B	0	2662136.	114.9	1.47	0.000	82.9	0.15583	1.62E-02
132 MX51	215/IA	0	3780975.	98.6	0.92	-0.000	66.7	0.12720	1.61E-02
	227/IB	0	145183.	200.4	11.62	0.799	949.6	1.47805	2.67E+01
	132/U	0	3926158.	131.3	11.46	-0.070	99.3	0.18394	1.63E-02
133 SPCT	30/I	0	5274273.	117.3	236.13	-0.343	85.9	0.15983	1.62E-02
	133/U	0	5274273.	117.3	236.13	-0.343	85.9	0.15983	1.62E-02
	134/B	0	0.	117.3	236.13	-0.343	85.9	0.15983	1.62E-02
134 SPCT	71/I	0	5274273.	165.4	185.44	-0.253	133.8	0.23979	1.64E-02
	138/U	0	5274273.	165.4	185.44	-0.253	133.8	0.23979	1.64E-02
	144/B	0	0.	165.4	185.44	-0.253	133.8	0.23979	1.64E-02
135 SPCT	73/I	0	5274273.	204.2	185.44	-0.207	172.7	0.30018	1.67E-02
	139/U	0	5274273.	204.2	185.44	-0.207	172.7	0.30018	1.67E-02
	147/B	0	0.	204.2	185.44	-0.207	172.7	0.30018	1.67E-02
136 SPCT	74/I	0	5274273.	271.1	185.44	-0.127	240.3	0.39726	1.72E-02
	140/U	0	5274273.	271.1	185.44	-0.127	240.3	0.39726	1.72E-02
	150/B	0	0.	271.1	185.44	-0.127	240.3	0.39726	1.72E-02
137 SPCT	52/I	0	148025.	281.1	68.66	-0.023	250.3	0.41138	1.73E-02
	219/U	0	148025.	281.1	68.66	-0.023	250.3	0.41138	1.73E-02
	220/B	0	0.	281.1	68.66	-0.023	250.3	0.41138	1.73E-02
138 SPCT	51/I	0	472538.	214.2	44.00	-0.064	182.4	0.31541	1.67E-02
	149/U	0	472538.	214.2	44.00	-0.064	182.4	0.31541	1.67E-02
	218/B	0	0.	214.2	44.00	-0.064	182.4	0.31541	1.67E-02
139 SPCT	50/I	0	654984.	175.4	10.28	-0.019	143.4	0.25587	1.65E-02
	146/U	0	654984.	175.4	10.28	-0.019	143.4	0.25587	1.65E-02
	145/B	0	0.	175.4	10.28	-0.019	143.4	0.25587	1.65E-02
140 MX51	18/IA	0	2391915.	95.0	0.82	0.000	63.0	0.12059	1.61E-02
	20/IB	0	1389060.	104.9	1.10	0.000	72.9	0.13833	1.61E-02
	215/U	0	3780975.	98.6	0.92	-0.000	66.7	0.12720	1.61E-02

IP7019259

** SAVE CASE **

COMPONENT PROPERTIES

COMP	STREAM /PORT	FLU ID	MASS FLOW (LBM/HR)	TEMP (F)	PRESS (PSIA)	QUALITY (R HUM) (-)	ENTH (B/LB)	ENTRPY (B/LB-F)	SPEC. VOLUME (FT3/LBM)
141 SSSR	182/I	0	14269.	641.8	346.05	1.163	1334.4	1.63022	1.81E+00
	141/U	0	3692.	596.8	5.00	1.203	1334.4	2.09192	1.26E+02
	211/B	0	10577.	596.8	5.00	1.203	1334.4	2.09192	1.26E+02
142 SDEM	143/I	0	381389.	624.5	138.51	1.167	1339.1	1.73234	4.57E+00
	142/U	0	249561.	624.5	138.51	1.167	1339.1	1.73234	4.57E+00
	151/B	0	131828.	624.5	138.51	1.167	1339.1	1.73234	4.57E+00
143 SDEM	98/I	0	508025.	624.5	138.51	1.167	1339.1	1.73234	4.57E+00
	143/U	0	381389.	624.5	138.51	1.167	1339.1	1.73234	4.57E+00
	152/B	0	126636.	624.5	138.51	1.167	1339.1	1.73234	4.57E+00
144 SFIX	27/I	0	7091397.	350.7	135.75	0.000	322.5	0.50413	1.80E-02
	193/U	0	7091397.	350.7	135.75	0.000	322.5	0.50413	1.80E-02
	192/B	0	0.	350.7	135.75	0.000	322.5	0.50413	1.80E-02
145 SFIX	193/I	0	7091397.	350.7	135.75	0.000	322.5	0.50413	1.80E-02
	207/U	0	7091397.	350.7	135.75	0.000	322.5	0.50413	1.80E-02
	194/B	0	0.	350.7	135.75	0.000	322.5	0.50413	1.80E-02
146 SPCT	55/I	0	0.	350.7	135.75	0.000	322.5	0.50413	1.80E-02
	187/U	0	0.	350.7	135.75	0.000	322.5	0.50413	1.80E-02
	191/B	0	0.	350.7	135.75	0.000	322.5	0.50413	1.80E-02
147 SPCT	418/I	0	0.	350.7	135.75	0.000	322.5	0.50413	1.80E-02
	197/U	0	0.	350.7	135.75	0.000	322.5	0.50413	1.80E-02
	223/B	0	0.	350.7	135.75	0.000	322.5	0.50413	1.80E-02
148 SPCT	207/I	0	7091397.	350.7	135.75	0.000	322.5	0.50413	1.80E-02
	196/U	0	3545698.	350.7	135.75	0.000	322.5	0.50413	1.80E-02
	200/B	0	3545698.	350.7	135.75	0.000	322.5	0.50413	1.80E-02
150 SPCT	101/I	0	7091397.	351.1	298.05	-0.086	323.2	0.50437	1.80E-02
	600/U	0	7091397.	351.1	298.05	-0.086	323.2	0.50437	1.80E-02
	204/B	0	0.	351.1	298.05	-0.086	323.2	0.50437	1.80E-02
151 SPCT	31/I	0	5274273.	124.5	236.13	-0.334	93.1	0.17215	1.62E-02
	154/U	0	1758443.	124.5	236.13	-0.334	93.1	0.17215	1.62E-02
	155/B	0	1757915.	124.5	236.13	-0.334	93.1	0.17215	1.62E-02
	153/C	0	1757915.	124.5	236.13	-0.334	93.1	0.17215	1.62E-02

IP7019260

** SAVE CASE **

COMPONENT PROPERTIES

COMP	STREAM /PORT	FLU ID	MASS FLOW (LBM/HR)	TEMP (F)	PRESS (PSIA)	QUALITY (R HUM) (-)	ENTH (B/LB)	ENTRPY (B/LB-F)	SPEC. VOLUME (FT3/LBM)
153 SPCT	201/I	0	7141395.	349.5	298.05	-0.088	321.5	0.50231	1.80E-02
	202/U	0	3570698.	349.5	298.05	-0.088	321.5	0.50231	1.80E-02
	203/B	0	3570698.	349.5	298.05	-0.088	321.5	0.50231	1.80E-02
155 SPCT	106/I	0	7141395.	355.7	2830.70	-1.616	332.0	0.50488	1.78E-02
	608/U	0	7141395.	355.7	2830.70	-1.616	332.0	0.50488	1.78E-02
	205/B	0	0.	355.7	2830.70	-1.616	332.0	0.50488	1.78E-02
158 SPCT	159/I	0	7141395.	355.8	2785.34	-1.516	332.0	0.50503	1.78E-02
	172/U	0	3570698.	355.8	2785.34	-1.516	332.0	0.50503	1.78E-02
	158/B	0	3570698.	355.8	2785.34	-1.516	332.0	0.50503	1.78E-02
159 SPCT	612/I	0	7141395.	355.8	2796.59	-1.540	332.0	0.50502	1.78E-02
	159/U	0	7141395.	355.8	2796.59	-1.540	332.0	0.50502	1.78E-02
	177/B	0	0.	355.8	2796.59	-1.540	332.0	0.50502	1.78E-02
160 SPCT	37/I	0	783583.	365.8	260.01	-0.050	338.6	0.52337	1.82E-02
	160/U	0	783583.	365.8	260.01	-0.050	338.6	0.52337	1.82E-02
	165/B	0	0.	365.8	260.01	-0.050	338.6	0.52337	1.82E-02
161 SPCT	36/I	0	641201.	416.5	623.81	-0.114	393.3	0.58619	1.88E-02
	161/U	0	641201.	416.5	623.81	-0.114	393.3	0.58619	1.88E-02
	164/B	0	0.	416.5	623.81	-0.114	393.3	0.58619	1.88E-02
162 SPCT	35/I	0	312276.	501.4	1087.24	-0.104	489.4	0.68892	2.04E-02
	162/U	0	312276.	501.4	1087.24	-0.104	489.4	0.68892	2.04E-02
	163/B	0	0.	501.4	1087.24	-0.104	489.4	0.68892	2.04E-02
163 SPCT	45/I	0	783979.	365.8	259.73	-0.050	338.6	0.52337	1.82E-02
	173/U	0	783979.	365.8	259.73	-0.050	338.6	0.52337	1.82E-02
	174/B	0	0.	365.8	259.73	-0.050	338.6	0.52337	1.82E-02
164 SPCT	40/I	0	641901.	416.4	624.90	-0.115	393.2	0.58607	1.88E-02
	179/U	0	641901.	416.4	624.90	-0.115	393.2	0.58607	1.88E-02
	175/B	0	0.	416.4	624.90	-0.115	393.2	0.58607	1.88E-02
165 SPCT	39/I	0	311850.	501.6	1087.89	-0.104	489.6	0.68915	2.04E-02
	178/U	0	311850.	501.6	1087.89	-0.104	489.6	0.68915	2.04E-02
	176/B	0	0.	501.6	1087.89	-0.104	489.6	0.68915	2.04E-02

IP7019261

** SAVE CASE **

COMPONENT PROPERTIES

COMP	STREAM /PORT	FLU ID	MASS FLOW (LBM/HR)	TEMP (F)	PRESS (PSIA)	QUALITY (R HUM) (-)	ENTH (B/LB)	ENTRPY (B/LB-F)	SPEC. VOLUME (FT3/LBM)
166 SDEM	403/I	0	284461.	799.0	262.10	1.268	1422.3	1.73458	2.80E+00
	166/U	0	142383.	799.0	262.10	1.268	1422.3	1.73458	2.80E+00
	224/B	0	142078.	799.0	262.10	1.268	1422.3	1.73458	2.80E+00
167 SDEM	402/I	0	658975.	634.3	630.88	1.145	1309.2	1.54550	9.38E-01
	167/U	0	328925.	634.3	630.88	1.145	1309.2	1.54550	9.38E-01
	170/B	0	330051.	634.3	630.88	1.145	1309.2	1.54550	9.38E-01
168 SDEM	401/I	0	624126.	780.4	1097.86	1.289	1371.7	1.54384	6.07E-01
	168/U	0	312276.	780.4	1097.86	1.289	1371.7	1.54384	6.07E-01
	169/B	0	311850.	780.4	1097.86	1.289	1371.7	1.54384	6.07E-01
173 SFIX	85/I	0	19469.	641.8	346.05	1.163	1334.4	1.63022	1.81E+00
	182/U	0	14269.	641.8	346.05	1.163	1334.4	1.63022	1.81E+00
	48/B	0	5200.	641.8	346.05	1.163	1334.4	1.63022	1.81E+00
174 MX51	83/IA	0	134357.	203.9	12.50	0.836	987.9	1.52954	2.61E+01
	141/IB	0	3692.	596.8	5.00	1.203	1334.4	2.09192	1.26E+02
	208/U	0	138048.	200.4	11.62	0.847	997.2	1.55020	2.83E+01
175 MX51	417/IA	0	138048.	200.4	11.62	0.847	997.2	1.55020	2.83E+01
	214/IB	0	7134.	60.0	15.00	-0.157	28.1	0.05561	1.60E-02
	227/U	0	145183.	200.4	11.62	0.799	949.6	1.47805	2.67E+01
176 SRCE	214/U	0	7134.	60.0	15.00	-0.157	28.1	0.05561	1.60E-02
219 FWH	155/T	0	1757915.	124.5	236.13	-0.334	93.1	0.17215	1.62E-02
	450/S	0	72884.	186.2	5.76	1.008	1141.7	1.84576	6.64E+01
	225/T	0	1757915.	166.2	236.13	-0.284	134.7	0.24106	1.64E-02
	226/D	0	72884.	168.2	5.76	0.000	136.2	0.24449	1.64E-02
301 MX51	69/IA	0	649929.	167.7	5.70	-0.000	135.7	0.24370	1.64E-02
	226/IB	0	72884.	168.2	5.76	0.000	136.2	0.24449	1.64E-02
	301/U	0	722813.	167.8	5.70	-0.000	135.7	0.24378	1.64E-02
302 MX51	301/IA	0	722813.	167.8	5.70	-0.000	135.7	0.24378	1.64E-02
	21/IB	0	71799.	166.2	5.50	0.000	134.2	0.24131	1.64E-02
	302/U	0	794611.	167.6	5.68	-0.000	135.6	0.24356	1.64E-02
303 MX51	302/IA	0	794611.	167.6	5.68	0.000	135.6	0.24356	1.64E-02

IP7019262

** SAVE CASE **

COMPONENT PROPERTIES

COMP	STREAM /PORT	FLU ID	MASS FLOW (LBM/HR)	TEMP (F)	PRESS (PSIA)	QUALITY (R HUM) (-)	ENTH (B/LB)	ENTRPY (B/LB-F)	SPEC. VOLUME (FT3/LBM)
305 SPCT	10/I	0	4381700.	223.5	13.82	1.007	1156.3	1.77216	2.91E+01
	305/U	0	1460859.	223.5	13.82	1.007	1156.3	1.77216	2.91E+01
	306/B	0	1460421.	223.5	13.82	1.007	1156.3	1.77216	2.91E+01
	307/C	0	1460421.	223.5	13.82	1.007	1156.3	1.77216	2.91E+01
319 FWH	153/T	0	1757915.	124.5	236.13	-0.334	93.1	0.17215	1.62E-02
	999/S	0	73658.	167.3	5.64	0.976	1109.8	1.79727	6.41E+01
	319/T	0	1757915.	165.3	236.13	-0.285	133.9	0.23969	1.64E-02
	321/D	0	73658.	167.3	5.64	0.000	135.3	0.24312	1.64E-02
334 M3WA	19/IA	0	1758443.	164.2	236.13	-0.286	132.8	0.23788	1.64E-02
	225/IB	0	1757915.	166.2	236.13	-0.284	134.7	0.24106	1.64E-02
	319/IC	0	1757915.	165.3	236.13	-0.285	133.9	0.23969	1.64E-02
	334/U	0	5274273.	165.3	236.13	-0.285	133.8	0.23954	1.64E-02
400 SINK	609/I	0	0.	355.7	2830.70	-1.616	332.0	0.50488	1.78E-02
401 SFIX	684/I	0	624126.	780.4	1097.86	1.289	1371.7	1.54384	6.07E-01
	401/U	0	624126.	780.4	1097.86	1.289	1371.7	1.54384	6.07E-01
	407/B	0	0.	780.4	1097.86	1.289	1371.7	1.54384	6.07E-01
402 SFIX	171/I	0	658975.	634.3	630.88	1.145	1309.2	1.54550	9.38E-01
	402/U	0	658975.	634.3	630.88	1.145	1309.2	1.54550	9.38E-01
	408/B	0	0.	634.3	630.88	1.145	1309.2	1.54550	9.38E-01
403 SFIX	411/I	0	284461.	799.0	262.10	1.268	1422.3	1.73458	2.80E+00
	403/U	0	284461.	799.0	262.10	1.268	1422.3	1.73458	2.80E+00
	409/B	0	0.	799.0	262.10	1.268	1422.3	1.73458	2.80E+00
404 MX51	84/IA	0	138048.	200.4	11.62	0.847	997.2	1.55020	2.83E+01
	407/IB	0	0.	780.4	1097.86	1.289	1371.7	1.54384	6.07E-01
	414/U	0	138048.	200.4	11.62	0.847	997.2	1.55020	2.83E+01
405 MX51	414/IA	0	138048.	200.4	11.62	0.847	997.2	1.55020	2.83E+01
	408/IB	0	0.	634.3	630.88	1.145	1309.2	1.54550	9.38E-01
	419/U	0	138048.	200.4	11.62	0.847	997.2	1.55020	2.83E+01
406 MX51	419/IA	0	138048.	200.4	11.62	0.847	997.2	1.55020	2.83E+01
	409/IB	0	0.	799.0	262.10	1.268	1422.3	1.73458	2.80E+00
	417/U	0	138048.	200.4	11.62	0.847	997.2	1.55020	2.83E+01

IP7019263

** SAVE CASE **

COMPONENT PROPERTIES

COMP	STREAM /PORT	FLU ID	MASS FLOW (LBM/HR)	TEMP (F)	PRESS (PSIA)	QUALITY (R HUM) (-)	ENTH (B/LB)	ENTRPY (B/LB-F)	SPEC. VOLUME (FT3/LBM)
413 SFIX	187/I	0	0.	350.7	135.75	0.000	322.5	0.50413	1.80E-02
	413/U	0	0.	350.7	135.75	0.000	322.5	0.50413	1.80E-02
	421/B	0	0.	350.7	135.75	0.000	322.5	0.50413	1.80E-02
415 SFIX	56/I	0	0.	350.7	135.75	0.000	322.5	0.50413	1.80E-02
	418/U	0	0.	350.7	135.75	0.000	322.5	0.50413	1.80E-02
	416/B	0	0.	350.7	135.75	0.000	322.5	0.50413	1.80E-02
416 SINK	416/I	0	0.	350.7	135.75	0.000	322.5	0.50413	1.80E-02
417 SINK	421/I	0	0.	350.7	135.75	0.000	322.5	0.50413	1.80E-02
450 MX51	12/IA	0	62307.	170.0	5.99	0.975	1109.0	1.78954	6.05E+01
	211/IB	0	10577.	596.8	5.00	1.203	1334.4	2.09192	1.26E+02
	450/U	0	72884.	186.5	5.99	1.007	1141.7	1.84133	6.37E+01
600 MIXR	600/IA	0	7091397.	351.1	298.05	-0.086	323.2	0.50437	1.80E-02
	61/IB	0	49998.	115.1	434.82	-0.452	84.2	0.15585	1.62E-02
	199/U	0	7141395.	349.5	298.05	-0.088	321.5	0.50231	1.80E-02
608 SFIX	608/I	0	7141395.	355.7	2830.70	-1.616	332.0	0.50488	1.78E-02
	611/U	0	7141395.	355.7	2830.70	-1.616	332.0	0.50488	1.78E-02
	609/B	0	0.	355.7	2830.70	-1.616	332.0	0.50488	1.78E-02
609 SFIX	611/I	0	7141395.	355.7	2830.70	-1.616	332.0	0.50488	1.78E-02
	612/U	0	7141395.	355.7	2830.70	-1.616	332.0	0.50488	1.78E-02
	610/B	0	0.	355.7	2830.70	-1.616	332.0	0.50488	1.78E-02
610 MX51	126/IA	0	5795056.	634.3	630.88	1.145	1309.2	1.54550	9.38E-01
	610/IB	0	0.	355.7	2830.70	-1.616	332.0	0.50488	1.78E-02
	613/U	0	5795056.	634.3	630.88	1.145	1309.2	1.54550	9.38E-01
781 M3WA	90/IA	0	131828.	95.0	0.82	0.948	1049.3	1.89891	3.84E+02
	49/IB	0	868269.	124.1	5.68	-0.043	92.1	0.17173	1.62E-02
	44/IC	0	0.	349.5	298.05	-0.088	321.5	0.50231	1.80E-02
	781/U	0	1000097.	95.0	0.82	0.149	218.3	0.40053	6.03E+01
999 MX51	81/IA	0	68603.	167.7	5.69	0.975	1108.1	1.79366	6.35E+01
	70/IB	0	5055.	167.8	5.70	0.999	1133.0	1.83315	6.51E+01
	999/U	0	73658.	167.7	5.69	0.976	1109.8	1.79638	6.36E+01

IP7019264

** SAVE CASE **

STREAM PROPERTIES

STRM NO.	STRM TYPE	COMP FRM/TO ID	FLU ID	MASS FLOW (LBM/HR)	TEMP (F)	PRESS (PSIA)	QUAL (HUM) (-)	ENTH (B/LB)	ENTRPY (B/LB-F)	SPEC. VOLUME (FT3/LBM)
1	0	1-U (+)	0	7104351.	903.9	1710.97	1.513	1423.1	1.53943	4.249E-01
		120-I (-)			903.9	1710.97	1.513	1423.1	1.53943	4.249E-01
3	0	3-U (+)	0	6463066.	780.8	1103.37	1.290	1371.7	1.54335	6.038E-01
		4-I (-)			780.8	1103.37	1.290	1371.7	1.54335	6.038E-01
4	0	4-U (+)	0	6463066.	633.4	630.88	1.145	1308.6	1.54495	9.365E-01
		121-I (-)			633.4	630.88	1.145	1308.6	1.54495	9.365E-01
5	0	5-U (+)	0	5797566.	915.8	428.72	1.352	1477.8	1.72366	1.866E+00
		68-IA(-)			915.8	428.72	1.352	1477.8	1.72366	1.866E+00
7	0	6-U (+)	0	5530264.	785.6	265.07	1.259	1415.2	1.72768	2.738E+00
		7-I (-)			785.6	265.07	1.259	1415.2	1.72768	2.738E+00
8	0	8-U (+)	0	4888659.	495.0	69.98	1.108	1279.7	1.74794	7.997E+00
		9-I (-)			495.0	69.98	1.108	1279.7	1.74794	7.997E+00
9	0	9-U (+)	0	4564146.	419.5	45.86	1.078	1245.3	1.75619	1.125E+01
		10-I (-)			419.5	45.86	1.078	1245.3	1.75619	1.125E+01
10	0	10-U (+)	0	4381700.	223.5	13.82	1.007	1156.3	1.77216	2.906E+01
		305-I (-)			223.5	13.82	1.007	1156.3	1.77216	2.906E+01
11	0	11-U (+)	0	1398114.	170.5	6.07	0.974	1109.0	1.78826	5.980E+01
		14-I (-)			170.5	6.07	0.974	1109.0	1.78826	5.980E+01
12	0	11-E (+)	0	62307.	170.0	5.99	0.975	1109.0	1.78954	6.049E+01
		450-IA(-)			170.0	5.99	0.975	1109.0	1.78954	6.049E+01
13	0	13-U (+)	0	1389060.	104.9	1.10	0.935	1040.3	1.85168	2.852E+02
		17-S (-)			104.9	1.10	0.935	1040.3	1.85168	2.852E+02
14	0	14-U (+)	0	1398114.	114.9	1.47	0.935	1045.0	1.83036	2.173E+02
		18-S (-)			114.9	1.47	0.935	1045.0	1.83036	2.173E+02
* 15	0	15-T (+)	0	5795056.	1000.0	588.61	1.427	1518.4	1.71821	1.439E+00
		67-IA(-)			1000.0	588.61	1.427	1518.4	1.71821	1.439E+00

IP7019265

STREAM PROPERTIES

STRM NO.	STRM TYPE	COMP FRM/TO ID	FLU ID	MASS FLOW (LBM/HR)	TEMP (F)	PRESS (PSIA)	QUAL (HUM) (-)	ENTH (B/LB)	ENTRPY (B/LB-F)	SPEC. VOLUME (FT3/LBM)
16	0	12-U (+)	0	1391818.	95.0	0.82	0.938	1039.0	1.88031	3.796E+02
		16-S (-)			95.0	0.82	0.938	1039.0	1.88031	3.796E+02
17	0	17-T (+)	0	47878545.	109.0	50.00	-0.187	77.1	0.14554	1.616E-02
		62-IB(-)			109.0	50.00	-0.187	77.1	0.14554	1.616E-02
18	0	16-D (+)	0	2391915.	95.0	0.82	0.000	63.0	0.12059	1.612E-02
		140-IA(-)			95.0	0.82	0.000	63.0	0.12059	1.612E-02
19	0	19-T (+)	0	1758443.	164.2	236.13	-0.286	132.8	0.23788	1.640E-02
		334-IA(-)			164.2	236.13	-0.286	132.8	0.23788	1.640E-02
20	0	17-D (+)	0	1389060.	104.9	1.10	0.000	72.9	0.13833	1.615E-02
		140-IB(-)			104.9	1.10	0.000	72.9	0.13833	1.615E-02
21	0	19-D (+)	0	71799.	166.2	5.50	0.000	134.2	0.24131	1.643E-02
		302-IB(-)			166.2	5.50	0.000	134.2	0.24131	1.643E-02
22	0	18-D (+)	0	5324271.	114.9	1.47	0.000	82.9	0.15583	1.618E-02
		131-I (-)			114.9	1.47	0.000	82.9	0.15583	1.618E-02
23	2	16-T (+)	0	95771455.	96.9	50.00	-0.200	65.0	0.12399	1.612E-02
		18-T (-)			95.1	50.00	-0.202	63.3	0.12088	1.611E-02
24	0	20-T (+)	0	5274273.	204.2	185.44	-0.207	172.7	0.30018	1.665E-02
		72-IA(-)			204.2	185.44	-0.207	172.7	0.30018	1.665E-02
25	0	21-T (+)	0	5274273.	271.0	185.44	-0.127	240.3	0.39726	1.717E-02
		74-IA(-)			271.0	185.44	-0.127	240.3	0.39726	1.717E-02
26	2	22-T (+)	0	5274273.	299.6	185.44	-0.093	269.6	0.43656	1.744E-02
		75-IA(-)			299.7	135.61	-0.060	269.6	0.43677	1.744E-02
27	0	23-D (+)	0	7091397.	350.7	135.75	0.000	322.5	0.50413	1.800E-02
		144-I (-)			350.7	135.75	0.000	322.5	0.50413	1.800E-02
28	0	7-E (+)	0	487328.	627.0	138.51	1.169	1340.4	1.73354	4.584E+00
		97-IA(-)			627.0	138.51	1.169	1340.4	1.73354	4.584E+00

IP7019266

STREAM PROPERTIES

STRM NO.	STRM TYPE	COMP FRM/TO ID	FLU ID	MASS FLOW (LBM/HR)	TEMP (F)	PRESS (PSIA)	QUAL (HUM) (-)	ENTH (B/LB)	ENTRPY (B/LB-F)	SPEC. VOLUME (FT3/LBM)
30	2	30-T (+)	0	5274273.	116.8	434.82	-0.450	85.9	0.15880	1.617E-02
		133-I (-)			117.3	236.13	-0.343	85.9	0.15983	1.618E-02
31	0	31-T (+)	0	5274273.	124.5	236.13	-0.334	93.1	0.17215	1.621E-02
		151-I (-)			124.5	236.13	-0.334	93.1	0.17215	1.621E-02
32	2	26-T (+)	0	3570698.	491.5	2774.78	-0.994	477.7	0.67020	1.983E-02
		28-T (-)			491.4	2768.92	-0.985	477.7	0.67021	1.983E-02
33	0	28-T (+)	0	3570698.	556.9	2768.92	-0.721	554.9	0.74864	2.139E-02
		114-IA(-)			556.9	2768.92	-0.721	554.9	0.74864	2.139E-02
34	2	24-T (+)	0	3570698.	406.5	2785.34	-1.332	385.0	0.56811	1.845E-02
		26-T (-)			406.5	2774.78	-1.313	385.0	0.56812	1.845E-02
35	0	28-D (+)	0	312276.	501.4	1087.24	-0.104	489.4	0.68892	2.038E-02
		162-I (-)			501.4	1087.24	-0.104	489.4	0.68892	2.038E-02
36	0	26-D (+)	0	641201.	416.5	623.81	-0.114	393.3	0.58619	1.884E-02
		161-I (-)			416.5	623.81	-0.114	393.3	0.58619	1.884E-02
37	0	24-D (+)	0	783583.	365.8	260.01	-0.050	338.6	0.52337	1.817E-02
		160-I (-)			365.8	260.01	-0.050	338.6	0.52337	1.817E-02
38	2	25-T (+)	0	3570698.	406.4	2785.34	-1.332	384.9	0.56800	1.844E-02
		27-T (-)			406.4	2774.78	-1.313	384.9	0.56801	1.845E-02
39	0	29-D (+)	0	311850.	501.6	1087.89	-0.104	489.6	0.68915	2.039E-02
		165-I (-)			501.6	1087.89	-0.104	489.6	0.68915	2.039E-02
40	0	27-D (+)	0	641901.	416.4	624.90	-0.115	393.2	0.58607	1.884E-02
		164-I (-)			416.4	624.90	-0.115	393.2	0.58607	1.884E-02
41	2	27-T (+)	0	3570698.	491.6	2774.78	-0.993	478.0	0.67043	1.983E-02
		29-T (-)			491.6	2768.91	-0.984	477.9	0.67044	1.983E-02
42	0	34-U (+)	0	3545698.	351.1	298.05	-0.086	323.2	0.50437	1.799E-02
		101-IB(-)			351.1	298.05	-0.086	323.2	0.50437	1.799E-02

IP7019267

** SAVE CASE **

STREAM PROPERTIES

STRM NO.	STRM TYPE	COMP FRM/TO ID	FLU ID	MASS FLOW (LBM/HR)	TEMP (F)	PRESS (PSIA)	QUAL (HUM) (-)	ENTH (B/LB)	ENTRPY (B/LB-F)	SPEC. VOLUME (FT3/LBM)
43	0	35-U (+)	0	3545698.	351.1	298.05	-0.086	323.2	0.50437	1.799E-02
		101-IA(-)			351.1	298.05	-0.086	323.2	0.50437	1.799E-02
44	0	36-B (+)	0	0.	349.5	298.05	-0.088	321.5	0.50231	1.797E-02
		781-IC(-)			349.5	298.05	-0.088	321.5	0.50231	1.797E-02
45	0	25-D (+)	0	783979.	365.8	259.73	-0.050	338.6	0.52337	1.817E-02
		163-I (-)			365.8	259.73	-0.050	338.6	0.52337	1.817E-02
46	0	29-T (+)	0	3570698.	557.0	2768.91	-0.721	555.0	0.74873	2.139E-02
		115-IA(-)			557.0	2768.91	-0.721	555.0	0.74873	2.139E-02
47	0	128-B (+)	0	1258.	633.4	630.88	1.145	1308.6	1.54495	9.365E-01
		40-IB(-)			633.4	630.88	1.145	1308.6	1.54495	9.365E-01
48	0	173-B (+)	0	5200.	641.8	346.05	1.163	1334.4	1.63022	1.807E+00
		40-IA(-)			641.8	346.05	1.163	1334.4	1.63022	1.807E+00
49	0	31-D (+)	0	868269.	124.1	5.68	-0.043	92.1	0.17173	1.622E-02
		781-IB(-)			124.1	5.68	-0.043	92.1	0.17173	1.622E-02
50	2	20-D (+)	0	654984.	175.4	13.09	-0.031	143.4	0.25586	1.648E-02
		139-I (-)			175.4	10.28	-0.019	143.4	0.25587	1.648E-02
51	0	21-D (+)	0	472538.	214.2	44.00	-0.064	182.4	0.31541	1.673E-02
		138-I (-)			214.2	44.00	-0.064	182.4	0.31541	1.673E-02
52	0	22-D (+)	0	148025.	281.1	68.66	-0.023	250.3	0.41138	1.727E-02
		137-I (-)			281.1	68.66	-0.023	250.3	0.41138	1.727E-02
54	0	39-U (+)	0	7134261.	996.7	2345.97	1.896	1461.2	1.53540	3.291E-01
		118-I (-)			996.7	2345.97	1.896	1461.2	1.53540	3.291E-01
55	0	32-T (+)	0	0.	350.7	135.75	0.000	322.5	0.50413	1.800E-02
		146-I (-)			350.7	135.75	0.000	322.5	0.50413	1.800E-02
56	0	33-T (+)	0	0.	350.7	135.75	0.000	322.5	0.50413	1.800E-02
		415-I (-)			350.7	135.75	0.000	322.5	0.50413	1.800E-02

IP7019268

STREAM PROPERTIES

STRM NO.	STRM TYPE	COMP FRM/TO ID	FLU ID	MASS FLOW (LBM/HR)	TEMP (F)	PRESS (PSIA)	QUAL (HUM) (-)	ENTH (B/LB)	ENTRPY (B/LB-F)	SPEC. VOLUME (FT3/LBM)
* 57	0	30-D (+)	0	7720.	203.9	12.50	0.000	172.0	0.29996	1.666E-02
		80-IA(-)			203.9	12.50	0.000	172.0	0.29996	1.666E-02
58	0	42-U (+)	0	2662136.	115.1	434.82	-0.452	84.2	0.15585	1.616E-02
		69-IB(-)			115.1	434.82	-0.452	84.2	0.15585	1.616E-02
59	0	59-U (+)	0	7134261.	1000.0	2412.20	1.947	1461.2	1.53267	3.200E-01
		116-I (-)			1000.0	2412.20	1.947	1461.2	1.53267	3.200E-01
60	0	43-U (+)	0	2662136.	115.1	434.82	-0.452	84.2	0.15585	1.616E-02
		69-IA(-)			115.1	434.82	-0.452	84.2	0.15585	1.616E-02
61	0	44-B (+)	0	49998.	115.1	434.82	-0.452	84.2	0.15585	1.616E-02
		600-IB(-)			115.1	434.82	-0.452	84.2	0.15585	1.616E-02
62	0	18-T (+)	0	95771455.	109.9	50.00	-0.186	78.0	0.14704	1.616E-02
		62-IA(-)			109.9	50.00	-0.186	78.0	0.14704	1.616E-02
63	0	37-UT(+)	0	126636.	114.9	1.47	0.928	1037.7	1.81758	2.157E+02
		80-IB(-)			114.9	1.47	0.928	1037.7	1.81758	2.157E+02
64	0	38-UT(+)	0	131828.	95.0	0.82	0.948	1049.3	1.89891	3.836E+02
		87-IA(-)			95.0	0.82	0.948	1049.3	1.89891	3.836E+02
66	0	66-U (+)	0	6454031.	634.3	630.88	1.145	1309.2	1.54550	9.376E-01
		126-I (-)			634.3	630.88	1.145	1309.2	1.54550	9.376E-01
67	2	67-U (+)	0	5797566.	1000.0	588.61	1.427	1518.3	1.71820	1.439E+00
		5-I (-)			1000.0	588.61	1.427	1518.3	1.71820	1.439E+00
68	0	68-U (+)	0	5814725.	915.5	428.72	1.352	1477.6	1.72354	1.865E+00
		6-I (-)			915.5	428.72	1.352	1477.6	1.72354	1.865E+00
69	0	65-U (+)	0	649929.	167.7	5.70	-0.000	135.7	0.24370	1.644E-02
		301-IA(-)			167.7	5.70	-0.000	135.7	0.24370	1.644E-02
70	0	65-B (+)	0	5055.	167.8	5.70	0.999	1133.0	1.83315	6.506E+01
		999-IB(-)			167.8	5.70	0.999	1133.0	1.83315	6.506E+01

IP7019269

** SAVE CASE **

STREAM PROPERTIES

STRM NO.	STRM TYPE	COMP FRM/TO ID	FLU ID	MASS FLOW (LBM/HR)	TEMP (F)	PRESS (PSIA)	QUAL (HUM) (-)	ENTH (B/LB)	ENTRPY (B/LB-F)	SPEC. VOLUME (FT3/LBM)
71	0	71-U (+)	0	5274273.	165.4	185.44	-0.253	133.8	0.23979	1.641E-02
		134-I (-)			165.4	185.44	-0.253	133.8	0.23979	1.641E-02
72	0	72-U (+)	0	5274273.	204.2	185.44	-0.207	172.7	0.30018	1.665E-02
		73-IA(-)			204.2	185.44	-0.207	172.7	0.30018	1.665E-02
73	0	73-U (+)	0	5274273.	204.2	185.44	-0.207	172.7	0.30018	1.665E-02
		135-I (-)			204.2	185.44	-0.207	172.7	0.30018	1.665E-02
74	0	74-U (+)	0	5274273.	271.1	185.44	-0.127	240.3	0.39726	1.717E-02
		136-I (-)			271.1	185.44	-0.127	240.3	0.39726	1.717E-02
75	0	75-U (+)	0	5274273.	299.7	135.61	-0.060	269.6	0.43677	1.744E-02
		23-FW(-)			299.7	135.61	-0.060	269.6	0.43677	1.744E-02
76	0	38-UP(+)	0	3570698.	355.7	2831.76	-1.618	332.0	0.50488	1.782E-02
		106-IB(-)			355.7	2831.76	-1.618	332.0	0.50488	1.782E-02
77	0	46-U (+)	0	1389060.	168.3	5.77	0.973	1106.5	1.78960	6.258E+01
		13-I (-)			168.3	5.77	0.973	1106.5	1.78960	6.258E+01
79	0	47-U (+)	0	1391818.	169.5	5.93	0.974	1108.1	1.78918	6.101E+01
		12-I (-)			169.5	5.93	0.974	1108.1	1.78918	6.101E+01
80	2	46-E (+)	0	71799.	167.8	5.70	0.973	1106.5	1.79087	6.330E+01
		19-S (-)			166.2	5.50	0.974	1106.5	1.79475	6.554E+01
81	2	47-E (+)	0	68603.	169.0	5.86	0.974	1108.1	1.79046	6.171E+01
		999-IA(-)			167.7	5.69	0.975	1108.1	1.79366	6.351E+01
82	0	82-U (+)	0	2249.	996.7	2345.97	1.896	1461.2	1.53540	3.291E-01
		83-IA(-)			996.7	2345.97	1.896	1461.2	1.53540	3.291E-01
83	0	80-U (+)	0	134357.	203.9	12.50	0.836	987.9	1.52954	2.609E+01
		174-IA(-)			203.9	12.50	0.836	987.9	1.52954	2.609E+01
84	0	81-U (+)	0	138048.	200.4	11.62	0.847	997.2	1.55020	2.831E+01
		404-IA(-)			200.4	11.62	0.847	997.2	1.55020	2.831E+01

IP7019270

** SAVE CASE **

STREAM PROPERTIES

STRM NO.	STRM TYPE	COMP FRM/TO ID	FLU ID	MASS FLOW (LBM/HR)	TEMP (F)	PRESS (PSIA)	QUAL (HUM) (-)	ENTH (B/LB)	ENTRPY (B/LB-F)	SPEC. VOLUME (FT3/LBM)
85	0	85-U (+)	0	19469.	641.8	346.05	1.163	1334.4	1.63022	1.807E+00
		173-I (-)			641.8	346.05	1.163	1334.4	1.63022	1.807E+00
86	0	83-U (+)	0	10517.	702.6	780.55	1.203	1341.3	1.55257	8.076E-01
		84-IA(-)			702.6	780.55	1.203	1341.3	1.55257	8.076E-01
87	0	87-U (+)	0	131828.	95.0	0.82	0.948	1049.3	1.89891	3.836E+02
		88-IA(-)			95.0	0.82	0.948	1049.3	1.89891	3.836E+02
88	0	88-U (+)	0	131828.	95.0	0.82	0.948	1049.3	1.89891	3.836E+02
		89-IA(-)			95.0	0.82	0.948	1049.3	1.89891	3.836E+02
89	0	89-U (+)	0	131828.	95.0	0.82	0.948	1049.3	1.89891	3.836E+02
		90-IA(-)			95.0	0.82	0.948	1049.3	1.89891	3.836E+02
90	0	90-U (+)	0	131828.	95.0	0.82	0.948	1049.3	1.89891	3.836E+02
		781-IA(-)			95.0	0.82	0.948	1049.3	1.89891	3.836E+02
93	0	93-U (+)	0	0.	501.5	1087.57	-0.104	489.5	0.68904	2.038E-02
		94-IA(-)			501.5	1087.57	-0.104	489.5	0.68904	2.038E-02
94	0	94-U (+)	0	0.	445.5	778.76	-0.116	425.3	0.62151	1.930E-02
		95-IA(-)			445.5	778.76	-0.116	425.3	0.62151	1.930E-02
95	0	95-U (+)	0	0.	392.8	432.83	-0.084	367.5	0.55712	1.851E-02
		81-IB(-)			392.8	432.83	-0.084	367.5	0.55712	1.851E-02
96	0	96-U (+)	0	20697.	633.4	630.88	1.145	1308.6	1.54495	9.365E-01
		97-IB(-)			633.4	630.88	1.145	1308.6	1.54495	9.365E-01
97	0	97-U (+)	0	508025.	624.5	138.51	1.167	1339.1	1.73234	4.572E+00
		98-IA(-)			624.5	138.51	1.167	1339.1	1.73234	4.572E+00
98	0	98-U (+)	0	508025.	624.5	138.51	1.167	1339.1	1.73234	4.572E+00
		143-I (-)			624.5	138.51	1.167	1339.1	1.73234	4.572E+00
99	0	99-U (+)	0	0.	350.7	135.75	0.000	322.5	0.50413	1.800E-02
		100-IB(-)			350.7	135.75	0.000	322.5	0.50413	1.800E-02

IP7019271

** SAVE CASE **

STREAM PROPERTIES

STRM NO.	STRM TYPE	COMP FRM/TO ID	FLU ID	MASS FLOW (LBM/HR)	TEMP (F)	PRESS (PSIA)	QUAL (HUM) (-)	ENTH (B/LB)	ENTRPY (B/LB-F)	SPEC. VOLUME (FT3/LBM)
100	0	100-U (+)	0	1567562.	365.8	260.01	-0.050	338.6	0.52337	1.817E-02
		23-D (-)			365.8	260.01	-0.050	338.6	0.52337	1.817E-02
101	0	101-U (+)	0	7091397.	351.1	298.05	-0.086	323.2	0.50437	1.799E-02
		150-I (-)			351.1	298.05	-0.086	323.2	0.50437	1.799E-02
102	0	84-U (+)	0	14479.	683.4	735.05	1.186	1332.3	1.55085	8.429E-01
		85-IA(-)			683.4	735.05	1.186	1332.3	1.55085	8.429E-01
104	0	44-U (+)	0	5274273.	115.1	434.82	-0.452	84.2	0.15585	1.616E-02
		30-T (-)			115.1	434.82	-0.452	84.2	0.15585	1.616E-02
105	0	62-U (+)	0	143650000.	109.6	50.00	-0.186	77.7	0.14654	1.616E-02
		63-I (-)			109.6	50.00	-0.186	77.7	0.14654	1.616E-02
106	0	106-U (+)	0	7141395.	355.7	2830.70	-1.616	332.0	0.50488	1.782E-02
		155-I (-)			355.7	2830.70	-1.616	332.0	0.50488	1.782E-02
107	0	60-U (+)	0	143650000.	72.3	50.00	-0.226	40.5	0.07899	1.605E-02
		61-I (-)			72.3	50.00	-0.226	40.5	0.07899	1.605E-02
108	2	61-U (+)	0	95771455.	72.3	50.00	-0.226	40.5	0.07899	1.605E-02
		16-T (-)			81.0	50.00	-0.217	49.2	0.09520	1.607E-02
109	0	109-U (+)	0	1567562.	365.8	260.01	-0.050	338.6	0.52337	1.817E-02
		100-IA(-)			365.8	260.01	-0.050	338.6	0.52337	1.817E-02
110	0	110-U (+)	0	1567562.	365.8	260.01	-0.050	338.6	0.52337	1.817E-02
		109-IA(-)			365.8	260.01	-0.050	338.6	0.52337	1.817E-02
111	0	111-U (+)	0	1567562.	365.8	260.01	-0.050	338.6	0.52337	1.817E-02
		110-IA(-)			365.8	260.01	-0.050	338.6	0.52337	1.817E-02
114	2	114-U (+)	0	7141395.	556.9	2768.92	-0.721	554.9	0.74869	2.139E-02
		64-I (-)			556.9	2747.97	-0.697	554.9	0.74874	2.139E-02
115	0	115-U (+)	0	3570698.	557.0	2768.91	-0.721	555.0	0.74873	2.139E-02
		114-IB(-)			557.0	2768.91	-0.721	555.0	0.74873	2.139E-02

IP7019272

** SAVE CASE **

STREAM PROPERTIES

STRM NO.	STRM TYPE	COMP FRM/TO ID	FLU ID	MASS FLOW (LBM/HR)	TEMP (F)	PRESS (PSIA)	QUAL (HUM) (-)	ENTH (B/LB)	ENTRPY (B/LB-F)	SPEC. VOLUME (FT3/LBM)
116	0	116-U (+)	0	7134261.	1000.0	2412.20	1.947	1461.2	1.53267	3.200E-01
		117-I (-)			1000.0	2412.20	1.947	1461.2	1.53267	3.200E-01
117	0	117-U (+)	0	7134261.	1000.0	2412.20	1.947	1461.2	1.53267	3.200E-01
		39-I (-)			1000.0	2412.20	1.947	1461.2	1.53267	3.200E-01
118	0	118-U (+)	0	7104351.	996.7	2345.97	1.896	1461.2	1.53540	3.291E-01
		1-I (-)			996.7	2345.97	1.896	1461.2	1.53540	3.291E-01
119	0	116-B (+)	0	0.	1000.0	2412.20	1.947	1461.2	1.53267	3.200E-01
		82-IA(-)			1000.0	2412.20	1.947	1461.2	1.53267	3.200E-01
120	0	120-U (+)	0	7087192.	903.9	1710.97	1.513	1423.1	1.53943	4.249E-01
		3-I (-)			903.9	1710.97	1.513	1423.1	1.53943	4.249E-01
121	0	121-U (+)	0	6439598.	633.4	630.88	1.145	1308.6	1.54495	9.365E-01
		124-I (-)			633.4	630.88	1.145	1308.6	1.54495	9.365E-01
122	0	119-U (+)	0	27661.	996.7	2345.97	1.896	1461.2	1.53540	3.291E-01
		122-I (-)			996.7	2345.97	1.896	1461.2	1.53540	3.291E-01
123	0	121-B (+)	0	23467.	633.4	630.88	1.145	1308.6	1.54495	9.365E-01
		123-I (-)			633.4	630.88	1.145	1308.6	1.54495	9.365E-01
124	0	124-U (+)	0	6430139.	633.4	630.88	1.145	1308.6	1.54495	9.365E-01
		128-I (-)			633.4	630.88	1.145	1308.6	1.54495	9.365E-01
125	0	118-B (+)	0	29910.	996.7	2345.97	1.896	1461.2	1.53540	3.291E-01
		119-I (-)			996.7	2345.97	1.896	1461.2	1.53540	3.291E-01
126	0	126-U (+)	0	5795056.	634.3	630.88	1.145	1309.2	1.54550	9.376E-01
		610-IA(-)			634.3	630.88	1.145	1309.2	1.54550	9.376E-01
127	2	127-U (+)	0	5036684.	627.0	138.51	1.169	1340.4	1.73354	4.584E+00
		8-I (-)			626.8	136.92	1.169	1340.4	1.73479	4.637E+00
128	0	129-U (+)	0	4990.	627.0	138.51	1.169	1340.4	1.73354	4.584E+00
		85-IB(-)			627.0	138.51	1.169	1340.4	1.73354	4.584E+00

IP7019273

STREAM PROPERTIES

STRM NO.	STRM TYPE	COMP FRM/TO ID	FLU ID	MASS FLOW (LBM/HR)	TEMP (F)	PRESS (PSIA)	QUAL (HUM) (-)	ENTH (B/LB)	ENTRPY (B/LB-F)	SPEC. VOLUME (FT3/LBM)
129	2	61-B (+)	0	47878545.	72.3	50.00	-0.226	40.5	0.07899	1.605E-02
		17-T (-)			80.9	50.00	-0.217	49.1	0.09496	1.607E-02
130	0	123-U (+)	0	15200.	633.4	630.88	1.145	1308.6	1.54495	9.365E-01
		96-IB(-)			633.4	630.88	1.145	1308.6	1.54495	9.365E-01
131	0	122-U (+)	0	25150.	996.7	2345.97	1.896	1461.2	1.53540	3.291E-01
		66-IB(-)			996.7	2345.97	1.896	1461.2	1.53540	3.291E-01
132	0	132-U (+)	0	3926158.	131.3	11.46	-0.070	99.3	0.18394	1.625E-02
		18-D (-)			131.3	11.46	-0.070	99.3	0.18394	1.625E-02
133	0	133-U (+)	0	5274273.	117.3	236.13	-0.343	85.9	0.15983	1.618E-02
		31-T (-)			117.3	236.13	-0.343	85.9	0.15983	1.618E-02
134	0	133-B (+)	0	0.	117.3	236.13	-0.343	85.9	0.15983	1.618E-02
		71-IB(-)			117.3	236.13	-0.343	85.9	0.15983	1.618E-02
135	0	131-U (+)	0	2662136.	114.9	1.47	0.000	82.9	0.15583	1.618E-02
		42-I (-)			114.9	1.47	0.000	82.9	0.15583	1.618E-02
136	0	125-U (+)	0	5498.	633.4	630.88	1.145	1308.6	1.54495	9.365E-01
		96-IA(-)			633.4	630.88	1.145	1308.6	1.54495	9.365E-01
137	0	128-U (+)	0	6428881.	633.4	630.88	1.145	1308.6	1.54495	9.365E-01
		66-IA(-)			633.4	630.88	1.145	1308.6	1.54495	9.365E-01
138	0	134-U (+)	0	5274273.	165.4	185.44	-0.253	133.8	0.23979	1.641E-02
		20-T (-)			165.4	185.44	-0.253	133.8	0.23979	1.641E-02
139	0	135-U (+)	0	5274273.	204.2	185.44	-0.207	172.7	0.30018	1.665E-02
		21-T (-)			204.2	185.44	-0.207	172.7	0.30018	1.665E-02
140	0	136-U (+)	0	5274273.	271.1	185.44	-0.127	240.3	0.39726	1.717E-02
		22-T (-)			271.1	185.44	-0.127	240.3	0.39726	1.717E-02
141	0	141-U (+)	0	3692.	596.8	5.00	1.203	1334.4	2.09192	1.258E+02
		174-IB(-)			596.8	5.00	1.203	1334.4	2.09192	1.258E+02

IP7019274

** SAVE CASE **

STREAM PROPERTIES

STRM NO.	STRM TYPE	COMP FRM/TO ID	FLU ID	MASS FLOW (LBM/HR)	TEMP (F)	PRESS (PSIA)	QUAL (HUM) (-)	ENTH (B/LB)	ENTRPY (B/LB-F)	SPEC. VOLUME (FT3/LBM)
142	2	142-U (+)	0	249561.	624.5	138.51	1.167	1339.1	1.73234	4.572E+00
		23-S (-)			624.1	135.75	1.168	1339.1	1.73452	4.665E+00
143	0	143-U (+)	0	381389.	624.5	138.51	1.167	1339.1	1.73234	4.572E+00
		142-I (-)			624.5	138.51	1.167	1339.1	1.73234	4.572E+00
144	0	134-B (+)	0	0.	165.4	185.44	-0.253	133.8	0.23979	1.641E-02
		72-IB(-)			165.4	185.44	-0.253	133.8	0.23979	1.641E-02
145	0	139-B (+)	0	0.	175.4	10.28	-0.019	143.4	0.25587	1.648E-02
		89-IB(-)			175.4	10.28	-0.019	143.4	0.25587	1.648E-02
146	2	139-U (+)	0	654984.	175.4	10.28	-0.019	143.4	0.25587	1.648E-02
		65-I (-)			167.8	5.70	0.007	143.4	0.25597	5.153E-01
147	0	135-B (+)	0	0.	204.2	185.44	-0.207	172.7	0.30018	1.665E-02
		74-IB(-)			204.2	185.44	-0.207	172.7	0.30018	1.665E-02
148	0	127-B (+)	0	6252.	627.0	138.51	1.169	1340.4	1.73354	4.584E+00
		129-I (-)			627.0	138.51	1.169	1340.4	1.73354	4.584E+00
149	0	138-U (+)	0	472538.	214.2	44.00	-0.064	182.4	0.31541	1.673E-02
		20-D (-)			214.2	44.00	-0.064	182.4	0.31541	1.673E-02
150	0	136-B (+)	0	0.	271.1	185.44	-0.127	240.3	0.39726	1.717E-02
		75-IB(-)			271.1	185.44	-0.127	240.3	0.39726	1.717E-02
151	2	142-B (+)	0	131828.	624.5	138.51	1.167	1339.1	1.73234	4.572E+00
		38-IT(-)			624.3	137.11	1.168	1339.1	1.73344	4.619E+00
152	2	143-B (+)	0	126636.	624.5	138.51	1.167	1339.1	1.73234	4.572E+00
		37-IT(-)			624.3	137.11	1.168	1339.1	1.73344	4.619E+00
153	0	151-C (+)	0	1757915.	124.5	236.13	-0.334	93.1	0.17215	1.621E-02
		319-T (-)			124.5	236.13	-0.334	93.1	0.17215	1.621E-02
154	0	151-U (+)	0	1758443.	124.5	236.13	-0.334	93.1	0.17215	1.621E-02
		19-T (-)			124.5	236.13	-0.334	93.1	0.17215	1.621E-02

IP7019275

** SAVE CASE **

STREAM PROPERTIES

STRM NO.	STRM TYPE	COMP FRM/TO ID	FLU ID	MASS FLOW (LBM/HR)	TEMP (F)	PRESS (PSIA)	QUAL (HUM) (-)	ENTH (B/LB)	ENTRPY (B/LB-F)	SPEC. VOLUME (FT3/LBM)
155	0	151-B (+)	0	1757915.	124.5	236.13	-0.334	93.1	0.17215	1.621E-02
		219-T (-)			124.5	236.13	-0.334	93.1	0.17215	1.621E-02
156	0	122-B (+)	0	2511.	996.7	2345.97	1.896	1461.2	1.53540	3.291E-01
		67-IB(-)			996.7	2345.97	1.896	1461.2	1.53540	3.291E-01
157	0	119-B (+)	0	2249.	996.7	2345.97	1.896	1461.2	1.53540	3.291E-01
		82-IB(-)			996.7	2345.97	1.896	1461.2	1.53540	3.291E-01
158	0	158-B (+)	0	3570698.	355.8	2785.34	-1.516	332.0	0.50503	1.782E-02
		24-T (-)			355.8	2785.34	-1.516	332.0	0.50503	1.782E-02
159	2	159-U (+)	0	7141395.	355.8	2796.59	-1.540	332.0	0.50502	1.782E-02
		158-I (-)			355.8	2785.34	-1.516	332.0	0.50503	1.782E-02
160	0	160-U (+)	0	783583.	365.8	260.01	-0.050	338.6	0.52337	1.817E-02
		111-IA(-)			365.8	260.01	-0.050	338.6	0.52337	1.817E-02
161	0	161-U (+)	0	641201.	416.5	623.81	-0.114	393.3	0.58619	1.884E-02
		24-D (-)			416.5	623.81	-0.114	393.3	0.58619	1.884E-02
162	0	162-U (+)	0	312276.	501.4	1087.24	-0.104	489.4	0.68892	2.038E-02
		26-D (-)			501.4	1087.24	-0.104	489.4	0.68892	2.038E-02
163	0	162-B (+)	0	0.	501.4	1087.24	-0.104	489.4	0.68892	2.038E-02
		93-IA(-)			501.4	1087.24	-0.104	489.4	0.68892	2.038E-02
164	0	161-B (+)	0	0.	416.5	623.81	-0.114	393.3	0.58619	1.884E-02
		94-IC(-)			416.5	623.81	-0.114	393.3	0.58619	1.884E-02
165	0	160-B (+)	0	0.	365.8	260.01	-0.050	338.6	0.52337	1.817E-02
		95-IC(-)			365.8	260.01	-0.050	338.6	0.52337	1.817E-02
166	2	166-U (+)	0	142383.	799.0	262.10	1.268	1422.3	1.73458	2.802E+00
		24-S (-)			798.8	260.01	1.268	1422.3	1.73544	2.824E+00
167	2	167-U (+)	0	328925.	634.3	630.88	1.145	1309.2	1.54550	9.376E-01
		26-S (-)			633.4	623.81	1.145	1309.2	1.54662	9.483E-01

IP7019276

** SAVE CASE **

STREAM PROPERTIES

STRM NO.	STRM TYPE	COMP FRM/TO ID	FLU ID	MASS FLOW (LBM/HR)	TEMP (F)	PRESS (PSIA)	QUAL (HUM) (-)	ENTH (B/LB)	ENTRPY (B/LB-F)	SPEC. VOLUME (FT3/LBM)
168	2	168-U (+)	0	312276.	780.4	1097.86	1.289	1371.7	1.54384	6.069E-01
		28-S (-)			779.5	1087.24	1.288	1371.7	1.54481	6.128E-01
169	2	168-B (+)	0	311850.	780.4	1097.86	1.289	1371.7	1.54384	6.069E-01
		29-S (-)			779.5	1087.89	1.288	1371.7	1.54475	6.125E-01
170	2	167-B (+)	0	330051.	634.3	630.88	1.145	1309.2	1.54550	9.376E-01
		27-S (-)			633.6	624.90	1.145	1309.2	1.54645	9.467E-01
171	0	126-B (+)	0	658975.	634.3	630.88	1.145	1309.2	1.54550	9.376E-01
		402-I (-)			634.3	630.88	1.145	1309.2	1.54550	9.376E-01
172	0	158-U (+)	0	3570698.	355.8	2785.34	-1.516	332.0	0.50503	1.782E-02
		25-T (-)			355.8	2785.34	-1.516	332.0	0.50503	1.782E-02
173	0	163-U (+)	0	783979.	365.8	259.73	-0.050	338.6	0.52337	1.817E-02
		111-IB(-)			365.8	259.73	-0.050	338.6	0.52337	1.817E-02
174	0	163-B (+)	0	0.	365.8	259.73	-0.050	338.6	0.52337	1.817E-02
		95-IB(-)			365.8	259.73	-0.050	338.6	0.52337	1.817E-02
175	0	164-B (+)	0	0.	416.4	624.90	-0.115	393.2	0.58607	1.884E-02
		94-IB(-)			416.4	624.90	-0.115	393.2	0.58607	1.884E-02
176	0	165-B (+)	0	0.	501.6	1087.89	-0.104	489.6	0.68915	2.039E-02
		93-IB(-)			501.6	1087.89	-0.104	489.6	0.68915	2.039E-02
177	0	159-B (+)	0	0.	355.8	2796.59	-1.540	332.0	0.50502	1.782E-02
		115-IB(-)			355.8	2796.59	-1.540	332.0	0.50502	1.782E-02
178	0	165-U (+)	0	311850.	501.6	1087.89	-0.104	489.6	0.68915	2.039E-02
		27-D (-)			501.6	1087.89	-0.104	489.6	0.68915	2.039E-02
179	0	164-U (+)	0	641901.	416.4	624.90	-0.115	393.2	0.58607	1.884E-02
		25-D (-)			416.4	624.90	-0.115	393.2	0.58607	1.884E-02
180	0	120-B (+)	0	17159.	903.9	1710.97	1.513	1423.1	1.53943	4.249E-01
		68-IB(-)			903.9	1710.97	1.513	1423.1	1.53943	4.249E-01

IP7019277

** SAVE CASE **

STREAM PROPERTIES

STRM NO.	STRM TYPE	COMP FRM/TO ID	FLU ID	MASS FLOW (LBM/HR)	TEMP (F)	PRESS (PSIA)	QUAL (HUM) (-)	ENTH (B/LB)	ENTRPY (B/LB-F)	SPEC. VOLUME (FT3/LBM)
181	0	129-B (+)	0	1262.	627.0	138.51	1.169	1340.4	1.73354	4.584E+00
		40-IC(-)			627.0	138.51	1.169	1340.4	1.73354	4.584E+00
182	0	173-U (+)	0	14269.	641.8	346.05	1.163	1334.4	1.63022	1.807E+00
		141-I (-)			641.8	346.05	1.163	1334.4	1.63022	1.807E+00
183	0	123-B (+)	0	8268.	633.4	630.88	1.145	1308.6	1.54495	9.365E-01
		83-IB(-)			633.4	630.88	1.145	1308.6	1.54495	9.365E-01
184	0	124-B (+)	0	9459.	633.4	630.88	1.145	1308.6	1.54495	9.365E-01
		125-I (-)			633.4	630.88	1.145	1308.6	1.54495	9.365E-01
186	0	125-B (+)	0	3962.	633.4	630.88	1.145	1308.6	1.54495	9.365E-01
		84-IB(-)			633.4	630.88	1.145	1308.6	1.54495	9.365E-01
187	0	146-U (+)	0	0.	350.7	135.75	0.000	322.5	0.50413	1.800E-02
		413-I (-)			350.7	135.75	0.000	322.5	0.50413	1.800E-02
191	0	146-B (+)	0	0.	350.7	135.75	0.000	322.5	0.50413	1.800E-02
		99-IA(-)			350.7	135.75	0.000	322.5	0.50413	1.800E-02
192	0	144-B (+)	0	0.	350.7	135.75	0.000	322.5	0.50413	1.800E-02
		32-T (-)			350.7	135.75	0.000	322.5	0.50413	1.800E-02
193	0	144-U (+)	0	7091397.	350.7	135.75	0.000	322.5	0.50413	1.800E-02
		145-I (-)			350.7	135.75	0.000	322.5	0.50413	1.800E-02
194	0	145-B (+)	0	0.	350.7	135.75	0.000	322.5	0.50413	1.800E-02
		33-T (-)			350.7	135.75	0.000	322.5	0.50413	1.800E-02
196	0	148-U (+)	0	3545698.	350.7	135.75	0.000	322.5	0.50413	1.800E-02
		35-I (-)			350.7	135.75	0.000	322.5	0.50413	1.800E-02
197	0	147-U (+)	0	0.	350.7	135.75	0.000	322.5	0.50413	1.800E-02
		73-IB(-)			350.7	135.75	0.000	322.5	0.50413	1.800E-02
199	0	600-U (+)	0	7141395.	349.5	298.05	-0.088	321.5	0.50231	1.797E-02
		36-I (-)			349.5	298.05	-0.088	321.5	0.50231	1.797E-02

IP7019278

** SAVE CASE **

STREAM PROPERTIES

STRM NO.	STRM TYPE	COMP FRM/TO ID	FLU ID	MASS FLOW (LBM/HR)	TEMP (F)	PRESS (PSIA)	QUAL (HUM) (-)	ENTH (B/LB)	ENTRPY (B/LB-F)	SPEC. VOLUME (FT3/LBM)
200	0	148-B (+)	0	3545698.	350.7	135.75	0.000	322.5	0.50413	1.800E-02
		34-I (-)			350.7	135.75	0.000	322.5	0.50413	1.800E-02
201	0	36-U (+)	0	7141395.	349.5	298.05	-0.088	321.5	0.50231	1.797E-02
		153-I (-)			349.5	298.05	-0.088	321.5	0.50231	1.797E-02
202	0	153-U (+)	0	3570698.	349.5	298.05	-0.088	321.5	0.50231	1.797E-02
		37-IP(-)			349.5	298.05	-0.088	321.5	0.50231	1.797E-02
203	0	153-B (+)	0	3570698.	349.5	298.05	-0.088	321.5	0.50231	1.797E-02
		38-IP(-)			349.5	298.05	-0.088	321.5	0.50231	1.797E-02
204	0	150-B (+)	0	0.	351.1	298.05	-0.086	323.2	0.50437	1.799E-02
		109-IB(-)			351.1	298.05	-0.086	323.2	0.50437	1.799E-02
205	0	155-B (+)	0	0.	355.7	2830.70	-1.616	332.0	0.50488	1.782E-02
		110-IB(-)			355.7	2830.70	-1.616	332.0	0.50488	1.782E-02
207	0	145-U (+)	0	7091397.	350.7	135.75	0.000	322.5	0.50413	1.800E-02
		148-I (-)			350.7	135.75	0.000	322.5	0.50413	1.800E-02
208	0	174-U (+)	0	138048.	200.4	11.62	0.847	997.2	1.55020	2.831E+01
		81-IA(-)			200.4	11.62	0.847	997.2	1.55020	2.831E+01
210	0	40-U (+)	0	7720.	629.2	293.18	1.157	1331.2	1.64475	2.121E+00
		30-S (-)			629.2	293.18	1.157	1331.2	1.64475	2.121E+00
211	0	141-B (+)	0	10577.	596.8	5.00	1.203	1334.4	2.09192	1.258E+02
		450-IB(-)			596.8	5.00	1.203	1334.4	2.09192	1.258E+02
212	0	131-B (+)	0	2662136.	114.9	1.47	0.000	82.9	0.15583	1.618E-02
		43-I (-)			114.9	1.47	0.000	82.9	0.15583	1.618E-02
213	0	69-U (+)	0	5324271.	115.1	434.82	-0.452	84.2	0.15585	1.616E-02
		44-I (-)			115.1	434.82	-0.452	84.2	0.15585	1.616E-02
214	0	176-U (+)	0	7134.	60.0	15.00	-0.157	28.1	0.05561	1.603E-02
		175-IB(-)			60.0	15.00	-0.157	28.1	0.05561	1.603E-02

IP7019279

** SAVE CASE **

STREAM PROPERTIES

STRM NO.	STRM TYPE	COMP FRM/TO ID	FLU ID	MASS FLOW (LBM/HR)	TEMP (F)	PRESS (PSIA)	QUAL (HUM) (-)	ENTH (B/LB)	ENTRPY (B/LB-F)	SPEC. VOLUME (FT3/LBM)
215	0	140-U (+)	0	3780975.	98.6	0.92	-0.000	66.7	0.12720	1.613E-02
		132-IA(-)			98.6	0.92	-0.000	66.7	0.12720	1.613E-02
218	0	138-B (+)	0	0.	214.2	44.00	-0.064	182.4	0.31541	1.673E-02
		88-IB(-)			214.2	44.00	-0.064	182.4	0.31541	1.673E-02
219	0	137-U (+)	0	148025.	281.1	68.66	-0.023	250.3	0.41138	1.727E-02
		21-D (-)			281.1	68.66	-0.023	250.3	0.41138	1.727E-02
220	0	137-B (+)	0	0.	281.1	68.66	-0.023	250.3	0.41138	1.727E-02
		87-IB(-)			281.1	68.66	-0.023	250.3	0.41138	1.727E-02
222	0	117-B (+)	0	0.	1000.0	2412.20	1.947	1461.2	1.53267	3.200E-01
		98-IB(-)			1000.0	2412.20	1.947	1461.2	1.53267	3.200E-01
223	0	147-B (+)	0	0.	350.7	135.75	0.000	322.5	0.50413	1.800E-02
		99-IB(-)			350.7	135.75	0.000	322.5	0.50413	1.800E-02
224	2	166-B (+)	0	142078.	799.0	262.10	1.268	1422.3	1.73458	2.802E+00
		25-S (-)			798.8	259.73	1.268	1422.3	1.73555	2.827E+00
225	0	219-T (+)	0	1757915.	166.2	236.13	-0.284	134.7	0.24106	1.642E-02
		334-IB(-)			166.2	236.13	-0.284	134.7	0.24106	1.642E-02
226	0	219-D (+)	0	72884.	168.2	5.76	0.000	136.2	0.24449	1.644E-02
		301-IB(-)			168.2	5.76	0.000	136.2	0.24449	1.644E-02
227	0	175-U (+)	0	145183.	200.4	11.62	0.799	949.6	1.47805	2.668E+01
		132-IB(-)			200.4	11.62	0.799	949.6	1.47805	2.668E+01
301	0	301-U (+)	0	722813.	167.8	5.70	-0.000	135.7	0.24378	1.644E-02
		302-IA(-)			167.8	5.70	-0.000	135.7	0.24378	1.644E-02
302	0	302-U (+)	0	794611.	167.6	5.68	-0.000	135.6	0.24356	1.644E-02
		303-IA(-)			167.6	5.68	-0.000	135.6	0.24356	1.644E-02
303	0	303-U (+)	0	868269.	167.6	5.68	-0.000	135.6	0.24352	1.644E-02
		31-S (-)			167.6	5.68	-0.000	135.6	0.24352	1.644E-02

IP7019280

STREAM PROPERTIES

STRM NO.	STRM TYPE	COMP FRM/TO ID	FLU ID	MASS FLOW (LBM/HR)	TEMP (F)	PRESS (PSIA)	QUAL (HUM) (-)	ENTH (B/LB)	ENTRPY (B/LB-F)	SPEC. VOLUME (FT3/LBM)
305	0	305-U (+)	0	1460859.	223.5	13.82	1.007	1156.3	1.77216	2.906E+01
		46-I (-)			223.5	13.82	1.007	1156.3	1.77216	2.906E+01
306	0	305-B (+)	0	1460421.	223.5	13.82	1.007	1156.3	1.77216	2.906E+01
		47-I (-)			223.5	13.82	1.007	1156.3	1.77216	2.906E+01
307	0	305-C (+)	0	1460421.	223.5	13.82	1.007	1156.3	1.77216	2.906E+01
		11-I (-)			223.5	13.82	1.007	1156.3	1.77216	2.906E+01
319	0	319-T (+)	0	1757915.	165.3	236.13	-0.285	133.9	0.23969	1.641E-02
		334-IC(-)			165.3	236.13	-0.285	133.9	0.23969	1.641E-02
321	0	319-D (+)	0	73658.	167.3	5.64	0.000	135.3	0.24312	1.643E-02
		303-IB(-)			167.3	5.64	0.000	135.3	0.24312	1.643E-02
334	2	334-U (+)	0	5274273.	165.3	236.13	-0.285	133.8	0.23954	1.641E-02
		71-IA(-)			165.4	185.44	-0.253	133.8	0.23979	1.641E-02
401	0	401-U (+)	0	624126.	780.4	1097.86	1.289	1371.7	1.54384	6.069E-01
		168-I (-)			780.4	1097.86	1.289	1371.7	1.54384	6.069E-01
402	0	402-U (+)	0	658975.	634.3	630.88	1.145	1309.2	1.54550	9.376E-01
		167-I (-)			634.3	630.88	1.145	1309.2	1.54550	9.376E-01
403	0	403-U (+)	0	284461.	799.0	262.10	1.268	1422.3	1.73458	2.802E+00
		166-I (-)			799.0	262.10	1.268	1422.3	1.73458	2.802E+00
404	2	8-E (+)	0	148025.	521.7	69.10	1.123	1293.0	1.76305	8.342E+00
		22-S (-)			521.7	68.66	1.123	1293.0	1.76374	8.395E+00
405	2	9-E (+)	0	324513.	430.0	45.23	1.084	1250.5	1.76359	1.156E+01
		21-S (-)			429.7	44.00	1.084	1250.5	1.76660	1.188E+01
406	2	10-E (+)	0	182445.	245.4	13.62	1.018	1166.9	1.78906	3.050E+01
		20-S (-)			245.0	13.09	1.019	1166.9	1.79335	3.172E+01
407	0	401-B (+)	0	0.	780.4	1097.86	1.289	1371.7	1.54384	6.069E-01
		404-IB(-)			780.4	1097.86	1.289	1371.7	1.54384	6.069E-01

IP7019281

** SAVE CASE **

STREAM PROPERTIES

STRM NO.	STRM TYPE	COMP FRM/TO ID	FLU ID	MASS FLOW (LBM/HR)	TEMP (F)	PRESS (PSIA)	QUAL (HUM) (-)	ENTH (B/LB)	ENTRPY (B/LB-F)	SPEC. VOLUME (FT3/LBM)
408	0	402-B (+)	0	0.	634.3	630.88	1.145	1309.2	1.54550	9.376E-01
		405-IB(-)			634.3	630.88	1.145	1309.2	1.54550	9.376E-01
409	0	403-B (+)	0	0.	799.0	262.10	1.268	1422.3	1.73458	2.802E+00
		406-IB(-)			799.0	262.10	1.268	1422.3	1.73458	2.802E+00
411	0	6-E (+)	0	284461.	799.0	262.10	1.268	1422.3	1.73458	2.802E+00
		403-I (-)			799.0	262.10	1.268	1422.3	1.73458	2.802E+00
413	0	413-U (+)	0	0.	350.7	135.75	0.000	322.5	0.50413	1.800E-02
		90-IB(-)			350.7	135.75	0.000	322.5	0.50413	1.800E-02
414	0	404-U (+)	0	138048.	200.4	11.62	0.847	997.2	1.55020	2.831E+01
		405-IA(-)			200.4	11.62	0.847	997.2	1.55020	2.831E+01
416	0	415-B (+)	0	0.	350.7	135.75	0.000	322.5	0.50413	1.800E-02
		416-I (-)			350.7	135.75	0.000	322.5	0.50413	1.800E-02
417	0	406-U (+)	0	138048.	200.4	11.62	0.847	997.2	1.55020	2.831E+01
		175-IA(-)			200.4	11.62	0.847	997.2	1.55020	2.831E+01
418	0	415-U (+)	0	0.	350.7	135.75	0.000	322.5	0.50413	1.800E-02
		147-I (-)			350.7	135.75	0.000	322.5	0.50413	1.800E-02
419	0	405-U (+)	0	138048.	200.4	11.62	0.847	997.2	1.55020	2.831E+01
		406-IA(-)			200.4	11.62	0.847	997.2	1.55020	2.831E+01
420	0	37-UP(+)	0	3570698.	355.7	2829.65	-1.613	332.0	0.50488	1.782E-02
		106-IA(-)			355.7	2829.65	-1.613	332.0	0.50488	1.782E-02
421	0	413-B (+)	0	0.	350.7	135.75	0.000	322.5	0.50413	1.800E-02
		417-I (-)			350.7	135.75	0.000	322.5	0.50413	1.800E-02
450	2	450-U (+)	0	72884.	186.5	5.99	1.007	1141.7	1.84133	6.373E+01
		219-S (-)			186.2	5.76	1.008	1141.7	1.84576	6.636E+01
600	0	150-U (+)	0	7091397.	351.1	298.05	-0.086	323.2	0.50437	1.799E-02
		600-IA(-)			351.1	298.05	-0.086	323.2	0.50437	1.799E-02

IP7019282

** SAVE CASE **

STREAM PROPERTIES

STRM NO.	STRM TYPE	COMP FRM/TO ID	FLU ID	MASS FLOW (LBM/HR)	TEMP (F)	PRESS (PSIA)	QUAL (HUM) (-)	ENTH (B/LB)	ENTRPY (B/LB-F)	SPEC. VOLUME (FT3/LBM)
608	0	155-U (+)	0	7141395.	355.7	2830.70	-1.616	332.0	0.50488	1.782E-02
		608-I (-)			355.7	2830.70	-1.616	332.0	0.50488	1.782E-02
609	0	608-B (+)	0	0.	355.7	2830.70	-1.616	332.0	0.50488	1.782E-02
		400-I (-)			355.7	2830.70	-1.616	332.0	0.50488	1.782E-02
610	0	609-B (+)	0	0.	355.7	2830.70	-1.616	332.0	0.50488	1.782E-02
		610-IB(-)			355.7	2830.70	-1.616	332.0	0.50488	1.782E-02
611	0	608-U (+)	0	7141395.	355.7	2830.70	-1.616	332.0	0.50488	1.782E-02
		609-I (-)			355.7	2830.70	-1.616	332.0	0.50488	1.782E-02
612	2	609-U (+)	0	7141395.	355.7	2830.70	-1.616	332.0	0.50488	1.782E-02
		159-I (-)			355.8	2796.59	-1.540	332.0	0.50502	1.782E-02
613	0	610-U (+)	0	5795056.	634.3	630.88	1.145	1309.2	1.54550	9.376E-01
		15-T (-)			634.3	630.88	1.145	1309.2	1.54550	9.376E-01
684	0	3-E (+)	0	624126.	780.4	1097.86	1.289	1371.7	1.54384	6.069E-01
		401-I (-)			780.4	1097.86	1.289	1371.7	1.54384	6.069E-01
777	0	7-U (+)	0	5042936.	627.0	138.51	1.169	1340.4	1.73354	4.584E+00
		127-I (-)			627.0	138.51	1.169	1340.4	1.73354	4.584E+00
781	0	781-U (+)	0	1000097.	95.0	0.82	0.149	218.3	0.40053	6.029E+01
		16-D (-)			95.0	0.82	0.149	218.3	0.40053	6.029E+01
999	2	999-U (+)	0	73658.	167.7	5.69	0.976	1109.8	1.79638	6.362E+01
		319-S (-)			167.3	5.64	0.976	1109.8	1.79727	6.413E+01

(+) INDICATES STREAM START CONNECTION, (-) INDICATES STREAM END CONNECTION.

IP7019283

STREAM TRANSPORT PROPERTIES

STRM NO.	SPEC.HT. (BTU/LBM-F)	VISCOSITY (LBM/FT-HR)	THERM COND (BTU/HR-FT-F)
1	6.550E-01	6.859E-02	4.385E-02
	6.550E-01	6.859E-02	4.385E-02
3	6.379E-01	6.077E-02	3.721E-02
	6.379E-01	6.077E-02	3.721E-02
4	6.297E-01	5.183E-02	3.056E-02
	6.297E-01	5.183E-02	3.056E-02
5	5.362E-01	6.833E-02	3.919E-02
	5.362E-01	6.833E-02	3.919E-02
7	5.219E-01	6.095E-02	3.369E-02
	5.219E-01	6.095E-02	3.369E-02
8	4.945E-01	4.463E-02	2.282E-02
	4.945E-01	4.463E-02	2.282E-02
9	4.892E-01	4.049E-02	2.033E-02
	4.892E-01	4.049E-02	2.033E-02
10	4.876E-01	3.027E-02	1.457E-02
	4.876E-01	3.027E-02	1.457E-02
11	N.A.	8.911E-01	2.239E-02
	N.A.	8.911E-01	2.239E-02
12	N.A.	8.945E-01	2.230E-02
	N.A.	8.945E-01	2.230E-02
13	N.A.	1.565E+00	3.396E-02
	N.A.	1.565E+00	3.396E-02
14	N.A.	1.415E+00	3.439E-02
	N.A.	1.415E+00	3.439E-02
15	5.468E-01	7.312E-02	4.301E-02
	5.468E-01	7.312E-02	4.301E-02

IP7019284

** SAVE CASE **

STREAM TRANSPORT PROPERTIES

STRM NO.	SPEC.HT. (BTU/LBM-F)	VISCOSITY (LBM/FT-HR)	THERM COND (BTU/HR-FT-F)
16	N.A.	1.741E+00	3.233E-02
	N.A.	1.741E+00	3.233E-02
17	9.979E-01	1.500E+00	3.653E-01
	9.979E-01	1.500E+00	3.653E-01
18	9.982E-01	1.741E+00	3.594E-01
	9.982E-01	1.741E+00	3.594E-01
19	1.000E+00	9.336E-01	3.831E-01
	1.000E+00	9.336E-01	3.831E-01
20	9.981E-01	1.565E+00	3.635E-01
	9.981E-01	1.565E+00	3.635E-01
21	1.001E+00	9.190E-01	3.831E-01
	1.001E+00	9.190E-01	3.831E-01
22	9.982E-01	1.415E+00	3.675E-01
	9.982E-01	1.415E+00	3.675E-01
23	9.979E-01	1.705E+00	3.603E-01
	9.980E-01	1.737E+00	3.595E-01
24	1.005E+00	7.148E-01	3.909E-01
	1.005E+00	7.148E-01	3.909E-01
25	1.019E+00	5.039E-01	3.961E-01
	1.019E+00	5.039E-01	3.961E-01
26	1.028E+00	4.461E-01	3.956E-01
	1.028E+00	4.457E-01	3.954E-01
27	1.050E+00	3.697E-01	3.905E-01
	1.050E+00	3.697E-01	3.905E-01
28	5.066E-01	5.199E-02	2.753E-02
	5.066E-01	5.199E-02	2.753E-02

IP7019285

** SAVE CASE **

STREAM TRANSPORT PROPERTIES

STRM NO.	SPEC.HT. (BTU/LBM-F)	VISCOSITY (LBM/FT-HR)	THERM COND (BTU/HR-FT-F)
30	9.965E-01	1.391E+00	3.691E-01
	9.973E-01	1.383E+00	3.688E-01
31	9.975E-01	1.294E+00	3.714E-01
	9.975E-01	1.294E+00	3.714E-01
32	1.131E+00	2.608E-01	3.642E-01
	1.131E+00	2.607E-01	3.642E-01
33	1.238E+00	2.248E-01	3.355E-01
	1.238E+00	2.248E-01	3.355E-01
34	1.059E+00	3.220E-01	3.889E-01
	1.060E+00	3.220E-01	3.889E-01
35	1.181E+00	2.471E-01	3.516E-01
	1.181E+00	2.471E-01	3.516E-01
36	1.088E+00	3.046E-01	3.788E-01
	1.088E+00	3.046E-01	3.788E-01
37	1.057E+00	3.523E-01	3.885E-01
	1.057E+00	3.523E-01	3.885E-01
38	1.059E+00	3.221E-01	3.890E-01
	1.060E+00	3.221E-01	3.889E-01
39	1.181E+00	2.470E-01	3.515E-01
	1.181E+00	2.470E-01	3.515E-01
40	1.088E+00	3.047E-01	3.789E-01
	1.088E+00	3.047E-01	3.789E-01
41	1.131E+00	2.606E-01	3.641E-01
	1.131E+00	2.606E-01	3.641E-01
42	1.049E+00	3.698E-01	3.910E-01
	1.049E+00	3.698E-01	3.910E-01

IP7019286

STREAM TRANSPORT PROPERTIES

STRM NO.	SPEC.HT. (BTU/LBM-F)	VISCOSITY (LBM/FT-HR)	THERM COND (BTU/HR-FT-F)
43	1.049E+00	3.698E-01	3.910E-01
	1.049E+00	3.698E-01	3.910E-01
44	1.048E+00	3.718E-01	3.912E-01
	1.048E+00	3.718E-01	3.912E-01
45	1.057E+00	3.523E-01	3.885E-01
	1.057E+00	3.523E-01	3.885E-01
46	1.238E+00	2.248E-01	3.355E-01
	1.238E+00	2.248E-01	3.355E-01
47	6.297E-01	5.183E-02	3.056E-02
	6.297E-01	5.183E-02	3.056E-02
48	5.480E-01	5.260E-02	2.900E-02
	5.480E-01	5.260E-02	2.900E-02
49	9.984E-01	1.297E+00	3.708E-01
	9.984E-01	1.297E+00	3.708E-01
50	1.002E+00	8.609E-01	3.852E-01
	1.002E+00	8.609E-01	3.852E-01
51	1.007E+00	6.731E-01	3.919E-01
	1.007E+00	6.731E-01	3.919E-01
52	1.023E+00	4.815E-01	3.958E-01
	1.023E+00	4.815E-01	3.958E-01
54	6.717E-01	7.480E-02	4.962E-02
	6.717E-01	7.480E-02	4.962E-02
55	1.050E+00	3.697E-01	3.905E-01
	1.050E+00	3.697E-01	3.905E-01
56	1.050E+00	3.697E-01	3.905E-01
	1.050E+00	3.697E-01	3.905E-01

IP7019287

** SAVE CASE **

STREAM TRANSPORT PROPERTIES

STRM NO.	SPEC.HT. (BTU/LBM-F)	VISCOSITY (LBM/FT-HR)	THERM COND (BTU/HR-FT-F)
57	1.006E+00	7.152E-01	3.905E-01
	1.006E+00	7.152E-01	3.905E-01
58	9.965E-01	1.414E+00	3.684E-01
	9.965E-01	1.414E+00	3.684E-01
59	6.758E-01	7.509E-02	5.004E-02
	6.758E-01	7.509E-02	5.004E-02
60	9.965E-01	1.414E+00	3.684E-01
	9.965E-01	1.414E+00	3.684E-01
61	9.965E-01	1.414E+00	3.684E-01
	9.965E-01	1.414E+00	3.684E-01
62	9.979E-01	1.487E+00	3.656E-01
	9.979E-01	1.487E+00	3.656E-01
63	N.A.	1.415E+00	3.693E-02
	N.A.	1.415E+00	3.693E-02
64	N.A.	1.741E+00	2.887E-02
	N.A.	1.741E+00	2.887E-02
66	6.289E-01	5.189E-02	3.058E-02
	6.289E-01	5.189E-02	3.058E-02
67	5.468E-01	7.311E-02	4.301E-02
	5.468E-01	7.311E-02	4.301E-02
68	5.362E-01	6.832E-02	3.918E-02
	5.362E-01	6.832E-02	3.918E-02
69	1.001E+00	9.091E-01	3.835E-01
	1.001E+00	9.091E-01	3.835E-01
70	N.A.	9.088E-01	1.297E-02
	N.A.	9.088E-01	1.297E-02

IP7019288

STREAM TRANSPORT PROPERTIES

STRM NO.	SPEC.HT. (BTU/LBM-F)	VISCOSITY (LBM/FT-HR)	THERM COND (BTU/HR-FT-F)
71	1.000E+00	9.254E-01	3.833E-01
	1.000E+00	9.254E-01	3.833E-01
72	1.005E+00	7.148E-01	3.909E-01
	1.005E+00	7.148E-01	3.909E-01
73	1.005E+00	7.148E-01	3.909E-01
	1.005E+00	7.148E-01	3.909E-01
74	1.019E+00	5.039E-01	3.961E-01
	1.019E+00	5.039E-01	3.961E-01
75	1.028E+00	4.457E-01	3.954E-01
	1.028E+00	4.457E-01	3.954E-01
76	9.869E-01	1.742E+00	3.652E-01
	9.869E-01	1.742E+00	3.652E-01
77	N.A.	9.052E-01	2.292E-02
	N.A.	9.052E-01	2.292E-02
79	N.A.	8.972E-01	2.255E-02
	N.A.	8.972E-01	2.255E-02
80	N.A.	9.086E-01	2.282E-02
	N.A.	9.190E-01	2.252E-02
81	N.A.	9.006E-01	2.245E-02
	N.A.	9.091E-01	2.220E-02
82	6.717E-01	7.480E-02	4.962E-02
	6.717E-01	7.480E-02	4.962E-02
83	N.A.	7.152E-01	7.554E-02
	N.A.	7.152E-01	7.554E-02
84	N.A.	7.309E-01	7.113E-02
	N.A.	7.309E-01	7.113E-02

IP7019289

STREAM TRANSPORT PROPERTIES

STRM NO.	SPEC.HT. (BTU/LBM-F)	VISCOSITY (LBM/FT-HR)	THERM COND (BTU/HR-FT-F)
85	5.480E-01	5.260E-02	2.900E-02
	5.480E-01	5.260E-02	2.900E-02
86	6.212E-01	5.598E-02	3.319E-02
	6.212E-01	5.598E-02	3.319E-02
87	N.A.	1.741E+00	2.887E-02
	N.A.	1.741E+00	2.887E-02
88	N.A.	1.741E+00	2.887E-02
	N.A.	1.741E+00	2.887E-02
89	N.A.	1.741E+00	2.887E-02
	N.A.	1.741E+00	2.887E-02
90	N.A.	1.741E+00	2.887E-02
	N.A.	1.741E+00	2.887E-02
93	1.181E+00	2.471E-01	3.515E-01
	1.181E+00	2.471E-01	3.515E-01
94	1.112E+00	2.826E-01	3.711E-01
	1.112E+00	2.826E-01	3.711E-01
95	1.072E+00	3.251E-01	3.839E-01
	1.072E+00	3.251E-01	3.839E-01
96	6.297E-01	5.183E-02	3.056E-02
	6.297E-01	5.183E-02	3.056E-02
97	5.066E-01	5.184E-02	2.744E-02
	5.066E-01	5.184E-02	2.744E-02
98	5.066E-01	5.184E-02	2.744E-02
	5.066E-01	5.184E-02	2.744E-02
99	1.050E+00	3.697E-01	3.905E-01
	1.050E+00	3.697E-01	3.905E-01

IP7019290

STREAM TRANSPORT PROPERTIES

STRM NO.	SPEC.HT. (BTU/LBM-F)	VISCOSITY (LBM/FT-HR)	THERM COND (BTU/HR-FT-F)
100	1.057E+00	3.523E-01	3.885E-01
	1.057E+00	3.523E-01	3.885E-01
101	1.049E+00	3.698E-01	3.910E-01
	1.049E+00	3.698E-01	3.910E-01
102	6.226E-01	5.483E-02	3.247E-02
	6.226E-01	5.483E-02	3.247E-02
104	9.965E-01	1.414E+00	3.684E-01
	9.965E-01	1.414E+00	3.684E-01
105	9.979E-01	1.492E+00	3.655E-01
	9.979E-01	1.492E+00	3.655E-01
106	1.034E+00	3.744E-01	3.978E-01
	1.034E+00	3.744E-01	3.978E-01
107	9.990E-01	2.286E+00	3.487E-01
	9.990E-01	2.286E+00	3.487E-01
108	9.990E-01	2.286E+00	3.487E-01
	9.984E-01	2.047E+00	3.531E-01
109	1.057E+00	3.523E-01	3.885E-01
	1.057E+00	3.523E-01	3.885E-01
110	1.057E+00	3.523E-01	3.885E-01
	1.057E+00	3.523E-01	3.885E-01
111	1.057E+00	3.523E-01	3.885E-01
	1.057E+00	3.523E-01	3.885E-01
114	1.238E+00	2.248E-01	3.355E-01
	1.239E+00	2.247E-01	3.354E-01
115	1.238E+00	2.248E-01	3.355E-01
	1.238E+00	2.248E-01	3.355E-01

IP7019291

** SAVE CASE **

STREAM TRANSPORT PROPERTIES

STRM NO.	SPEC.HT. (BTU/LBM-F)	VISCOSITY (LBM/FT-HR)	THERM COND (BTU/HR-FT-F)
116	6.758E-01	7.509E-02	5.004E-02
	6.758E-01	7.509E-02	5.004E-02
117	6.758E-01	7.509E-02	5.004E-02
	6.758E-01	7.509E-02	5.004E-02
118	6.717E-01	7.480E-02	4.962E-02
	6.717E-01	7.480E-02	4.962E-02
119	6.758E-01	7.509E-02	5.004E-02
	6.758E-01	7.509E-02	5.004E-02
120	6.550E-01	6.859E-02	4.385E-02
	6.550E-01	6.859E-02	4.385E-02
121	6.297E-01	5.183E-02	3.056E-02
	6.297E-01	5.183E-02	3.056E-02
122	6.717E-01	7.480E-02	4.962E-02
	6.717E-01	7.480E-02	4.962E-02
123	6.297E-01	5.183E-02	3.056E-02
	6.297E-01	5.183E-02	3.056E-02
124	6.297E-01	5.183E-02	3.056E-02
	6.297E-01	5.183E-02	3.056E-02
125	6.717E-01	7.480E-02	4.962E-02
	6.717E-01	7.480E-02	4.962E-02
126	6.289E-01	5.189E-02	3.058E-02
	6.289E-01	5.189E-02	3.058E-02
127	5.066E-01	5.199E-02	2.753E-02
	5.063E-01	5.198E-02	2.751E-02
128	5.066E-01	5.199E-02	2.753E-02
	5.066E-01	5.199E-02	2.753E-02

IP7019292

STREAM TRANSPORT PROPERTIES

STRM NO.	SPEC.HT. (BTU/LBM-F)	VISCOSITY (LBM/FT-HR)	THERM COND (BTU/HR-FT-F)
129	9.990E-01	2.286E+00	3.487E-01
	9.984E-01	2.051E+00	3.530E-01
130	6.297E-01	5.183E-02	3.056E-02
	6.297E-01	5.183E-02	3.056E-02
131	6.717E-01	7.480E-02	4.962E-02
	6.717E-01	7.480E-02	4.962E-02
132	9.986E-01	1.216E+00	3.733E-01
	9.986E-01	1.216E+00	3.733E-01
133	9.973E-01	1.383E+00	3.688E-01
	9.973E-01	1.383E+00	3.688E-01
134	9.973E-01	1.383E+00	3.688E-01
	9.973E-01	1.383E+00	3.688E-01
135	9.982E-01	1.415E+00	3.675E-01
	9.982E-01	1.415E+00	3.675E-01
136	6.297E-01	5.183E-02	3.056E-02
	6.297E-01	5.183E-02	3.056E-02
137	6.297E-01	5.183E-02	3.056E-02
	6.297E-01	5.183E-02	3.056E-02
138	1.000E+00	9.254E-01	3.833E-01
	1.000E+00	9.254E-01	3.833E-01
139	1.005E+00	7.148E-01	3.909E-01
	1.005E+00	7.148E-01	3.909E-01
140	1.019E+00	5.039E-01	3.961E-01
	1.019E+00	5.039E-01	3.961E-01
141	4.805E-01	5.049E-02	2.595E-02
	4.805E-01	5.049E-02	2.595E-02

IP7019293

STREAM TRANSPORT PROPERTIES

STRM NO.	SPEC.HT. (BTU/LBM-F)	VISCOSITY (LBM/FT-HR)	THERM COND (BTU/HR-FT-F)
142	5.066E-01	5.184E-02	2.744E-02
	5.061E-01	5.182E-02	2.741E-02
143	5.066E-01	5.184E-02	2.744E-02
	5.066E-01	5.184E-02	2.744E-02
144	1.000E+00	9.254E-01	3.833E-01
	1.000E+00	9.254E-01	3.833E-01
145	1.002E+00	8.609E-01	3.852E-01
	1.002E+00	8.609E-01	3.852E-01
146	1.002E+00	8.609E-01	3.852E-01
	N.A.	9.088E-01	3.807E-01
147	1.005E+00	7.148E-01	3.909E-01
	1.005E+00	7.148E-01	3.909E-01
148	5.066E-01	5.199E-02	2.753E-02
	5.066E-01	5.199E-02	2.753E-02
149	1.007E+00	6.731E-01	3.919E-01
	1.007E+00	6.731E-01	3.919E-01
150	1.019E+00	5.039E-01	3.961E-01
	1.019E+00	5.039E-01	3.961E-01
151	5.066E-01	5.184E-02	2.744E-02
	5.064E-01	5.183E-02	2.743E-02
152	5.066E-01	5.184E-02	2.744E-02
	5.064E-01	5.183E-02	2.743E-02
153	9.975E-01	1.294E+00	3.714E-01
	9.975E-01	1.294E+00	3.714E-01
154	9.975E-01	1.294E+00	3.714E-01
	9.975E-01	1.294E+00	3.714E-01

IP7019294

STREAM TRANSPORT PROPERTIES

STRM NO.	SPEC.HT. (BTU/LBM-F)	VISCOSITY (LBM/FT-HR)	THERM COND (BTU/HR-FT-F)
155	9.975E-01	1.294E+00	3.714E-01
	9.975E-01	1.294E+00	3.714E-01
156	6.717E-01	7.480E-02	4.962E-02
	6.717E-01	7.480E-02	4.962E-02
157	6.717E-01	7.480E-02	4.962E-02
	6.717E-01	7.480E-02	4.962E-02
158	1.034E+00	3.742E-01	3.977E-01
	1.034E+00	3.742E-01	3.977E-01
159	1.034E+00	3.742E-01	3.977E-01
	1.034E+00	3.742E-01	3.977E-01
160	1.057E+00	3.523E-01	3.885E-01
	1.057E+00	3.523E-01	3.885E-01
161	1.088E+00	3.046E-01	3.788E-01
	1.088E+00	3.046E-01	3.788E-01
162	1.181E+00	2.471E-01	3.516E-01
	1.181E+00	2.471E-01	3.516E-01
163	1.181E+00	2.471E-01	3.516E-01
	1.181E+00	2.471E-01	3.516E-01
164	1.088E+00	3.046E-01	3.788E-01
	1.088E+00	3.046E-01	3.788E-01
165	1.057E+00	3.523E-01	3.885E-01
	1.057E+00	3.523E-01	3.885E-01
166	5.216E-01	6.171E-02	3.418E-02
	5.214E-01	6.170E-02	3.416E-02
167	6.289E-01	5.189E-02	3.058E-02
	6.274E-01	5.184E-02	3.051E-02

IP7019295

STREAM TRANSPORT PROPERTIES

STRM NO.	SPEC.HT. (BTU/LBM-F)	VISCOSITY (LBM/FT-HR)	THERM COND (BTU/HR-FT-F)
168	6.372E-01	6.074E-02	3.717E-02
	6.359E-01	6.068E-02	3.709E-02
169	6.372E-01	6.074E-02	3.717E-02
	6.360E-01	6.068E-02	3.709E-02
170	6.289E-01	5.189E-02	3.058E-02
	6.276E-01	5.185E-02	3.052E-02
171	6.289E-01	5.189E-02	3.058E-02
	6.289E-01	5.189E-02	3.058E-02
172	1.034E+00	3.742E-01	3.977E-01
	1.034E+00	3.742E-01	3.977E-01
173	1.057E+00	3.523E-01	3.885E-01
	1.057E+00	3.523E-01	3.885E-01
174	1.057E+00	3.523E-01	3.885E-01
	1.057E+00	3.523E-01	3.885E-01
175	1.088E+00	3.047E-01	3.789E-01
	1.088E+00	3.047E-01	3.789E-01
176	1.181E+00	2.470E-01	3.515E-01
	1.181E+00	2.470E-01	3.515E-01
177	1.034E+00	3.742E-01	3.977E-01
	1.034E+00	3.742E-01	3.977E-01
178	1.181E+00	2.470E-01	3.515E-01
	1.181E+00	2.470E-01	3.515E-01
179	1.088E+00	3.047E-01	3.789E-01
	1.088E+00	3.047E-01	3.789E-01
180	6.550E-01	6.859E-02	4.385E-02
	6.550E-01	6.859E-02	4.385E-02

IP7019296

** SAVE CASE **

STREAM TRANSPORT PROPERTIES

STRM NO.	SPEC.HT. (BTU/LBM-F)	VISCOSITY (LBM/FT-HR)	THERM COND (BTU/HR-FT-F)
181	5.066E-01	5.199E-02	2.753E-02
	5.066E-01	5.199E-02	2.753E-02
182	5.480E-01	5.260E-02	2.900E-02
	5.480E-01	5.260E-02	2.900E-02
183	6.297E-01	5.183E-02	3.056E-02
	6.297E-01	5.183E-02	3.056E-02
184	6.297E-01	5.183E-02	3.056E-02
	6.297E-01	5.183E-02	3.056E-02
186	6.297E-01	5.183E-02	3.056E-02
	6.297E-01	5.183E-02	3.056E-02
187	1.050E+00	3.697E-01	3.905E-01
	1.050E+00	3.697E-01	3.905E-01
191	1.050E+00	3.697E-01	3.905E-01
	1.050E+00	3.697E-01	3.905E-01
192	1.050E+00	3.697E-01	3.905E-01
	1.050E+00	3.697E-01	3.905E-01
193	1.050E+00	3.697E-01	3.905E-01
	1.050E+00	3.697E-01	3.905E-01
194	1.050E+00	3.697E-01	3.905E-01
	1.050E+00	3.697E-01	3.905E-01
196	1.050E+00	3.697E-01	3.905E-01
	1.050E+00	3.697E-01	3.905E-01
197	1.050E+00	3.697E-01	3.905E-01
	1.050E+00	3.697E-01	3.905E-01
199	1.048E+00	3.718E-01	3.912E-01
	1.048E+00	3.718E-01	3.912E-01

IP7019297

STREAM TRANSPORT PROPERTIES

STRM NO.	SPEC.HT. (BTU/LBM-F)	VISCOSITY (LBM/FT-HR)	THERM COND (BTU/HR-FT-F)
200	1.050E+00	3.697E-01	3.905E-01
	1.050E+00	3.697E-01	3.905E-01
201	1.048E+00	3.718E-01	3.912E-01
	1.048E+00	3.718E-01	3.912E-01
202	1.048E+00	3.718E-01	3.912E-01
	1.048E+00	3.718E-01	3.912E-01
203	1.048E+00	3.718E-01	3.912E-01
	1.048E+00	3.718E-01	3.912E-01
204	1.049E+00	3.698E-01	3.910E-01
	1.049E+00	3.698E-01	3.910E-01
205	1.034E+00	3.744E-01	3.978E-01
	1.034E+00	3.744E-01	3.978E-01
207	1.050E+00	3.697E-01	3.905E-01
	1.050E+00	3.697E-01	3.905E-01
208	N.A.	7.309E-01	7.113E-02
	N.A.	7.309E-01	7.113E-02
210	5.389E-01	5.192E-02	2.833E-02
	5.389E-01	5.192E-02	2.833E-02
211	4.805E-01	5.049E-02	2.595E-02
	4.805E-01	5.049E-02	2.595E-02
212	9.982E-01	1.415E+00	3.675E-01
	9.982E-01	1.415E+00	3.675E-01
213	9.965E-01	1.414E+00	3.684E-01
	9.965E-01	1.414E+00	3.684E-01
214	1.000E+00	2.710E+00	3.421E-01
	1.000E+00	2.710E+00	3.421E-01

IP7019298

STREAM TRANSPORT PROPERTIES

STRM NO.	SPEC.HT. (BTU/LBM-F)	VISCOSITY (LBM/FT-HR)	THERM COND (BTU/HR-FT-F)
215	9.981E-01	1.672E+00	3.609E-01
	9.981E-01	1.672E+00	3.609E-01
218	1.007E+00	6.731E-01	3.919E-01
	1.007E+00	6.731E-01	3.919E-01
219	1.023E+00	4.815E-01	3.958E-01
	1.023E+00	4.815E-01	3.958E-01
220	1.023E+00	4.815E-01	3.958E-01
	1.023E+00	4.815E-01	3.958E-01
222	6.758E-01	7.509E-02	5.004E-02
	6.758E-01	7.509E-02	5.004E-02
223	1.050E+00	3.697E-01	3.905E-01
	1.050E+00	3.697E-01	3.905E-01
224	5.216E-01	6.171E-02	3.418E-02
	5.214E-01	6.170E-02	3.416E-02
225	1.000E+00	9.201E-01	3.836E-01
	1.000E+00	9.201E-01	3.836E-01
226	1.001E+00	9.058E-01	3.836E-01
	1.001E+00	9.058E-01	3.836E-01
227	N.A.	7.309E-01	8.945E-02
	N.A.	7.309E-01	8.945E-02
301	1.001E+00	9.087E-01	3.835E-01
	1.001E+00	9.087E-01	3.835E-01
302	1.001E+00	9.097E-01	3.835E-01
	1.001E+00	9.097E-01	3.835E-01
303	1.001E+00	9.098E-01	3.835E-01
	1.001E+00	9.098E-01	3.835E-01

IP70192299

** SAVE CASE **

STREAM TRANSPORT PROPERTIES

STRM NO.	SPEC.HT. (BTU/LBM-F)	VISCOSITY (LBM/FT-HR)	THERM COND (BTU/HR-FT-F)
305	4.876E-01	3.027E-02	1.457E-02
	4.876E-01	3.027E-02	1.457E-02
306	4.876E-01	3.027E-02	1.457E-02
	4.876E-01	3.027E-02	1.457E-02
307	4.876E-01	3.027E-02	1.457E-02
	4.876E-01	3.027E-02	1.457E-02
319	1.000E+00	9.258E-01	3.834E-01
	1.000E+00	9.258E-01	3.834E-01
321	1.001E+00	9.115E-01	3.834E-01
	1.001E+00	9.115E-01	3.834E-01
334	1.000E+00	9.265E-01	3.834E-01
	1.000E+00	9.254E-01	3.833E-01
401	6.372E-01	6.074E-02	3.717E-02
	6.372E-01	6.074E-02	3.717E-02
402	6.289E-01	5.189E-02	3.058E-02
	6.289E-01	5.189E-02	3.058E-02
403	5.216E-01	6.171E-02	3.418E-02
	5.216E-01	6.171E-02	3.418E-02
404	4.931E-01	4.614E-02	2.368E-02
	4.929E-01	4.614E-02	2.367E-02
405	4.880E-01	4.108E-02	2.064E-02
	4.874E-01	4.106E-02	2.062E-02
406	4.808E-01	3.138E-02	1.510E-02
	4.798E-01	3.137E-02	1.508E-02
407	6.372E-01	6.074E-02	3.717E-02
	6.372E-01	6.074E-02	3.717E-02

IP7019300

STREAM TRANSPORT PROPERTIES

STRM NO.	SPEC.HT. (BTU/LBM-F)	VISCOSITY (LBM/FT-HR)	THERM COND (BTU/HR-FT-F)
408	6.289E-01	5.189E-02	3.058E-02
	6.289E-01	5.189E-02	3.058E-02
409	5.216E-01	6.171E-02	3.418E-02
	5.216E-01	6.171E-02	3.418E-02
411	5.216E-01	6.171E-02	3.418E-02
	5.216E-01	6.171E-02	3.418E-02
413	1.050E+00	3.697E-01	3.905E-01
	1.050E+00	3.697E-01	3.905E-01
414	N.A.	7.309E-01	7.113E-02
	N.A.	7.309E-01	7.113E-02
416	1.050E+00	3.697E-01	3.905E-01
	1.050E+00	3.697E-01	3.905E-01
417	N.A.	7.309E-01	7.113E-02
	N.A.	7.309E-01	7.113E-02
418	1.050E+00	3.697E-01	3.905E-01
	1.050E+00	3.697E-01	3.905E-01
419	N.A.	7.309E-01	7.113E-02
	N.A.	7.309E-01	7.113E-02
420	9.878E-01	1.423E+00	3.732E-01
	9.878E-01	1.423E+00	3.732E-01
421	1.050E+00	3.697E-01	3.905E-01
	1.050E+00	3.697E-01	3.905E-01
450	4.722E-01	2.856E-02	1.344E-02
	4.712E-01	2.855E-02	1.342E-02
600	1.049E+00	3.698E-01	3.910E-01
	1.049E+00	3.698E-01	3.910E-01

IP7019301

** SAVE CASE **

STREAM TRANSPORT PROPERTIES

STRM NO.	SPEC.HT. (BTU/LBM-F)	VISCOSITY (LBM/FT-HR)	THERM COND (BTU/HR-FT-F)
608	1.034E+00	3.744E-01	3.978E-01
	1.034E+00	3.744E-01	3.978E-01
609	1.034E+00	3.744E-01	3.978E-01
	1.034E+00	3.744E-01	3.978E-01
610	1.034E+00	3.744E-01	3.978E-01
	1.034E+00	3.744E-01	3.978E-01
611	1.034E+00	3.744E-01	3.978E-01
	1.034E+00	3.744E-01	3.978E-01
612	1.034E+00	3.744E-01	3.978E-01
	1.034E+00	3.742E-01	3.977E-01
613	6.289E-01	5.189E-02	3.058E-02
	6.289E-01	5.189E-02	3.058E-02
684	6.372E-01	6.074E-02	3.717E-02
	6.372E-01	6.074E-02	3.717E-02
777	5.066E-01	5.199E-02	2.753E-02
	5.066E-01	5.199E-02	2.753E-02
781	N.A.	1.740E+00	3.074E-01
	N.A.	1.740E+00	3.074E-01
999	N.A.	9.091E-01	2.157E-02
	N.A.	9.115E-01	2.150E-02

IP7019302

** SAVE CASE **

PROPERTIES FOR ACTIVE STREAMS

STRM	STRM TYPE	FROM /TO	FLU ID	MASS FLOW (LBM/HR)	TEMP (F)	PRESS (PSIA)	QUALITY (R HUM) (-)	ENTHALPY (B/LB)	PDRP/P (-)
23	2	16-T	0	95771455.	96.9	50.0	-0.2004	65.0	0.000
		18-T			95.1	50.0	-0.2023	63.3	
26	2	22-T	0	5274273.	299.6	185.4	-0.0933	269.6	0.269
		75-IA			299.7	135.6	-0.0606	269.6	
30	2	30-T	0	5274273.	116.8	434.8	-0.4503	85.9	0.457
		133-I			117.3	236.1	-0.3431	85.9	
32	2	26-T	0	3570698.	491.5	2774.8	-0.9940	477.7	0.002
		28-T			491.4	2768.9	-0.9856	477.7	
34	2	24-T	0	3570698.	406.5	2785.3	-1.3324	385.0	0.004
		26-T			406.5	2774.8	-1.3133	385.0	
38	2	25-T	0	3570698.	406.4	2785.3	-1.3327	384.9	0.004
		27-T			406.4	2774.8	-1.3137	384.9	
41	2	27-T	0	3570698.	491.6	2774.8	-0.9933	478.0	0.002
		29-T			491.6	2768.9	-0.9848	477.9	
50	2	20-D	0	654984.	175.4	13.1	-0.0317	143.4	0.215
		139-I			175.4	10.3	-0.0195	143.4	
67	2	67-U	0	5797566.	1000.0	588.6	1.4277	1518.3	0.000
		5-I			1000.0	588.6	1.4277	1518.3	
80	2	46-E	0	71799.	167.8	5.7	0.9734	1106.5	0.036
		19-S			166.2	5.5	0.9740	1106.5	
81	2	47-E	0	68603.	169.0	5.9	0.9745	1108.1	0.030
		999-IA			167.7	5.7	0.9750	1108.1	
108	2	61-U	0	95771455.	72.3	50.0	-0.2269	40.5	0.000
		16-T			81.0	50.0	-0.2175	49.2	
114	2	114-U	0	7141395.	556.9	2768.9	-0.7214	554.9	0.008
		64-I			556.9	2748.9	-0.6974	554.9	

IP7019303

** SAVE CASE **

PROPERTIES FOR ACTIVE STREAMS

STRM	STRM TYPE	FROM /TO	FLU ID	MASS FLOW (LBM/HR)	TEMP (F)	PRESS (PSIA)	QUALITY (R HUM) (-)	ENTHALPY (B/LB)	PDRP/P (-)
129	2	61-B	0	47878545.	72.3	50.0	-0.2269	40.5	0.000
		17-T			80.9	50.0	-0.2176	49.1	
142	2	142-U	0	249561.	624.5	138.5	1.1679	1339.1	0.020
		23-S			624.1	135.7	1.1680	1339.1	
146	2	139-U	0	654984.	175.4	10.3	-0.0195	143.4	0.446
		65-I			167.8	5.7	0.0076	143.4	
151	2	142-B	0	131828.	624.5	138.5	1.1679	1339.1	0.010
		38-IT			624.3	137.1	1.1680	1339.1	
152	2	143-B	0	126636.	624.5	138.5	1.1679	1339.1	0.010
		37-IT			624.3	137.1	1.1680	1339.1	
159	2	159-U	0	7141395.	355.8	2796.6	-1.5400	332.0	0.004
		158-I			355.8	2785.3	-1.5169	332.0	
166	2	166-U	0	142383.	799.0	262.1	1.2681	1422.3	0.008
		24-S			798.8	260.0	1.2680	1422.3	
167	2	167-U	0	328925.	634.3	630.9	1.1459	1309.2	0.011
		26-S			633.4	623.8	1.1454	1309.2	
168	2	168-U	0	312276.	780.4	1097.9	1.2898	1371.7	0.010
		28-S			779.5	1087.2	1.2882	1371.7	
169	2	168-B	0	311850.	780.4	1097.9	1.2898	1371.7	0.009
		29-S			779.5	1087.9	1.2883	1371.7	
170	2	167-B	0	330051.	634.3	630.9	1.1459	1309.2	0.009
		27-S			633.6	624.9	1.1455	1309.2	
224	2	166-B	0	142078.	799.0	262.1	1.2681	1422.3	0.009
		25-S			798.8	259.7	1.2680	1422.3	
334	2	334-U	0	5274273.	165.3	236.1	-0.2854	133.8	0.215
		71-IT			165.4	185.4	-0.2533	133.8	

IP7019304

** SAVE CASE **

PROPERTIES FOR ACTIVE STREAMS

STRM	STRM TYPE	FROM /TO	FLU ID	MASS FLOW (LBM/HR)	TEMP (F)	PRESS (PSIA)	QUALITY (R HUM) (-)	ENTHALPY (B/LB)	PDRP/P (-)
405	2	9-E	0	324513.	430.0	45.2	1.0842	1250.5	0.027
		21-S			429.7	44.0	1.0847	1250.5	
406	2	10-E	0	182445.	245.4	13.6	1.0186	1166.9	0.039
		20-S			245.0	13.1	1.0193	1166.9	
450	2	450-U	0	72884.	186.5	6.0	1.0078	1141.7	0.040
		219-S			186.2	5.8	1.0085	1141.7	
612	2	609-U	0	7141395.	355.7	2830.7	-1.6161	332.0	0.012
		159-I			355.8	2796.6	-1.5400	332.0	
999	2	999-U	0	73658.	167.7	5.7	0.9767	1109.8	0.008
		319-S			167.3	5.6	0.9769	1109.8	

(+) INDICATES STREAM START CONNECTION, (-) INDICATES STREAM END CONNECTION.

IP7019305

** SAVE CASE **

COMPARISON OF COMPONENT PORT TEST DATA WITH PEPSE EMPLOYED STREAM PROPERTIES

STREAM NUMBER	STRM TYPE	PEPSE/ TEST	STREAM START/ END	TEMPERATURE (F)	THERMO PRESSURE (PSIA)	QUALITY (-)
15	0	PEPSE	START	1000.0		
		TEST	START	1000.0		
57	0	PEPSE	START			0.000
		TEST	START			0.000

IP7019306

** SAVE CASE **

DETAILED TURBINE PERFORMANCE TABLE A

COMPONENT	NUM FLOW ENDS	STAGE GRP EFFCY (-)	MECH POWER (MW)	BOWL FLOW COEFF (*)	SHELL FLOW COEFF (*)	EXTRACT FLOW STEAM EXTRACTION (L B M / H R)	EXTRACT FLOW LIQUID REMOVED (L B M / H R)
1/GENL	1	0.87440	7.93091E+01	84146.	111688.	0.	0.
3/	1	0.91408	1.06810E+02	111688.	151189.	624126.	0.
4/	1	0.97302	1.19463E+02	151189.	N.A.	0.	0.
	SECTION POWER 3.05582E+02						
	SECTION EFFICIENCY AT LOAD = 0.93644 (RE THROTTLE INLET = 0.91989)						
5/	2	0.84444	6.88813E+01	286655.	381433.	0.	0.
6/	2	0.92394	1.05727E+02	381387.	562022.	252048.	0.
					+ TIP LKG	32413.	
7/	2	0.92199	1.21221E+02	562022.	N.A.	487328.	0.
	SECTION POWER 2.95829E+02						
	SECTION EFFICIENCY AT LOAD = 0.91550						
8/	6	0.83052	8.90224E+01	920978.	1636037.	115608.	0.
					+ TIP LKG	32417.	
9/	6	0.82727	4.88827E+01	1636037.	2249965.	275487.	0.
					+ TIP LKG	49026.	
10/	6	0.89214	1.18440E+02	2249965.	2118573.	160656.	0.
					+ TIP LKG	21789.	
46/	2	0.81987	2.13357E+01	2118572.	4574689.	71799.	0.
13/	2	0.65388	2.69571E+01	4574689.	N.A.	0.	0.
	SECTION POWER 3.04637E+02						
	SECTION EFFICIENCY AT LOAD = 0.81978						
47/	2	0.81824	2.06312E+01	2117937.	4462408.	68603.	0.
12/	2	0.57760	2.81908E+01	4462408.	N.A.	0.	0.
	SECTION POWER 4.88219E+01						
	SECTION EFFICIENCY AT LOAD = 0.78881						
11/	2	0.82341	2.02487E+01	2117937.	4389503.	62307.	0.
14/	2	0.72563	2.62128E+01	4389503.	N.A.	0.	0.
	SECTION POWER 4.64616E+01						
	SECTION EFFICIENCY AT LOAD = 0.84326						
37/GTDM	1	0.86181	1.11884E+01	4389503.	N.A.	N.A.	N.A.

IP7019307

** SAVE CASE **

DETAILED TURBINE PERFORMANCE TABLE B

COMPONENT	STG GROUP BOWL FLOW (LBM/HR)	PRESSURE BOWL (PSIA)	PRESSURE SHELL (PSIA)	ENTHALPY BOWL (BTU/LBM)	ENTHALPY SHELL (BTU/LBM)	ENTROPY BOWL (BTU/LB-F)	ENTROPY SHELL (BTU/LB-F)	PRESS RATIO (-)	EXTR PRESS DROP (-)	MOIST REMOV EFFCT (-)
1/GENL	7104351.	2345.97	1710.97	1461.2	1423.1	1.535	1.539	1.37	.00	N.A.
3/	7087192.	1710.97	1103.37	1423.1	1371.7	1.539	1.543	1.55	.00	N.A.
4/	6463066.	1103.37	630.88	1371.7	1308.6	1.543	1.545	1.75	.00	N.A.
5/	5797566.	588.61	428.72	1518.3	1477.8	1.718	1.724	1.37	.00	N.A.
6/	5814725.	428.72	265.07	1477.6	1415.2	1.724	1.728	1.62	.01	N.A.
7/	5530264.	265.07	138.51	1415.2	1340.4	1.728	1.734	1.91	.00	N.A.
8/	5036684.	136.92	69.98	1340.4	1279.7	1.735	1.748	1.96	.01	N.A.
9/	4888659.	69.98	45.86	1279.7	1245.3	1.748	1.756	1.53	.01	N.A.
10/	4564146.	45.86	13.82	1245.3	1156.3	1.756	1.772	3.32	.01	N.A.
46/	1460859.	13.82	5.77	1156.3	1106.5	1.772	1.790	2.40	.01	N.A.
13/	1389060.	5.77	1.10	1106.5	1040.3	1.790	1.852	5.24	.00	N.A.
47/	1460421.	13.82	5.93	1156.3	1108.1	1.772	1.789	2.33	.01	N.A.
12/	1391818.	5.93	0.82	1108.1	1039.0	1.789	1.880	7.28	.00	N.A.
11/	1460421.	13.82	6.07	1156.3	1109.0	1.772	1.788	2.28	.01	N.A.
14/	1398114.	6.07	1.47	1109.0	1045.0	1.788	1.830	4.13	.00	N.A.
37/STPM	126636.	137.11	1.47	1339.1	1037.7	1.733	1.818	93.	N.A.	N.A.
38/	131828.	137.11	0.82	1339.1	1049.3	1.733	1.899	168.	N.A.	N.A.

DETAILED TURBINE PERFORMANCE TABLE C

BASE END POINT PRESSURE IS 1.500 IN.HG

COMP NUMB	ANNULUS VELOCITY ACTUAL (FT/SEC)	ANNULUS VELOCITY SONIC (FT/SEC)	EFFICIENCY AT BASE END PRESSURE (-)	EXHAUST LOSS DRY (BTU/LBM)	EXHAUST LOSS MOIST CORR'D (BTU/LBM)	ENERGY END POINTS ELEP BASE P (B T U / L B M)	ENERGY END POINTS ELEP COND P (B T U / L B M)	ENERGY END POINTS ELEP CHOK P (B T U / L B M)	CHOKE PRESS (PSIA)

IP7019308

DETAILED TURBINE PERFORMANCE TABLE E
LEAKAGES OF INLET FLOWS

COMPONENT	LEAKAGE TO EXTRACTION (LBM/HR)
6/GENL	3.24128E+04
8/GENL	3.24172E+04
9/GENL	4.90264E+04
10/GENL	2.17892E+04

IP7019309

** SAVE CASE **

DETAILED FEEDWATER HEATER PERFORMANCE OUTPUT - TABLE A
(EXTRACTION FLOW UPDATING BEGINS AT ITERATION 3)

HTR NO.	COMP NO.	COMPONENT DESCRIPTION	HEAT TRANSFER/DEG* CONDENSING SECTION (B T U / H R - F)	HEAT TRANSFER/DEG* SUBCOOL/MX SECTION (B T U / H R - F)	HEAT# EX PERF INDEX (-)	TERM TEMP DIFF (TTD) (F)	DRAIN COOL DIFF (DCA) (F)	FW OR TUBE PRESS DROP (PSIA)	UPD INT/ (RELAXN) DEMAND REFERENCE (-)
1	19	STD. FW. HEATER	5.33E+06	0.00E+00	0.96	2.00	N.A.	0.0	1(0.75) 46
2	20	FWHT. BACK-DRAIN	4.71E+06	1.18E+06	0.97	2.00	10.0	0.0	1(0.75) 10
3	21	FWHT. BACK-DRAIN	3.15E+06	1.02E+06	0.99	2.00	10.0	0.0	1(0.75) 9
4	22	FWHT. BACK-DRAIN	1.56E+06	0.00E+00	0.99	2.00	10.0	0.0	1(0.75) 8
5	23	CONTACT HEATER	N.A.	N.A.	0.74	0.00	N.A.	-0.1	1(0.75) 7
6	24	FW. W/DESUP+COOL	9.81E+05	1.97E+06	0.96	-2.00	10.0	0.0	1(0.75) 6
7	25	FW. W/DESUP+COOL	9.80E+05	1.97E+06	0.96	-2.00	10.0	0.0	1(0.75)166
8	26	FW. W/DESUP+COOL	2.71E+06	1.88E+06	0.98	-1.00	10.0	0.0	1(0.75)126
9	27	FW. W/DESUP+COOL	2.71E+06	1.89E+06	0.98	-1.00	10.0	0.0	1(0.75)167
10	28	FW. W/DESUP+COOL	1.98E+06	0.00E+00	0.99	-2.00	10.0	0.0	1(0.75) 3
11	29	FW. W/DESUP+COOL	1.98E+06	0.00E+00	0.99	-2.00	10.0	0.0	1(0.75)168
12	219	STD. FW. HEATER	2.41E+06	0.00E+00	0.96	2.00	N.A.	0.0	1(0.75) 11
13	319	STD. FW. HEATER	5.38E+06	0.00E+00	0.96	2.00	N.A.	0.0	1(0.75) 47
A	16	STD. CONDENSER	0.00E+00	1.19E+07	1.13	-1.92	N.A.	0.0	N.A.
B	17	STD. CONDENSER	0.00E+00	0.00E+00	1.17	-4.11	N.A.	0.0	N.A.
C	18	STD. CONDENSER	1.28E+08	3.32E+06	0.93	5.02	N.A.	0.0	N.A.

* HEAT TRANSFER/DEG IS SIMILAR TO UA. SEE VOL 1 OUTPUT DESCRIPTION.
\# PERFORMANCE INDEX IS SIMILAR TO EFFECTIVENESS. SEE VOL 1 OUTPUT DESCRIPTION.

IP7019310

** SAVE CASE **

DETAILED FEEDWATER HEATER PERFORMANCE OUTPUT - TABLE B

HTR NO.	COMP NO.	COMPONENT DESCRIPTION	HEAT XFER TO FW OR TUBE CND (BTU/HR)	ENTHALPY RISE FW.OR CND T (BTU/LBM)	ENTHALPY DROP EXT STEAM (BTU/LBM)	MASS FLOWS TO HEATER SHELL (LBM/HR)	MASS FLOWS RATE HEATER DRAIN IN (LBM/HR)	MASS FLOWS RATE THRU TUBES (LBM/HR)
1	19	STD. FW. HEATER	6.98E+07	39.7	972.3	71799.	0.	1758443.
2	20	FWHT. BACK-DRAIN	2.05E+08	38.9	1023.5	182445.	472538.	5274273.
3	21	FWHT. BACK-DRAIN	3.57E+08	67.6	1068.0	324513.	148025.	5274273.
4	22	FWHT. BACK-DRAIN	1.54E+08	29.3	1042.7	148025.	0.	5274273.
5	23	CONTACT HEATER	2.79E+08	52.9	1016.7	249561.	1567562.	5274273.
6	24	FW. W/DESUP+COOL	1.89E+08	53.0	1083.7	142383.	641201.	3570698.
7	25	FW. W/DESUP+COOL	1.89E+08	52.9	1083.7	142078.	641901.	3570698.
8	26	FW. W/DESUP+COOL	3.31E+08	92.8	915.9	328925.	312276.	3570698.
9	27	FW. W/DESUP+COOL	3.32E+08	93.1	916.0	330051.	311850.	3570698.
10	28	FW. W/DESUP+COOL	2.76E+08	77.2	882.3	312276.	0.	3570698.
11	29	FW. W/DESUP+COOL	2.75E+08	77.0	882.1	311850.	0.	3570698.
12	219	STD. FW. HEATER	7.33E+07	41.7	1005.5	72884.	0.	1757915.
13	319	STD. FW. HEATER	7.18E+07	40.8	974.5	73658.	0.	1757915.
A	16	STD. CONDENSER	1.51E+09	15.8	976.0	1391818.	1000097.	95771455.
B	17	STD. CONDENSER	1.34E+09	28.1	967.3	1389060.	0.	47878545.
C	18	STD. CONDENSER	1.41E+09	14.7	962.1	1398114.	3926158.	95771455.

IP7019311

** SAVE CASE **

DETAILED HEAT EXCHANGER PERFORMANCE OUTPUT

COMPONENT NUMBER	COMPONENT DESCRIPTION	HEAT EXCH SHELL LOSSES (BTU/HR)	HEAT TO TUBE SIDE FLUID (BTU/HR)	HEAT EXCH PERF INDEX# (-)	PRESSURE DROP TUBE (P S I)	PRESSURE DROP SHELL (P S I)
15	FOSSIL REHEATER	0.0000	1.2119E+09	N.A.	42.269	N.A.
30	GEN. HT. EXCH.	0.0000	8.9491E+06	0.9288	0.000	280.682
31	EXT. DRAIN COOL.	0.0000	3.7748E+07	0.8649	0.000	0.000
32	SPEC. HT. EXCH.	0.0000	0.0000E+00	N.A.	0.000	N.A.
33	SPEC. HT. EXCH.	0.0000	0.0000E+00	N.A.	0.000	N.A.

PERFORMANCE INDEX IS SIMILAR TO EFFECTIVENESS. SEE VOL 1 OUTPUT DESCRIPTION.

IP7019312

** SAVE CASE **

DETAILED SOURCE, SINK, AND VALVE PERFORMANCE OUTPUT

COMP NO.	COMPONENT DESCRIPTION	FLOW (LBM/HR)	PRESSURE (PSIA)	TEMP/ QUALITY (F/-)	PRESS. DROP (PSI)	PRESS. DROP FRAC. (-)	POSITION (-)
39	THROTTLE VALVE	7134261.	N.A.	N.A.	66.23	0.02746	OPEN
59	INPUT COMPONENT	7134261.	2412.2	1000.0	N.A.	N.A.	N.A.
60	INFINITE SOURCE	143650000.	50.0	72.3	N.A.	N.A.	N.A.
63	INFINITE SINK	143650000.	50.0	109.6	N.A.	N.A.	N.A.
64	OUTPUT COMPONENT	7141395.	2748.0	556.9	N.A.	N.A.	N.A.
176	INFINITE SOURCE	7134.	15.0	60.0	N.A.	N.A.	N.A.
400	INFINITE SINK	0.	2830.7	355.7	N.A.	N.A.	N.A.
416	INFINITE SINK	0.	135.7	350.7	N.A.	N.A.	N.A.
417	INFINITE SINK	0.	135.7	350.7	N.A.	N.A.	N.A.

DETAILED THROTTLE VALVE PERFORMANCE OUTPUT

THROTTLE FLOW RATIO

COMPONENT NUMBER	EQUIVALENT (-)	ACTUAL (-)	FIRST ADMISSION (-)
39	1.033955	1.033951	1.000000

IP7019313

** SAVE CASE **

DETAILED PUMP/COMPRESSOR PERFORMANCE OUTPUT

COMP NO.	COMPONENT DESCRIPTION	PUMP/COMP EFFICIENCY (-)	LINKAGE/ DRIVER EFFIC (-)	PRESSURE RISE (PSI)	ENTH RISE (BTU/LBM)	DRIVER POWER (KW)	GLAND/SEAL LOSSES (BTU/HR)
34	STD. ELE. PUMP	0.7719	1.0000 0.9500	162.31	0.70	7.6568E+02	0.0000
35	STD. ELE. PUMP	0.7719	1.0000 0.9500	162.31	0.70	7.6568E+02	0.0000
37	STM. DRIVEN PUMP	0.8000	0.9800 0.8618	2531.60	10.48	1.1188E+04	0.0000
38	STM. DRIVEN PUMP	0.8000	0.9800 0.7595	2533.70	10.49	1.1198E+04	0.0000
42	STD. ELE. PUMP	1.0000	1.0000 0.9500	433.35	1.30	1.0652E+03	0.0000
43	STD. ELE. PUMP	1.0000	1.0000 0.9500	433.35	1.30	1.0652E+03	0.0000

IP7019314

** SAVE CASE **

PERFORMANCE SUMMARY OF GENERATORS

TURBINE CYCLE GENERATOR NUMBER

	1	2	3	4	5	TOTALS
GR. WHEEL POW,BTU/HR	3.417E+09					3.417E+09
AUX. TURB SHAFT LOAD,BTU/HR	0.000E+00					0.000E+00
NET TURB WHEEL POW (GEN W/O LOSSES) BTU/HR	3.417E+09					3.417E+09
GEN. POWER W/O LOSSES, MWE	1001.332					1001.332
GEAR BOX LOSSES, MWE	0.000					0.000
GEAR BOX OUTPUT POWER, MWE	N.A.					N.A.
GEN. MECHANICAL LOSSES, MWE	4.528					4.528
GEN. ELECTRICAL LOSSES, MWE	10.084					10.084
GEN. TOTAL LOSSES, MWE	14.612					14.612
GEN. + GEAR BOX LOSSES, MWE	14.612					14.612
GROSS GENERATOR POWER, MWE	986.720					986.720

IP7019315

** SAVE CASE **

FIRST LAW OF THERMODYNAMICS PERFORMANCE - ENVELOPE 1

TERM

	HEAT SUPPLIED (ALL UNITS ARE BTU/HR) -		
	MAKEUP HEATS BY FLOW ## INTO THE ENVELOPE		
1	AT SOURCE/SINK COMPONENT, USER ID 60	-1.51451E+11	
2	AT SOURCE/SINK COMPONENT, USER ID 176	-7.61009E+06	
3	AT SOURCE/SINK COMPONENT, USER ID 59	2.61392E+09	
	LETDOWN HEATS BY FLOW ## FROM THE ENVELOPE		
4	AT SOURCE/SINK COMPONENT, USER ID 63	-1.46107E+11	
5	AT SOURCE/SINK COMPONENT, USER ID 417	0.00000E+00	
6	AT SOURCE/SINK COMPONENT, USER ID 416	0.00000E+00	
7	AT SOURCE/SINK COMPONENT, USER ID 400	0.00000E+00	
8	AT SOURCE/SINK COMPONENT, USER ID 64	-3.85579E+09	
9	NET HEAT TO ENVELOPE BY FLOW		1.11837E+09
10	CONDENSER COOLING LOAD CREDIT (HEAT IN)	4.26691E+09	
11	FURNACE UNACCOUNTED HEAT LOSSES	0.00000E+00	
12	BOILER REHEAT (TYPE 25 COMPONENTS)	1.21195E+09	
13	UNSPECIFIED HEAT EXCHANGERS (HEAT IN)	0.00000E+00	
14	COMPONENT VESSEL LOSSES	0.00000E+00	
15	PIPE HEAT AND ELEVATION LOSSES	-1.07691E+09	
16	PUMP/COMP/FAN INEFFICIENCY LOSSES	2.15242E+06	
17	PUMP GLANDS AND SEALS LOSSES	0.00000E+00	
18	GENERATOR HYD AND OIL COOLER (HEAT IN)	0.00000E+00	
19	HEAT IN AS ELECTRIC PUMP/COMP/FAN POWER	1.24945E+07	
20	NET POWER SUPPLIED		7.68448E+09
	POWER OUT (ALL UNITS ARE MWE) -		
21	NET TURBINE WHEEL POWER TO GENERATORS	1.00133E+03	
22	APPORTIONED GENERATOR MECHANICAL LOSSES	4.52800E+00	
23	APPORTIONED GENERATOR ELECTRICAL LOSSES	1.00836E+01	
24	GROSS GENERATOR POWER		9.86720E+02
25	ELECTRIC POWER USED FOR PUMP/COMP/FAN	3.66179E+00	
26	APP HOUSE LOAD EXC ELEC PUMP/COMP/FAN	0.00000E+00	
27	NET GENERATOR POWER		9.83059E+02

ENVELOPE PERFORMANCE, EFFICIENCY, - 4.36508E-01

ENVELOPE PERFORMANCE, HEAT RATE, BTU/KW-HR 7.81691E+03

BY DEFAULT, EFFICIENCY IS DEFINED AS (NET GENERATOR POWER / NET POWER SUPPLIED)
BY DEFAULT, HEAT RATE IS DEFINED AS (NET POWER SUPPLIED / NET GENERATOR POWER)

HEAT BY FLOW IS A COMPOSITE TERM, COMPUTED FROM THE EXPRESSION:
FLOW RATE X (ENTHALPY - REFERENCE ENTHALPY + LOWER HEATING VALUE)

IP7019316

** SAVE CASE **

FIRST LAW OF THERMODYNAMICS PERFORMANCE - SYSTEM

HEAT SUPPLIED (ALL UNITS ARE BTU/HR) -		
BOILER HEAT TO WORKING FLUID	$ 6.46970E+09	
1ST BOILER REHEAT (IN, TYPE 25 COMPONENT)	1.21195E+09	
2ND BOILER REHEAT (IN, TYPE 25 COMPONENT)	0.00000E+00	
UNSPECIFIED HEAT EXCHANGERS (HEAT IN)	0.00000E+00	
GROSS HEAT SUPPLIED	$	7.68165E+09
MAKEUP HEAT (BY FLOW ## IN)	-1.51458E+11	
LETDOWN HEAT (BY FLOW ## OUT)	-1.46107E+11	
CONDENSER COOLING LOAD CREDIT (HEAT IN)	4.26691E+09	
COMPONENT VESSEL LOSSES	0.00000E+00	
PIPE HEAT AND ELEVATION LOSSES	-1.07691E+09	
PUMP/COMP/FAN INEFFICIENCY LOSSES	2.15242E+06	
PUMP GLANDS AND SEALS LOSSES	0.00000E+00	
GENERATOR HYD AND OIL COOLER (HEAT IN)	0.00000E+00	
NET HEAT SUPPLIED		7.67198E+09
HEAT IN AS ELECTRIC PUMP/COMP/FAN POWER	1.24945E+07	
NET POWER SUPPLIED		7.68448E+09

POWER OUT (ALL UNITS ARE MWE) -		
NET TURBINE WHEEL POWER TO GENERATORS	1001.332	
GENERATOR MECHANICAL LOSSES	4.528	
GENERATOR ELECTRICAL LOSSES	10.084	
GROSS GENERATOR POWER		986.720
ELECTRIC POWER USED FOR PUMP/COMP/FAN	3.662	
HOUSE LOAD POWER, EXCLUDING ELEC PUMP/COMP/FAN	0.000	
(EXCEPTION: INCLUDES COOLING TOWER FAN POWER)		
NET GENERATOR POWER		983.059

SYSTEM PERFORMANCE	THERMAL EFF. (-)	HEAT RATE (BTU/KW-HR)
GROSS ACTUAL TURBINE CYCLE		
(GROSS HEAT SUPPLIED / GROSS GENERATOR POWER)	0.43830	$ 7785.
NET ACTUAL TURBINE CYCLE		
(MOD NET POWER SUPPLIED / NET GENERATOR POWER)	0.50749	6724.
TURBINE CYCLE STEAM RATE, LBM/KW-HR		7.2303

NOTE: MOD NET POWER SUPPLIED = NET POWER SUPPLIED + COMPONENT VESSEL LOSSES + PIPE HEAT AND ELEVATION LOSSES + PUMP INEFFICIENCY LOSSES + PUMP GLANDS AND SEALS LOSSES

IP7019317

** SAVE CASE **

CYCLE SUMMARY

GENERATION (MW)		ENERGY SUMMARY (MBTU/HR) *	
Generator 1	986.720	Input Component	2613.918
		Output Component	-3855.785
TOTAL CYCLE	986.720	Steam Reheat	1211.947
		NET SUPPLIED CYCLE	7681.650

HEAT RATE (BTU/KW-HR) **		MISCELLANEOUS	
Cycle	7785	Backpressure (in.hga)	
Steam Turbine	7785	Cond 1	2.24
		Cond 2	1.66
		Cond 3	2.99

* All terms except "Fuel Input (lhv)" calcd using w*(h-href+hvall). The term, Fuel Input (lhv), is w*hvall, where hvall is lower heating value.

** Heat rates are defined as:

Cycle = {Energy In (Input Component) - Energy Out (Output Component) + Steam Reheat Energy} / Total Cycle Generation (After Gen Losses)

Steam Turbine = {Energy In (Input Component) - Energy Out (Output Component) + Steam Reheat Energy} / Steam Turbine Generation (After Gen Losses)

IP7019318

** SAVE CASE **

SECOND LAW OF THERMODYNAMICS PERFORMANCE - SYSTEM
(TTDEAD = 5.00000E+01 DEG F)

SUMMARY FOR CYCLE SUBSYSTEMS

SUBSYSTEM	POTENTIAL FOR POWER MAXIMUM (BTU/HR)	POTENTIAL FOR POWER RELATIVE (-)	IRREVERSIBILITY ACTUAL (BTU/HR)	IRREVERSIBILITY RELATIVE (-)	EFFECT-IVENESS (-)
CLASS 0 - TURBINES	3.768533E+09	1.2395	3.518466E+08	-0.9673	0.9066
CLASS 1 - FW HEATERS	1.447016E+08	0.0476	1.447016E+08	-0.3978	0.9040
CLASS 2 - HEAT EXCHANGERS	-8.296706E+08	-0.2729	-8.296706E+08	2.2809	0.5873
CLASS 3 - VALVES ONLY	9.922206E+06	0.0033	9.922206E+06	-0.0273	
CLASS 4 - PUMPS	1.650097E+07	0.0054	2.899551E+07	-0.0797	
CLASS 5 - MIXERS	-3.548283E+07	-0.0117	-3.548283E+07	0.0975	
CLASS 6 - SPLITTERS	3.590778E+06	0.0012	3.590778E+06	-0.0099	
CLASS 7 - MISC COMPONENTS	0.000000E+00	0.0000	0.000000E+00	0.0000	
STREAMS	-3.765456E+07	-0.0124	-3.765456E+07	0.1035	
TOTALS	3.040440E+09	1.0000	-3.637514E+08	1.0000	

CYCLE PERFORMANCE

NET AVAILABILITY INFLUX, BTU/HR	3.172268E+09	
CONSTRUCTIVE ADDITIONS, BTU/HR	-1.318279E+08	
MAXIMUM POTENTIAL POWER, BTU/HR		3.040440E+09
TOTAL IRREVERSIBILITY, BTU/HR	(-3.637514E+08)	
NET CYCLE POWER, BTU/HR		3.404192E+09
FIRST LAW RESULT (NET TURBINE WHEEL POWER LESS ELECTRIC POWER USED FOR PUMP/COMP/FAN), BTU/HR		3.404192E+09
CYCLE EFFECTIVENESS		1.1196

IP7019319

** SAVE CASE **

SPECIAL OUTPUT TABLE OF SPECIFIED VARIABLES

INDEX	DESCRIPTION	VARIABLE(ID)		VALUE	UNITS
1	GROSS GENERATOR POWER	BKGROS(	0)	986.720	MW
2	HP SECTION EFFICIENCY	OPVB	(168)	91.63	Not-Specd
3	IP SECTION EFFICIENCY	OPVB	(190)	92.11	Not-Specd
4	THROTTLE FLOW	WW	(59)	7134261.	LBM/HR
5	1ST STAGE PRESSURE inlet	PP	(118)	2346.0	PSIA
6	new 8TH STAGE SHELL PRESSURE	PP	(4)	630.9	PSIA
7	IP INLET PRESSURE	PP	(67)	588.6	PSIA
8	14TH STAGE SHELL PRESSURE	PP	(777)	138.51	PSIA
9	HP TURB PR RATIO	OPVB	(170)	2.71	Not-Specd
10	IP TURB PR RATIO	OPVB	(171)	4.25	Not-Specd
132	REHEAT PRESSURE DROP	OPVB	(173)	670.0000	Not-Specd
135	BOILER BLOWDOWN FLOW	OPVB	(20)	7134.	NO-UNITS
136	CYCLE LOSSES	OPVB	(24)	0.	Not-Specd
137	CYCLE MAKEUP FLOW	WW	(214)	7134.	LBM/HR
138	FLUE GAS REHEAT FLOW	WW	(194)	0.	LBM/HR
139	AIR PREHEAT FLOW	WW	(192)	0.	LBM/HR
140	BOILER FEED FLOW	WW	(114)	7141395.	LBM/HR
141	SH ATTEMP FLOW	WW	(609)	0.	LBM/HR
142	RH ATTEMP FLOW	WW	(610)	0.	LBM/HR
150	NET TURBINE CYCLE HEAT RATE	OPVB	(114)	7811.62	Not-Specd
198	H2 PRESSURE	PPGNH2(	1)	63.00	PSIA
199	POWER FACTOR	POWFAC(	1)	0.90	NO-UNITS

IP7019320

** SAVE CASE **

PERFORMANCE TEST ANALYSIS RESULTS (SPECIAL OPTION 6)

CASE	GEN. POWER/ INCREMENT (MW)		HEAT RATE/ INCREMENT (BTU/KW-HR)		CASE TITLE
TEST	949.598		7884.		U2 Test Data Reduction
BENCHMK	973.186		7715.		U2 Design HB FROM ALSTOM
		23.850		129.	
STAND'N	997.036		7844.		U2 Corr Test ALSTOM Test
		-10.316		-32.	
UPGR 1	986.720		7812.		U2 FW HTRS & RH Press Drop to DESIGN V

IP7019321

** SAVE CASE **

GENERATION, HEAT RATE, AND COST
BASED ON STANDARD BOUNDARY CONDITIONS

UPGRADE CASE	ITEM	BENEFIT FOR ITEM UPGRADE LOAD (MW)	HEAT RATE (BTU/KW-HR)	COST ($/YR)
1	U2 FW HTRS & RH Press Drop to DESIGN Values	-10.32	32.	375570.
	RECONCILIATION			
	BENEFIT SUM (FOR ALL UPGRADE CASES ABOVE)	-10.32	32.	375570.
	TOTAL BENEFIT POSSIBLE (STANDN TO BMRK)	-23.85	129.	1511116.

IP7019322