LP Turbine LSB Replacement Cash Flow

Fixed Price Portion of Contract				
Milestone	Date	Payment	Total 2009-10	Total 2010-11
Award of Contract	12/1/2009	$1,499,100	$1,499,100	
U2 LSBs shipment (FOB Japan)	6/1/2010	$3,248,050		3248050
U2 LSBs installed	9/1/2009	$999,400		999400
U1 LSBs shipment (FOB Japan)	10/23/2010	$3,248,050		$3,248,050
U1 LSBs installed	12/1/2010	$999,400		$999,400
Sub-Total Fixed Price Portion		$9,994,900	$1,499,100	$8,495,800
Estimated T&M Contract Expenses				
Unit 2 additional stuck pin removal (5%)	12/1/2010	$39,500		$39,500
Unit 2 max bonus for early installation	12/1/2010	$250,000		$250,000
Unit 1 additional stuck pin removal (5%)	4/25/2011	$39,500		$39,500
Unit 1 max bonus for early installation	4/25/2011	$250,000		$250,000
Sub-Total Estimated T&M Contract Expenses		$579,000	$0	$579,000
Total Fixed Price Contract		$10,573,900	$1,499,100	$9,074,800
Estimated Other Project Expenses				
Unit 2 Sales Tax	12/6/2010	$208,680		$208,680
Unit 1 Sales Tax	4/25/2011	$206,340		$206,340
Unit 2 IPSC Labor	12/1/2010	$15,000		$15,000
Unit 1 IPSC Labor	5/1/2011	$15,000		$15,000
Training	3/1/2010	$25,000	$25,000	
Outage office trailer	6/1/2010	$20,000	$20,000	
Rotor bore engineering evaluation	2/1/2010	$20,000	$20,000	
U2 Engineering labor (inc QA travel)	5/1/2010	$20,000	$20,000	
U1 Engineering labor (inc QA travel)	12/15/2010	$20,000		$20,000
Sub-Total Other Project Expenses		$559,020	$85,000	$474,020
Projected Total		$11,132,920	$1,584,100	$9,548,820

August 12, 2008

IP70179 97

IGS 09-03 Expenditure Tracking -LP Turbine LSB Replacement

Contract Costs (pre-tax)	
15% on contract signing	1,499,100
U2 5 rows shipped	2,715,104
U2 6th row shipped	543,021
U2 installation complete	1,002,500
Total	5,759,725
Project Extra Costs (pre-tax)	
EWA-2 stuck pin removal tooling	17,870
EPO-990 oversized pin	2,800
EPO-990 oversized reamer	1,850
Early completion bonus	250,625
EWA-3 balance guy travel	7,600
Total	280,745

JOB NO.: IGS-09-03 W.O. #09-68785-0

TITLE: Replace LP Turbine Last Stage Buckets

DESCRIPTION: Replace LP turbine last stage buckets on both Units during the 2010 and 2011 major outages. LP turbine last stage bucket tip leading edge erosion has progressed to the point where cracking and tip failure are probable during the next LP turbine outage operating interval (10 years). GE recommended replacing these buckets following their 2007 and 2008 outage inspections. Justification is based on the OEM recommendation and the avoided costs of extended forced outages to repair damage resulting from an LP turbine last stage bucket tip failure.

JUSTIFICATION: ECONOMIC

RATE OF RETURN: 21 percent
PAYBACK PERIOD: 4.5 years
BENEFIT/COST RATIO: 1.74
ECONOMIC LIFE: 10 years
PV SAVINGS: $21,815,000
SALVAGE VALUE:

ADDITIONAL DETAIL: Last stage bucket leading edge erosion is deep enough to propagate surface cracks which will cause bucket tip failure. There have been several failures of these buckets due to material properties and resonance node characteristics which stimulate crack growth in the tip area. GE issued TIL 1512-2 in 2005 to address customer concerns with these buckets.

COST ESTIMATE:

	2009-2010	2010-2011	Total
Engineering Labor	$20,000	$20,000	$40,000
IPSC Labor	$15,000	$15,000	$30,000
Contract	$6,000,000	$6,000,000	$12,000,000
Job Total	$6,035,000	$6,035,000	$12,070,000

ALTERNATIVES: Replace entire LP turbines steam paths during the next scheduled LP turbine overhauls. Purchase spare buckets and operate further into the LP turbine outage interval until steam path

IP7017999

replacement or spare bucket installation can be scheduled.

EFFECT OF DEFERRAL: High risk of last stage bucket tip failure with resulting extended forced outage and repair cost.

IP7018000

Project Title: LP turbine LSB replacement WO # 09-68785-0 Date: 8/7/2008

Project Cost ($)	12,551,000	Total cost of project including material and labor in current dollars
Salvage Value of Old Equipment ($)		Salvage value of existing equipment that will be removed.
Initial Savings ($)		Savings that will be obtained at project installation.
Total Coal Savings (Ton/yr)		List the tons of coal that will be saved annually as a result of the project.
Total Fuel Oil Savings (Gal./yr)		List the gallons of fuel oil that will be saved annually as a result of the project.
Power Savings (MWhr)		List the annual auxillary power savings that will result from the project.
Other Savings ($)		List the annual savings that will result such as maintenance savings.
Annual Costs With the new Equipment ($)	0	List the annual costs associated with the new equipment such as maintenance costs.
Future Salvage Value New Equipment($)	0	List the expected salvage value of the new equipment at the end of the project life.
Project Life (Years)	10	

Note: For non-annual payments or savings, use sheet 2.

Total Coal Cost ($/Ton)	38.77
Total Fuel Oil Cost ($/Gal)	3.5
Replacement Power Cost ($/MWhr)	50
Cost of Money (%)	8
O&M Escalation (%)	3

Present Value of Project	$9,339,278
Benefit/Cost Ratio	1.74
Payback Period	4.5
Rate of Return	21%

Notes and Assumptions:

Costs based on MD&A budget estimate 70458-B / 70459-B 2/6/8.
Justification based on avoiding the cost of a two forced outage at year five due to bucket tip failures
21 days forced outage to repair 3 damaged buckets in one LP section @ $50/mwh rep energy cost - $16/mwh
avoided fuel cost = $15.752 x 2 = $31.504 m
3 buckets fab and install $330,000 x 2 = $660,000
total avoided cost = $32,164 m

Prepared by: D Spence 080608

IP7018001

Note: Enter unequal payments as future dollars. Account for inflation etc.
Enter Unequal Savings and Costs as positive numbers.

	Annual Savings	Unequal Savings	Unequal Costs	Rate of Return Series	Period Present Values
Project Cost	-12,551,000			-12,551,000	-12,551,000
1	0			0	0
2	0			0	0
3	0			0	0
4	0			0	0
5	0	32,164,000		32,164,000	21,890,278
6	0			0	0
7	0			0	0
8	0			0	0
9	0			0	0
10	0			0	0

		Project Cost	12,551,000
		Annual Savings	0
		Escalation (%)	3
		Cost of Money (%)	8
		Periods (Years)	10
		ln	0.05
Rate of Return	21%		
Net Present Value	9,339,278		
Payback Period	4.46		
Annuity PV	21,890,278	NPV w/o Inflation	6,337,053
Annual Savings from Annuity	2,814,877	IRR Guess	0.1

Cost of Heat Rate (%)

$1.66	Fuel Cost ($/mmBtu)
900	Net Capacity)
90.00%	Net Capacity Factor
9400	Net Heat Rate (Btu/kwh)
0.36%	Percent Heat Rate Change
8760	Period Hours
$400,805	Annual Savings/Cost ($/yr)
$33,400	Monthly Savings/Cost ($/m)
$1,098	Daily Savings/Cost ($/d)
$46	Hourly Savings/Cost ($/h)

Cost of Heat Rate Change - $/Btu/kwh

$1.66	Fuel Cost ($/mmBtu)
900	Net Capacity)
90.00%	Net Capacity Factor
34.00	Btu/kwh
8760	Period Hours
$400,476	Annual Savings/Cost ($
$33,373	Monthly Savings/Cost (
$1,097	Daily Savings/Cost ($/(
$46	Hourly Savings/Cost ($

LSB replacement econ calcs.xls 1/10/2011

$/yr)
($/m)
d)
$/h)

Economic evaluation criteria used for 2009 budget justifications

Evaluation Criteria		
Outage year	2010	
Escalation (%)	3.00%	
Cost of Money (%)	8.00%	
Evaluation Period (yr)	10	
NPHR (Btu/kwh)	9500	
Net Capacity Factor (%)	90%	
Replacement Energy ($/MWh)	$50.00	
Fuel Cost ($/ton)	$38.77	38.77
Fuel Cost ($/mmBtu)	$1.66	1.66
CO2 tax ($/ton)	$0.00	
FY 06-07 Production Values		
Total fuel cost ($1,000's)	231,047.0	
Net station generation (gwh)	14,686.0	
Total coal burned (ktons)	5,959.9	
Coal HHV (Btu/lb)	11,686	
NPHR (Btu/kwh)	9,491	
Net Capacity Factor (%)	93.1	
Fuel Cost ($/Mwh)	15.73	

Time-line for LP Turbine Last Stage Bucket Replacement Capital Project IGS09-03

5/07/07	GE recommendation to replace U1 LP turbine last stage buckets from U1, Spring 2007 outage inspections.
4/07/08	U2 LSB inspection by GE.
4/08/08	U2 LSB inspection by MD&A
5/27/08	MD&A U2 LSB inspection report and recommendation published.
5/31/08	GE U2 LSB erosion statistical study report and recommendation published.
6/16/08	Recommendation to replace LP turbine LSB's to IPSC management.
7/31/08	WO 09-68785-0 and justification submitted for LSB replacement on: Unit 2 - Spring 2010 $6.035 M (BY 2009-10) Unit 1 - Spring 2011 $6.035 M (BY 2010-11)
8/06/08	Recommendation to replace LP turbine LSB's to LADWP.
10/08	Outage schedule changed - U2 moved to Fall 2010 (BY 2010-11)
8/03/09	Request for quotes sent out.
9/16/09	Bids received.
11/02/09	Letter of intent to award contract to Toshiba International Corp. sent.
1/15/10	U2 outage moved up 2 weeks to Oct. 16, 2010.
2/03/10	Contract signed.
2/08/10	Payment on execution of contract $1.499M (15% of total contract price for each unit).
9/02/10	Payment on shipping of U2 replacement parts (5 rows) $2.879M.
9/08/10	5 rows of U2 LSB's delivered.

TIC 2011 IPSC Unit #1 LPA, LPB & LPC Rotor LSB Replacement Project Base Execution Schedule

Revision 0 Dated 1-1-11

ID	Task Name	Duration	Start	Finish	Rotor Lift Activity	Responsibility
1	**TIC 2011 IPSC Unit #1 LPA, LPB & LPC Rotor LSB Replacement project**	91.63 days	Tue 1/11/11 8:00 AM	Tue 4/12/11 11:00 PM		
2	**LP Rotor LSB Replacement Project Planning, Mobilization & Support**	16.33 days	Tue 1/11/11 8:00 AM	Mon 3/21/11 8:00 AM		
3	Site visit to review Lessons Learned and Present Project Required documents	32 hrs	Tue 1/11/11 8:00 AM	Fri 1/14/11 5:00 PM		TIC
4	Off Site Planning period	240 hrs	Mon 1/17/11 8:00 AM	Fri 2/25/11 5:00 PM		TIC
13	Receive & Off Load Trucks #1 and #2	8 hrs	Tue 3/1/11 8:00 AM	Tue 3/1/11 5:00 PM		TIC-ReGENco, Skeleton crew-Clier
7	Walk down platforms needed for LP Rotor LSB Replacement Project	8 hrs	Tue 3/1/11 1:00 PM	Wed 3/2/11 12:00 PM		TIC-ReGENco, Skeleton crew-Clier
5	Stage Office-Break Trailer, Set-up Same	6 hrs	Wed 3/2/11 8:00 AM	Wed 3/2/11 3:00 PM		TIC-ReGENco, Skeleton crew-Clier
8	Check skids to ensure level	6 hrs	Wed 3/2/11 8:00 AM	Wed 3/2/11 3:00 PM		TIC-ReGENco, Skeleton crew-Clier
12	Stage Equipment for Laydown & Electrical hook-ups	12 hrs	Wed 3/2/11 8:00 AM	Thu 3/3/11 12:00 PM		TIC-ReGENco, Skeleton crew-Clier
6	Connect Temp Electrical, Office-Break Trailer & ReGENco Equipment	16 hrs	Wed 3/2/11 3:00 PM	Fri 3/4/11 3:00 PM		Client
14	Set-up LS Balance Machine on Turbine Deck	12 hrs	Wed 3/2/11 3:00 PM	Fri 3/4/11 10:00 AM		TIC-ReGENco-Client
15	Erect platforms needed for LP Rotor LSB Replacement & NDE/Bore Inspections	48 hrs	Thu 3/3/11 8:00 AM	Thu 3/10/11 5:00 PM		Client
9	Final Organize On Site Admin, Execution and Support Processes	40 hrs	Mon 3/7/11 8:00 AM	Fri 3/11/11 5:00 PM		TIC
16	Mount Olympus TIC Water delivery	0 hrs	Fri 3/11/11 10:00 AM	Fri 3/11/11 10:00 AM		Client Off Load
10	TIC Permanently on Site	0 hrs	Mon 3/14/11 8:00 AM	Mon 3/14/11 8:00 AM		TIC
11	Kroll LPA, LPB & LPC Rotor LSB pins	32 hrs	Mon 3/14/11 8:00 AM	Thu 3/17/11 5:00 PM		TIC
17	ReGENco Permanently on Site	0 hrs	Wed 3/16/11 8:00 AM	Wed 3/16/11 8:00 AM		TIC-ReGENco
18	Structural Integrity Permanently on Site	0 hrs	Sun 3/20/11 10:00 AM	Sun 3/20/11 10:00 AM		TIC-Structural Integrity
19	TSB TA Permanently on Site	0 hrs	Mon 3/21/11 8:00 AM	Mon 3/21/11 8:00 AM		TIC-TSB
57	**LPA Rotor LSB Replacement**	16.13 days	Thu 3/17/11 8:00 PM	Sat 4/2/11 11:00 PM		
60	Perform Runout Inspections (Client to Perform in the Bearings)	0 hrs	Thu 3/17/11 8:00 PM	Thu 3/17/11 8:00 PM		TIC-Client
61	Set LPA Rotor into turning device #1	3 hrs	Thu 3/17/11 8:00 PM	Thu 3/17/11 11:00 PM	Yes	TIC-ReGENco/Client
58	Remove TE and GE LSB's	36 hrs	Thu 3/17/11 11:00 PM	Sat 3/19/11 11:00 AM		TIC-ReGENco
62	IPSC Unit #1 LSB Replacement Contract Start Date	0 hrs	Thu 3/17/11 11:00 PM	Thu 3/17/11 11:00 PM		Contract Start Date
59	Client dust blast LPC rotor body, TE & GE LSB Blade root areas	36 hrs	Sat 3/19/11 11:00 AM	Sun 3/20/11 11:00 PM		Client
63	Client perform LPC rotor body, TE & GE LSB Blade Root VT & MT Inspections	14 hrs	Sun 3/20/11 11:00 PM	Mon 3/21/11 1:00 PM		Client
64	Set LPA Rotor into turning device #1	4 hrs	Mon 3/21/11 1:00 PM	Mon 3/21/11 5:00 PM	Yes	TIC-ReGENco/Client
65	Install New TE and GE LSB's	78 hrs	Wed 3/23/11 9:00 PM	Sun 3/27/11 3:00 AM		TIC-ReGENco
66	Ream holes and install pins	72 hrs	Sun 3/27/11 3:00 AM	Wed 3/30/11 3:00 AM		TIC-ReGENco
67	Stake pins and peen covers	72 hrs	Wed 3/30/11 3:00 AM	Sat 4/2/11 3:00 AM		TIC-ReGENco
68	Lift LPA rotor to LS Balance Machine, Set-up same	4 hrs	Sat 4/2/11 3:00 AM	Sat 4/2/11 7:00 AM	Yes	TIC-ReGENco/Client
69	Low Speed Balance LPA Rotor on Turbine Deck	16 hrs	Sat 4/2/11 7:00 AM	Sat 4/2/11 11:00 PM		TIC-ReGENco
70	Release LPA Rotor back to IPSC	0 hrs	Sat 4/2/11 11:00 PM	Sat 4/2/11 11:00 PM	Yes	TIC-ReGENco-Client
71	**LPB Rotor LSB Replacement**	18.38 days	Fri 3/18/11 2:00 PM	Tue 4/5/11 11:00 PM		
74	Perform LPB Rotor Runout Inspections (Client to Perform in the Bearings)	0 hrs	Fri 3/18/11 2:00 PM	Fri 3/18/11 2:00 PM		TIC-Client
75	Set LPB Rotor into turning device #2	4 hrs	Fri 3/18/11 2:00 PM	Fri 3/18/11 6:00 PM	Yes	TIC-ReGENco/Client
72	Remove TE and GE LSB's	36 hrs	Sat 3/19/11 11:00 AM	Sun 3/20/11 11:00 PM		TIC-ReGENco
73	Client dust blast LPC rotor body, TE & GE LSB Blade root areas	36 hrs	Mon 3/21/11 1:00 PM	Wed 3/23/11 1:00 AM		Client
76	Client perform LPC rotor body, TE & GE LSB Blade Root VT & MT Inspections	16 hrs	Wed 3/23/11 1:00 AM	Wed 3/23/11 5:00 PM		Client
77	Set LPB Rotor into turning device #2	4 hrs	Wed 3/23/11 5:00 PM	Wed 3/23/11 9:00 PM	Yes	TIC-ReGENco/Client
78	Install New TE and GE LSB's	72 hrs	Sun 3/27/11 3:00 AM	Wed 3/30/11 3:00 AM		TIC-ReGENco
79	Ream holes and install pins	72 hrs	Wed 3/30/11 3:00 AM	Sat 4/2/11 3:00 AM		TIC-ReGENco
80	Stake pins and peen covers	72 hrs	Sat 4/2/11 3:00 AM	Tue 4/5/11 3:00 AM		TIC-ReGENco
81	Lift LPB rotor to LS Balance Machine, Set-up same	4 hrs	Tue 4/5/11 3:00 AM	Tue 4/5/11 7:00 AM	Yes	TIC-ReGENco/Client
82	Low Speed Balance LPB Rotor on Turbine Deck	16 hrs	Tue 4/5/11 7:00 AM	Tue 4/5/11 11:00 PM		TIC-ReGENco
83	Release LPA Rotor back to IPSC	0 hrs	Tue 4/5/11 11:00 PM	Tue 4/5/11 11:00 PM	Yes	TIC-ReGENco/Client
84	**LPC Rotor LSB Replacement**	20.63 days	Sat 3/19/11 8:00 AM	Fri 4/8/11 11:00 PM		
85	Perform LPB Rotor Runout Inspections (Client to Perform in the Bearings)	0 hrs	Sat 3/19/11 8:00 AM	Sat 3/19/11 8:00 AM		TIC-Client
86	Set LPC Rotor into turning device #3	4 hrs	Sat 3/19/11 8:00 AM	Sat 3/19/11 12:00 PM	Yes	TIC-ReGENco/Client
87	Remove TE and GE LSB's	36 hrs	Sun 3/20/11 11:00 PM	Tue 3/22/11 11:00 AM		TIC-ReGENco
88	Client dust blast LPC rotor body, TE & GE LSB Blade root areas	36 hrs	Wed 3/23/11 5:00 PM	Fri 3/25/11 5:00 AM		Client
89	Client perform LPC rotor body, TE & GE LSB Blade Root VT & MT Inspections	14 hrs	Fri 3/25/11 5:00 AM	Fri 3/25/11 7:00 PM		Client

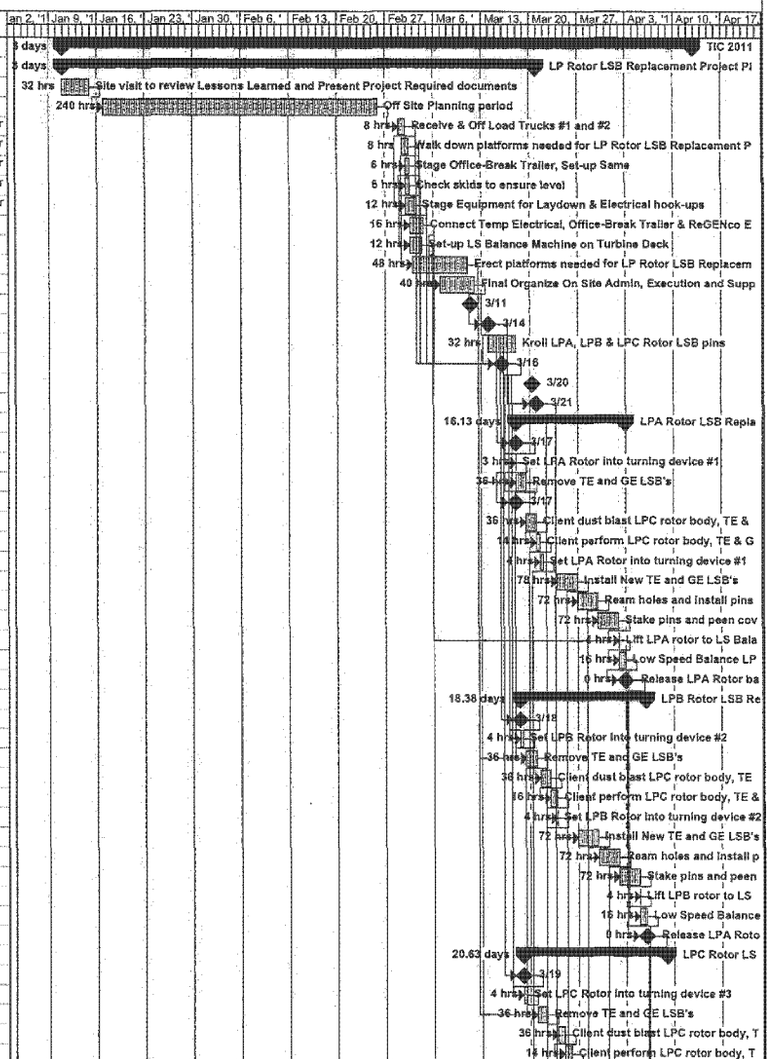

Project: TIC 2011 IPSC Unit #1 Execu
Date: Tue 1/4/11 9:10 PM

Task | Split | Progress | Milestone | Summary

IP7018008

TIC 2011 IPSC Unit #1 LPA, LPB & LPC Rotor LSB Replacement Project Base Execution Schedule

Revision 0 Dated 1-1-11

ID	Task Name	Duration	Start	Finish	Rotor Lift Activity	Responsibility
90	Set LPC Rotor into turning device #3	4 hrs	Fri 3/25/11 7:00 PM	Fri 3/25/11 11:00 PM	Yes	TIC-ReGENco/Client
91	Install New TE and GE LSB's	72 hrs	Wed 3/30/11 3:00 AM	Sat 4/2/11 3:00 AM		TIC-ReGENco
92	Ream holes and install pins	72 hrs	Sat 4/2/11 3:00 AM	Tue 4/5/11 3:00 AM		TIC-ReGENco
93	Stake pins and peen covers	72 hrs	Tue 4/5/11 3:00 AM	Fri 4/8/11 3:00 AM		TIC-ReGENco
94	Lift LPB rotor to LS Balance Machine, Set-up same	4 hrs	Fri 4/8/11 3:00 AM	Fri 4/8/11 7:00 AM	Yes	TIC-ReGENco-Client
95	Low Speed Balance LPC Rotor on Turbine Deck	16 hrs	Fri 4/8/11 7:00 AM	Fri 4/8/11 11:00 PM		TIC-ReGENco
96	Release LPA Rotor back to IPSC, Base Contract Completion Date	0 hrs	Fri 4/8/11 11:00 PM	Fri 4/8/11 11:00 PM	Yes	TIC-ReGENco
97	IPSC Unit #1 LSB Replacement Contract Completion Date	0 hrs	Fri 4/8/11 11:00 PM	Fri 4/8/11 11:00 PM		Contract Complete Date
20	**Rotor Bore/PAUT Inspections**	14.42 days	Sun 3/20/11 10:00 AM	Sun 4/3/11 8:00 PM		
21	**Rotor Bore/PAUT Inspection Mobilization**	11.58 days	Sun 3/20/11 10:00 AM	Fri 4/1/11 12:00 AM		
22	Unload & Set-up LP Rotor Bore/PAUT Equipment	8 hrs	Sun 3/20/11 10:00 AM	Sun 3/20/11 6:00 PM		TIC-Structural Integrity-Client
23	Connect Rotor Bore Equipment Temp Power	16 hrs	Sun 3/20/11 6:00 PM	Mon 3/21/11 10:00 AM		Client
24	Liquid Nitrogen on site (Bore Plug installation)	0 hrs	Fri 4/1/11 12:00 AM	Fri 4/1/11 12:00 AM		Client
25	**LPA Rotor Bore/PAUT Inspection Execution Period**	10.38 days	Mon 3/21/11 5:00 PM	Fri 4/1/11 2:00 AM		
26	Remove Bore Plug	16 hrs	Mon 3/21/11 5:00 PM	Tue 3/22/11 9:00 AM		TIC-Structural Integrity
27	Set-up PAUT Inspection Equipment	6 hrs	Tue 3/22/11 9:00 AM	Tue 3/22/11 3:00 PM		TIC-Structural Integrity
30	Set-up for Honing Rotor Bore	6 hrs	Tue 3/22/11 9:00 AM	Tue 3/22/11 3:00 PM		TIC-Structural Integrity
28	Perform L1, L2, & L3 PAUT Inspections	14 hrs	Tue 3/22/11 3:00 PM	Wed 3/23/11 5:00 AM		TIC-Structural Integrity
29	Preliminary Evaluate L1, L2, & L3 PAUT Inspection Data	4 hrs	Wed 3/23/11 5:00 AM	Wed 3/23/11 9:00 AM		TIC-Structural Integrity
31	Hone Rotor Bore	16 hrs	Wed 3/23/11 5:00 AM	Wed 3/23/11 9:00 PM		TIC-Structural Integrity
32	Perform Rotor Bore Inspection	18 hrs	Wed 3/23/11 9:00 PM	Thu 3/24/11 3:00 PM		TIC-Structural Integrity
33	Purge Rotor Bore & Install Bore Plug	2 hrs	Fri 4/1/11 12:00 AM	Fri 4/1/11 2:00 AM		TIC-Structural Integrity
34	**LPB Rotor Bore/PAUT Inspection Execution Period**	8.79 days	Wed 3/23/11 9:00 AM	Fri 4/1/11 4:00 AM		
36	Set-up PAUT Inspection Equipment	6 hrs	Wed 3/23/11 9:00 AM	Wed 3/23/11 3:00 PM		TIC-Structural Integrity
37	Perform L1, L2, & L3 PAUT Inspections	14 hrs	Wed 3/23/11 3:00 PM	Thu 3/24/11 5:00 AM		TIC-Structural Integrity
35	Remove Bore Plug	16 hrs	Wed 3/23/11 9:00 PM	Thu 3/24/11 1:00 PM		TIC-Structural Integrity
38	Preliminary Evaluate L1, L2, & L3 PAUT Inspection Data	4 hrs	Thu 3/24/11 5:00 AM	Thu 3/24/11 9:00 AM		TIC-Structural Integrity
39	Set-up for Honing Rotor Bore	6 hrs	Thu 3/24/11 1:00 PM	Thu 3/24/11 7:00 PM		TIC-Structural Integrity
40	Hone Rotor Bore	16 hrs	Thu 3/24/11 7:00 PM	Fri 3/25/11 11:00 AM		TIC-Structural Integrity
41	Perform Rotor Bore Inspection	18 hrs	Fri 3/25/11 11:00 AM	Sat 3/26/11 5:00 AM		TIC-Structural Integrity
42	Purge Rotor Bore & Install Bore Plug	2 hrs	Fri 4/1/11 2:00 AM	Fri 4/1/11 4:00 AM		TIC-Structural Integrity
43	**LPC Rotor Bore/PAUT Inspection Execution Period**	8.04 days	Thu 3/24/11 5:00 AM	Fri 4/1/11 6:00 AM		
45	Set-up PAUT Inspection Equipment	6 hrs	Thu 3/24/11 5:00 AM	Thu 3/24/11 11:00 AM		TIC-Structural Integrity
46	Perform L1, L2, & L3 PAUT Inspections	14 hrs	Thu 3/24/11 11:00 AM	Fri 3/25/11 1:00 AM		TIC-Structural Integrity
47	Set-up for Honing Rotor Bore	6 hrs	Fri 3/25/11 11:00 AM	Fri 3/25/11 5:00 PM		TIC-Structural Integrity
44	Remove Bore Plug	12 hrs	Fri 3/25/11 11:00 PM	Sat 3/26/11 11:00 AM		TIC-Structural Integrity
48	Hone Rotor Bore	16 hrs	Sat 3/26/11 11:00 AM	Sun 3/27/11 3:00 AM		TIC-Structural Integrity
49	Perform Rotor Bore Inspection	16 hrs	Sun 3/27/11 3:00 AM	Sun 3/27/11 7:00 PM		TIC-Structural Integrity
50	Purge Rotor Bore & Install Bore Plug	2 hrs	Fri 4/1/11 4:00 AM	Fri 4/1/11 6:00 AM		TIC-Structural Integrity
53	**Rotor Bore/PAUT Inspection Demobilization**	3 days	Fri 3/25/11 7:00 AM	Mon 3/28/11 7:00 AM		
54	Pack, Load & Ship PAUT Inspection Equipment	12 hrs	Fri 3/25/11 7:00 AM	Fri 3/25/11 7:00 PM		TIC-Structural Integrity-Client
55	Pack, Load & Ship Rotor Bore Honing Equipment	18 hrs	Sun 3/27/11 3:00 AM	Sun 3/27/11 9:00 PM		TIC-Structural Integrity-Client
56	Pack, Load Ship Rotor Bore Inspection Equipment	12 hrs	Sun 3/27/11 7:00 PM	Mon 3/28/11 7:00 AM		TIC-Structural Integrity-Client
51	**LPA, LPB & LPC PAUT Evaluation Period**	2.5 days	Fri 4/1/11 8:00 AM	Sun 4/3/11 8:00 PM		
52	LPA, LPB & LPC PAUT Evaluation period	60 hrs	Fri 4/1/11 8:00 AM	Sun 4/3/11 8:00 PM		TIC-Structural Integrity
98	**LP Rotor LSB Replacement Project Demobilization**	4 days	Fri 4/8/11 11:00 PM	Tue 4/12/11 11:00 PM		
99	Electrically Disconnect Trailers and Equipment	24 hrs	Fri 4/8/11 11:00 PM	Sat 4/9/11 11:00 PM		Client
100	Pack Pack, Load Ship Equipment and Tooling	72 hrs	Sat 4/9/11 11:00 PM	Tue 4/12/11 11:00 PM		TIC-ReGENco-Client
101	Demobilization Complete	0 days	Tue 4/12/11 11:00 PM	Tue 4/12/11 11:00 PM		TIC-ReGENco

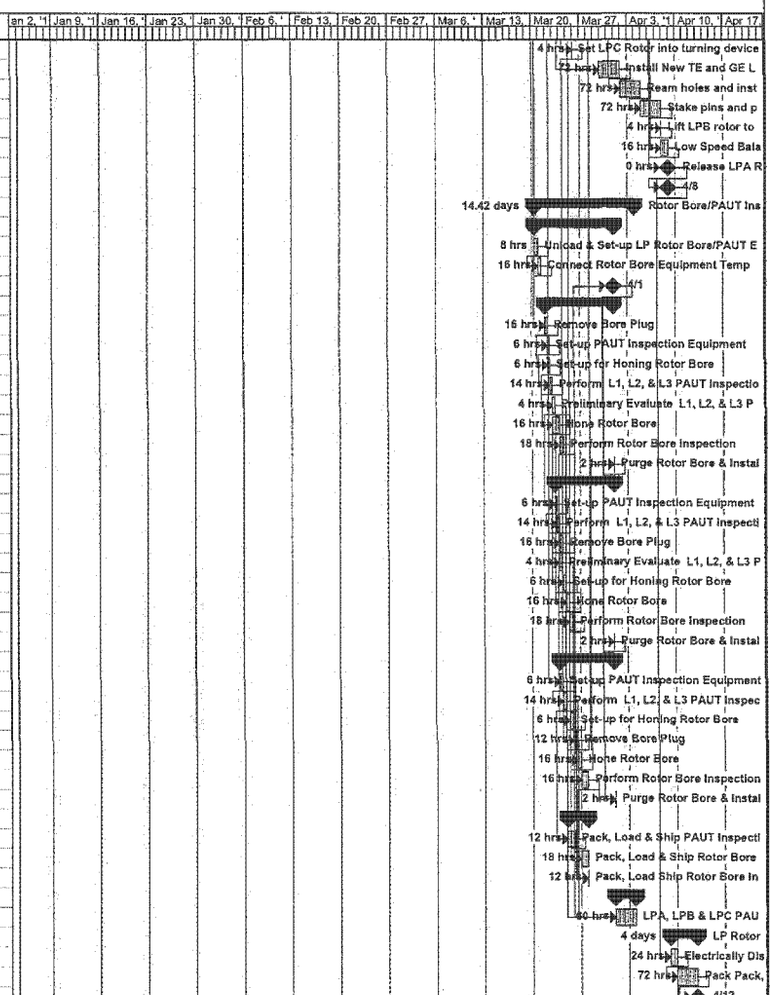

Project: TIC 2011 IPSC Unit #1 Execu
Date: Tue 1/4/11 9:10 PM

Task | Split | Progress | Milestone | Summary

IP7018009

QA Inspection Trip Report - U2 LP Turbine Last Stage Replacement Buckets

On August 21 - 26, 2010, I traveled to Japan to review and approve the Quality Assurance records for the manufacture of the replacement last stage buckets for the Unit 2 low pressure turbines.

Manufacture of five of the six rows of replacement buckets for Unit 2 had been completed before my arrival at the production facility. These five rows of buckets were shipped on August 13 with a scheduled delivery at Intermountain on September 3. Completion of the sixth row of buckets was delayed due to problems with the electron beam welding equipment used to attach the stellite shields to the buckets. This row is the LPC turbine generator-end buckets. The stellite shields have been attached to all these buckets but they still need final machining, moment weighing, and quality assurance measurements before they can be shipped. Scheduled shipment from Japan for this row of buckets is September 16th with delivery at Intermountain during the first week in October. Note that the first five rows were shipped ocean freight and the final row will be shipped air freight.

On August 23, I met with Takenori Suzuki, Project Engineer for our replacement buckets, and Yoshihiro Hirose, Deputy Manager of the Quality Control Group, to review the quality records for the production of the completed five rows of replacement buckets. The Toshiba quality measurements and tests for the production of these buckets are listed below:

Material Test Records - 2 samples from each row of bucket forgings were tested for chemical composition, mechanical properties, non-metal inclusions, grain size, porosity, and segregration. Bucket material was supplied by Ben-xi Special Steel Co. Ltd. The buckets were forged at the Wuxi Turbine Blade Works.

Final Dimensional Inspections - 2 completed buckets from each row were measured at 12 locations and compared to design dwg dimensions. I verified the measured tolerances with the Toshiba design dwgs Airfoil thickness at 4 locations on 9 buckets per row were also measured and compared to design tolerances.

Non-destructive Examinations - Stellite shield attachment joints on each blade were checked with red dye-penentrant. Magnetic particle inspections were also conducted on the every bucket.

Single Bucket Vibration Tests - First axial and tangential natural vibration modes for 25 buckets per row were measured. These were tabulated to show that these frequencies are not close to the 1x and 2x machine frequencies.

Moment Weights - Moment weights for all buckets were measured. These weights will be used for bucket installation sequencing.

Toshiba provided copies of all of their production quality record sheets. These sheets have been scanned and saved in the Quality Assurance section of the project file. None of the tested

buckets in these 5 rows were outside of the Toshiba Quality Control tolerances. The Toshiba bucket manufacturing quality control requirements meet or exceed those of the domestic and other foreign suppliers. Based on my review of these records I am confident that the Toshiba replacement last stage buckets will provide reliable long term service in our turbines.

Toshiba will provide the quality records for the 6th row of buckets when they are completed. They will also provide the complete moment weight record when the 6th row is measured.

On August 23, I was also able to inspect the 6th row of the Unit 2 replacement last stage buckets at the TGTC (Toshiba-GE Turbine Components Co., Ltd) facility where they are being finished. Note that this production facility is a joint venture with GE to manufacture last stage buckets. All of GE's steam turbine last stage buckets are manufactured here. These buckets still require several machining, testing, and measurements before they are completed. Pictures of these buckets in this facility are saved in the Quality Assurance section of the project file.

I also toured the Toshiba steam turbine and generator manufacturing facilities at the Keihin Product Operations site. They are currently manufacturing 3 - 1400 MW nuclear turbine/generators and several fossil and hydro turbine/generators at this facility. They have a lot of turbine/generator manufacturing lined up for several years. Very impressive operation. Sorry, they wouldn't let me take any pictures.

On August 24, I toured several other Toshiba electric power production and distribution equipment manufacturing facilities in the Tokyo/Yokohama area. I visited the Hamakawasaki facility where Toshiba manufactures transformers, switchgear, and surge arrestors. They are the largest Japanese supplier of this equipment. I also toured the Fuchu complex which is Toshiba's largest manufacturing facility where they make their turbine/generator control and information systems among other products.

On August 25, I met with several field service and turbine design engineers at the Keihin facility and discussed turbine maintenance operation issues at Intermountain. We specifically talked about the T4 & T5 bearing temperature problem and turbine alignment/pedestal problems. Toshiba's large steam turbines of Intermountain's size and vintage are very similar to the GE turbines. They have extensive expertise in design and field service on similar turbines that could be a valuable asset to Intermountain if domestic sources dry up.

I also met with Don Haag who is the Toshiba International on-site project coordinator for the Intermountain bucket installation, and all of the Japanese engineers working on our project. We discussed and planned in detail the installation and required support from Japan to make this a successful job. Don Haag traveled to Japan to attend the meetings I had with the Japanese engineers.

In afternoon, Don and I visited the Toshiba main headquarters in downtown Tokyo and met with their Global Thermal Power Sales group. This isn't official, but Toshiba might end up buying

IP7018011

the GE large steam turbine division down the road. If that happens, it would have a big impact on OEM turbine service & maintenance at Intermountain. It looks like Toshiba is positioning themselves to handle a lot more steam turbine/generator service and new installation work in North America.

IP7018012

CUSTOMER : Intermountain Power Service Corporation

PLANT : Intermountain Unit 2 820MW Turbine

PART NAME: Turbine Rotating Blades for L-0 (Last Stage Blades)

QUALITY RECORD

		PAGE			
b	Sep. 29. '10	PAGES 9, 19, 27, 37, 45, 53 of the moment. and 46~52 were added.	Sep. 29. '10 T. Yano	September, 29, 2010 J. Yamamuro	Sep. 29. 2010 Y. Idirose
a	Aug. 17. '10	PAGE 初 版 INITIAL ISSUED	Aug. 17. '10 T. Yano	August, 17, 2010 J. Yamamuro	Aug. 17, 2010 Y. Idirose
変更記号 REV.	発行日付 DATE ISSUED	変更箇所 及び 内容 CHANGED PLACE AND CONTENT	承 認 APPROVED BY	調 査 REVIEWED BY	担 当 PREPARED BY

変 更 REVISIONS

配布先 DISTRIBUTION	部数	火 MX	1									発行課名 ISSUED BY
												TURBINE QC STAFF QUALITY ASSURANCE DEPT.

CONTENTS

		Page T Side	Page G Side
L-0 A/T&G			
1)	Material test record	3 , 4	10 - 14
2)	Dimensional Inspection Record	5 , 6	15, 16
3)	Magnetic Particle Test Record	7	17
4)	Single Bucket Vibration Record	8	18
5)	Moment measurement and arrangement record	9	19
L-0 B/T&G			
1)	Material test record	20- 22	28- 32
2)	Dimensional Inspection Record	23, 24	33, 34
3)	Magnetic Particle Test Record	25	35
4)	Single Bucket Vibration Record	26	36
5)	Moment measurement and arrangement record	27	37
L-0 C/T&G			
1)	Material test record	38 - 40	46-48
2)	Dimensional Inspection Record	41, 42	49, 50
3)	Magnetic Particle Test Record	43	51
4)	Single Bucket Vibration Record	44	52
5)	Moment measurement and arrangement record	45	53

Note;

1) T&G mean, "T" is front side and "G" is rear side (Generator-side) stage of flow .
2) A, B, and C mean the casing respectively.
   "A" is the most front casing, "B" is a casing on a central side,
   "C" means the casing located on the side in the back.

Wuxi turbine Blade works inspection report for raw material

Supplier	Ben-xi Special steel Co. Ltd.				Delivery condition			Annealing					
Material	K11C77E-R4				Steel factory heat. No.			D10035		Size		φ 180	
Surface condition	Finished the bar partly and no defect by vision.							Acceptance standard		PN-KS01161-b			
Commission unit	Inspector							Report No.		60590			
Chemical composition	C	Mn	Cr	Si	Ni	S	P	V	N	Mo	Fe		
Content (%)	0.14	0.85	11.99	0.20	2.75	0.003	0.013	0.34	0.025	1.71	Others		

Mechanical properties	Temperature (°C)		Specimen No.	Rm (Mpa)	Rp0.02 (Mpa)	A (%)	Z (%)	Akv (J)			HB
	Quenching	Tempering									
	1020°C	565°C	1#	1150	820	20	67.5	102.5	98.5	89.5	345
			2#	1140	805	20	67.5	96.5	101.5	88.5	340

Sample No.	High power metallgraphic for raw material							
	Non-metal inclusion				δ-Fe (%)	Grain Size	Microstructure	Others
	A	B	C	D				
1#	0.5 0e	1.0 0e	0.5 0e	1.5 0e	Average<1.5%	6~5grade	Microstructure of tempered Martensite	
2#	0.5 0e	1.0 0e	0.50e	1.5 0e	Average<1.5%	6~5grade		

Sample No.	Low power metallgraphic for raw material				
	Normal porosity	Center porosity	Square segregation	Others	
1#	1.0	1.0	1.0		
2#	1.0	1.0	1.0		

Result:	Results requirements.				
Checker	魏胜根	RE-Checker	张雪彬	Date	2006.09.11

L-0 A/CW (T side)

Reviewed by H. Kawabe
TGTC Apr. 1, 2010

Reviewed by TOSHIBA
Apr. 25, 2010

2006.11.23

3/53

IP7018015

Wuxi turbine Blade works inspection report for raw material

Supplier	Ben-xi Special steel Co. Ltd.				Delivery condition			Annealing					
Material	K11C77E-R4				Steel factory heat No.			D07081		Size		φ 190	
Surface condition	Finished the bar partly and no defect by vision.							Acceptance standard		PN-KS01161-b			
Commission unit	Inspector							Report No.		60344			
Chemical composition	C	Mn	Cr	Si	Ni	S	P	V	N	Mo	Fe		
Content (%)	0.14	0.74	12.32	0.20	2.70	0.004	0.019	0.38	0.026	1.73	Others		

Mechanical properties	Temperature (°C)		Specimen No.	Rm (Mpa)	Rp0.02 (Mpa)	A (%)	Z (%)	Akv (J)			HB
	Quenching	Tempering									
	1020°C	575°C	1#	1200	805	20.0	66.0	85.5	75.5	95	360
			2#	1195	795	20.5	67.5	100.5	95	85.5	358

Sample No.	High power metallgraphic for raw material							
	Non-metal inclusion				δ-Fe (%)	Grain Size	Microstructure	Others
	A	B	C	D				
1#	0.5 0e	1.0 0e	0.5 0e	1.5 0e	Average<1.5%	6grade	Microstructure of tempered Martensite	
2#	0.5 0e	1.0 0e	0.5 0e	1.5 0e	Average<1.5%	6grade		

Sample No.	Low power metallgraphic for raw material				
	Normal porosity	Center porosity	Square segregation	Others	
1#	1.0	1.0	1.0		
2#	1.0	1.0	1.0		

Result:	Results requirements。				
Checker	魏胜根	RE-Checker	张雪彬	Date	2006.04.22

L-0 A/CW (Tside)

Reviewed by H. Kawabe TGTC APR.16.2010

Reviewed by TOSHIBA. G. Hirose Apr. 25, 2010

2006.12.01 质量证明专用章

— 4/53 —

IP7018016

品質記録
QUALITY RECORD

QR−K

PC-B5010-c
Unit : mm

ST No.	

完成品寸法検査
Final Inspection Record

注文主 Customer: TSB
施設名 Plant: XUIN2
機器名 Item: Steam Turbine Bucket
部品名 Part: NN30"B L-0 BKT A/CW
製造番号 Job No.: ———
図面番号 Dwg No.: OKS122973−B
適用規格/要領書 Standard/Procedure: KQ-SI3027-f
判定 Evaluation: ☒合格 Acceptable ☐不合格 Unacceptable

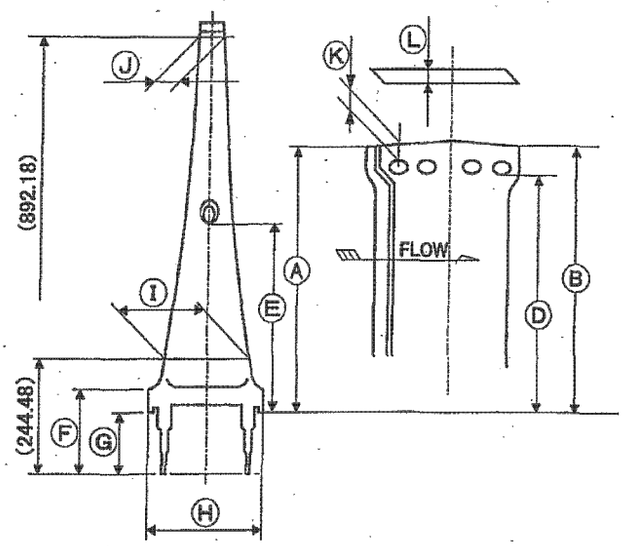

位置 Position		A	B		D	E (Suction)	E (Pressure)	F
図面寸法 Dwg.		790.30	791.70		776.29	400.75	402.12	168.28
公差 Tolerance		+0.20 −0.38	+0.20 −0.38		+0.13 −0.13	+0.13 −0.13	+0.13 −0.13	+0.20 −0.38
実測値 Act.	1	−0.13	−0.38		−0.04	−0.03	+0.01	+0.20
	2	−0.07	−0.38		−0.01	0	+0.03	+0.15
Instrument No.		CMM1	CMM1		CMM1	CMM1	CMM1	CMM1

位置 Position		G	H	I	J	K	L
図面寸法 Dwg.		138.11	254.00	165.76	45.35	7.63	11.64
公差 Tolerance		+0.08 −0.08	+0.40 −0.40	+1.02 −0.38	+1.02 −0.38	+0.26 −0.13	+0.08 −0.08
実測値 Act.	1	−0.03	+0.05	−0.04	+0.75	+0.11	−0.01
	2	−0.06	+0.09	+0.09	+0.86	+0.21	0
Instrument No.		CMM1	CMM1	CMM1	CMM1	CMM1	CMM1

Model 1: S/No. CEW110
Model 2: S/No. CEW43

Reviewed by TOSHIBA J. Hirose JUN. 5, 2010

検査者:[ダイケン] Inspected by 遠藤
検査日付: Inspected date 2010. 5. 28

発行 Issued by Quality Control Staff
立会者 Witnessed by ———
承認 Approved by 木佐貫 2010-5-28
調査 Reviewed by 2010-5-28 工藤
担当 Prepared by 天内 2010-5-28

東芝ジーイータービンコンポーネンツ株式会社
Toshiba GE Turbine Components Co., Ltd.

IP7018017

IGIC
品質記録
QUALITY RECORD

QR−K

PC-B5015-c
Unit : mm
ST No.

羽根有効部肉厚寸法検査
Airfoil Thickness Record

注文主
Customer TSB
施設名
Plant XUIN2
機器名
Item Steam Turbine Bucket
部品名
Part NN30"B L-0 BKT A/CW
製造番号
Job No.
図面番号
Dwg No. OKS122973−B
適用規格/要領書
Standard/Procedure KQ-SI3027-f
判定 ☑合格 Acceptable
Evaluation □不合格 Unacceptable

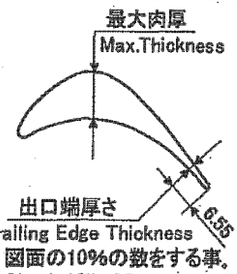

図面の10%の数をする事。
Check 10% of Dwg-total number
図面定数(88)
Quota
*研磨工程内において、羽根全数について計測がおこなわれ、基準値内に仕上げられていることを確認した。

有効長 Active Length	最大肉厚公差 Max. Thickness Tolerance	出口端厚公差 Trailing Edge Thickness Tol.
164.6以下	+0.25 -0.25	+10% -0.13
164.7〜203.6	+0.38 -0.25	+10% -0.25
203.3〜431.8	+0.51 -0.25	+10% -0.25
431.9〜762.0	+0.76 -0.38	+10% -0.25
762.1以上	+0.76 -0.38	+20% -0.25
全ての最終段階	+0.76 −0.38	+0.25 −0.25

備考)Z−Z断面の最大肉厚は出口端より70mmの位置とする。

Section	K−K		H−H		R−R		Z−Z	
Section Height	244.48		396.88		663.58		892.18	
Check Point	Max.	Trail.Edge	Max.	Trail.Edge	Max.	Trail.Edge	Max.	Trail.Edge
Dwg.	20.95	3.39	16.43	2.72	9.52	2.59	5.70	1.54
Tolerance	上表参照							
Tol. Range	21.71 20.57	3.64 3.14	17.19 16.05	2.97 2.47	10.28 9.14	2.84 2.34	6.46 5.32	1.79 1.29
1. CEW110	21.31	3.44	16.73	2.80	9.87	2.71	6.01	1.52
2. CEW43	21.51	3.58	16.81	2.95	9.94	2.83	5.94	1.71
3. CEW73	21.50	3.40	17.06	2.80	10.10	2.78	6.37	1.64
4. CEW78	21.56	3.43	17.10	2.93	10.25	2.76	6.42	1.55
5. CEW87	21.41	3.50	17.00	2.87	10.03	2.67	6.44	1.70
6. CEW56	21.52	3.44	17.05	2.88	9.93	2.66	6.35	1.68
7. CEW4	21.33	3.35	17.05	2.89	10.17	2.77	6.43	1.65
8. CEW18	21.67	3.52	17.13	2.90	10.03	2.83	6.37	1.75
9. CEW60	21.67	3.55	16.95	2.89	10.10	2.79	6.38	1.69
InstrumentNo.	YB403,YB408,YE091,YE044							

Reviewed by TOSHIBA Jun. 5, 2010

検査者:[ダイケン] Inspected by 遠藤
検査日付: Inspected date 2010.5.28

発行 Issued by Quality Control Staff
~~立会者 Witnessed by~~
承認 Approved by 木佐貫 2010-5-28
調査 Reviewed by 工藤 2010-5-28
担当 Prepared by 2010-5-28 大内

東芝ジーイータービンコンポーネンツ株式会社
Toshiba GE Turbine Components Co., Ltd.

IP7018018

TGTC
品質記録
QUALITY RECORD

QR-K

磁粉探傷試験成績書
Magnetic Particle Inspection Record

PC-Z0201-02-a
単位 Unit mm

ST No	

注文主 Customer: TSB
施設名 Plant: XUIN2
機器名 Item: Steam Turbine Bucket
部品名 Part: NN30"B L-0 BKT A/CW
製造番号 Job No.:
図面番号 Drawing No.: OKS122973-B
適用規格/要領書 Standard/Procedure: KQ-SI3036-g

数量 Quantity: 88 Pieces
材質 Material: K11C77E-R4
試験時期 Examination stage: 機械加工研磨完了後 After Final Polishing
試験日付 Examined date: 2010、6、2

探傷条件 Examined Conditions	探傷装置 Equipment: Eishin Kagaku Co., Ltd. TF-50	管理番号 CE0003	表面状態 Surface condition	機械加工及び研磨面 Machining&Polishing Surface
	磁化方法 Magnetization	Head Shot Method and Coil Method	磁粉 Magnetic particle	湿式蛍光磁粉 SY8000 A/1
	磁化電流/時間 Current/Duration	DC1200A 15秒 1回 DC16000AT/ sec. times	標準試験片 Standard T.P.	JIS Z2320-1 A1-30-100 円形
	ブラックライト Black light	L1000	管理番号 CE0003	

探傷範囲 Examined area: All Surface

判定 Evaluation: ☒合格 Acceptable / ☐不合格 Unacceptable

検査本数 Quantity	88Pieces
合格本数 Acceptable	88Pieces

Reviewed by TOSHIBA
Jun. 5. 2010

検査者:[ダイケン] Inspected by: 遠藤
検査日付: Inspected date: 2010、6、2

発行 Issued by: 品質管理部 Quality Control Staff
~~立会者~~ ~~Witnessed by~~

承認 Approved by: 本荘 2010-6-2
調査 Reviewed by: 工藤 2010-6-2
担当 Prepared by: 2010-6-2 大川

東芝ジーイータービンコンポーネンツ株式会社
Toshiba GE Turbine Components Co., Ltd.

IP7018019

TGTC

品質記録
QUALITY RECORD

QR－K

単羽根固有振動数計測記録
(Single Bucket Vibration Record)

PC-B5128-a

単位Unit:Hz

ST NO.	

注文主 Customer: TSB
施設名 Plant: XUIN2
機器名 Item: Steam Turbine Bucket
部品名 Part: NN30"B L-0 BKT A/CW
製造番号 Job No.:
図面番号 Drawing No. OKS122973-B
適用標準／要領書 Standard/Procedure: KQ－SI5101－h
判定 Evaluation: ☑ 合格 Acceptable / ☐ 不合格 Unacceptable

使用計測器 InstrumentNo. 4011H

許容振動数範囲[30 "BKT L.- 0 / 30 "]
Tolerance

☐	接線方向一次 1st Tangential	____Hz～ ____Hz
	軸方向一次 1st Axial	____Hz～ ____Hz
■	中間値に対するバラツキ６％以内 Within 6% Variation To Medium Value	

Criterion

羽根番号 No.	S／No.	接線方向一次 1st Tangential	軸方向一次 1st Axial
1	CEW 30	55	110
2	CEW 80	55	110
3	CEW 93	55	109
4	CEW 118	53	109
5	CEW 31	54	108
6	CEW 98	55	109
7	CEW 100	56	111
8	CEW 85	55	111
9	CEW 52	55	111
10	CEW 88	55	112
11	CEW 56	55	112
12	CEW 99	55	112
13	CEW 114	55	111
14	CEW 95	56	111
15	CW 26	56	111
16	CEW 92	55	112
17	CEW 108	55	112
18	CEW 43	55	110
19	CEW 110	55	109
20	CEW 99	56	113
21	CEW 51	55	111
22	CEW 48	54	110
23	CEW 34	54	109
24	CEW 16	55	113
25	CEW 94	55	111

	Min		Max		Diff.	
接線方向一次 1st Tangential	53	Hz～	56	Hz (	3 Hz	5.5 %)
軸方向一次 1st Axial	108	Hz～	113	Hz (	5 Hz	4.5 %)
チューニング Tuning	無			(	0 Piece)	

Reviewed by TOSHIBA. Jun. 5, 2010

検査者:[ダイケン] Inspected by 金川
検査日付: Inspected date 2010-5-31

発行 Issued by Quality Control Staff
立会者 Witnessed by
承認 Approved by 木佐貫 2010-5-31
調査 Reviewed by 工藤 2010-5-31
担当 Prepared by 2010-5-31 大内

東芝ジーイータービンコンポーネンツ株式会社
Toshiba GE Turbine Components Co., Ltd.

IP7018020

MOMENT WEIGH CHARTING-BKTS PAGE 1/1

XUIN2 NN30"L-0

STAGE AT DWG#: OKS122973

Measured Date: 2010.6.2

VANE SUPPORT B DISTANCE 12 3/8 "

RR= 23.625 " 88 NUMBER OF BUCKETS ON ROW

1lb= 453.592 g

MWT NO.	SERIAL NO.	MOMENT WEIGH	MWT NO.	SERIAL NO.	MOMENT WEIGH
1	CEW 30	1142.19	51	CEW 33	1164.24
2	CEW 80	1164.93	52	CEW 104	1151.31
3	CEW 93	1153.69	53	CEW 35	1158.37
4	CEW 118	1133.72	54	CEW 8	1157.66
5	CEW 31	1155.33	55	ANE 161	1174.55
6	CEW 98	1137.24	56	CEW 12	1148.27
7	CEW 100	1153.91	57	CEW 79	1163.05
8	CEW 85	1158.14	58	ANE 107	1160.96
9	CEW 52	1155.08	59	CEW 67	1162.13
10	CEW 88	1154.39	60	CEW 55	1159.31
11	CEW 56	1158.37	61	CEW 36	1154.61
12	CEW 99	1144.53	62	ANE 165	1127.85
13	CEW 114	1170.57	63	CEW 60	1160.72
14	CEW 95	1150.14	64	CEW 94	1155.77
15	CEW 26	1157.67	65	CEW 18	1165.64
16	CEW 92	1166.35	66	CEW 1	1147.81
17	CEW 108	1154.39	67	CEW 10	1156.73
18	CEW 43	1150.62	68	CEW 69	1144.74
19	CEW 110	1144.06	69	CEW 45	1160.00
20	CEW 97	1157.44	70	ANE 27	1162.36
21	CEW 51	1160.48	71	CEW 74	1152.03
22	CEW 48	1136.30	72	CEW 86	1162.12
23	CEW 34	1150.38	73	ANE 188	1145.93
24	CEW 16	1157.91	74	CEW 27	1132.78
25	CEW 62	1136.77	75	CEW 25	1144.75
26	CEW 3	1133.73	76	CEW 57	1149.21
27	CEW 40	1155.09	77	CEW 81	1152.50
28	CEW 102	1134.19	78	ANE 123	1153.66
29	ANE 194	1136.53	79	CEW 2	1164.95
30	CEW 111	1152.99	80	CEW 90	1152.49
31	CEW 117	1157.90	81	ANE 136	1146.38
32	CEW 42	1154.62	82	CEW 103	1157.90
33	CEW 82	1145.45	83	ANE 73	1150.85
34	CEW 78	1160.26	84	CEW 83	1155.32
35	CEW 87	1153.44	85	CEW 21	1147.80
36	CEW 73	1153.21	86	ANE 104	1130.43
37	CEW 4	1160.71	87	ANE 184	1137.92
38	CEW 76	1141.72	88	ANE 166	1124.55
39	CEW 41	1156.03	89		
40	CEW 64	1162.14	90		
41	CEW 89	1148.05	91		
42	ANE 50	1166.83	92		
43	CEW 68	1149.92	93		
44	CEW 109	1157.43	94		
45	CEW 96	1162.83	95		
46	CEW 71	1137.94	96		
47	CEW 53	1140.77	97		
48	CEW 106	1161.43	98		
49	CEW 5	1145.93	99		
50	CEW 72	1167.29	100		

MWT NO.	SERIAL NO.	MOMENT WEIGH	MWT NO.	SERIAL NO.	MOMENT WEIGH
1	CEW 30	13159485	51	CEW 33	13413485
2	CEW 80	13421478	52	CEW 104	13264558
3	CEW 93	13291907	53	CEW 35	13345869
4	CEW 118	13061842	54	CEW 8	13337617
5	CEW 31	13310787	55	ANE 161	13532297
6	CEW 98	13102455	56	CEW 12	13229519
7	CEW 100	13294456	57	CEW 79	13399789
8	CEW 85	13343234	58	ANE 107	13375637
9	CEW 52	13307979	59	CEW 67	13389117
10	CEW 88	13299986	60	CEW 55	13356671
11	CEW 56	13345869	61	CEW 36	13302578
12	CEW 99	13186444	62	ANE 165	12994184
13	CEW 114	13486457	63	CEW 60	13372959
14	CEW 95	13251078	64	CEW 94	13315929
15	CEW 26	13337747	65	CEW 18	13429643
16	CEW 92	13437766	66	CEW 1	13224162
17	CEW 108	13300029	67	CEW 10	13326989
18	CEW 43	13256609	68	CEW 69	13188864
19	CEW 110	13181001	69	CEW 45	13364577
20	CEW 97	13335155	70	ANE 27	13391839
21	CEW 51	13370150	71	CEW 74	13272767
22	CEW 48	13091610	72	CEW 86	13389074
23	CEW 34	13253844	73	ANE 188	13202473
24	CEW 16	13340599	74	CEW 27	13051041
25	CEW 62	13097011	75	CEW 25	13188907
26	CEW 3	13062015	76	CEW 57	13240364
27	CEW 40	13308109	77	CEW 81	13278254
28	CEW 102	13067286	78	ANE 123	13291604
29	ANE 194	13094202	79	CEW 2	13421650
30	CEW 111	13283871	80	CEW 90	13278125
31	CEW 117	13340469	81	ANE 136	13207701
32	CEW 42	13302665	82	CEW 103	13340469
33	CEW 82	13196986	83	ANE 73	13259201
34	CEW 78	13367601	84	CEW 83	13310744
35	CEW 87	13289099	85	CEW 21	13224119
36	CEW 73	13286377	86	ANE 104	13023909
37	CEW 4	13372786	87	ANE 184	13110231
38	CEW 76	13153998	88	ANE 166	12956250
39	CEW 41	13316910	89		
40	CEW 64	13389247	90		
41	CEW 89	13226927	91		
42	ANE 50	13443339	92		
43	CEW 68	13248443	93		
44	CEW 109	13335068	94		
45	CEW 96	13397283	95		
46	CEW 71	13110491	96		
47	CEW 53	13143110	97		
48	CEW 106	13381081	98		
49	CEW 5	13202516	99		
50	CEW 72	13448610	100		

Reviewed by
TOSHIBA

Jun, 15. 2010

IP7018021

Wuxi turbine Blade works inspection report for raw material

Supplier	Ben-xi Special steel Co. Ltd.				Delivery condition			Annealing				
Material	K11C77E-R4				Steel factory heat No.			D10035		Size	φ 180	
Surface condition	Finished the bar partly and no defect by vision.							Acceptance standard		PN-KS01161-b		
Commission unit	Inspector							Report No.		60590		
Chemical composition	C	Mn	Cr	Si	Ni	S	P	V	N	Mo	Fe	
Content (%)	0.14	0.85	11.99	0.20	2.75	0.003	0.013	0.34	0.025	1.71	Others	

Mechanical properties	Temperature (°C)		Specimen No.	Rm (Mpa)	Rp0.02 (Mpa)	A (%)	Z (%)	Akv (J)			HB
	Quenching	Tempering									
	1020°C	565°C	1#	1150	820	20	67.5	102.5	98.5	89.5	345
			2#	1140	805	20	67.5	96.5	101.5	88.5	340

Sample No.	High power metallgraphic for raw material							
	Non-metal inclusion				δ-Fe (%)	Grain Size	Microstructure	Others
	A	B	C	D				
1#	0.5 0e	1.0 0e	0.5 0e	1.5 0e	Average<1.5%	6~5grade	Microstructure of tempered Martensite	
2#	0.5 0e	1.0 0e	0.50e	1.5 0e	Average<1.5%	6~5grade		

Sample No.	Low power metallgraphic for raw material			
	Normal porosity	Center porosity	Square segregation	Others
1#	1.0	1.0	1.0	
2#	1.0	1.0	1.0	

Result:	Results requirements。				
Checker	魏胜根	RE-Checker	张雪彬	Date	2006.09.11

L-0 A/CCW (G side)

Reviewed by H-Kanabe TGTC APR.9.2010

Reviewed by TOSHIBA

J. Ishiwae Apr. 25, 2010

2006.11.23 质量证明专用章

-10/53

IP70180022

Wuxi turbine Blade works inspection report for raw material

Supplier	Ben-xi Special steel Co. Ltd.				Delivery condition			Annealing					
Material	K11C77E-R4				Steel factory heat No.			D07082		Size		φ 180	
Surface condition	Finished the bar partly and no defect by vision.							Acceptance standard		PN-KS01161-b			
Commission unit	Inspector							Report No.		60229			
Chemical composition	C	Mn	Cr	Si	Ni	S	P	V	N	Mo	Fe		
Content (%)	0.13	0.82	12.30	0.22	2.69	0.007	0.012	0.34	0.022	1.79	Others		
Mechanical properties	Temperature (℃)		Specimen No.		Rm Mpa	Rp0.02MPa	A%	Z%	Akv			HB	
	Quenching	Tempering											
	1020℃	570℃	1#		1200	850	18.0	64.0	150	125	125	362	
			2#		1200	840	19.0	65.0	156	118	125	360	

Sample No.	High power metallgraphic for raw material							
	Non-metal inclusion				δ-Fe (%)	Grain Size	Microstructure	Others
	A	B	C	D				
1#	0.5 0e	1.0 0e	0.5 0e	1.5 0e	Average<1.5%	6grade	Microstructure of tempered Martensite	
2#	0.5 0e	1.0 0e	0.50e	1.5 0e	Average<1.5%	6grade		

Sample No.	Low power metallgraphic for raw material			
	Normal porosity	Center porosity	Square segregation	Others
1#	1.0	1.0	1.0	
2#	1.0	1.0	1.0	

Result:	Results requirements。				
Checker	魏胜根	RE-Checker	张雪彬	Date	2006.04.21

L-0 A/CCW (G side)

Reviewed by H. Kawabe TGTC APR. 9. 2010

Reviewed by TOSHIBA G. Hirose Apr. 25, 2010

2008 11 23 质量证明专用章

11/13

IP7018023

Wuxi turbine Blade works inspection report for raw material

Supplier	Ben-xi Special steel Co. Ltd.				Delivery condition			Annealing					
Material	K11C77E-R4				Steel factory heat No.			D07081		Size		φ 190	
Surface condition	Finished the bar partly and no defect by vision.							Acceptance standard		PN-KS01161-b			
Commission unit	Inspector							Report No.		60344			
Chemical composition	C	Mn	Cr	Si	Ni	S	P	V	N	Mo	Fe		
Content (%)	0.14	0.74	12.32	0.20	2.70	0.004	0.019	0.38	0.026	1.73	Others		
Mechanical properties	Temperature (°C)		Specimen No.		Rm (Mpa)	Rp0.02 (Mpa)	A (%)	Z (%)	Akv (J)			HB	
	Quenching	Tempering											
	1020°C	575°C	1#		1200	805	20.0	66.0	85.5	75.5	95	360	
			2#		1195	795	20.5	67.5	100.5	95	85.5	358	
Sample No.	High power metallgraphic for raw material												
	Non-metal inclusion				δ-Fe (%)	Grain Size	Microstructure				Others		
	A	B	C	D									
1#	0.5 0e	1.0 0e	0.5 0e	1.5 0e	Average<1.5%	6grade	Microstructure of tempered Martensite						
2#	0.5 0e	1.0 0e	0.5 0e	1.5 0e	Average<1.5%	6grade							
Sample No.	Low power metallgraphic for raw material												
	Normal porosity		Center porosity		Square segregation		Others						
1#	1.0		1.0		1.0								
2#	1.0		1.0		1.0								
Result:	Results requirements.												
Checker	魏胜根		RE-Checker		张雪彬			Date		2006.04.22			

L-0 A/CCW (G side)

Reviewed by H. Kanabe TGTC APR. 9. 2010

Reviewed by TOSHIBA J. Hirose Apr. 28, 2010

2006.11.23 质量证明专用章

-12/53

IP7018024

Wuxi turbine Blade works inspection report for raw material

Supplier	Ben-xi Special steel Co. Ltd.				Delivery condition			Annealing					
Material	K11C77E-R4				Steel factory heat No.			D07082		Size		φ 180	
Surface condition	Finished the bar partly and no defect by vision.							Acceptance standard		PN-KS01161-b			
Commission unit	Inspector							Report No.		60229			
Chemical composition	C	Mn	Cr	Si	Ni	S	P	V	N	Mo	Fe		
Content (%)	0.13	0.82	12.30	0.22	2.69	0.007	0.012	0.34	0.022	1.79	Others		

Mechanical properties	Temperature (°C) Quenching	Temperature (°C) Tempering	Specimen No.	Rm Mpa	Rp0.02MPa	A%	Z%	Akv			HB
	1020°C	570°C	1#	1200	850	18.0	64.0	150	125	125	362
			2#	1200	840	19.0	65.0	156	118	125	360

Sample No.	High power metallgraphic for raw material							
	Non-metal inclusion				δ-Fe (%)	Grain Size	Microstructure	Others
	A	B	C	D				
1#	0.5 0e	1.0 0e	0.5 0e	1.5 0e	Average<1.5%	6grade	Microstructure of tempered Martensite	
2#	0.5 0e	1.0 0e	0.50e	1.5 0e	Average<1.5%	6grade		

Sample No.	Low power metallgraphic for raw material				
	Normal porosity	Center porosity	Square segregation	Others	
1#	1.0	1.0	1.0		
2#	1.0	1.0	1.0		

Result:	Results requirements。				
Checker	魏胜根	RE-Checker	张雪彬	Date	2006.04.21

L-0 A/CCW (G side)

Reviewed by M-Kawabe
TGTC APR.28.2010

Reviewed by
TOSHIBA

J. Ichimae
May. 10, 2010

2006.12.01
质量检测专用章

-13/23

IP7018025

Wuxi turbine Blade works inspection report for raw material

Supplier	Ben-xi Special steel Co. Ltd.				Delivery condition			Annealing					
Material	K11C77E-R4				Steel factory heat No.			D07081		Size		φ 190	
Surface condition	Finished the bar partly and no defect by vision.							Acceptance standard		PN-KS01161-b			
Commission unit	Inspector							Report No.		60344			
Chemical composition	C	Mn	Cr	Si	Ni	S	P	V	N	Mo	Fe		
Content (%)	0.14	0.74	12.32	0.20	2.70	0.004	0.019	0.38	0.026	1.73	Others		

Mechanical properties	Temperature (°C)		Specimen No.	Rm (Mpa)	Rp0.02 (Mpa)	A (%)	Z (%)	Akv (J)			HB
	Quenching	Tempering									
	1020°C	575°C	1#	1200	805	20.0	66.0	85.5	75.5	95	360
			2#	1195	795	20.5	67.5	100.5	95	85.5	358

Sample No.	High power metallgraphic for raw material							
	Non-metal inclusion				δ-Fe (%)	Grain Size	Microstructure	Others
	A	B	C	D				
1#	0.5 0e	1.0 0e	0.5 0e	1.5 0e	Average<1.5%	6grade	Microstructure of tempered Martensite	
2#	0.5 0e	1.0 0e	0.5 0e	1.5 0e	Average<1.5%	6grade		

Sample No.	Low power metallgraphic for raw material				
	Normal porosity	Center porosity	Square segregation	Others	
1#	1.0	1.0	1.0		
2#	1.0	1.0	1.0		

Result:	Results requirements。				
Checker	魏胜根	RE-Checker	张雪彬	Date	2006.04.22

L-0 A/CCW (G side)

Reviewed by H.Kanabe TGTC APR. 28.2010

Reviewed by TOSHIBA G.Hirose MAY.10.2010

2006.12.02

-14/35

IP7018026

品質記録
QUALITY RECORD

QR−K

PC-B5010

完成品寸法検査
Final Inspection Record

Unit : mm

注文主 Customer: TSB
施設名 Plant: XUIN2
機器名 Item: Steam Turbine Bucket
部品名 Part: NN30"B L-0 BKT A/CCW
製造番号 Job No.: ——
図面番号 Dwg No.: OKS122973−B
適用規格/要領書 Standard/Procedure: KQ-SI3027-f
判定 Evaluation: ☑合格 Acceptable ☐不合格 Unacceptable

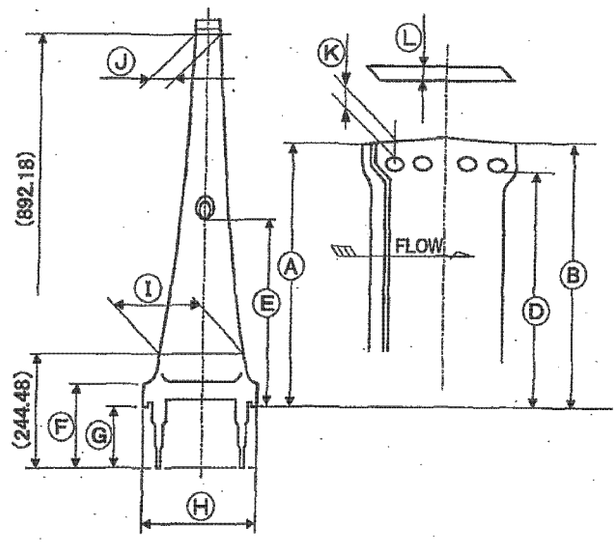

位置 Position		A	B		D	E (Suction)	E (Pressure)	F
図面寸法 Dwg.		790.30	791.70		776.29	400.75	402.12	168.28
公差 Tolerance		+0.20 −0.38	+0.20 −0.38		+0.13 −0.13	+0.13 −0.13	+0.13 −0.13	+0.20 −0.38
実測値 Act.	1	+0.02	+0.08		−0.01	−0.02	+0.03	−0.18
	2	−0.02	+0.02		−0.04	−0.02	−0.04	+0.18
Instrument No.		CMM1	CMM1		CMM1	CMM1	CMM1	CMM1

位置 Position		G	H	I	J	K	L
図面寸法 Dwg.		138.11	254.00	165.76	45.35	7.63	11.64
公差 Tolerance		+0.08 −0.08	+0.40 −0.40	+1.02 −0.38	+1.02 −0.38	+0.26 −0.13	+0.08 −0.08
実測値 Act.	1	−0.01	+0.06	−0.29	−0.34	+0.09	+0.03
	2	+0.04	+0.06	−0.25	+0.01	+0.06	+0.03
Instrument No.		CMM1	CMM1	CMM1	CMM1	CMM1	CMM1

Model 1: S/No. ANT166
Model 2: S/No. ANT205

Reviewed by TOSHIBA Jul. 10. 2010

検査者:[ダイケン] Inspected by: 小栗
検査日付: Inspected date: 2010-6-29

発行 Issued by: Quality Control Staff
立会者 Witnessed by: ——
承認 Approved by: 木佐貫 2010-6-29
調査 Reviewed by: 工藤 2010-6-29
担当 Prepared by: 大内 2010-6-29

東芝ジーイータービンコンポーネンツ株式会社
Toshiba GE Turbine Components Co., Ltd.

-15/53

IP7018027

TGTC
品質記録
QUALITY RECORD

QR−K

PC−B5015
Unit : mm

羽根有効部肉厚寸法検査
Airfoil Thickness Record

注文主 Customer: TSB
施設名 Plant: XUIN2
機器名 Item: Steam Turbine Bucket
部品名 Part: NN30"B L-0 BKT A/CCW
製造番号 Job No.: ——
図面番号 Dwg No.: OKS122973−B
適用規格/要領書 Standard/Procedure: KQ-SI3027-f
判定 Evaluation: □合格 Acceptable □不合格 Unacceptable

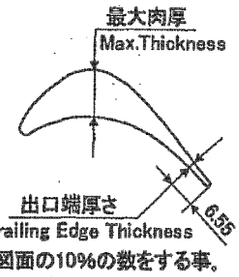

図面の10%の数をする事。
Check 10% of Dwg-total number
図面定数(88)
Quota
*研磨工程内において、羽根全数について計測がおこなわれ、基準値内に仕上げられていることを確認した。

有効長 Active Length	最大肉厚公差 Max. Thickness Tolerance	出口端厚公差 Trailing Edge Thickness Tol.
~~161.6以下~~	~~+0.25 −0.25~~	~~+10% −0.13~~
~~161.7~203.8~~	~~+0.38 −0.25~~	~~+10% −0.25~~
~~203.3~431.8~~	~~+0.51 −0.25~~	~~+10% −0.25~~
~~431.9~762.0~~	~~+0.76 −0.38~~	~~+10% −0.25~~
~~762.1以上~~	~~+0.76 −0.38~~	~~+20% −0.25~~
全ての最終段階	+0.76 −0.38	+0.25 −0.25

備考)Z−Z断面の最大肉厚は出口端より70mmの位置とする。

Section	K−K		H−H		R−R		Z−Z	
Section Height	244.48		396.88		663.58		892.18	
Check Point	Max.	Trail.Edge	Max.	Trail.Edge	Max.	Trail.Edge	Max.	Trail.Edge
Dwg.	20.95	3.39	16.43	2.72	9.52	2.59	5.70	1.54
Tolerance	上表参照							
Tol. Range	21.71 20.57	3.64 3.14	17.19 16.05	2.97 2.47	10.28 9.14	2.84 2.34	6.46 5.32	1.79 1.29
1. ANT166	21.61	3.55	16.87	2.94	9.92	2.58	6.36	1.77
2. ANT205	20.94	3.17	16.58	2.75	9.55	2.34	6.39	1.50
3. ANT159	21.46	3.39	17.07	2.79	9.80	2.52	6.34	1.46
4. ANT142	21.08	3.46	16.60	2.76	9.40	2.39	6.15	1.59
5. ANT135	21.09	3.33	16.69	2.78	9.79	2.56	6.01	1.42
6. ANT155	21.40	3.45	16.95	2.88	9.97	2.75	6.35	1.63
7. ANT114	21.20	3.41	16.58	2.89	9.95	2.34	6.36	1.57
8. ANT167	21.37	3.50	16.98	2.75	9.93	2.83	6.35	1.79
9. ANT198	21.50	3.42	17.01	2.89	9.98	2.69	6.13	1.42
InstrumentNo.	YB403,YB408,YE091,YE044							

Reviewed by TOSHIBA Jul 10, 2010

検査者:[ダイケン] Inspected by: 上野
検査日付: Inspected date: 2010.6.29

発行 Issued by: Quality Control Staff
~~立会者 Witnessed by~~
承認 Approved by: 本佐貫 2010-6-29
調査 Reviewed by: 工藤 2010-6-29
担当 Prepared by: 大内 2010-6-29

東芝ジーイータービンコンポーネンツ株式会社
Toshiba GE Turbine Components Co., Ltd.

16/53

IP7018028

TGTC

品質記録
QUALITY RECORD

QR-K

磁粉探傷試験成績書
Magnetic Particle Inspection Record

PG-Z0201-02
単位 Unit mm

注文主 Customer: TSB
施設名 Plant: XUIN2
機器名 Item: Steam Turbine Bucket
部品名 Part: NN30"B L-0 BKT A/CCW
製造番号 Job No.:
図面番号 Drawing No.: OKS122973-B
適用規格/要領書 Standard/Procedure: KQ-SI3036-g

数量 Quantity	88 Pieces	材質 Material	K11C77E-R4
試験時期 Examination stage	機械加工研磨完了後 After Final Polishing	試験日付 Examined date	2010-7-7

探傷条件 Examined Conditions				
	探傷装置 Equipment	Eishin Kagaku Co., Ltd. TF-50	管理番号	CE0003
	表面状態 Surface condition	機械加工及び研磨面 Machining&Polishing Surface		
	磁化方法 Magnetization	Head Shot Method and Coil Method		
	磁粉 Magnetic particle	湿式蛍光磁粉 SY8000 A/1		
	磁化電流/時間 Current/Duration	DC1200A 15秒 1回 / DC16000AT/ sec. times		
	標準試験片 Standard T.P.	JIS Z2320-1 A1-30-100 円形		
	ブラックライト Black light	L1000	管理番号	CE0003

探傷範囲 Examined area: All Surface

判定 Evaluation: ☑合格 Acceptable / □不合格 Unacceptable

検査本数 Quantity	88Pieces
合格本数 Acceptable	88Pieces

Reviewed by TOSHIBA
Jul. 10, 2010

検査者:[ダイケン] Inspected by: 小栗
検査日付: Inspected date: 2010-7-7

発行 Issued by: 品質管理部 Quality Control Staff
~~立会者 Witnessed by~~

承認 Approved by: 木佐貫 2010-7-7
調査 Reviewed by: 工藤 2010-7-7
担当 Prepared by: 天内 2010-7-7

東芝ジーイータービンコンポーネンツ株式会社
Toshiba GE Turbine Components Co., Ltd.

IP7018029

IGIC
品質記録
QUALITY RECORD

QR-K

単羽根固有振動数計測記録
(Single Bucket Vibration Record)

PC-B5128

単位Unit:Hz

ST NO.	

注文主 Customer: TSB
施設名 Plant: XUIN2
機器名 Item: Steam Turbine Bucket
部品名 Part: NN30"B L-0 BKT A/CCW
製造番号 Job No.:
図面番号 Drawing No. OKS122973-B
適用標準／要領書 Standard/Procedure / KQ-SI5101-h
判定 Evaluation: ☑ 合格 Acceptable / ☐ 不合格 Unacceptable

使用計測器 Instrument No. 4011H

許容振動数範囲 Tolerance [30"BKT L- 0 / 30"]

☐	接線方向一次 1st Tangential	____Hz～ ____Hz
	軸方向一次 1st Axial	____Hz～ ____Hz
■ Criterion	中間値に対するバラツキ6%以内 Within 6% Variation To Medium Value	

羽根番号 No.	S／No.	接線方向一次 1st Tangential	軸方向一次 1st Axial
1	ANT 159	54	108
2	ANT 198	55	109
3	ANT 189	53	111
4	ANT 114	53	111
5	ANT 155	54	109
6	ANT 202	54	108
7	ANT 161	54	111
8	ANT 153	53	111
9	APA 59	55	111
10	ANT 187	54	109
11	ANT 207	54	108
12	ANT 135	53	106
13	ANT 166	54	108
14	ANT 167	54	107
15	ANT 111	55	110
16	ANT 177	53	106
17	CEX 3	54	108
18	ANT 130	54	108
19	ANT 197	54	108
20	APA 75	54	107
21	ANT 201	55	106
22	ANT 156	55	109
23	ANT 125	52	108
24	ANT 136	54	111
25	ANT 168	54	112

	Min		Max		Diff.		
接線方向一次 1st Tangential	52	Hz～	55	Hz (	3	Hz	5.6 %)
軸方向一次 1st Axial	106	Hz～	112	Hz (	6	Hz	5.5 %)
チューニング Tuning	無			(	0 Piece)		

Reviewed by TOSHIBA Jul. 10. 2010

検査者:[ダイケン] Inspected by 金
検査日付: Inspected date 2010.7.6

発行 Issued by: Quality Control Staff
立会者 Witnessed by:

承認 Approved by 木佐貫 2010-7-6
調査 Reviewed by 工藤 2010-7-6
担当 Prepared by 天内 2010-7-6

東芝ジーイータービンコンポーネンツ株式会社
Toshiba GE Turbine Components Co., Ltd.

IP7018030

MOMENT WEIGH CHARTING-BKTS PAGE 1/1

XUIN2 NN30"L-0

STAGE AG DWG#: OKS122973

Measured Date: 2010.7.9

VANE SUPPORT B DISTANCE 12 3/8 "

RR= 23.625 " 88 NUMBER OF BUCKETS ON ROW

1lb= 453.592 g

MWT NO.	SERIAL NO.	MOMENT WEIGH	MWT NO.	SERIAL NO.	MOMENT WEIGH
1	ANT 159	1141.73	51	ANT 171	1133.25
2	ANT 198	1150.41	52	ANT 200	1147.32
3	ANT 189	1123.18	53	ANT 191	1166.83
4	ANT 114	1127.17	54	APA 48	1159.30
5	ANT 155	1145.01	55	ANT 218	1136.54
6	ANT 202	1151.10	56	ANT 185	1118.23
7	ANT 161	1146.40	57	ANT 206	1153.23
8	ANT 153	1132.07	58	ANT 205	1120.33
9	APA 59	1158.38	59	ANT 142	1122.93
10	ANT 187	1158.15	60	ANT 154	1133.03
11	ANT 207	1143.36	61	ANT 107	1144.51
12	ANT 135	1120.11	62	APA 35	1137.26
13	ANT 166	1149.93	63	ANT 182	1134.20
14	ANT 167	1143.59	64	ANT 157	1141.49
15	ANT 111	1163.79	65	ANT 208	1140.53
16	ANT 177	1129.74	66	APA 77	1142.89
17	CEX 3	1134.89	67	ANT 196	1133.72
18	ANT 130	1129.03	68	ANT 219	1151.79
19	ANT 197	1133.26	69	ANT 106	1136.78
20	APA 75	1145.00	70	ANT 162	1143.12
21	ANT 201	1135.84	71	APA 69	1150.16
22	ANT 156	1159.33	72	ANT 180	1132.08
23	ANT 125	1124.83	73	ANT 174	1162.61
24	ANT 136	1129.49	74	CEX 2	1159.33
25	ANT 168	1136.07	75	ANT 27	1138.67
26	ANT 160	1129.95	76	APA 29	1142.41
27	ANT 190	1154.38	77	APA 38	1150.87
28	ANT 178	1154.86	78	ANT 75	1155.08
29	ANT 29	1134.41	79	ANT 61	1142.89
30	ANT 179	1129.97	80	APA 18	1159.56
31	ANT 184	1154.39	81	ANT 123	1127.87
32	ANT 64	1151.09	82	APA 41	1151.81
33	ANT 216	1137.47	83	ANT 77	1159.77
34	ANT 134	1140.99	84	ANT 89	1160.97
35	APA 42	1157.91	85	ANT 120	1149.45
36	APA 74	1174.34	86	ANT 62	1147.11
37	ANT 195	1155.33	87	APA 80	1154.61
38	ANT 152	1139.13	88	ANT 122	1141.93
39	ANT 170	1163.07	89		
40	ANT 210	1155.09	90		
41	ANT 118	1141.00	91		
42	ANT 203	1135.59	92		
43	ANT 217	1134.85	93		
44	ANT 204	1128.81	94		
45	ANT 214	1157.45	95		
46	ANT 215	1127.61	96		
47	ANT 131	1152.73	97		
48	ANT 199	1132.54	98		
49	ANT 76	1147.11	99		
50	ANT 103	1149.92	100		

MWT NO.	SERIAL NO.	MOMENT WEIGH	MWT NO.	SERIAL NO.	MOMENT WEIGH
1	ANT 159	13154084	51	ANT 171	13056398
2	ANT 198	13254103	52	ANT 200	13218545
3	ANT 189	12940394	53	ANT 191	13443339
4	ANT 114	12986364	54	APA 48	13356541
5	ANT 155	13191888	55	ANT 218	13094289
6	ANT 202	13262139	56	ANT 185	12883407
7	ANT 161	13207917	57	ANT 206	13286593
8	ANT 153	13042875	58	ANT 205	12907602
9	APA 59	13345999	59	ANT 142	12937542
10	ANT 187	13343277	60	ANT 154	13053893
11	ANT 207	13172965	61	ANT 107	13186185
12	ANT 135	12905096	62	APA 35	13102584
13	ANT 166	13248573	63	ANT 182	13067372
14	ANT 167	13175600	64	ANT 157	13151362
15	ANT 111	13408300	65	ANT 208	13140345
16	ANT 177	13016002	66	APA 77	13167521
17	CEX 3	13075322	67	ANT 196	13061885
18	ANT 130	13007836	68	ANT 219	13270089
19	ANT 197	13056528	69	ANT 106	13097097
20	APA 75	13191759	70	ANT 162	13170113
21	ANT 201	13086296	71	APA 69	13251251
22	ANT 156	13356887	72	ANT 180	13043005
23	ANT 125	12959447	73	ANT 174	13394691
24	ANT 136	13013151	74	CEX 2	13356887
25	ANT 168	13088975	75	ANT 27	13118872
26	ANT 160	13018465	76	APA 29	13161947
27	ANT 190	13299857	77	APA 38	13259460
28	ANT 178	13305430	78	ANT 75	13307936
29	ANT 29	13069749	79	ANT 61	13167521
30	ANT 179	13018638	80	APA 18	13359609
31	ANT 184	13299943	81	ANT 123	12994443
32	ANT 64	13261923	82	APA 41	13270218
33	ANT 216	13105004	83	ANT 77	13361985
34	ANT 134	13145659	84	ANT 89	13375767
35	APA 42	13340512	85	ANT 120	13243042
36	APA 74	13529835	86	ANT 62	13216083
37	ANT 195	13310874	87	APA 80	13302535
38	ANT 152	13124230	88	ANT 122	13156460
39	ANT 170	13400005	89		
40	ANT 210	13308109	90		
41	ANT 118	13145702	91		
42	ANT 203	13083401	92		
43	ANT 217	13072514	93		
44	ANT 204	13005244	94		
45	ANT 214	13335198	95		
46	ANT 215	12991505	96		
47	ANT 131	13280890	97		
48	ANT 199	13048233	98		
49	ANT 76	13216126	99		
50	ANT 103	13248486	100		

Reviewed by
TOSHIBA

G. Ichinose
Jul. 20, 2010

Wuxi turbine Blade works inspection report for raw material

Supplier	Ben-xi Special steel Co. Ltd.				Delivery condition			Annealing					
Material	K11C77E-R4				Steel factory heat No.			D07081		Size		φ 190	
Surface condition	Finished the bar partly and no defect by vision.							Acceptance standard		PN-KS01161-b			
Commission unit	Inspector							Report No.		60344			
Chemical composition	C	Mn	Cr	Si	Ni	S	P	V	N	Mo	Fe		
Content (%)	0.14	0.74	12.32	0.20	2.70	0.004	0.019	0.38	0.026	1.73	Others		

Mechanical properties	Temperature (°C)		Specimen No.	Rm (Mpa)	Rp0.02 (Mpa)	A (%)	Z (%)	Akv (J)			HB
	Quenching	Tempering									
	1020°C	575°C	1#	1200	805	20.0	66.0	85.5	75.5	95	360
			2#	1195	795	20.5	67.5	100.5	95	85.5	358

Sample No.	High power metallgraphic for raw material							
	Non-metal inclusion				δ-Fe (%)	Grain Size	Microstructure	Others
	A	B	C	D				
1#	0.5 0e	1.0 0e	0.5 0e	1.5 0e	Average<1.5%	6grade	Microstructure of tempered Martensite	
2#	0.5 0e	1.0 0e	0.5 0e	1.5 0e	Average<1.5%	6grade		

Sample No.	Low power metallgraphic for raw material			
	Normal porosity	Center porosity	Square segregation	Others
1#	1.0	1.0	1.0	
2#	1.0	1.0	1.0	

Result: Results requirements。

Checker	魏胜根	RE-Checker	张雪彬	Date	2006.04.22

2006.12.01 质量证明专用章

L-0 B/CW (T side)

Reviewed by H. Kawabe TGTC APR.16.2010

Reviewed by TOSHIBA Y. Ichirose Apr. 25, 2010

20/53

IP7018032

Wuxi Turbine Blade Co.,Ltd. inspection report for raw material

Supplier	BAOSHAN IRON & STEEL CO.,LTD	Delivery Condition	Annealing				
Material	K11C77E-R4	Steel Factory Heat No.	973D0035	Size	ϕ180	Rep. No.	0901000592
Surface Condition	No Defect		Standard	PN-KS01161-c			

Chem. Composition	C	Mn	Cr	Si	Ni	S	P	V	Mo	N	Cu	Al	Nb	Sn	CE
Requirement	0.10-0.17	0.65-1.05	11.25-12.75	0.10-0.35	2.25-3.25	≤0.015	≤0.020	0.25-0.40	1.50-2.00	0.020-0.045	–	–	–	–	≤9.0
Content(%)	0.13	0.79	11.62	0.19	2.70	0.002	0.015	0.31	1.69	0.031	0.06	0.020	0.010	0.010	4.4
Content of WTB(%)	0.12	0.78	11.72	0.17	2.72	0.001	0.020	0.31	1.66	0.022	0.06	0.022	0.003	0.004	4.9

Heat-Treat Condition				Mechanical Property								
	Quenching	Tempering	Tempering	Specimen No.	Rm(Mpa) ≥1110	Rp0.02(Mpa) ≥765	A(%) ≥13	Z(%) ≥30	Akv(J) ≥54			HB 331~375
Temp.	1020℃	565℃	565℃									
				1#	1140	820	19.0	76.5	193	198	206	356
				2#	1140	835	17.5	76.5	212	205	204	354

Metallographic Microstructure of Raw Material

Sample No.	Non-metal inclusion A	B	C	D	δ-Fe(%) ≤1.0%	Microstructure (Uniform tempered martensite)	Grain Size Better than Grade 4	Remark:
1#	0, 0.5e	0, 0.5e	0, 0.5e	0, 1.5e	<0.5%	Uniform tempered martensite	5grade	
2#	0, 0.5e	0, 0.5e	0, 0.5e	0, 1.5e	<0.5%		5grade	

Sample No.	Metallographic Macrostructure of Raw Material: Normal porosity	Center porosity	Square segregation	Others
1#	1.0	1.0	1.0	–
2#	1.0	1.0	1.0	–

Surface inspection

无锡透平叶片有限公司 质保专用章 2010.11 Accepted Wuxi Turbine Blade Co., Ltd.

Result:	Results Meet With Requirements				
Checker	李敏捷	Review	魏胜根	Date	2009.10.28

L-0 B/CW (Tside)

Reviewed by TGTC Mar. 26. '10 J. Osuna

Reviewed by TOSHIBA J. Hirose Apr. 25, 2010

21/53

IP7018033

Wuxi turbine Blade works inspection report for raw material

Supplier	Ben-xi Special steel Co. Ltd.				Delivery condition			Annealing				
Material	K11C77E-R4				Steel factory heat No.			D10035		Size	ϕ 180	
Surface condition	Finished the bar partly and no defect by vision.							Acceptance standard		PN-KS01161-b		
Commission unit	Inspector							Report No.		60590		
Chemical composition	C	Mn	Cr	Si	Ni	S	P	V	N	Mo	Fe	
Content (%)	0.14	0.85	11.99	0.20	2.75	0.003	0.013	0.34	0.025	1.71	Others	

Mechanical properties	Temperature (°C)		Specimen No.	Rm (Mpa)	Rp0.02 (Mpa)	A (%)	Z (%)	Akv (J)			HB
	Quenching	Tempering									
	1020°C	565°C	1#	1150	820	20	67.5	102.5	98.5	89.5	345
			2#	1140	805	20	67.5	96.5	101.5	88.5	340

Sample No.	High power metallgraphic for raw material							
	Non-metal inclusion				δ-Fe (%)	Grain Size	Microstructure	Others
	A	B	C	D				
1#	0.5 0e	1.0 0e	0.5 0e	1.5 0e	Average<1.5%	6~5grade	Microstructure of tempered Martensite	
2#	0.5 0e	1.0 0e	0.50e	1.5 0e	Average<1.5%	6~5grade		

Sample No.	Low power metallgraphic for raw material			
	Normal porosity	Center porosity	Square segregation	Others
1#	1.0	1.0	1.0	
2#	1.0	1.0	1.0	

Result:	Results requirements。				
Checker	魏胜根	RE-Checker	张雪彬	Date	2006.09.14

L-0 B/CW (Tside)

Reviewed by H.Kawabe TGTC APR.16.2010

Reviewed by TOSHIBA J.Hirose APR.25,2010

2006.12.01 质量证明专用章

22/53

IP7018034

品質記録
QUALITY RECORD

QR−K

PC−B5010−c
Unit : mm
ST No.

完成品寸法検査
Final Inspection Record

注文主 Customer: TSB
施設名 Plant: XUIN2
機器名 Item: Steam Turbine Bucket
部品名 Part: NN30"B L-0 BKT B/CW
製造番号 Job No.: ——
図面番号 Dwg No.: OKS122973−B
適用規格/要領書 Standard/Procedure: KQ-SI3027-f
判定 Evaluation: ☑合格 Acceptable ☐不合格 Unacceptable

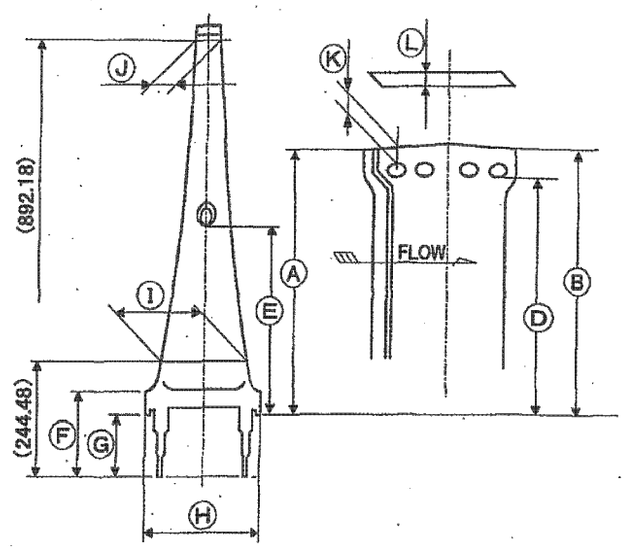

位置 Position		A	B		D	E (Suction)	E (Pressure)	F
図面寸法 Dwg.		790.30	791.70		776.29	400.75	402.12	168.28
公差 Tolerance		+0.20 −0.38	+0.20 −0.38		+0.13 −0.13	+0.13 −0.13	+0.13 −0.13	+0.20 −0.38
実測値 Act.	1	−0.06	−0.36		−0.03	+0.02	+0.05	+0.03
	2	−0.05	−0.37		−0.01	+0.02	+0.04	+0.19
Instrument No.		CMM1	CMM1		CMM1	CMM1	CMM1	CMM1

位置 Position		G	H	I	J	K	L	
図面寸法 Dwg.		138.11	254.00	165.76	45.35	7.63	11.64	
公差 Tolerance		+0.08 −0.08	+0.40 −0.40	+1.02 −0.38	+1.02 −0.38	+0.26 −0.13	+0.08 −0.08	
実測値 Act.	1	−0.08	+0.10	−0.12	+0.20	+0.12	0	
	2	+0.05	+0.07	−0.38	+0.84	+0.17	−0.01	
Instrument No.		CMM1	CMM1	CMM1	CMM1	CMM1	CMM1	

Model 1: S/No. ANE48
Model 2: S/No. ANE77

Reviewed by TOSHIBA Jun 16, 2010

検査者:[ダイケン] Inspected by: 遠藤
検査日付: Inspected date: 2010.6.5

発行 Issued by: Quality Control Staff
立会者 Witnessed by: ——

承認 Approved by: 木佐貫 2010-6-5
調査 Reviewed by: 工藤 2010-6-5
担当 Prepared by: 大川 2010-6-5

東芝ジーイータービンコンポーネンツ株式会社
Toshiba GE Turbine Components Co., Ltd.

IP7018035

品質記録
QUALITY RECORD

QR−K

PC-B5015-c
Unit : mm
ST No.

羽根有効部肉厚寸法検査
Airfoil Thickness Record

注文主 Customer: TSB
施設名 Plant: XUIN2
機器名 Item: Steam Turbine Bucket
部品名 Part: NN30"B L-0 BKT B/CW
製造番号 Job No.: ——
図面番号 Dwg No.: OKS122973-B
適用規格/要領書 Standard/Procedure: KQ-SI3027-f
判定 Evaluation: ☒合格 Acceptable ☐不合格 Unacceptable

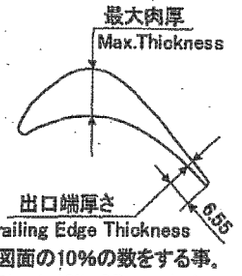

図面の10%の数をする事。
Check 10% of Dwg-total number
図面定数(88)
Quota
*研磨工程内において、羽根全数について計測がおこなわれ、基準値内に仕上げられていることを確認した。

有効長 Active Length	最大肉厚公差 Max. Thickness Tolerance	出口端厚公差 Trailing Edge Thickness Tol.
~~101.6以下~~	~~+0.25 -0.25~~	~~+10% -0.13~~
~~101.7~203.0~~	~~+0.38 -0.25~~	~~+10% -0.25~~
~~203.3~431.8~~	~~+0.51 -0.25~~	~~+10% -0.25~~
~~431.9~762.0~~	~~+0.76 -0.38~~	~~+10% -0.25~~
~~762.1以上~~	~~+0.76 -0.38~~	~~+20% -0.25~~
全ての最終段階	+0.76 −0.38	+0.25 −0.25

備考)Z−Z断面の最大肉厚は出口端より70mmの位置とする。

Section	K−K		H−H		R−R		Z−Z	
Section Height	244.48		396.88		663.58		892.18	
Check Point	Max.	Trail.Edge	Max.	Trail.Edge	Max.	Trail.Edge	Max.	Trail.Edge
Dwg.	20.95	3.39	16.43	2.72	9.52	2.59	5.70	1.54
Tolerance	上表参照							
Tol. Range	21.71 20.57	3.64 3.14	17.19 16.05	2.97 2.47	10.28 9.14	2.84 2.34	6.46 5.32	1.79 1.29
1. ANE 48	21.48	3.43	16.78	2.70	9.80	2.83	6.32	1.32
2. ANE 77	21.25	3.45	16.87	2.90	9.52	2.75	6.02	1.75
3. ANE 173	21.59	3.42	17.18	2.96	10.19	2.70	6.40	1.70
4. CEW 105	21.24	3.60	16.67	2.90	10.00	2.70	6.07	1.69
5. ANE 14	21.19	3.45	16.86	2.83	9.50	2.60	6.16	1.67
6. ANE 102	21.07	3.61	16.57	2.80	9.57	2.63	6.45	1.50
7. ANE 127	21.06	3.41	16.94	2.86	9.85	2.77	6.31	1.70
8. ANE 26	21.52	3.61	17.00	2.92	10.26	2.66	6.32	1.66
9. ANE 170	21.46	3.60	16.91	2.87	9.63	2.70	6.15	1.70

InstrumentNo. YB408,YB403,YE090,YE044

Reviewed by TOSHIBA
~~立会者~~ ~~Witnessed by~~ Jun. 16, 2010

検査者:[ダイケン] Inspected by 小栗
検査日付: Inspected date 2010-6-4

発行 Issued by: Quality Control Staff

承認 Approved by: 木佐貫 2010-6-4
調査 Reviewed by: 工藤 2010-6-4
担当 Prepared by: 大内 2010-6-4

東芝ジーイータービンコンポーネンツ株式会社
Toshiba GE Turbine Components Co., Ltd.

IP7018036

TGTC

品質記録
QUALITY RECORD

QR-K

磁粉探傷試験成績書
Magnetic Particle Inspection Record

PC-Z0201-02-a

単位 Unit mm

ST No	

注文主 Customer: TSB
施設名 Plant: XUIN2
機器名 Item: Steam Turbine Bucket
部品名 Part: NN30"B L-0 BKT B/CW
製造番号 Job No.:
図面番号 Drawing No.: OKS122973-B
適用規格/要領書 Standard/Procedure: KQ-SI3036-g

数量 Quantity: 88 Pieces
材質 Material: K11C77E-R4
試験時期 Examination stage: 機械加工研磨完了後 After Final Polishing
試験日付 Examined date: 2010. 6. 12

探傷条件 Examined Conditions	探傷装置 Equipment: Eishin Kagaku Co.,Ltd. TF-50	管理番号 CE0003	表面状態 Surface condition	機械加工及び研磨面 Machining&Polishing Surface
	磁化方法 Magnetization	Head Shot Method and Coil Method	磁粉 Magnetic particle	湿式蛍光磁粉 SY8000 A/1
	磁化電流/時間 Current/Duration	DC1200A 15秒 1回 DC16000AT/ sec. times	標準試験片 Standard T.P.	JIS Z2320-1 A1-30-100 円形
	ブラックライト Black light	L1000	管理番号 CE0003	

探傷範囲 Examined area: All Surface

判定 Evaluation: ☑合格 Acceptable / □不合格 Unacceptable

検査本数 Quantity	88Pieces
合格本数 Acceptable	88Pieces

Reviewed by TOSHIBA Jun. 16. 2010

検査者:[ダイケン] Inspected by: 遠藤
検査日付: Inspected date: 2010. 6. 12

発行 Issued by: 品質管理部 Quality Control Staff
~~立会者 Witnessed by~~

承認 Approved by: 木佐貫 2010-6-12
調査 Reviewed by: 工藤 2010-6-12
担当 Prepared by: 2010-6-12 天川

東芝ジーイータービンコンポーネンツ株式会社
Toshiba GE Turbine Components Co., Ltd.

IP7018037

IGIC

品質記録
QUALITY RECORD

QR－K

単羽根固有振動数計測記録
(Single Bucket Vibration Record)

PC-B5128-a

単位Unit:Hz

ST NO.	

注文主 Customer: TSB

施設名 Plant: XUIN2

機器名 Item: Steam Turbine Bucket

部品名 Part: NN30"B L-0 BKT B/CW

製造番号 Job No.:

図面番号 Drawing No.: OKS122973-B

適用標準／要領書 Standard/Procedure: KQ－SI5101－h

判定 Evaluation: ☒ 合格 Acceptable / ☐ 不合格 Unacceptable

使用計測器 InstrumentNo.: 4011H

許容振動数範囲[30"BKTL- 0 / 30"]
Tolerance

☐ 接線方向一次 1st Tangential ____Hz～ ____Hz
軸方向一次 1st Axial ____Hz～ ____Hz

■ 中間値に対するバラツキ6%以内
Criterion: Within 6% Variation To Medium Value

羽根番号 No.	S／No.	接線方向一次 1st Tangential	軸方向一次 1st Axial
1	ANE 26	55	110
2	ANE 127	54	108
3	ANE 102	54	108
4	CEW 113	54	108
5	CEW 70	54	108
6	ANE 181	54	108
7	ANE 197	56	110
8	CEW 15	55	109
9	CEW 11	55	110
10	ANE 137	55	110
11	ANE 153	55	110
12	ANE 187	55	110
13	CEW 38	55	110
14	ANE 11	55	109
15	ANE 21	54	109
16	ANE 115	53	109
17	ANE 173	56	111
18	CEW 103	55	109
19	ANE 170	54	109
20	CEW 49	55	110
21	ANE 157	54	110
22	CEW 50	56	112
23	CEW 14	53	108
24	ANE 14	53	108
25	CEW 66	54	108

	Min		Max		Diff.	
接線方向一次 1st Tangential	53	Hz～	56	Hz (	3 Hz	5.5 %)
軸方向一次 1st Axial	108	Hz～	112	Hz (	4 Hz	3.6 %)
チューニング Tuning	無			(	0 Piece)	

Reviewed by TOSHIBA
Jun. 10, 2010

検査者:[ダイケン] Inspected by: 金川
検査日付: Inspected date: 2010.6.7

発行 Issued by: Quality Control Staff
立会者 Witnessed by:

承認 Approved by: 本庄 2010-6-7
調査 Reviewed by: 工藤 2010-6-7
担当 Prepared by: 2010-6-7 大内

東芝ジーイータービンコンポーネンツ株式会社
Toshiba GE Turbine Components Co., Ltd.

IP7018038

MOMENT WEIGH CHARTING-BKTS PAGE 1/1

XUIN2 NN30" L-0

STAGE BT DWG# : 0KS122973

Measured Date: 2010-6-14

VANE SUPPORT B DISTANCE 12.3/8 "

RR= 23.625 " 88 NUMBER OF BUCKETS ON ROW

1lb= 453.592 g

MWT NO.	SERIAL NO.	MOMENT WEIGH	MWT NO.	SERIAL NO.	MOMENT WEIGH
1	CEW 38	1152.98	51	ANE 42	1139.66
2	ANE 11	1150.38	52	ANE 152	1123.16
3	ANE 21	1128.54	53	ANE 55	1118.47
4	ANE 115	1145.44	54	ANE 10	1148.51
5	ANE 173	1171.27	55	ANE 24	1129.28
6	CEW 105	1135.61	56	ANE 132	1131.63
7	ANE 170	1149.45	57	ANE 163	1133.02
8	CEW 49	1155.30	58	ANE 113	1140.30
9	ANE 157	1144.28	59	ANE 116	1131.84
10	CEW 50	1171.74	60	CEW 44	1161.20
11	CEW 14	1130.89	61	ANE 44	1131.15
12	ANE 14	1134.67	62	ANE 164	1148.06
13	ANE 26	1154.13	63	ANE 169	1132.07
14	ANE 127	1144.98	64	ANE 167	1152.98
15	ANE 102	1132.30	65	ANE 178	1157.69
16	CEW 113	1145.94	66	ANE 147	1133.73
17	CEW 70	1153.68	67	ANE 138	1158.14
18	ANE 181	1166.59	68	ANE 59	1147.11
19	ANE 197	1157.91	69	ANE 37	1149.23
20	CEW 15	1140.53	70	ANE 193	1137.95
21	CEW 11	1134.68	71	ANE 23	1119.42
22	ANE 137	1165.18	72	ANE 142	1143.83
23	ANE 153	1159.31	73	ANE 93	1125.26
24	ANE 187	1156.26	74	CEW 39	1123.62
25	ANE 191	1138.43	75	ANE 85	1125.97
26	ANE 16	1142.43	76	CEW 32	1159.31
27	CEW 22	1144.05	77	ANE 103	1154.87
28	CEW 7	1126.68	78	ANE 120	1130.45
29	CEW 65	1140.76	79	EZE 33	1134.90
30	ANE 160	1138.19	80	EZE 20	1151.10
31	ANE 48	1151.09	81	EZE 23	1150.17
32	CEW 17	1146.17	82	ANE 121	1130.66
33	CEW 84	1162.83	83	EZE 104	1124.09
34	ANE 15	1114.01	84	EZE 9	1167.53
35	ANE 77	1149.90	85	EZE 39	1123.62
36	CEW 66	1142.41	86	EZE 21	1158.62
37	ANE 108	1159.55	87	EZE 24	1156.50
38	CEW 59	1142.65	88	EZE 42	1137.95
39	CEW 77	1158.36	89		
40	CEW 115	1159.78	90		
41	ANE 91	1138.67	91		
42	ANE 151	1138.20	92		
43	ANE 106	1160.97	93		
44	ANE 52	1130.67	94		
45	ANE 139	1147.59	95		
46	ANE 146	1156.27	96		
47	ANE 125	1125.29	97		
48	CEW 101	1133.26	98		
49	ANE 3	1129.74	99		
50	ANE 5	1123.16	100		

MWT NO.	SERIAL NO.	MOMENT WEIGH	MWT NO.	SERIAL NO.	MOMENT WEIGH
1	CEW 38	13283698	51	ANE 42	13118743
2	ANE 11	13253800	52	ANE 152	12940221
3	ANE 21	13002220	53	ANE 55	12886129
4	ANE 115	13196900	54	ANE 10	13232284
5	ANE 173	13494493	55	ANE 24	13010688
6	CEW 105	13083574	56	ANE 132	13037820
7	ANE 170	13243129	57	ANE 163	13053763
8	CEW 49	13310485	58	ANE 113	13137710
9	ANE 157	13183506	59	ANE 116	13040197
10	CEW 50	13499894	60	CEW 44	13378403
11	CEW 14	13029223	61	ANE 44	13032290
12	ANE 14	13072773	62	ANE 164	13227014
13	ANE 26	13297048	63	ANE 169	13042875
14	ANE 127	13191629	64	ANE 167	13283784
15	ANE 102	13045511	65	ANE 178	13337963
16	CEW 113	13202646	66	ANE 147	13061972
17	CEW 70	13291777	67	ANE 138	13343148
18	ANE 181	13440574	68	ANE 59	13216169
19	ANE 197	13340555	69	ANE 37	13240537
20	CEW 15	13140302	70	ANE 193	13110620
21	CEW 11	13072859	71	ANE 23	12897060
22	ANE 137	13424329	72	ANE 142	13178365
23	ANE 153	13356671	73	ANE 93	12964373
24	ANE 187	13321588	74	CEW 39	12945449
25	ANE 191	13116064	75	ANE 85	12972538
26	ANE 16	13162163	76	CEW 32	13356671
27	CEW 22	13180871	77	ANE 103	13305560
28	CEW 7	12980747	78	ANE 120	13024125
29	CEW 65	13142980	79	EZE 33	13075452
30	ANE 160	13113299	80	EZE 20	13262052
31	ANE 48	13281966	81	EZE 23	13251424
32	CEW 17	13205238	82	ANE 121	13026630
33	CEW 84	13397240	83	EZE 104	12950893
34	ANE 15	12834759	84	EZE 9	13451418
35	ANE 77	13248313	85	EZE 39	12945535
36	CEW 66	13161991	86	EZE 21	13348721
37	ANE 108	13359393	87	EZE 24	13324267
38	CEW 59	13164712	88	EZE 42	13110577
39	CEW 77	13345697	89		
40	CEW 115	13362071	90		
41	ANE 91	13118829	91		
42	ANE 151	13113515	92		
43	ANE 106	13375810	93		
44	ANE 52	13026717	94		
45	ANE 139	13221656	95		
46	ANE 146	13321632	96		
47	ANE 125	12964718	97		
48	CEW 101	13056528	98		
49	ANE 3	13015959	99		
50	ANE 5	12940221	100		

Reviewed by
TOSHIBA

Jun. 15, 2010

Wuxi turbine Blade works inspection report for raw material

Supplier	Ben-xi Special steel Co. Ltd.				Delivery condition			Annealing					
Material	K11C77E-R4				Steel factory heat No.			D07096		Size		φ 180	
Surface condition	Finished the bar partly and no defect by vision.							Acceptance standard		PN-KS01161-b			
Commission unit	Inspector							Report No.		60591			
Chemical composition	C	Mn	Cr	Si	Ni	S	P	V	N	Mo	Fe		
Content (%)	0.13	0.78	11.98	0.2	2.82	0.006	0.017	0.32	0.023	1.76	Others		

Mechanical properties	Temperature (°C)		Specimen No.	Rm Mpa	Rp0.02MPa	A%	Z%	Akv			HB
	Quenching	Tempering									
	1020°C	565°C	1#	1170	810	19	67	99	101.5	85.5	350
			2#	1170	780	20	68	83.5	85.5	95.5	350

Sample No.	High power metallgraphic for raw material							
	Non-metal inclusion				δ-Fe (%)	Grain Size	Microstructure	Others
	A	B	C	D				
1#	0.5 0e	1.5 0e	0.5 0e	1.5 0e	Average<1.5%	6~5grade	Microstructure of tempered Martensite	
2#	0.5 0e	1.5 0e	0.50e	1.5 0e	Average<1.5%	6~5grade		

Sample No.	Low power metallgraphic for raw material				
	Normal porosity	Center porosity	Square segregation	Others	
1#	1.0	1.0	1.0		
2#	1.0	1.0	1.0		

Result:	Results requirements.				
Checker	魏胜根	RE-Checker	张雪彬	Date	2006-9-21

L-0 B/CCW (G side)

Reviewed by H-Kawaba
TGTC Apr-28-2010

Reviewed by TOSHIBA
J. Chiose
May. 10, 2010

2006.12.01

28/53

IP7018040

Wuxi turbine Blade works inspection report for raw material

Supplier	Ben-xi Special steel Co. Ltd.				Delivery condition			Annealing					
Material	K11C77E-R4				Steel factory heat No.			D07082		Size		φ 180	
Surface condition	Finished the bar partly and no defect by vision.							Acceptance standard		PN-KS01161-b			
Commission unit	Inspector							Report No.		60229			
Chemical composition	C	Mn	Cr	Si	Ni	S	P	V	N	Mo	Fe		
Content (%)	0.13	0.82	12.30	0.22	2.69	0.007	0.012	0.34	0.022	1.79	Others		

Mechanical properties	Temperature (°C)		Specimen No.	Rm Mpa	Rp0.02MPa	A%	Z%	Akv			HB
	Quenching	Tempering									
	1020°C	570°C	1#	1200	850	18.0	64.0	150	125	125	362
			2#	1200	840	19.0	65.0	156	118	125	360

Sample No.	High power metallgraphic for raw material							
	Non-metal inclusion				δ-Fe (%)	Grain Size	Microstructure	Others
	A	B	C	D				
1#	0.5 0e	1.0 0e	0.5 0e	1.5 0e	Average<1.5%	6grade	Microstructure of tempered Martensite	
2#	0.5 0e	1.0 0e	0.50e	1.5 0e	Average<1.5%	6grade		

Sample No.	Low power metallgraphic for raw material			
	Normal porosity	Center porosity	Square segregation	Others
1#	1.0	1.0	1.0	
2#	1.0	1.0	1.0	

Result:	Results requirements。				
Checker	魏胜根	RE-Checker	张雪彬	Date	2006.04.21

L-0 B/CCW (G side)

Reviewed by U. Kawabe
TGTC APR. 28. 2010

Reviewed by TOSHIBA
M. Ishiose
MAY 10, 2010

2006.12.01

-24/43

IP7018041

Wuxi turbine Blade works inspection report for raw material

Supplier	Ben-xi Special steel Co. Ltd.				Delivery condition			Annealing					
Material	K11C77E-R4				Steel factory heat No.			D07081		Size		φ 190	
Surface condition	Finished the bar partly and no defect by vision.							Acceptance standard		PN-KS01161-b			
Commission unit	Inspector							Report No.		60344			
Chemical composition	C	Mn	Cr	Si	Ni	S	P	V	N	Mo	Fe		
Content (%)	0.14	0.74	12.32	0.20	2.70	0.004	0.019	0.38	0.026	1.73	Others		

Mechanical properties	Temperature (°C)		Specimen No.	Rm (Mpa)	Rp0.02 (Mpa)	A (%)	Z (%)	Akv (J)			HB
	Quenching	Tempering									
	1020°C	575°C	1#	1200	805	20.0	66.0	85.5	75.5	95	360
			2#	1195	795	20.5	67.5	100.5	95	85.5	358

Sample No.	High power metallgraphic for raw material							
	Non-metal inclusion				δ-Fe (%)	Grain Size	Microstructure	Others
	A	B	C	D				
1#	0.5 0e	1.0 0e	0.5 0e	1.5 0e	Average<1.5%	6grade	Microstructure of tempered Martensite	
2#	0.5 0e	1.0 0e	0.5 0e	1.5 0e	Average<1.5%	6grade		

Sample No.	Low power metallgraphic for raw material				
	Normal porosity	Center porosity	Square segregation	Others	
1#	1.0	1.0	1.0		
2#	1.0	1.0	1.0		

Result:	Results requirements。				
Checker	魏胜根	RE-Checker	张雪彬	Date	2006.04.22

L-0 B/CCW (G side)

Reviewed by H. Kawabe
TGTC Apr. 28. 2010

Reviewed by TOSHIBA
Y. Hirose
May. 10, 2010

2006.12.02

30/53

IP7018042

Wuxi turbine Blade works inspection report for raw material

Supplier	Ben-xi Special steel Co. Ltd.				Delivery condition			Annealing					
Material	K11C77E-R4				Steel factory heat No.			D10035		Size		φ 180	
Surface condition	Finished the bar partly and no defect by vision.							Acceptance standard		PN-KS01161-b			
Commission unit	Inspector							Report No.		60590			
Chemical composition	C	Mn	Cr	Si	Ni	S	P	V	N	Mo	Fe		
Content (%)	0.14	0.85	11.99	0.20	2.75	0.003	0.013	0.34	0.025	1.71	Others		

Mechanical properties	Temperature (°C)		Specimen No.	Rm (Mpa)	Rp0.02 (Mpa)	A (%)	Z (%)	Akv (J)			HB
	Quenching	Tempering									
	1020°C	565°C	1#	1150	820	20	67.5	102.5	98.5	89.5	345
			2#	1140	805	20	67.5	96.5	101.5	88.5	340

Sample No.	High power metallgraphic for raw material							
	Non-metal inclusion				δ-Fe (%)	Grain Size	Microstructure	Others
	A	B	C	D				
1#	0.5 0e	1.0 0e	0.5 0e	1.5 0e	Average<1.5%	6~5grade	Microstructure of tempered Martensite	
2#	0.5 0e	1.0 0e	0.50e	1.5 0e	Average<1.5%	6~5grade		

Sample No.	Low power metallgraphic for raw material			
	Normal porosity	Center porosity	Square segregation	Others
1#	1.0	1.0	1.0	
2#	1.0	1.0	1.0	

Result:	Results requirements。					
Checker	魏胜根	RE-Checker	张雪彬	Date	2006.09.11	

L-0 B/CCW (G side)

Reviewed by H. Kanabe TGTC APR. 9 2010

Reviewed by TOSHIBA Y. Ishiwse Apr. 25, 2010

2006.11.23 质量证明专用章

31/63

IP7018043

Wuxi turbine Blade works inspection report for raw material

Supplier	Ben-xi Special steel Co. Ltd.				Delivery condition			Annealing				
Material	K11C77E-R4				Steel factory heat No.			D07081		Size		ϕ 190
Surface condition	Finished the bar partly and no defect by vision.							Acceptance standard		PN-KS01161-b		
Commission unit	Inspector							Report No.		60344		
Chemical composition	C	Mn	Cr	Si	Ni	S	P	V	N	Mo	Fe	
Content (%)	0.14	0.74	12.32	0.20	2.70	0.004	0.019	0.38	0.026	1.73	Others	

Mechanical properties	Temperature (°C)		Specimen No.	Rm (Mpa)	Rp0.02 (Mpa)	A (%)	Z (%)	Akv (J)			HB
	Quenching	Tempering									
	1020°C	575°C	1#	1200	805	20.0	66.0	85.5	75.5	95	360
			2#	1195	795	20.5	67.5	100.5	95	85.5	358

Sample No.	High power metallgraphic for raw material							
	Non-metal inclusion				δ-Fe (%)	Grain Size	Microstructure	Others
	A	B	C	D				
1#	0.5 0e	1.0 0e	0.5 0e	1.5 0e	Average<1.5%	6grade	Microstructure of tempered Martensite	
2#	0.5 0e	1.0 0e	0.5 0e	1.5 0e	Average<1.5%	6grade		

Sample No.	Low power metallgraphic for raw material				
	Normal porosity	Center porosity	Square segregation	Others	
1#	1.0	1.0	1.0		
2#	1.0	1.0	1.0		

Result:	Results requirements。				
Checker	魏胜根	RE-Checker	张雪彬	Date	2006.04.22

L-0 B/CCW (G side)

Reviewed by H. Kanabe TGTC APR. 9. 2010

Reviewed by TOSHIBA Y. Ichinose Apr. 25, 2010

2006.11.23

IP7018044

TGTC
品質記録
QUALITY RECORD

QR−K

PC-B5010-c
Unit : mm
ST No.

完成品寸法検査
Final Inspection Record

注文主
Customer TSB
施設名
Plant XUIN2
機器名
Item Steam Turbine Bucket
部品名
Part NN30"B L-0 BKT B/CCW
製造番号
Job No. ——
図面番号
Dwg No. OKS122973−B
適用規格/要領書
Standard/Procedure KQ-SI3027-9
判定 ☒合格 Acceptable
Evaluation ☐不合格 Unacceptable

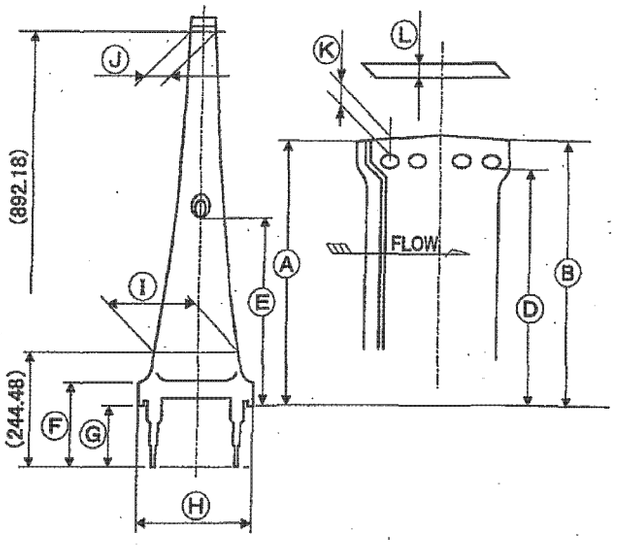

位置 Position		A	B		D	E (Suction)	E (Pressure)	F
図面寸法 Dwg.		790.30	791.70		776.29	400.75	402.12	168.28
公差 Tolerance		+0.20 −0.38	+0.20 −0.38		+0.13 −0.13	+0.13 −0.13	+0.13 −0.13	+0.20 −0.38
実測値 Act.	1	+0.05	+0.13		+0.03	+0.02	+0.03	−0.10
	2	+0.03	+0.12		+0.05	+0.02	+0.02	−0.06
Instrument No.		CMM1	CMM1		CMM1	CMM1	CMM1	CMM1

位置 Position		G	H	I	J	K	L	
図面寸法 Dwg.		138.11	254.00	165.76	45.35	7.63	11.64	
公差 Tolerance		+0.08 −0.08	+0.40 −0.40	+1.02 −0.38	+1.02 −0.38	+0.26 −0.13	+0.08 −0.08	
実測値 Act.	1	+0.05	+0.03	−0.04	−0.06	+0.09	+0.03	
	2	+0.04	+0.07	+0.12	+0.27	+0.05	+0.02	
Instrument No.		CMM1	CMM1	CMM1	CMM1	CMM1	CMM1	

Model 1: S/No. CNC 59
Model 2: S/No. ANT 19

Reviewed by TOSHIBA J. Hirose Jul. 20, 2010

検査者:[ダイケン] Inspected by 小栗
検査日付: Inspected date 2010-7-10

発行 Issued by Quality Control Staff
立会者 Witnessed by ——
承認 Approved by 木佐貫 2010-7-12
調査 Reviewed by 工藤 2010-7-12
担当 Prepared by 天内 2010-7-12

東芝ジーイータービンコンポーネンツ株式会社
Toshiba GE Turbine Components Co., Ltd.

IP7018045

TGTC
品質記録
QUALITY RECORD

QR−K

PC−B5015−c
Unit : mm
ST No.

羽根有効部肉厚寸法検査
Airfoil Thickness Record

注文主 Customer: TSB
施設名 Plant: XUIN2
機器名 Item: Steam Turbine Bucket
部品名 Part: NN30"B L-0 BKT B/CCW
製造番号 Job No.: ——
図面番号 Dwg No.: OKS122973−B
適用規格/要領書 Standard/Procedure: KQ-SI3027-f
判定 Evaluation: ☑合格 Acceptable ☐不合格 Unacceptable

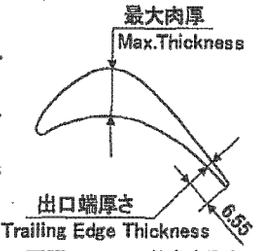

図面の10%の数をする事。
Check 10% of Dwg-total number
図面定数(88)
Quota
*研磨工程内において、羽根全数について計測がおこなわれ、基準値内に仕上げられていることを確認した。

有効長 Active Length	最大肉厚公差 Max. Thickness Tolerance	出口端厚公差 Trailing Edge Thickness Tol.
~~101.6以下~~	~~+0.25 −0.25~~	~~+10% −0.13~~
~~101.7~203.6~~	~~+0.38 −0.25~~	~~+10% −0.25~~
~~203.3~431.9~~	~~+0.51 −0.25~~	~~+10% −0.25~~
~~431.9~762.0~~	~~+0.76 −0.38~~	~~+10% −0.25~~
~~762.1以上~~	~~+0.76 −0.38~~	~~+20% −0.25~~
全ての最終段階	+0.76 −0.38	+0.25 −0.25

備考)Z−Z断面の最大肉厚は出口端より70mmの位置とする。

Section	K−K		H−H		R−R		Z−Z	
Section Height	244.48		396.88		663.58		892.18	
Check Point	Max.	Trail.Edge	Max.	Trail.Edge	Max.	Trail.Edge	Max.	Trail.Edge
Dwg.	20.95	3.39	16.43	2.72	9.52	2.59	5.70	1.54
Tolerance	上表参照							
Tol. Range	21.71 20.57	3.64 3.14	17.19 16.05	2.97 2.47	10.28 9.14	2.84 2.34	6.46 5.32	1.79 1.29
1. CNC 59	21.57	3.55	17.08	2.92	10.05	2.82	6.29	1.66
2. ANT 19	21.61	3.52	16.97	2.92	10.17	2.78	6.13	1.79
3. APA 51	21.71	3.45	17.14	2.73	10.09	2.83	6.13	1.68
4. ANT 52	21.71	3.14	16.69	2.92	9.51	2.67	6.30	1.71
5. ANT 93	21.70	3.45	16.71	2.90	9.64	2.58	6.13	1.72
6. ANT 12	21.43	3.38	17.18	2.75	10.15	2.70	6.46	1.73
7. APA 12	21.41	3.19	16.87	2.93	9.82	2.55	6.30	1.56
8. ANT 32	21.24	3.23	16.93	2.90	9.85	2.78	6.28	1.74
9. ANT 60	21.61	3.43	16.81	2.94	10.14	2.77	6.44	1.71
InstrumentNo.	YB403,YB408,YE089,YE091,YE044							

Reviewed by TOSHIBA J. Hirose Jul. 20, 2010

検査者:[ダイケン] Inspected by 小栗
検査日付: Inspected date 2010-7-10

発行 Issued by Quality Control Staff
~~立会者~~ ~~Witnessed by~~

承認 Approved by 木佐貫 2010-7-12
調査 Reviewed by 工藤 2010-7-12
担当 Prepared by 天内 2010-7-12

東芝ジーイータービンコンポーネンツ株式会社
Toshiba GE Turbine Components Co., Ltd.

IP7018046

TGTC
品質記録
QUALITY RECORD

QR-K

磁粉探傷試験成績書
Magnetic Particle Inspection Record

PC-Z0201-02-a
単位 Unit mm

ST No	

注文主 Customer: TSB
施設名 Plant: XUIN2
機器名 Item: Steam Turbine Bucket
部品名 Part: NN30"B L-0 BKT B/CCW
製造番号 Job No.:
図面番号 Drawing No.: OKS122973-B
適用規格/要領書 Standard/Procedure: KQ-SI3036-9

数量 Quantity	88 Pieces	材質 Material	K11C77E-R4
試験時期 Examination stage	機械加工研磨完了後 After Final Polishing	試験日付 Examined date	2010-7-17

探傷条件 Examined Conditions	探傷装置 Equipment	Bishin Kagaku Co., Ltd. TF-50	管理番号 CE0003	表面状態 Surface condition: 機械加工及び研磨面 Machining&Polishing Surface
	磁化方法 Magnetization	Head Shot Method and Coil Method		磁粉 Magnetic particle: 湿式蛍光磁粉 SY8000 A/1
	磁化電流/時間 Current/Duration	DC1200A 15秒 1回 DC16000AT/ sec. times		標準試験片 Standard T.P.: JIS Z2320-1 A1-30-100 円形
	ブラックライト Black light	L1000	管理番号 CE0003	

探傷範囲 Examined area: All Surface

判定 Evaluation: ☑合格 Acceptable / □不合格 Unacceptable

検査本数 Quantity	88Pieces
合格本数 Acceptable	88Pieces

Reviewed by TOSHIBA Jul. 25, 2010

検査者:[ダイケン] Inspected by: 小案
検査日付: Inspected date: 2010-7-17

発行 Issued by: 品質管理部 Quality Control Staff
~~立会者 Witnessed by~~
承認 Approved by: 木佐貫 2010-7-20
調査 Reviewed by: 工藤 2010-7-20
担当 Prepared by: 天内 2010-7-20.

東芝ジーイータービンコンポーネンツ株式会社
Toshiba GE Turbine Components Co., Ltd.

-25/53

IP7018047

TGTC

品質記録
QUALITY RECORD

QR−K

単羽根固有振動数計測記録
(Single Bucket Vibration Record)

PC-B5128-a

単位Unit:Hz

ST NO.	

注文主 Customer: TSB
施設名 Plant: XUIN2
機器名 Item: Steam Turbine Bucket
部品名 Part: NN30"B L-0 BKT B/CCW
製造番号 Job No.:
図面番号 Drawing No.: OKS122973-B
適用標準／要領書 Standard/Procedure: KQ−SI5101-h
判定 Evaluation: ☑合格 Acceptable ☐不合格 Unacceptable

使用計測器 InstrumentNo.: 4011H

許容振動数範囲[30 "BKT L.- 0 / 30 "]
Tolerance
☐ 接線方向一次 1st Tangential ____Hz～____Hz
軸方向一次 1st Axial ____Hz～____Hz
■ 中間値に対するバラツキ６％以内 Within 6% Variation To Medium Value
Criterion

羽根番号 No.	S／No.	接線方向一次 1st Tangential	軸方向一次 1st Axial
1	APA 16	55	109
2	CEX 1	54	108
3	ANT 32	54	108
4	APA 51	55	110
5	ANT 147	55	110
6	ANT 12	55	110
7	ANT 60	54	109
8	APA 12	55	109
9	ANT 52	53	108
10	ANT 93	53	109
11	ANT 97	55	109
12	ANT 43	55	108
13	ANT 117	54	108
14	ANT 41	56	108
15	ANT 70	55	108
16	ANT 101	54	108
17	ANT 128	54	108
18	ANT 42	55	108
19	ANT 68	55	109
20	ANT 55	55	110
21	ANT 96	55	109
22	ANT 150	56	109
23	ANT 9	53	108
24	ANT 146	56	108
25	ANT 47	54	107

	Min		Max		Diff.		
接線方向一次 1st Tangential	53	Hz～	56	Hz (	3	Hz	5.5 %)
軸方向一次 1st Axial	107	Hz～	110	Hz (	3	Hz	2.8 %)
チューニング Tuning	無			(	0 Piece)		

Reviewed by TOSHIBA Jul. 20, 2010

検査者:[ダイケン] Inspected by 金川
検査日付: Inspected date 2010. 7. 15

発行 Issued by Quality Control Staff
立会者 Witnessed by

承認 Approved by 本佐貫 2010-7-16
調査 Reviewed by 工藤 2010-7-16
担当 Prepared by 天内 2010-7-16

東芝ジーイータービンコンポーネンツ株式会社
Toshiba GE Turbine Components Co., Ltd.

IP7018048

MOMENT WEIGH CHARTING-BKTS PAGE 1/1

XUIN2 NN30"L-0

STAGE BG DWG# : OKS122973

Measured Date: 2010.7.19 [illegible]

VANE SUPPORT B DISTANCE 12 3/8 "

RR= 23.625 " 88 NUMBER OF BUCKETS ON ROW

1lb= 453.592 g

MWT NO.	SERIAL NO.	MOMENT WEIGH	MWT NO.	SERIAL NO.	MOMENT WEIGH
1	APA 16	1155.09	51	ANT 105	1117.52
2	CEX 1	1140.78	52	APA 68	1155.09
3	ANT 32	1151.10	53	ANT 172	1155.31
4	APA 51	1156.96	54	ANT 39	1122.69
5	ANT 147	1157.66	55	CEX 13	1142.43
6	ANT 12	1163.06	56	APA 72	1147.10
7	ANT 60	1155.55	57	ANT 181	1135.83
8	APA 12	1151.34	58	ANT 212	1129.72
9	ANT 52	1128.57	59	APA 40	1157.44
10	ANT 93	1133.73	60	APA 70	1130.45
11	ANT 9	1124.59	61	ANT 34	1138.18
12	ANT 146	1154.39	62	APA 83	1139.13
13	ANT 97	1145.01	63	APA 10	1137.73
14	ANT 43	1150.38	64	CEX 29	1131.85
15	ANT 117	1143.82	65	ANT 175	1128.79
16	ANT 41	1151.34	66	APA 76	1150.63
17	ANT 70	1156.27	67	APA 20	1150.64
18	ANT 101	1136.08	68	ANT 10	1147.82
19	ANT 128	1145.94	69	APA 1	1147.34
20	ANT 42	1151.10	70	ANT 100	1124.57
21	ANT 68	1151.81	71	ANT 116	1137.48
22	ANT 55	1146.88	72	ANT 127	1124.32
23	ANT 96	1159.07	73	ANT 91	1142.42
24	ANT 150	1148.49	74	ANT 133	1154.84
25	ANT 47	1139.58	75	APA 56	1148.04
26	ANT 110	1152.75	76	ANT 8	1151.57
27	ANT 148	1148.29	77	ANT 141	1143.84
28	ANT 193	1136.30	78	ANT 57	1145.70
29	ANT 115	1130.21	79	ANT 126	1151.57
30	ANT 37	1147.56	80	APA 19	1164.46
31	CNC 59	1156.49	81	ANT 145	1118.46
32	ANT 19	1159.76	82	ANT 138	1134.65
33	ANT 124	1151.33	83	ANT 186	1126.44
34	ANT 16	1162.35	84	ANT 163	1131.12
35	ANT 67	1156.73	85	ANT 164	1112.12
36	ANT 121	1144.55	86	ANT 213	1170.10
37	CEX 4	1156.26	87	ANT 183	1113.54
38	ANT 21	1138.19	88	ANT 54	1144.52
39	ANT 188	1141.94	89		
40	ANT 51	1135.13	90		
41	ANT 81	1148.03	91		
42	ANT 31	1160.47	92		
43	ANT 71	1124.80	93		
44	APA 62	1154.84	94		
45	APA 79	1159.30	95		
46	ANT 28	1153.44	96		
47	ANT 139	1150.14	97		
48	APA 4	1145.22	98		
49	ANT 165	1136.30	99		
50	ANT 211	1128.10	100		

MWT NO.	SERIAL NO.	MOMENT WEIGH	MWT NO.	SERIAL NO.	MOMENT WEIGH
1	APA 16	13308065	51	ANT 105	12875198
2	CEX 1	13143153	52	APA 68	13308022
3	ANT 32	13262096	53	ANT 172	13310614
4	APA 51	13329581	54	ANT 39	12934734
5	ANT 147	13337661	55	CEX 13	13162163
6	ANT 12	13399875	56	APA 72	13215953
7	ANT 60	13313336	57	ANT 181	13086166
8	APA 12	13264818	58	ANT 212	13015743
9	ANT 52	13002565	59	APA 40	13335112
10	ANT 93	13062015	60	APA 70	13024125
11	ANT 9	12956639	61	ANT 34	13113212
12	ANT 146	13299943	62	APA 83	13124230
13	ANT 97	13191888	63	APA 10	13108028
14	ANT 43	13253844	64	CEX 29	13040326
15	ANT 117	13178235	65	ANT 175	13005071
16	ANT 41	13264861	66	APA 76	13256695
17	ANT 70	13321632	67	APA 20	13256825
18	ANT 101	13089018	68	ANT 10	13224248
19	ANT 128	13202689	69	APA 1	13218761
20	ANT 42	13262096	70	ANT 100	12956466
21	ANT 68	13270218	71	ANT 116	13105220
22	ANT 55	13213490	72	ANT 127	12953528
23	ANT 96	13353949	73	ANT 91	13162077
24	ANT 150	13232025	74	ANT 133	13305214
25	ANT 47	13129328	75	APA 56	13226841
26	ANT 110	13281063	76	ANT 8	13267496
27	ANT 148	13229692	77	ANT 141	13178495
28	ANT 193	13091610	78	ANT 57	13199881
29	ANT 115	13021359	79	ANT 126	13267453
30	ANT 37	13221354	80	APA 19	13416034
31	CNC 59	13324138	81	ANT 145	12885999
32	ANT 19	13361898	82	ANT 138	13072557
33	ANT 124	13264731	83	ANT 186	12977982
34	ANT 16	13391753	84	ANT 163	13031858
35	ANT 67	13326903	85	ANT 164	12813027
36	ANT 121	13186660	86	ANT 213	13480970
37	CEX 4	13321588	87	ANT 183	12829358
38	ANT 21	13113299	88	ANT 54	13186315
39	ANT 188	13156547	89		
40	ANT 51	13078087	90		
41	ANT 81	13226754	91		
42	ANT 31	13370021	92		
43	ANT 71	12959058	93		
44	APA 62	13305214	94		
45	APA 79	13356584	95		
46	ANT 28	13289099	96		
47	ANT 139	13251078	97		
48	APA 4	13194351	98		
49	ANT 165	13091567	99		
50	ANT 211	12997122	100		

Reviewed by
TOSHIBA
J. Hirose
Jul. 25, 2010

Wuxi Turbine Blade Co.,Ltd. inspection report for raw material

Supplier	BAOSHAN IRON & STEEL CO.,LTD				Delivery Condition			Annealing							
Material	K11C77E-R4				Steel Factory Heat No.			973D0035		Size	φ180		Rep. No.	0901000592	
Surface Condition	No Defect							Standard		PN-KS01161-c					
Chem. Composition	C	Mn	Cr	Si	Ni	S	P	V	Mo	N	Cu	Al	Nb	Sn	CE
Requirement	0.10-0.17	0.65-1.05	11.25-12.75	0.10-0.35	2.25-3.25	≤0.015	≤0.020	0.25-0.40	1.50-2.00	0.020-0.045	–	–	–	–	≤9.0
Content (%)	0.13	0.79	11.62	0.19	2.70	0.002	0.015	0.31	1.69	0.031	0.06	0.020	0.010	0.010	4.4
Content of WTB (%)	0.12	0.78	11.72	0.17	2.72	0.001	0.020	0.31	1.66	0.022	0.06	0.022	0.003	0.004	4.9

Heat-Treat Condition				Mechanical Property								
	Quenching	Tempering	Tempering	Specimen No.	Rm (Mpa) ≥1110	Rp0.02 (Mpa) ≥765	A (%) ≥13	Z (%) ≥30	Akv (J) ≥54			HB 331~375
Temp.	1020℃	565℃	565℃									
				1#	1140	820	19.0	76.5	193	198	206	356
				2#	1140	835	17.5	76.5	212	205	204	354

Metallographic Microstructure of Raw Material

Sample No.	Non-metal inclusion A	B	C	D	δ-Fe (%) ≤1.0%	Microstructure (Uniform tempered martensite)	Grain Size Better than Grade 4	Remark:
1#	0, 0.5e	0, 0.5e	0, 0.5e	0, 1.5e	<0.5%	Uniform tempered martensite	5grade	
2#	0, 0.5e	0, 0.5e	0, 0.5e	0, 1.5e	<0.5%		5grade	

Sample No.	Metallographic Macrostructure of Raw Material: Normal porosity	Center porosity	Square segregation	Others
1#	1.0	1.0	1.0	–
2#	1.0	1.0	1.0	–

Surface inspection

无锡透平叶片有限公司 质保专用章 2010.3.11 Accepted Wuxi Turbine Blade Co., Ltd. Quality Assurance Department

Result:	Results Meet With Requirements				
Checker	李敏捷	Review	魏胜根	Date	2009.10.28

L-0 C/CW (T side)

Reviewed by TGTC MAR. 26. '10 J. Osuna

Reviewed by TOSHIBA Apr. 25, 2010

33/53

IP7018050

Wuxi turbine Blade works inspection report for raw material

Supplier		Ben-xi Special steel Co. Ltd.				Delivery condition			Annealing					
Material		K11C77E-R4				Steel factory heat No.			D07081		Size		φ 190	
Surface condition		Finished the bar partly and no defect by vision.							Acceptance standard		PN-KS01161-b			
Commission unit		Inspector							Report No.		60344			
Chemical composition		C	Mn	Cr	Si	Ni	S	P	V	N	Mo	Fe		
Content (%)		0.14	0.74	12.32	0.20	2.70	0.004	0.019	0.38	0.026	1.73	Others		
Mechanical properties	Temperature (°C)		Specimen No.		Rm (Mpa)	Rp0.02 (Mpa)	A (%)	Z (%)	Akv (J)			HB		
	Quenching	Tempering												
	1020°C	575°C	1#		1200	805	20.0	66.0	85.5	75.5	95	360		
			2#		1195	795	20.5	67.5	100.5	95	85.5	358		
Sample No.	High power metallgraphic for raw material													
	Non-metal inclusion				δ-Fe (%)		Grain Size		Microstructure			Others		
	A	B	C	D										
1#	0.5 0e	1.0 0e	0.5 0e	1.5 0e	Average<1.5%		6grade		Microstructure of tempered Martensite					
2#	0.5 0e	1.0 0e	0.5 0e	1.5 0e	Average<1.5%		6grade							
Sample No.	Low power metallgraphic for raw material													
	Normal porosity		Center porosity				Square segregation		Others					
1#	1.0		1.0				1.0							
2#	1.0		1.0				1.0							
Result:	Results requirements。													
Checker	魏胜根		RE-Checker				张雪彬			Date		2006.04.22		

39/53

L-0 C/CW (T side)

Reviewed by H. Kawabe TGTC APR.16 2010

Reviewed by TOSHIBA

G. Ichiroo Apr. 25, 2010

2006.12.01 质量证明专用章

IP7018051

Wuxi turbine Blade works inspection report for raw material

Supplier	Ben-xi Special steel Co. Ltd.				Delivery condition			Annealing				
Material	K11C77E-R4				Steel factory heat No.			D10035		Size		φ 180
Surface condition	Finished the bar partly and no defect by vision.							Acceptance standard		FN-KS01161-b		
Commission unit	Inspector							Report No.		60590		
Chemical composition	C	Mn	Cr	Si	Ni	S	P	V	N	Mo	Fe	
Content (%)	0.14	0.85	11.99	0.20	2.75	0.003	0.013	0.34	0.025	1.71	Others	

Mechanical properties	Temperature (°C)		Specimen No.	Rm (Mpa)	Rp0.02 (Mpa)	A (%)	Z (%)	Akv (J)			HB
	Quenching	Tempering									
	1020°C	565°C	1#	1150	820	20	67.5	102.5	98.5	89.5	345
			2#	1140	805	20	67.5	96.5	101.5	88.5	340

Sample No.	High power metallgraphic for raw material							
	Non-metal inclusion				δ-Fe (%)	Grain Size	Microstructure	Others
	A	B	C	D				
1#	0.5 0e	1.0 0e	0.5 0e	1.5 0e	Average<1.5%	6~5grade	Microstructure of tempered Martensite	
2#	0.5 0e	1.0 0e	0.50e	1.5 0e	Average<1.5%	6~5grade		

Sample No.	Low power metallgraphic for raw material				
	Normal porosity	Center porosity	Square segregation	Others	
1#	1.0	1.0	1.0		
2#	1.0	1.0	1.0		

Result:	Results requirements。				
Checker	魏胜根	RE-Checker	张雪彬	Date	2006.09.11

无锡透平叶片有限公司
质保专用章
2010 5. 24
Wuxi Turbine Blade Co., Ltd.
Quality Assurance Department

L-0 C/CW (Tside)

Reviewed by TOSHIBA
Y. Hirose
Jun. 10, 2010

Reviewed by TGTC May. 27 '10
K. Osuchi

401/50

IP7018052

品質記録
QUALITY RECORD

QR−K

PC-B5010
Unit : mm

完成品寸法検査
Final Inspection Record

注文主
Customer TSB
施設名
Plant XUIN2
機器名
Item Steam Turbine Bucket
部品名
Part NN30"B L-0 BKT C/CW
製造番号
Job No. ——
図面番号
Dwg No. OKS122973−B
適用規格/要領書
Standard/Procedure KQ-SI3027-f
判定 ☑合格 Acceptable
Evaluation ☐不合格 Unacceptable

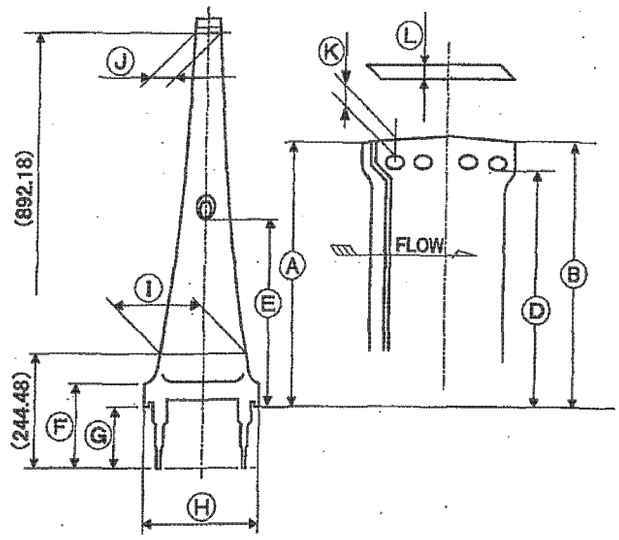

位置 Position		A	B		D	E (Suction)	E (Pressure)	F
図面寸法 Dwg.		790.30	791.70		776.29	400.75	402.12	168.28
公差 Tolerance		+0.20 −0.38	+0.20 −0.38		+0.13 −0.13	+0.13 −0.13	+0.13 −0.13	+0.20 −0.38
実測値 Act.	1	−0.06	+0.11		−0.10	−0.01	−0.01	−0.10
	2	−0.01	+0.17		−0.09	−0.02	+0.01	+0.09
Instrument No.		CMM1	CMM1		CMM1	CMM1	CMM1	CMM1

位置 Position		G	H	I	J	K	L
図面寸法 Dwg.		138.11	254.00	165.76	45.35	7.63	11.64
公差 Tolerance		+0.08 −0.08	+0.40 −0.40	+1.02 −0.38	+1.02 −0.38	+0.26 −0.13	+0.08 −0.08
実測値 Act.	1	−0.06	+0.08	−0.37	−0.07	−0.13	+0.03
	2	+0.05	+0.08	−0.35	−0.36	−0.12	+0.01
Instrument No.		CMM1	CMM1	CMM1	CMM1	CMM1	CMM1

Model 1: S/No. EZE 4
Model 2: S/No. EZE 6

Reviewed by TOSHIBA
Y. Ichinose JUN. 20, 2010

検査者:[ダイケン] Inspected by 遠藤
検査日付: Inspected date 2010.6.16

発行 Issued by Quality Control Staff
立会者 Witnessed by ——
承認 Approved by 木佐貫 2010.6.16
調査 Reviewed by 工藤 2010-6-16
担当 Prepared by 大内 2010-6-16

東芝ジーイータービンコンポーネンツ株式会社
Toshiba GE Turbine Components Co., Ltd.

IP7018053

IGIC
品質記録
QUALITY RECORD

QR−K

PC-B5015
Unit : mm

羽根有効部肉厚寸法検査
Airfoil Thickness Record

注文主
Customer TSB
施設名
Plant XUIN2
機器名
Item Steam Turbine Bucket
部品名
Part NN30"B L-0 BKT C/CW
製造番号
Job No.
図面番号
Dwg No. OKS122973-B
適用規格/要領書
Standard/Procedure KQ-SI3027-f
判定 ☑合格 Acceptable
Evaluation □不合格 Unacceptable

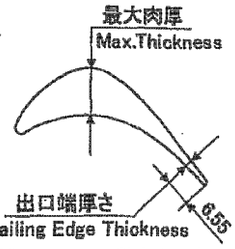

図面の10%の数をする事。
Check 10% of Dwg-total number
図面定数(88)
Quota
*研磨工程内において、羽根全数について計測がおこなわれ、基準値内に仕上げられていることを確認した。

有効長 Active Length	最大肉厚公差 Max. Thickness Tolerance	出口端厚公差 Trailing Edge Thickness Tol.
101.6以下	+0.25 -0.25	+10% -0.13
101.7～203.0	+0.38 -0.25	+10% -0.25
203.3～431.8	+0.51 -0.25	+10% -0.25
431.9～762.0	+0.76 -0.38	+10% -0.25
762.1以上	+0.76 -0.38	+20% -0.25
全ての最終段階	+0.76 −0.38	+0.25 −0.25

備考)Z−Z断面の最大肉厚は出口端より70mmの位置とする。

Section	K−K		H−H		R−R		Z−Z	
Section Height	244.48		396.88		663.58		892.18	
Check Point	Max.	Trail.Edge	Max.	Trail.Edge	Max.	Trail.Edge	Max.	Trail.Edge
Dwg.	20.95	3.39	16.43	2.72	9.52	2.59	5.70	1.54
Tolerance	上表参照							
Tol. Range	21.71 20.57	3.64 3.14	17.19 16.05	2.97 2.47	10.28 9.14	2.84 2.34	6.46 5.32	1.79 1.29
1. EZE 4	21.04	3.33	16.55	2.78	9.21	2.63	6.01	1.77
2. EZE 6	21.24	3.49	16.79	2.68	9.95	2.58	6.01	1.42
3. EZE 88	21.34	3.35	16.82	2.86	9.49	2.72	6.21	1.76
4. EZE 25	21.39	3.43	17.05	2.90	9.43	2.56	6.21	1.64
5. EZE 18	20.93	3.26	16.54	2.67	9.17	2.66	6.12	1.70
6. EZE 11	21.22	3.36	16.73	2.75	9.25	2.55	5.89	1.70
7. EZE 83	21.22	3.60	16.76	2.76	9.15	2.54	6.02	1.71
8. EZE 35	21.45	3.44	17.00	2.83	9.65	2.53	6.20	1.43
9. EZE 71	21.21	3.34	16.54	2.80	9.15	2.45	6.28	1.76
InstrumentNo.	YB403,YB408,YE089,YE091,YE044,YE067							

Reviewed by TOSHIBA

発行 Issued by Quality Control Staff
立会者 Witnessed by Jun 20, 2010
検査者:[ダイケン] Inspected by 小栗
検査日付: Inspected date 2010-6-12

承認 Approved by 木村 2010-6-12
調査 Reviewed by 工藤 2010-6-12
担当 Prepared by 大内 2010-6-12

東芝ジーイータービンコンポーネンツ株式会社
Toshiba GE Turbine Components Co., Ltd.

IP7018054

TGTC
品質記録
QUALITY RECORD

QR-K

磁粉探傷試験成績書
Magnetic Particle Inspection Record

PC-Z0201-02
単位 Unit mm

注文主 Customer: TSB
施設名 Plant: XUIN2
機器名 Item: Steam Turbine Bucket
部品名 Part: NN30"B L-0 BKT C/CW
製造番号 Job No.:
図面番号 Drawing No.: 0KS122973-B
適用規格/要領書 Standard/Procedure: KQ-SI3036-g

数量 Quantity	88 Pieces	材質 Material	K11C77E-R4
試験時期 Examination stage	機械加工研磨完了後 After Final Polishing	試験日付 Examined date	2010-6-21

探傷条件 Examined Conditions	探傷装置 Equipment	Eishin Kagaku Co., Ltd. TF-50	管理番号	CE0003
	磁化方法 Magnetization	Head Shot Method and Coil Method		
	磁化電流/時間 Current/Duration	DC1200A 15秒 1回 DC16000AT/ sec. times		
	ブラックライト Black light	L1000	管理番号	CE0003
表面状態 Surface condition	機械加工及び研磨面 Machining&Polishing Surface			
磁粉 Magnetic particle	湿式蛍光磁粉 SY8000 A/1			
標準試験片 Standard T.P.	JIS Z2320-1 A1-30-100 円形			

探傷範囲 Examined area: All Surface

判定 Evaluation: ☑合格 Acceptable / □不合格 Unacceptable

検査本数 Quantity	88Pieces
合格本数 Acceptable	88Pieces

Reviewed by TOSHIBA JUL. 5. 2010

検査者:[ダイケン] Inspected by: 小栗
検査日付: Inspected date: 2010-6-21

発行 Issued by: 品質管理部 Quality Control Staff
立会者 Witnessed by:
承認 Approved by: 木佐貫 2010-6-21
調査 Reviewed by: 工藤 2010-6-21
担当 Prepared by: 大内 2010-6-21

東芝ジーイータービンコンポーネンツ株式会社
Toshiba GE Turbine Components Co., Ltd.

IP7018055

TGTC

品質記録
QUALITY RECORD

QR−K

単羽根固有振動数計測記録
(Single Bucket Vibration Record)

PC-B5128-a

単位Unit:Hz

ST NO.	

注文主 Customer: TSB
施設名 Plant: XUIN2
機器名 Item: Steam Turbine Bucket
部品名 Part: NN30"B L-0 BKT C/CW
製造番号 Job No.: ＿＿＿＿＿＿
図面番号 Drawing No. OKS122973-B
適用標準／要領書 Standard/Procedure: KQ−SI5101−h
判定 Evaluation: ☑ 合格 Acceptable / ☐ 不合格 Unacceptable

使用計測器 InstrumentNo. 4011H

許容振動数範囲[30"BKT L− 0 / 30"]
Tolerance
☐ 接線方向一次 1st Tangential ＿＿Hz〜＿＿Hz
軸方向一次 1st Axial ＿＿Hz〜＿＿Hz
■ Criterion: 中間値に対するバラツキ6%以内 Within 6% Variation To Medium Value

羽根番号 No.	S／No.	接線方向一次 1st Tangential	軸方向一次 1st Axial
1	EZE 98	54	113
2	EZE 65	54	107
3	EZE 60	53	111
4	EZE 1	54	108
5	EZE 97	55	109
6	EZE 103	56	112
7	EZE 88	54	109
8	EZE 25	55	111
9	EZE 83	54	112
10	EZE 84	53	110
11	EZE 18	53	110
12	EZE 11	54	112
13	CEW 23	54	113
14	EZE 90	54	110
15	EZE 50	55	112
16	CEW 6	55	113
17	EZE 10	53	112
18	EZE 89	54	113
19	EZE 13	54	113
20	EZE 75	53	108
21	EZE 16	55	110
22	EZE 59	54	113
23	EZE 4	54	107
24	EZE 6	54	112
25	EZE 35	55	113

	Min		Max		Diff.	
接線方向一次 1st Tangential	53	Hz〜	56	Hz (	3 Hz	5.5 %)
軸方向一次 1st Axial	107	Hz〜	113	Hz (	6 Hz	5.5 %)
チューニング Tuning	無			(	0 Piece)	

Reviewed by TOSHIBA Jun.30, 2010

検査者:[ダイケン] Inspected by 金川
検査日付: Inspected date 2010.6.18

発行 Issued by Quality Control Staff
~~立会者 Witnessed by~~

承認 Approved by 木佐貫 2010-6-18
調査 Reviewed by 工藤 2010-6-18
担当 Prepared by 大内 2010-6-18

東芝ジーイータービンコンポーネンツ株式会社
Toshiba GE Turbine Components Co., Ltd.

IP7018056

MOMENT WEIGH CHARTING-BKTS PAGE 1/1

XUIN2 NN30"L-0

STAGE CT DWG#: 0KS122973

Measured Date: 2010.6.21 中村 金山

VANE SUPPORT B DISTANCE 12 3/8 "

RR= 23.625 " 88 NUMBER OF BUCKETS ON ROW

1lb= 453.592 g

MWT NO.	SERIAL NO.	MOMENT WEIGH	MWT NO.	SERIAL NO.	MOMENT WEIGH
1	EZE 98	1143.36	51	EZE 69	1150.64
2	EZE 65	1133.97	52	EZE 32	1139.59
3	EZE 60	1128.09	53	EZE 109	1144.08
4	EZE 1	1134.44	54	EZE 45	1149.46
5	EZE 97	1151.58	55	EZE 37	1146.41
6	EZE 103	1155.57	56	EZE 17	1134.66
7	EZE 88	1144.29	57	EZE 51	1142.88
8	EZE 25	1150.87	58	EZE 7	1134.89
9	EZE 83	1132.80	59	EZE 22	1146.40
10	EZE 84	1128.11	60	EZE 12	1154.86
11	EZE 18	1123.16	61	EZE 87	1159.09
12	EZE 11	1133.03	62	EZE 62	1131.17
13	EZE 99	1147.59	63	EZE 82	1119.64
14	EZE 72	1145.24	64	EZE 34	1129.75
15	EZE 73	1145.00	65	EZE 93	1164.02
16	EZE 77	1153.46	66	EZE 36	1134.66
17	EZE 40	1119.42	67	EZE 14	1119.18
18	CEW 23	1157.45	68	EZE 27	1141.95
19	EZE 90	1139.60	69	EZE 56	1149.93
20	EZE 50	1138.19	70	EZE 81	1129.50
21	CEW 6	1149.22	71	EZE 57	1135.84
22	EZE 10	1154.39	72	EZE 46	1143.85
23	EZE 89	1139.37	73	EZE 29	1150.18
24	EZE 13	1133.72	74	EZE 94	1142.89
25	EZE 75	1140.53	75	EZE 79	1129.98
26	EZE 59	1128.57	76	EZE 41	1161.44
27	EZE 4	1129.26	77	EZE 30	1124.09
28	EZE 6	1130.21	78	EZE 70	1131.14
29	EZE 35	1144.30	79	EZE 92	1145.22
30	EZE 66	1160.50	80	EZE 58	1146.17
31	CEW 20	1157.44	81	EZE 63	1146.64
32	EZE 43	1133.49	82	EZE 85	1155.10
33	EZE 28	1125.52	83	EZE 68	1132.79
34	EZE 91	1122.00	84	EZE 19	1121.52
35	EZE 52	1134.43	85	EZE 5	1125.51
36	EZE 49	1137.50	86	EZE 26	1149.93
37	EZE 54	1139.13	87	EZE 71	1135.13
38	EZE 107	1153.92	88	ANE 75	1157.90
39	CEW 29	1147.82	89		
40	EZE 16	1148.77	90		
41	EZE 53	1134.20	91		
42	EZE 31	1123.18	92		
43	CEW 24	1148.76	93		
44	EZE 76	1156.51	94		
45	EZE 8	1138.44	95		
46	EZE 80	1143.38	96		
47	EZE 67	1151.81	97		
48	EZE 64	1133.97	98		
49	EZE 44	1147.83	99		
50	EZE 86	1141.03	100		

MWT NO.	SERIAL NO.	MOMENT WEIGH	MWT NO.	SERIAL NO.	MOMENT WEIGH
1	EZE 98	13172878	51	EZE 69	13256782
2	EZE 65	13064780	52	EZE 32	13129457
3	EZE 60	12996949	53	EZE 109	13181217
4	EZE 1	13070181	54	EZE 45	13243215
5	EZE 97	13267626	55	EZE 37	13208047
6	EZE 103	13313552	56	EZE 17	13072730
7	EZE 88	13183636	57	EZE 51	13167348
8	EZE 25	13259417	58	EZE 7	13075365
9	EZE 83	13051214	59	EZE 22	13207917
10	EZE 84	12997165	60	EZE 12	13305430
11	EZE 18	12940178	61	EZE 87	13354165
12	EZE 11	13053936	62	EZE 62	13032420
13	EZE 99	13221656	63	EZE 82	12899652
14	EZE 72	13194567	64	EZE 34	13016132
15	EZE 73	13191845	65	EZE 93	13410936
16	EZE 77	13289315	66	EZE 36	13072887
17	EZE 40	12897146	67	EZE 14	12894338
18	CEW 23	13335241	68	EZE 27	13156720
19	EZE 90	13129587	69	EZE 56	13248616
20	EZE 50	13113342	70	EZE 81	13013237
21	CEW 6	13240407	71	EZE 57	13086296
22	EZE 10	13299986	72	EZE 46	13178538
23	EZE 89	13126908	73	EZE 29	13251467
24	EZE 13	13061885	74	EZE 94	13167478
25	EZE 75	13140345	75	EZE 79	13018724
26	EZE 59	13002565	76	EZE 41	13381168
27	EZE 4	13010472	77	EZE 30	12950936
28	EZE 6	13021446	78	EZE 70	13032161
29	EZE 35	13183722	79	EZE 92	13194394
30	EZE 66	13370367	80	EZE 58	13205325
31	CEW 20	13335112	81	EZE 63	13210682
32	EZE 43	13059207	82	EZE 85	13308152
33	EZE 28	12967354	83	EZE 68	13051171
34	EZE 91	12926828	84	EZE 19	12921297
35	EZE 52	13070051	85	EZE 5	12967310
36	EZE 49	13105349	86	EZE 26	13248616
37	EZE 54	13124186	87	EZE 71	13078130
38	EZE 107	13294629	88	ANE 75	13340426
39	CEW 29	13224335	89		
40	EZE 16	13235222	90		
41	EZE 53	13067372	91		
42	EZE 31	12940394	92		
43	CEW 24	13235093	93		
44	EZE 76	13324397	94		
45	EZE 8	13116280	95		
46	EZE 80	13173137	96		
47	EZE 67	13270261	97		
48	EZE 64	13064780	98		
49	EZE 44	13224378	99		
50	EZE 86	13146048	100		

Reviewed by TOSHIBA

Y. Hirose

Jun. 25, 2010

IP7018057

Wuxi Turbine Blade Co.,Ltd. inspection report for raw material

Supplier	BAOSHAN IRON & STEEL CO.,LTD				Delivery Condition			Annealing							
Material	K11C77E-R4				Steel Factory Heat No.			973D0035		Size	φ180		Rep. No.	0901000592	
Surface Condition	No Defect							Standard		PN-KS01161-c					
Chem. Composition	C	Mn	Cr	Si	Ni	S	P	V	Mo	N	Cu	Al	Nb	Sn	CE
Requirement	0.10-0.17	0.65-1.05	11.25-12.75	0.10-0.35	2.25-3.25	≤0.015	≤0.020	0.25-0.40	1.50-2.00	0.020-0.045	–	–	–	–	≤9.0
Content(%)	0.13	0.79	11.62	0.19	2.70	0.002	0.015	0.31	1.69	0.031	0.06	0.020	0.010	0.010	4.4
Content of WTB(%)	0.12	0.78	11.72	0.17	2.72	0.001	0.020	0.31	1.66	0.022	0.06	0.022	0.003	0.004	4.9

Heat-Treat Condition				Mechanical Property								
	Quenching	Tempering	Tempering	Specimen No.	Rm(Mpa) ≥1110	Rp0.02(Mpa) ≥765	A(%) ≥13	Z(%) ≥30	Akv(J) ≥54			HB 331~375
Temp.	1020℃	565℃	565℃									
				1#	1140	820	19.0	76.5	193	198	206	356
				2#	1140	835	17.5	76.5	212	205	204	354

Metallographic Microstructure of Raw Material

Sample No.	Non-metal inclusion A	B	C	D	δ-Fe(%) ≤1.0%	Microstructure (Uniform tempered martensite)	Grain Size Better than Grade 4	Remark:
1#	0,0.5e	0,0.5e	0,0.5e	0,1.5e	<0.5%	Uniform tempered martensite	5grade	
2#	0,0.5e	0,0.5e	0,0.5e	0,1.5e	<0.5%		5grade	

Metallographic Macrostructure of Raw Material

Sample No.	Normal porosity	Center porosity	Square segregation	Others	Surface Inspection
1#	1.0	1.0	1.0	–	Accepted
2#	1.0	1.0	1.0	–	

无锡透平叶片有限公司 质保专用章 2010.3.17 Wuxi Turbine Blade Co.,Ltd. Quality Assurance Department

Result:	Results Meet With Requirements				
Checker	李敏捷	Review	魏胜根	Date	2009.10.28

L-0 C/CCW (G side)

Reviewed by TOSHIBA J. Ohirose Sep. 14, 2010

Reviewed by TGTC Mar. 26. '10 J. Ozawa

-85/53-

IP7018058

Reviewed by TGTC May. 29 '10

Wuxi turbine Blade works inspection report for raw material

Supplier	Ben-xi Special steel Co. Ltd.				Delivery condition			Annealing					
Material	K11C77E-R4				Steel factory heat No.			D07082		Size		φ	180
Surface condition	Finished the bar partly and no defect by vision.							Acceptance standard		PN-KS01161-b			
Commission unit	Inspector							Report No.		60229			
Chemical composition	C	Mn	Cr	Si	Ni	S	P	V	N	Mo	Fe		
Content (%)	0.13	0.82	12.30	0.22	2.69	0.007	0.012	0.34	0.022	1.79	Others		

Mechanical properties	Temperature (°C) Quenching	Temperature (°C) Tempering	Specimen No.	Rm Mpa	Rp0.02MPa	A%	Z%	Akv			HB
	1020°C	570°C	1#	1200	850	18.0	64.0	150	125	125	362
			2#	1200	840	19.0	65.0	156	118	125	360

Sample No.	High power metallgraphic for raw material							
	Non-metal inclusion				δ-Fe (%)	Grain Size	Microstructure	Others
	A	B	C	D				
1#	0.5 0e	1.0 0e	0.5 0e	1.5 0e	Average<1.5%	6grade	Microstructure of tempered Martensite	
2#	0.5 0e	1.0 0e	0.50e	1.5 0e	Average<1.5%	6grade		

Sample No.	Low power metallgraphic for raw material				
	Normal porosity	Center porosity	Square segregation	Others	
1#	1.0	1.0	1.0		
2#	1.0	1.0	1.0		
Result:	Results requirements。				
Checker	魏胜根	RE-Checker	张雪彬	Date	2006.04.21

无锡透平叶片有限公司 质量专用章 2006.5.24 Wuxi Turbine Blade Co.,Ltd. Quality Assurance Department

L-0 C/CCW (G side)

Reviewed by TOSHIBA Sep. 14, 2010

-0715

IP70180059

Wuxi turbine Blade works inspection report for raw material

Supplier	Ben-xi Special steel Co. Ltd.				Delivery condition			Annealing					
Material	K11C77E-R4				Steel factory heat No.			D10035		Size		φ	180
Surface condition	Finished the bar partly and no defect by vision.							Acceptance standard		PN-KS01161-b			
Commission unit	Inspector							Report No.		60590			
Chemical composition	C	Mn	Cr	Si	Ni	S	P	V	N	Mo	Fe		
Content (%)	0.14	0.85	11.99	0.20	2.75	0.003	0.013	0.34	0.025	1.71	Others		
Mechanical properties	Temperature (°C)		Specimen No.	Rm (Mpa)	Rp0.02 (Mpa)	A (%)	Z (%)	Akv (J)			HB		
	Quenching	Tempering											
	1020°C	565°C	1#	1150	820	20	67.5	102.5	98.5	89.5	345		
			2#	1140	805	20	67.5	96.5	101.5	88.5	340		
Sample No.	High power metallgraphic for raw material												
	Non-metal inclusion				δ-Fe (%)	Grain Size		Microstructure			Others		
	A	B	C	D									
1#	0.5 0e	1.0 0e	0.5 0e	1.5 0e	Average<1.5%	6~5grade		Microstructure of tempered Martensite					
2#	0.5 0e	1.0 0e	0.50e	1.5 0e	Average<1.5%	6~5grade							
Sample No.	Low power metallgraphic for raw material												
	Normal porosity		Center porosity		Square segregation			Others					
1#	1.0		1.0		1.0								
2#	1.0		1.0		1.0								
Result:	Results requirements.												
Checker	魏胜根		RE-Checker		张雪彬			Date		2006.09.11			

无锡透平叶片有限公司
质管专用章
2010.5.24
Wuxi Turbine Blade Co.,Ltd.
Quality Assurance Department

L-0 c/ccw (G side)

Reviewed by TOSHIBA J. Idrose Sep. 14, 2010

Reviewed by TGTC May. 27 '10

-48/53-

IP7018060

TGTC
品質記録
QUALITY RECORD

QR−K

PC-B5010-c
Unit : mm
ST No.

完成品寸法検査
Final Inspection Record

注文主 Customer: TSB
施設名 Plant: XUIN2
機器名 Item: Steam Turbine Bucket
部品名 Part: NN30"B L-0 BKT C/CCW
製造番号 Job No.: M246152 CAV0101
図面番号 Dwg No.: OKS122973−B
適用規格/要領書 Standard/Procedure: KQ-SI3027-f
判定 Evaluation: ☐合格 Acceptable ☐不合格 Unacceptable

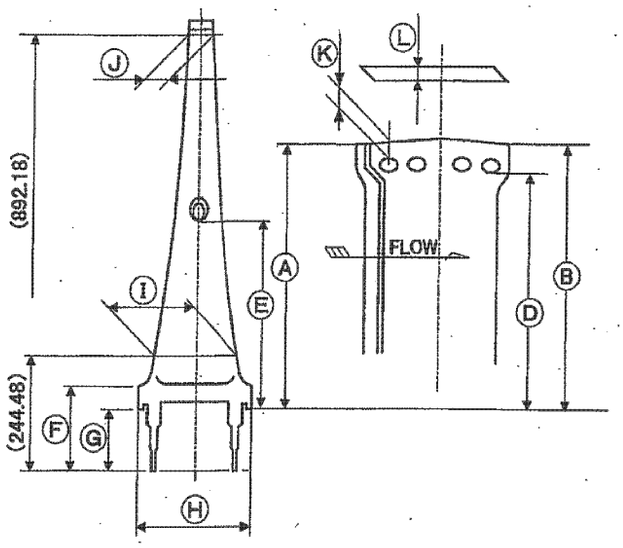

位置 Position		A	B		D	E (Suction)	E (Pressure)	F
図面寸法 Dwg.		790.30	791.70		776.29	400.75	402.12	168.28
公差 Tolerance		+0.20 −0.38	+0.20 −0.38		+0.13 −0.13	+0.13 −0.13	+0.13 −0.13	+0.20 −0.38
実測値 Act.	1	+0.07	+0.12		+0.08	+0.07	+0.08	+0.13
	2	+0.07	+0.10		+0.07	+0.08	+0.07	+0.18
Instrument No.		CMM1	CMM1		CMM1	CMM1	CMM1	CMM1

位置 Position		G	H	I	J	K	L
図面寸法 Dwg.		138.11	254.00	165.76	45.35	7.63	11.64
公差 Tolerance		+0.08 −0.08	+0.40 −0.40	+1.02 −0.38	+1.02 −0.38	+0.26 −0.13	+0.08 −0.08
実測値 Act.	1	−0.02	+0.13	−0.05	−0.21	−0.01	+0.01
	2	−0.03	+0.13	−0.01	−0.27	−0.03	0
Instrument No.		CMM1	CMM1	CMM1	CMM1	CMM1	CMM1

Model 1: S/No. EZH 68
Model 2: S/No. EZH 2

Reviewed by TOSHIBA J. Ichinose Sep. 14, 2010

検査者:[ダイケン] Inspected by 高橋
検査日付: Inspected date 2010. 8. 2

発行 Issued by Quality Control Staff
立会者 Witnessed by
承認 Approved by 木佐貫 2010-8-2
調査 Reviewed by 工藤 2010-8-2
担当 Prepared by 天内 2010-8-2

東芝ジーイータービンコンポーネンツ株式会社
Toshiba GE Turbine Components Co., Ltd.

IP7018061

IGIC
品質記録
QUALITY RECORD

QR−K

PC-B5015-c
Unit : mm
ST No.

羽根有効部肉厚寸法検査
Airfoil Thickness Record

注文主 Customer: TSB
施設名 Plant: XUIN2
機器名 Item: Steam Turbine Bucket
部品名 Part: NN30"B L-0 BKT C/CCW
製造番号 Job No.: M246152 CAV0101
図面番号 Dwg No.: OKS122973−B
適用規格/要領書 Standard/Procedure: KQ-SI3027-f
判定 Evaluation: ☑合格 Acceptable ☐不合格 Unacceptable

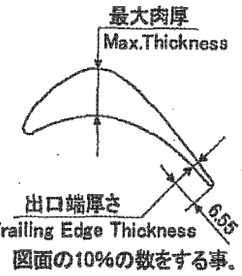

図面の10%の数をする事。
Check 10% of Dwg-total number
図面定数(88)
Quota
*研磨工程内において、羽根全数について計測がおこなわれ、基準値内に仕上げられていることを確認した。

有効長 Active Length	最大肉厚公差 Max. Thickness Tolerance	出口端厚公差 Trailing Edge Thickness Tol.
101.6以下	+0.25 −0.25	+10% −0.13
101.7〜203.9	+0.38 −0.25	+10% −0.25
203.3〜431.8	+0.51 −0.25	+10% −0.25
431.9〜762.0	+0.76 −0.38	+10% −0.25
762.1以上	+0.76 −0.38	+20% −0.25
全ての最終段階	+0.76 −0.38	+0.25 −0.25

備考)Z−Z断面の最大肉厚は出口端より70mmの位置とする。

Section	K−K		H−H		R−R		Z−Z	
Section Height	244.48		396.88		663.58		892.18	
Check Point	Max.	Trail.Edge	Max.	Trail.Edge	Max.	Trail.Edge	Max.	Trail.Edge
Dwg.	20.95	3.39	16.43	2.72	9.52	2.59	5.70	1.54
Tolerance	上表参照							
Tol. Range	21.71 20.57	3.64 3.14	17.19 16.05	2.97 2.47	10.28 9.14	2.84 2.34	6.46 5.32	1.79 1.29
1. EZH 68	21.03	3.33	16.94	2.72	9.80	2.37	6.32	1.57
2. EZH 2	21.19	3.31	16.84	2.74	9.79	2.64	6.32	1.68
3. EZH 28	21.13	3.32	16.97	2.77	9.64	2.55	6.26	1.76
4. EZH 1	21.40	3.32	17.03	2.81	10.13	2.75	6.16	1.70
5. EZH 83	21.09	3.43	16.66	2.92	9.75	2.55	6.17	1.74
6. EZH 17	21.22	3.50	16.80	2.95	9.56	2.49	6.36	1.57
7. EZH 3	21.11	3.23	16.61	2.81	9.50	2.49	6.11	1.61
8. EZH 85	21.23	3.34	16.72	2.92	9.65	2.41	5.95	1.49
9. EZH 15	21.11	3.35	16.81	2.93	9.46	2.73	6.03	1.55
InstrumentNo.	YE091,YE089,YE067,YE044,YB403,YB408							

Reviewed by TOSHIBA. Sep. 14, 2010

検査者:[ダイケン] Inspected by 有馬
検査日付: Inspected date 2010−8−28

発行 Issued by: Quality Control Staff
立会者 Witnessed by:
承認 Approved by: 木佐貫 2010-8-28
調査 Reviewed by: 工藤 2010-8-28
担当 Prepared by: 大内 2010-8-27

東芝ジーイータービンコンポーネンツ株式会社
Toshiba GE Turbine Components Co., Ltd.

IP7018062

TGTC

品質記録
QUALITY RECORD

QR-K

磁粉探傷試験成績書
Magnetic Particle Inspection Record

PC-Z0201-02-a

単位 Unit mm

ST No	

注文主 Customer: TSB
施設名 Plant: XUIN2
機器名 Item: Steam Turbine Bucket
部品名 Part: NN30"B L-0 BKT C/CCW
製造番号 Job No.: M246152 CAV 0101
図面番号 Drawing No.: OKS122973-B
適用規格/要領書 Standard/Procedure: KQ-SI3036-g

数量 Quantity: 88 Pieces
材質 Material: K11C77E-R4
試験時期 Examination stage: 機械加工研磨完了後 After Final Polishing
試験日付 Examined date: 2010-9-7

探傷条件 Examined Conditions	探傷装置 Eishin Kagaku Co., Ltd. Equipment TF-50	管理番号 CE0003	表面状態 Surface condition	機械加工及び研磨面 Machining&Polishing Surface
	磁化方法 Magnetization	Head Shot Method and Coil Method	磁粉 Magnetic particle	湿式蛍光磁粉 SY8000 A/1
	磁化電流/時間 Current/Duration	DC1200A 15秒 1回 DC16000AT/ sec. times	標準試験片 Standard T.P.	JIS Z2320-1 A1-30-100 円形
	ブラックライト Black light	L1000	管理番号 CE0003	

探傷範囲 Examined area: All Surface

判定 Evaluation: ☑合格 Acceptable ☐不合格 Unacceptable

検査本数 Quantity	88Pieces
合格本数 Acceptable	88Pieces

Reviewed by TOSHIBA J. Ishizuka Sep. 14, 2010

検査者:[ダイケン] Inspected by: 小泉
検査日付: Inspected date: 2010-9-7

発行 Issued by: 品質管理部 Quality Control Staff
立会者 Witnessed by:

承認 Approved by: 木佐貫 2010-9-7
調査 Reviewed by: 工藤 2010-9-7
担当 Prepared by: 大内 2010-9-7

東芝ジーイータービンコンポーネンツ株式会社
Toshiba GE Turbine Components Co., Ltd.

IP7018063

TGTC

品質記録
QUALITY RECORD

QR−K

単羽根固有振動数計測記録
(Single Bucket Vibration Record)

PC-B5128

単位Unit:Hz

ST NO.	

注文主 Customer: TSB
施設名 Plant: XUIN2
機器名 Item: Steam Turbine Bucket
部品名 Part: NN30"B L-0 BKT C/CCW
製造番号 Job No.: M246152 CAV0101
図面番号 Drawing No.: OKS122973-B
適用標準／要領書 Standard/Procedure: KQ−SI5101-h
判定 Evaluation: ☑ 合格 Acceptable / ☐ 不合格 Unacceptable

使用計測器 Instrument No.: 4011H

許容振動数範囲 Tolerance [30"BKT L- 0 / 30"]

☐	接線方向一次 1st Tangential	____Hz～____Hz
	軸方向一次 1st Axial	____Hz～____Hz
■	中間値に対するバラツキ6%以内 Within 6% Variation To Medium Value	

Criterion

羽根番号 No.	S／No.	接線方向一次 1st Tangential	軸方向一次 1st Axial
1	EZH 65	53	106
2	EZH 85	53	107
3	EZH 50	54	109
4	EZH 30	54	108
5	EZH 45	53	106
6	EZH 15	53	106
7	EZH 22	55	110
8	EZH 24	55	109
9	EZH 17	53	106
10	EZH 3	53	106
11	EZH 83	53	106
12	EZH 91	53	109
13	EZH 104	55	110
14	EZH 66	53	106
15	EZH 73	52	107
16	EZH 33	55	112
17	EZH 72	54	107
18	EZH 62	53	110
19	EZH 94	54	107
20	CEX 11	55	112
21	BZH 57	54	112
22	BZH 58	53	112
23	BZH 38	54	107
24	CEX 14	55	110
25	BZH 37	55	110

	Min		Max		Diff.	
接線方向一次 1st Tangential	52	Hz～	55	Hz (	3 Hz	5.6 %)
軸方向一次 1st Axial	106	Hz～	112	Hz (	6 Hz	5.5 %)
チューニング Tuning	無			(	0 Piece)	

Reviewed by TOSHIBA Sep. 14, 2010

検査者:[ダイケン] Inspected by 金川
検査日付: Inspected date 2010.9.3

発行 Issued by Quality Control Staff
立会者 Witnessed by

承認 Approved by 木佐貫 2010-9-3
調査 Reviewed by 工藤 2010-9-3
担当 Prepared by 大内 2010-9-3

東芝ジーイータービンコンポーネンツ株式会社
Toshiba GE Turbine Components Co., Ltd.

IP7018064

MOMENT WEIGH CHARTING-BKTS PAGE 1/1

XUIN2 NN30"L-0

STAGE CG DWG#: OKS122973

Measured Date: 2010 9.8

VANE SUPPORT B DISTANCE 12 3/8 "

RR= 23.625 " 88 NUMBER OF BUCKETS ON ROW

1lb= 453.592 g

MWT NO.	SERIAL NO.	MOMENT WEIGH	MWT NO.	SERIAL NO.	MOMENT WEIGH
1	EZH 65	1128.78	51	EZH 79	1121.52
2	EZH 85	1127.40	52	EZH 67	1138.19
3	EZH 50	1159.08	53	EZH 59	1144.04
4	EZH 30	1150.38	54	EZH 2	1127.87
5	EZH 45	1124.33	55	EZH 68	1131.14
6	EZH 15	1134.41	56	EZH 103	1153.44
7	EZH 22	1161.42	57	EZH 80	1144.51
8	EZH 24	1163.30	58	EZH 35	1114.46
9	EZH 17	1132.55	59	EZH 39	1131.59
10	EZH 3	1117.53	60	EZH 97	1134.20
11	EZH 83	1128.56	61	EZH 55	1135.62
12	EZH 91	1135.60	62	EZH 40	1148.75
13	EZH 104	1161.20	63	CEX 30	1167.29
14	EZH 66	1127.62	64	EZH 16	1164.48
15	EZH 73	1133.71	65	EZH 42	1151.54
16	EZH 33	1167.29	66	EZH 14	1142.63
17	EZH 72	1148.27	67	CEX 17	1159.55
18	EZH 62	1121.98	68	EZH 69	1139.36
19	EZH 4	1133.48	69	EZH 64	1129.73
20	EZH 81	1132.56	70	EZH 5	1137.00
21	EZH 34	1136.06	71	EZH 23	1118.23
22	EZH 63	1131.86	72	EZH 101	1142.41
23	EZH 84	1142.39	73	CEX 39	1159.31
24	EZH 41	1133.96	74	EZH 44	1135.38
25	EZH 94	1148.04	75	EZH 53	1131.84
26	CEX 11	1164.70	76	EZH 100	1128.57
27	EZH 57	1146.62	77	EZH 74	1157.66
28	EZH 58	1138.65	78	CEX 40	1157.43
29	EZH 38	1136.06	79	EZH 29	1149.45
30	CEX 14	1159.54	80	EZH 52	1133.01
31	APA 11	1165.17	81	EZH 20	1146.63
32	EZH 37	1163.55	82	EZH 47	1134.42
33	EZH 61	1141.23	83	EZH 49	1135.13
34	EZH 46	1148.03	84	EZH 77	1125.74
35	EZH 10	1157.89	85	EZH 71	1133.72
36	EZH 8	1169.17	86	EZH 27	1118.72
37	EZH 7	1166.58	87	EZH 78	1152.02
38	EZH 31	1136.31	88	EZH 70	1116.59
39	EZH 1	1158.83	89		
40	CEX 18	1153.91	90		
41	EZH 12	1162.13	91		
42	EZH 75	1126.70	92		
43	EZH 13	1162.13	93		
44	EZH 28	1121.07	94		
45	EZH 92	1133.72	95		
46	EZH 86	1143.59	96		
47	CEX 16	1167.06	97		
48	EZH 9	1143.35	98		
49	EZH 107	1134.19	99		
50	EZH 6	1127.87	100		

MWT NO.	SERIAL NO.	MOMENT WEIGH	MWT NO.	SERIAL NO.	MOMENT WEIGH
1	EZH 65	13004985	51	EZH 79	12921297
2	EZH 85	12988999	52	EZH 67	13113299
3	EZH 50	13354035	53	EZH 59	13180698
4	EZH 30	13253757	54	EZH 2	12994400
5	EZH 45	12953615	55	EZH 68	13032117
6	EZH 15	13069835	56	EZH 103	13289012
7	EZH 22	13380995	57	EZH 80	13186185
8	EZH 24	13402597	58	EZH 35	12839986
9	EZH 17	13048319	59	EZH 39	13037345
10	EZH 3	12875328	60	EZH 97	13067416
11	EZH 83	13002393	61	EZH 55	13083747
12	EZH 91	13083531	62	EZH 40	13235006
13	EZH 104	13378403	63	CEX 30	13448653
14	EZH 66	12991548	64	EZH 16	13416250
15	EZH 73	13061756	65	EZH 42	13267194
16	EZH 33	13448567	66	EZH 14	13164453
17	EZH 72	13229519	67	CEX 17	13359393
18	EZH 62	12926568	68	EZH 69	13126865
19	EZH 4	13059077	69	EZH 64	13015872
20	EZH 81	13048492	70	EZH 5	13099689
21	EZH 34	13088759	71	EZH 23	12883364
22	EZH 63	13040369	72	EZH 101	13161947
23	EZH 84	13161688	73	CEX 39	13356671
24	EZH 41	13064607	74	EZH 44	13081025
25	EZH 94	13226884	75	EZH 53	13040153
26	CEX 11	13418756	76	EZH 100	13002522
27	EZH 57	13210423	77	EZH 74	13337704
28	EZH 58	13118656	78	CEX 40	13335068
29	EZH 38	13088802	79	EZH 29	13243042
30	CEX 14	13359349	80	EZH 52	13053677
31	APA 11	13424156	81	EZH 20	13210639
32	EZH 37	13405578	82	EZH 47	13069878
33	EZH 61	13148381	83	EZH 49	13078130
34	EZH 46	13226711	84	EZH 77	12969946
35	EZH 10	13340339	85	EZH 71	13061842
36	EZH 8	13470256	86	EZH 27	12888980
37	EZH 7	13440444	87	EZH 78	13272681
38	EZH 31	13091740	88	EZH 70	12864483
39	EZH 1	13351140	89		
40	CEX 18	13294499	90		
41	EZH 12	13389161	91		
42	EZH 75	12980963	92		
43	EZH 13	13389161	93		
44	EZH 28	12916113	94		
45	EZH 92	13061885	95		
46	EZH 86	13175514	96		
47	CEX 16	13445931	97		
48	EZH 9	13172748	98		
49	EZH 107	13067243	99		
50	EZH 6	12994486	100		

Reviewed by TOSHIBA

Sep. 26, 2010

IP7018065

LOS ANGELES DEPARTMENT OF WATER AND POWER (LADWP) BOARD APPROVAL LETTER

TO: BOARD OF WATER AND POWER COMMISSIONERS	DATE: December 10, 2010
RAMAN RAJ Chief Operating Officer AUSTIN BEUTNER General Manager CECILIA K.T. WELDON Chief Administrative Officer JAMES B. McDANIEL Senior Assistant General Manager Water System	SUBJECT: Specification No. N-7284 Furnish and Deliver Trailer-Mounted TEOM 1405 PM-10 Monitor Systems Recommended Award To: Thermo Environmental Instruments, Inc. Franklin, Massachusetts FOR COMMISSION OFFICE USE: RESOLUTION NO. _____
CITY COUNCIL APPROVAL REQUIRED: Yes ☐ No ☒ / IF YES, BY WHICH CITY CHARTER SECTION:	

PURPOSE

The attached Resolution recommends approval of a negotiated award to Thermo Environmental Instruments Inc. (TEI), the lowest bidder, to furnish and deliver trailer-mounted tapered element oscillating microbalance (TEOM) 1405 PM-10 Monitor Systems.

The purpose of the trailer mounted TEOMs is to measure real-time, mass concentration of suspended particulate matter with a diameter of 10 microns or less particulate matter-10 (PM-10) on a continuous basis at various locations throughout Owens Lake. The data is stored in the TEOM's internal memory and later utilized in a side-by-side analysis with data collected by TEOMs owned and operated by the Great Basin Unified Air Pollution Control District (GBUAPCD).

These TEOMs will also allow LADWP to pursue the recommendation of the Expert Panel established by the 2006 Settlement Agreement between LADWP and GBUAPCD, to refine GBUAPCD's Dust ID Model from which compliance with regulatory requirements and new areas requiring control are determined.

COST AND DURATION

Contract Total $499,780.00

This contract is a one-time spot purchase

BACKGROUND

The total quotation of $499,780.00 is approximately 17 percent higher than LADWP's estimated cost of $425,632.00. The variance is due to an error estimating the labor costs associated in assembling these customs units.

LADWP received two bids under this specification. The competition was limited due to the highly technical nature of the PM-10 Ambient Particulate Monitor, the most important component of this contract. This component incorporates tapered element oscillating microbalance technology patented by Thermo Fisher. Since this component is a patented item, at one point, LADWP considered pursuing a sole source contract. However, due to the fact that all bidders could purchase this component as well as the other components included in the specification, the bid was made available to all bidders. Therefore, the limited competition was due to bidders limited knowledge of the patented technology of the PM-10 Ambient Particulate Monitor.

Both bidders took exception to the specification. After review of the bids, it was determined to be in the best interest of LADWP to negotiate with TEI, the lowest bidder. TEI's bid included multiple exceptions to LADWP's terms and conditions, and technical portions of the specification. LADWP staff with the support from the City Attorney's Office and the Risk Management Office negotiated with TEI which led to many of their exceptions being withdrawn, a couple of areas clarified, and a few exceptions agreed upon.

In TEI's proposal, they requested Limitation of Liability Language stating their liability shall not exceed an amount equal to the lesser of the total purchase price or one million dollars. LADWP agreed that TEI's Limitation of Liability shall not exceed one million dollars.

TEI also look exception to Final Acceptance. LADWP requested 60 calendar days after date of complete delivery and TEI offered 30 calendar days after date of complete delivery. LADWP has agreed to the 30 calendar days as final acceptance.

In view of the aforementioned facts, it is in LADWP's best interest to award a negotiated contract to TEI. Said negotiated contract to be in accordance with LADWP's

Specification No. N-7284 and TEI's proposal and letters dated October 4, 7, November 29, and December 8, 2010.

METHOD OF SELECTION

☒ Competitive ☐ Cooperative Purchase ☐ Sole Source

OUTREACH EFFORTS TAKEN

Notices Issued			Responses Received		
Total	*MBE	**WBE	Total	MBE	WBE
5	0	0	2	0	0

* - Minority Business Enterprise
** - Women Business Enterprise

In addition to the original bid list, the following outreach efforts were taken:

- The Specification document was posted on the LADWP website.
- The Specification document was electronically advertised on the City of Los Angeles' Business Assistance Virtual Network (LABAVN) website for direct download.

Based on LABAVN statistical reporting, an electronic notification of the advertisement of Specification No. 7284 was sent to approximately 1,020 of its users and 24 users viewed and downloaded bid documents of the bid opportunity.

RECOMMENDATION

It is recommended that your Honorable Board adopt the attached Resolution and the contract be executed as authorized in the Resolution.

DMT:vb
Attachments
e-c/att: Austin Beutner
Raman Raj
Richard M. Brown
Aram Benyamin
James B. McDaniel
Cecilia K.T. Weldon
Lorraine A. Paskett
Mario C. Ignacio
Anselmo G. Collins
Maria Sison-Roces
Nelson Mejia
Jaime Valenzuela

IP7018069

Resolution No. _____

WHEREAS, through a competitive bid process the Los Angeles Department of Water and Power (LADWP) sought to furnish and deliver trailer-mounted TEOM 1405 PM-10 monitor systems under Specification No. N-7284; and

WHEREAS, LADWP received two bids, both of which were determined to be non-responsive; and

WHEREAS, Thermo Environmental Instruments, Inc. (TEI) was the lowest bidder, taking numerous exceptions to the terms and conditions and some technical exceptions; and

WHEREAS, LADWP discussed these exceptions with TEI and TEI has withdrawn the majority of their exceptions, except for limitation of liability and the final acceptance period, and has accepted all other LADWP terms and conditions under Specification No. N-7284. Also, LADWP accepts TEI's clarifications for Items 3 and 4; and

WHEREAS, LADWP's Water System recommends a negotiated contract be awarded to TEI under Specification No. N-7284; and

NOW, THEREFORE, BE IT RESOLVED that TEI is awarded a negotiated contract, for a total amount not to exceed $499,780.00, under Specification No. N-7284, approved as to form and legality by the City Attorney and on file with the Secretary of the Board.

BE IT FURTHER RESOLVED that the Chief Accounting Employee is hereby authorized and directed to draw demands upon the Water Revenue Fund in accordance with the terms of this contract awarded pursuant to Specification No. N-7284 and this resolution.

BE IT FURTHER RESOLVED that the President or Vice President, or the General Manager, or such person as the General Manager shall designate in writing, and the Secretary, Assistant Secretary, or the Acting Secretary of the Board are hereby authorized and directed to execute said contract for and on behalf of LADWP.

I HEREBY CERTIFY that the foregoing is a full, true and correct copy of the resolution adopted by the Board of Water and Power Commissioners of the City of Los Angeles at its meeting held

_____
Secretary

APPROVED AS TO FORM AND LEGALITY
CARMEN A. TRUTANICH, CITY ATTORNEY

DEC 10 2010

BY _____
DEPUTY CITY ATTORNEY

IP7018070

IP7018071

TOSHIBA Leading Innovation >>>	INSPECTION AND TEST PLAN	LPA ROTOR	
Written by: TIC	INTERMOUTAIN POWER	Outage Date: Oct. 2010	Rev: A
Preliminary Approved by: T. Suzuki/D. Haag / C. Klein. N.Kitaguchi / J.Radish/	LP TURBINE L-0 BLADE REPLACEMENT		Revision Date: 28 September 2010

Task No.	Process Description	Inspection Activity	Control Procedure / Support Documents	Inspection Requirements: Test Activity	H/W/R	Inspect by	Document / Signature	Records Complete Sign-off
Pre-outage setup								
1.	Site pre outage walk down	Scaffolding and staging set up		Vis	W	Sup/TIC [redacted]	*	CHK TIC SK PA IPP
		Rotor Skids staged		Vis	W	Sup/TIC [redacted]	*	CHK TIC SK PA IPP
		Lathe set up		Vis	W	Sup/TIC [redacted]	* PERFORMED LATER IN PROJECT CHK	
		Tooling on site		Vis	W	Sup/TIC [redacted]	*	DUPLICATE SK PA IPP
		Temporary power		Vis	W	Sup/TIC [redacted]	*	CHK TIC SK PA IPP
		Walkways clear		Vis	W	Sup/TIC [redacted]	*	CHK

Inspection Requirements Legend:

	H – Hold Point	W – Witness Point	R – Review Documentation		* - Signature Required
Test Activity	Vis -- Visual Inspection	Dim – Dimensional Inspection	Doc – Review documents	NDT – Non Destructive Testing	Outage Start Date:
Inspect^{n} by	TIC – TIC PM or Engineer	Sup – Labor Supervisor	NDT – NDT Contractor	C – Customer personnel	Other – Specify group

Copyright © 2009 Toshiba International Corporation. All rights reserved.

IP7018072

TOSHIBA Leading Innovation >>>	INSPECTION AND TEST PLAN	LPA ROTOR	
Written by: TIC	INTERMOUTAIN POWER	Outage Date: Oct. 2010	Rev: A
Preliminary Approved by: T. Suzuki/D. Haag / C. Klein. N.Kitaguchi / J.Radish/	LP TURBINE L-0 BLADE REPLACEMENT		Revision Date: 28 September 2010

Task No.	Process Description	Inspection Activity	Control Procedure / Support Documents	Inspection Requirements: Test Activity	H/W/R	Inspect by	Document / Signature	Records Complete Sign-off
IPSC activities, Rotor NDE, L-0 Dovetail Glass Bead Blast and NDE								
1.	Soak pins with penetrating oil	Perform before rotor removed from turbine to allow time for oil to penetrate		Vis	H	[redacted]	*	CHK TK
2.	Rotor Runout	With rotor in bearings and uncoupled perform rotor runout checks before removing rotor from machine.		Dim	H	[redacted]/ TIC	* FPC-2014 CHK TK	CHK TK
3.	Rotor Periphery MT	VT and MT rotor periphery		NDE	H	[redacted]	*	10/20/10
		Degauss rotor after completion of test.		Vis	H	[redacted]	*	10/22/10
		Review NDE results		NDE	W	[redacted]/ TIC	* NO ind.	10/22/10
4.	Glass Bead Blast L-0 Blade Dovetails	Utilize #6 or 70 Gauge glass bead media.		Vis	W	[redacted]	* - CHK, APPEARED TO BE FROM DUST DURI NOZZLE HITTING WHEEL	10/25/10

Inspection Requirements Legend:

	H – Hold Point	W – Witness Point	R – Review Documentation		* - Signature Required
Test Activity	Vis – Visual Inspection	Dim – Dimensional Inspection	Doc – Review documents	NDT – Non Destructive Testing	Outage Start Date:
Inspect[n] by	TIC – TIC PM or Engineer	Sup – Labor Supervisor	NDT – NDT Contractor	C – Customer personnel	Other – Specify group

Copyright © 2009 Toshiba International Corporation. All rights reserved.

IP7018073

TOSHIBA Leading Innovation >>>	INSPECTION AND TEST PLAN	LPA ROTOR	
Written by: TIC	INTERMOUTAIN POWER	Outage Date: Oct. 2010	Rev: A
Preliminary Approved by: T. Suzuki/D. Haag / C. Klein. N.Kitaguchi / J.Radish/	LP TURBINE L-0 BLADE REPLACEMENT		Revision Date: 28 September 2010

Task No.	Process Description	Inspection Activity	Control Procedure / Support Documents	Inspection Requirements: Test Activity	H/W/R	Inspect by	Document / Signature	Records Complete Sign-off
		Almen Gauge Test to be conducted start of each shift to verify nozzle velocity. Check nozzle opening for obstruction and check pressure setting to ensure desired mixture ratio at start of each shift.		Vis	H	[redacted]	* Midwest Turbine Nozzle check executed	
		Provide containment for L-0 wheels. Ensure 100% containment of blast media		Vis	H	[redacted]	*	DCS 10/26/10
		Recover glass bead material with vacuum kit.		Vis	H	[redacted]	*	DCS 10/26/10
		Glass bead blast TE and GE L-0 wheels and dovetails.		Vis	W	[redacted]	*	DCS 10/26/10
		Verify all scale, oxides, and deposits have been removed from L-0 Groove profile.		Vis	H	[redacted] / TIC	*	10/26/10 DCS 10/26/10
5.	L-0 MT Inspection	VT and MT TE and GE L-0 wheels and dovetails.		NDE	H	[redacted]	*	10/26/10
		Degauss rotor after completion of test.		Vis	H	[redacted]	*	DCS 10/26/10
		Review NDE results		NDE	W	[redacted] / TIC	*	10/27/10 DCS 10/27/10

Inspection Requirements Legend:

	H – Hold Point	W – Witness Point	R – Review Documentation		* - Signature Required
Test Activity	Vis – Visual Inspection	Dim – Dimensional Inspection	Doc – Review documents	NDT – Non Destructive Testing	Outage Start Date:
Inspect[n] by	TIC – TIC PM or Engineer	Sup – Labor Supervisor	NDT – NDT Contractor	C – Customer personnel	Other – Specify group

Copyright © 2009 Toshiba International Corporation. All rights reserved.

IP7018074

TOSHIBA Leading Innovation >>>	INSPECTION AND TEST PLAN	LPA ROTOR	
Written by: TIC	INTERMOUTAIN POWER	Outage Date: Oct. 2010	Rev: A
Preliminary Approved by: T. Suzuki/D. Haag / C. Klein. N.Kitaguchi / J.Radish/	LP TURBINE L-0 BLADE REPLACEMENT		Revision Date: 28 September 2010

Task No.	Process Description	Inspection Activity	Control Procedure / Support Documents	Inspection Requirements:			Document / Signature	Records Complete Sign-off
				Test Activity	H/W/R	Inspect by		
LP Rotor Bore/Phase Array Inspection Activities (Structural Integrity)								
1.	Bore Plug Removal	Identify end for removal		Vis	H	[redacted]/TIC	*	10/23/10 10/23/10
		Remove rotor bore plug		Vis	H	[redacted]	*	
2.	Rotor Bore inspection	Inspect rotor bore surface		Vis	H	[redacted]	*	10/24/10
		Measure rotor bore		Dim	H	[redacted]	*	
		Hone Rotor Bore		Vis	H	[redacted]	*	
		Measure rotor bore		Dim	H	[redacted]	*	
		Visual inspection honed bore surface	TO be completed AFTER BORE INSPECTION	Vis	W	[redacted]/TIC	*	
		Perform eddy current and ultrasonic inspection of bore		NDE	H	[redacted]	*	10-29-10
		Clean rotor bore		Vis	H	[redacted]	*	10-29-10
		Review NDE test results		NDE	W	[redacted]/TIC	*	
		Determine need for remaining life assessment		Vis	H	[redacted]/TIC	*	

Inspection Requirements Legend:

	H – Hold Point	W – Witness Point	R – Review Documentation		* - Signature Required
Test Activity	Vis – Visual Inspection	Dim – Dimensional Inspection	Doc – Review documents	NDT – Non Destructive Testing	Outage Start Date:
Inspect^{n} by	TIC – TIC PM or Engineer	Sup – Labor Supervisor	NDT – NDT Contractor	C – Customer personnel	Other – Specify group

Copyright © 2009 Toshiba International Corporation. All rights reserved.

IP7018075

TOSHIBA Leading Innovation >>>	INSPECTION AND TEST PLAN	LPA ROTOR	
Written by: TIC	INTERMOUTAIN POWER	Outage Date: Oct. 2010	Rev: A
Preliminary Approved by: T. Suzuki/D. Haag / C. Klein. N.Kitaguchi / J.Radish/	LP TURBINE L-0 BLADE REPLACEMENT		Revision Date: 28 September 2010

Task No.	Process Description	Inspection Activity	Control Procedure / Support Documents	Inspection Requirements:			Document / Signature	Records Complete Sign-off
				Test Activity	H/W/R	Inspect by		
3.	Rotor Blade attachment inspection L-1, L-2, and L-3	Determine disk geometry for each stage		Vis	H	[redacted]	*	JC 10/23
		Prepare digital drawing of each stage	DRAWING ON FILE AT SI	NDE	H	[redacted]	*	JC 10/24
		Automated ultrasonic detection and characterization scan of blade attachments		NDE	H	[redacted]	*	[illegible]
		Review NDE test results		NDE	W	[redacted]/TIC [redacted]	* ~~CLIENT~~	[illegible]
		Determine need for remaining life assessment		Vis	H	[redacted]/TIC [redacted]	* SS	[illegible]
4.	Rotor Bore Plug Installation	Machine replacement bore plug. ~~0.001"~~ .0015 per inch diameter interference fit.		Dim	H	[redacted]	*	MB
		Ensure correct interference fit		Dim	R	[redacted]/TIC [redacted]	*	MB 12/27/10
		FME inspection rotor bore		Vis	W	[redacted]/TIC [redacted]	*	MB
		Purge rotor bore with ~~nitrogen~~ argon. Remove all traces of moisture from rotor bore.		Vis	W	[redacted]/TIC [redacted]	*	MB

Inspection Requirements Legend:

	H – Hold Point	W – Witness Point	R – Review Documentation		* - Signature Required
Test Activity	Vis – Visual Inspection	Dim – Dimensional Inspection	Doc – Review documents	NDT – Non Destructive Testing	Outage Start Date:
Inspect^{n} by	TIC – TIC PM or Engineer	Sup – Labor Supervisor	NDT – NDT Contractor	C – Customer personnel	Other – Specify group

Copyright © 2009 Toshiba International Corporation. All rights reserved.

IP7018076

TOSHIBA Leading Innovation >>>	INSPECTION AND TEST PLAN	LPA ROTOR	
Written by: TIC	INTERMOUTAIN POWER	Outage Date: Oct. 2010	Rev: A
Preliminary Approved by: T. Suzuki/D. Haag / C. Klein. N.Kitaguchi / J.Radish/	LP TURBINE L-0 BLADE REPLACEMENT		Revision Date: 28 September 2010

Task No.	Process Description	Inspection Activity	Control Procedure / Support Documents	Inspection Requirements:			Document / Signature	Records Complete Sign-off
				Test Activity	H/W/R	Inspect by		
		Shrink bore plug ensure clearance exists between plug and rotor		Dim	R	[redacted]	*	MB
		Install bore plug and clamp in place		Dim	R	[redacted]	*	MB

Inspection Requirements Legend:

	H – Hold Point	W – Witness Point	R – Review Documentation		* - Signature Required
Test Activity	Vis – Visual Inspection	Dim – Dimensional Inspection	Doc – Review documents	NDT – Non Destructive Testing	Outage Start Date:
Inspect^{n} by	TIC – TIC PM or Engineer	Sup – Labor Supervisor	NDT – NDT Contractor	C – Customer personnel	Other – Specify group

Copyright © 2009 Toshiba International Corporation. All rights reserved.

IP7018077

TOSHIBA Leading Innovation >>>	INSPECTION AND TEST PLAN	LPA ROTOR	
Written by: TIC	INTERMOUTAIN POWER	Outage Date: Oct. 2010	Rev: B
Preliminary Approved by: T. Suzuki/D. Haag / C. Klein. N.Kitaguchi / J.Radish/	LP TURBINE L-0 BLADE REPLACEMENT		Revision Date: 22 October 2010

Task No.	Process Description	Inspection Activity	Control Procedure / Support Documents	Inspection Requirements: Test Activity	H/W/R	Inspect by	Document / Signature	Records Complete Sign-off
Blade Removal								
1.	Measure L-0 blade diameter	Measure blade diameter with pie tape.		Dim	R	Sup/TIC	Dual Flow LSB Diameter Record	CPK 10-23-2010 JK 10-23-10
2.	Remove Blade Pins	Apply Peening hammer to all pins to ensure movement.	KMS16021-d	Vis	W	Sup	*	JK 10-23-10
		Do not remove the bottom pin. Ensure that bottom pin moves	KMS16021-d	Vis	R	Sup	*	JK 10-23-10
		For Pins that did not move apply Hilti Gun.	KMS16021-d	Vis	R	Sup	*	N/A
		Measure the blade pin.	KMS16021-d	Dim	R	Sup/TIC	*PC-R6064-c	JK 10-23-10
		Evaluate the number of pins on a wheel that did not move. Determine potential need for machining entire blade row or apply contingency drilling procedure to pins that did not move.	KMS16021-d	Vis	R	Sup/TIC /Client	*	CPK 10-23-2010 JK 10-23-10 10-23-10
		Adjust the jig length for the pin removal.	KMS16021-d	Vis	W	Sup	*	JK 10-23-10
		Push the pin with the peening hammer.	KMS16021-d	Vis	W	Sup	*	JK 10-23-10

Inspection Requirements Legend:

	H – Hold Point	W – Witness Point	R – Review Documentation		* - Signature Required
Test Activity	Vis – Visual Inspection	Dim – Dimensional Inspection	Doc – Review documents	NDT – Non Destructive Testing	Outage Start Date:
Inspect^n by	TIC – TIC PM or Engineer	Sup – Labor Supervisor	NDT – NDT Contractor	C – Customer personnel	Other – Specify group

Copyright © 2009 Toshiba International Corporation. All rights reserved.

IP7018078

TOSHIBA Leading Innovation >>>	INSPECTION AND TEST PLAN	LPA ROTOR	
Written by: TIC	INTERMOUTAIN POWER	Outage Date: Oct. 2010	Rev: B
Preliminary Approved by: T. Suzuki/D. Haag / C. Klein. N.Kitaguchi / J.Radish/	LP TURBINE L-0 BLADE REPLACEMENT		Revision Date: 22 October 2010

Task No.	Process Description	Inspection Activity	Control Procedure / Support Documents	Inspection Requirements: Test Activity	H/W/R	Inspect by	Document / Signature	Records Complete Sign-off
		Once the pin starts moving, use the appropriate length "removal" pin and keep hitting the pin face with the peening hammer.	KMS16021-d	Vis	W	Sup	*	JK 10-23-10
3.	Remove shrouds	Separate shroud block with wedge		Vis	W	Sup		JK 10-23-10
		Cut suction side dimples with cut off tool.		Vis	W	Sup		JK 10-23-10
		Cut shroud blocks with cut off tool		Vis	W	Sup		JK 10-23-10
4.	Remove blades and store	Remove old blades and neatly store in IPSC provided crates.		Vis	W	Sup	*	JPR 10-23-10

Inspection Requirements Legend:

	H – Hold Point	W – Witness Point	R – Review Documentation		* - Signature Required
Test Activity	Vis – Visual Inspection	Dim – Dimensional Inspection	Doc – Review documents	NDT – Non Destructive Testing	Outage Start Date:
Inspect^{n} by	TIC – TIC PM or Engineer	Sup – Labor Supervisor	NDT – NDT Contractor	C – Customer personnel	Other – Specify group

Copyright © 2009 Toshiba International Corporation. All rights reserved.

IP7018079

TOSHIBA Leading Innovation >>>	INSPECTION AND TEST PLAN	LPA ROTOR	
Written by: TIC	INTERMOUTAIN POWER	Outage Date: Oct. 2010	Rev: B
Preliminary Approved by: T. Suzuki/D. Haag / C. Klein. N.Kitaguchi / J.Radish/	LP TURBINE L-0 BLADE REPLACEMENT		Revision Date: 22 October 2010

Task No.	Process Description	Inspection Activity	Control Procedure / Support Documents	Inspection Requirements: Test Activity	H/W/R	Inspect by	Document / Signature	Records Complete Sign-off
New Blade Assembly								
1.	Install Blades - MAX GAP, 15mm - MIN GAP 0mm - NO TWO ADJACENT BLADES WITH 0GAP GAP OR .15mm GAP	Assemble new blades onto wheel using temporary pins. Inner radial temporary pin is inserted from the inlet side of the wheel and the outer radial temporary pin is inserted from the outlet side of the wheel.	PRC SIL99004-a	Vis	R	Sup	* 中村	JRADISH 10-26-10
		Assemble the blade cover piece and sleeve.	PRC SIL99004-a	Vis	R	Sup/TIC	* 中村	JRADISH 10-26-10
		After temporary pins are installed, insert 0.07mm shim between the assembled blade and the adjacent pinned blade.	PRC SIL99004-a	Vis	R	Sup/TIC	* 中村	中村 真之 10/27/10 JK 10-27-10 CHK 10-27-2010
		Check the tongue contact	PRC SIL99004-a	Vis	R	Sup/TIC	* CHK 10-27-2010 中村	中村 真之 10/27/10
		Check the open pin hole concentricity. (Blade radial check is not required)	PRC SIL99004-a	Vis	R	Sup/TIC	* 中村	中村 真之 10/27/10 JK 10-27-10 CHK 10-27-2010
		Quick check clearance of cover segment, sleeve and blades.	PRC SIL99004-a	Dim	R	Sup/TIC	* KF CRSNRA 503-A KF CRSNRA 501-B KF CRSNRA 502-C 中村	中村 真之 CHK 10-27-2010 JK 10-27-10

Inspection Requirements Legend:

	H – Hold Point	W – Witness Point	R – Review Documentation		* - Signature Required	
Test Activity	Vis – Visual Inspection	Dim – Dimensional Inspection	Doc – Review documents	NDT – Non Destructive Testing	Outage Start Date:	
Inspect^{n} by	TIC – TIC PM or Engineer	Sup – Labor Supervisor	NDT – NDT Contractor	C – Customer personnel	Other – Specify group	

Copyright © 2009 Toshiba International Corporation. All rights reserved.

IP7018080

TOSHIBA Leading Innovation >>>	INSPECTION AND TEST PLAN	LPA ROTOR	
Written by: TIC	INTERMOUTAIN POWER	Outage Date: Oct. 2010	Rev: B
Preliminary Approved by: T. Suzuki/D. Haag / C. Klein. N.Kitaguchi / J.Radish/	LP TURBINE L-0 BLADE REPLACEMENT		Revision Date: 22 October 2010

Task No.	Process Description	Inspection Activity	Control Procedure / Support Documents	Inspection Requirements: Test Activity	H/W/R	Inspect by	Document / Signature	Records Complete Sign-off
2.	Install Pins	Ream the open hole (zero reaming and oversize reaming) with the hand-held pneumatic drill.	PRC SIL99016-a	H	R	Sup	*	JPRADISH 10-28-10 [Exc. #43 GE]
		Use machine oil or coolant for lubrication Lubrication to contain less than 1 PPM sulfur and be chlorine free.	PRC SIL99016-a	H	R	Sup	*	JPRADISH 10-28-10
		Clean the hole of any burrs or filings	PRC SIL99016-a	H	W	Sup	*	JPRADISH 10-28-10.
		Insert the new blade pins in the middle position first. Use Lubrication oil GS RUB 105, Castor Oil or equivalent on final pins if too hard to insert.	PRC SIL99016-a	H	W	Sup	*	JPRADISH 10-28-10
		Remove bottom temporary pins and repeat first step of Task 2 with final pins.	PRC SIL99016-a	H	W	Sup	*	JPRADISH 10-28-10
		Remove top temporary pins and repeat first step of Task 2 with final pins.	PRC SIL99016-a	H	W	Sup	*	JPRADISH 10-28-10
		Complete pinning quality record. Measure pin diameter.	PRC SIL99016-a	Dim	R	Sup/TIC	PC-6064-c	CHK 11-3-2010 JPRADISH

Inspection Requirements Legend:

	H – Hold Point	W – Witness Point	R – Review Documentation		* - Signature Required
Test Activity	Vis – Visual Inspection	Dim – Dimensional Inspection	Doc – Review documents	NDT – Non Destructive Testing	Outage Start Date:
Inspect^{n} by	TIC – TIC PM or Engineer	Sup – Labor Supervisor	NDT – NDT Contractor	C – Customer personnel	Other – Specify group

Copyright © 2009 Toshiba International Corporation. All rights reserved.

IP7018081

TOSHIBA Leading Innovation >>>	INSPECTION AND TEST PLAN	LPA ROTOR	
Written by: TIC	INTERMOUTAIN POWER	Outage Date: Oct. 2010	Rev: B
Preliminary Approved by: T. Suzuki/D. Haag / C. Klein. N.Kitaguchi / J.Radish/	LP TURBINE L-0 BLADE REPLACEMENT		Revision Date: 22 October 2010

Task No.	Process Description	Inspection Activity	Control Procedure / Support Documents	Inspection Requirements: Test Activity	H/W/R	Inspect by	Document / Signature	Records Complete Sign-off
3.	Caulk Cover Segments	Caulking of the inlet side of the cover requires manual support applied at the outlet side of the blade cover by a jig and steel bar tool and hydraulic jack.	PRC-SIL99017-a	Vis	H	Sup	*	J. RADISH 10-29-10
		Check clearance between each cover segment and bucket tip.	PRC-SIL99017-a Assembling drawing (document number TBD)	Dim	R	Sup/TIC	* KF CRSNRA501-~~B~~-C	JRADISH 10-29-10 10-29-10 10-30-10 100%
		Inspect clearance between sleeve and boss.	PRC-SIL99017-a ← DONE AT BUCKET ASSEMBLY	Dim	R	Sup/TIC / [redacted]	* KF CRSNRA502-C	CHK 10-30-2010 10-30-10
		Inspect maximum clearance between each pair of bucket dovetail and radial surface. DONE AT BUCKET ASSEMBLY	PRC-SIL99017-a	Dim	R	Sup/TIC	~~* KF CRSNRA503-A~~ CHK 10-30-2010	CHK 10-30-2010 10-29-10
		Inspect clearance between each dovetail. DONE AT BUCKET ASSEMBLY	PRC-SIL99017-a	Dim	R	Sup/TIC / [redacted]	* KF CRSNRA503-A	CHK 10-30-2010 10-30-10
		Caulk pressure side tenon with zero clearance between cover and blade.	PRC-SIL99017-a	Vis	W	Sup/TIC / [redacted]	*	CHK 10-30-2010 10-29-10 10-30-10
		Caulk suction side dimples with 0.4 mm clearance between cover and blade.	PRC-SIL99017-a	Vis	W	Sup/TIC / [redacted]	*	10/30/10

Inspection Requirements Legend:

	H – Hold Point	W – Witness Point	R – Review Documentation		* - Signature Required
Test Activity	Vis – Visual Inspection	Dim – Dimensional Inspection	Doc – Review documents	NDT – Non Destructive Testing	Outage Start Date:
Inspect^{n} by	TIC – TIC PM or Engineer	Sup – Labor Supervisor	NDT – NDT Contractor	C – Customer personnel	Other – Specify group

Copyright © 2009 Toshiba International Corporation. All rights reserved.

IP7018082

TOSHIBA Leading Innovation >>>	INSPECTION AND TEST PLAN	LPA ROTOR	
Written by: TIC	INTERMOUTAIN POWER	Outage Date: Oct. 2010	Rev: B
Preliminary Approved by: T. Suzuki/D. Haag / C. Klein. N.Kitaguchi / J.Radish/	LP TURBINE L-0 BLADE REPLACEMENT		Revision Date: 22 October 2010

Task No.	Process Description	Inspection Activity	Control Procedure / Support Documents	Inspection Requirements: Test Activity	H/W/R	Inspect by	Document / Signature	Records Complete Sign-off
		Penetrant test caulked tenons and dimples. Confirm there is no scratch marks on caulked tenons. Any scratch marks shall be removed. Penetrant test caulked tenons and dimples by blading technician	PRC-SIL99017-a	NDT	W	Sup/TIC / [redacted]	* 中村	CAK 10-30-2010 JC 10-29-10 10-30-10
		Complete quality record and record clearance between covers and blade.		DIM	R	Sup/TIC / [redacted]	* KF CRSNRA501-B 中村	10/30/10 中村
4.	Measure L-0 blade diameter	Measure blade diameter with pie tape.		Dim	R	Sup/TIC / [redacted]	Dual Flow LSB Diameter Record (TAB 24) 中村	TE 10-29-10 J.RADISH GE 10-30-10 J.RADISH COMPLETE. 10/30/10

STAKE PINS 2 PLACES EACH SIDE

SUP/TIC/CLIENT

CAK 11-2-2010 11-3-10

Inspection Requirements Legend:

	H – Hold Point	W – Witness Point	R – Review Documentation		* - Signature Required
Test Activity	Vis – Visual Inspection	Dim – Dimensional Inspection	Doc – Review documents	NDT – Non Destructive Testing	Outage Start Date:
Inspect^n by	TIC – TIC PM or Engineer	Sup – Labor Supervisor	NDT – NDT Contractor	C – Customer personnel	Other – Specify group

Copyright © 2009 Toshiba International Corporation. All rights reserved.

IP7018083

TOSHIBA Leading Innovation >>>	INSPECTION AND TEST PLAN	LPA ROTOR	
Written by: TIC	INTERMOUTAIN POWER	Outage Date: Oct. 2010	Rev: B
Preliminary Approved by: T. Suzuki/D. Haag / C. Klein. N.Kitaguchi / J.Radish/	LP TURBINE L-0 BLADE REPLACEMENT		Revision Date: 22 October 2010

Task No.	Process Description	Inspection Activity	Control Procedure / Support Documents	Inspection Requirements:			Document / Signature	Records Complete Sign-off
Slow Speed Balance								
1	Slow Speed Balance	Set up low speed balance machine per ReGENco instructions.	DOC000466-05 DOC000467-05 DOC000468-05	Doc	R	Sup	*	
		Set Up rotor in slow speed balance machine	DOC000466-05	Dim	H	Sup	*	
		Inspect rotor runouts and journal condition. Report out of specification conditions and required corrective measures.	DOC000466-05	Vis	H	Sup	*	
		Set up vibration measurement and data acquisition instrumentation an Easy Balance 2.2 data acquisition unit.	DOC000466-05	Vis	W	Sup	*	
		Slow Roll rotor prior to balance runs.	DOC000466-05	Vis	H	Sup	*	
		Balance run limit at pedestal <0.9 grams-inch per pound of rotor.	DOC000466-05	Dim	H	Sup	*	

Inspection Requirements Legend:

	H – Hold Point	W – Witness Point	R – Review Documentation		* - Signature Required
Test Activity	Vis – Visual Inspection	Dim – Dimensional Inspection	Doc – Review documents	NDT – Non Destructive Testing	Outage Start Date:
Inspect[n] by	TIC – TIC PM or Engineer	Sup – Labor Supervisor	NDT – NDT Contractor	C – Customer personnel	Other – Specify group

Copyright © 2009 Toshiba International Corporation. All rights reserved.

IP7018084

TOSHIBA Leading Innovation >>>	INSPECTION AND TEST PLAN	LPA ROTOR	
Written by: TIC	INTERMOUTAIN POWER	Outage Date: Oct. 2010	Rev: B
Preliminary Approved by: T. Suzuki/D. Haag / C. Klein. N.Kitaguchi / J.Radish/	LP TURBINE L-0 BLADE REPLACEMENT		Revision Date: 22 October 2010

Task No.	Process Description	Inspection Activity	Control Procedure / Support Documents	Inspection Requirements:			Document / Signature	Records Complete Sign-off
		Final Balance acceptance criteria in compliance with ISO1940/1 standards G 2.5 grades.	DOC000466-05	Vis	H	Sup/TIC/ [redacted]	*	3-10 EJK 11-3-2010
		Lock Balance weights	DOC000466-05	Vis	H	Sup	*	SK 10-3-10
		Independent verification of locked balance weights.	DOC000466-05	Vis	W	Sup/TIC/ [redacted]	*	EJK 11-3-2010 11-3-10 SK 11-3-10

Inspection Requirements Legend:

	H – Hold Point	W – Witness Point	R – Review Documentation		* - Signature Required
Test Activity	Vis – Visual Inspection	Dim – Dimensional Inspection	Doc – Review documents	NDT – Non Destructive Testing	Outage Start Date:
Inspect^{n} by	TIC – TIC PM or Engineer	Sup – Labor Supervisor	NDT – NDT Contractor	C – Customer personnel	Other – Specify group

Copyright © 2009 Toshiba International Corporation. All rights reserved.

IP7018085

TOSHIBA Leading Innovation >>>	INSPECTION AND TEST PLAN	LPA ROTOR	
Written by: TIC	INTERMOUTAIN POWER	Outage Date: Oct. 2010	Rev: B
Preliminary Approved by: T. Suzuki/D. Haag / C. Klein. N.Kitaguchi / J.Radish/	LP TURBINE L-0 BLADE REPLACEMENT		Revision Date: 22 October 2010

Task No.	Process Description	Inspection Activity	Control Procedure / Support Documents	Inspection Requirements: Test Activity	H/W/R	Inspect by	Document / Signature	Records Complete Sign-off
Post-outage Walk down								
1.	Walk down TIC work area	All tooling and equipment demobilized		Vis	W	Sup/TIC / [redacted]	* CWK	G.S.
		Tooling and equipment to be left on site stored per Client direction		Vis	W	Sup/TIC / [redacted]	* CWK	G.S.
		Floors swept		Vis	W	Sup/TIC / [redacted]	* CWK	G.S.
		Trash removed		Vis	W	Sup/TIC / [redacted]	* CWK	G.S.
		Old blades left with Client		Vis	W	Sup/TIC / [redacted]	* CWK	G.S.
		Empty blade boxes left with Client for IPSC1 outage		Vis	W	Sup/TIC / [redacted]	* CWK	G.S.
		Office trailer locked and one set of keys turned over to IPSC Contract Administrator		Vis	W	Sup/TIC / [redacted]	* CWK	G.S.

IP7018086

Inspection Requirements Legend:

	H – Hold Point	W – Witness Point	R – Review Documentation		* - Signature Required
Test Activity	Vis – Visual Inspection	Dim – Dimensional Inspection	Doc – Review documents	NDT – Non Destructive Testing	Outage Start Date:
Inspect^{n} by	TIC – TIC PM or Engineer	Sup – Labor Supervisor	NDT – NDT Contractor	C – Customer personnel	Other – Specify group

Copyright © 2009 Toshiba International Corporation. All rights reserved.

TOSHIBA Leading Innovation >>>	INSPECTION AND TEST PLAN	LPB ROTOR	
Written by: TIC	INTERMOUTAIN POWER	Outage Date: Oct. 2010	Rev: A
Preliminary Approved by: T. Suzuki/D. Haag / C. Klein. N.Kitaguchi / J.Radish/	LP TURBINE L-0 BLADE REPLACEMENT		Revision Date: 28 September 2010

Task No.	Process Description	Inspection Activity	Control Procedure / Support Documents	Inspection Requirements: Test Activity	H/W/R	Inspect by	Document / Signature	Records Complete Sign-off
Pre-outage setup								
1.	Site pre outage walk down	Scaffolding and staging set up		Vis	W	Sup/TIC / [redacted]	*	CWK TK JC PA IPP
		Rotor Skids staged		Vis	W	Sup/TIC / [redacted]	*	CWK TK JC PA IPP
		Lathe set up		Vis	W	Sup/TIC / [redacted]	* PERFORMED LATER IN PROJECT CWK	
		Tooling on site		Vis	W	Sup/TIC / [redacted]	*	CWK TK JC PA IPP
		Temporary power		Vis	W	Sup/TIC / [redacted]	*	CWK TK JC PA IPP
		Walkways clear		Vis	W	Sup/TIC / [redacted]	*	CWK

Inspection Requirements Legend:

	H – Hold Point	W – Witness Point	R – Review Documentation		* - Signature Required
Test Activity	Vis – Visual Inspection	Dim – Dimensional Inspection	Doc – Review documents	NDT – Non Destructive Testing	Outage Start Date:
Inspect by	TIC – TIC PM or Engineer	Sup – Labor Supervisor	NDT – NDT Contractor	C – Customer personnel	Other – Specify group

Copyright © 2009 Toshiba International Corporation. All rights reserved.

IP7018087

TOSHIBA Leading Innovation >>>	INSPECTION AND TEST PLAN	LPB ROTOR	
Written by: TIC	INTERMOUTAIN POWER	Outage Date: Oct. 2010	Rev: A
Preliminary Approved by: T. Suzuki/D. Haag / C. Klein. N.Kitaguchi / J.Radish/	LP TURBINE L-0 BLADE REPLACEMENT		Revision Date: 28 September 2010

Task No.	Process Description	Inspection Activity	Control Procedure / Support Documents	Inspection Requirements: Test Activity	H/W/R	Inspect by	Document / Signature	Records Complete Sign-off
IPSC activities, Rotor NDE, L-0 Dovetail Glass Bead Blast and NDE								
1.	Soak pins with penetrating oil	Perform before rotor removed from turbine to allow time for oil to penetrate		Vis	H	[redacted]	*	TIC 10/21/10
2.	Rotor Runout	With rotor in bearings and uncoupled perform rotor runout checks before removing rotor from machine.		Dim	H	[redacted]/ TIC	* FPC-2014	TIC 10/21/10
3.	Rotor Periphery MT	VT and MT rotor periphery		NDE	H	[redacted]	*	[illegible]
		Degauss rotor after completion of test.		Vis	H	[redacted]	*	[illegible]
		Review NDE results		NDE	W	[redacted]/ TIC	* ~~[illegible]~~	[illegible]
4.	Glass Bead Blast L-0 Blade Dovetails	Utilize #6 or 70 Gauge glass bead media.		Vis	W	[redacted]	*	[illegible] 10/25/10

Inspection Requirements Legend:

	H – Hold Point	W – Witness Point	R – Review Documentation		* - Signature Required
Test Activity	Vis – Visual Inspection	Dim – Dimensional Inspection	Doc – Review documents	NDT – Non Destructive Testing	Outage Start Date:
Inspect^{n} by	TIC – TIC PM or Engineer	Sup – Labor Supervisor	NDT – NDT Contractor	C – Customer personnel	Other – Specify group

Copyright © 2009 Toshiba International Corporation. All rights reserved.

IP7018088

TOSHIBA Leading Innovation >>>	INSPECTION AND TEST PLAN	LPB ROTOR	
Written by: TIC	INTERMOUTAIN POWER	Outage Date: Oct. 2010	Rev: A
Preliminary Approved by: T. Suzuki/D. Haag / C. Klein. N.Kitaguchi / J.Radish/	LP TURBINE L-0 BLADE REPLACEMENT		Revision Date: 28 September 2010

Task No.	Process Description	Inspection Activity	Control Procedure / Support Documents	Inspection Requirements: Test Activity	H/W/R	Inspect by	Document / Signature	Records Complete Sign-off
		Almen Gauge Test to be conducted start of each shift to verify nozzle velocity. Check nozzle opening for obstruction and check pressure setting to ensure desired mixture ratio at start of each shift.		Vis	H	[redacted]	*	NA FOR TSB TA
		Provide containment for L-0 wheels. Ensure 100% containment of blast media		Vis	H	[redacted]	* PERFORMED IN DUST SHACK	BLAST LSB ROTOR
		Recover glass bead material with vacuum kit.		Vis	H	[redacted]	* "	"
		Glass bead blast TE and GE L-0 wheels and dovetails.		Vis	W	[redacted]	*	10/23/10
		Verify all scale, oxides, and deposits have been removed from L-0 Groove profile.		Vis	H	[redacted] TIC	*	10/23/10 10/23/10
5.	L-0 MT Inspection	VT and MT TE and GE L-0 wheels and dovetails.		NDE	H	[redacted]	*	10/27/10
		Degauss rotor after completion of test.		Vis	H	[redacted]	*	10/27/10
		Review NDE results		NDE	W	[redacted] TIC	*	10/27/10 10/27/10

Inspection Requirements Legend:

	H – Hold Point	W – Witness Point	R – Review Documentation		* - Signature Required
Test Activity	Vis – Visual Inspection	Dim – Dimensional Inspection	Doc – Review documents	NDT – Non Destructive Testing	Outage Start Date:
Inspect by	TIC – TIC PM or Engineer	Sup – Labor Supervisor	NDT – NDT Contractor	C – Customer personnel	Other – Specify group

Copyright © 2009 Toshiba International Corporation. All rights reserved.

IP7018089

TOSHIBA Leading Innovation >>>	INSPECTION AND TEST PLAN	LPB ROTOR	
Written by: TIC	INTERMOUTAIN POWER	Outage Date: Oct. 2010	Rev: A
Preliminary Approved by: T. Suzuki/D. Haag / C. Klein. N.Kitaguchi / J.Radish/	LP TURBINE L-0 BLADE REPLACEMENT		Revision Date: 28 September 2010

Task No.	Process Description	Inspection Activity	Control Procedure / Support Documents	Inspection Requirements:			Document / Signature	Records Complete Sign-off
				Test Activity	H/W/R	Inspect by		
LP Rotor Bore/Phase Array Inspection Activities (Structural Integrity)								
1.	Bore Plug Removal	Identify end for removal		Vis	H	[redacted]/TIC [redacted]	*	CWK 10-24-2010 SG 10-24-2010 10-24-10
		Remove rotor bore plug		Vis	H	[redacted]	* 10/24/10	
2.	Rotor Bore inspection	Inspect rotor bore surface		Vis	H	[redacted]	*	
		Measure rotor bore		Dim	H	[redacted]	*	
		Hone Rotor Bore		Vis	H	[redacted]	*	
		Measure rotor bore		Dim	H	[redacted]	*	10/24/10
		Visual inspection honed bore surface	TO BE COMPLETED AFTER BORE INSPECTION	Vis	W	[redacted]/TIC [redacted]	*	MB
		Perform eddy current and ultrasonic inspection of bore		NDE	H	[redacted]	*	
		Clean rotor bore		Vis	H	[redacted]	*	
		Review NDE test results		NDE	W	[redacted]/TIC [redacted]	*	
		Determine need for remaining life assessment		Vis	H	[redacted]/TIC [redacted]	* SG	

Inspection Requirements Legend:

	H – Hold Point	W – Witness Point	R – Review Documentation		* - Signature Required
Test Activity	Vis – Visual Inspection	Dim – Dimensional Inspection	Doc – Review documents	NDT – Non Destructive Testing	Outage Start Date:
Inspect by	TIC – TIC PM or Engineer	Sup – Labor Supervisor	NDT – NDT Contractor	C – Customer personnel	Other – Specify group

Copyright © 2009 Toshiba International Corporation. All rights reserved.

IP7018090

TOSHIBA Leading Innovation >>>	INSPECTION AND TEST PLAN	LPB ROTOR	
Written by: TIC	INTERMOUTAIN POWER	Outage Date: Oct. 2010	Rev: A
Preliminary Approved by: T. Suzuki/D. Haag / C. Klein. N.Kitaguchi / J.Radish/	LP TURBINE L-0 BLADE REPLACEMENT		Revision Date: 28 September 2010

Task No.	Process Description	Inspection Activity	Control Procedure / Support Documents	Inspection Requirements:			Document / Signature	Records Complete Sign-off
				Test Activity	H/W/R	Inspect by		
3.	Rotor Blade attachment inspection L-1, L-2, and L-3	Determine disk geometry for each stage		Vis	H	[redacted]	*	
		Prepare digital drawing of each stage		NDE	H	[redacted]	* DRAWINGS ON FILE AT SI OFFICE	
		Automated ultrasonic detection and characterization scan of blade attachments		NDE	H	[redacted]	*	
		Review NDE test results		NDE	W	[redacted]/TIC [redacted]	*	
		Determine need for remaining life assessment		Vis	H	[redacted]/TIC [redacted]	*	
4.	Rotor Bore Plug Installation	Machine replacement bore plug. ~~0.001~~ .0015" per inch diameter interference fit.		Dim	H	[redacted]	*	
		Ensure correct interference fit		Dim	R	[redacted]/TIC [redacted]	*	
		FME inspection rotor bore		Vis	W	[redacted]/TIC [redacted]	*	
		Purge rotor bore with ~~nitrogen~~ AZ906. Remove all traces of moisture from rotor bore.		Vis	W	[redacted]/TIC [redacted]	*	

Inspection Requirements Legend:

	H – Hold Point	W – Witness Point	R – Review Documentation		* - Signature Required
Test Activity	Vis – Visual Inspection	Dim – Dimensional Inspection	Doc – Review documents	NDT – Non Destructive Testing	Outage Start Date:
Inspect^n by	TIC – TIC PM or Engineer	Sup – Labor Supervisor	NDT – NDT Contractor	C – Customer personnel	Other – Specify group

Copyright © 2009 Toshiba International Corporation. All rights reserved.

IP7018091

TOSHIBA Leading Innovation >>>	INSPECTION AND TEST PLAN	LPB ROTOR	
Written by: TIC	INTERMOUTAIN POWER	Outage Date: Oct. 2010	Rev: A
Preliminary Approved by: T. Suzuki/D. Haag / C. Klein. N.Kitaguchi / J.Radish/	LP TURBINE L-0 BLADE REPLACEMENT		Revision Date: 28 September 2010

Task No.	Process Description	Inspection Activity	Control Procedure / Support Documents	Inspection Requirements:			Document / Signature	Records Complete Sign-off
				Test Activity	H/W/R	Inspect by		
		Shrink bore plug ensure clearance exists between plug and rotor		Dim	R	[redacted]	*	DB 10-27
		Install bore plug and clamp in place		Dim	R	[redacted]	*	DB 10-27

Inspection Requirements Legend:

	H – Hold Point	W – Witness Point	R – Review Documentation		* - Signature Required
Test Activity	Vis – Visual Inspection	Dim – Dimensional Inspection	Doc – Review documents	NDT – Non Destructive Testing	Outage Start Date:
Inspect^n by	TIC – TIC PM or Engineer	Sup – Labor Supervisor	NDT – NDT Contractor	C – Customer personnel	Other – Specify group

Copyright © 2009 Toshiba International Corporation. All rights reserved.

IP7018092

TOSHIBA Leading Innovation >>>	INSPECTION AND TEST PLAN	LPB ROTOR	
Written by: TIC	INTERMOUTAIN POWER	Outage Date: Oct. 2010	Rev: B
Preliminary Approved by: T. Suzuki/D. Haag / C. Klein. N.Kitaguchi / J.Radish/	LP TURBINE L-0 BLADE REPLACEMENT		Revision Date: 21 October 2010

Task No.	Process Description	Inspection Activity	Control Procedure / Support Documents	Inspection Requirements: Test Activity	H/W/R	Inspect by	Document / Signature	Records Complete Sign-off
Blade Removal								
1.	Measure L-0 blade diameter	Measure blade diameter with pie tape.		Dim	R	Sup/TIC	Dual Flow LSB Diameter Record	JC 10-22-10 CHK 10-22-10
2.	Remove Blade Pins	Apply Peening hammer to all pins to ensure movement.	KMS16021-d	Vis	W	Sup	*	JC 10-22-10
		Do not remove the bottom pin. Ensure that bottom pin moves	KMS16021-d	Vis	R	Sup	*	JC 10-22-10
		For Pins that did not move apply Hilti Gun.	KMS16021-d	Vis	R	Sup	*	JC 10-22-10
		Measure the blade pin after removal.	KM SI5021-c	Dim	R	Sup/TIC	*PC-R6064-c	JC 10-22-10 CHK 10-22-10
		Evaluate the number of pins on a wheel that did not move. Determine potential need for machining entire blade row or apply contingency drilling procedure to pins that did not move.	KMS16021-d	Vis	R	Sup/TIC / [redacted]	N/A * ALL PINS MOVED	JC 10-22-10 CHK 10-22-10 10/22/10
		Adjust the jig length for the pin removal.	KMS16021-d	Vis	W	Sup	*	JC 10-22-10
		Push the pin with the peening hammer.	KMS16021-d	Vis	W	Sup	*	JC 10-22-10

Inspection Requirements Legend:

	H – Hold Point	W – Witness Point	R – Review Documentation		* - Signature Required	
Test Activity	Vis – Visual Inspection	Dim – Dimensional Inspection	Doc – Review documents	NDT – Non Destructive Testing	Outage Start Date:	
Inspect^{n} by	TIC – TIC PM or Engineer	Sup – Labor Supervisor	NDT – NDT Contractor	C – Customer personnel	Other – Specify group	

Copyright © 2009 Toshiba International Corporation. All rights reserved.

IP7018093

TOSHIBA Leading Innovation >>>	INSPECTION AND TEST PLAN	LPB ROTOR	
Written by: TIC	INTERMOUTAIN POWER	Outage Date: Oct. 2010	Rev: B
Preliminary Approved by: T. Suzuki/D. Haag / C. Klein. N.Kitaguchi / J.Radish/	LP TURBINE L-0 BLADE REPLACEMENT		Revision Date: 21 October 2010

Task No.	Process Description	Inspection Activity	Control Procedure / Support Documents	Inspection Requirements: Test Activity	H/W/R	Inspect by	Document / Signature	Records Complete Sign-off
		Once the pin starts moving, use the appropriate length "removal" pin and keep hitting the pin face with the peening hammer.	KMS16021-d	Vis	W	Sup	*	SK 10-22-10 cl
3.	Remove shrouds	Separate shroud block with wedge		Vis	W	Sup		SK 10-22-10
		Cut suction side dimples with cut off tool.		Vis	W	Sup		SK 10-22-10
		Cut shroud blocks with cut off tool		Vis	W	Sup		SK 10-22-10
4.	Remove blades and store	Remove old blades and neatly store in IPSC provided crates.		Vis	W	Sup	*	SK 10-22-10

Inspection Requirements Legend:

	H – Hold Point	W – Witness Point	R – Review Documentation		* - Signature Required
Test Activity	Vis – Visual Inspection	Dim – Dimensional Inspection	Doc – Review documents	NDT – Non Destructive Testing	Outage Start Date:
Inspect^{n} by	TIC – TIC PM or Engineer	Sup – Labor Supervisor	NDT – NDT Contractor	C – Customer personnel	Other – Specify group

Copyright © 2009 Toshiba International Corporation. All rights reserved.

IP7018094

TOSHIBA Leading Innovation >>>	INSPECTION AND TEST PLAN	LPB ROTOR	
Written by: TIC	INTERMOUTAIN POWER	Outage Date: Oct. 2010	Rev: B
Preliminary Approved by: T. Suzuki/D. Haag / C. Klein. N.Kitaguchi / J.Radish/	LP TURBINE L-0 BLADE REPLACEMENT		Revision Date: 21 October 2010

Task No.	Process Description	Inspection Activity	Control Procedure / Support Documents	Inspection Requirements: Test Activity	H/W/R	Inspect by	Document / Signature	Records Complete Sign-off
New Blade Assembly								
1.	Install Blades	Assemble new blades onto wheel using temporary pins. Inner radial temporary pin is inserted from the inlet side of the wheel and the outer radial temporary pin is inserted from the outlet side of the wheel.	PRC SIL99004-a	Vis	R	Sup	*	J Radish 10.28.10 JK 10-28-10 JIC 10-28-10
		Assemble the blade cover piece and sleeve.	PRC SIL99004-a	Vis	R	Sup/TIC	*	J Radish 10-28-10 10/28/10
		After temporary pins are installed, insert 0.07mm shim between the assembled blade and the adjacent pinned blade.	PRC SIL99004-a	Vis	R	Sup/TIC	*	CHK 10-29-2011 JIC 10-28-10
		Check the tongue contact	PRC SIL99004-a	Vis	R	Sup/TIC	*	CHK 10-22-2011 JIC 102810
		Check the open pin hole concentricity. (Blade radial check is not required)	PRC SIL99004-a	Vis	R	Sup/TIC	*	CHK 10-29-2010 JIC 10-28-10
		Quick check clearance of cover segment, sleeve and blades.	PRC SIL99004-a	Dim	R	Sup/TIC	* KF CRSNRA 503-A KF CRSNRA 501-B KF CRSNRA 502-C	CHK 10-29-2010 JK 10-28-10

Inspection Requirements Legend:

	H – Hold Point	W – Witness Point	R – Review Documentation		* - Signature Required
Test Activity	Vis – Visual Inspection	Dim – Dimensional Inspection	Doc – Review documents	NDT – Non Destructive Testing	Outage Start Date:
Inspect^{n} by	TIC – TIC PM or Engineer	Sup – Labor Supervisor	NDT – NDT Contractor	C – Customer personnel	Other – Specify group

Copyright © 2009 Toshiba International Corporation. All rights reserved.

IP7018095

TOSHIBA Leading Innovation >>>	INSPECTION AND TEST PLAN	LPB ROTOR	
Written by: TIC	INTERMOUTAIN POWER	Outage Date: Oct. 2010	Rev: B
Preliminary Approved by: T. Suzuki/D. Haag / C. Klein. N.Kitaguchi / J.Radish/	LP TURBINE L-0 BLADE REPLACEMENT		Revision Date: 21 October 2010

Task No.	Process Description	Inspection Activity	Control Procedure / Support Documents	Inspection Requirements: Test Activity	H/W/R	Inspect by	Document / Signature	Records Complete Sign-off
2.	Install Pins	Ream the open hole (zero reaming and oversize reaming) with the hand-held pneumatic drill.	PRC SIL99016-a	H	R	Sup	* 中村	JK 10-29-10
		Use machine oil or coolant for lubrication Lubrication to contain less than 1 PPM sulfur and be chlorine free.	PRC SIL99016-a	H	R	Sup	* 中村	JK 10-29-10
		Clean the hole of any burrs or filings	PRC SIL99016-a	H	W	Sup	* 中村	JK 10-29-10
		Insert the new blade pins in the middle position first. Use Lubrication oil GS RUB 105, Castor Oil or equivalent on final pins if too hard to insert.	PRC SIL99016-a	H	W	Sup	* 中村	JK 10-29-10
		Remove bottom temporary pins and repeat first step of Task 2 with final pins.	PRC SIL99016-a	H	W	Sup	* 中村	JK 10-29-10
		Remove top temporary pins and repeat first step of Task 2 with final pins.	PRC SIL99016-a	H	W	Sup	* 中村	JK 10-29-10
		Complete pinning quality record. Measure pin diameter.	PRC SIL99016-a	Dim	R	Sup/TIC	PC-6064-c 中村	JK 10-29-10 OHK 10-29-2010

Inspection Requirements Legend:

	H – Hold Point	W – Witness Point	R – Review Documentation		* - Signature Required
Test Activity	Vis – Visual Inspection	Dim – Dimensional Inspection	Doc – Review documents	NDT – Non Destructive Testing	Outage Start Date:
Inspect^{n} by	TIC – TIC PM or Engineer	Sup – Labor Supervisor	NDT – NDT Contractor	C – Customer personnel	Other – Specify group

Copyright © 2009 Toshiba International Corporation. All rights reserved.

IP7018096

TOSHIBA Leading Innovation >>>	INSPECTION AND TEST PLAN	LPB ROTOR	
Written by: TIC	INTERMOUTAIN POWER	Outage Date: Oct. 2010	Rev: B
Preliminary Approved by: T. Suzuki/D. Haag / C. Klein. N.Kitaguchi / J.Radish/	LP TURBINE L-0 BLADE REPLACEMENT		Revision Date: 21 October 2010

Task No.	Process Description	Inspection Activity	Control Procedure / Support Documents	Inspection Requirements: Test Activity	H/W/R	Inspect by	Document / Signature	Records Complete Sign-off
3.	Caulk Cover Segments	Caulking of the inlet side of the cover requires manual support applied at the outlet side of the blade cover by a jig and steel bar tool and hydraulic jack.	PRC-SIL99017-a	Vis	H	Sup	* 中村	J RADISH 11-1-10
		Check clearance between each cover segment and bucket tip.	PRC-SIL99017-a Assembling drawing (document number TBD)	Dim	R	Sup/TIC	* KF CRSNRA501-~~B~~ C 中村	J RADISH 11-1-10 TE J RADISH 11-1-10 GE
		Inspect clearance between sleeve and boss. DONE AT BUCKET ASSEMBLY	PRC-SIL99017-a	Dim	R	Sup/TIC /[redacted]	* KF CRSNRA502-C 中村	CHK 10-30-2010 10-30-10
		Inspect maximum clearance between each pair of bucket dovetail and radial surface. DONE AT BUCKET ASSEMBLY	PRC-SIL99017-a	Dim	R	Sup/TIC	* ~~KF CRSNRA503-A~~ CHK 10-30-2010 中村	CHK 10-30-2010 10-30-10
		Inspect clearance between each dovetail. DONE AT BUCKET ASSEMBLY	PRC-SIL99017-a	Dim	R	Sup/TIC /[redacted]	* KF CRSNRA503-A 中村	CHK 10-30-2010 10-30-10
		Caulk pressure side tenon with zero clearance between cover and blade.	PRC-SIL99017-a	Vis	W	Sup/TIC /[redacted]	* 中村	JR 11-1-10 CHK 11-1-2010
		Caulk suction side dimples with 0.4 mm clearance between cover and blade.	PRC-SIL99017-a	Vis	W	Sup/TIC /[redacted]	* 中村	JR 11-1-10 CHK 11-1-2010

Inspection Requirements Legend:

	H – Hold Point	W – Witness Point	R – Review Documentation		* - Signature Required
Test Activity	Vis – Visual Inspection	Dim – Dimensional Inspection	Doc – Review documents	NDT – Non Destructive Testing	Outage Start Date:
Inspect^{n} by	TIC – TIC PM or Engineer	Sup – Labor Supervisor	NDT – NDT Contractor	C – Customer personnel	Other – Specify group

Copyright © 2009 Toshiba International Corporation. All rights reserved.

IP7018097

TOSHIBA Leading Innovation >>>	INSPECTION AND TEST PLAN	LPB ROTOR	
Written by: TIC	INTERMOUTAIN POWER	Outage Date: Oct. 2010	Rev: B
Preliminary Approved by: T. Suzuki/D. Haag / C. Klein. N.Kitaguchi / J.Radish/	LP TURBINE L-0 BLADE REPLACEMENT		Revision Date: 21 October 2010

Task No.	Process Description	Inspection Activity	Control Procedure / Support Documents	Inspection Requirements: Test Activity	H/W/R	Inspect by	Document / Signature	Records Complete Sign-off
		Penetrant test caulked tenons and dimples. Confirm there is no scratch marks on caulked tenons. Any scratch marks shall be removed. Penetrant test caulked tenons and dimples by blading technician	PRC-SIL99017-a	NDT	W	Sup/TIC / [redacted]	*	CWK 11-1-2010
		Complete quality record and record clearance between covers and blade.		DIM	R	Sup/TIC / [redacted]	* KF CRSNRA501-B	J RADISH 11-1-10.
4.	Measure L-0 blade diameter	Measure blade diameter with pie tape.		Dim	R	Sup/TIC / [redacted]	Dual Flow LSB Diameter Record	J RADISH 11-1-10 TE & GE.

5. STAKE PINS 2 PLACES EACH SIDE — SUP/TIC/CLIENT — CWK 11-2-2010 — 11-2-10

Inspection Requirements Legend:

	H – Hold Point	W – Witness Point	R – Review Documentation		* - Signature Required
Test Activity	Vis – Visual Inspection	Dim – Dimensional Inspection	Doc – Review documents	NDT – Non Destructive Testing	Outage Start Date:
Inspect^{n} by	TIC – TIC PM or Engineer	Sup – Labor Supervisor	NDT – NDT Contractor	C – Customer personnel	Other – Specify group

Copyright © 2009 Toshiba International Corporation. All rights reserved.

IP7018098

TOSHIBA Leading Innovation >>>	INSPECTION AND TEST PLAN	LPB ROTOR	
Written by: TIC	INTERMOUTAIN POWER	Outage Date: Oct. 2010	Rev: B
Preliminary Approved by: T. Suzuki/D. Haag / C. Klein. N.Kitaguchi / J.Radish/	LP TURBINE L-0 BLADE REPLACEMENT		Revision Date: 21 October 2010

Task No.	Process Description	Inspection Activity	Control Procedure / Support Documents	Inspection Requirements:			Document / Signature	Records Complete Sign-off
Slow Speed Balance								
1	Slow Speed Balance	Set up low speed balance machine per ReGENco instructions.	DOC000466-05 DOC000467-05 DOC000468-05	Doc	R	Sup	*	
		Set Up rotor in slow speed balance machine	DOC000466-05	Dim	H	Sup	*	
		Inspect rotor runouts and journal condition. Report out of specification conditions and required corrective measures.	DOC000466-05	Vis	H	Sup	*	
		Set up vibration measurement and data acquisition instrumentation an Easy Balance 2.2 data acquisition unit.	DOC000466-05	Vis	W	Sup	*	
		Slow Roll rotor prior to balance runs.	DOC000466-05	Vis	H	Sup	*	
		Balance run limit at pedestal <0.9 grams-inch per pound of rotor.	DOC000466-05	Dim	H	Sup	*	

Inspection Requirements Legend:

	H – Hold Point	W – Witness Point	R – Review Documentation		* - Signature Required
Test Activity	Vis – Visual Inspection	Dim – Dimensional Inspection	Doc – Review documents	NDT – Non Destructive Testing	Outage Start Date:
Inspect^{n} by	TIC – TIC PM or Engineer	Sup – Labor Supervisor	NDT – NDT Contractor	C – Customer personnel	Other – Specify group

Copyright © 2009 Toshiba International Corporation. All rights reserved.

IP7018099

TOSHIBA Leading Innovation >>>	INSPECTION AND TEST PLAN	LPB ROTOR	
Written by: TIC	INTERMOUTAIN POWER	Outage Date: Oct. 2010	Rev: B
Preliminary Approved by: T. Suzuki/D. Haag / C. Klein. N.Kitaguchi / J.Radish/	LP TURBINE L-0 BLADE REPLACEMENT		Revision Date: 21 October 2010

Task No.	Process Description	Inspection Activity	Control Procedure / Support Documents	Inspection Requirements:			Document / Signature	Records Complete Sign-off
		Final Balance acceptance criteria in compliance with ISO1940/1 standards G 2.5 grades.	DOC000466-05	Vis	H	Sup/TIC/ [redacted]	*	11-4-10 CHK 11-4-2010
		Lock Balance weights	DOC000466-05	Vis	H	Sup	*	
		Independent verification of locked balance weights.	DOC000466-05	Vis	W	Sup/TIC/ [redacted]	*	11-4-10 CHK 11-4-2010 11-4-10

Inspection Requirements Legend:

	H – Hold Point	W – Witness Point	R – Review Documentation		* - Signature Required
Test Activity	Vis – Visual Inspection	Dim – Dimensional Inspection	Doc – Review documents	NDT – Non Destructive Testing	Outage Start Date:
Inspect^{n} by	TIC – TIC PM or Engineer	Sup – Labor Supervisor	NDT – NDT Contractor	C – Customer personnel	Other – Specify group

Copyright © 2009 Toshiba International Corporation. All rights reserved.

IP7018100

TOSHIBA Leading Innovation >>>	INSPECTION AND TEST PLAN	LPB ROTOR	
Written by: TIC	INTERMOUTAIN POWER	Outage Date: Oct. 2010	Rev: B
Preliminary Approved by: T. Suzuki/D. Haag / C. Klein. N.Kitaguchi / J.Radish/	LP TURBINE L-0 BLADE REPLACEMENT		Revision Date: 21 October 2010

Task No.	Process Description	Inspection Activity	Control Procedure / Support Documents	Inspection Requirements: Test Activity	H/W/R	Inspect by	Document / Signature	Records Complete Sign-off
Post-outage Walk down								
1.	Walk down TIC work area	All tooling and equipment demobilized		Vis	W	Sup/TIC /[redacted]	*CLK	D.S.
		Tooling and equipment to be left on site stored per Client direction		Vis	W	Sup/TIC /[redacted]	*CLK	D.S.
		Floors swept		Vis	W	Sup/TIC /[redacted]	*CLK	D.S.
		Trash removed		Vis	W	Sup/TIC /[redacted]	*CLK	D.S.
		Old blades left with Client		Vis	W	Sup/TIC /[redacted]	*CLK	D.S.
		Empty blade boxes left with Client for IPSC1 outage		Vis	W	Sup/TIC /[redacted]	*CLK	D.S.
		Office trailer locked and one set of keys turned over to IPSC Contract Administrator		Vis	W	Sup/TIC /[redacted]	*CLK	D.S.

Inspection Requirements Legend:

	H – Hold Point	W – Witness Point	R – Review Documentation		* - Signature Required
Test Activity	Vis – Visual Inspection	Dim – Dimensional Inspection	Doc – Review documents	NDT – Non Destructive Testing	Outage Start Date:
Inspect by	TIC – TIC PM or Engineer	Sup – Labor Supervisor	NDT – NDT Contractor	C – Customer personnel	Other – Specify group

Copyright © 2009 Toshiba International Corporation. All rights reserved.

IP7018101

TOSHIBA Leading Innovation >>>	INSPECTION AND TEST PLAN	LPC ROTOR	
Written by: TIC	INTERMOUTAIN POWER	Outage Date: Oct. 2010	Rev: A
Preliminary Approved by: T. Suzuki/D. Haag / C. Klein. N.Kitaguchi / J.Radish/	LP TURBINE L-0 BLADE REPLACEMENT		Revision Date: 28 September 2010

Task No.	Process Description	Inspection Activity	Control Procedure / Support Documents	Inspection Requirements: Test Activity	H/W/R	Inspect by	Document / Signature	Records Complete Sign-off
Pre-outage setup								
1.	Site pre outage walk down	Scaffolding and staging set up		Vis	W	Sup/TIC / [redacted]	*	
		Rotor Skids staged		Vis	W	Sup/TIC / [redacted]	*	
		Lathe set up		Vis	W	Sup/TIC / [redacted]	SETUP LATER IN PROCESS	CHK
		Tooling on site		Vis	W	Sup/TIC / [redacted]	*	CHK TIC
		Temporary power		Vis	W	Sup/TIC / [redacted]	*	CHK TIC
		Walkways clear		Vis	W	Sup/TIC / [redacted]	*	

Inspection Requirements Legend:

	H – Hold Point	W – Witness Point	R – Review Documentation		* - Signature Required	Page: 1 of 20
Test Activity	Vis – Visual Inspection	Dim – Dimensional Inspection	Doc – Review documents	NDT – Non Destructive Testing	Outage Start Date:	
Inspect'n by	TIC – TIC PM or Engineer	Sup – Labor Supervisor	NDT – NDT Contractor	C – Customer personnel	Other – Specify group	

Copyright © 2009 Toshiba International Corporation. All rights reserved.

IP7018102

TOSHIBA Leading Innovation >>>	INSPECTION AND TEST PLAN	LPC ROTOR	
Written by: TIC	INTERMOUTAIN POWER	Outage Date: Oct. 2010	Rev: A
Preliminary Approved by: T. Suzuki/D. Haag / C. Klein. N.Kitaguchi / J.Radish/	LP TURBINE L-0 BLADE REPLACEMENT		Revision Date: 28 September 2010

Task No.	Process Description	Inspection Activity	Control Procedure / Support Documents	Inspection Requirements:			Document / Signature	Records Complete Sign-off
				Test Activity	H/W/R	Inspect by		
IPSC activities, Rotor NDE, L-0 Dovetail Glass Bead Blast and NDE								
1.	Soak pins with penetrating oil	Perform before rotor removed from turbine to allow time for oil to penetrate		Vis	H	[redacted]	*	10/21/10
2.	Rotor Runout	With rotor in bearings and uncoupled perform rotor runout checks before removing rotor from machine.		Dim	H	[redacted]/ TIC	* FPC-2014	10/22/10 10/22/10
3.	Rotor Periphery MT	VT and MT rotor periphery		NDE	H	[redacted]	*	
		Degauss rotor after completion of test.		Vis	H	[redacted]	*	
		Review NDE results		NDE	W	[redacted]/ TIC	*	
4.	Glass Bead Blast L-0 Blade Dovetails	Utilize #6 or 70 Gauge glass bead media.		Vis	W	[redacted]	*	

Inspection Requirements Legend:

	H – Hold Point	W – Witness Point	R – Review Documentation		* - Signature Required
Test Activity	Vis – Visual Inspection	Dim – Dimensional Inspection	Doc – Review documents	NDT – Non Destructive Testing	Outage Start Date:
Inspect^{n} by	TIC – TIC PM or Engineer	Sup – Labor Supervisor	NDT – NDT Contractor	C – Customer personnel	Other – Specify group

Copyright © 2009 Toshiba International Corporation. All rights reserved.

IP7018103

TOSHIBA Leading Innovation >>>	INSPECTION AND TEST PLAN	LPC ROTOR	
Written by: TIC	INTERMOUTAIN POWER	Outage Date: Oct. 2010	Rev: A
Preliminary Approved by: T. Suzuki/D. Haag / C. Klein. N.Kitaguchi / J.Radish/	LP TURBINE L-0 BLADE REPLACEMENT		Revision Date: 28 September 2010

Task No.	Process Description	Inspection Activity	Control Procedure / Support Documents	Inspection Requirements: Test Activity	H/W/R	Inspect by	Document / Signature	Records Complete Sign-off
		Almen Gauge Test to be conducted start of each shift to verify nozzle velocity. Check nozzle opening for obstruction and check pressure setting to ensure desired mixture ratio at start of each shift.		Vis	H	[redacted]	* MIDWEST TURBINE NOZZLE CHECK PRECORDED	
		Provide containment for L-0 wheels. Ensure 100% containment of blast media		Vis	H	[redacted]	* PERFORMED IN DUST BLAST SHACK LSB'S REMOVED	
		Recover glass bead material with vacuum kit.		Vis	H	[redacted]	* "	"
		Glass bead blast TE and GE L-0 wheels and dovetails.		Vis	W	[redacted]	*	10-29-10
		Verify all scale, oxides, and deposits have been removed from L-0 Groove profile.		Vis	H	[redacted] TIC	*	CJK 10-29-10 10-29-10
5.	L-0 MT Inspection	VT and MT TE and GE L-0 wheels and dovetails.		NDE	H	[redacted]	*	
		Degauss rotor after completion of test.		Vis	H	[redacted]	*	
		Review NDE results		NDE	W	[redacted] TIC	*	

Inspection Requirements Legend:

	H – Hold Point	W – Witness Point	R – Review Documentation		* - Signature Required
Test Activity	Vis – Visual Inspection	Dim – Dimensional Inspection	Doc – Review documents	NDT – Non Destructive Testing	Outage Start Date:
Inspect^{n} by	TIC – TIC PM or Engineer	Sup – Labor Supervisor	NDT – NDT Contractor	C – Customer personnel	Other – Specify group

Copyright © 2009 Toshiba International Corporation. All rights reserved.

IP7018104

TOSHIBA Leading Innovation >>>	INSPECTION AND TEST PLAN	LPC ROTOR	
Written by: TIC	INTERMOUTAIN POWER	Outage Date: Oct. 2010	Rev: A
Preliminary Approved by: T. Suzuki/D. Haag / C. Klein. N.Kitaguchi / J.Radish/	LP TURBINE L-0 BLADE REPLACEMENT		Revision Date: 28 September 2010

Task No.	Process Description	Inspection Activity	Control Procedure / Support Documents	Inspection Requirements:			Document / Signature	Records Complete Sign-off
				Test Activity	H/W/R	Inspect by		
LP Rotor Bore/Phase Array Inspection Activities (Structural Integrity)								
1.	Bore Plug Removal	Identify end for removal TE		Vis	H	[redacted]/TIC	*	CWF 10-27-2010 DB 10-26
		Remove rotor bore plug		Vis	H	[redacted]	*	DB 10-26
2.	Rotor Bore inspection	Inspect rotor bore surface		Vis	H	[redacted]	*	[signature]
		Measure rotor bore		Dim	H	[redacted]	*	[signature]
		Hone Rotor Bore		Vis	H	[redacted]	*	[signature]
		Measure rotor bore		Dim	H	[redacted]	*	[signature]
		Visual inspection honed bore surface	To be completed after Bore Inspection	Vis	W	[redacted]/TIC	*	[signature] 10/27/10
		Perform eddy current and ultrasonic inspection of bore		NDE	H	[redacted]	*	[signature]
		Clean rotor bore		Vis	H	[redacted]	*	[signature]
		Review NDE test results		NDE	W	[redacted]/TIC	*	[signature]
		Determine need for remaining life assessment		Vis	H	[redacted]/TIC	* SU	[signature]

Inspection Requirements Legend:

	H – Hold Point	W – Witness Point	R – Review Documentation		* - Signature Required
Test Activity	Vis – Visual Inspection	Dim – Dimensional Inspection	Doc – Review documents	NDT – Non Destructive Testing	Outage Start Date:
Inspect^n by	TIC – TIC PM or Engineer	Sup – Labor Supervisor	NDT – NDT Contractor	C – Customer personnel	Other – Specify group

Copyright © 2009 Toshiba International Corporation. All rights reserved.

IP7018105

TOSHIBA Leading Innovation >>>	INSPECTION AND TEST PLAN	LPC ROTOR	
Written by: TIC	INTERMOUTAIN POWER	Outage Date: Oct. 2010	Rev: A
Preliminary Approved by: T. Suzuki/D. Haag / C. Klein. N.Kitaguchi / J.Radish/	LP TURBINE L-0 BLADE REPLACEMENT		Revision Date: 28 September 2010

Task No.	Process Description	Inspection Activity	Control Procedure / Support Documents	Inspection Requirements:			Document / Signature	Records Complete Sign-off
				Test Activity	H/W/R	Inspect by		
3.	Rotor Blade attachment inspection L-1, L-2, and L-3	Determine disk geometry for each stage		Vis	H	[redacted]	*	[illegible]
		Prepare digital drawing of each stage	DRAWINGS ON FILE AT SI.	NDE	H	[redacted]	*	NA
		Automated ultrasonic detection and characterization scan of blade attachments		NDE	H	[redacted]	*	[illegible]
		Review NDE test results		NDE	W	[redacted]/TIC [redacted]	*	[illegible]
		Determine need for remaining life assessment		Vis	H	[redacted]/TIC [redacted]	* SD	[illegible]
4.	Rotor Bore Plug Installation	Machine replacement bore plug. ~~.0001"~~ per inch diameter interference fit. .0015		Dim	H	[redacted]	*	[illegible] MB
		Ensure correct interference fit		Dim	R	[redacted]/TIC [redacted]	*	[illegible] MB 10/27/10
		FME inspection rotor bore		Vis	W	[redacted]/TIC [redacted]	*	[illegible] MB 10/27/10
		Purge rotor bore with ~~nitrogen~~ argon. Remove all traces of moisture from rotor bore.		Vis	W	[redacted]/TIC [redacted]	*	CLK 10-27-10 [illegible] 10-27-10

Inspection Requirements Legend:

	H – Hold Point	W – Witness Point	R – Review Documentation		* - Signature Required
Test Activity	Vis – Visual Inspection	Dim – Dimensional Inspection	Doc – Review documents	NDT – Non Destructive Testing	Outage Start Date:
Inspect^n by	TIC – TIC PM or Engineer	Sup – Labor Supervisor	NDT – NDT Contractor	C – Customer personnel	Other – Specify group

Copyright © 2009 Toshiba International Corporation. All rights reserved.

IP7018106

TOSHIBA Leading Innovation >>>	INSPECTION AND TEST PLAN	LPC ROTOR	
Written by: TIC	INTERMOUTAIN POWER	Outage Date: Oct. 2010	Rev: A
Preliminary Approved by: T. Suzuki/D. Haag / C. Klein. N.Kitaguchi / J.Radish/	LP TURBINE L-0 BLADE REPLACEMENT		Revision Date: 28 September 2010

Task No.	Process Description	Inspection Activity	Control Procedure / Support Documents	Inspection Requirements:			Document / Signature	Records Complete Sign-off
				Test Activity	H/W/R	Inspect by		
		Shrink bore plug ensure clearance exists between plug and rotor		Dim	R	[redacted]	*	MB 10-27
		Install bore plug and clamp in place		Dim	R	[redacted]	*	MB 10-27

Inspection Requirements Legend:

	H – Hold Point	W – Witness Point	R – Review Documentation		* - Signature Required
Test Activity	Vis – Visual Inspection	Dim – Dimensional Inspection	Doc – Review documents	NDT – Non Destructive Testing	Outage Start Date:
Inspect[n] by	TIC – TIC PM or Engineer	Sup – Labor Supervisor	NDT – NDT Contractor	C – Customer personnel	Other – Specify group

Copyright © 2009 Toshiba International Corporation. All rights reserved.

IP7018107

TOSHIBA Leading Innovation >>>	INSPECTION AND TEST PLAN	LPC ROTOR	
Written by: TIC	INTERMOUTAIN POWER	Outage Date: Oct. 2010	Rev: B
Preliminary Approved by: T. Suzuki/D. Haag / C. Klein. N.Kitaguchi / J.Radish/	LP TURBINE L-0 BLADE REPLACEMENT		Revision Date: 22 October 2010

Task No.	Process Description	Inspection Activity	Control Procedure / Support Documents	Inspection Requirements: Test Activity	H/W/R	Inspect by	Document / Signature	Records Complete Sign-off
Blade Removal								
1.	Measure L-0 blade diameter	Measure blade diameter with pie tape.		Dim	R	Sup/TIC	Dual Flow LSB Diameter Record	10/22/10 JK 10-22-10
2.	Remove Blade Pins	Apply Peening hammer to all pins to ensure movement.	KMS16021-d	Vis	W	Sup	*	JK 10-23-10
		Do not remove the bottom pin. Ensure that bottom pin moves	KMS16021-d	Vis	R	Sup	*	JK 10-23-10
		For Pins that did not move apply Hilti Gun.	KMS16021-d	Vis	R	Sup	* All pins moved	N/A
		Measure the blade pin after removal.	KM SI5021-c	Dim	R	Sup/TIC	*PC-R6064-c	JK 10-23-10
		Evaluate the number of pins on a wheel that did not move. Determine potential need for machining entire blade row or apply contingency drilling procedure to pins that did not move.	KMS16021-d	Vis	R	Sup/TIC /[redacted]	* All pins moved	10/22/10 JK-10-23-10 10/24/10
		Adjust the jig length for the pin removal.	KMS16021-d	Vis	W	Sup	*	JK 10-23-10
		Push the pin with the peening hammer.	KMS16021-d	Vis	W	Sup	*	JK 10-23-10

Inspection Requirements Legend:

	H – Hold Point	W – Witness Point	R – Review Documentation		* - Signature Required	
Test Activity	Vis – Visual Inspection	Dim – Dimensional Inspection	Doc – Review documents	NDT – Non Destructive Testing	Outage Start Date:	
Inspect^n by	TIC – TIC PM or Engineer	Sup – Labor Supervisor	NDT – NDT Contractor	C – Customer personnel	Other – Specify group	

Copyright © 2009 Toshiba International Corporation. All rights reserved.

IP7018108

TOSHIBA Leading Innovation >>>	INSPECTION AND TEST PLAN	LPC ROTOR	
Written by: TIC	INTERMOUTAIN POWER	Outage Date: Oct. 2010	Rev: B
Preliminary Approved by: T. Suzuki/D. Haag / C. Klein. N.Kitaguchi / J.Radish/	LP TURBINE L-0 BLADE REPLACEMENT		Revision Date: 22 October 2010

Task No.	Process Description	Inspection Activity	Control Procedure / Support Documents	Inspection Requirements: Test Activity	H/W/R	Inspect by	Document / Signature	Records Complete Sign-off
		Once the pin starts moving, use the appropriate length "removal" pin and keep hitting the pin face with the peening hammer.	KMS16021-d	Vis	W	Sup	*	JK 10-23-10
3.	Remove shrouds	Separate shroud block with wedge		Vis	W	Sup		JK 10-23-10
		Cut suction side dimples with cut off tool.		Vis	W	Sup		JK-10-23-10
		Cut shroud blocks with cut off tool		Vis	W	Sup		JK 10-23-10
4.	Remove blades and store	Remove old blades and neatly store in IPSC provided crates.		Vis	W	Sup	*	JK 10-23-10

Inspection Requirements Legend:

	H – Hold Point	W – Witness Point	R – Review Documentation		* - Signature Required
Test Activity	Vis – Visual Inspection	Dim – Dimensional Inspection	Doc – Review documents	NDT – Non Destructive Testing	Outage Start Date:
Inspect^n by	TIC – TIC PM or Engineer	Sup – Labor Supervisor	NDT – NDT Contractor	C – Customer personnel	Other – Specify group

Copyright © 2009 Toshiba International Corporation. All rights reserved.

IP7018109

TOSHIBA Leading Innovation >>>	INSPECTION AND TEST PLAN	LPC ROTOR	
Written by: TIC	INTERMOUTAIN POWER	Outage Date: Oct. 2010	Rev: B
Preliminary Approved by: T. Suzuki/D. Haag / C. Klein. N.Kitaguchi / J.Radish/	LP TURBINE L-0 BLADE REPLACEMENT		Revision Date: 22 October 2010

Task No.	Process Description	Inspection Activity	Control Procedure / Support Documents	Inspection Requirements: Test Activity	H/W/R	Inspect by	Document / Signature	Records Complete Sign-off
New Blade Assembly								
1.	Install Blades	Assemble new blades onto wheel using temporary pins. Inner radial temporary pin is inserted from the inlet side of the wheel and the outer radial temporary pin is inserted from the outlet side of the wheel.	PRC SIL99004-a	Vis	R	Sup	*	JK 10-30-10
		Assemble the blade cover piece and sleeve.	PRC SIL99004-a	Vis	R	Sup/TIC	*	JK 10-30-10 CHK 10-30-2010
		After temporary pins are installed, insert 0.07mm shim between the assembled blade and the adjacent pinned blade.	PRC SIL99004-a	Vis	R	Sup/TIC	*	JK 10-30-10 CHK 10-30-2010
		Check the tongue contact	PRC SIL99004-a	Vis	R	Sup/TIC	*	JK 10-30-10 CHK 10-30-2010
		Check the open pin hole concentricity. (Blade radial check is not required)	PRC SIL99004-a	Vis	R	Sup/TIC	*	JK 10-30-10 CHK 10-30-2010
		Quick check clearance of cover segment, sleeve and blades.	PRC SIL99004-a	Dim	R	Sup/TIC	* KF CRSNRA 503-A KF CRSNRA 501-B KF CRSNRA 502-C	JK 10-30-10 CHK 10-30-2010

Inspection Requirements Legend:

	H – Hold Point	W – Witness Point	R – Review Documentation		* - Signature Required
Test Activity	Vis – Visual Inspection	Dim – Dimensional Inspection	Doc – Review documents	NDT – Non Destructive Testing	Outage Start Date:
Inspect^n by	TIC – TIC PM or Engineer	Sup – Labor Supervisor	NDT – NDT Contractor	C – Customer personnel	Other – Specify group

Copyright © 2009 Toshiba International Corporation. All rights reserved.

IP7018110

TOSHIBA Leading Innovation >>>	INSPECTION AND TEST PLAN	LPC ROTOR	
Written by: TIC	INTERMOUTAIN POWER	Outage Date: Oct. 2010	Rev: B
Preliminary Approved by: T. Suzuki/D. Haag / C. Klein. N.Kitaguchi / J.Radish/	LP TURBINE L-0 BLADE REPLACEMENT		Revision Date: 22 October 2010

Task No.	Process Description	Inspection Activity	Control Procedure / Support Documents	Inspection Requirements: Test Activity	H/W/R	Inspect by	Document / Signature	Records Complete Sign-off
2.	Install Pins	Ream the open hole (zero reaming and oversize reaming) with the hand-held pneumatic drill.	PRC SIL99016-a	H	R	Sup	*	
		Use machine oil or coolant for lubrication Lubrication to contain less than 1 PPM sulfur and be chlorine free.	PRC SIL99016-a	H	R	Sup	*	
		Clean the hole of any burrs or filings	PRC SIL99016-a	H	W	Sup	*	
		Insert the new blade pins in the middle position first. Use Lubrication oil GS RUB 105, Castor Oil or equivalent on final pins if too hard to insert.	PRC SIL99016-a	H	W	Sup	*	
		Remove bottom temporary pins and repeat first step of Task 2 with final pins.	PRC SIL99016-a	H	W	Sup	*	
		Remove top temporary pins and repeat first step of Task 2 with final pins.	PRC SIL99016-a	H	W	Sup	*	
		Complete pinning quality record. Measure pin diameter.	PRC SIL99016-a	Dim	R	Sup/TIC	PC-6064-c	

Inspection Requirements Legend:

	H – Hold Point	W – Witness Point	R – Review Documentation		* - Signature Required	
Test Activity	Vis – Visual Inspection	Dim – Dimensional Inspection	Doc – Review documents	NDT – Non Destructive Testing	Outage Start Date:	
Inspect^{n} by	TIC – TIC PM or Engineer	Sup – Labor Supervisor	NDT – NDT Contractor	C – Customer personnel	Other – Specify group	

Copyright © 2009 Toshiba International Corporation. All rights reserved.

IP7018111

TOSHIBA Leading Innovation >>>	INSPECTION AND TEST PLAN	LPC ROTOR	
Written by: TIC	INTERMOUTAIN POWER	Outage Date: Oct. 2010	Rev: B
Preliminary Approved by: T. Suzuki/D. Haag / C. Klein. N.Kitaguchi / J.Radish/	LP TURBINE L-0 BLADE REPLACEMENT		Revision Date: 22 October 2010

Task No.	Process Description	Inspection Activity	Control Procedure / Support Documents	Inspection Requirements: Test Activity	H/W/R	Inspect by	Document / Signature	Records Complete Sign-off
3.	Caulk Cover Segments	Caulking of the inlet side of the cover requires manual support applied at the outlet side of the blade cover by a jig and steel bar tool and hydraulic jack.	PRC-SIL99017-a	Vis	H	Sup	* 中村	SIL 11-4-10
		Check clearance between each cover segment and bucket tip.	PRC-SIL99017-a Assembling drawing (document number TBD)	Dim	R	Sup/TIC	* KF CRSNRA501-B 中村	SIL 11-4-10 CHK 11-4-2010
		Inspect clearance between sleeve and boss DONE AT BUCKET ASSEMBLY	PRC-SIL99017-a	Dim	R	Sup/TIC	* KF CRSNRA502-C 中村	SIL 11-4-10 CHK 11-4-2010
		Inspect maximum clearance between each pair of bucket dovetail and radial surface. DONE AT BUCKET ASSEMBLY	PRC-SIL99017-a	Dim	R	Sup/TIC	* ~~KF CRSNRA503-A~~ CHK 10-30-2010 中村	SIL 11-4-10 CHK 11-4-2010
		Inspect clearance between each dovetail. DONE AT BUCKET ASSEMBLY	PRC-SIL99017-a	Dim	R	Sup/TIC	* KF CRSNRA503-A 中村	SIL 11-4-10 CHK 11-4-2010
		Caulk pressure side tenon with zero clearance between cover and blade.	PRC-SIL99017-a	Vis	W	Sup/TIC	* 中村	CHK 11-4-2010 SIL 11-4-10
		Caulk suction side dimples with 0.4 mm clearance between cover and blade.	PRC-SIL99017-a	Vis	W	Sup/TIC	* 中村	CHK 11-4-2010 SIL 11-4-10

Inspection Requirements Legend:

	H – Hold Point	W – Witness Point	R – Review Documentation		* - Signature Required
Test Activity	Vis – Visual Inspection	Dim – Dimensional Inspection	Doc – Review documents	NDT – Non Destructive Testing	Outage Start Date:
Inspect[n] by	TIC – TIC PM or Engineer	Sup – Labor Supervisor	NDT – NDT Contractor	C – Customer personnel	Other – Specify group

Copyright © 2009 Toshiba International Corporation. All rights reserved.

IP7018112

TOSHIBA Leading Innovation >>>	INSPECTION AND TEST PLAN	LPC ROTOR	
Written by: TIC	INTERMOUTAIN POWER	Outage Date: Oct. 2010	Rev: B
Preliminary Approved by: T. Suzuki/D. Haag / C. Klein. N.Kitaguchi / J.Radish/	LP TURBINE L-0 BLADE REPLACEMENT		Revision Date: 22 October 2010

Task No.	Process Description	Inspection Activity	Control Procedure / Support Documents	Inspection Requirements: Test Activity	H/W/R	Inspect by	Document / Signature	Records Complete Sign-off
		Penetrant test caulked tenons and dimples. Confirm there is no scratch marks on caulked tenons. Any scratch marks shall be removed. Penetrant test caulked tenons and dimples by blading technician	PRC-SIL99017-a	NDT	W	Sup/TIC / [redacted]	*	CAK 11-4-2010 DH 11-9-10 JK 10-4-10
		Complete quality record and record clearance between covers and blade.		DIM	R	Sup/TIC / [redacted]	* KF CRSNRA501-B	CAK 11-4-2010 JK - 10-4-10 DJ.
4.	Measure L-0 blade diameter	Measure blade diameter with pie tape.		Dim	R	Sup/TIC / [redacted]	Dual Flow LSB Diameter Record	CAK 11-4-2010 JK -11-4-10
5.	STAKE PINS 2 PLACES EACH SIDE			VIS	W	SUP/TIC / CLIENT	11/19/10	JK 11-3-10 CAK 11-3-2010

Inspection Requirements Legend:

	H – Hold Point	W – Witness Point	R – Review Documentation		* - Signature Required
Test Activity	Vis – Visual Inspection	Dim – Dimensional Inspection	Doc – Review documents	NDT – Non Destructive Testing	Outage Start Date:
Inspect^{n} by	TIC – TIC PM or Engineer	Sup – Labor Supervisor	NDT – NDT Contractor	C – Customer personnel	Other – Specify group

Copyright © 2009 Toshiba International Corporation. All rights reserved.

IP7018113

TOSHIBA Leading Innovation >>>	INSPECTION AND TEST PLAN	LPC ROTOR	
Written by: TIC	INTERMOUTAIN POWER	Outage Date: Oct. 2010	Rev: B
Preliminary Approved by: T. Suzuki/D. Haag / C. Klein. N.Kitaguchi / J.Radish/	LP TURBINE L-0 BLADE REPLACEMENT		Revision Date: 22 October 2010

Task No.	Process Description	Inspection Activity	Control Procedure / Support Documents	Inspection Requirements:			Document / Signature	Records Complete Sign-off
Slow Speed Balance								
1	Slow Speed Balance	Set up low speed balance machine per ReGENco instructions.	DOC000466-05 DOC000467-05 DOC000468-05	Doc	R	Sup	*	JRadish
		Set Up rotor in slow speed balance machine	DOC000466-05	Dim	H	Sup	*	JRadish
		Inspect rotor runouts and journal condition. Report out of specification conditions and required corrective measures.	DOC000466-05	Vis	H	Sup	*	JRadish
		Set up vibration measurement and data acquisition instrumentation an Easy Balance 2.2 data acquisition unit.	DOC000466-05	Vis	W	Sup	*	JRadish
		Slow Roll rotor prior to balance runs.	DOC000466-05	Vis	H	Sup	*	JRadish
		Balance run limit at pedestal <0.9 grams-inch per pound of rotor.	DOC000466-05	Dim	H	Sup	*	JRadish exc. LPC

Inspection Requirements Legend:

	H – Hold Point	W – Witness Point	R – Review Documentation		* - Signature Required
Test Activity	Vis – Visual Inspection	Dim – Dimensional Inspection	Doc – Review documents	NDT – Non Destructive Testing	Outage Start Date:
Inspect^{n} by	TIC – TIC PM or Engineer	Sup – Labor Supervisor	NDT – NDT Contractor	C – Customer personnel	Other – Specify group

Copyright © 2009 Toshiba International Corporation. All rights reserved.

IP7018114

TOSHIBA Leading Innovation >>>	INSPECTION AND TEST PLAN	LPC ROTOR	
Written by: TIC	INTERMOUTAIN POWER	Outage Date: Oct. 2010	Rev: B
Preliminary Approved by: T. Suzuki/D. Haag / C. Klein. N.Kitaguchi / J.Radish/	LP TURBINE L-0 BLADE REPLACEMENT		Revision Date: 22 October 2010

Task No.	Process Description	Inspection Activity	Control Procedure / Support Documents	Inspection Requirements:			Document / Signature	Records Complete Sign-off
		Final Balance acceptance criteria in compliance with ISO1940/1 standards G 2.5 grades.	DOC000466-05	Vis	H	Sup/TIC/ [redacted]	* [signature] 11/9/10	J.RADISH EXC. LPC. CAK 11-17-2010
		Lock Balance weights	DOC000466-05	Vis	H	Sup	* [signature]	
		Independent verification of locked balance weights.	DOC000466-05	Vis	W	Sup/TIC/ [redacted]	* [signature]	11-19-2010

Inspection Requirements Legend:

	H – Hold Point	W – Witness Point	R – Review Documentation		* - Signature Required
Test Activity	Vis – Visual Inspection	Dim – Dimensional Inspection	Doc – Review documents	NDT – Non Destructive Testing	Outage Start Date:
Inspect^{n} by	TIC – TIC PM or Engineer	Sup – Labor Supervisor	NDT – NDT Contractor	C – Customer personnel	Other – Specify group

Copyright © 2009 Toshiba International Corporation. All rights reserved.

IP7018115

TOSHIBA Leading Innovation >>>	INSPECTION AND TEST PLAN	LPC ROTOR	
Written by: TIC	INTERMOUTAIN POWER	Outage Date: Oct. 2010	Rev: B
Preliminary Approved by: T. Suzuki/D. Haag / C. Klein. N.Kitaguchi / J.Radish/	LP TURBINE L-0 BLADE REPLACEMENT		Revision Date: 22 October 2010

Task No.	Process Description	Inspection Activity	Control Procedure / Support Documents	Inspection Requirements: Test Activity	H/W/R	Inspect by	Document / Signature	Records Complete Sign-off
Post-outage Walk down								
1.	Walk down TIC work area	All tooling and equipment demobilized		Vis	W	Sup/TIC /Client	*	CHK
		Tooling and equipment to be left on site stored per Client direction		Vis	W	Sup/TIC /Client	*	CHK
		Floors swept		Vis	W	Sup/TIC /Client	*	CHK
		Trash removed		Vis	W	Sup/TIC /Client	*	CHK
		Old blades left with Client		Vis	W	Sup/TIC /Client	*	CHK
		Empty blade boxes left with Client for IPSC1 outage		Vis	W	Sup/TIC /Client	*	CHK
		Office trailer locked and one set of keys turned over to IPSC Contract Administrator		Vis	W	Sup/TIC /Client	*	

Inspection Requirements Legend:

	H – Hold Point	W – Witness Point	R – Review Documentation		* - Signature Required
Test Activity	Vis – Visual Inspection	Dim – Dimensional Inspection	Doc – Review documents	NDT – Non Destructive Testing	Outage Start Date:
Inspect^{n} by	TIC – TIC PM or Engineer	Sup – Labor Supervisor	NDT – NDT Contractor	C – Customer personnel	Other – Specify group

Copyright © 2009 Toshiba International Corporation. All rights reserved.

IP7018116

MEMORANDUM

INTERMOUNTAIN POWER SERVICE CORPORATION

TO: George W. Cross

FROM: Jon P. Christensen

DATE: October 8, 2009

SUBJECT: Recommendation to Award LP Turbine LSB Replacement Contract to Toshiba Corp.

We are recommending the award of the contract for LP Turbine Last Stage Buckets (LSB) to Toshiba Corp. Our recommendation is based upon the following points:

- Toshiba is the low bidder. Their bid of $10 million is $1.5 million lower than the next bidder, MD&A, and $2 million below the budgeted amount for this project. Please refer to the attached evaluation sheet to see the comparisons between the bidders.

- The Toshiba replacement LSB's are very similar to the buckets currently installed on our machines. Toshiba started in the turbine industry as a GE licensee, but has since branched out and improved on the original GE design. Both GE and Toshiba proposed LSB's manufactured in Japan at the same Toshiba - GE joint owned facility. They have more original installations and retrofits of these size class buckets than any other non-OEM provider.

- Rotor torsional-lateral resonant vibration concerns with non-OEM LSB's are minimized by installing the Toshiba design. As mentioned above, the Toshiba LSB design is very close to the installed LSB's and should not change any of the sub-synchronous resonant vibration frequencies. Toshiba has also agreed to provide a torsional-lateral vibration study to show the effect of their LSB's on the sub-synchronous resonant vibration nodes.

We met with Toshiba on October 2, 2009 and they demonstrated, to our satisfaction, that they have the resources to install the LSB's per the schedule specified in the contract. Toshiba recently acquired ReGenco to do all of their domestic repairs and retrofits. ReGenco personnel have been trained and have successfully completed several bucket replacements on LP turbines of this size class.

Toshiba/ReGenco provided a very aggressive installation schedule that is two days shorter than the contract requirements. Their liquidated damages and bonus proposals are reasonable, considering the installation schedule they are proposing.

There are some commercial issues with the Toshiba proposal that we will need to negotiate and which could take some time to complete.

If you agree with our recommendation, please sign the attached Bid Transmittal and forward it to Ralph Newberry in Purchasing.

DS/JKH:jmj

Attachments

INTERMOUNTAIN POWER SERVICE CORPORATION

November 2, 2009

Mr. Chris Bernard, Director, STG Retrofits
Toshiba International Corporation - Power Systems Division
6 Dickinson Drive, Bldg 300, STE 2
Chadds Ford, PA 19317

Letter of Intent to Award Contract 10-45808
LP Turbine Last Stage Bucket Replacement

Dear Mr. Bernard:

IPSC has approval to award the above referenced Contract to Toshiba International Corporation. Please note that the Contract number will be 10-45808. The Contract Documents have been changed to reflect the correct contract number.

This Contract shall be awarded upon final agreement between the two parties regarding all of the Commercial, Technical and Payment terms which shall become part of the final Contract Documents.

In an effort to prevent any further delays on this project, IPSC is sending this "Letter of Intent" as a precursor to the formal Contract. IPSC anticipates that Toshiba International Corporation will begin preparation for this project immediately.

The formal Contract shall be forwarded for signature within seven (7) to ten (10) working days. If you have any questions regarding this matter, please contact Dave Spence at (435)864-6449 or Ralph Newberry at (435)864-6544.

Sincerely,

Jon A Jenkins for GWC

George W. Cross
President and Chief Operations Officer

RCN:sc

cc: George W. Cross
Jon Christensen
Jerry Hintze
Dave Spence
Contract File

850 West Brush Wellman Road, Delta, Utah 84624 / Telephone: (435) 864-4414 / FAX: (435) 864-0570 / Fed. I.D. #87-0393573

INTERMOUNTAIN POWER SERVICE CORPORATION

December 8, 2009

Mr. Chris Bernard, Director, STG Retrofits
Toshiba International Corporation - Power Systems Division
6 Dickinson Drive, Bldg 300, STE 2
Chadds Ford, PA 19317

Re: Revised Letter of Intent to Award Contract 10-45808
LP Turbine Last Stage Bucket Replacement

Dear Mr. Bernard:

Intermountain Power Service Corporation (IPSC) hereby agrees to purchase and directs Toshiba International Corporation (TIC) to commence work on the two unit package of LP Turbine Last Stage Buckets as identified in TIC's proposal No. SPS-GMI-GNRL-0117, dated September 14, 2009, subject to the terms described in this Letter of Commitment Agreement (LOC Agreement).

The terms and conditions of this LOC agreement in order of precedence are:

1. Those described hereunder.
2. TIC's proposal No. SPS-GMI-GNRL-0117, dated September 14, 2009.
3. The Terms and Conditions contained in Section 1 of the Proposal as may be modified by mutual agreement between IPSC and TIC.

All terms combined constitute the LOC Agreement and this LOC Agreement shall remain in full force and effect until such time the parties' have executed a formal Contract, which shall supersede this LOC Agreement. Target date for completion of such document is January 15, 2010. If a formal Contract is not executed on or before February 15, 2010, IPSC will pay TIC Termination Charges according to the Cancellation Schedule contained on Page 4 of the Commercial Section of the Proposal unless this LOC Agreement is extended by mutual agreement.

IPSC agrees to make payments per the Payment Schedule, Section 2.4 on Page 3 of the Commercial Section of the Proposal.

The date of the parties' agreement for purposes of the Payment and Termination Schedules shall be December 1, 2009.

Acknowledge your acceptance of this LOC Agreement by signing below and returning the signed document.

FOR GWC
George W. Cross
President and Chief Operations Officer

DEC 8, 2009
Date

TIC Authorized Representative
HIROSHI KASAGI
JKH:jmj
SENIOR VP & GM

12/11/2009
Date

850 West Brush Wellman Road, Delta, Utah 84624 / Telephone: (435) 864-4414 / FAX: (435) 864-6670 / Fed. I.D. #87-0388573

TOSHIBA

TOSHIBA INTERNATIONAL CORPORATION

Power Systems Division
101 Montgomery St., 23rd Floor
San Francisco, CA 94104

INVOICE	SFI-4301
DATE	August 20, 2010

BILL TO	**Intermountain Power Service Corporation** Accounts Payable 850 West Brush, Wellman Road Delta, Utah 84624-9546
Attn:	Dave
Phone:	435-864-4414

SHIP TO	Intermountain Power Service Corporation Generating Station 850 West Brush, Wellman Road Delta, Utah 84624-9546

Payment Terms	Customer PO	Project	Delivery Terms
Net 30 days by T/T Remittance	Contract No.10-45808	Intermountain Units 1&2 LSB Replacement	DDP Jobsite per Inco terms 2000 for LSB's
Please pay by	**TIC PO**	**Reference Note**	
September 19, 2010	SFP-2410, SFP-2411	Shipment date: Aug/15/2010 Yokohama Japan	

ITEM	DESCRIPTION	Taxable (Y/N)	Qty	Unit Price	Total
	Intermountain Units 1&2 LSB Replacement				
	To provide the two unit package of LP Turbine Last				
	Stage Buckets as identified in TIC's proposal No.				
	SPS-GMI-GNRL-0117				
	Unit 2: Final Contract Price: US$5,012,500.00*				
	*including $17,000 of the agreed acceleration charge				
1	65% Upon replacement parts shipment from Yokohama, Japan	Y			$3,258,125.00
	65% x $5,012,500.00 = $3,258,125.00				
				Tax Rate	5.95%
				Tax Amount	$193,858.44
				SUBTOTAL:	$3,451,983.44
2	Adjustment due to the increase in the final Contract amount	N			$2,550.00
	LOC payment of 15% based on $4,995,500.00: $749,325.00				
	LOC payment of 15% based on $5,012,500.00: $751,875.00				
	The amount has not been invoiced (Difference) : $2,550.00				
Attachments: Bill of Lading, Packing List					
Note:	TAX: Sales Tax 5.95%				
				TOTAL:	US$3,454,533.44

Please pay by wire transfer	BANK OF AMERICA 1855 Grant Street Concord, CA 94520, USA ABA#0260-0959-3 Beneficiary: Toshiba International Corp Acct. # 1233-4-07050

Prepared By:	Mariko Young
Tel:	415-403-5637
Authorized:	
	Ester Wasidlow – VP Finance & General Affairs

THE EXPORTATION FROM THE UNITED STATES OF THE PRODUCTS, commodities or technical data sold, furnished or delivered to your firm by Toshiba International Corporation and the re-exportation of such items from any other country may be prohibited or restricted under U.S. Federal Laws and Regulations. Accordingly, no exportation of such products, commodities or technical data from the United States and no re-exportation thereof from any other country shall be permitted, except in accordance with U.S. law.

Please remit your payment by wire transfer to the above bank account. For check remittance, please mail your check to Toshiba International Corporation 101 Montgomery ST 23rd FL, San Francisco, CA 94104.

IP7018120

(Forwarding Agent)

Shipper
TOSHIBA CORPORATION
1-1, SHIBAURA 1-CHOME, MINATO-KU,
TOKYO 105-8001, JAPAN

(15A52IL)

Consignee
TOSHIBA INTERNATIONAL CORPORATION
101 MONTGOMERY STREET 23RD FLOOR
SAN FRANCISCO, CALIFORNIA 94104
ATTEN: MS. LAWY SHEPHARD / MS. MARIKO YOUNG
TEL : 415-403-5637 FAX : 415-403-5622

Notify Party
1)SAME AS CONSIGNEE
2)TOSHIBA LOGISTICS AMERICA INC.
9740 IRVINE BLVD, IRVINE, CA 92618
ATTENTION : MR. TAKESHI GOMI / MR. ALEX HIDALGO
TEL : 949-461-4408 FAX : 949-859-1298 ***

Pre-carriage by

Place of Receipt
YOKOHAMA OY

Vessel: APL ATLANTA
Voy. No.: 029E
Port of Loading: YOKOHAMA, JAPAN

Port of Discharge: OAKLAND, CA, U.S.A.
Place of Delivery: SALT LAKE CITY, UT, U.S.A. OY
Final Destination (Merchant's reference only)

Member of the Japan International Freight Forwarders Association, Inc.

Waybill No.
UTOCJPN1008016

WAYBILL
NON-NEGOTIABLE

UTOC
Utoc Corporation

Received by the Carrier from the Shipper in apparent good order and condition unless otherwise indicated herein, the Goods, or the container(s) or package(s) said to contain the cargo herein mentioned, to be carried subject to the terms and conditions on the back hereof by the vessel named herein or any substitute at the Carrier's option and/or other means of carriage, from the place of receipt or the port of loading and to the port of discharge or the place of delivery shown herein and there to be delivered unto the Consignee named herein, or his authorized agent, on production of such proof of identity as required by the Carrier.
In witness whereof, the undersigned, has signed the Waybill(s) all of this tenor and date.

Party to contact for cargo release
UTOC AMERICA, INC
2398 EAST PACIFICA PLACE, SUITE 200,
RANCHO DOMINGUEZ, CA 90220, U.S.A.
TEL. 1-310-605-0616 FAX 1-310-605-0632

Container No. / Seal No. / Marks and Numbers	No. of Containers or Pkgs	Kind of Packages; Description of Goods	Gross Weight (KGS)	Measurement (M3)
- AS PER ATTACHED SHEET -		"SHIPPER'S LOAD & COUNT" "SAID TO CONTAIN"		
		INTERMOUTAIN GENERATING STATION UNIT 2		
		L-0 BLADE		
		NAME OF PROJECT: INTERMOUNTAIN#2 CONTRACT NO.:10-45808		
		*** 3)TOSHIBA INTERNATIONAL CORPORATION 13131 WEST LITTLE NEW YORK ROAD, HOUSTON, TX 77041 ATTN: MR. JORGE LARRANAGA TEL : 713-466-0277 EXT. 3415 FAX : 713-896-5258 HS CODE: 8406.90, 7307.29		
	1 CONTAINER (12 CASES)		11,070.00	26.138
		FREIGHT COLLECT		

Total number of Containers or other Packages or Units (in words): ONE (1) CONTAINER ONLY

ORIGINAL

Merchant's Declared Value

Please refer to Clauses 18 & 23 of the Carrier's applicable Multimodal Transport Bill of Lading.

Freight and Charges	Revenue Tons	Rate	Per	Prepaid	Collect
					AS ARRANGED

Exchange Rate

Prepaid at

Payable at: DESTINATION

Place and Date of Issue: TOKYO, JAPAN AUG. 15. 2010

Total Prepaid in Local Currency

No. of Original Waybill(s): ONE (1)

As Carrier: UTOC CORPORATION

Laden on Board the Vessel
Date: AUG. 15. 2010
By: Digaji Janaka

Vessel: APL ATLANTA
Port of Loading: YOKOHAMA, JAPAN

(TERMS CONTINUED ON BACK HEREOF)
©JIFFA MODEL FORM (WW-1)

Particulars furnished by Merchant. All descriptions contained herein considered unknown to the Carrier.

IP7018121

TOSHIBA TOSHIBA CORPORATION PRINCIPAL OFFICE

1-1,SHIBAURA 1-CHOME, MINATO-KU, TOKYO 105-8001, JAPAN
FACSIMILE (03)5444-9197. TELEX J22587
PHONE. TOKYO(03)3457-3678

PACKING LIST

INVOICE NO.15A52IL

TOKYO JUL. 14, 2010

(M246152)

SHIPPING MARKS & Nos

Accountee:
TOSHIBA INTERNATIONAL CORPORATION
101 MONTGOMERY STREET, 23RD FLOOR
SAN FRANCISCO, CA 94104 USA
PHONE : 415-403-5637 FAX : 415-403-5622

Shipped to:

AS PER ATTACHED SHEET

Shipped by: V. 029E APL ATLANTA	From: YOKOHAMA, JAPAN
To: SALT LAKE CITY, UT, U.S.A.	
Sailing on or about: AUG. 15, 2010	Payment terms: T/T REMITTANCE

No. of package	Description of goods	Quantity	N/W (KGS)	G/W (KGS)	M'MENT (M3)
	INTERMOUNTAIN GENERATING STATION UNIT 2				
	L-0 BLADE	1 LOT	7,990.0	11,070.0	26.138
	-DETAILS ARE AS PER ATTACHED SHEET(S)-				
TOTAL : TWELVE (12) CASES ONLY COUNTRY OF ORIGIN : JAPAN			7,990.0	11,070.0	26.138

TOSHIBA CORPORATION

AUTHORIZED SIGNATORY

IP7018122

=SHIPPING MARK=

CONTRACTOR : TOSHIBA INTERNATIONAL CORPORATION
NAME OF PROJECT : INTERMOUNTAIN UNIT 2
CONTRACT NO. : SFP-2410 R1
DESCRIPTION OF GOODS : LAST STAGE BLADE
SUPPLIER : TOSHIBA CORPORATION
COUNTRY OF ORIGIN : JAPAN
DESTINATION : US PORT
CASE NO. : INT2-TSB-T-001 / 010, 013, 014
NET WEIGHT : KGS (LBS)
GROSS WEIGHT : KGS (LBS)
DIMENSION: X X CM
(X X FT)
VOLUME : M3 (FT3)
MADE IN JAPAN
TOSHIBA CORPORATION

Packing Summary List

Case No.	Description	Package		Dimensions (cm)			M'ment	N/W	G/W	FT
		Q'ty	Style	L	W	H	m3	kgs	kgs	
INT2-TSB-T-001	L-0 AT BKT BLD	1	CASE	170	112	126	2.399	720.0	1,000.0	2.399
INT2-TSB-T-002	L-0 AT BKT BLD	1	CASE	170	112	126	2.399	720.0	1,000.0	2.399
INT2-TSB-T-003	L-0 BT BKT BLD	1	CASE	170	112	126	2.399	720.0	1,000.0	2.399
INT2-TSB-T-004	L-0 BT BKT BLD	1	CASE	170	112	126	2.399	720.0	1,000.0	2.399
INT2-TSB-T-005	L-0 CT BKT BLD	1	CASE	170	112	126	2.399	720.0	1,000.0	2.399
INT2-TSB-T-006	L-0 CT BKT BLD	1	CASE	170	112	126	2.399	720.0	1,000.0	2.399
INT2-TSB-T-007	L-0 AG BKT BLD	1	CASE	170	112	126	2.399	720.0	1,000.0	2.399
INT2-TSB-T-008	L-0 AG BKT BLD	1	CASE	170	112	126	2.399	720.0	1,000.0	2.399
INT2-TSB-T-009	L-0 BG BKT BLD	1	CASE	170	112	126	2.399	720.0	1,000.0	2.399
INT2-TSB-T-010	L-0 BG BKT BLD	1	CASE	170	112	126	2.399	720.0	1,000.0	2.399
INT2-TSB-T-013	L-0 BKT BLD T-SIDE(SAMPLE)	1	CASE	105	70	39	0.287	50.0	90.0	0.287
INT2-TSB-T-014	BKT BLD PARTS	1	CASE	182	142	72	1.861	740.0	980.0	1.861
		12	CASES				26.138	7,990.0	11,070.0	26.138

TOSHIBA

TOSHIBA CORPORATION
TOSHIBA BUILDING,1-1,SHIBAURA 1-CHOME,
MINATO-KU,TOKYO 105,JAPAN

PHONE:TOKYO(03)3457-2416
CABLE:TOSHIBA TOKYO
TELEX:J22587 (TOSHIBA)
FACSIMILE:TOKYO(03)3457-4792

Customer : USA INTERMOUNTAIN POWER SERVICE (XUIN2)

PACKING LIST

Works: KEIHIN PRODUCT OPERATIONS			Manufacturing No. M246152		Date: JUL. 1, 2010
Case No.	INT2-TSB-T-001		Packing Style:	CASE	Invoice No.
Net Weight:	720	KGS	Dimension:	170 X 112 X 126 CM	
Gross Weight:	1,000	KGS	Dimension:	5.6 X 3.7 X 4.1 FT	
Net Weight:	1,587	LBS	M'ment:	2.399 M3	
Gross Weight:	2,205	LBS	M'ment:	84.719 FT3	

Item No.	Description	Quantity	Remarks
CAV0101	L-0 BLADE		
	SZ-0001 L-0 AT BKT BLD	44 PCE	
	- CONCLUDED -		

IP7018125

TOSHIBA

TOSHIBA CORPORATION
TOSHIBA BUILDING,1-1,SHIBAURA 1-CHOME.
MINATO-KU,TOKYO 105,JAPAN

PHONE:TOKYO(03)3457-2416
CABLE:TOSHIBA TOKYO
TELEX:J22587 (TOSHIBA)
FACSIMILE:TOKYO(03)3457-4792

Customer : USA INTERMOUNTAIN POWER SERVICE (XUIN2)

PACKING LIST

Works:	KEIHIN PRODUCT OPERATIONS		Manufacturing No.	M246152					Date:	JUL. 1, 2010	
Case No.	INT2-TSB-T-002		Packing Style:	CASE					Invoice No.		
Net Weight:	720	KGS	Dimension:	170	X	112	X	126	CM		
Gross Weight:	1,000	KGS	Dimension:	5.6	X	3.7	X	4.1	FT		
Net Weight:	1,587	LBS	M'ment:	2.399	M3						
Gross Weight:	2,205	LBS	M'ment:	84.719	FT3						

Item No.	Description	Quantity	Remarks
CAV0101	L-0 BLADE		
	SZ-0001 L-0 AT BKT BLD	44 PCE	
	- CONCLUDED -		

IP7018126

TOSHIBA

TOSHIBA CORPORATION
TOSHIBA BUILDING,1-1,SHIBAURA 1-CHOME,
MINATO-KU,TOKYO 105,JAPAN

PHONE:TOKYO(03)3457-2416
CABLE:TOSHIBA TOKYO
TELEX:J22587 (TOSHIBA)
FACSIMILE:TOKYO(03)3457-4792

Customer : USA INTERMOUNTAIN POWER SERVICE (XUIN2)

PACKING LIST

Works: KEIHIN PRODUCT OPERATIONS			Manufacturing No. M246152		Date: JUL. 1, 2010
Case No.	INT2-TSB-T-003		Packing Style:	CASE	Invoice No.
Net Weight:	720	KGS	Dimension:	170 X 112 X 126	CM
Gross Weight:	1,000	KGS	Dimension:	5.6 X 3.7 X 4.1	FT
Net Weight:	1,587	LBS	M'ment:	2.399	M3
Gross Weight:	2,205	LBS	M'ment:	84.719	FT3

Item No.	Description	Quantity	Remarks
CAV0101	L-0 BLADE		
	SZ-0003 L-0 BT BKT BLD	44 PCE	
	- CONCLUDED -		

IP7018127

TOSHIBA

TOSHIBA CORPORATION
TOSHIBA BUILDING,1-1,SHIBAURA 1-CHOME,
MINATO-KU,TOKYO 105,JAPAN

PHONE:TOKYO(03)3457-2416
CABLE:TOSHIBA TOKYO
TELEX:J22587 (TOSHIBA)
FACSIMILE:TOKYO(03)3457-4792

Customer : USA INTERMOUNTAIN POWER SERVICE (XUIN2)

PACKING LIST

Works: KEIHIN PRODUCT OPERATIONS			Manufacturing No. M246152						Date: JUL. 1, 2010		
Case No. INT2-TSB-T-004			Packing Style: CASE						Invoice No.		
Net Weight:	720	KGS	Dimension:	170	X	112	X	126	CM		
Gross Weight:	1,000	KGS	Dimension:	5.6	X	3.7	X	4.1	FT		
Net Weight:	1,587	LBS	M'ment:	2.399	M3						
Gross Weight:	2,205	LBS	M'ment:	84.719	FT3						

Item No.	Description	Quantity	Remarks
CAV0101	L-0 BLADE		
	SZ-0003 L-0 BT BKT BLD	44 PCE	
	- CONCLUDED -		

IP7018128

TOSHIBA
TOSHIBA CORPORATION
TOSHIBA BUILDING,1-1,SHIBAURA 1-CHOME,
MINATO-KU,TOKYO 105,JAPAN

PHONE:TOKYO(03)3457-2416
CABLE:TOSHIBA TOKYO
TELEX:J22587 (TOSHIBA)
FACSIMILE:TOKYO(03)3457-4792

Customer : USA INTERMOUNTAIN POWER SERVICE (XUIN2)

PACKING LIST

Works:	KEIHIN PRODUCT OPERATIONS		Manufacturing No.	M246152	Date: JUL. 1, 2010
Case No.	INT2-TSB-T-005		Packing Style:	CASE	Invoice No.
Net Weight:	720	KGS	Dimension:	170 X 112 X 126 CM	
Gross Weight:	1,000	KGS	Dimension:	5.6 X 3.7 X 4.1 FT	
Net Weight:	1,587	LBS	M'ment:	2.399 M3	
Gross Weight:	2,205	LBS	M'ment:	84.719 FT3	

Item No.	Description	Quantity	Remarks
CAV0101	L-0 BLADE		
	SZ-0005 L-0 CT BKT BLD	44 PCE	
	- CONCLUDED -		

IP7018129

TOSHIBA

TOSHIBA CORPORATION
TOSHIBA BUILDING,1-1,SHIBAURA 1-CHOME,
MINATO-KU,TOKYO 105,JAPAN

PHONE:TOKYO(03)3457-2416
CABLE:TOSHIBA TOKYO
TELEX:J22587 (TOSHIBA)
FACSIMILE:TOKYO(03)3457-4792

Customer : USA INTERMOUNTAIN POWER SERVICE (XUIN2)

PACKING LIST

Works:	KEIHIN PRODUCT OPERATIONS		Manufacturing No.	M246152					Date:	JUL. 1, 2010	
Case No.	INT2-TSB-T-006		Packing Style:	CASE					Invoice No.		
Net Weight:	720	KGS	Dimension:	170	X	112	X	126	CM		
Gross Weight:	1,000	KGS	Dimension:	5.6	X	3.7	X	4.1	FT		
Net Weight:	1,587	LBS	M'ment:	2.399	M3						
Gross Weight:	2,205	LBS	M'ment:	84.719	FT3						

Item No.	Description	Quantity	Remarks
CAV0101	L-0 BLADE		
	SZ-0005 L-0 CT BKT BLD	44 PCE	
	- CONCLUDED -		

IP7018130

TOSHIBA

TOSHIBA CORPORATION
TOSHIBA BUILDING,1-1,SHIBAURA 1-CHOME,
MINATO-KU,TOKYO 105,JAPAN

PHONE:TOKYO(03)3457-2416
CABLE:TOSHIBA TOKYO
TELEX:J22587 (TOSHIBA)
FACSIMILE:TOKYO(03)3457-4792

Customer : USA INTERMOUNTAIN POWER SERVICE (XUIN2)

PACKING LIST

Works:	KEIHIN PRODUCT OPERATIONS		Manufacturing No.	M246152					Date:	JUL. 7, 2010	
Case No.	INT2-TSB-T-007		Packing Style:	CASE					Invoice No.		
Net Weight:	720	KGS	Dimension:	170	X	112	X	126	CM		
Gross Weight:	1,000	KGS	Dimension:	5.6	X	3.7	X	4.1	FT		
Net Weight:	1,587	LBS	M'ment:	2.399	M3						
Gross Weight:	2,205	LBS	M'ment:	84.719	FT3						

Item No.	Description	Quantity	Remarks
CAV0101	L-0 BLADE		
	SZ-0002 L-0 AG BKT BLD	44 PCE	
	- CONCLUDED -		

IP7018131

TOSHIBA

TOSHIBA CORPORATION
TOSHIBA BUILDING,1-1,SHIBAURA 1-CHOME,
MINATO-KU,TOKYO 105,JAPAN

PHONE:TOKYO(03)3457-2416
CABLE:TOSHIBA TOKYO
TELEX:J22587 (TOSHIBA)
FACSIMILE:TOKYO(03)3457-4792

Customer : USA INTERMOUNTAIN POWER SERVICE (XUIN2)

PACKING LIST

Works: KEIHIN PRODUCT OPERATIONS			Manufacturing No. M246152		Date: JUL. 7, 2010
Case No. INT2-TSB-T-008			Packing Style: CASE		Invoice No.
Net Weight:	720	KGS	Dimension:	170 X 112 X 126 CM	
Gross Weight:	1,000	KGS	Dimension:	5.6 X 3.7 X 4.1 FT	
Net Weight:	1,587	LBS	M'ment:	2.399 M3	
Gross Weight:	2,205	LBS	M'ment:	84.719 FT3	

Item No.	Description	Quantity	Remarks
CAV0101	L-0 BLADE		
	SZ-0002 L-0 AG BKT BLD	44 PCE	
	- CONCLUDED -		

IP7018132

TOSHIBA

TOSHIBA CORPORATION
TOSHIBA BUILDING,1-1,SHIBAURA 1-CHOME,
MINATO-KU,TOKYO 105,JAPAN

PHONE:TOKYO(03)3457-2416
CABLE:TOSHIBA TOKYO
TELEX:J22587 (TOSHIBA)
FACSIMILE:TOKYO(03)3457-4792

Customer : USA INTERMOUNTAIN POWER SERVICE (XUIN2)

PACKING LIST

Works: KEIHIN PRODUCT OPERATIONS			Manufacturing No. M246152		Date: JUL. 14, 2010
Case No.	INT2-TSB-T-009		Packing Style:	CASE	Invoice No.
Net Weight:	720	KGS	Dimension:	170 X 112 X 126 CM	
Gross Weight:	1,000	KGS	Dimension:	5.6 X 3.7 X 4.1 FT	
Net Weight:	1,587	LBS	M'ment:	2.399 M3	
Gross Weight:	2,205	LBS	M'ment:	84.719 FT3	

Item No.	Description	Quantity	Remarks
CAV0101	L-0 BLADE		
	SZ-0004 L-0 BG BKT BLD	44 PCE	
	- CONCLUDED -		

IP7018133

TOSHIBA

TOSHIBA CORPORATION
TOSHIBA BUILDING,1-1,SHIBAURA 1-CHOME,
MINATO-KU,TOKYO 105,JAPAN

PHONE:TOKYO(03)3457-2416
CABLE:TOSHIBA TOKYO
TELEX:J22587 (TOSHIBA)
FACSIMILE:TOKYO(03)3457-4792

Customer : USA INTERMOUNTAIN POWER SERVICE (XUIN2)

PACKING LIST

Works: KEIHIN PRODUCT OPERATIONS			Manufacturing No. M246152		Date: JUL. 14, 2010
Case No.	INT2-TSB-T-010		Packing Style:	CASE	Invoice No.
Net Weight:	720	KGS	Dimension:	170 X 112 X 126 CM	
Gross Weight:	1,000	KGS	Dimension:	5.6 X 3.7 X 4.1 FT	
Net Weight:	1,587	LBS	M'ment:	2.399 M3	
Gross Weight:	2,205	LBS	M'ment:	84.719 FT3	

Item No.	Description	Quantity	Remarks
CAV0101	L-0 BLADE		
	SZ-0004 L-0 BG BKT BLD	44 PCE	
	- CONCLUDED -		

IP7018134

TOSHIBA

TOSHIBA CORPORATION
TOSHIBA BUILDING,1-1,SHIBAURA 1-CHOME,
MINATO-KU,TOKYO 105,JAPAN

PHONE:TOKYO(03)3457-2416
CABLE:TOSHIBA TOKYO
TELEX:J22587 (TOSHIBA)
FACSIMILE:TOKYO(03)3457-4792

Customer : USA INTERMOUNTAIN POWER SERVICE (XUIN2)

PACKING LIST

Works: KEIHIN PRODUCT OPERATIONS			Manufacturing No. M246152		Date: JUL. 20, 2010
Case No.	INT2-TSB-T-013		Packing Style:	CASE	Invoice No.
Net Weight:	50	KGS	Dimension:	105 X 70 X 39 CM	
Gross Weight:	90	KGS	Dimension:	3.4 X 2.3 X 1.3 FT	
Net Weight:	110	LBS	M'ment:	0.287 M3	
Gross Weight:	198	LBS	M'ment:	10.135 FT3	

Item No.	Description	Quantity	Remarks
CAV0101	L-0 BLADE		
	SZ-0007 L-0 BKT BLD (YOBI) T	3 PCE	
	- CONCLUDED -		

IP7018135

TOSHIBA
TOSHIBA CORPORATION
TOSHIBA BUILDING,1-1,SHIBAURA 1-CHOME,
MINATO-KU,TOKYO 105,JAPAN

PHONE:TOKYO(03)3457-2416
CABLE:TOSHIBA TOKYO
TELEX:J22587 (TOSHIBA)
FACSIMILE:TOKYO(03)3457-4792

Customer : USA, INTERMOUNTAIN GENERATING S (XUIN2)

PACKING LIST

Works: KEIHIN PRODUCT OPERATIONS		Manufacturing No. M246152		Date: JUL. 23, 2010	
Case No. INT2-TSB-T-014		Packing Style: CASE		Invoice No.	
Net Weight:	740 KGS	Dimension:	182 X 142 X 72 CM		
Gross Weight:	980 KGS	Dimension:	6 X 4.7 X 2.4 FT		
Net Weight:	1,631 LBS	M'ment:	1.861 M3		
Gross Weight:	2,161 LBS	M'ment:	65.720 FT3		

Item No.	Description		Quantity	Remarks
CAV0101		BKT PARTS		
	SZ-0019	L-0AT COVER SGMENT	88 PCS	
	SZ-0020	L-0AT COVER SGMENT (L)	3 PCS	
	SZ-0021	L-0AG COVER SGMENT	88 PCS	
	SZ-0022	L-0AG COVER SGMENT (L)	3 PCS	
	SZ-0023	L-0BT COVER SGMENT	88 PCS	
	SZ-0024	L-0BT COVER SGMENT (L)	3 PCS	
	SZ-0025	L-0BG COVER SGMENT	88 PCS	
	SZ-0026	L-0BG COVER SGMENT (L)	3 PCS	
	SZ-0027	L-0CT COVER SGMENT	88 PCS	
	SZ-0028	L-0CT COVER SGMENT (L)	3 PCS	
	SZ-0029	L-0CG COVER SGMENT	88 PCS	
	SZ-0030	L-0CG COVER SGMENT (L)	3 PCS	
	SZ-0031	L-0AT BKT PIN (L) +0.2MM	88 PCS	
	SZ-0032	L-0AT BKT PIN (M) +0.2MM	88 PCS	
	SZ-0033	L-0AT BKT PIN (S) +0.2MM	88 PCS	
	SZ-0034	L-0AT BKT PIN (L) +0.4MM	20 PCS	
	SZ-0035	L-0AT BKT PIN (M) +0.4MM	20 PCS	

- TO BE CONTINUED -

TOSHIBA
TOSHIBA CORPORATION
TOSHIBA BUILDING,1-1,SHIBAURA 1-CHOME,
MINATO-KU,TOKYO 105,JAPAN

PHONE:TOKYO(03)3457-2416
CABLE:TOSHIBA TOKYO
TELEX:J22587 (TOSHIBA)
FACSIMILE:TOKYO(03)3457-4792

Customer : USA, INTERMOUNTAIN GENERATING S (XUIN2)

PACKING LIST

Works: KEIHIN PRODUCT OPERATIONS	Manufacturing No. M246152	Date: JUL. 23, 2010
Case No. INT2-TSB-T-014	Packing Style:	Invoice No.
Net Weight:	Dimension:	
Gross Weight:	Dimension:	
Net Weight:	M'ment:	
Gross Weight:	M'ment:	

Item No.	Description		Quantity	Remarks
	SZ-0036	L-0AT BKT PIN (S) +0.4MM	20 PCS	
	SZ-0037	L-0AT BKT PIN (L) +0.6MM	10 PCS	
	SZ-0038	L-0AT BKT PIN (M) +0.6MM	10 PCS	
	SZ-0039	L-0AT BKT PIN (S) +0.6MM	10 PCS	
	SZ-0040	L-0AT SLEEVE	88 PCS	
	SZ-0041	L-0AG BKT PIN (L) +0.2MM	88 PCS	
	SZ-0042	L-0AG BKT PIN (M) +0.2MM	88 PCS	
	SZ-0043	L-0AG BKT PIN (S) +0.2MM	88 PCS	
	SZ-0044	L-0AG BKT PIN (L) +0.4MM	20 PCS	
	SZ-0045	L-0AG BKT PIN (M) +0.4MM	20 PCS	
	SZ-0046	L-0AG BKT PIN (S) +0.4MM	20 PCS	
	SZ-0047	L-0AG BKT PIN (L) +0.6MM	10 PCS	
	SZ-0048	L-0AG BKT PIN (M) +0.6MM	10 PCS	
	SZ-0049	L-0AG BKT PIN (S) +0.6MM	10 PCS	
	SZ-0050	L-0AG SLEEVE	88 PCS	
	SZ-0051	L-0BT BKT PIN (L) +0.2MM	88 PCS	
	SZ-0052	L-0BT BKT PIN (M) +0.2MM	88 PCS	
	SZ-0053	L-0BT BKT PIN (S) +0.2MM	88 PCS	

- TO BE CONTINUED -

TOSHIBA
TOSHIBA CORPORATION
TOSHIBA BUILDING,1-1,SHIBAURA 1-CHOME,
MINATO-KU,TOKYO 105,JAPAN

PHONE:TOKYO(03)3457-2416
CABLE:TOSHIBA TOKYO
TELEX:J22587 (TOSHIBA)
FACSIMILE:TOKYO(03)3457-4792

Customer : USA, INTERMOUNTAIN GENERATING S (XUIN2)

PACKING LIST

Works: KEIHIN PRODUCT OPERATIONS	Manufacturing No. M246152	Date: JUL. 23, 2010
Case No. INT2-TSB-T-014	Packing Style:	Invoice No.
Net Weight:	Dimension:	
Gross Weight:	Dimension:	
Net Weight:	M'ment:	
Gross Weight:	M'ment:	

Item No.	Description	Quantity	Remarks
	SZ-0054 L-OBT BKT PIN (L) +0.4MM	20 PCS	
	SZ-0055 L-OBT BKT PIN (M) +0.4MM	20 PCS	
	SZ-0056 L-OBT BKT PIN (S) +0.4MM	20 PCS	
	SZ-0057 L-OBT BKT PIN (L) +0.6MM	10 PCS	
	SZ-0058 L-OBT BKT PIN (M) +0.6MM	10 PCS	
	SZ-0059 L-OBT BKT PIN (S) +0.6MM	10 PCS	
	SZ-0060 L-OBT SLEEVE	88 PCS	
	SZ-0061 L-OBG BKT PIN (L) +0.2MM	88 PCS	
	SZ-0062 L-OBG BKT PIN (M) +0.2MM	88 PCS	
	SZ-0063 L-OBG BKT PIN (S) +0.2MM	88 PCS	
	SZ-0064 L-OBG BKT PIN (L) +0.4MM	20 PCS	
	SZ-0065 L-OBG BKT PIN (M) +0.4MM	20 PCS	
	SZ-0066 L-OBG BKT PIN (S) +0.4MM	20 PCS	
	SZ-0067 L-OBG BKT PIN (L) +0.6MM	10 PCS	
	SZ-0068 L-OBG BKT PIN (M) +0.6MM	10 PCS	
	SZ-0069 L-OBG BKT PIN (S) +0.6MM	10 PCS	
	SZ-0070 L-OBG SLEEVE	88 PCS	

- TO BE CONTINUED -

TOSHIBA

TOSHIBA CORPORATION
TOSHIBA BUILDING,1-1,SHIBAURA 1-CHOME,
MINATO-KU,TOKYO 105,JAPAN

PHONE:TOKYO(03)3457-2416
CABLE:TOSHIBA TOKYO
TELEX:J22587 (TOSHIBA)
FACSIMILE:TOKYO(03)3457-4792

Customer : USA, INTERMOUNTAIN GENERATING S (XUIN2)

PACKING LIST

Works: KEIHIN PRODUCT OPERATIONS	Manufacturing No. M246152	Date: JUL. 23, 2010
Case No. INT2-TSB-T-014	Packing Style:	Invoice No.
Net Weight:	Dimension:	
Gross Weight:	Dimension:	
Net Weight:	M'ment:	
Gross Weight:	M'ment:	

Item No.	Description		Quantity	Remarks
	SZ-0071	L-OCT BKT PIN (L) +0.2MM	88 PCS	
	SZ-0072	L-OCT BKT PIN (M) +0.2MM	88 PCS	
	SZ-0073	L-OCT BKT PIN (S) +0.2MM	88 PCS	
	SZ-0074	L-OCT BKT PIN (L) +0.4MM	20 PCS	
	SZ-0075	L-OCT BKT PIN (M) +0.4MM	20 PCS	
	SZ-0076	L-OCT BKT PIN (S) +0.4MM	20 PCS	
	SZ-0077	L-OCT BKT PIN (L) +0.6MM	10 PCS	
	SZ-0078	L-OCT BKT PIN (M) +0.6MM	10 PCS	
	SZ-0079	L-OCT BKT PIN (S) +0.6MM	10 PCS	
	SZ-0080	L-OCT SLEEVE	88 PCS	
	SZ-0081	L-OCG BKT PIN (L) +0.2MM	88 PCS	
	SZ-0082	L-OCG BKT PIN (M) +0.2MM	88 PCS	
	SZ-0083	L-OCG BKT PIN (S) +0.2MM	88 PCS	
	SZ-0084	L-OCG BKT PIN (L) +0.4MM	20 PCS	
	SZ-0085	L-OCG BKT PIN (M) +0.4MM	20 PCS	
	SZ-0086	L-OCG BKT PIN (S) +0.4MM	20 PCS	
	SZ-0087	L-OCG BKT PIN (L) +0.6MM	10 PCS	
	SZ-0088	L-OCG BKT PIN (M) +0.6MM	10 PCS	

- TO BE CONTINUED -

TOSHIBA

TOSHIBA CORPORATION
TOSHIBA BUILDING,1-1,SHIBAURA 1-CHOME,
MINATO-KU,TOKYO 105,JAPAN

PHONE:TOKYO(03)3457-2416
CABLE:TOSHIBA TOKYO
TELEX:J22587 (TOSHIBA)
FACSIMILE:TOKYO(03)3457-4792

Customer : USA, INTERMOUNTAIN GENERATING S (XUIN2)

PACKING LIST

Works: KEIHIN PRODUCT OPERATIONS	Manufacturing No. M246152	Date: JUL. 23, 2010
Case No. INT2-TSB-T-014	Packing Style:	Invoice No.
Net Weight:	Dimension:	
Gross Weight:	Dimension:	
Net Weight:	M'ment:	
Gross Weight:	M'ment:	

Item No.	Description	Quantity	Remarks
	SZ-0089 L-OCG BKT PIN (S) +0.6MM	10 PCS	
	SZ-0090 L-OCG SLEEVE	88 PCS	
	- CONCLUDED -		

IP7018140

IGS09-03 LP Turbine Last Stage Bucket Replacement Proposals Evaluation

	Toshiba	MDA	TurboCare	GE (a)	GE (b)
Quoted Price	**9,994,000**	11,506,504	14,196,553	14,504,000	14,998,000
difference	-	1,512,504	4,202,553	4,510,000	5,004,000
Evaluated Price[1]	**10,073,000**	11,585,504		13,954,000	14,448,000
difference	-	1,512,504		3,881,000	4,375,000
Replacement Buckets	6,878,000	na	9,120,000	11,380,000	11,380,000
difference	-		2,242,000	4,502,000	4,502,000
Installation	2,704,000	na	4,487,107	2,612,000	3,106,000
difference	92,000		1,875,107	-	494,000
Rotor NDT	373,000	380,016	538,146	382,000	
difference	-	7,016	165,146	9,000	
Spare LSB's	39,000	not offered	51,300	65,000	
Schedule	28 days	30 days	30 days	30 days	30 days
Penalty	$2,000/hr >30days	$10,000/hr >32 days	$10,000/hr >32 days	$10,000/hr >32 days	
maximium penalty	35.2 days 499,700			35 days 1,450,400	
Bonus	$2,000/hr <26 days	$10,000/hr <28 days	$10,000/hr <28 days	$10,000/hr <28 days	$10,000/hr <28
maximum bonus	20.8 days 499,700			25 days 1,450,400	25 days 1,450,400
Rotor Torsional Frequency Analysis	included in quote	included in quote	included in quote	included in quote	included in quote
Eng Study for Increased Steam Flow (not required)	na	na	na	550,000	550,000
Bucket Design	Toshiba upgraded GE design (CC with loose covers and sleeves)	Hitachi CCB integral cover & tie-boss	GE redesign tuned to avoid resonance freq at tip area	Original Jethete design with EBW shields added	Original Jethete design with EBW shields added
Installed Rows (30" LSB)	85			>200	
Retrofit Rows (30" LSB USA only)	16			48	
Manufacture Location	Toshiba GE Turbine Components - Japan	Hitachi - Japan	TurboCare - USA	Toshiba GE Turbine Components - Japan	
Forging Location	Wixi Turbine Blade Co. - China or Canton - USA	Japan	USA	USA	USA

IP7018141

IGS09-03 LP Turbine Last Stage Bucket Replacement Proposals Evaluation

	Toshiba	MDA	TurboCare	GE (a)	GE (b)
Installation	ReGenco	MDA		GE	GE
Pin Removal -	3 Hilti shots/pin included, drilling extra, milling removal available	Hilti shots on 15% of pins (238 pins/unit) included, drilling extra		5% stuck pin removal (79 pins/unit) included	cut all buckets, mill out dovetails
Stuck pin removal costs					
5% (79/unit)	79,000	79,000		-	-
10% (158/unit)	158,000	158,000		94,800	-
15% (238/unit)	238,000	238,000		189,600	-
> 15% (destructive removal)	513,760			494,000	-
Payment Schedule					
contract execution	15%				
bucket shipment	60%				
bkts received on-site	20%				
completion of install	5%				

(1) Evaluated Price is the quoted price adjusted for 30 day installation bonus/penalties, 5% stuck pin removal, and engineering studies not requested in the specifications.

Toshiba referrences:
Kelly Stemmler, Machinery Services Fleet Engr, 610-657-1703, Montour U1 LP retrofits, 4 rows 30" LSB's on GE G3, 2008.
Randall Moyer, Station Planner & Turbine Engr, 717-266-7583, Brunner Island U3 LP retrofits, 4 rows 30" LSB's on GE G3, 2006.

GE options:
a. new ebw shielded buckets, old buckets removed by driving all pins out.
b. new ebw shielded buckets, destructive removal of old buckets by cutting and milling.

IP7018142

IGS09-03 LP Turbine Last Stage Bucket Replacement Proposals Evaluation

	Toshiba	MDA	TurboCare	GE (a)	GE (b)
Quoted Price	**9,994,000**	11,506,504	14,196,553	14,504,000	14,998,000
difference	-	1,512,504	4,202,553	4,510,000	5,004,000
Evaluated Price[1]	**10,073,000**	11,585,504		13,954,000	14,448,000
difference	-	1,512,504		3,881,000	4,375,000
Replacement Buckets	6,878,000	na	9,120,000	11,380,000	11,380,000
difference	-		2,242,000	4,502,000	4,502,000
Installation	2,704,000	na	4,487,107	2,612,000	3,106,000
difference	92,000		1,875,107	-	494,000
Rotor NDT	373,000	380,016	538,146	382,000	
difference	-	7,016	165,146	9,000	
Spare LSB's	39,000	not offered	51,300	65,000	
Schedule	28 days	30 days	30 days	30 days	30 days
Penalty	$2,000/hr >30days	$10,000/hr >32 days	$10,000/hr >32 days	$10,000/hr >32 days	
maximium penalty	35.2 days 499,700			35 days 1,450,400	
Bonus	$2,000/hr <26 days	$10,000/hr <28 days	$10,000/hr <28 days	$10,000/hr <28 days	$10,000/hr <28
maximum bonus	20.8 days 499,700			25 days 1,450,400	25 days 1,450,400
Rotor Torsional Frequency Analysis	included in quote	included in quote	included in quote	included in quote	included in quote
Eng Study for Increased Steam Flow (not required)	na	na	na	550,000	550,000
Bucket Design	Toshiba upgraded GE design (CC with loose covers and sleeves)	Hitachi CCB integral cover & tie-boss	GE redesign tuned to avoid resonance freq at tip area	Original Jethete design with EBW shields added	Original Jethete design with EBW shields added
Installed Rows (30" LSB)	85			>200	
Retrofit Rows (30" LSB USA only)	16			48	
Manufacture Location	Toshiba GE Turbine Components - Japan	Hitachi - Japan	TurboCare - USA	Toshiba GE Turbine Components - Japan	
Forging Location	Wixi Turbine Blade Co. - China or Canton - USA	Japan	USA	USA	USA

IP7018143

IGS09-03 LP Turbine Last Stage Bucket Replacement Proposals Evaluation

	Toshiba	MDA	TurboCare	GE (a)	GE (b)
Installation	ReGenco	MDA		GE	GE
Pin Removal -	3 Hilti shots/pin included, drilling extra, milling removal available	Hilti shots on 15% of pins (238 pins/unit) included, drilling extra		5% stuck pin removal (79 pins/unit) included	cut all buckets, mill out dovetails
Stuck pin removal costs					
5% (79/unit)	79,000	79,000		-	-
10% (158/unit)	158,000	158,000		94,800	-
15% (238/unit)	238,000	238,000		189,600	-
> 15% (destructive removal)	513,760			494,000	-
Payment Schedule					
contract execution	15%				
bucket shipment	60%				
bkts received on-site	20%				
completion of install	5%				

(1) Evaluated Price is the quoted price adjusted for 30 day installation bonus/penalties, 5% stuck pin removal, and engineering studies not requested in the specifications.

Toshiba referrences:
Kelly Stemmler, Machinery Services Fleet Engr, 610-657-1703, Montour U1 LP retrofits, 4 rows 30" LSB's on GE G3, 2008.
Randall Moyer, Station Planner & Turbine Engr, 717-266-7583, Brunner Island U3 LP retrofits, 4 rows 30" LSB's on GE G3, 2006.

GE options:
a. new ebw shielded buckets, old buckets removed by driving all pins out.
b. new ebw shielded buckets, destructive removal of old buckets by cutting and milling.

IP7018144