PERFORMANCE TESTING SCHEDULE
IGS Unit 2 Turbine Cycle Acceptance Testing

	TEST #	DATE & TIME	LOAD MWgross	TEST POINT
Mon Day 1	1	04/08/2002 7:00- 12:00	870	VWO/ 2100psi
	2	04/08/2002 13:00- 18:00	895	VWO/ 2200psi
Tues Day 2	3	04/09/2002 7:00- 12:00	900	throttled/ 2300psi
	4	04/09/2002 13:00- 18:00	940	VWO/ 2300psi
Wed Day 3	5	04/10/2002 7:00- 12:00	950	throttled/ 2350psi
	6	04/10/2002 13:00- 18:00	925	throttled/ 2325psi
Thur Day 4	7	04/11/2002 7:00- 12:00	975	VWO/ 2400psi
	8	04/11/2002 13:00- 18:00	975	VWO/ 2400psi
Fri Day 5	9	04/12/2002 7:00- 12:00	???	makeup tests
	10	04/12/2002 13:00- 18:00	???	makeup tests

NOTES: Loads are approximate and may very +/- 10 MW

markup

Trevor

TURBINE CYCLE PERFORMANCE TESTING | IGS Unit # 2 | Test # _____

***** CYCLE ISOLATION CHECKOFF SHEETS ***** | Date: _____ | Time: _____ | Name: _____

VALVE CLASSIFICATION: ** CRITICAL VALVE LIST**

Class 1*- CRITICAL VALVES- valves which are required to be opened immediately due to operational upset or unit trip

Class 1- Open valves just prior to test and standby, valves need to be opened at the end of each test

Class 2- Close valves up to 2 hours prior to each test (before Class I valves), re-open valves after Class I valves

Class 3- Close valves at the beginning of the day and open at the end of the day

Class NC- Non-Critical Valves- verify normally closed valves are closed (and not leaking) and normally opened valves are open

						VALVE POSITION		CHECKOFF with Initials				Downstream	
VALVE NUMBER	DESCRIPTION	P&ID	Floor	Location	CLASS	Normal	Test	Open	Close	Open	Close	Temp (F)	NOTES:
2HRA-BV-0019	Condensate Normal Drawoff	M2020	1	SW corner of condenser	1	open	close						
2HRA-BV-0020	Condensate Normal Drawoff	M2020	1	SW corner of condenser	1	open	close						
2TEE-BV-0015	Flash Tank Altrn Drain to Cndr	M2077	1	southwest of condenser	1*	open	close						
2TEE-BV-0022	Flash Tank Altrn Drain to Cndr	M2077	1	southwest of condenser	1*	open	close						
2TEE-BV-0011	LP Htr 3 Altr HLvl Drain	M2077	1	west of condenser	1*	open	close						
2TEE-BV-0019	LP Htr 3 Altr HLvl Drain	M2077	1	west of condenser	1*	open	close						
2TEE-BV-0013	LP Htr 2 Altr HLvl Drain	M2077	1	west of condenser	1*	open	close						
2TEE-BV-0021	LP Htr 2 Altr HLvl Drain	M2077	1	west of condenser	1*	open	close						
2PSA-BV-0082	Aux Stm ~~Trap 5~~ Orifice 1	M2008	1	south of EHC	2								
2FWD-BV-0121	Makeup to Regen Pumps	M2038B	1	Cond Polisher Regen Pumps	3								
2FWD-BV-0125	Makeup to Regen Pumps	M2038B	1	Cond Polisher Regen Pumps	3								
2TEE-BV-0009	LP Htr 4 Altr HLvl Drain	M2077	2	west of condenser	1*								
2TEE-BV-0017	LP Htr 4 Altr HLvl Drain	M2077	2	west of condenser	1*								
2FWC-BV-0026	Deaerator Recirc to Cond	M2037	2	west of condenser	1								
2FWC-BV-0027	Deaerator Recirc to Cond	M2037	2	west of condenser	1								
2FWC-MBV-0090	Deaerator Recirc to Cond from CR	M2037	2	west of condenser	1								
2HRA-BV-0030	Condensate Normal Makeup	M2020	2	southwest of condenser	1								
2HRA-BV-0031	Condensate Normal Makeup	M2020	2	southwest of condenser	1								
2HRA-BV-0032	Condensate Normal Makeup	M2020	2	southwest of condenser	1								
2TGC-BV-0010	Main Stm Supply to Turb Seals blow stem packing / backseated	M2080A	2	west of M Stm Header	1*								
2FWA-BV-0388	HP Stop Valve 1B1 stem leakoff	M2035C	2	NW of Condenser	1								
2FWA-BV-0390	HP Stop Valve 1B1 seat drain	M2035C	2	NW of Condenser	1								
2FWA-BV-0391	HP Stop Valve 1A1 seat drain	M2035C	2	N of Condenser	1								
2SGJ-BV-0090	Cond to CRH Desuperhtr 2	M2071	2		1								
2HRB-BV-0109	Separator 1D Makeup Flow	M2021	2	Cond Vacuum Pump D	2								
2HRB-BV-0110	Separator 1C Makeup Flow	M2021	2	Cond Vacuum Pump C	2								
2HRB-BV-0111	Separator 1B Makeup Flow	M2021	2	Cond Vacuum Pump B	2								
2HRB-BV-0112	Separator 1A Makeup Flow	M2021	2	Cond Vacuum Pump A	2								
2TGC-BV-0058	Auxiliary Steam to Cold Reheat	M2080A	2	top of valve deck	1								
2SGG-BV-0058	Mn Stm Warming Line	M2069	2	NE of MCC 2A03	3								
2SGG-MBV-0009	Main Steam to BFPT 1A	M2069	3	NE of BFPT 1A	1								
2SGG-MBV-0010	Main Steam to BFPT 1B	M2069	3	SW of BFPT 1B	1								

Key switch

IP7016537

A013/4

2TGA-BV-0005	Exhaust Hood Spray Supply	M2079	~~3~~ 2	by feedwater heater	1								
2TEF-BV-0163	LP Htr 3 Cont Vent to Cond	M2078B	3	LP Htr 3	2								
2TEF-BV-0077	HP Htr 6A Cont Vent to DA	M2078A	3	HP Htr 6A	2								
2TEF-BV-0080	HP Htr 6B Cont Vent to DA	M2078A	3	HP Htr 6B	2								

Add

SGA-BV-136 Superheat Bypass M2063 A 2 west end Leaking
BV-169

Isolated - add to list

T6C-~~MBV-32~~ Reheat Bowl Drain M2080 B 2 north CRY leaking
BV-64

Add

SGG MBV-11 MSFM to Blowdown Tank M2069 2 east of vacuum pumps leaking - hand tighten
-12

IP7016538

Steve Kelly

TURBINE CYCLE PERFORMANCE TESTING | IGS Unit # 2 | Test # _____

***** CYCLE ISOLATION CHECKOFF SHEETS ***** | Date: _____ | Time: _____ | Name: _____

VALVE CLASSIFICATION: ** CRITICAL VALVE LIST**

Class 1*- CRITICAL VALVES- valves which are required to be opened immediately due to operational upset or unit trip

Class 1- Open valves just prior to test and standby, valves need to be opened at the end of each test

Class 2- Close valves up to 2 hours prior to each test (before Class I valves), re-open valves after Class I valves

Class 3- Close valves at the beginning of the day and open at the end of the day

Class NC- Non-Critical Valves- verify normally closed valves are closed (and not leaking) and normally opened valves are open

						VALVE POSITION		CHECKOFF with Initials				Downstream	
VALVE NUMBER	DESCRIPTION	P&ID	Floor	Location	CLASS	Normal	Test	Open	Close	Open	Close	Temp (F)	NOTES:
2TED-BV-0019	HP Heater 8A Alternate Drain	M2076	1	East of condenser	1*	open	close						
2TED-BV-0020	HP Heater 8A Alternate Drain	M2076	1	East of condenser	1*	open	close						
2TED-BV-0027	HP Heater 7A Alternate Drain	M2076	1	East of condenser	1*	open	close						
2TED-BV-0028	HP Heater 7A Alternate Drain	M2076	1	East of condenser	1*	open	close						
2TED-BV-0035	HP Heater 6A Alternate Drain	M2076	1	East of condenser	1*	open	close						
2TED-BV-0036	HP Heater 6A Alternate Drain	M2076	1	East of condenser	1*	open	close						
2TED-BV-0021	HP Heater 8B Alternate Drain	M2076	1	East of condenser	1*	open	close						
2TED-BV-0022	HP Heater 8B Alternate Drain	M2076	1	East of condenser	1*	open	close						
2TED-BV-0029	HP Heater 7B Alternate Drain	M2076	1	East of condenser	1*	open	close						
2TED-BV-0030	HP Heater 7B Alternate Drain	M2076	1	East of condenser	1*	open	close						
2TED-BV-0037	HP Heater 6B Alternate Drain	M2076	1	East of condenser	1*	open	close						
2TED-BV-0038	HP Heater 6B Alternate Drain	M2076	1	East of condenser	1*	open	close						
2TEC-BV-0073	HP Htrs 8A & 8B- extr drain	M2075	1	E of Lube Oil Centrifuge	2	open	close						
2TEC-BV-0075	HP Heaters 8A and 8B Extr Drain	M2075	1	E of Lube Oil Centrifuge	2	open	close						
2TEC-BV-0079	HP Htrs 8A- extr drain	M2075	1	E of Lube Oil Centrifuge	2	open	close						
2TEC-BV-0085	HP Heater 8B Extr Drain	M2075	1	E of Lube Oil Centrifuge	2	open	close						
2TEC-BV-0065	LP Heater 4 Extr Drain	M2075	1	NW corner C Cond ceiling	1	open	close						
2SGJ-BV-0056	Cold Reheat Stm Trap- Inlet	M2071	1	204-B	1	open	close						
2SGJ-BV-0057	Cold Reheat Stm Trap- Outlet	M2071	1	204-B	1	open	close						
2TEC-BV-0027	LP Heater 2 Extr Drain	M2075	1	NW corner of cond	3	open	close						
2TEC-BV-0031	LP Heater 2 Extr Drain	M2075	1	bottom row	3	open	close						
2TEC-BV-0035	LP Heater 3 Extr Drain	M2075	1	"	3	open	close						
2TEC-BV-0039	LP Heater 3 Extr Drain	M2075	1	"	3	open	close						
2TEC-BV-0043	LP Heater 4 Extr Drain	M2075	1	"	3	open	close						
2TEC-BV-0047	LP Heater 4 Extr Drain	M2075	1	"	3	open	close						
2TEC-BV-0003	LP Heater 2 Extr Drain	M2075	1	NE corner of cond	3	open	close						
2TEC-BV-0007	LP Heater 2 Extr Drain	M2075	1	"	3	open	close						
2TEC-BV-0011	LP Heater 3 Extr Drain	M2075	1	"	3	open	close						
2TEC-BV-0015	LP Heater 3 Extr Drain	M2075	1	"	3	open	close						
2TEC-BV-0019	LP Heater 4 Extr Drain	M2075	1	"	3	open	close						
2TEC-BV-0023	LP Heater 4 Extr Drain	M2075	1	"	3	open	close						
2TEC-BV-0051	LP Heater 2 Extr Drain	M2075	1	NW corner of cond	3	open	close						
2TEC-BV-0055	LP Heater 2 Extr Drain	M2075	1	top row	3	open	close						
2TEC-BV-0059	LP Heater 3 Extr Drain	M2075	1	"	3	open	close						
2TEC-BV-0063	LP Heater 3 Extr Drain	M2075	1	"	3	open	close						
2TEC-BV-0067	LP Heater 4 Extr Drain	M2075	1	"	3	open	close						
2TEC-BV-0071	LP Heater 4 Extr Drain	M2075	1	"	3	open	close						

IP70165539

Dan Bk

*** CYCLE ISOLATION CHECKOFF SHEETS *** Date: Time: Name:

VALVE CLASSIFICATION: ** CRITICAL VALVE LIST**

Class 1*- CRITICAL VALVES- valves which are required to be opened immediately due to operational upset or unit trip

Class 1- Open valves just prior to test and standby, valves need to be opened at the end of each test

Class 2- Close valves up to 2 hours prior to each test (before Class I valves), re-open valves after Class I valves

Class 3- Close valves at the beginning of the day and open at the end of the day

Class NC- Non-Critical Valves- verify normally closed valves are closed (and not leaking) and normally opened valves are open

						VALVE POSITION		CHECKOFF with Initials				Downstream	
VALVE NUMBER	DESCRIPTION	P&ID	Floor	Location	CLASS	Normal	Test	Open	Close	Open	Close	Temp (F)	NOTES:
2SGF-BV-0065	Downcomer Drain Blowdown Manifol	M2068	2	S side of boiler									
2TEF-BV-0076	HP Htr 7A Cont Vent to DA	M2078A	5	HP Htr 7A	2								
2TEF-BV-0079	HP Htr 7B Cont Vent to DA	M2078A	5	HP Htr 7B	2								
2TEF-BV-0162	LP Htr 4 Cont Vent to Cond	M2078B	5	LP Htr 4	2								
2TEF-BV-0075	HP Htr 8A Cont Vent to DA	M2078A	6	HP Htr 8A	2								
2TEF-BV-0078	HP Htr 8B Cont Vent to DA	M2078A	6	HP Htr 8B	2								
2PSA-MBV-0017	Cold Reheat Supply to Aux Stm	M2008	9	behind east elevator	2								
2PSA-BV-0012	Cold Reheat Supply to Aux Stm	M2008	9	behind east elevator	2								
2PSA-BV-0014	Cold Reheat Supply to Aux Stm	M2008	9	behind east elevator	2								
2SGF-BV-0055	Lwr Conveyor Pass Header	M2068	10	east	3								
2SGF-BV-0057	Lwr Conveyor Pass Header	M2068	10	east	3								
2SGF-BV-0035	Lwr Conveyor Pass Header	M2068	10	west	3								
2SGF-BV-0028	Lwr Conveyor Pass Header	M2068	10	west	3								
2FWA-BV-0037	BFP 1A Recirc	M2035A	13	east	1*								
2FWA-BV-0038	BFP 1B Recirc	M2035A	13		1*								
2TEF-BV-0003	DA cont vents to atmos	M2078A	14	top of DA	2								
2TEF-BV-0007	DA cont vents to atmos	M2078A	14	top of DA	2								
2TEF-BV-00011	DA cont vents to atmos	M2078A	14	top of DA	2								
2SGF-BV-0041	Sec SH Outlet Header	M2068	15	west	3								
2SGF-BV-0043	Sec SH Intermed Header	M2068	15	west	3								
2SGF-BV-0045	Sec SH Intermed Header	M2068	15	west	3								
2SGF-BV-0049	Sec SH Platen Inlet Header	M2068	15	west	3								
2SGF-BV-0051	Roof Inlet Header	M2068	15	west	3								
2PSA-BV-0021	Aux Pegging Stm to Deaerator	M2008	15	N of east elevator	1*								
2PSA-BV-0022	Aux Pegging Stm to Deaerator	M2008	15	N of east elevator	1*								
2PSA-BV-0058	SSH to Aux Stm	M2008	17	west side	2								
2SGA-BV-0010	MStm Supply to Aux Stm Header	M2063A	17	west side	2								
2SGA-BV-0195	Steam Trap 2	M2063A			2								
2SGA-BV-0199	Steam Trap 3	M2063B	18										
2SGA-BV-0003	Cont Blowdown	M2063B	18	E end of the drum	2								
2SGA-MBV-0004	Cont Blowdown	M2063B	18	E end of the drum	2								
2SGA-MBV-0002	Stm Supply to Aux Stm	M2063B	18	S end of the drum	2								

Tough

IP7016540

2SGA-BV-0001	Stm Supply to Aux Stm	M2063B	18	S end of the drum	2								

IP7016541

Russ

TURBINE CYCLE PERFORMANCE TESTING | IGS Unit # 2 | Test # _____

***** CYCLE ISOLATION CHECKOFF SHEETS ***** | Date: _____ | Time: _____ | Name: _____

VALVE CLASSIFICATION: ** CRITICAL VALVE LIST**

Class 1*- CRITICAL VALVES- valves which are required to be opened immediately due to operational upset or unit trip

Class 1- Open valves just prior to test and standby, valves need to be opened at the end of each test

Class 2- Close valves up to 2 hours prior to each test (before Class I valves), re-open valves after Class I valves

Class 3- Close valves at the beginning of the day and open at the end of the day

Class NC- Non-Critical Valves- verify normally closed valves are closed (and not leaking) and normally opened valves are open

						VALVE POSITION		CHECKOFF with Initials				Downstream	
VALVE NUMBER	DESCRIPTION	P&ID	Floor	Location	CLASS	Normal	Test	Open	Close	Open	Close	Temp (F)	NOTES:
2SAC-BV-0017	Sample 1 Makeup to Cond	M2054A	1	Water Lab	2								
2SAC-BV-0030	Sample 1 Makeup to Cond	M2054A	1	Water Lab	2								
2SAC-BV-0019	Sample 3 Demin 1A Outlet	M2054A	1	Water Lab	2								
2SAC-BV-0032	Sample 3 Demin 1A Outlet	M2054A	1	Water Lab	2								
2SAC-BV-0020	Sample 4 Demin 1B Outlet	M2054A	1	Water Lab	2								
2SAC-BV-0033	Sample 4 Demin 1B Outlet	M2054A	1	Water Lab	2								
2SAC-BV-0021	Sample 5 Demin 1C Outlet	M2054A	1	Water Lab	2								
2SAC-BV-0034	Sample 5 Demin 1C Outlet	M2054A	1	Water Lab	2								
2SAC-BV-0022	Sample 6 Demin 1D Outlet	M2054A	1	Water Lab	2								
2SAC-BV-0035	Sample 6 Demin 1D Outlet	M2054A	1	Water Lab	2								
2SAC-BV-0023	Sample 7 Cond Polisher Outlet	M2054A	1	Water Lab	2								
2SAC-BV-0036	Sample 7 Cond Polisher Outlet	M2054A	1	Water Lab	2								
2SAC-BV-0001	Smpl 8 Cond after Gland Cond	M2054A	1	Water Lab	2								
2SAC-BV-0002	Sample 9 DA Inlet	M2054A	1	Water Lab	2								
2SAC-BV-0024	Sample 9 DA Inlet	M2054A	1	Water Lab	2								
2SAC-BV-0037	Sample 9 DA Inlet	M2054A	1	Water Lab	2								
2SAC-BV-0026	Sample 11 Econ Inlet	M2054A	1	Water Lab	2								
2SAC-BV-0039	Sample 11 Econ Inlet	M2054A	1	Water Lab	2								
2SAC-BV-0003	Sample 13 Satuated Steam	M2054A	1	Water Lab	2								
2SAC-BV-0004	Sample 14 Main Steam	M2054A	1	Water Lab	2								
2SAC-BV-0028	Sample 14 Main Steam	M2054A	1	Water Lab	2								
2SAC-BV-0041	Sample 14 Main Steam	M2054A	1	Water Lab	2								

IP7016542

TURBINE CYCLE PERFORMANCE TESTING					IGS Unit # 2		Test # _____				
*** CYCLE ISOLATION CHECKOFF SHEETS ***					Date: _____		Time: _____		Name: _____		

VALVE CLASSIFICATION:

Class I*- CRITICAL VALVES- valves which are required to be opened immediately due to operational upset or unit trip

Class I- Open valves just prior to test and standby, valves need to be opened at the end of each test

Class II- Close valves up to 2 hours prior to each test (before Class I valves), re-open valves after Class I valves

Class III- Close valves at the beginning of the day and open at the end of the day

Class IV- Non-Critical Valves- verify normally closed valves are closed (and not leaking) and normally opened valves are open

LOCATION: CONDENSER CONNECTIONS- EAST BASEMENT

			LOCATION					VALVE POSITION		CHECKOFF		Downstream	
VALVE NUMBER	DESCRIPTION	P&ID	Floor	Near	Area	Termintaion Point	CLASS	Normal	Test	Initials		Temp (F)	NOTES:
TGC-BV-65	Drain from TDV to Htr	M2080A	2	ss-plat	Diag A #1	Cond TB end bsmt						____F	
TGC-BV-67	Drain from TDV to Htr	M2080A	2	ss-plat	Diag A #1	Cond TB end bsmt						____F	
FWA-MBV-189	Wrmup Drain from FW to Htr 6	M2035A			Diag A #2	Cond TB end bsmt						____F	
TGC-MBV-31	RHT bowl drain to cond	M2080B	1	s-ehc	Diag A #3	Cond TB end bsmt						____F	
TGC-MBV-37	Control Valve drain to cond.	M2080B	2	convlvs	Diag A #4	Cond TB end bsmt						____F	
TGC-MBV-39	Control Valve drain to cond.	M2080B	2	convlvs	Diag A #5	Cond TB end bsmt						____F	
TGC-MBV-40	Control Valve drain to cond.	M2080B	2	convlvs	Diag A #6	Cond TB end bsmt						____F	
TGC-MBV-33	Stop Valve drain to cond	M2080B	2	stpvlvs	Diag A #7	Cond TB end bsmt						____F	
TGC-MBV-34	Stop Valve drain to cond	M2080B	2	stpvlvs	Diag A #8	Cond TB end bsmt						____F	
TGC-MBV-36	Stop Valve drain to cond	M2080B	2	stpvlvs	Diag A #9	Cond TB end bsmt						____F	
TGC-MBV-35	Stop Valve drain to cond	M2080B	2	stpvlvs	Diag A #10	Cond TB end bsmt						____F	
TGC-MBV-32	RHT bowl drain to cond	M2080B	1	s-ehc	Diag A #11	Cond TB end bsmt						____F	
SGJ-MBV-18	CRH low point drains	M2071	1	s-ehc	Diag A #12	Cond TB end bsmt						____F	
SGJ-MBV-14	HRH low point drains	M2071	1	s-ehc	Diag A #13	Cond TB end bsmt						____F	
SGJ-MBV-16	HRH low point drains	M2071	1	s-ehc	Diag A #13	Cond TB end bsmt						____F	
SGG-MBV-25	MS Byp to cond low pt drain	M2069	2	ne-cond	Diag A #14	Cond TB end bsmt						____F	
TGC-MBV-38	Control Valve drain to cond	M2080B	2	convlvs	Diag A #15	Cond TB end bsmt						____F	
TGC-MBV-49	MS lead drain to cond	M2080	1	sw-ehc	Diag A #16	Cond TB end bsmt						____F	
TGC-ACV-4	TDV to cond	M2080A	2.5	stmslplt	Diag A #17	Cond TB end bsmt						____F	
TGA-ABV-20	Equalizer valve	M2079	2		Diag A #18	Cond TB end bsmt						____F	
TED-ACV-11	Htr 6A hi level dump	M2076	1	e-cond	Diag A #20	Cond TB end bsmt						____F	
TED-ACV-12	Htr 6B hi level dump	M2076	1	e-cond	Diag A #21	Cond TB end bsmt						____F	
TED-ACV-3	Htr 8A hi level dump	M2076	1	e-cond	Diag A #22	Cond TB end bsmt						____F	
TED-ACV-4	Htr 8B hi level dump	M2076	1	e-cond	Diag A#24	Cond TB end bsmt						____F	
TED-ACV-8	Htr 7B hi level dump	M2076	1	e-cond	Diag A#25	Cond TB end bsmt						____F	
TGC-ORF-8	SSH low point drain	M2080A	1		Diag A#26	Cond TB end bsmt						____F	
TED-ACV-7	Htr 7A hi level dump	M2076	1	e-cond	Diag A#27	Cond TB end bsmt						____F	
TEC-ACV-146	Drn frm LPextr stm to BFPT A	M2075	1	e-cond	Diag A#28	Cond TB end bsmt						____F	

LOCATION: HP DRAIN HEADER

			LOCATION					VALVE POSITION		CHECKOFF		Downstream	
VALVE NUMBER	DESCRIPTION	P&ID	Floor	Near	Area	Termintaion Point	CLASS	Normal	Test	Initials		Temp (F)	NOTES:
SGI-MBV-178	Air heater sootblowers drain	M2070	1	E-EHC	DiagB1#1	HP Drain Header						____F	
SGI-MBV-35	Boiler sootblowers drain	M2070	1	E-EHC	DiagB1#2	HP Drain Header						____F	
TEC-ACV-14	4th stg extr (drain) to HTR 8A & 8	M2075	1	E-EHC	DiagB1#3	HP Drain Header						____F	

IP7016543

TEC-ACV-80	4th stg extr (drain) to HTR 8A	M2075	1	E-EHC	DiagB1#4	HP Drain Header						F	
TEC-ACV-140	14th stg extr (drain) to BFPT 1B	M2075	1	E-EHC	DiagB1#5	HP Drain Header						F	
TEC-ACV-128	14th stg extr (drain) to DA	M2075	1	E-EHC	DiagB1#6	HP Drain Header						F	
TEC-ACV-116	14th stg extr (drain) to DA	M2075	1	E-EHC	DiagB1#7	HP Drain Header						F	
TEC-ACV-86	4th stg extr (drain) to HTR 8B	M2075	1	E-EHC	DiagB1#8	HP Drain Header						F	
TEC-ACV-92	11th stg extr (drain) to HTR 6A&B	M2075	1	E-EHC	DiagB1#9	HP Drain Header						F	
TEC-ACV-98	11th stg extr (drain) to HTR 6A	M2075	1	E-EHC	DiagB1#10	HP Drain Header						F	
TEC-ACV-101	11th stg extr (drain) to HTR 6B	M2075	1	E-EHC	DiagB1#11	HP Drain Header						F	
TEC-ACV-134	14th stg extr (drain) to BFPT 1A	M2075	1	E-EHC	DiagB1#12	HP Drain Header						F	
TEC-ACV-122	14th stg extr (drain) to BFPT 1A&	M2075	1	E-EHC	DiagB1#13	HP Drain Header						F	
TEC-ACV-110	14th stg extr (drain) to DA	M2075	1	E-EHC	DiagB1#14	HP Drain Header						F	
PSA-ORF-1	Aux Stm Hdr orificed drain line	M2008	1	S-EHC	DiagB1#15	HP Drain Header						F	
LOCATION: LP DRAIN HEADER													
					LOCATION			VALVE POSITION		CHECKOFF		Downstream	
VALVE NUMBER	DESCRIPTION	P&ID	Floor	Near	Area	Termintaion Point	CLASS	Normal	Test	Initials		Temp (F)	NOTES:
TEC-ACV-2	HTR 2 extr from A hood (drain)	M2075	1	ne-cond	DiagB2#1	LP Drain Header						F	
TEC-ACV-6	HTR 2 extr from A hood (drain)	M2075	1	ne-cond	DiagB2#2	LP Drain Header						F	
TEC-ACV-10	HTR 3 extr from A hood (drain)	M2075	1	ne-cond	DiagB2#3	LP Drain Header						F	
TEC-ACV-14	HTR 3 extr from A hood (drain)	M2075	1	ne-cond	DiagB2#4	LP Drain Header						F	
TEC-ACV-18	HTR 4 extr from A hood (drain)	M2075	1	ne-cond	DiagB2#5	LP Drain Header						F	
TEC-ACV-22	HTR 4 extr from A hood (drain)	M2075	1	ne-cond	DiagB2#6	LP Drain Header						F	
TEC-ACV-50	Extr to HTR 2 from C hood drain	M2075	1	nw-cond	DiagB3#1	LP Drain Header						F	

IP70165544

TEC-ACV-54	Extr to HTR 2 from C hood drain	M2075	1	nw-cond	DiagB3#2	LP Drain Header						____F	
TEC-ACV-58	Extr to HTR3 from C hood drain	M2075	1	nw-cond	DiagB3#3	LP Drain Header						____F	
TEC-ACV-62	Extr to HTR3 from C hood drain	M2075	1	nw-cond	DiagB3#4	LP Drain Header						____F	
TEC-ACV-66	Extr to HTR 4 from C hood drain	M2075	1	nw-cond	DiagB3#5	LP Drain Header						____F	
TEC-ACV-70	Extr to HTR 4 from C hood drain	M2075	1	nw-cond	DiagB3#6	LP Drain Header						____F	
TEC-ACV-26	Extr to HTR 2 from B hood drain	M2075	1	nw-cond	DiagB3#7	LP Drain Header						____F	
TEC-ACV-30	Extr to HTR 2 from B hood drain	M2075	1	nw-cond	DiagB3#8	LP Drain Header						____F	
TEC-ACV-34	Extr to HTR 3 from B hood drain	M2075	1	nw-cond	DiagB3#9	LP Drain Header						____F	
TEC-ACV-38	Extr to HTR 3 from B hood drain	M2075	1	nw-cond	DiagB3#10	LP Drain Header						____F	
TEC-ACV-42	Extr to HTR 4 from B hood drain	M2075	1	nw-cond	DiagB3#11	LP Drain Header						____F	
TEC-ACV-46	Extr to HTR 4 from B hood drain	M2075	1	nw-cond	DiagB3#12	LP Drain Header						____F	

LOCATION: CONDENSER CONNECTIONS-NORTH MEZZANINE

			LOCATION					VALVE POSITION		CHECKOFF		Downstream	
VALVE NUMBER	DESCRIPTION	P&ID	Floor	Near	Area	Termintaion Point	CLASS	Normal	Test	Initials		Temp (F)	NOTES:
FWA-ABV-303	BFPT "A" HP Stop Vlv Drain	M2035C	2	N-cond	Diag C #6	dwncmr drns hdr						____F	
FWA-ABV-309	BFPT"A"LP stp vlv below stdr	M2035C	2	N-cond	Diag C #7	Cond-A NorthMez						____F	
FWA-ABV-305	BFPT"A" HP Stop Valve Drain	M2035C	2	N-cond	Diag C #8	Cond-A NorthMez						____F	
FWA-ABV-311	BFPT"A" First Stage Drain	M2035C	2	ne-cnd	Diag C #9	Cond-A NorthMez						____F	
TEF-BV-162	HTR 4 Vent to Condenser	M2078B	5	HTR4	Diag C #10	Cond-North Mezz						____F	
TEF-BV-163	HTR 3 Vent to Condenser	M2078B	3	HTR3	Diag C #11	Cond-North Mezz						____F	
TEF-BV-164	HTR 2 Vent to Condenser	M2078B	2	HTR2	Diag C #12	Cond-North Mezz						____F	
FWA-ABV-312	BFPT"B" First Stage Drain	M2035C	2	nw-cnd	Diag C #13	Cond-C NorthMez						____F	
FWA-ABV-306	BFPT"B" HP Stop Valve Drain	M2035C	2	N-cond	Diag C #14	Cond-C NorthMez						____F	
FWA-ABV-310	BFPT"B"LP stpvlv below st dr	M2035C	2	N-cond	Diag C #15	Cond-C NorthMez						____F	
FWA-ABV-304	BFPT"B" HP Stop Valve Drain	M2035C	2	N-cond	Diag C #16	dwncmr drns hdr						____F	

LOCATION: CONDENSER CONNECTIONS-NORTH BASEMENT (check on mezzanine level)

			LOCATION					VALVE POSITION		CHECKOFF		Downstream	
VALVE NUMBER	DESCRIPTION	P&ID	Floor	Near	Area	Termintaion Point	CLASS	Normal	Test	Initials		Temp (F)	NOTES:
TGC-ORF-11	Steam Seal Hdr Low Point Drain	M2080A	2	N-cond	A-cond	Cond-A North Basemt						____F	
FWA-ABV-307	BFPT 1A Stpvlv above seat drn	M2035C	2	N-cond	A-cond	Cond-A North Basemt						____F	
FWA-ABV-308	BFPT 1B Stpvlv above seat drn	M2035C	2	N-cond	C-cond	Cond-C North Basemt						____F	

IP7016545

LOCATION: WEST SIDE BOILER DRAINS

VALVE NUMBER	DESCRIPTION	P&ID	LOCATION Floor	Near	Area	Termintaion Point	CLASS	VALVE POSITION Normal	Test	CHECKOFF Initials		Downstream Temp (F)	NOTES:
SGF-MBV-52	Roof Inlet header drain	M2068	4	fdr dck	west boiler	W boil drn bldwn hdr						____F	
SGF-MBV-50	Sec SH Platen inlet drain header	M2068	4	fdr dck	west boiler	W boil drn bldwn hdr						____F	
SGF-BV-48	Economizer discharge header drn	M2068	4	fdr dck	west boiler	W boil drn bldwn hdr						____F	
SGF-MBV-46	Sec SH Intermediate inlet hdr drain	M2068	4	fdr dck	west boiler	W boil drn bldwn hdr						____F	
SGF-MBV-44	Sec SH Intermediate inlet hdr drain	M2068	4	fdr dck	west boiler	W boil drn bldwn hdr						____F	
PSA-TRP-16	Aux stm from drum and SSH stm t	M2008	14	S-boiler	south boiler	RH outlet bldwn hdr						____F	
SGA-TRP-02	Main stm to Aux stm hdr drain trap	M2063A	16	Wboiler	west boiler	Mn Stm drip pkt drn						____F	
SGF-BV-40	Reheater outlet header drain	M2068	4	fdr dck	west boiler	RH outlet hdr bldwn						____F	
SGF-BV-38	Reheater outlet header drain	M2068	4	fdr dck	west boiler	RH outlet hdr bldwn						____F	
SGF-MBV-36	Lower convect pass hdr drain	M2068	4	fdr dck	west boiler	W boil drn bldwn hdr						____F	
SGF-BV-34	Reheater inlet header drain	M2068	4	fdr dck	west boiler	W boil drn bldwn hdr						____F	
SGF-BV-31	Economizer inlet header drain	M2068	4	fdr dck	west boiler	W boil drn bldwn hdr						____F	
SGA-BV-19	Drum level gage drain	M2063B	18	W-Drum	west boiler	W boil drn bldwn hdr						____F	
SGA-BV-26	Drum level gage drain	M2063B	18	W-Drum	west boiler	W boil drn bldwn hdr						____F	
SGF-MBV-29	Lower convect pass hdr drain	M2068	4	fdr dck	west boiler	W boil drn bldwn hdr						____F	
SGF-MBV-42	Sec SH outlet header drain	M2068	4	fdr dck	west boiler	Blowdown Tank 1						____F	
SGA-BV-32	Drum steam pressure gage drain	M2063B	18	W-Drum	west boiler	W boil drn bldwn hdr						____F	

LOCATION: EAST SIDE BOILER DRAINS

VALVE NUMBER	DESCRIPTION	P&ID	LOCATION Floor	Near	Area	Termintaion Point	CLASS	VALVE POSITION Normal	Test	CHECKOFF Initials		Downstream Temp (F)	NOTES:
SGA-TRP-03	Drum to Aux stm drain stm trp	M2063B	18	S-boiler	east boiler	E boil drn bldwn hdr						____F	
SGF-BV-54	Economizer discharge header drn	M2068	4	sub-fdr	east boiler	E boil drn bldwn hdr						____F	
SGF-MBV-56	Lower convect pass hdr drain	M2068	4	sub-fdr	east boiler	E boil drn bldwn hdr						____F	
SGF-MBV-58	Lower convect pass hdr drain	M2068	4	sub-fdr	east boiler	E boil drn bldwn hdr						____F	
SGA-MBV-4	Drum continuous blowdown	M2068	18	E-drum	east boiler	E boil drn bldwn hdr						____F	
PSA-TRP-01	Cold Reheat Aux Steam Supply	M2008	8	SE-boil	east elev	E boil drn bldwn hdr						____F	

LOCATION: MAIN STEAM DRIP POCKET

VALVE NUMBER	DESCRIPTION	P&ID	LOCATION Floor	Near	Area	Termintaion Point	CLASS	VALVE POSITION Normal	Test	CHECKOFF Initials		Downstream Temp (F)	NOTES:
SGG-MBV-11	Main Steam to Blowdown Tank	M2069	2	SE-boil	NE-SV&CV	Blowdown Tank						____F	
SGG-MBV-12	Main Steam to Blowdown Tank	M2069	2	SE-boil	NE-SV&CV	Blowdown Tank						____F	
SGG-MBV-13	Main Steam to Blowdown Tank	M2069	2	SE-boil	NE-SV&CV	Blowdown Tank						____F	
SGG-MBV-14	Main Steam to Blowdown Tank	M2069	2	SE-boil	NE-SV&CV	Blowdown Tank						____F	

LOCATION: DOWNCOMER DRAINS

VALVE NUMBER	DESCRIPTION	P&ID	LOCATION Floor	Near	Area	Termintaion Point	CLASS	VALVE POSITION Normal	Test	CHECKOFF Initials		Downstream Temp (F)	NOTES:
SGF-BV-59	Drum West End Downcomer	M2068	2	S-boiler	N of Htr 2	DwncmDrnBldnHdr						____F	
SGF-BV-60	Drum West End Downcomer	M2068	2	S-boiler	N of Htr 2	DwncmDrnBldnHdr						____F	
SGF-BV-61	Drum West Shell Downcomer	M2068	2	S-boiler	N of Htr 2	DwncmDrnBldnHdr						____F	

IP7016546

SGF-BV-62	Drum West Shell Downcomer	M2068	2	S-boiler	N of Htr 2	DwncmDrnBldnHdr						F	
SGF-MBV-66	Downcomer Drain Manifold Drain	M2068	2	S-boiler	N of Htr 2	DwncmDrnBldnHdr						F	
SGF-BV-63	Drum Center Shell Downcomer	M2068	2	S-boiler	N of Htr 2	DwncmDrnBldnHdr						F	
SGF-BV-64	Drum Center Shell Downcomer	M2068	2	S-boiler	N of Htr 2	DwncmDrnBldnHdr						F	
SGF-BV-67	Drum East Shell Downcomer	M2068	2	S-boiler	N of Htr 2	DwncmDrnBldnHdr						F	
SGF-BV-68	Drum East Shell Downcomer	M2068	2	S-boiler	N of Htr 2	DwncmDrnBldnHdr						F	
SGF-BV-69	Drum East End Downcomer	M2068	2	S-boiler	N of Htr 2	DwncmDrnBldnHdr						F	
SGF-BV-70	Drum East End Downcomer	M2068	2	S-boiler	N of Htr 2	DwncmDrnBldnHdr						F	

LOCATION: SUPERHEAT BYPASS

			LOCATION					VALVE POSITION		CHECKOFF		Downstream	
VALVE NUMBER	DESCRIPTION	P&ID	Floor	Near	Area	Termintaion Point	CLASS	Normal	Test	Initials		Temp (F)	NOTES:
SGA-TRP-1	Superheat Bypass Drain Trap	M2063A	12	NW-boil	NW corner	Partial Byp Drn Cnd						F	
SGA-ACV-137	Superheat Bypass	M2063A	2	W-Cond	NW corner	C Condenser-West						F	

LOCATION: MISCELLANEOUS VALVES

			LOCATION					VALVE POSITION		CHECKOFF		Downstream	
VALVE NUMBER	DESCRIPTION	P&ID	Floor	Near	Area	Termintaion Point	CLASS	Normal	Test	Initials		Temp (F)	NOTES:
FWA-BV-299	Bootstrap Valve	M2035A	2	SW-boil	SW Htr 2							F	
FWC-ACV-28	DEA Recirc	M2037	2	W-Cond	NW corner	C Condenser-West						F	
TEC-ACV-152	1B BFPT Extraction Drain	M2075	2	W-Cond	NW corner	Cond-Basement						F	

LOCATION: VACUUM PUMPS

			LOCATION					VALVE POSITION		CHECKOFF		Downstream	
VALVE NUMBER	DESCRIPTION	P&ID	Floor	Near	Area	Termintaion Point	CLASS	Normal	Test	Initials		Temp (F)	NOTES:
HRB-P-1A	1A Vacuum Pump	M2021	2	SE-Boil	East Elevtr							F	
HRB-P-1B	1B Vacuum Pump	M2021	2	SE-Boil	East Elevtr							F	
HRB-P-1C	1C Vacuum Pump	M2021	2	SE-Boil	East Elevtr							F	
HRB-P-1D	1D Vacuum Pump	M2021	2	SE-Boil	East Elevtr							F	

LOCATION:

			LOCATION					VALVE POSITION		CHECKOFF		Downstream	
VALVE NUMBER	DESCRIPTION	P&ID	Floor	Near	Area	Termintaion Point	CLASS	Normal	Test	Initials		Temp (F)	NOTES:
TGA-ABV-2	Ventilator Valve	M2079	2	CV's	E A Cond	Atm - roof vents						F	
FWA-PS-70	BFP 1A Inlet Strainer DP	M2035A	2	N-Cond	BFPT Exh							F	
FWA-PS-71	BFP 1B Inlet Strainer DP	M2035A	2	N-Cond	BFPT Exh							F	
SGI-ABV-21	AH Soot Blower Drain	M2070	3	NE-Boil	Stairs	Cond						F	
SGI-ABV-22	AH Soot Blower Drain	M2070	3	NW-Boil	Stairs	Cond						F	
SGI-ABV-170	Boiler Soot Blower Drain	M2070	7	W-Boil		Cond						F	
SGI-ABV-171	Boiler Soot Blower Drain	M2070	7	E-Boil		Cond						F	
SGI-ABV-172	Boiler Soot Blower Drain	M2070	11	E-Boil	Backpass	Cond						F	
SGI-ABV-173	Boiler Soot Blower Drain	M2070	11	W-Boil	Backpass	Cond						F	
SGA-MBV-173	Economizer Recirc	M2063A	10.5	W-Boil	Backpass	Economizer inlet						F	
SGA-MBV-174	Economizer Recirc	M2063A	10.5	E-Boil	Backpass	Economizer inlet						F	

IP7016547

SGG-MCV-18	Main Steam Warming Line	M2069	2	E-CV'S		Cond						F	
SGG-MBV-25	Main Steam Line Drain	M2069	2	E-CV'S		Cond						F	
SGG-MBV-26	Main Steam Line Drain	M2069	2	E-CV'S		Cond						F	
SGG-MBV-55	Main Steam to BFPT Drain	M2069	2	E-CV'S		Cond						F	
SGG-MBV-56	Main Steam to BFPT Drain	M2069	2	E-CV'S		Cond						F	
PSA-ACV-60	Drum Aux Steam Supply	M2008	17	S-Boil		Aux						F	
PSA-ACV-57	SSH Aux Steam Supply	M2008	17	W-Boil		Aux						F	

IP7016548

IPP # 1

ISOLATION - CHECK LIST

BOILER Roof

6	MS Relief VALVES
1	Vent from Main Steam
4	HRH Relief valves
8	CRH Relief valves
6	Aux Stm Relief valves
1	HTR Relief valve header
1	DA Vent
5	Boiler Vent to Roof
2	Drum Vents to the Roof
8	Drum Relief valves

Blowdown Tank Vent (north side)

IP7016549

IPP # 1

ISOLATION - CHECK LIST

18th Floor - Top of Boiler

Vent from each Reheat line
Steam leakage near relief valves

Boiler Drum to Aux Steam (South) (Valve 1 & MBV2)

Superheat Steam to Aux Stm - (18th & 17th floor) (west)
Superheat Steam to Air Heater Soot Blowers (139, MBV 140)
Superheat Steam to Boiler Soot Blowers (141, MBV 142)
MS to Reheater Bypass (ACV 134, MUV 133)

Superheat Steam to Boiler Soot Blowers (143, MBV144) - east
Combustion gas Reheat Soot Blowers (17, MBV-24) - east

Contenuous Blowdown (MBV-4) - east
Chemical feed to drum
Drain from site glass to Blowdown header

Drain from drum pressure tap - west
2- Drains from site glass to Blowdown header

IPP #1
ISOLATION - Check LIST

13th - 17th Floors

17th Superheat Steam to Scrubber Soot blowing
(44, ACV 45, 46, 47, ACV 48, 49)

16th Feedwater to Scrubber soot blower desuperheater
(142, 137, 139 TT 246)

15th Pegging Steam to the DA
___ Aux Stm HDR Press
Boiler drains (west side) 37, 39, 41, 43, 45, 47, 49, 51
Boiler drains (east side) 53

14th DA startup Vents to ATM
___ # of ORIFICED Vents Open
AIR Preheat Return to DA VALVE 140
HP HTR Vent to DA
TRAP FROM AUX STM HDR

13th 3 - RECIRC'S FROM BOOSTER PUMPS
3 - RECIRC'S FROM BFP'S - also check relief valve (3) to floor
Aux Stm to DA Storage TK BV6, BV133
DA Level
MID - Roof : Relief valves from CRH to Aux Stm
Aux Steam to Steam Seals, Aux Stm to Plant Heating, Steam Seals

IPP #1

ISOLATION - Check List

8th - 12th floors

12th MS to Reheat Steam Bypass
(MBV 135, 125)

11th 4" Drain from DA to Bsmt sump (valve #23)
CRH pressure taps

10th Sample from Final Feedwater
Phosphate feed to Feedwater
Feedwater drain to economizer inlet drain header
Boiler drains (west side) 28, 30, 33, 35
Boiler drains (east side) 55, 57

9th CRH to Aux Steam HDR - DV&TT
Relief valve from final feedwater - before flow section
Aux Steam for plant heating - Status

8th TC station @ FFW
Trap from CRH to Aux Stm
FFW Ruska

IPP # 1

ISOLATION - CHECK LIST

4th - 7th Floors

7th RHT SPRAY VALVE STATION - ISOLATE
TB BLDG Roof Vents

6th 2 Relief valves from final feedwater to sump near HTR 8
HTR 8A & 8B Vents and Drains to sump
HTR 8A & 8B Vents to DA

5th Chem. CLEANING CONNECTION TO AUX. STM.
CONDENSATE FOR Aux. Stm. Desuper heating
CONDENSATE TO AND FROM BOILER Lighters
HTR 7A & 7B Vents and drains to sump
HTR 7A & 7B Vents to DA
HTR 4 Vents and drains to Sump / Relief valves
HTR 4 Vents to Condenser - startup vent top of HTR
HTR 3 Condensate Bypass MBV 17
HTR 4 Condensate Bypass MBV 18
Steam to Air HTR Soot Blowers
Aux steam to oil heater

4th Boiler drains (west side) MBV-29, 31, 34, MBV-36, 38
40, MBV-42, MBV-44, MBV-46, 48, MBV-50, MBV-52

BOILER DRAINS (east side) 54, MBV-56, MBV-58
Continuous Blowdown 5
Soot Blowing (Boiler) drain to condenser - MBV-
2 - Traps from Aux Stm HDR (east side)

IP7016553

IPP # 1

ISOLATION Check LIST

TB DECK

MS to BFPT(A) MBV-9
Drain to sump / Vents
Seal Injection pressure ____
Seal Return Temp. ____

MS to BFPT(B) MBV-10
Drain to sump / Vents
Seal Injection pressure ____
Seal Return Temp. ____

Feedwater Bypass around HTR's 6, 7, & 8
HTR 6A & 6B Vents and drains to sump
HTR 6A & 6B Vent to the DA
HTR 3 Vents to sump / Relief valve to sump
HTR 3 Vents to condenser - start up vent top of HTR

IP warming valve
Ventelator valve

Hood Sprays
Hood Spray press Reading

Computer Trailer

Control Room

IPP #1

Isolation Check List

Boiler - 3 floor to Bsmt

2ND FLOOR - SOUTH
Boiler Drains [62,61], [65, MBV66], [63,64], [67,68]

2ND FLOOR - WEST
Traps (2) from Aux Steam to Blowdown Tank

2ND FLOOR - EAST
BOILER DRAINS 170,69

2ND FLOOR - (NORTH - EAST)
Air HTR Soot Blowing drain to Condenser MBV-35

Bsmt

DA Drain to Air Preheat
Valve 24 - 1 floor above FGR pumps
valves 113, 114, 119, 122, 123 - Bsmt

APH Return to DA and Condenser.
ACV 134, 130, 131

Combustion gas Reheat to Condensate after HTR 2
150, 435 tell tale 436
~~FGR~~ FGR pump Recirc 110, 113, 114, 117
Pump leakage

2ND FLOOR West
Boiler drains.

IPP # 1

Isolation Check List

Scrubber Bldg.

- Soot Blower Condensate drain return to the Miscellaneous Drains receiver tank - Behind FGR Control Room valve # 127 & 125

IPP # 1

ISOLATION Check LIST

MEZZ

4- Overflow lines from VAC. Pump Separator tank to Misc drain tank
2- Relief valves from Feedwater to HTR 6A & 6B

HTR 2 Vents and drains to sump, Relief valve to sump
HTR 2 Vents to Condenser - startup vent top of HTR shell
HTR 2 Condensate Bypass MBV-16
Boot Strap from Condensate to Feedwater DV & TT
Relief valve from BFP(B") to sump.
EXTR Line Drain from LP steam to BFPT "B"
Warm-up drain from Feedwater to Condenser
Relief valve from BFP(A) to sump
Aux Steam to BFPT DV & TT
CRH to Steam Seals
Aux Steam to Steam Seals
TDV to Condenser

MS to Steam Seal 10, MBV-2, MBV-3
Steam Seal header Relief valves
HPLO steam to Steam Seal header.
2500 # Ruska

MS drains to Blowdown tank MBV-11/12/13/14
MS drains to Condenser MBV 55/56/25/26
4 Control valve ~~before~~ before seat drains
4 Stop valve before seat drains
Main Steam Bypass to Condenser DV & TT
Condensate for desuperheating ACV 59, ACV89, ACV86
Drains from Rotor cooling line to CRH line
CIV drain to Condenser
CIV drain to sump - mezz near condensate for HRH drains ~~drain~~
mezz ~~near~~ BFPT A exhaust to Condenser

IPP #1

ISOLATION - Check List

Mezz - Cont.

Normal make-up to Condenser (DV & TT) 31, 30 telltale 148
Condensate for desuperheating the steam to the SPE

* Condenser DWG - TB END
* CONDENSER DWG - South side
  HTR #1A, 1B, 1C Vent & drain to sump
  Start up Vent to the Condenser

HTR #1 & DC Condensate Bypass

* CONDENSER DWG - GEN END
  DA Drain to the Condenser 85, 86, 26, 27
  HTR #4 Hi Level dump to the Condenser
  Boiler Bypass to Condenser 136, 138, 169, 170
  Condensate to and from lighters for boiler

* Condenser DWG - North side
  3-Vacuum Breakers - Find out how to check for make-up leaking into the condenser.
  BFPT "B" Drains to the Condenser
  BFPT "A" Drains to the Condenser.

11/

IPP #1

ISOLATION Check List

BSMT

TB Meter Bypass 1½" TB meter
TB meter Bypass 2" TB meter
Booster pumps drain to sump
Drain to sump from the seal return tank under the BSMT floor - also any tank leaks

Make-up from Feedwater to Aux Boiler
- also valve unit #2
valve @ Aux boiler

Standby pump drain to sump
Relief on Suction to standby pump
HP HTR drain pump drains to sump

Make-up to Condensate Polishers
Drains to Sump from Polishers
Condensate pump leak to sump
Make-up to Condensate pump seals DV & TT
Cycle make-up to drain cooler line to the Condenser
Valve 129 (above drain Cooler) Valve 66 (above walkway)
Drain Cooler vents and drains
Condensate Recirc ACV 25
Condensate to Storage Tank 19, 20, 23, 24
Air Preheat Return to the Condenser 137, 139, 141
* CONDENSER DWG - GEN END
HTR #3 Hi Level drain to Condenser
HTR #2 Hi Level drain to the Condenser
HTR #1 & #2 Hi Level drain to the Condenser
Generation Bldg Heating Return to Condenser
H_2 Pressure _____
H_2 Purity _____

IP7016559

IPP #1

ISOLATION - Check List

Bsmt - Cont.

* CONDENSER DWG - South side
  Hotwell Level
  Emergency Make-up (DV & TT) 33, 34 TT 175

Misc Drain tank to Sump
Trap from Aux Steam HDR
HRH drain to Condenser
CRH drain to Condenser
TDV drain to Condenser
MS line Bypass to Condenser

* Condenser DWG - TB END
  HTR 6A & 6B Hi level dumps to Condenser
  HTR 7A & 7B Hi level dumps to Condenser
  HTR 8A & 8B Hi level dumps to Condenser
  SV & CV above seat drains
  Equalizer Valve
  Stm lead drains
  CIV drains
* HP Drain Header
  SPE DRAIN FLOW
* Condenser DWG - North side
* { LP drain Header to A hood
  { 2 LP drain Headers to Condenser under C hood

Samples

Chem. Feed

Sumps

LP DRAIN HDR (NORTH-WEST CORNER)

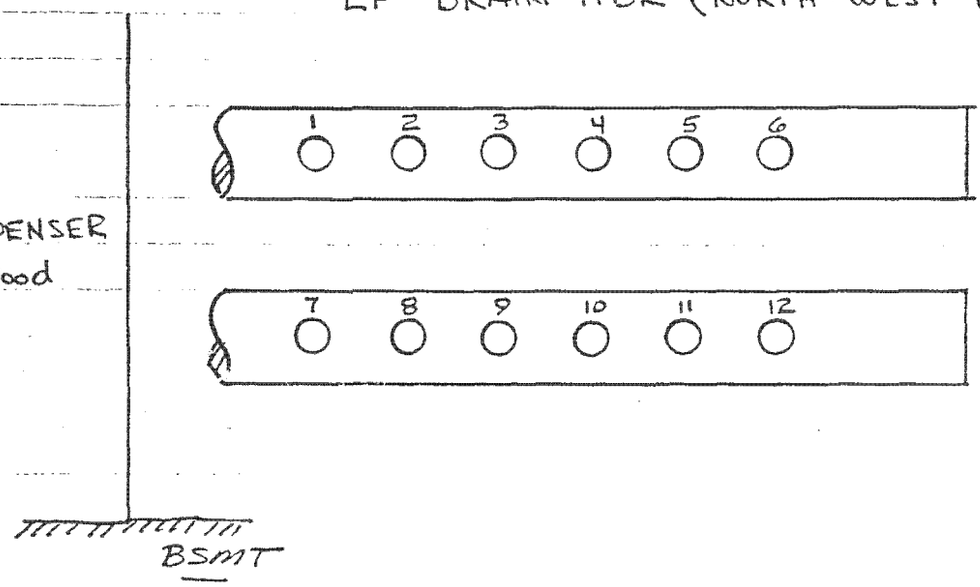

ELEVATION VIEW
(LOOKING WEST)

1)	EXTR	TO	HTR	2	FROM	hood	"C"	-	Drain	after	non-return	valv.
2)	"	"	"	"	"	"	"	-	"	before	"	"
3)	"	"	HTR	3	"	"	"	-	"	after	"	"
4)	"	"	"	"	"	"	"	-	"	before	"	"
5)	"	"	HTR	4	"	"	"	-	"	after	"	"
6)	"	"	"	"	"	"	"	-	"	before	"	"
7)	"	"	HTR	2	"	hood	"B"	-	"	after	"	"
8)	"	"	"	"	"	"	"	-	"	before	"	"
9)	"	"	HTR	3	"	"	"	-	"	after	"	"
10)	"	"	"	"	"	"	"	-	"	before	"	"
11)	"	"	HTR	4	"	"	"	-	"	after	"	"
12)	"	"	"	"	"	"	"	-	"	before	"	"

* ALSO CHECK TRAPS AND DRAIN TO SUMP

IP7016561

LP DRAIN HDR (NORTH-EAST CORNER)

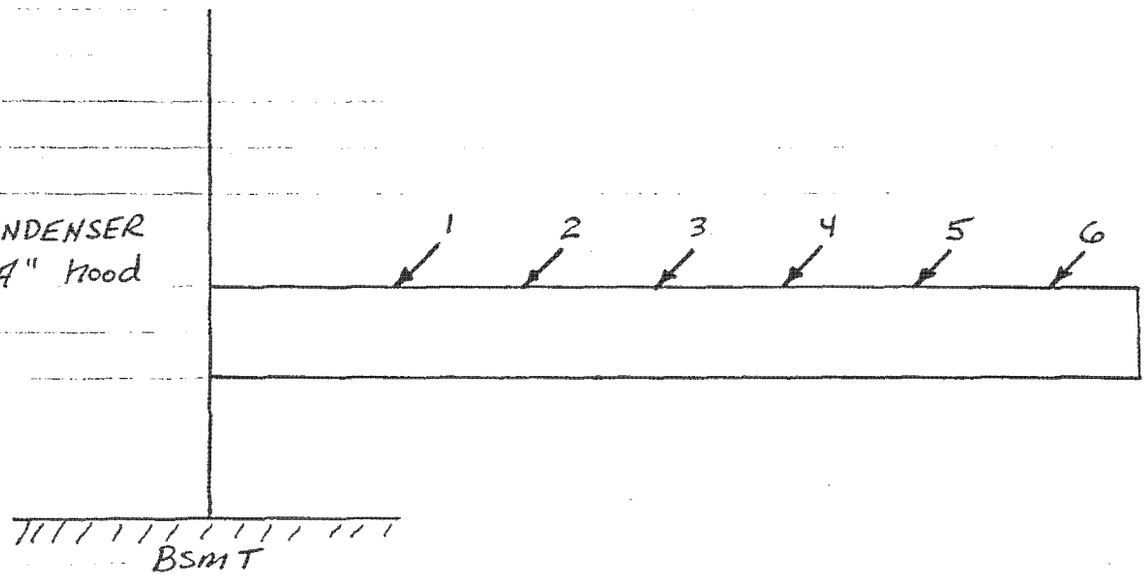

ELEVATION VIEW
(LOOKING WEST)

1) EXTR TO HTR #2 FROM "A" hood - Drain after non-return valve
2) " " " " " " " " before " " "
3) " " HTR #3 " " " " after " " "
4) " " " " " " " " before " " "
5) " " HTR #4 " " " " after " " "
6) " " " " " " " " before " " "

* ALSO CHECK TRAPS AND DRAINS TO SUMP

IP7016562

HP DRAIN HDR
(EAST SIDE - BSMT LEVEL)

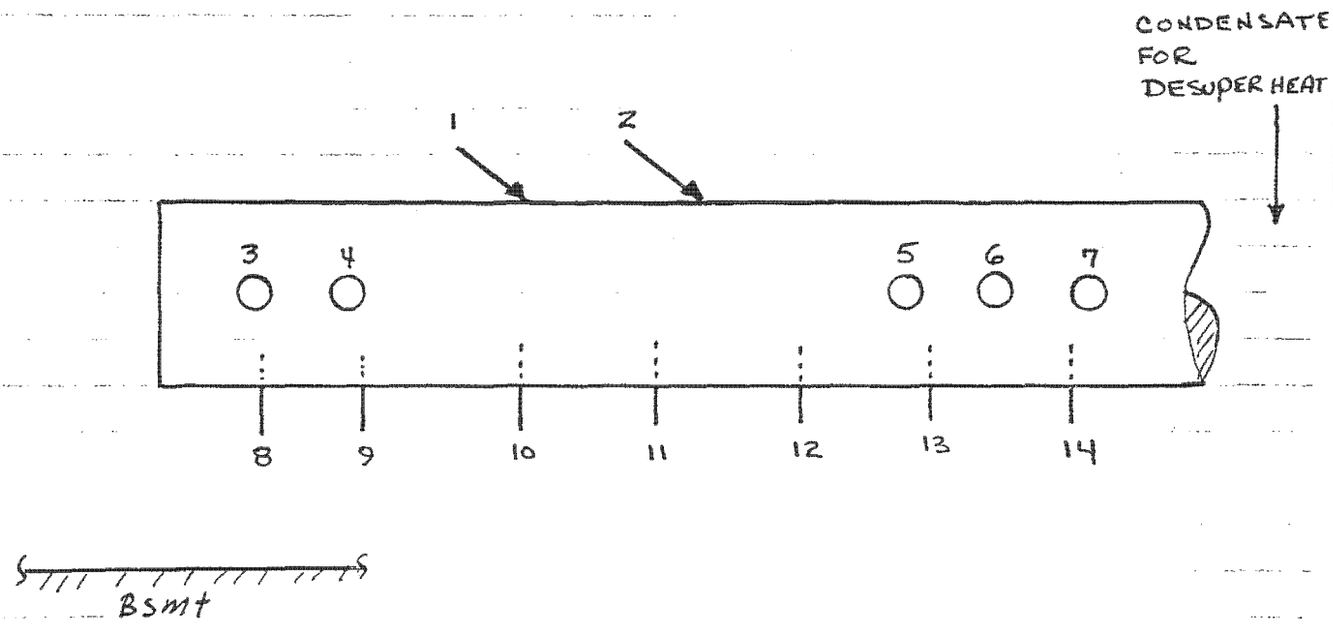

ELEVATION VIEW
(LOOKING SOUTH)

1)	Drain	from	A.P.H	soot	blowers			
2)	Drain	from	boiler	soot	blowers			
3)	Drain	from	4th	Stg	Extr	to	HTR 8A & 8B	(before seat)
4)	"	"	"	"	"	"	HTR 8A	(after seat)
5)	"	"	14	stg	"	"	BFPT 1B	(after MBV-9)
6)	"	"	"	"	"	"	DA	(after seat)
7)	"	"	"	"	"	"	"	" "
8)	"	"	4th	stg	"	"	HTR 8B	" "
9)	"	"	11th	stg	"	"	HTR 6A & 6B	(before seat)
10)	"	"	"	"	"	"	HTR 6A	(after seat)
11)	"	"	"	"	"	"	HTR 6B	" "
12)	"	"	14	stg	"	"	BFPT 1A	(after BV-9)
13)	"	"	"	"	"	"	BFPT 1A & 1B	
14)	"	"	"	"	"	"	DA	(before seat)

* ALSO CHECK TRAPS AND DRAINS TO SUMP

IP7016563

CONDENSER CONNECTIONS MEZZ - TB END

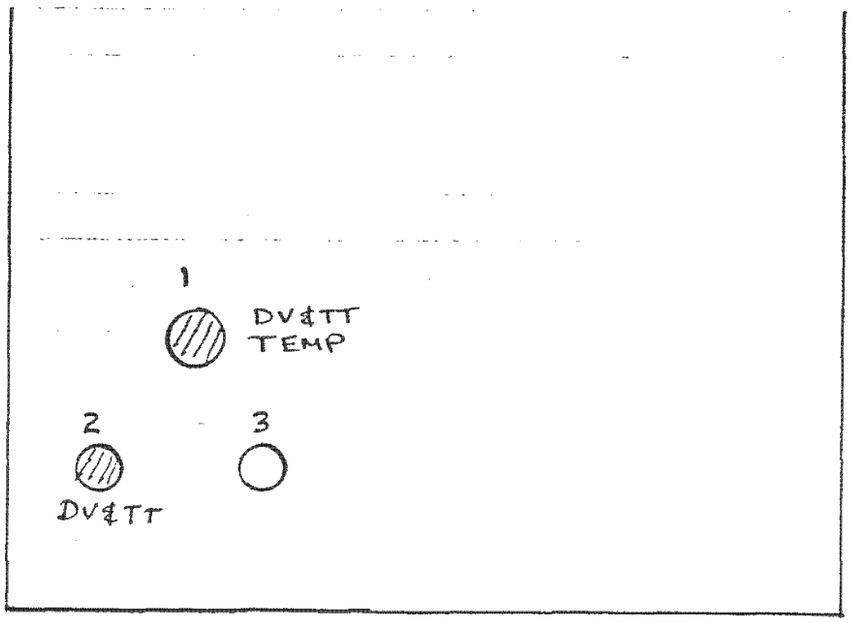

CONDENSER (MEZZ LEVEL)
(TB-END)

1) MS Bypass to Condenser and MS drains to Bypass line - Check temp before desuperheater

2) Normal Hotwell make-up

3) Drain from Misc drain tank

CONDENSER CONNECTIONS MEZZ - SOUTH

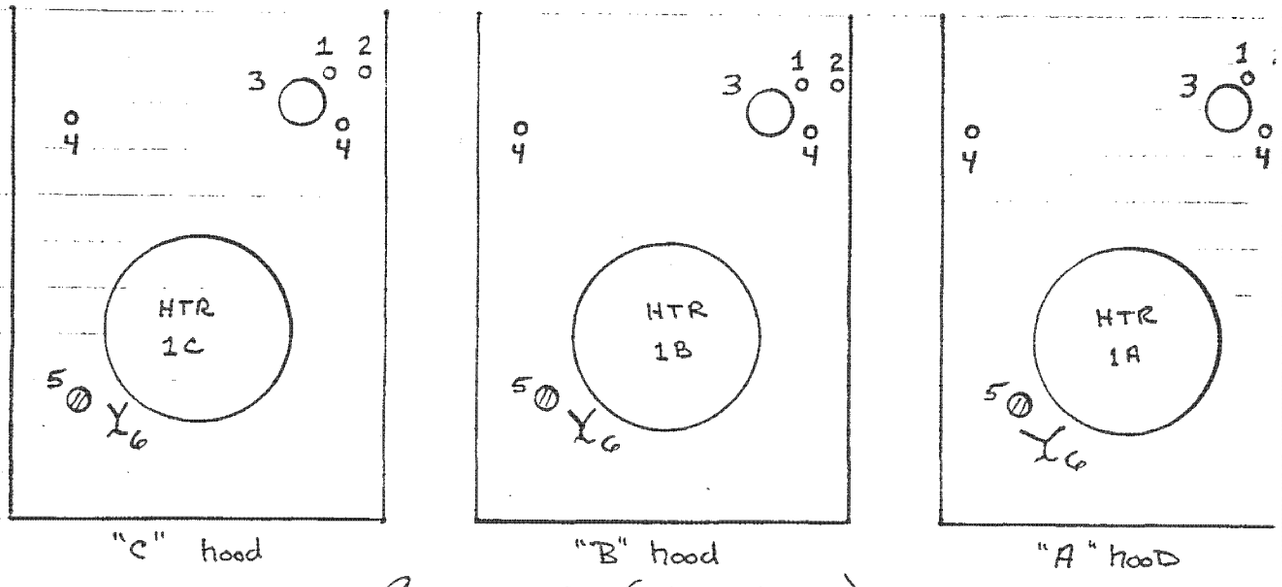

CONDENSER (MEZZ LEVEL)
(SOUTH SIDE)

1) TE
2) Pressure Tap
3) LP Steam Seals to SPE
4) Waste water & oil from turbine
5) HTR # 1 Vent to Condenser
6) HTR # 1 drains to sump.

IP7016565

CONDENSER CONNECTIONS MEZZ – GEN. END

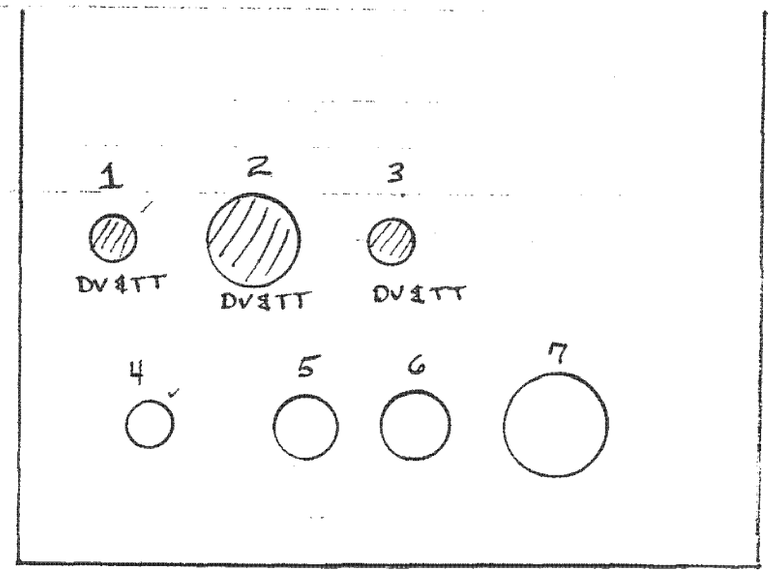

Condenser (Mezz Level)
(GEN END)

1) DA drain to Condenser DV&TT BV26, BV27
   DA drain to Condenser DV&TT BV85, BV86
   Condensate return from lighters BV 375
2) Bypass from boiler to Condenser BV 136, ACV 137, BV 138, BV 169, BV 170
3) HTR 4 Hi level drain to Condenser BV 9, BV 17
4) Booster pump and standby pump seal return
5) Condensate pump startup recirc valve to Condenser
6) Condensate recirc to Condenser
7) Drain Cooler drain to Condenser

IP7016566

CONDENSER CONNECTIONS MEZZ - NORTH SIDE

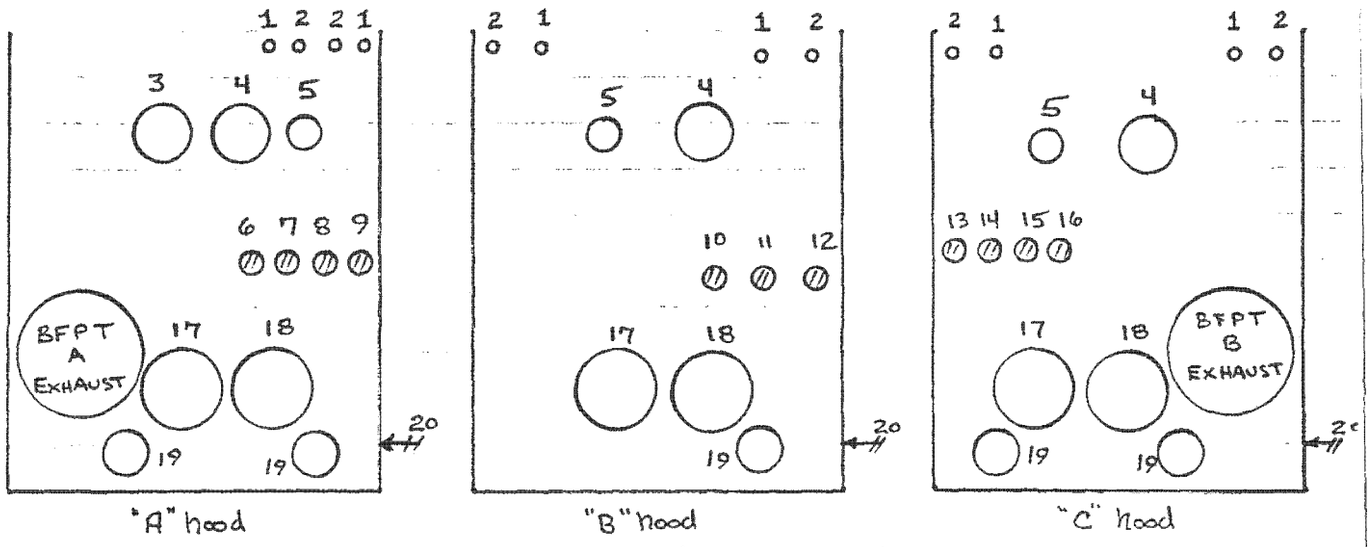

CONDENSER (MEZZ LEVEL)
(NORTH SIDE)

1) TE
2) Pressure Tap
3) TDV to HTR 1A
4) EXTR TO HTR #4
5) SSH to LP Seals
6) BFPT "A" HP STOP VALVE DRAIN
7) BFPT "A" LP STOP VALVE BELOW SEAT DRAIN
8) BFPT "A" HP STOP VALVE DRAIN
9) BFPT "A" FIRST Stage Drain
10) HTR #4 Vent to Condenser
11) HTR #3 Vent to Condenser
12) HTR #2 Vent to Condenser
13) BFPT "B" FIRST STAGE DRAIN
14) BFPT "B" HP STOP VALVE DRAIN
15) BFPT "B" LP STOP VALVE below SEAT DRAIN
16) BFPT "B" HP STOP VALVE DRAIN
17) EXTR TO HTR #2

CONT.
(18) EXTR TO HTR #3
(19) TO VACUUM PUMPS
(20) VAC. Breaker - Check for MAKE-UP LEAKAGE TO CONDENSER

IP7016567

CONDENSER CONNECTIONS

Bsmt - TB END

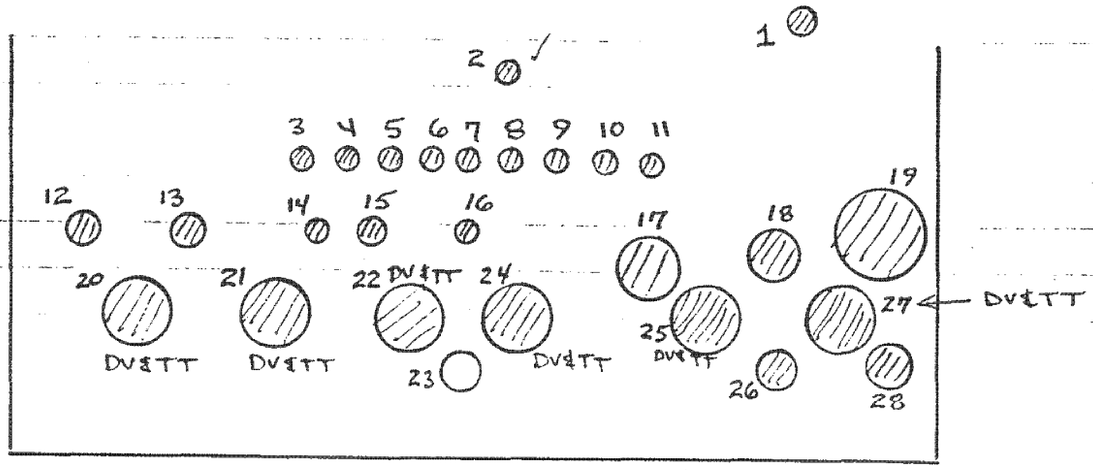

CONDENSER - Bsmt
(TB END)

1) Orificed drain from TDV to HTR
2) Drain from Feedwater to HTR #6
3) Drain RHT Bowl to condenser
4) Control valve drain to condenser
5) " " " " "
6) " " " " "
7-10) STOP valve drain to condenser
11) Drain from RHT Bowl
12) CRH low point drains - check before desuperheating
13) HRH low point drains - check before desuperheating
14) Low point drain from MS Bypass to condenser
15) Control valve drain to condenser
16) Main Steam lead drain to condenser
17) TDV to condenser
18) Equalizer valve
19) HP extn line drain header
20, 21) HTR 6A & 6B Hi level dumps — 20) HTR 6A ; 21) HTR 6B
22, 24) HTR 8A & 8B Hi level dumps — 22) HTR 8A ; 24) HTR 8B
23) Drain from Misc Drain Tank
25, 27) HTR 7A & 7B Hi level dump — 25) HTR 7B ; 27) HTR 7A
26) SSH low point drain
28) Drain from LP extn steam to BFPT "A"

IP7016568

CONDENSER CONNECTIONS BSMT - SOUTH SIDE

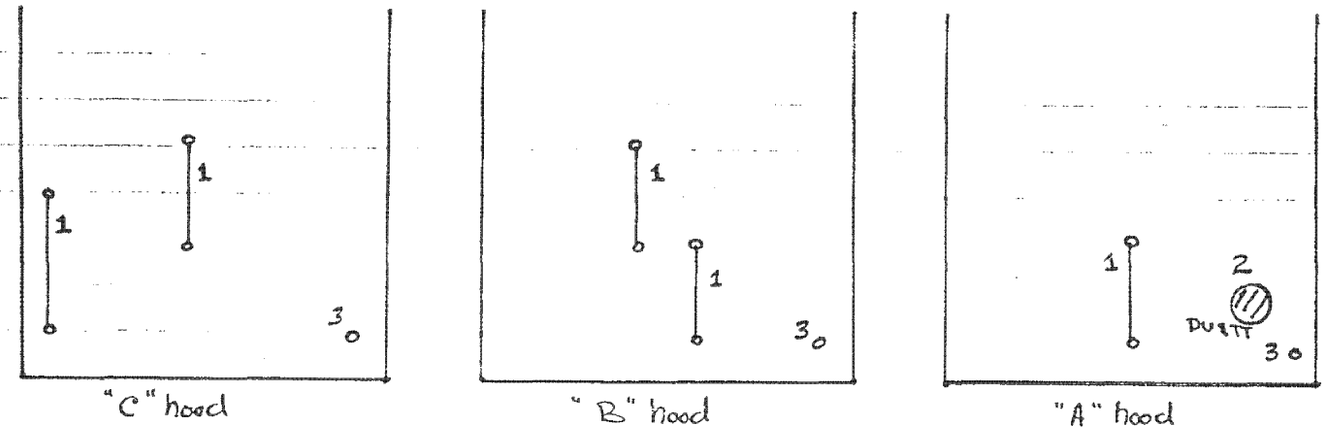

CONDENSER - BSMT
SOUTH SIDE

1) SITE GLASS OR LEVEL INDICATOR
2) EMERGENCY MAKE-UP TO HOTWELL
3) TE

IP7016569

CONDENSER CONNECTIONS BSMT - GEN END

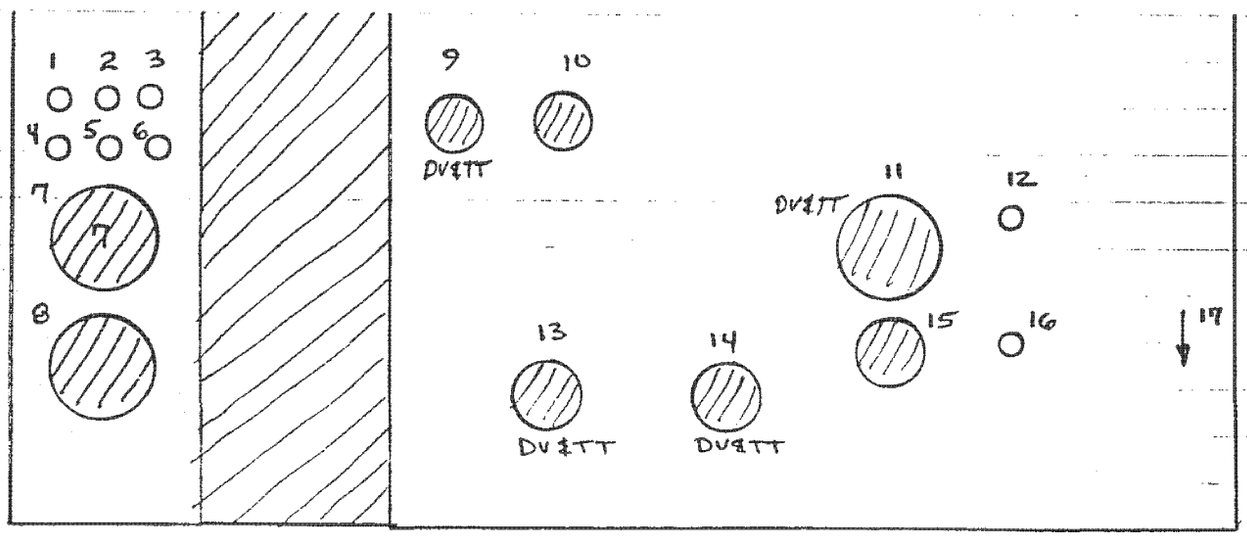

CONDENSER BSMT
GEN END

1,2,3) Condensate pump suction vents
4,5,6) Condensate pump disch vents
7) LP HTR EXTR LINE HDR
8) LP HTR EXTR LINE HDR
9) APH Return to Condenser
10) Extr line drain from LP steam to BFPT "B"
11) Flash tank Hi level drain to the Condenser
12) Vent to Condenser from the drain cooler drain line to Condenser
13) HTR #3 Hi level drain to Condenser
14) HTR #2 Hi level drain to condenser
15) Generation Bldg Heating return to condenser
16) Sample from drain cooler drain line to condenser
17) Local sample from drain cooler.

IP7016570

CONDENSER CONNECTIONS

BSMT - NORTH SIDE

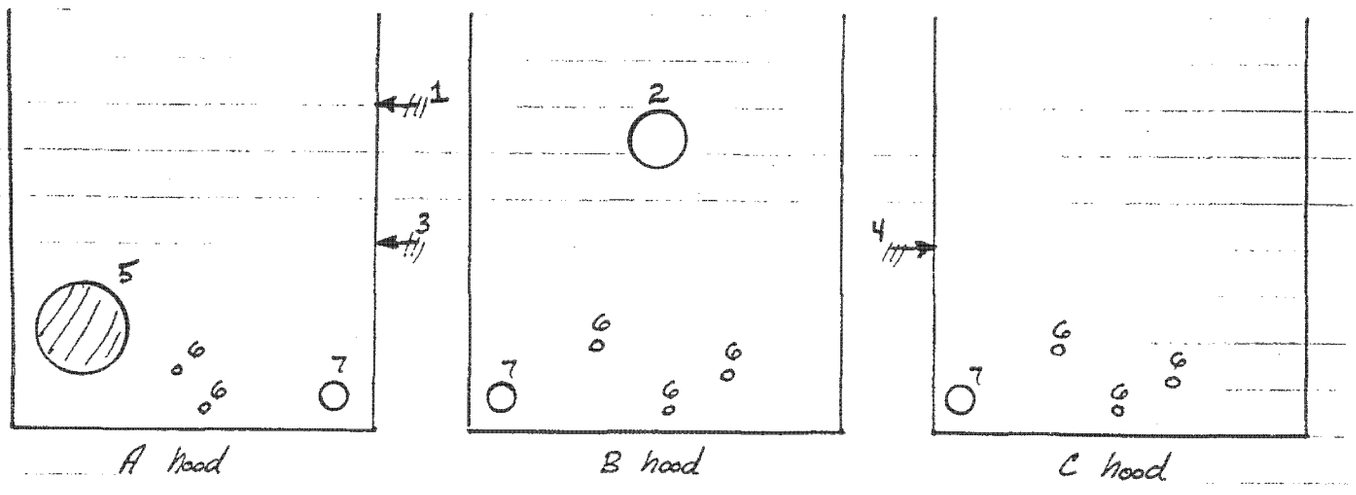

Condenser Bsmt
North Side

1) SSH Low point drain - check MEZZ Level
2) To VACUUM Pumps
3) BFPT "1A" LP STOP VALVE above seat drain - check Mezz level
4) BFPT "1B" LP " " " " " " " "
5) LP extraction line drain header
6) Hotwell sample
7) Hotwell drain.

IP7016571

TEST # _____ DATE _____

TURBINE PERFORMANCE TESTING - CRITICAL VALVES

I - HIGHEST PRIORITY, IMMEDIATELY AFTER TRIP
II - RETURN TO SERVICE AFTER PRIOR. #1
} RESTORE BETWEEN TESTS
III - " " " " END OF DAY OR TRIP

PRIORITY I VALVES (PAGE 1 OF 2)

P&ID	VALVE #	DESCRIPTION	LOCATION	VLV POSITION / CLOSE INIT.	OPEN O INITIAL	CLOSE C INITIAL	OPEN O INITIAL
M2076	2TED-BV-0019	HP HTR 8A ALT. HLVL DUMP	GF - EAST OF COND				
"	" 0020	" 8A "	"				
"	" 0027	" 7A "	"				
"	" 0028	" 7A "	"				
"	" 0035	" 6A "	"				
"	" 0036	" 6A "	"				
"	" 0021	" 8B "	"				
"	" 0022	" 8B "	"				
"	" 0029	" 7B "	"				
"	" 0030	" 7B "	"				
"	" 0037	" 6B "	"				
"	" 0038	" 6B "	"				
M2020	2HRA-BV-0019	COND. NORMAL DRAWOFF	GF SW CORNER OF COND				
"	-0020	"	"				
M2077	2TEE-BV-0011	LP HTR 3 ALT. HLVL DUMP	GF - WEST OF COND				
"	" 0019	" 3 "	"				
"	" 0013	" 2 "	"				
"	" 0021	" 2 "	"				
"	" 0015	FLASH TANK "	GF - SW OF COND				
"	" 0022	" "	"				

IP7016572

TEST # _____ DATE _____

PRIORITY I VALVES (PAGE 2 of 2)

P&ID	VALVE #	DESCRIPTION	LOCATION	VLV POSITION / CLOSE INITIALS	OPEN O TIMINGS	CLOSE C INITIALS	OPE C INITIA
M2077	2TEE-BV-0009	LP HTR 4 ALT HLVL DUMP	MEZZ WEST OF COND				
"	" 0017	"	"				
M2037	2FWC-BV-0026	DA RECIRC. to COND.	"				
"	" 0027	"	"				
"	2FWC-MBV-90	"	"				
M2020	2HRA-BV-0030	COND. NORMAL MU	MEZZ SW CORNER OF COND.				
"	2HRA-ACV-32 " 0031	" "	"				
M2080A	2TGC-BV-0010	MN. STM. to turbine seals	MEZZ W. OF MN. STM HDR				
M2069	2SGG-MBV-9	HP STM. to BFPT 1A	3rd NE OF BFPT 1A				
"	" -10	" 1B	3rd SW OF BFPT 1B				
M2008	2PSA-BV-0021	DA PEGGING STEAM	15th N of E ELEVATOR				
"	" 0022	"	"				
2035A	2FWA-BV-37	BFPT 1A Recirc	13th EAST				
M2075	2TEC-BV-0073	HP HTRS 8A & 8B EXTRACT.	GF E OF LUBE OIL CONT.				
"	" 0079	HP HTR 8A "	"				
M2035C	2FWA-BV-0388	HP STOP VLV 1B1 STEM LEAKOFF	MEZZ NW OF COND				
"	" 0390	" Seat DRAIN	"				
"	" 0391	" 1A1 " "	MEZZ N OF COND				
M2075	2TEC-BV-0075	HP HTRS 8A & 8B EXTRACT	GF E OF LUBE OIL CENTRIFUGE				
"	" 0081	HP HTR 8A "	"				
"	" 0105	HP HTR 6B "	"				
"	" 0121	BFPT 1A & 1B "	"				

IP7016573

TEST # _____ DATE _____

PRIORITY II VALVES (PAGE 1 OF 3)

TID	VALVE #	DESCRIPTION	LOCATION	VLV POSITION / CLOSE INITIALS	OPEN O INITIALS	CLOSE C INITIALS	OPE C INITI
M2054A	2SAC-BV-0017	SAMPLE 1 MU to COND.	GF Chem LAB				
"	" 0030	"	"				
"	" 0019	SAMPLE 3 DEMIN. 1A OUTLET	"				
"	" 0032	"	"				
"	" 0020	SAMPLE 4 DEMIN. 1B OUTLET	"				
"	" 0033	"	"				
"	" 0021	SAMPLE 5 DEMIN. 1C OUTLET	"				
"	" 0034	"	"				
"	" 0022	SAMPLE 6 DEMIN 1D OUTLET	"				
"	" 0035	"	"				
"	" 0023	SAMPLE 7 COND. POL. OUTLET	"				
"	" 0036	"	"				
"	" 0001	SAMPLE 8 COND. AFTER ~~COND~~ GLAND COND	"				
"	" 0002	SAMPLE 9 DA INLET	"				
"	" 0024	"	"				
"	" 0037	"	"				
"	" 0026	SAMPLE 11 ECON. INLET	"				
"	" 0039	"	"				
"	" 0003	SAMPLE 13 SAT. STEAM	"				
"	" 0004	SAMPLE 14 MN. STEAM	"				
"	" 0028	"	"				
"	" 0041	"	"				
M2075	2TEC-BV-0065	LP HTR 4 LP TURBIN ~~SECT.~~ 1C	GF NW CORNER COND CEILING				
M2071	2SGJ-BV-0056	COLD RH STM TRP 1 INLET	GF 204-B				
"	" 0057	" OUTLET	"				
M2069	2SGG-BV-0015	MN. STM. SAMPLE 14	TOP OF MEZZ MN STM				
"	" 0016	"	"				

IP7016574

TEST # _____ DATE _____

PRIORITY II VALVES (PAGE 2 OF 3)

P&ID	VALVE #	DESCRIPTION	LOCATION	RV POSITION / CLOSE INITIALS	OPEN O INITIALS	CLOSE C INITIALS	OPEN O INITIALS
M2021	2HRB-BV-0109	SEPARATOR 1D Mu	MEZZ. CONDENSER VAC. PMPS				
"	" 0110	" 1C "	"				
"	" 0111	" 1B "	"				
"	" 0112	" 1A "	"				
M2071	2SGJ-BV-0090	COND to CRH DSPRHTR 2	MEZZ 3rd by GE Trailer				
M2079	2TGA-BV-0005	HOOD SPRAY SUPPLY					
M2078B	2TEF-BV-0163	LP HTR 3 CONTINUOUS vent to COND	3rd LP HTR 3				
M2078A	2TEF-BV-0077	HP HTR 6A CONTINUOUS vent to DEA	3rd HP HTR 6A				
"	" 0080	" 6B "	3rd HP HTR 6B				
"	" 0076	" 7A "	5th HP HTR 7A				
"	" 0079	" 7B "	5th HP HTR 7B				
M2078B	" 0162	LP HTR 4 " to COND	5th LP HTR 4				
M2078A	" 0075	HP HTR 8A " to DEA	6th HP HTR 8A				
"	" 0078	" 8B "	6th HP HTR 8B				
M2035B	2FWA-BV-0202	Boiler Feed Sample 11	10th S OF MCC 2B09				
"	" 0203	"	"				
M2078A	2TEF-BV-0003	DEA CONTINUOUS VNT TO ATMOS.	14th top OF DEA				
"	" 0007	"	"				
"	" 0011	"	"				
M2063B	2SGA-BV-0199	STM. TRAP 3	18th				
M2063B	2SGA-BV-0172	STM. GEN. SAMPLE 13	17th S				
"	" 0003	CONTINUOUS BLOWDOWN	18th E END OF DRUM				
"	" MBV-4	"	"				
"	" MBV-2	STM SUPPLY to AUX STM	18th S OF DRUM				
"	" BV-0001	"	"				
M2008	2PSA-MBV-17	CRH SUPPLY to AUX STM	9th Behind E ELEVATOR				
"	" BV-12	"	"				
"	" BV-14	"	"				
"	" BV-58	2ND SUPERHEAT to AUX STM	17th W. SIDE				
M2063A	2SGA-BV-0195	STEAM TRAP 2	"				
M2063A	2SGA-BV-0010	MN STM to AUX STM	"				

IP7016575

TEST #_____ DATE_____

P&ID	VALVE #	DESCRIPTION		LOCATION	PRIORITY	CLOSED C INITIAL	OP C INI
M2075	2TEC-BV-0027	LP HTR 2	LP TURB. SECTION 1B	GF - NW	III		
"	" 0031	"		CORNER	III		
"	" 0035	LP HTR 3		OF	III		
"	" 0039	"		COND. -	III		
"	" 0043	LP HTR 4		Bottom	III		
"	" 0047	"		Row	III		
"	" 0003	LP HTR 2	LP TURB. SECTION 1A	GF - NE	III		
"	" 0007	"		CORNER	III		
"	" 0011	LP HTR 3		OF	III		
"	" 0015	"		COND.	III		
"	" 0019	LP HTR 4			III		
"	" 0023	"			III		
"	" 0051	LP HTR 2	LP TURB. SECTION 1C	GF- NW	III		
"	" 0055	"		CORNER	III		
"	" 0059	LP HTR 3		OF	III		
"	" 0063	"		COND.	III		
"	" 0067	LP HTR 4		TOP	III		
"	" 0071	"		Row	III		
M2038 B	2FWD-BV-0121	COND. POLISH Regen Pmp		GF	III		
"	" 0125	"		"	III		
M2008	2PSA-BV-0082	AUX. STM. TRAP 5		"	III		
M2080A	2TGC-BV-0058	AUX. STM. to COND. RH		MEZZ. TOP OF VLV DECK	III		
M2069	2SGG-BV-0058	MN. STM. WARMING LINE		MEZZ. NE OF MOC 2A03	III		
M2068	2SGF-BV-0065	DOWNCOMER DRN. BLOWDOWN		MEZZ. S. SIDE BOILER	III		
"	" 0055	LWR. CONVECTION PASS HDR		10th east	III		
"	" 0057	"		"	III		
"	" 0035	"		10th west	III		
"	" 0028	"		"	III		

IP7016576

TEST # _____ DATE _____

ID	VALVE #	DESCRIPTION	LOCATION	PRIORITY	CLOSE C INITIAL	OPE C INI
M2068	2SGF-BV-0041	SECOND. SPRHTR OUT HDR.	15th - West	III		
"	" 0043	" " INTERMED HDR	"	III		
"	" 0045	" " " "	"	III		
"	" 0049	" " PLATEN "	"	III		
"	" 0051	ROOF INLET HDR	"	III		
M2008	2PSA-BV-0026	TURBINE Seals S/A STM	MEZZ 203-D	III		

IP7016577

ASME TURBINE PERFORMANCE TESTING UNIT #2 Test # _____

Cycle Isolation Check off Sheets

Before Test-Isolation: Start _____ End _____ Name _____

After Test-Isolation: Start _____ End _____ Date: _____

SYSTEM: BOILER FEED P+ID # 2 FWA-M2035C

Valve #	Description	Location	Class	Position Normal	Position Test	Position - Before Test As Found	As left	Initials	Position - After Test As Found	As Left	Initials	Comments
ABV-303	ABOVE SEAT DRAIN, HP STOP VALVE (BFPT 1A)	1A BFPT N. SIDE	N	C	C	C		RW				check in control Room
ABV-305	BELOW SEAT DRAIN HP STOP VALVE	"	N	C	C	C		RW				↓
ABV-307	ABOVE SEAT DRAIN LP STOP VALVE	" S. SIDE	N	C	C	C		RW				
ABV-309	BELOW SEAT DRAIN LP STOP VALVE	"	N	C	C	C		RW				
ABV-311	1ST STAGE DRAIN	"	N	C	C	C		RW				
ABV-304	ABOVE SEAT DRAIN HP STOP VALVE	1B BFPT S. SIDE	N	C	C	C		RW				
ABV-306	BELOW SEAT DRAIN HP STOP VALVE	"	N	C	C	C		RW				
ABV-308	ABOVE SEAT DRAIN LP STOP VALVE	" N. SIDE	N	C	C	C		RW				
ABV-310	BELOW SEAT DRAIN LP STOP VALVE	"	N	C	C	C		RW				
ABV-312	1ST STAGE DRAIN	"	N	C	C	C		RW				

IP7016578

ASME TURBINE PERFORMANCE TESTING UNIT #2 Test # ____

Cycle Isolation Check off Sheets

Before Test-Isolation: Start _____ End _____ Name _____

After Test-Isolation: Start _____ End _____ Date: _____

SYSTEM: CONDENSATE P&ID# 2FWC-M2037

Valve #	Description	Location	Class	Position Normal	Position Test	Position - Before Test As Found	As left	Initials	Position - After Test As Found	As Left	Initials	Comments
BV-26	DA Recirc to Cond	Mezz - West Side Condenser	~~CR~~	~~O~~	~~C~~							
BV-27	" " " "	"	~~CR~~	~~O~~	~~C~~							
MBV-90	" " " "	"	~~CR~~	~~C~~	~~C~~							
BV-85	" " " "	"	~~N~~	~~O~~	~~C~~							
BV-86	" " " "	"	~~N~~	~~O~~	~~C~~							
(BV-105)	-telltale	"	N	C	C	C		RW				
(BV-110	-telltale	"	N	C	C	C		RW				
BV-24	APH CNDS Supply	Mezz above CGR pumps	~~N~~	~~O~~	~~C~~	C		RW				
BV-23	DA tank Belly Drn	11th floor	N	C	C	C		RW				
MBV-9	CNDS Bypass Htr 1	Mezz floor SW turb-next to stair	N	C	C	C		RW				
MBV-16	CNDS Bypass Htr 2	Mezz floor SW of manelev	N	C	C	C		RW				
MBV-17	CNDS Bypass Htr 3	5th floor SW Boiler	N	C	C	C		RW				
MBV-18	CNDS Bypass Htr 4	" "	N	C	C	C		RW				

IP7016579

ASME TURBINE PERFORMANCE TESTING UNIT #2 Test # _ _

Cycle Isolation Check off Sheets

Before Test-Isolation: Start _____ End _____ Name _____

After Test-Isolation: Start _____ End _____ Date: _____

SYSTEM: AUX. STEAM P&ID # 9PSA-M2008

REV. 2

Valve #	Description	Location	Class	Position Normal	Position Test	Position - Before Test As Found	As left	Initials	Position - After Test As Found	As Left	Initials	Comments
BV-16	Make-up from 112 D.A.	Bsmt. near BBFP 2C	N		C	C	C	GK				–
~~BV-20~~	~~Make-up from 11/12 D.A~~	~~Aux. Boiler~~	~~N~~		~~C~~							
~~BV-22~~	~~Make-up from 11/12 D.A~~	~~Aux Boiler~~	~~N~~	~~C~~	~~C~~							
BV-18	Make-up from 111 D.A	Unit 1 Bsmt BBFP 2C	N		C	C	C	GK				–
BV-83	STEAM TRAP #5	BSMT. N.E. CORNER OF TURB. PEDISTAL	N	C	C	C	C	GK				–
BV-82	"	"	~~CR~~	~~C~~	~~C~~							

IP7016580

INITIAL TURBINE PERFORMANCE TESTING UNIT "2 Test # _ ___

Cycle Isolation Check off Sheets

Name _____

Before Test-Isolation: Start _____ End _____

After Test-Isolation: Start _____ End _____

Date: _____

SYSTEM: TURBINE SEALS & DRAINS P+ID# 2TGC-M2080A

Valve #	Description	Location	Class	Position Normal	Position Test	Position - Before Test As Found	As left	Initials	Position - After Test As Found	As Left	Initials	Comments
BV-58	aux. STEAM TO COLD REHEAT	MEZZ. top of VALVE DECK	~~CR~~	~~O~~	~~C~~							
BV-10	MAIN STEAM TO TURBINE Seals & DRNS	MEZZ. MN STEAM	~~CR~~	O	C							
MBV-16	aux. STEAM to COLD REHEAT	MEZZ. top of VALVE DECK	N	C	C	C	C	SK				
ACV-5	aux. STEAM to STEAM SEAL HDR	"	N	C	C	C	C	SK				
MBV-6	"	"	N	C	C	C	C	SK				
ACV-17	HP TURBINE LEAKOFF TO STEAM SEAL HDR	"	~~N~~	~~O~~	~~C~~	? C	C	SK				
ACV-1	MAIN STEAM TO STEAM SEAL HDR	"	~~N~~	~~O~~	~~C~~							
MBV-2	"	"	~~N~~	~~O~~	~~C~~							
MBV-3	"	"	~~N~~	~~O~~	~~C~~							
BV-25	COND. TO STEAM SEAL DSPRHTR 1	MEZZ - STEAM PACKING EXHAUSTER	N	C	C	C	C	SK				LS. 118

IP7016581

ASME TURBINE PERFORMANCE TESTING UNIT #2 Test # ___

Cycle Isolation Check off Sheets

Name _____

Before Test-Isolation: Start _____ End _____

After Test-Isolation: Start _____ End _____

Date: _____

SYSTEM: HEATER VENTS & MISCELLANEOUS DRAINS P&ID # 2 TEF-M2078B

Valve #	Description	Location	Class	Position Normal	Position Test	Position - Before Test As Found	As left	Initials	Position - After Test As Found	As Left	Initials	Comments
BV-162	LP HTR 4 CONT. VENT	5th	~~ER.~~	~~O~~	~~C~~							
BV-163	LP HTR 3 CONT VENT	3RD	~~ER~~	~~O~~	~~C~~							
BV-170	LP HTR 3 S/U VENT TO COND.	"	N	C	C	C	C	SK				3
BV-171	LP HTR 2 S/U VENT TO COND	MEZZ	N	C	C	C	C	SK				4
BV-174	LP HTR 1A S/U VENT TO COND	"	N	C	C	C	C	SK				4
BV-173	LP HTR 1B S/U VENT	"	N	C	C	C	C	SK				4
BV-172	LP HTR 1C S/U VENT	"	N	C	C	C	C	SK				4
BV-168	DRAIN COOLER 1 VENT TO COND	GF	N	C	C	C	C	SK				—
BV-169	LP HTR 4 S/U VENT	5th	N	C	C	C	C	SK				5

IP7016582

ASME - TURBINE PERFORMANCE TESTING UNIT #2 Test # ___ ___

Cycle Isolation Check off Sheets

Name _____

Before Test-Isolation: Start _____ End _____

After Test-Isolation: Start _____ End _____

Date: _____

SYSTEM: REHEAT SYSTEM P&ID # 2SGJ-M2071

Valve #	Description	Location	Class	Position Normal	Position Test	Position - Before Test As Found	As left	Initials	Position - After Test As Found	As Left	Initials	Comments
BV-56	STEAM TRAP 1 INLET ISOL. VLV.	GF 204-B	~~CR~~	~~O~~	~~C~~							
BV-57	STEAM TRAP 1 OUTLET ISOL VLV.	"	~~CR~~	~~O~~	~~C~~							
MBV-16	HOT REHEAT DRAIN TO DESPRHTR 3	GF - 204-C	N	C	C	C	C	SK				—
MBV-14	"	"	N	C	C	C	C	SK				3
MBV-18	COLD REHEAT DRN TO DESPRHTR 2	GF - 204-B	N	C	C	C	C	SK				4
ACV-58	ATTEMPERATOR SPRAY WATER FROM BFPT'S	7th FLOOR EAST ELEV.	N	C	C	C	C	SK				7
ABV-66	"	"	N	C	C	C	C	SK				7
ACV-59	"	"	N	C	C	C	C	SK				7
ABV-67	"	"	N	C	C	C	C	SK				7

IP70165583

ASME - TURBINE PERFORMANCE TESTING UNIT #2 Test # _ _

Cycle Isolation Check off Sheets

Name _____

Before Test-Isolation: Start _____ End _____

After Test-Isolation: Start _____ End _____ Date: _____

SYSTEM: HEATER VENTS & MISCELLANEOUS DRAINS P&ID # 2TEF-M2078A page 1 of 2

Valve #	Description	Location	Class	Position Normal	Position Test	Position - Before Test As Found	Position - Before Test As left	Position - Before Test Initials	Position - After Test As Found	Position - After Test As Left	Position - After Test Initials	Comments
BV-3	DEA HTR 5 CONTINUOUS VENT to ATM	14th	~~CR~~	~~O~~	~~C~~							
BV-7	"	"	~~CR~~	~~O~~	~~C~~							
BV-11	"	"	~~CR~~	~~O~~	~~C~~							
BV-75	CONTINUOUS VENT HP HTR 8A TO DEA 5	6th	~~CR~~	~~O~~	~~C~~							6
BV-76	HP HTR 7A CONTINUOUS VENT TO DEA HTR 5	5th	~~CR~~	~~O~~	~~C~~							
BV-77	HP HTR 6A CONTINUOUS VENT TO DEA HTR 5	3rd	~~CR~~	~~O~~	~~C~~							
BV-80	"	"	~~CR~~	~~O~~	~~C~~							
BV-79	HP HTR 7A "	5th	~~CR~~	~~O~~	~~C~~							
BV-78	HP HTR 8A "	6th	~~CR~~	~~O~~	~~C~~							6
BV-85	HP HTR 6A S/U VENT TO DEA HTR 5	3rd	N	C	C	C	C	SH				
BV-86	"	"	N	C	C	C	C	SH				
BV-91	HP HTR 6B S/U VENT TO DEA HTR 5	"	N	C	C	C	C	SH				
BV-92	"	"	N	C	C	C	C	SH				
BV-83	HP HTR 7A S/U VENT TO DEA HTR 5	5th	N	C	C	C	C	SH				
BV-84	"	"	N	C	C	C	C	SH				
BV-89	HP HTR 7B S/U VENT TO DEA HTR 5	"	N	C	C	C	C	SH				
BV-90	"	"	N	C	C	C	C	SH		West		? Can't test All taped up
BV-81	HP HTR 8A S/U VENT TO DEA HTR 5	6th	N	C	C	C	C	SH				
BV-82	"	"	N	C	C	C	C	SH				
BV-87	HP HTR 8B S/U VENT TO DEA HTR 5	"	N	C	C	C	C	SH				
BV-88	"	"	N	C	C	C	C	SH				
BV-2	DEA HTR 5 Bypass CONTINUOUS VENT TO ATMOS	14th	N	C	C	C	C	SH				
BV-4	"	"	N	C	C	C	C	SH				
BV-6	"	"	N	C	C	C	C	SH				

IP7016584

ASME TURBINE PERFORMANCE TESTING UNIT #2 Test # _ _

Cycle Isolation Check off Sheets

Name _____

Before Test-Isolation: Start _____ End _____

After Test-Isolation: Start _____ End _____ Date: _____

SYSTEM: HEATER VENTS & MISCELLANEOUS DRAINS P&ID # 2TEF-M2078A page 2 of 2

Valve #	Description	Location	Class	Position Normal	Position Test	Position - Before Test As Found	As left	Initials	Position - After Test As Found	As Left	Initials	Comments
BV-8	DEA HTR 5 Bypass CONTINUOUS VNT TO ATMS	14th	N	C	C	C	C	SK				
BV-10	"	"	N	C	C	C	C	SK				
BV-12	"	"	N	C	C	C	C	SK				
BV-14	"	"	N	C	C	C	C	SK				

IP7016585

ASME TURBINE PERFORMANCE TESTING UNIT #2 Test # _____

Cycle Isolation Check off Sheets

Name _____

Before Test-Isolation: Start _____ End _____

After Test-Isolation: Start _____ End _____ Date: _____

SYSTEM: BOILER VENTS & DRAINS P&ID # 2 SGF-M206B (CONT.)

Valve #	Description	Location	Class	Position Normal	Position Test	Position - Before Test As Found	As left	Initials	Position - After Test As Found	As Left	Initials	Comments
BV-54	EAST ECONOMIZER DISCH. HDR. DRN.	4th FLOOR	N	C	C	C	C	DB				
MBV-56	LOWER CONVECTION PASS HDR. DRAIN	"	N	C	C	C	C	DB				
MBV-58	"	"	N	C	C	C	C	DB				
MBV-66	DOWNCOMER DRAIN MANIFOLD DRAIN	2ND S. BOILER	N	C	C	C	C	DB				
BV-59	WEST END DOWNCOMER DRAIN	"	N	C	C	C	C	DB				
BV-60	"	"	N	C	C	C	C	DB				
BV-61	WEST SHELL DOWNCOMER DRAIN	"	N	C	C	C	C	DB				
BV-62	"	"	N	C	C	C	C	DB				
BV-63	CENTER SHELL DOWNCOMER DRAIN	"	N	C	C	C	C	DB				
BV-64	"	"	N	C	C	C	C	DB				
BV-67	EAST SHELL DOWNCOMER DRAIN	"	N	C	C	C	C	DB				
BV-68	"	"	N	C	C	C	C	DB				
BV-69	EAST END DOWNCOMER DRAIN	"	N	C	C	C	C	DB				
BV-70	"	"	N	C	C	C	C	DB				
BV-37	REHEATER OUTLET HDR	15th west	N	C	C	C	C	DB				
BV-39	" " "	"	N	C	C	C	C	DB				
BV-47	ECONOMIZER DISCH. LINE	"	N	C	C	C	C	DB				
BV-53	"	" east	N	C	C	C	C	DB				

IP7016586

ASME TURBINE PERFORMANCE TESTING UNIT #2 Test # _____

Cycle Isolation Check off Sheets

Name _____

Before Test-Isolation: Start _____ End _____

After Test-Isolation: Start _____ End _____

Date: _____

SYSTEM: CONDENSING P+ID# 2HRA-M2020/2SCA-M2056A

Valve #	Description	Location	Class	Position Normal	Position Test	Position - Before Test As Found	As left	Initials	Position - After Test As Found	As Left	Initials	Comments
BV-30	Condensate Normal	Mezz, SE corner condenser	~~CR~~	~~O~~	~~C~~							
BV-31	MAKE-UP	"	~~CR~~	~~O~~	~~C~~							
BV-19	Condensate Normal DRAW OFF	BSMT. SW CORNER CONDENSER	~~CR~~	~~O~~	~~C~~							
BV-20	"	"	~~CR~~	~~O~~	~~C~~							
BV-33	Condensate EMERG. MAKE-UP	BSMT. SE CORNER CONDENSER	~~N~~	~~O~~	~~C~~							
BV-34	"	"	~~N~~	~~O~~	~~C~~							
BV-23	COND. EMERG. DRAW-OFF	BSMT SW CORNER CONDENSER	~~N~~	~~O~~	~~C~~							
BV-24	"	"	~~N~~	~~O~~	~~C~~							
(BV-148)	TELL TAIL	LOCAL Nor.	N	C	C	C	C	DB				
(BV-175)	"	" Emerg.	N	C	C	C	C	DB				
(BV-176)	"	"	N	C	C	C	C	DB				
(BV-177)	"	"	N	C	C	C	C	DB				
ACV-25	COND. RECIRC.	BSMT. SW CORNER CONDENSER	N	C	C	C	C	DB				MAY HAVE TO CLOSE BV-28
BV-29	" BYPASS	"	N	C	C	C	C	DB				
BV-71	COND. MISC. SERVICE PUMP OUTLET	BSMT. "1C" COND. PUMP ABOVE HEAD	~~N~~	~~O~~	~~C~~							
BV-179	"	"	~~N~~	~~O~~	~~C~~							
(BV-178)	TELL TAIL	"	N	C	C	C	C	DB				
BV-90	HOT WELL DRAINS	N. OF CONENSER BSMT.	N	C	C	C	C	DB				
BV-91	"	"	N	C	C	C	C	DB				
BV-89	"	"	N	C	C	C	C	DB				
BV-92	HYDRAZINE FEED	"	N	C	C	O	C	DB				
BV-112	COND. LEAK DETECTION 1C	Basement - N. End to 1C Cond	~~N~~	~~O~~	~~C~~							OPEN after TEST
BV-113	"		~~N~~	~~O~~	~~C~~							"
BV-114	"		~~N~~	~~O~~	~~C~~							"

IP70165587

ASME TURBINE PERFORMANCE TESTING UNIT #2 Test # _____

Cycle Isolation Check off Sheets

Before Test-Isolation: Start _____ End _____ Name _____

After Test-Isolation: Start _____ End _____ Date: _____

SYSTEM: STEAM GENERATOR P+ID# 2SGA-M2063A

Valve #	Description	Location	Class	Position Normal	Position Test	Position - Before Test As Found	As left	Initials	Position - After Test As Found	As Left	Initials	Comments
MBV-142	BLR SB STM SUPPLY	18th floor East End - Middle Blr	N	O	C	C	C	DB				
~~BV-141~~	" " " "	"	~~N~~	~~O~~	~~C~~							
MBV-144	BLR SB Stm Supply	"	N	O	C	C	C	DB				
~~BV-143~~	" " " "	"	~~N~~	~~O~~	~~C~~							
~~MBV-24~~	~~CGR SB STM SUPPLY~~	"	~~N~~	~~C~~	~~C~~							
~~BV-17~~	" " " "	"	~~N~~	~~O~~	~~C~~							
MBV-140	RAH SB STM SUPPLY	18th floor West Side	N	C	C	C	C	DB				
~~BV-139~~	" " " "	"	~~N~~	~~O~~	~~C~~							
MBV-194	STM SUPPLY AUX HDR	17th floor West Side	N	O	C	C	C	DB				
BV-10	" " " "	"	~~N~~	~~O~~	~~C~~							
ACV-134	SH BYPASS TO RH	18th floor West Side	N	C	C	C	C	DB				
MUV-133	" " " "	"	N	C	C	C	C	DB				
MBV-135	" " " "	12th floor N West Side	N	C	C	C	C	DB				
BV-125	" " " "	"	N	~~O~~	~~C~~							
BV-136	SH BYPASS to COND	Mezz floor West Cond IC	N	~~O~~	~~C~~							
BV-138	"	"	N	~~O~~	~~C~~							
BV-169	"	"	N	~~O~~	~~C~~							
BV-170	"	"	N	~~O~~	~~C~~							

IP7016588

ASME TURBINE PERFORMANCE TESTING UNIT #2 Test # _____

Cycle Isolation Check off Sheets

Before Test-Isolation: Start _____ End _____ Name _____

After Test-Isolation: Start _____ End _____ Date: _____

SYSTEM: STEAM GENERATOR P+ID # 2SGA-M2063B

Valve #	Description	Location	Class	Position Normal	Position Test	Position - Before Test As Found	As left	Initials	Position - After Test As Found	As Left	Initials	Comments
BV-3	CONTINUOUS BLOW DOWN	18th E. END DRUM	CR	~~O~~	~~C~~							
MBV-4	"	18th E. END DRUM	CR	~~O~~	~~C~~							
BV-1	AUX STEAM SUPPLY	18th S. DRUM MIDDLE	N	~~O~~	~~C~~							
MBV-2	"	"	N	C	C	C	C	DB				
BV-18	DRAIN TO BLOWDOWN HEADER	18th W. END BOILER DRUM	N	C	C	C	C	DB				
BV-19	FROM LG-2	"	N	C	C	C	C	DB				
BV-208	"	"	N	C	C	C	C	DB				
BV-25	DRAIN TO BLOWDOWN HEADER FROM LG-3	"	N	C	C	C	C	DB				
BV-26	"	"	N	C	C	C	C	DB				
BV-209	"	"	N	C	C	C	C	DB				
BV-31	DRAIN TO BLOWDOWN HEADER FROM PS-5	"	N	C	C	C	C	DB				
BV-32	"	"	N	C	C	C	C	DB				
BV-11	DRAIN TO BLOWDOWN FROM LG-1	18th E. END BOILER DRUM	N	C	C	C	C	DB				
BV-12	"	"	N	C	C	C	C	DB				
BV-207	"	"	N	C	C	C	C	DB				
BV-172	SAMPLE 13	18 S. SIDE DRUM	CR	~~O~~	~~C~~							

IP70165589

ASME TURBINE PERFORMANCE TESTING UNIT #2 Test # _____

Cycle Isolation Check off Sheets

Name _____

Before Test-Isolation: Start _____ End _____

After Test-Isolation: Start _____ End _____ Date: _____

SYSTEM: BOILER VENTS AND DRAINS P&ID # 2SGF-M2068

Valve #	Description	Location	Class	Position Normal	Position Test	Position - Before Test As Found	As Left	Initials	Position - After Test As Found	As Left	Initials	Comments
BV-28	LWR CONVECTION PASS HEADER DRAIN	10th WEST SIDE	~~CR~~	~~O~~	~~C~~							
BV-35	"	"	~~CR~~	~~O~~	~~C~~							
BV-41	SECONDARY SUPERHEAT OUTLET HEADER DRAIN	15th WEST SIDE	~~CR~~	~~O~~	~~C~~							
BV-43	SECONDARY SUPERHEAT INTERM. INLET HEADER	"	~~CR~~	~~O~~	~~C~~							
BV-45	"	"	~~CR~~	~~O~~	~~C~~							
BV-49	SECONDARY SUPERHEAT PLATEN OUTLET DRAIN	"	~~CR~~	~~O~~	~~C~~							
BV-51	ROOF INLET HDR. DRAIN	"	~~CR~~	~~O~~	~~C~~							
BV-55	LWR. CONVEC. PASS HEADER DRAIN	10th EAST SIDE	~~CR~~	~~O~~	~~C~~							
BV-57	"	"	~~CR~~	~~O~~	~~C~~							
BV-65	DOWNCOMER DRAIN BLOW DOWN	2nd S. SIDE BOILER	~~CR~~	~~O~~	~~C~~							
BV-30	ECONOMIZER INLET HEADER DRAIN	10th WEST SIDE	N	C	C	C	C	DB				
BV-33	REHEATER INLET HEADER DRAIN	" "	N	C	C	C	C	DB				
MBV-29	LOWER CONVECTION PASS HDR. DRN.	4th floor	N	C	C	C	C	DB				
BV-31	ECONOMIZER INLET HDR. DRAIN	" "	N	C	C	C	C	DB				
BV-34	REHEATER INLET HDR. DRAIN	" "	N	C	C	C	C	DB				
MBV-36	LOWER CONVECTION PASS HDR. DRN	" "	N	C	C	C	C	DB				
BV-38	REHEATER OUTLET HDR. DRAIN	" "	N	C	C	C	C	DB				
BV-40	"	" "	N	C	C	C	C	DB				
MBV-42	SECONDARY SUPERHEAT OUTLET HDR. DRN	" "	N	C	C	C	C	DB				
MBV-44	SECONDARY SPRHTR INTERMED INLET DRN	" "	N	C	C	C	C	DB				
MBV-46	"	" "	N	C	C	C	C	DB				
BV-48	ECONOMIZER DISCH. HDR. DRN	" "	N	C	C	C	C	DB				
MBV-50	SECONDARY SPRHTR PLATEN INLET HDR DRN		N	C	C	C	C	DB				
MBV-52	ROOF INLET HDR. DRAIN		N	C	C	C	C	DB				

IP7016590

ASME TURBINE PERFORMANCE TESTING UNIT #2 Test # _____

Cycle Isolation Check off Sheets

Before Test-Isolation: Start _____ End _____ Name _____

After Test-Isolation: Start _____ End _____ Date: _____

SYSTEM: MAIN STEAM P+ID # 25GG-M2069

Valve #	Description	Location	Class	Position Normal	Position Test	Position - Before Test As Found	As left	Initials	Position - After Test As Found	As Left	Initials	Comments
MBV-9	HP STM to BFPT 1A	Turb Deck NE corner on BFPT1A	~~CR~~	~~O~~	~~C~~							
MBV-10	HP STM to BFPT 1B	Turb Deck SW on BFPT1B	~~CR~~	~~O~~	~~C~~							
BV-23	MBV-9 Bypass	Turb Deck BFPT1A NE	N	C	C	C	C	DB				
BV-24	MBV-10 Bypass	Turb Deck BFPT 1B SW	N	C	C	O	C	DB				
BV-58	MStm WARMING LINE	Mezz Deck East of MCC 2A03	~~CR~~	~~O~~	~~C~~							
MCV-18	" " "	"	N	C	C	C	C	DB				
MBV-17	" " "	"	N	C	C	C	C	DB				
MBV-11	BFPT HPSTM DRN to BD Tank	Mezz Floor Under Mstm line NE	N	C	C	C	C	DB				
MBV-12	" "	"	N	C	C	C	C	DB				
MBV-55	" "	"	N	C	C	C	C	DB				
MBV-56	" "	"	N	C	C	C	C	DB				
MBV-13	MStm DRN to BD Tank	"	N	C	C	C	C	DB				
MBV-14	" " "	"	N	C	C	C	C	DB				
MBV-25	" " "	"	N	C	C	C	C	DB				
MBV-26	" " "	"	N	C	C	C	C	DB				
MBV-21	MStm Vent to Atm	14th floor middle	N	C	C	C	C	DB				
BV 15	SAMPLE 14	MEZZ G. END	~~CR~~	~~O~~	~~C~~							
BV 16	"	MEZZ E END	~~CR~~	~~O~~	~~C~~							

IP7016591

ASME TURBINE PERFORMANCE TESTING UNIT #2 Test # _____

Cycle Isolation Check off Sheets

Before Test-Isolation: Start _____ End _____ Name _____

After Test-Isolation: Start _____ End _____ Date: _____

SYSTEM: CONDENSATE POLISHERS P&ID #2FWD-MJ038A/38B

Valve #	Description	Location	Class	Position Normal	Position Test	Position - Before Test As Found	Position - Before Test As left	Position - Before Test Initials	Position - After Test As Found	Position - After Test As Left	Position - After Test Initials	Comments
BV-121 (38B)	MU to Regen Pumps	1st floor Next to CNDS MU Bster Pump	~~CR~~	~~O~~	~~C~~							Regen Pumps - off
BV-125	" " " "	"	~~CR~~	~~O~~	~~C~~		From Vent drip or trickle					make sure pumps
MBV-76 (38A)	CNDS DEMIN 2A DRN	1st floor East of Demin	N	C	C	C		RW				don't start
MBV-77	" " 2B "	"	N	C	C	C		RW				
MBV-78	" " 2C "	"	N	C	C	C		RW				
MBV-79	" " 2D "	"	N	C	C	C		RW				
MBV-72	DM2A Resin Xfer Valve	"	N	C	C	C		RW				
MBV-73	" 2B " " "	"	N	C	C	C		RW				
MBV-74	" 2C " " "	"	N	C	C	C		RW				
MBV-75	" 2D " " "	"	N	C	C	C		RW				

IP7016592

ASME TURBINE PERFORMANCE TESTING UNIT #2 Test # _____

Cycle Isolation Check off Sheets

Name _____

Before Test-Isolation: Start _____ End _____

After Test-Isolation: Start _____ End _____

Date: _____

SYSTEM: BOILER FEED P&ID # 2FWA-M2035A

Valve #	Description	Location	Class	Position Normal	Position Test	Position - Before Test As Found	As left	Initials	Position - After Test As Found	As Left	Initials	Comments
BV-298	Bootstrap	MEZZ NEAR HTR. 2 (207-F)	N	C	C	C		RW				
BV-299	"	"	N	C	C	C		RW				
(BV-108)	TELL TAIL	"	N	C	C	C		RW				
BV-188	WARM-UP LINE	MEZZ UNDER 1A BFPT (203E)	~~N~~	~~O~~	~~C~~							
MBV-189	"	"	N	C	C	C		RW				
BV-365/107	TELL TAIL	"	N	C	C	C		RW				
ACV-14	BBFP RECIRC.	13th W. END D.A (202G)	N	C	C	O	C	RW				
ACV-15	"	"	N	C	C	C		RW				
ACV-16	"	"	N	C	C	C		RW				
ACV-17	BFP RECIRC	13th E. END DA (207G)	N	C	C	C		RW				
ACV-18	"	"	N	C	C	C		RW				
ACV-19	"	"	N	C	C	C		RW				

IP7016593

ASME TURBINE PERFORMANCE TESTING UNIT #2 Test # ____

Cycle Isolation Check off Sheets

Before Test-Isolation: Start _____ End _____ Name _____

After Test-Isolation: Start _____ End _____ Date: _____

SYSTEM: BOILER FEED P+ID# 2FWA-M2035B

Valve #	Description	Location	Class	Position Normal	Position Test	Position - Before Test As Found	Position - Before Test As left	Position - Before Test Initials	Position - After Test As Found	Position - After Test As Left	Position - After Test Initials	Comments
MBV-44	HP HEATERS BYPASS	TURBINE DECK E. of HP HTR. 6 (202H)	N	C	C	C		RW				
SGA-131	ECONOMIZER INLET HDR. DRAIN	11th FLOOR ECONOMIZER INLET	N	C	C	C		RW				
SGA-132	"	"	N	C	C	C		RW				
BV-202	SAMPLE 11	10th S. of mec 2809	~~CR~~	~~O~~	~~C~~							
BV-203	"	"	~~CR~~	~~O~~	~~C~~							

IP7016594

TURBINE PERFORMANCE TESTING UNIT "2 Test # _____

Cycle Isolation Check off Sheets

Name _____

Before Test-Isolation: Start _____ End _____

After Test-Isolation: Start _____ End _____

Date: _____

SYSTEM: EXTRACTION TRAPS & DRAINS P&ID# 2TEC-M2075 pg 3 of 4

NON-CRITICAL VALUES

Valve #	Description	Location	Class	Position Normal	Position Test	Position - Before Test As Found	As left	Initials	Position - After Test As Found	As Left	Initials	Comments
2TEC-ACV-74	HP HTRS 8A & 8B EXTRACTION DRAIN	GF BY LO CONT.	N	O	C							
ACV-80	HP HTR 8A EXTRACTION DRAIN	"	N	O	C							
ACV-86	HP HTR 8B EXTRACTION DRN.	"	N	O	C							
ACV-92	HP HTRS 6A & 6B EXTRCT. DRN.	"	N	O	C							
ACV-98	HP HTR 6A EXTRCT. DRN.	"	N	O	C							
ACV-104	HP HTR 6B EXTRCT. DRN.	"	N	O	C							
ACV-140	BFPT 1B EXTRCT DRN.	"	N	O	C							
ACV-134	BFPT 1A EXTRCT. DRN.	"	N	O	C							
ACV-128	DEA HTR 5 EXTRCT. DRN.	"	N	O	C							
ACV-122	BFPT 1A & 1B EXTRCT DRN.	"	N	O	C							
ACV-116	DEA HTR 5 EXTRCT. DRN.	"	N	O	C							
ACV-110	"	"	N	O	C							
ACV-26	LP HTR 2 EXTRCT DRN	GF NWEST OF LP COND	N	O	C							
ACV-30	"	"	N	O	C							
ACV-34	LP HTR 3 EXTRCT DRN	"	N	O	C							
ACV-38	"	"	N	O	C							
ACV-42	LP HTR 4 EXTRCT DRN	"	N	O	C							
ACV-46	"	"	N	O	C							
ACV-50	LP HTR 2 EXTRACTION DRN	"	N	O	C							
ACV-54	"	"	N	O	C							
ACV-58	LP HTR 3 EXTRACTION DRN	"	N	O	C							
ACV-62	"	"	N	O	C							
ACV-66	LP HTR 4 EXTRACTION DRN	"	N	O	C							
ACV-70	"	"	N	O	C							

IP70166595

ASME TURBINE PERFORMANCE TESTING UNIT "2 Test " _____

Cycle Isolation Check off Sheets

Before Test-Isolation: Start _____ End _____ Name _____

After Test-Isolation: Start _____ End _____ Date: _____

SYSTEM: EXTRACTION TRAPS & DRAINS P+ID# 2TEC-M2075 pg. 4 of 4

Valve #	Description	Location	Class	Position Normal	Position Test	Position - Before Test As Found	Position - Before Test As left	Position - Before Test Initials	Position - After Test As Found	Position - After Test As Left	Position - After Test Initials	Comments
ACV-2	LP HTR 2 EXTRACTION DRN	GF WEST OF L/O CENT.	N	O	C							
ACV-6	"	"	N	O	C							
ACV-10	LP HTR 3 EXTRACTION DRN	"	N	O	C							
ACV-14	"	"	N	O	C							
ACV-18	LP HTR 4 EXTRACTION DRN	"	N	O	C							
ACV-22	"	"	N	O	C							
ACV-146	BFPT to LP COND 1C	2ND	N	O	C							
ACV-152	BFPT to HP COND 1A	"	N	O	C							
BV-163	MISC. DRAINS RECV. TANK DRN	GF MISC. DRAINS RECV.	N	C	C							

IP7016596

ASME TURBINE PERFORMANCE TESTING UNIT #2 Test # ___

Cycle Isolation Check off Sheets

Name _____

Before Test-Isolation: Start _____ End _____

After Test-Isolation: Start _____ End _____

Date: _____

SYSTEM: HIGH PRESSURE HEATER DRAINS P&ID # 2TED-M2076

Valve #	Description	Location	Class	Position Normal	Position Test	Position - Before Test As Found	Position - Before Test As left	Position - Before Test Initials	Position - After Test As Found	Position - After Test As Left	Position - After Test Initials	Comments
BV-20	HTR 8A ALTN (HI LEVEL) DUMP	Ground Floor East Side Cond 1A	CR	O	C							
BV-19	"	"	CR	O	C							
BV-22	HTR 8B ALTN (HI LEVEL) DUMP	"	CR	O	C							
BV-21	"	"	CR	O	C							
BV-28	HTR 7A ALTN (HI LEVEL) DUMP	"	CR	O	C							
BV-27	"	"	CR	O	C							
BV-30	HTR 7B ALTN (HI LEVEL) DUMP	"	CR	O	C							
BV-29	"	"	CR	O	C							
BV-36	HTR 6A ALTN (HI LEVEL) DUMP	"	CR	O	C							
BV-35	"	"	CR	O	C							
BV-38	HTR 6B ALTN (HI LEVEL) DUMP	"	CR	O	C							
BV-37	"	"	CR	O	C							
ACV-13	HP Htr Drains Pump 1A Recirc	3rd Floor Near HP Htr 6A	N	C	C							
ACV-14	" 1B	" 6B	N	C	C							

IP7016597

ASME TURBINE PERFORMANCE TESTING UNIT #2 Test # _ _

Cycle Isolation Check off Sheets

Name _____

Before Test-Isolation: Start _____ End _____

After Test-Isolation: Start _____ End _____

Date: _____

SYSTEM: LOW PRESSURE HEATER DRAINS P&ID# 2TEE-M2077 / 2FWF-M2040

Valve #	Description	Location	Class	Position Normal	Position Test	Position - Before Test As Found	As left	Initials	Position - After Test As Found	As Left	Initials	Comments
BV-17	Htr 4 ALTN (HI LEVEL) DUMP	Mezz floor West Side Cond IC	CR	O	C							
BV-9	"	"	CR	O	C							
BV-19	Htr 3 ALTN (HI LEVEL) DUMP	Ground floor West Side Cond IC	CR	O	C							
BV-11	"	"	CR	O	C							
BV-21	Htr 2 ALTN (HI LEVEL) DUMP	"	CR	O	C							
BV-13	"	"	CR	O	C							
BV-22	FLASH TANK ALTN (HI LEVEL) DUMP	Ground floor SW Corner Cond IC	CR	O	C							
BV-15	"	"	CR	O	C							
BV-129	Cycle MU to LP DRNS	Ground floor @ DRN COOLER	N	C	C							
2FWF (M2040)												
BV-66	Cycle MU to LP DRNS	Ground floor Overhead So. of DRNCLR	N	O	C							

IP7016598

ASME TURBINE PERFORMANCE TESTING UNIT #2 Test # ___

Cycle Isolation Check off Sheets

Name _____

Before Test-Isolation: Start _____ End _____

After Test-Isolation: Start _____ End _____

Date: _____

SYSTEM: TURBINE P&ID # 2TGA-M2079

Valve #	Description	Location	Class	Position Normal	Position Test	Position - Before Test As Found	As left	Initials	Position - After Test As Found	As Left	Initials	Comments
2TGA-5 BY-	SPRAY SUPPLY VLV FROM CONDENSING	3rd BY GE TRAILER	CR	O	C							

IP70165599

ASME TURBINE PERFORMANCE TESTING UNIT #2 Test # ___ ___

Cycle Isolation Check off Sheets

Name _____

Before Test-Isolation: Start _____ End _____

After Test-Isolation: Start _____ End _____ Date: _____

SYSTEM: TURBINE SEALS & DRAINS P&ID# 2TGC-M2080B

Valve #	Description	Location	Class	Position Normal	Position Test	Position - Before Test As Found	As left	Initials	Position - After Test As Found	As Left	Initials	Comments
MBV-31	COMBINED REHEAT VALVE 1A3 AFTER SEAT DRN	MEZZ	N	O	C							
MBV-32	COMB. REHEAT VLV 1B3 AFTER SEAT DRN	"	N	O	C							
MBV-33	MN. STM. STOP VLV. 1A1 Before seat DRN	"	N	O	C							
MBV-37	TURB. CNTRL VLV 1A2 Before seat DRN	"	N	O	C							
MBV-34	MN. STM STOP VLV 1B1 BSD	"	N	O	C							
MBV-38	TURB CNTRL VLV 1B2 BSD	"	N	O	C							
MBV-35	MN. STEAM STOP VLV. 1C1 BSD	"	N	O	C							
MBV-39	TURB CNTRL VLV. 1C2 BSD	"	N	O	C							
MBV-36	MN. STEAM STOP VLV. 1D1 BSD	"	N	O	C							
MBV-40	TURB. CONTROL VLV. 1D2 BSD	"	N	O	C							
MBV-49	DRAIN HDR CONTROL VLV	GF	N	O	C							

IP7016600

ASME TURBINE PERFORMANCE TESTING UNIT #2 Test # ____

Cycle Isolation Check off Sheets

Name _____

Before Test-Isolation: Start _____ End _____

After Test-Isolation: Start _____ End _____

Date: _____

SYSTEM: Aux. STEAM P&ID # 2PSA-M2008 / 2TEA-M2073

Valve #	Description	Location	Class	Position Normal	Position Test	Position - Before Test As Found	As left	Initials	Position - After Test As Found	As Left	Initials	Comments
BV-21	DA-Pegging Stm	15th floor - North of east elevator	N	O	C							
BV-22	DA-Pegging Stm	"	N	O	C							
(BV-118)	" - telltale valve	"	N	C	C							
MBV-17	CRH Supply to Aux Stm	9th floor behind east elevator	N	O	C							
(BV-36/37)	telltale valves	"	N	C	C							
BV-12	CRH Supply to Aux Stm	"	N	O	C							
BV-14	CRH Supply " "	"	N	O	C							
BV-15	CRH Supply " "	"	N	C	C							
BV-133	Aux Stm to DA Tank	13th floor behind West elev - on DA tank	N	O	C							
BV-6	" " " "	"	N	O	C							
(BV-134)	telltale valve	"	N	C	C							
BV-7	CNDS to Aux Stm DSH	5th floor by east elevator	N	O	C							
BV-8	" " " " "	"	N	O	C							
BV-9	" " " " "	"	N		C							
BV-19	Aux Stm to BFPT	Mezz Floor NE corner	N	O	C							
BV-18	" " " "	" "	N	O	C							
(BV-39/40)	telltale	" "	N	C	C							
TEA (M2073) MBV-118	Aux Stm to BFPT	Mezz Floor NE Corner	N	O	C							

IP7016601

Cycle Isolation Check off Sheets

Before Test-Isolation: Start _____ End _____

After Test-Isolation: Start _____ End _____

Name _____

Date: _____

SYSTEM: CONDENSING P&ID # 2HRA-M2020 / 2SCA-M2056 A

Valve #	Description	Location	Class	Position Normal	Position Test	Position - Before Test As Found	As left	Initials	Position - After Test As Found	As Left	Initials	Comments
BV-115	COND. LEAK DETECTION 1B	N. SIDE COND. 1B COND.	N	~~O~~	~~C~~							OPENS after test
BV-116	"	"	N	~~O~~	~~C~~							"
BV-117	"	"	N	~~O~~	~~C~~							"
BV-118	COND. LEAK DETECTION 1A	N. SIDE COND. 1A COND.	N	~~O~~	~~C~~							"
BV-119	"	"	N	~~O~~	~~C~~							"
	P&ID 2SAC-M2056A											
BV-529	GEN. BLDG. SP. COND DRAIN to UNIT 2	BASEMENT W. END TO 1C COND	N		C							

IP7016602

ASME TURBINE PERFORMANCE TESTING UNIT #2 Test # _____

Cycle Isolation Check off Sheets

Before Test-Isolation: Start _____ End _____

After Test-Isolation: Start _____ End _____

Name _____

Date: _____

SYSTEM: CONDENSER AIR EXTRACTION P&ID # 2HRB-M2021

Valve #	Description	Location	Class	Position Normal	Position Test	Position - Before Test As Found	As left	Initials	Position - After Test As Found	As Left	Initials	Comments
BV-109	SEPARATOR MAKE-UP	MEZZ. CONDEN. VAC PUMPS	CR	O	C							WATCH SEPARATOR
BV-110	"	"	CR	O	C							TANK LEVEL
BV-111	"	"	CR	O	C							
BV-112	"	"	CR	O	C							

IP70166603

HOPE CREEK TURBINE PERFORMANCE TESTING UNIT 1 TEST _____

Cycle Isolation Check off Sheets

Name _____

Before Test-Isolation: Start _____ End _____

After Test-Isolation: Start _____ End _____

Date: _____

SYSTEM: STEAM CYCLE SAMPLING & ANALYSIS P&ID# 2SAC-M2054A (1 of 2)

Valve #	Description	Location	Class	Position Normal	Position Test	Position - Before Test As Found	As left	Initials	Position - After Test As Found	As Left	Initial	Comments
BV-17	LAB SAMPLE #1 MU to Cond	Water Lab Panel Behind	CR	O	C							
BV-5	" BD		N		C							
BV-30	" Needle Valve		CR	O	C							
BV-6	LAB SAMPLE #2 CP Disc BD		N		C							Sample #2 - OPEN
BV-19	LAB SAMPLE #3 Demin 1A Outlet		CR	O	C							
BV-7	" BD		N		C							
BV-32	" Needle Valve		CR	O	C							
BV-20	LABSAMPLE #4 Demin 1B Outlet		CR	O	C							
BV-8	" BD		N		C							
BV-33	" Needle Valve		CR	O	C							
BV-21	LAB SAMPLE #5 Demin 1C Outlet		CR	O	C							
BV-9	" BD		N		C							
BV-34	" Needle Valve		CR	O	C							
BV-22	LAB SAMPLE #6 Demin 1D Out		CR	O	C							
BV-10	" BD		N		C							
BV-35	" Needle Valve		CR	O	C							
BV-23	LAB SAMPLE #7 Cnds Polishing Out		CR	O	C							
BV-11	" BD		N		C							
BV-36	" Needle Valve		CR	O	C							
BV-1	LAB SAMPLE #8 Cnds after Gland Cond		CR	O	C							
BV-12	" BD		N		C							
BV-24	"		CR	O	C							
BV-37	" Needle Valve		CR	O	C							
(cont.)												

IP7016604

Cycle 1 Isolation Check off Sheets

Before Test-Isolation: Start _____ End _____

After Test-Isolation: Start _____ End _____

Name _____

Date: _____

SYSTEM: STM CYCLE SAMPLING + ANALYSIS P+ID # 2SAC-M2054A (2 of 2)

Valve #	Description	Location	Class	Position Normal	Position Test	Position - Before Test As Found	As left	Initials	Position - After Test As Found	As Left	Initials	Comments
CV-2	LAB SAMPLE 9 DA INLET	WATER LAB - Behind Panel	CR	O	C							
BV-13	LAB SAMPLE 10 DA Outlet BD		N		C							Sample #10 - OPEN
BV-26	LAB SAMPLE 11 ECON INLET		CR	O	C							Sample #11 - close root valves
BV-14	" BD		N		C							
BV-39	" Needle Valve		CR	O	C							
BV-15	LAB SAMPLE 12 Drum BD		N	O	C							Sample #12 - OPEN
BV-3	LAB SAMPLE 13 Sent Stm		CR	O	C							Sample #13 - close root valves
BV-4	LAB SAMPLE 14 Main Stm		CR	O	C							Sample #14 - close root valves
BV-16	" BD		N		C							
BV-26	"		CR	O	C							
BV-41	"		CR	O	C							
BV-107	Sample Recovery Pump Suction		N	O	C							
BV-110	Discharge		N	O	C							

IP7016605

ASME TURBINE PERFORMANCE TESTING UNIT #2 Test # _____

Cycle Isolation Check off Sheets

Before Test-Isolation: Start _____ End _____ Name _____

After Test-Isolation: Start _____ End _____ Date: _____

SYSTEM: AIR PREHEAT P&ID# 2SGC-M2065

Valve #	Description	Location	Class	Position Normal	Position Test	Position - Before Test As Found	As left	Initials	Position - After Test As Found	As Left	Initials	Comments
BV-113	DA WATER SUPPLY	Basement @ APH Pumps	N	O	C							
BV-114	" " "	"	N	O	C							
BV-119	" " "	"	N	O	C							
BV-122	APH Recirc to Pump	"	N	O	C							
BV-123	" " "	"	N	O	C							
BV-130	APH EMGCY RTN COND	"	N	O	C							
BV-131	" " " "	"	N	O	C							
BV-140	APH RTN to DA	13½ floor-east	N	O	C							
BV-141	APH RTN to COND	Basement West Side	N	O	C							
BV-137	" " "	"	N	O	C							
BV-139	" " "	"	N	O	C							

IP7016606

ASME TURBINE PERFORMANCE TESTING UNIT #2 Test # _____

Cycle Isolation Check off Sheets

Before Test-Isolation: Start _____ End _____ Name _____

After Test-Isolation: Start _____ End _____ Date: _____

SYSTEM: SOOT BLOWING P&ID# 2SGI-M2070

Valve #	Description	Location	Class	Position Normal	Position Test	Position - Before Test As Found	As left	Initials	Position - After Test As Found	As Left	Initials	Comments
ACV-26	SECONDARY SUPERHTR. PLATEN OUTLET HDR.	18th WEST SIDE BOILER	N		C							DISABLE SOOT
ACV-25	"	18th EAST SIDE BOILER	N		C							BLOWING SYSTEM
ACV-3	SECONDARY SUPERHTR. OUTLET HDR.	18th WEST SIDE BOILER	N		C							AT CONTROL
ACV-4	"	"	N		C							PANEL
MBV-35	HP EXTRACTION DRAIN HDR.	4th S.E. Side BOILER	N		C							
MBV-178	"	4th N.E Side of BOILER	N		C							

IP7016607

ASME - TURBINE PERFORMANCE TESTING UNIT #2 Test # _ _

Cycle Isolation Check off Sheets

Name _____

Before Test-Isolation: Start _____ End _____

After Test-Isolation: Start _____ End _____

Date: _____

SYSTEM: EXTRACTION TRAPS & DRAINS P&ID # 2TEC-M2075

CRITICAL VALVES (1/4)

Valve #	Description		Location	Class	Position Normal	Position Test	Position - Before Test As Found	As left	Initials	Position - After Test As Found	As Left	Initials	Comments
BV-27	LP HTR 2	LP TURB SECTION 1B	BSMT. N.W. CORNER OF CONDENSER ON BOTTOM ROW	CR	O	C							
BV-31	LP HTR 2			CR	O	C							
BV-35	LP HTR 3			CR	O	C							
BV-39	LP HTR 3			CR	O	C							
BV-43	LP HTR 4			CR	O	C							
BV-47	LP HTR 4			CR	O	C							
BV-3	LP HTR 2	LP TURB SECTION 1A	BSMT N.E CORNER OF CONDENSER	CR	O	C							
BV-7	LP HTR 2			CR	O	C							
BV-11	LP HTR 3			CR	O	C							
BV-15	LP HTR 3			CR	O	C							
BV-19	LP HTR 4			CR	O	C							
BV-23	LP HTR 4			CR	O	C							
BV-51	LP HTR 2	LP TURB. SECTION 1C	BSMT. N.W. CORNER OF CONDENSER TOP ROW	CR	O	C							
BV-55	LP HTR 2			CR	O	C							
BV-59	LP HTR 3			CR	O	C							
BV-63	LP HTR 3			CR	O	C							
BV-67	LP HTR 4			CR	O	C							
BV-71	LP HTR 4			CR	O	C							
BV-65	LT. HTR 4			CR	O	C							

IP7016608

TURBINE PERFORMANCE TESTING UNIT #2 Test # _ ____

Cycle Isolation Check off Sheets

Name _____

Before Test-Isolation: Start _____ End _____

After Test-Isolation: Start _____ End _____

Date: _____

SYSTEM: EXTRACTION TRAPS & DRAINS P&ID # 2TEC-M2075

CRITICAL VALVES (Cont.) (2/4)

Valve #	Description	Location	Class	Position Normal	Position Test	Position - Before Test As Found	As left	Initials	Position - After Test As Found	As Left	Initials	Comments

IP70166 09

IP7016610

Cycle Isolation

Monday 4/8 am Test #1

Close SB @ Control Room
problem - Cond A air inleakage 150 scfm (when SB o/s)

IP Admission Cooling Steam - measure (don't isolate)
Air Preheat o/s
Polisher o/s - no regeneration

HP Heaters - high level dumps (Joe-O don't isolated unless hot)
& LP Heaters
Dave-S check Hotwell drain lines
DA vents - 3 continuous vents left open

Dick Spence Need Reference for levels check w/ Bill-M
Drum / DA / hotwell

Between Tests
open SB to blow
open Condenser makeup to fill
open Blowdown Drum

Re-isolated Test #2

IP7016611

TURBINE CYCLE PERFORMANCE TESTING | IGS Unit # 2 | Test # ____ | Name: Steve Kelly

***** CYCLE ISOLATION CHECKOFF SHEETS ***** | Date: ____ | Time: ____

VALVE CLASSIFICATION: ** CRITICAL VALVE LIST**

Class 1*- **CRITICAL VALVES-** valves which are required to be opened immediately due to operational upset or unit trip

Class 1- **Open valves just prior to test and standby, valves need to be opened at the end of each test**

Class 2- **Close valves up to 2 hours prior to each test (before Class I valves), re-open valves after Class I valves**

Class 3- **Close valves at the beginning of the day and open at the end of the day**

Class NC- **Non-Critical Valves- verify normally closed valves are closed (and not leaking) and normally opened valves are open**

						VALVE POSITION		CHECKOFF with Initials				Downstream	
VALVE NUMBER	DESCRIPTION	P&ID	Floor	Location	CLASS	Normal	Test	Open	Close	Open	Close	Temp (F)	NOTES:
2TED-BV-0019	HP Heater 8A Alternate Drain	M2076	1	East of condenser	1*	open	close		✓	✓			
2TED-BV-0020	HP Heater 8A Alternate Drain	M2076	1	East of condenser	1*	open	close						
2TED-BV-0027	HP Heater 7A Alternate Drain	M2076	1	East of condenser	1*	open	close		✓	✓			
2TED-BV-0028	HP Heater 7A Alternate Drain	M2076	1	East of condenser	1*	open	close						
2TED-BV-0035	HP Heater 6A Alternate Drain	M2076	1	East of condenser	1*	open	close		✓	✓			
2TED-BV-0036	HP Heater 6A Alternate Drain	M2076	1	East of condenser	1*	open	close						
2TED-BV-0021	HP Heater 8B Alternate Drain	M2076	1	East of condenser	1*	open	close		✓	✓			
2TED-BV-0022	HP Heater 8B Alternate Drain	M2076	1	East of condenser	1*	open	close						
2TED-BV-0029	HP Heater 7B Alternate Drain	M2076	1	East of condenser	1*	open	close		✓	✓			
2TED-BV-0030	HP Heater 7B Alternate Drain	M2076	1	East of condenser	1*	open	close						
2TED-BV-0037	HP Heater 6B Alternate Drain	M2076	1	East of condenser	1*	open	close		✓	✓			
2TED-BV-0038	HP Heater 6B Alternate Drain	M2076	1	East of condenser	1*	open	close						
2TEC-BV-0073	HP Htrs 8A & 8B- extr drain	M2075	1	E of Lube Oil Centrifuge	2	open	close		✓	✓			
2TEC-BV-0075	HP Heaters 8A and 8B Extr Drain	M2075	1	E of Lube Oil Centrifuge	2	open	close						
2TEC-BV-0075	HP Htrs 8A- extr drain	M2075	1	E of Lube Oil Centrifuge	2	open	close		✓	✓			
2TEC-BV-0085	HP Heater 8B Extr Drain	M2075	1	E of Lube Oil Centrifuge	2	open	close						
2TEC-BV-0065	LP Heater 4 Extr Drain ACU 66	M2075	1	NW corner C Cond ceiling	1	open	close		✓				
2SGJ-BV-0056	Cold Reheat Stm Trap- Inlet	M2071	1	204-B	1	open	close						
2SGJ-BV-0057	Cold Reheat Stm Trap- Outlet	M2071	1	204-B	1	open	close		✓	✓			
2TEC-BV-0027	LP Heater 2 Extr Drain	M2075	1	NW corner of cond	3	open	close		✓				
2TEC-BV-0033	LP Heater 2 Extr Drain	M2075	1	bottom row	3	open	close		✓				
2TEC-BV-0035	LP Heater 3 Extr Drain	M2075	1	"	3	open	close		✓				
2TEC-BV-0039	LP Heater 3 Extr Drain	M2075	1	"	3	open	close		✓				
2TEC-BV-0043	LP Heater 4 Extr Drain	M2075	1	"	3	open	close		✓				
2TEC-BV-0047	LP Heater 4 Extr Drain	M2075	1	"	3	open	close		✓				
2TEC-BV-0009	LP Heater 2 Extr Drain	M2075	1	NE corner of cond	3	open	close		✓				
2TEC-BV-0007	LP Heater 2 Extr Drain	M2075	1	"	3	open	close		✓				
2TEC-BV-0011	LP Heater 3 Extr Drain	M2075	1	"	3	open	close		✓				
2TEC-BV-0015	LP Heater 3 Extr Drain	M2075	1	"	3	open	close		✓				
2TEC-BV-0019	LP Heater 4 Extr Drain	M2075	1	"	3	open	close		✓				
2TEC-BV-0023	LP Heater 4 Extr Drain	M2075	1	"	3	open	close		✓				
2TEC-BV-0061	LP Heater 2 Extr Drain	M2075	1	NW corner of cond	3	open	close		✓				
2TEC-BV-0065	LP Heater 2 Extr Drain	M2075	1	top row	3	open	close		✓				
2TEC-BV-0059	LP Heater 3 Extr Drain	M2075	1	"	3	open	close		✓				
2TEC-BV-0063	LP Heater 3 Extr Drain	M2075	1	"	3	open	close		✓				
2TEC-BV-0067	LP Heater 4 Extr Drain	M2075	1	"	3	open	close		✓				
2TEC-BV-0071	LP Heater 4 Extr Drain	M2075	1	"	3	open	close		✓				

IP7016612

TURBINE CYCLE PERFORMANCE TESTING | IGS Unit # 2 | Test # ____

***** CYCLE ISOLATION CHECKOFF SHEETS ***** | Date: ____ | Time: ____ | Name: TRWOT

VALVE CLASSIFICATION: ** CRITICAL VALVE LIST**

Class 1*- **CRITICAL VALVES-** valves which are required to be opened immediately due to operational upset or unit trip

Class 1- **Open valves just prior to test and standby, valves need to be opened at the end of each test**

Class 2- **Close valves up to 2 hours prior to each test (before Class I valves), re-open valves after Class I valves**

Class 3- **Close valves at the beginning of the day and open at the end of the day**

Class NC- **Non-Critical Valves- verify normally closed valves are closed (and not leaking) and normally opened valves are open**

						VALVE POSITION		CHECKOFF with Initials				Downstream	
VALVE NUMBER	DESCRIPTION	P&ID	Floor	Location	CLASS	Normal	Test	Open	Close	Open	Close	Temp (F)	NOTES:
2HRA-BV-0019	Condensate Normal Drawoff	M2020	1	SW corner of condenser	1	open	close						
2HRA-BV-0020	Condensate Normal Drawoff	M2020	1	SW corner of condenser	1	open	close						
-23	emergency drawoff												
2TEE-BV-0015	Flash Tank Altrn Drain to Cndr	M2077	1	southwest of condenser	1*	open	close						
2TEE-BV-0022	Flash Tank Altrn Drain to Cndr	M2077	1	southwest of condenser	1*	open	close						
2TEE-BV-0011	LP Htr 3 Altr HLvl Drain	M2077	1	west of condenser	1*	open	close						
2TEE-BV-0019	LP Htr 3 Altr HLvl Drain	M2077	1	west of condenser	1*	open	close						
2TEE-BV-0013	LP Htr 2 Altr HLvl Drain	M2077	1	west of condenser	1*	open	close						
2TEE-BV-0021	LP Htr 2 Altr HLvl Drain	M2077	1	west of condenser	1*	open	close						
2PSA-BV-0082	Aux Stm ~~Trap 5~~ NO ORF #1	M2008	1	BMT BY EHC	2								
2FWD-BV-0121 4A S.	Makeup to Regen Pumps	M2038B	1	Cond Polisher Regen Pumps	3								
2FWD-BV-0125 4B S.	Makeup to Regen Pumps	M2038B	1	Cond Polisher Regen Pumps	3								
2TEE-BV-0009	LP Htr 4 Altr HLvl Drain	M2077	2	west of condenser	1*								
2TEE-BV-0017	LP Htr 4 Altr HLvl Drain	M2077	2	west of condenser	1*								
2FWC-BV-0026	Deaerator Recirc to Cond	M2037	2	west of condenser	1					JP			
2FWC-BV-0027	Deaerator Recirc to Cond	M2037	2	west of condenser	1					JP			
* 2FWC-MBV-0090	Deaerator Recirc to Cond	M2037	2	west of condenser	1								
2HRA-BV-0030	Condensate Normal Makeup	M2020	2	southwest of condenser	1								
2HRA-BV-0031	Condensate Normal Makeup	M2020	2	southwest of condenser	1								
2HRA-BV-0032	Condensate Normal Makeup	M2020	2	southwest of condenser	1								
2TGC-BV-0010 * CR	Main Stm Supply to Turb Seals	M2080A	2	west of M Stm Header	1*								
2FWA-BV-0389	HP Stop Valve 1B1 stem leakoff	M2035C	2	NW of Condenser	1								
2FWA-BV-0390	HP Stop Valve 1B1 seat drain	M2035C	2	NW of Condenser	1								
2FWA-BV-0391	HP Stop Valve 1A1 seat drain	M2035C	2	N of Condenser	1								
2SGJ-BV-0090	Cond to CRH Desuperhtr 2	M2071	2		1								
2HRB-BV-0109	Separator 1D Makeup Flow	M2021	2	Cond Vacuum Pump D	2								
2HRB-BV-0110	Separator 1C Makeup Flow	M2021	2	Cond Vacuum Pump C	2								
2HRB-BV-0111	Separator 1B Makeup Flow	M2021	2	Cond Vacuum Pump B	2								
2HRB-BV-0112	Separator 1A Makeup Flow	M2021	2	Cond Vacuum Pump A	2					JP			
2TGC-BV-0058	Auxiliary Steam to Cold Reheat	M2080A	2	top of valve deck	1					JP			
2SGG-BV-0058	Mn Stm Warming Line	M2069	2	NE of MCC 2A03	3								
2SGG-MBV-0009	Main Steam to BFPT 1A	M2069	3	NE of BFPT 1A	1								
2SGG-MBV-0010	Main Steam to BFPT 1B	M2069	3	SW of BFPT 1B	1								

* BACKSEATED

IP7016613

2TGA-BV-000~~3~~ 3, 4	Exhaust Hood Spray Supply	M2079	~~3~~ 2	by feedwater heater	1								
2TEF-BV-0163	LP Htr 3 Cont Vent to Cond	M2078B	3	LP Htr 3	2								
2TEF-BV-0077	HP Htr 6A Cont Vent to DA	M2078A	3	HP Htr 6A	2								
2TEF-BV-0080	HP Htr 6B Cont Vent to DA	M2078A	3	HP Htr 6B	2								

move to boiler list

IP7016614

*** CYCLE ISOLATION CHECKOFF SHEETS *** Date: 8/4/02 Time: 7:50 Name: Bliss

VALVE CLASSIFICATION: ** CRITICAL VALVE LIST**

Class 1*- CRITICAL VALVES- valves which are required to be opened immediately due to operational upset or unit trip

Class 1- Open valves just prior to test and standby, valves need to be opened at the end of each test

Class 2- Close valves up to 2 hours prior to each test (before Class I valves), re-open valves after Class I valves

Class 3- Close valves at the beginning of the day and open at the end of the day

Class NC- Non-Critical Valves- verify normally closed valves are closed (and not leaking) and normally opened valves are open

						VALVE POSITION		CHECKOFF with Initials				Downstream	
VALVE NUMBER	DESCRIPTION	P&ID	Floor	Location	CLASS	Normal	Test	Open	Close	Open	Close	Temp (F)	NOTES:
2SGF-BV-0065	Downcomer Drain Blowdown Manifol	M2068	2	S side of boiler					DB				
2TEF-BV-0076	HP Htr 7A Cont Vent to DA	M2078A	5	HP Htr 7A	2			✓	DB				
2TEF-BV-0079	HP Htr 7B Cont Vent to DA	M2078A	5	HP Htr 7B	2			✓	DB				
2TEF-BV-0162	LP Htr 4 Cont Vent to Cond	M2078B	5	LP Htr 4	2			✓	DB				
2TEF-BV-0075	HP Htr 8A Cont Vent to DA	M2078A	6	HP Htr 8A	2			✓	DB				
2TEF-BV-0078	HP Htr 8B Cont Vent to DA	M2078A	6	HP Htr 8B	2			✓	DB				
2PSA-MBV-0017	Cold Reheat Supply to Aux Stm	M2008	9	behind east elevator	2				DB				
2PSA-BV-0012	Cold Reheat Supply to Aux Stm	M2008	9	behind east elevator	2				DB				
2PSA-BV-0014	Cold Reheat Supply to Aux Stm	M2008	9	behind east elevator	2				DB				
2SGF-BV-0055	Lwr Conveyor Pass Header	M2068	10	east	3				DB				
2SGF-BV-0057	Lwr Conveyor Pass Header	M2068	10	east	3				DB				
2SGF-BV-0035	Lwr Conveyor Pass Header	M2068	10	west	3				DB				
2SGF-BV-0028	Lwr Conveyor Pass Header	M2068	10	west	3				DB				
2FWA-BV-0037	BFP 1A Recirc	M2035A	13	east	1*			✓	DB				
2FWA-BV-0038	BFP 1B Recirc	M2035A	13		1*			✓	DB				
3 5 9 11													
2TEF-BV-0003 1	DA cont vents to atmos	M2078A	14	top of DA	2				DB				
2TEF-BV-0007 7	DA cont vents to atmos	M2078A	14	top of DA	2								
2TEF-BV-00011 13	DA cont vents to atmos	M2078A	14	top of DA	2								
open 1,7-13													
2SGF-BV-0041	Sec SH Outlet Header	M2068	15	west	3				DB				
2SGF-BV-0043	Sec SH Intermed Header	M2068	15	west	3				DB				
2SGF-BV-0045	Sec SH Intermed Header	M2068	15	west	3				DB				
2SGF-BV-0049	Sec SH Platen Inlet Header	M2068	15	west	3				DB				
2SGF-BV-0051	Roof Inlet Header	M2068	15	west	3				DB				
2PSA-BV-0021	Aux Pegging Stm to Deaerator	M2008	15	N of east elevator	1*			✓	DB				
2PSA-BV-0022	Aux Pegging Stm to Deaerator	M2008	15	N of east elevator	1*								
open check if leaking													
2PSA-BV-0058	SSH to Aux Stm	M2008	17	west side	2				DB				
2SGA-BV-0010	MStm Supply to Aux Stm Header	M2063A	17	west side	2			✓					
2SGA-BV-0195	Steam Trap 2	M2063A	16	west	2			✓	DB				
steam pegging - leak													
2SGA-BV-0199	Steam Trap 3	M2063B	18	S side of drum				✓	DB				
2SGA-BV-0003	Cont Blowdown	M2063B	18	E end of the drum	2			✓	DB				
2SGA-MBV-0004	Cont Blowdown	M2063B	18	E end of the drum	2			✓	DB				
2SGA-MBV-0002	Stm Supply to Aux Stm	M2063B	18	S end of the drum	2			✓	DB				

left open

IP7016615

2SGA-BV-0001	Stm Supply to Aux Stm	M2063B	18	S end of the drum	2				DB				

IP7016616

TURBINE CYCLE PERFORMANCE TESTING

***** CYCLE ISOLATION CHECKOFF SHEETS *****

IGS Unit # 2 | Test # | Date: 4-8-02 | Time: 20:30 | Name: Russ W.

Russel Carlson

VALVE CLASSIFICATION: ** CRITICAL VALVE LIST**

Class 1*- **CRITICAL VALVES-** valves which are required to be opened immediately due to operational upset or unit trip

Class 1- Open valves just prior to test and standby, valves need to be opened at the end of each test

Class 2- Close valves up to 2 hours prior to each test (before Class I valves), re-open valves after Class I valves

Class 3- Close valves at the beginning of the day and open at the end of the day

Class NC- Non-Critical Valves- verify normally closed valves are closed (and not leaking) and normally opened valves are open

VALVE NUMBER	DESCRIPTION	P&ID	Floor	Location	CLASS	VALVE POSITION Normal	VALVE POSITION Test	CHECKOFF with Initials Open	CHECKOFF with Initials Close	CHECKOFF with Initials Open	CHECKOFF with Initials Close	Downstream Temp (F)	NOTES:
2SAC-BV-0017	Sample 1 Makeup to Cond ✓	M2054A	1	Water Lab	2								
2SAC-BV-0030	Sample 1 Makeup to Cond ✓	M2054A	1	Water Lab	2								
2SAC-BV-0019	Sample 3 Demin 1A Outlet	M2054A	1	Water Lab	2								
2SAC-BV-0032	Sample 3 Demin 1A Outlet	M2054A	1	Water Lab	2								
2SAC-BV-0020	Sample 4 Demin 1B Outlet	M2054A	1	Water Lab	2								
2SAC-BV-0033	Sample 4 Demin 1B Outlet	M2054A	1	Water Lab	2								
2SAC-BV-0021	Sample 5 Demin 1C Outlet	M2054A	1	Water Lab	2								
2SAC-BV-0034	Sample 5 Demin 1C Outlet	M2054A	1	Water Lab	2								
2SAC-BV-0022	Sample 6 Demin 1D Outlet	M2054A	1	Water Lab	2								
2SAC-BV-0035	Sample 6 Demin 1D Outlet	M2054A	1	Water Lab	2								
2SAC-BV-0023	Sample 7 Cond Polisher Outlet	M2054A	1	Water Lab	2								
2SAC-BV-0036	Sample 7 Cond Polisher Outlet	M2054A	1	Water Lab	2								
2SAC-BV-0001	Smpl 8 Cond after Gland Cond ✓	M2054A	1	Water Lab	2			✓					
2SAC-BV-0002	Sample 9 DA Inlet ✓	M2054A	1	Water Lab	2			✓					
2SAC-BV-0024	Sample 9 DA Inlet ✓	M2054A	1	Water Lab	2			✓					
2SAC-BV-0037	Sample 9 DA Inlet ✓	M2054A	1	Water Lab	2			✓					
2SAC-BV-0026	Sample 11 Econ Inlet ✓	M2054A	1	Water Lab	2			✓					
2SAC-BV-0039	Sample 11 Econ Inlet ✓	M2054A	1	Water Lab	2			✓					
2SAC-BV-0003	Sample 13 Satuated Steam	M2054A	1	Water Lab	2			✓					
2SAC-BV-0004	Sample 14 Main Steam	M2054A	1	Water Lab	2								
2SAC-BV-0028	Sample 14 Main Steam	M2054A	1	Water Lab	2								
2SAC-BV-0041	Sample 14 Main Steam ✓	M2054A	1	Water Lab	2								
							13 + 14	✓	etc				

No Flow Pol. off

ISOLATED ON TREE by Inside Rounds office BV's 13 + 14

Test 2

Sample 2 150 ml/min + 50 ml/min + 50 ml/min + 1 l/1 min 16.14 sec

Sample 10 1 l/49.56 sec + 1 l/1 min 12.87 sec

Sample 12 300 ml/min + 1 l/1 min 2.53 sec HOTWELL DA DRUM } Still have flow from sample lines measure -

Test 1

total

200 ml/min + measure

Sample 2 150 ml/min + 1 l/1 min 16.07 sec

Sample 10 1 l/52.74 sec + 1 l/1 min 12.87 sec + 100 ml/min

Sample 12 250 ml/min + 25 ml/min + 125 ml/min + 1 l/1 min 6.13 sec

total 350 ml/min

IP7016617

TURBINE CYCLE PERFORMANCE TESTING | IGS Unit # 2 | Test # 1

*** CYCLE ISOLATION CHECKOFF SHEETS *** | Date: 4/8/02 | Time: 10— | Name: DS.

VALVE CLASSIFICATION:

Class I*- **CRITICAL VALVES-** valves which are required to be opened immediately due to operational upset or unit trip

Class I- **Open valves just prior to test and standby, valves need to be opened at the end of each test**

Class II- **Close valves up to 2 hours prior to each test (before Class I valves), re-open valves after Class I valves**

Class III- **Close valves at the beginning of the day and open at the end of the day**

Class IV- **Non-Critical Valves- verify normally closed valves are closed (and not leaking) and normally opened valves are open**

√= Ok drain cool

LOCATION: CONDENSER CONNECTIONS- EAST BASEMENT

VALVE NUMBER	DESCRIPTION	P&ID	LOCATION Floor	Near	Area	Termintaion Point	CLASS	VALVE POSITION Normal	Test	CHECKOFF Initials		Downstream Temp (F)	NOTES:
~~TGC~~-BV-65	Drain from TDV to Htr TRR	M2080A	2	ss-plat	Diag A #1	Cond TB end bsmt		op				185 F	Close during test
~~TGC~~-BV-67	Drain from TDV to Htr	M2080A	2	ss-plat	Diag A #1	Cond TB end bsmt		CL				" F	
~~FW~~A-MBV-189	Wrmup Drain from FW to Htr 6	M2035A	2		Diag A #2	Cond TB end bsmt		CL				✓ F	
~~TGC~~-MBV-31	RHT bowl drain to cond	M2080B	1	s-ehc	Diag A #3	Cond TB end bsmt		CL				~~[illegible]~~ ✓ F	~~ISO BV 64~~
TGC-MBV-37	Control Valve drain to cond.	M2080B	2	convlvs	Diag A #4	Cond TB end bsmt						✓ F	
TGC-MBV-39	Control Valve drain to cond.	M2080B	2	convlvs	Diag A #5	Cond TB end bsmt						✓ F	
TGC-MBV-40	Control Valve drain to cond.	M2080B	2	convlvs	Diag A #6	Cond TB end bsmt						✓ F	
~~TGC~~-MBV-33	Stop Valve drain to cond	M2080B	2	stpvlvs	Diag A #7	Cond TB end bsmt		CL				✓ F	
~~TGC~~-MBV-34	Stop Valve drain to cond	M2080B	2	stpvlvs	Diag A #8	Cond TB end bsmt		CL				✓ F	
~~TGC~~-MBV-36	Stop Valve drain to cond	M2080B	2	stpvlvs	Diag A #9	Cond TB end bsmt		CL				✓ F	
~~TGC~~-MBV-35	Stop Valve drain to cond	M2080B	2	stpvlvs	Diag A #10	Cond TB end bsmt		CL				✓ F	
~~TGC~~-MBV-32	RHT bowl drain to cond	M2080B	1	s-ehc	Diag A #11	Cond TB end bsmt		CL	CBV64 DS			232 F	ISO BV 64 *
SGJ-MBV-18	CRH low point drains	M2071	1	s-ehc	Diag A #12	Cond TB end bsmt						✓ F	
SGJ-MBV-14	HRH low point drains	M2071	1	s-ehc	Diag A #13	Cond TB end bsmt						✓ F	
SGJ-MBV-16	HRH low point drains	M2071	1	s-ehc	Diag A #13	Cond TB end bsmt						✓ F	
SGG-MBV-25	MS Byp to cond low pt drain	M2069	2	ne-cond	Diag A #14	Cond TB end bsmt						✓ F	
TGC-MBV-38	Control Valve drain to cond	M2080B	2	convlvs	Diag A #15	Cond TB end bsmt						✓ F	
TGC-MBV-49	MS lead drain to cond	M2080	1	sw-ehc	Diag A #16	Cond TB end bsmt						✓ F	
~~TGC~~-ACV-4	TDV to cond	M2080A	2.5	stmslplt	Diag A #17	Cond TB end bsmt		C	C			~~392~~ F	no way to iso
TGA-ABV-20	Equalizer valve	M2079	2		Diag A #18	Cond TB end bsmt						✓ F	
TED-ACV-11	Htr 6A hi level dump	M2076	1	e-cond	Diag A #20	Cond TB end bsmt						✓ F	
TED-ACV-12	Htr 6B hi level dump	M2076	1	e-cond	Diag A #21	Cond TB end bsmt						✓ F	
TED-ACV-3	Htr 8A hi level dump	M2076	1	e-cond	Diag A #22	Cond TB end bsmt						✓ F	
TED-ACV-4	Htr 8B hi level dump	M2076	1	e-cond	Diag A#24	Cond TB end bsmt						120 F	
TED-ACV-8	Htr 7B hi level dump	M2076	1	e-cond	Diag A#25	Cond TB end bsmt						✓ F	
TGC-ORF-8	SSH low point drain	M2080A	1		Diag A#26	Cond TB end bsmt						✓ F	
TED-ACV-7	Htr 7A hi level dump	M2076	1	e-cond	Diag A#27	Cond TB end bsmt						✓ F	
TEC-ACV-146	Drn frm LPextr stm to BFPT A	M2075	1	e-cond	Diag A#28	Cond TB end bsmt						152 F	

LOCATION: HP DRAIN HEADER

VALVE NUMBER	DESCRIPTION	P&ID	LOCATION Floor	Near	Area	Termintaion Point	CLASS	VALVE POSITION Normal	Test	CHECKOFF Initials		Downstream Temp (F)	NOTES:
SGI-MBV-178	Air heater sootblowers drain	M2070	1	E-EHC	DiagB1#1	HP Drain Header						— F	
SGI-MBV-35	Boiler sootblowers drain	M2070	1	E-EHC	DiagB1#2	HP Drain Header						— F	
TEC-ACV-14	4th stg extr (drain) to HTR 8A & 8	M2075	1	E-EHC	DiagB1#3	HP Drain Header						500 F	ISO BV 75

IP7016618

TEC-ACV-80	4th stg extr (drain) to HTR 8A	M2075	1	E-EHC	DiagB1#4	HP Drain Header						500 F	ISO BV 81
TEC-ACV-140	14th stg extr (drain) to BFPT 1B	M2075	1	E-EHC	DiagB1#5	HP Drain Header						134 F	
TEC-ACV-128	14th stg extr (drain) to DA	M2075	1	E-EHC	DiagB1#6	HP Drain Header						231 F	—
TEC-ACV-116	14th stg extr (drain) to DA	M2075	1	E-EHC	DiagB1#7	HP Drain Header						256 F	
TEC-ACV-86	4th stg extr (drain) to HTR 8B	M2075	1	E-EHC	DiagB1#8	HP Drain Header						✓ F	
TEC-ACV-92	11th stg extr (drain) to HTR 6A&B	M2075	1	E-EHC	DiagB1#9	HP Drain Header						430 F	ISO BV 93
TEC-ACV-98	11th stg extr (drain) to HTR 6A	M2075	1	E-EHC	DiagB1#10	HP Drain Header						280 F	
TEC-ACV-101	11th stg extr (drain) to HTR 6B	M2075	1	E-EHC	DiagB1#11	HP Drain Header						117 F	
TEC-ACV-134	14th stg extr (drain) to BFPT 1A	M2075	1	E-EHC	DiagB1#12	HP Drain Header						✓ F	
TEC-ACV-122	14th stg extr (drain) to BFPT 1A&	M2075	1	E-EHC	DiagB1#13	HP Drain Header						176 F	
TEC-ACV-110	14th stg extr (drain) to DA	M2075	1	E-EHC	DiagB1#14	HP Drain Header						✓ F	
PSA-ORF-1	Aux Stm Hdr orificed drain line	M2008	1	S-EHC	DiagB1#15	HP Drain Header						230 F	—

LOCATION: LP DRAIN HEADER

			LOCATION					VALVE POSITION		CHECKOFF		Downstream	
VALVE NUMBER	DESCRIPTION	P&ID	Floor	Near	Area	Termintaion Point	CLASS	Normal	Test	Initials		Temp (F)	NOTES:
TEC-ACV-2	HTR 2 extr from A hood (drain)	M2075	1	ne-cond	DiagB2#1	LP Drain Header						F	
TEC-ACV-6	HTR 2 extr from A hood (drain)	M2075	1	ne-cond	DiagB2#2	LP Drain Header						F	
TEC-ACV-10	HTR 3 extr from A hood (drain)	M2075	1	ne-cond	DiagB2#3	LP Drain Header						F	
TEC-ACV-14	HTR 3 extr from A hood (drain)	M2075	1	ne-cond	DiagB2#4	LP Drain Header						F	
TEC-ACV-18	HTR 4 extr from A hood (drain)	M2075	1	ne-cond	DiagB2#5	LP Drain Header						F	
TEC-ACV-22	HTR 4 extr from A hood (drain)	M2075	1	ne-cond	DiagB2#6	LP Drain Header						F	
TEC-ACV-50	Extr to HTR 2 from C hood drain	M2075	1	nw-cond	DiagB3#1	LP Drain Header						F	

IP70166 19

TEC-ACV-54	Extr to HTR 2 from C hood drain	M2075	1	nw-cond	DiagB3#2	LP Drain Header						F	
TEC-ACV-58	Extr to HTR3 from C hood drain	M2075	1	nw-cond	DiagB3#3	LP Drain Header						F	
TEC-ACV-62	Extr to HTR3 from C hood drain	M2075	1	nw-cond	DiagB3#4	LP Drain Header						F	
TEC-ACV-66	Extr to HTR 4 from C hood drain	M2075	1	nw-cond	DiagB3#5	LP Drain Header						F	
TEC-ACV-70	Extr to HTR 4 from C hood drain	M2075	1	nw-cond	DiagB3#6	LP Drain Header						F	
TEC-ACV-26	Extr to HTR 2 from B hood drain	M2075	1	nw-cond	DiagB3#7	LP Drain Header						F	
TEC-ACV-30	Extr to HTR 2 from B hood drain	M2075	1	nw-cond	DiagB3#8	LP Drain Header						F	
TEC-ACV-34	Extr to HTR 3 from B hood drain	M2075	1	nw-cond	DiagB3#9	LP Drain Header						F	
TEC-ACV-38	Extr to HTR 3 from B hood drain	M2075	1	nw-cond	DiagB3#10	LP Drain Header						F	
TEC-ACV-42	Extr to HTR 4 from B hood drain	M2075	1	nw-cond	DiagB3#11	LP Drain Header						F	
TEC-ACV-46	Extr to HTR 4 from B hood drain	M2075	1	nw-cond	DiagB3#12	LP Drain Header						F	

LOCATION: CONDENSER CONNECTIONS-NORTH MEZZANINE

			LOCATION					VALVE POSITION		CHECKOFF		Downstream	
VALVE NUMBER	DESCRIPTION	P&ID	Floor	Near	Area	Termintaion Point	CLASS	Normal	Test	Initials		Temp (F)	NOTES:
FWA-ABV-303	BFPT "A" HP Stop Vlv Drain ✓	M2035C	2	N-cond	Diag C #6	dwncmr drns hdr		C	C			179 F	
FWA-ABV-309	BFPT"A"LP stp vlv below stdr ✓	M2035C	2	N-cond	Diag C #7	Cond-A NorthMez		C	C			✓ F	
FWA-ABV-305	BFPT"A" HP Stop Valve Drain ✓	M2035C	2	N-cond	Diag C #8	Cond-A NorthMez		C	C			571 F	- Orifice ISO BV
FWA-ABV-311	BFPT"A" First Stage Drain ✓	M2035C	2	ne-cnd	Diag C #9	Cond-A NorthMez		C	C			✓ F	
TEF-BV-162	HTR 4 Vent to Condenser	M2078B	5	HTR4	Diag C #10	Cond-North Mezz						✓ F	
TEF-BV-163	HTR 3 Vent to Condenser	M2078B	3	HTR3	Diag C #11	Cond-North Mezz						✓ F	
TEF-BV-164	HTR 2 Vent to Condenser	M2078B	2	HTR2	Diag C #12	Cond-North Mezz						✓ F	
FWA-ABV-312	BFPT"B" First Stage Drain	M2035C	2	nw-cnd	Diag C #13	Cond-C NorthMez		C	C			✓ F	
FWA-ABV-306	BFPT"B" HP Stop Valve Drain	M2035C	2	N-cond	Diag C #14	Cond-C NorthMez		C	C			367 F	ISO BV ?
FWA-ABV-310	BFPT"B"LP stpvlv below st dr	M2035C	2	N-cond	Diag C #15	Cond-C NorthMez		C	C			✓ F	
FWA-ABV-304	BFPT"B" HP Stop Valve Drain	M2035C	2	N-cond	Diag C #16	dwncmr drns hdr		C	C			✓ F	

LOCATION: CONDENSER CONNECTIONS-NORTH BASEMENT (check on mezzanine level)

			LOCATION					VALVE POSITION		CHECKOFF		Downstream	
VALVE NUMBER	DESCRIPTION	P&ID	Floor	Near	Area	Termintaion Point	CLASS	Normal	Test	Initials		Temp (F)	NOTES:
TGC-ORF-11	Steam Seal Hdr Low Point Drain	M2080A	2	N-cond	A-cond	Cond-A North Basemt						373 F	Orifice - should be hot
FWA-ABV-307	BFPT 1A Stpvlv above seat drn	M2035C	2	N-cond	A-cond	Cond-A North Basemt						✓ F	
FWA-ABV-308	BFPT 1B Stpvlv above seat drn	M2035C	2	N-cond	C-cond	Cond-C North Basemt						✓ F	

IP70166620

LOCATION: WEST SIDE BOILER DRAINS

VALVE NUMBER	DESCRIPTION	P&ID	LOCATION Floor	Near	Area	Termintaion Point	CLASS	VALVE POSITION Normal	Test	CHECKOFF Initials		Downstream Temp (F)	NOTES:
SGF-MBV-52	Roof Inlet header drain	M2068	4	fdr dck	west boiler	W boil drn bldwn hdr						✓ F	
SGF-MBV-50	Sec SH Platen inlet drain header	M2068	4	fdr dck	west boiler	W boil drn bldwn hdr						✓ F	
SGF-BV-48	Economizer discharge header drn	M2068	4	fdr dck	west boiler	W boil drn bldwn hdr						✓ F	
SGF-MBV-46	Sec SH Intermediate inlet hdr drain	M2068	4	fdr dck	west boiler	W boil drn bldwn hdr						✓ F	
SGF-MBV-44	Sec SH Intermediate inlet hdr drain	M2068	4	fdr dck	west boiler	W boil drn bldwn hdr						✓ F	
PSA-TRP-16	Aux stm from drum and SSH stm t	M2008	14	S-boiler	south boiler	RH outlet bldwn hdr						✓ F	
SGA-TRP-02	Main stm to Aux stm hdr drain trap	M2063A	16	Wboiler	west boiler	Mn Stm drip pkt drn						✓ F	
SGF-BV-40	Reheater outlet header drain	M2068	4	fdr dck	west boiler	RH outlet hdr bldwn						✓ F	
SGF-BV-38	Reheater outlet header drain	M2068	4	fdr dck	west boiler	RH outlet hdr bldwn						✓ F	
SGF-MBV-36	Lower convect pass hdr drain	M2068	4	fdr dck	west boiler	W boil drn bldwn hdr						✓ F	
SGF-BV-34	Reheater inlet header drain	M2068	4	fdr dck	west boiler	W boil drn bldwn hdr						✓ F	
SGF-BV-31	Economizer inlet header drain	M2068	4	fdr dck	west boiler	W boil drn bldwn hdr						✓ F	
SGA-BV-19	Drum level gage drain	M2063B	18	W-Drum	west boiler	W boil drn bldwn hdr						✓ F	
SGA-BV-26	Drum level gage drain	M2063B	18	W-Drum	west boiler	W boil drn bldwn hdr						✓ F	
SGF-MBV-29	Lower convect pass hdr drain	M2068	4	fdr dck	west boiler	W boil drn bldwn hdr						✓ F	
SGF-MBV-42	Sec SH outlet header drain	M2068	4	fdr dck	west boiler	Blowdown Tank 1						✓ F	
SGA-BV-32	Drum steam pressure gage drain	M2063B	18	W-Drum	west boiler	W boil drn bldwn hdr						✓ F	

LOCATION: EAST SIDE BOILER DRAINS

VALVE NUMBER	DESCRIPTION	P&ID	LOCATION Floor	Near	Area	Termintaion Point	CLASS	VALVE POSITION Normal	Test	CHECKOFF Initials		Downstream Temp (F)	NOTES:
SGA-TRP-03	Drum to Aux stm drain stm trp	M2063B	18	S-boiler	east boiler	E boil drn bldwn hdr						F	
SGF-BV-54	Economizer discharge header drn	M2068	4	sub-fdr	east boiler	E boil drn bldwn hdr						✓ F	
SGF-MBV-56	Lower convect pass hdr drain	M2068	4	sub-fdr	east boiler	E boil drn bldwn hdr						✓ F	
SGF-MBV-58	Lower convect pass hdr drain	M2068	4	sub-fdr	east boiler	E boil drn bldwn hdr						✓ F	
SGA-MBV-4	Drum continuous blowdown	M2068	18	E-drum	east boiler	E boil drn bldwn hdr						430 F	??
PSA-TRP-01	Cold Reheat Aux Steam Supply	M2008	08	SE-boil	east elev	E boil drn bldwn hdr						F	

LOCATION: MAIN STEAM DRIP POCKET

VALVE NUMBER	DESCRIPTION	P&ID	LOCATION Floor	Near	Area	Termintaion Point	CLASS	VALVE POSITION Normal	Test	CHECKOFF Initials		Downstream Temp (F)	NOTES:
SGG-MBV-11 ✓	Main Steam to Blowdown Tank	M2069	2	SE-boil	NE-SV&CV	Blowdown Tank		C	C			276 F	hand tight
SGG-MBV-12 ✓	Main Steam to Blowdown Tank	M2069	2	SE-boil	NE-SV&CV	Blowdown Tank		C	C			276 F	"
SGG-MBV-13 ✓	Main Steam to Blowdown Tank	M2069	2	SE-boil	NE-SV&CV	Blowdown Tank		C	C			151 F	
SGG-MBV-14 ✓	Main Steam to Blowdown Tank	M2069	2	SE-boil	NE-SV&CV	Blowdown Tank		C	C			151 F	

LOCATION: DOWNCOMER DRAINS

VALVE NUMBER	DESCRIPTION	P&ID	LOCATION Floor	Near	Area	Termintaion Point	CLASS	VALVE POSITION Normal	Test	CHECKOFF Initials		Downstream Temp (F)	NOTES:
SGF-BV-59	Drum West End Downcomer	M2068	2	S-boiler	N of Htr 2	DwncmDrnBldnHdr						✓ F	
SGF-BV-60	Drum West End Downcomer	M2068	2	S-boiler	N of Htr 2	DwncmDrnBldnHdr						✓ F	
SGF-BV-61	Drum West Shell Downcomer	M2068	2	S-boiler	N of Htr 2	DwncmDrnBldnHdr		C	C			✓ F	

IP7016621

0126 Before valves
• INAPF 126 A After valves
123A Calc Inlet T

SGF-BV-62	Drum West Shell Downcomer	M2068	2	S-boiler	N of Htr 2	DwncmDrnBldnHdr		C	C			✓ F	
SGF-MBV-66	Downcomer Drain Manifold Drain	M2068	2	S-boiler	N of Htr 2	DwncmDrnBldnHdr		C	C			✓ F	
SGF-BV-63	Drum Center Shell Downcomer	M2068	2	S-boiler	N of Htr 2	DwncmDrnBldnHdr		C	C			✓ F	
SGF-BV-64	Drum Center Shell Downcomer	M2068	2	S-boiler	N of Htr 2	DwncmDrnBldnHdr		C	C			✓ F	
SGF-BV-67	Drum East Shell Downcomer	M2068	2	S-boiler	N of Htr 2	DwncmDrnBldnHdr		C	C			✓ F	
SGF-BV-68	Drum East Shell Downcomer	M2068	2	S-boiler	N of Htr 2	DwncmDrnBldnHdr		C	C			✓ F	
SGF-BV-69	Drum East End Downcomer	M2068	2	S-boiler	N of Htr 2	DwncmDrnBldnHdr						✓ F	Above pulu
SGF-BV-70	Drum East End Downcomer	M2068	2	S-boiler	N of Htr 2	DwncmDrnBldnHdr						✓ F	"

LOCATION: SUPERHEAT BYPASS

VALVE NUMBER	DESCRIPTION	P&ID	LOCATION Floor	Near	Area	Termintaion Point	CLASS	VALVE POSITION Normal	Test	CHECKOFF Initials		Downstream Temp (F)	NOTES:
SGA-TRP-1	Superheat Bypass Drain Trap	M2063A	12	NW-boil	NW corner	Partial Byp Drn Cnd						— F	
SGA-ACV-137	Superheat Bypass ✓	M2063A	2	W-Cond	NW corner	C Condenser-West		C	C			131 F	150 BV 169 ? 136 ?
									Bypass cnt.				

LOCATION: MISCELLANEOUS VALVES

VALVE NUMBER	DESCRIPTION	P&ID	LOCATION Floor	Near	Area	Termintaion Point	CLASS	VALVE POSITION Normal	Test	CHECKOFF Initials		Downstream Temp (F)	NOTES:
FWA-BV-299	Bootstrap Valve ✓	M2035A	2	SW-boil	SW Htr 2			C	C			✓ F	
FWC-ACV-28	DEA Recirc } ACV 87	M2037	2	W-Cond	NW corner	C Condenser-West		C	C			✓ F	
TEC-ACV-152	1B BFPT Extraction Drain ✓	M2075	2	W-Cond	NW corner	Cond-Basement		C	C			166 F	

LOCATION: VACUUM PUMPS

VALVE NUMBER	DESCRIPTION	P&ID	LOCATION Floor	Near	Area	Termintaion Point	CLASS	VALVE POSITION Normal	Test	CHECKOFF Initials		Downstream Temp (F)	NOTES:
HRB-P-1A	1A Vacuum Pump	M2021	2	SE-Boil	East Elevtr							7 F	
HRB-P-1B	1B Vacuum Pump	M2021	2	SE-Boil	East Elevtr							5 F	
HRB-P-1C	1C Vacuum Pump	M2021	2	SE-Boil	East Elevtr							7 F	
HRB-P-1D	1D Vacuum Pump	M2021	2	SE-Boil	East Elevtr							F	

LOCATION:

VALVE NUMBER	DESCRIPTION	P&ID	LOCATION Floor	Near	Area	Termintaion Point	CLASS	VALVE POSITION Normal	Test	CHECKOFF Initials		Downstream Temp (F)	NOTES:
TGA-ABV-2	Ventilator Valve	M2079	2	CV's	E A Cond	Atm - roof vents						140 F	
FWA-PS-70	~~BFP 1A~~ Inlet Strainer DP	M2035A	2	N-Cond	BFPT Exh							— F	
FWA-PS-71	~~BFP 1B~~ Inlet Strainer DP	M2035A	2	N-Cond	BFPT Exh							— F	
SGI-ABV-21	AH Soot Blower Drain	M2070	3	NE-Boil	Stairs	Cond						F	
SGI-ABV-22	AH Soot Blower Drain	M2070	3	NW-Boil	Stairs	Cond						F	
SGI-ABV-170	Boiler Soot Blower Drain	M2070	7	W-Boil		Cond						F	
SGI-ABV-171	Boiler Soot Blower Drain	M2070	7	E-Boil		Cond						F	
SGI-ABV-172	Boiler Soot Blower Drain	M2070	11	E-Boil	Backpass	Cond						F	
SGI-ABV-173	Boiler Soot Blower Drain	M2070	11	W-Boil	Backpass	Cond						F	
SGA-MBV-173	Economizer Recirc	M2063A	10.5	W-Boil	Backpass	Economizer inlet						— F	
SGA-MBV-174	Economizer Recirc	M2063A	10.5	E-Boil	Backpass	Economizer inlet						— F	

IP7016622

SGG-MCV-18	Main Steam Warming Line	✓	M2069	2	E-CV'S		Cond		Cu				✓ F	
SGG-MBV-25	Main Steam Line Drain	✓	M2069	2	E-CV'S		Cond		Cu				✓ F	
SGG-MBV-26	Main Steam Line Drain	✓	M2069	2	E-CV'S		Cond		Cu				✓ F	
SGG-MBV-55	Main Steam to BFPT Drain	✓	M2069	2	E-CV'S		Cond		Cu				✓ F	
SGG-MBV-56	Main Steam to BFPT Drain	✓	M2069	2	E-CV'S		Cond		Cu				✓ F	
PSA-ACV-60	Drum Aux Steam Supply		M2008	17	S-Boil		Aux						300 F	Both iso
PSA-ACV-57	SSH Aux Steam Supply		M2008	17	W-Boil		Aux						300 F	

IP7016623

Day 1-Test 2 YWO/2000

IP7016624

Fred T
~~Steve Kelly~~
John Pruitt

TURBINE CYCLE PERFORMANCE TESTING | IGS Unit # 2 | Test # ____

***** CYCLE ISOLATION CHECKOFF SHEETS ***** | Date: 4-11-02 | Time: ____ | Name: [redacted]

VALVE CLASSIFICATION: ** CRITICAL VALVE LIST**

Class 1*- **CRITICAL VALVES-** valves which are required to be opened immediately due to operational upset or unit trip

Class 1- „ **Open valves just prior to test and standby, valves need to be opened at the end of each test**

Class 2- **Close valves up to 2 hours prior to each test (before Class I valves), re-open valves after Class I valves**

Class 3- **Close valves at the beginning of the day and open at the end of the day**

Class NC- **Non-Critical Valves- verify normally closed valves are closed (and not leaking) and normally opened valves are open**

						VALVE POSITION		CHECKOFF with Initials				Downstream	
VALVE NUMBER	DESCRIPTION	P&ID	Floor	Location	CLASS	Normal	Test	Open	Close	Open	Close	Temp (F)	NOTES:
~~2TED-BV-0019~~	HP Heater 8A Alternate Drain	M2076	1	East of condenser	1*	open	close						
~~2TED-BV-0020~~	HP Heater 8A Alternate Drain	M2076	1	East of condenser	1*	open	close						
~~2TED-BV-0027~~	HP Heater 7A Alternate Drain	M2076	1	East of condenser	1*	open	close						
~~2TED-BV-0028~~	HP Heater 7A Alternate Drain	M2076	1	East of condenser	1*	open	close						
~~2TED-BV-0035~~	HP Heater 6A Alternate Drain	M2076	1	East of condenser	1*	open	close						
~~2TED-BV-0036~~	HP Heater 6A Alternate Drain	M2076	1	East of condenser	1*	open	close						
~~2TED-BV-0021~~	HP Heater 8B Alternate Drain	M2076	1	East of condenser	1*	open	close						
~~2TED-BV-0022~~ *	HP Heater 8B Alternate Drain	M2076	1	East of condenser	1*	open	close	✓	✓				
~~2TED-BV-0029~~	HP Heater 7B Alternate Drain	M2076	1	East of condenser	1*	open	close						
~~2TED-BV-0030~~	HP Heater 7B Alternate Drain	M2076	1	East of condenser	1*	open	close						
~~2TED-BV-0037~~	HP Heater 6B Alternate Drain	M2076	1	East of condenser	1*	open	close						
~~2TED-BV-0038~~	HP Heater 6B Alternate Drain	M2076	1	East of condenser	1*	open	close						
2TEC-BV-0073	HP Htrs 8A & 8B- extr drain	M2075	1	E of Lube Oil Centrifuge	2	open	close ✓	✓	✓				
2TEC-BV-0075	HP Heaters 8A and 8B Extr Drain	M2075	1	E of Lube Oil Centrifuge	2	open	close ✓	✓	✓				
2TEC-BV-0079	HP Htrs 8A- extr drain	M2075	1	E of Lube Oil Centrifuge	2	open	close ✓	✓	✓				
2TEC-BV-0085	HP Heater 8B Extr Drain	M2075	1	E of Lube Oil Centrifuge	2	open	close ✓	✓	✓				
2TEC-BV-0081 82	HP Drain Header- stm trap isolation	M2075	1	E EHC skid	2	open	close ✓	✓	✓				
2TEC-BV-0093	HP Heater 8B Extr Drain	M2075	1	E EHC skid	2	open	close *	✓ RW					
2TEC-BV-0065	LP Heater 4 Extr Drain	M2075	1	NW corner C Cond ceiling	1	open	close	✓ RW					
2SGJ-BV-0056	Cold Reheat Stm Trap- Inlet	M2071	1	204-B	1	open	close	✓					
2SGJ-BV-0057	Cold Reheat Stm Trap- Outlet	M2071	1	204-B	1	open	close ✓	✓	✓				
2TEC-BV-0027	LP Heater 2 Extr Drain	M2075	1	NW corner of cond	3	open	close	✓					
2TEC-BV-0031	LP Heater 2 Extr Drain	M2075	1	bottom row	3	open	close	✓	FT				
2TEC-BV-0035	LP Heater 3 Extr Drain	M2075	1	"	3	open	close	✓					
2TEC-BV-0039	LP Heater 3 Extr Drain	M2075	1	"	3	open	close	✓					
2TEC-BV-0043	LP Heater 4 Extr Drain	M2075	1	"	3	open	close	✓					
2TEC-BV-0047	LP Heater 4 Extr Drain	M2075	1	"	3	open	close	✓					
2TEC-BV-0003	LP Heater 2 Extr Drain	M2075	1	NE corner of cond	3	open	close	✓					
2TEC-BV-0007	LP Heater 2 Extr Drain	M2075	1	"	3	open	close	✓	RW				
2TEC-BV-0011	LP Heater 3 Extr Drain	M2075	1	"	3	open	close	✓					
2TEC-BV-0015	LP Heater 3 Extr Drain	M2075	1	"	3	open	close	✓					
2TEC-BV-0019	LP Heater 4 Extr Drain	M2075	1	"	3	open	close	✓					
2TEC-BV-0023	LP Heater 4 Extr Drain	M2075	1	"	3	open	close	✓					
2TEC-BV-0051	LP Heater 2 Extr Drain	M2075	1	NW corner of cond	3	open	close	✓					
2TEC-BV-0055	LP Heater 2 Extr Drain	M2075	1	top row	3	open	close	✓	RW				
2TEC-BV-0059	LP Heater 3 Extr Drain	M2075	1	"	3	open	close	✓					
2TEC-BV-0063	LP Heater 3 Extr Drain	M2075	1	"	3	open	close	✓					

IP7016625

2TEC-BV-0067	LP Heater 4 Extr Drain	M2075	1	"	3	open	close	✓ Pa					
2TEC-BV-0071	LP Heater 4 Extr Drain	M2075	1	"	3	open	close	✓ Pa					

IP70166626

TURBINE CYCLE PERFORMANCE TESTING

***** CYCLE ISOLATION CHECKOFF SHEETS *****

IGS Unit # 2 | Test # ____ | Date: 4-11-02 | Time: ____ | Name: Trevor Stevens

VALVE CLASSIFICATION: ** CRITICAL VALVE LIST**

Class 1*- CRITICAL VALVES- valves which are required to be opened immediately due to operational upset or unit trip

Class 1- Open valves just prior to test and standby, valves need to be opened at the end of each test

Class 2- Close valves up to 2 hours prior to each test (before Class I valves), re-open valves after Class I valves

Class 3- Close valves at the beginning of the day and open at the end of the day

Class NC- Non-Critical Valves- verify normally closed valves are closed (and not leaking) and normally opened valves are open

						VALVE POSITION		CHECKOFF with Initials				Downstream	
VALVE NUMBER	DESCRIPTION	P&ID	Floor	Location	CLASS	Normal	Test	Open	Close	Open	Close	Temp (F)	NOTES:
2HRA-BV-0019	Condensate Normal Drawoff	M2020	1	SW corner of condenser	1	open	close						
2HRA-BV-0020	Condensate Normal Drawoff	M2020	1	SW corner of condenser	1	open	close						
2HRA-BV-0023	Condensate Emerg Drawoff	M2020	1	SW corner of condenser	1	open	close						
~~2TEE-BV-0015~~	Flash Tank Altrn Drain to Cndr	M2077	1	southwest of condenser	1*	open	close						
~~2TEE-BV-0022~~	Flash Tank Altrn Drain to Cndr	M2077	1	southwest of condenser	1*	open	close						
~~2TEE-BV-0011~~	LP Htr 3 Altr HLvl Drain	M2077	1	west of condenser	1*	open	close						
~~2TEE-BV-0019~~	LP Htr 3 Altr HLvl Drain	M2077	1	west of condenser	1*	open	close						
~~2TEE-BV-0013~~	LP Htr 2 Altr HLvl Drain	M2077	1	west of condenser	1*	open	close						
~~2TEE-BV-0021~~	LP Htr 2 Altr HLvl Drain	M2077	1	west of condenser	1*	open	close						
~~2TEE-BV-0009~~	LP Htr 4 Altr HLvl Drain	M2077	2	west of condenser	1*	open	close						
~~2TEE-BV-0017~~	LP Htr 4 Altr HLvl Drain	M2077	2	west of condenser	1*	open	close						
2FWC-BV-0026	Deaerator Recirc to Cond	M2037	2	west of condenser	1								
2FWC-BV-0027	Deaerator Recirc to Cond	M2037	2	west of condenser	1								
2FWC-MBV-0090	Deaerator Recirc to Cond	M2037	2	west of condenser	1			from control room					
2PSA-BV-0082	Aux Stm- Orifice #1	M2008	1	south of EHC skid	2								
2FWD-BV-0121	Makeup to Regen Pumps	M2038B	1	Cond Polisher Regen Pumps	3								
2FWD-BV-0125	Makeup to Regen Pumps	M2038B	1	Cond Polisher Regen Pumps	3								
2HRA-BV-0030	Condensate Normal Makeup	M2020	2	southwest of condenser	1								
2HRA-BV-0031	Condensate Normal Makeup	M2020	2	southwest of condenser	1								
2HRA-BV-0032	Condensate Normal Makeup	M2020	2	southwest of condenser	1								
~~2TGC-BV-0010~~	Main Stm Supply to Turb Seals	M2080A	2	west of M Stm Header	1*			from control room					
blown packing/ backseated													
2FWA-BV-0388	HP Stop Valve 1B1 stem leakoff	M2035C	2	NW of Condenser	1								
2FWA-BV-0390	HP Stop Valve 1B1 seat drain	M2035C	2	NW of Condenser	1								
2FWA-BV-0391	HP Stop Valve 1A1 seat drain	M2035C	2	N of Condenser	1								
2SGJ-BV-0090	Cond to CRH Desuperhtr 2	M2071	2		1								
2HRB-BV-0109	Separator 1D Makeup Flow	M2021	2	Cond Vacuum Pump D	2								
2HRB-BV-0110	Separator 1C Makeup Flow	M2021	2	Cond Vacuum Pump C	2								
2HRB-BV-0111	Separator 1B Makeup Flow	M2021	2	Cond Vacuum Pump B	2								
2HRB-BV-0112	Separator 1A Makeup Flow	M2021	2	Cond Vacuum Pump A	2								
2TGC-BV-0058	Auxiliary Steam to Cold Reheat	M2080A	2	top of valve deck	1								

IP7016627

								open	close				
2SGG-BV-0058	Mn Stm Warming Line	M2069	2	NE of MCC 2A03	3			3D	3S				
2SGG-MBV-0009	Main Steam to BFPT 1A	M2069	3	NE of BFPT 1A	1*			DB	open				
2SGG-MBV-0010	Main Steam to BFPT 1B	M2069	3	SW of BFPT 1B	1*			DB	open				
key switch													
2TGA-BV-0003	Exhaust Hood Spray Supply	M2079	2	by feedwater heater	1				3S				
2TGA-BV-0004	Exhaust Hood Spray Supply	M2079	2	by feedwater heater	1			3D	3S				

IP70166628

TURBINE CYCLE PERFORMANCE TESTING | IGS Unit # 2 | Test # _____

***** CYCLE ISOLATION CHECKOFF SHEETS ***** | Date: 8-11-02 | Time: _____ | Name: Dan Bliss

VALVE CLASSIFICATION: ** CRITICAL VALVE LIST**

Class 1*- CRITICAL VALVES- valves which are required to be opened immediately due to operational upset or unit trip

Class 1- Open valves just prior to test and standby, valves need to be opened at the end of each test

Class 2- Close valves up to 2 hours prior to each test (before Class I valves), re-open valves after Class I valves

Class 3- Close valves at the beginning of the day and open at the end of the day

Class NC- Non-Critical Valves- verify normally closed valves are closed (and not leaking) and normally opened valves are open

						VALVE POSITION		CHECKOFF with Initials				Downstream	
VALVE NUMBER	DESCRIPTION	P&ID	Floor	Location	CLASS	Normal	Test	Open	Close	Open	Close	Temp (F)	NOTES:
2SGF-BV-0065	Downcomer Drain Blowdown Manifol	M2068	2	S side of boiler	2				DB				
2SGA-BV-0136	Superheat Bypass	M2063A	2	west end	2			✓	DB			leaking	
2SGA-BV-0169	Superheat Bypass	M2063A	2	west end	2			✓	DB			leaking	
2TGC-MBV-0032	Reheat Bowl Drain	M2080B	2	north of CRV	2				DB			leaking	
2TGC-MBV-0033	Reheat Bowl Drain	M2080B	2	north of CRV	2				DB			leaking	
2SGG-MBV-0011	M Stm to Blowdown Tank	M2069	2	east of vacuum pumps	2				DB			leaking	
2SGG-MBV-0012	M Stm to Blowdown Tank	M2070	2	east of vacuum pumps	2				DB			leaking	
2TEF-BV-0163	LP Htr 3 Cont Vent to Cond	M2078B	3	LP Htr 3	2			✓	DB				
2TEF-BV-0077	HP Htr 6A Cont Vent to DA	M2078A	3	HP Htr 6A	2			✓	DB				
2TEF-BV-0080	HP Htr 6B Cont Vent to DA	M2078A	3	HP Htr 6B	2			✓	DB				
2TEF-BV-0076	HP Htr 7A Cont Vent to DA	M2078A	5	HP Htr 7A	2			✓	DB				
2TEF-BV-0079	HP Htr 7B Cont Vent to DA	M2078A	5	HP Htr 7B	2			✓	DB				
2TEF-BV-0162	LP Htr 4 Cont Vent to Cond	M2078B	5	LP Htr 4	2			✓	DB				
2TEF-BV-0075	HP Htr 8A Cont Vent to DA	M2078A	6	HP Htr 8A	2			✓	DB				
2TEF-BV-0078	HP Htr 8B Cont Vent to DA	M2078A	6	HP Htr 8B	2			✓	DB				
2PSA-MBV-0017	Cold Reheat Supply to Aux Stm	M2008	9	behind east elevator	2			✓	DB				
2PSA-BV-0012	Cold Reheat Supply to Aux Stm	M2008	9	behind east elevator	2			✓	DB				
2PSA-BV-0014	Cold Reheat Supply to Aux Stm	M2008	9	behind east elevator	2			✓	DB				
2SGF-BV-0055	Lwr Conveyor Pass Header	M2068	10	east	3				DB				
2SGF-BV-0057	Lwr Conveyor Pass Header	M2068	10	east	3				DB				
2SGF-BV-0035	Lwr Conveyor Pass Header	M2068	10	west	3				DB				
2SGF-BV-0028	Lwr Conveyor Pass Header	M2068	10	west	3				DB				
2FWA-BV-0037	BFP 1A Recirc	M2035A	13	east	1*			✓	DB				
2FWA-BV-0038	BFP 1B Recirc	M2035A	13		1*			✓	DB				
2TEF-BV-0003	DA cont vents to atmos	M2078A	14	top of DA	2			✓	DB				
2TEF-BV-0005	DA cont vents to atmos	M2078A	14	top of DA	2			✓	DB				
2TEF-BV-0009	DA cont vents to atmos	M2078A	14	top of DA	2			✓	DB				
2TEF-BV-00011	DA cont vents to atmos	M2078A	14	top of DA	2			✓	DB				
left open - 1, 7 & 13													
2SGF-BV-0041	Sec SH Outlet Header	M2068	15	west	3				DB				

IP7016629

2SGF-BV-0043	Sec SH Intermed Header	M2068	15	west	3				DB				
2SGF-BV-0045	Sec SH Intermed Header	M2068	15	west	3				DB				
2SGF-BV-0049	Sec SH Platen Inlet Header	M2068	15	west	3				DB				
2SGF-BV-0051	Roof Inlet Header	M2068	15	west	3				DB				
2PSA-BV-0021	Aux Pegging Stm to Deaerator	M2008	15	N of east elevator	1*			✓	DB				
~~2PSA-BV-0022~~	Aux Pegging Stm to Deaerator	M2008	15	N of east elevator	1*			open					
2PSA-BV-0058	SSH to Aux Stm	M2008	17	west side	2			✓	DB				
~~2SGA-BV-0010~~	MStm Supply to Aux Stm Header	M2063A	17	west side	2			open	—				
2SGA-BV-0195	Steam Trap 2	M2063A	16	west side	2			✓	DB				
2SGA-BV-0199	Steam Trap 3	M2063B	18	so side of drum				✓	DB				
2SGA-BV-0003	Cont Blowdown	M2063B	18	E end of the drum	2			✓	DB				
2SGA-MBV-0004	Cont Blowdown	M2063B	18	E end of the drum	2				DB				
2SGA-MBV-0002	Stm Supply to Aux Stm	M2063B	18	S end of the drum	2				DB				
2SGA-BV-0001	Stm Supply to Aux Stm	M2063B	18	S end of the drum	2			✓	DB				
BV-62	Reheat sprays							✓	DB				
BV-63								✓	DB				

IP7016630

TURBINE CYCLE PERFORMANCE TESTING — IGS Unit # 2 — Test # _____

***** CYCLE ISOLATION CHECKOFF SHEETS ***** — Date: 4-11-02 — Time: _____ — Name: Russ

VALVE CLASSIFICATION: ** CRITICAL VALVE LIST**

Class 1*- CRITICAL VALVES- valves which are required to be opened immediately due to operational upset or unit trip

Class 1- Open valves just prior to test and standby, valves need to be opened at the end of each test

Class 2- Close valves up to 2 hours prior to each test (before Class I valves), re-open valves after Class I valves

Class 3- Close valves at the beginning of the day and open at the end of the day

Class NC- Non-Critical Valves- verify normally closed valves are closed (and not leaking) and normally opened valves are open

						VALVE POSITION		CHECKOFF with Initials				Downstream	
VALVE NUMBER	DESCRIPTION	P&ID	Floor	Location	CLASS	Normal	Test	Open	Close	Open	Close	Temp (F)	NOTES:
2SAC-BV-0017	Sample 1 Makeup to Cond	M2054A	1	Water Lab	2			RW	RW				
2SAC-BV-0030	Sample 1 Makeup to Cond	M2054A	1	Water Lab	2			RW	RW				
~~2SAC-BV-0019~~	Sample 3 Demin 1A Outlet	M2054A	1	Water Lab	2								
~~2SAC-BV-0032~~	Sample 3 Demin 1A Outlet	M2054A	1	Water Lab	2								
~~2SAC-BV-0020~~	Sample 4 Demin 1B Outlet	M2054A	1	Water Lab	2								
~~2SAC-BV-0033~~	Sample 4 Demin 1B Outlet	M2054A	1	Water Lab	2								
~~2SAC-BV-0021~~	Sample 5 Demin 1C Outlet	M2054A	1	Water Lab	2								
~~2SAC-BV-0034~~	Sample 5 Demin 1C Outlet	M2054A	1	Water Lab	2								
~~2SAC-BV-0022~~	Sample 6 Demin 1D Outlet	M2054A	1	Water Lab	2								
~~2SAC-BV-0035~~	Sample 6 Demin 1D Outlet	M2054A	1	Water Lab	2								
~~2SAC-BV-0023~~	Sample 7 Cond Polisher Outlet	M2054A	1	Water Lab	2								
~~2SAC-BV-0036~~	Sample 7 Cond Polisher Outlet	M2054A	1	Water Lab	2								
2SAC-BV-0001	Smpl 8 Cond after Gland Cond	M2054A	1	Water Lab	2			RW	RW				
2SAC-BV-0002	Sample 9 DA Inlet	M2054A	1	Water Lab	2			RW	RW				
2SAC-BV-0024	Sample 9 DA Inlet	M2054A	1	Water Lab	2			RW	RW				
2SAC-BV-0037	Sample 9 DA Inlet	M2054A	1	Water Lab	2			RW	RW				
2SAC-BV-0026	Sample 11 Econ Inlet	M2054A	1	Water Lab	2			RW	RW				
2SAC-BV-0039	Sample 11 Econ Inlet	M2054A	1	Water Lab	2			RW	RW				
2SAC-BV-0003	Sample 13 Satuated Steam	M2054A	1	isolate on tree by inside rounds offi	2								
2SAC-BV-0004	Sample 14 Main Steam	M2054A	1	isolate on tree by inside rounds offi	2								
2SAC-BV-0028	Sample 14 Main Steam	M2054A	1	isolate on tree by inside rounds offi	2								
2SAC-BV-0041	Sample 14 Main Steam	M2054A	1	isolate on tree by inside rounds offi	2								
		BV 13 + 14 ISOLATED						RW	RW				
2SGG-BV-0015	M Stm Sample 14	M2069	2	top of mn stm line	2								
2SGG-BV-0016	M Stm Sample 14	M2069	2	top of mn stm line	2								
2FWA-BV-0202	Boiler Feed Sample Line 11	M2035B	10	South of MCC 2B09	2								
2FWA-BV-0203	Boiler Feed Sample Line 11	M2035B	10	South of MCC 2B09	2								
2SGA-BV-0172	Steam Gen Sample 13	M2063B	17	south	2								

O/S

Test 7
Sample 2 — 200 ml/min + 100 ml/min + 150 ml/min + 1l/53.34 sec
Sample 10 — 1l/47.11 sec + 1l/1min 10.0 sec
Sample 12 — 100 ml/min + 50 ml/min + 100 ml/min + 1l/45.09 sec
Seal leakoff 1l/8.98 sec

Test 8
Sample 2 — 450 ml/min + 1l/54.13 sec
Sample 10 — 1l/53.82 sec + 1l/1min 14.84 sec
Sample 12 — 250 ml/min + 1l/50.27 sec
Seal leakoff 1l/4.74 sec

IP7016631

Steve Kelly

TURBINE CYCLE PERFORMANCE TESTING | IGS Unit # 2 | Test # _____

***** CYCLE ISOLATION CHECKOFF SHEETS ***** | Date: 4/9 | Time: _____ | Name: _____

VALVE CLASSIFICATION: ** CRITICAL VALVE LIST**

Class 1*- CRITICAL VALVES- valves which are required to be opened immediately due to operational upset or unit trip

Class 1- Open valves just prior to test and standby, valves need to be opened at the end of each test

Class 2- Close valves up to 2 hours prior to each test (before Class I valves), re-open valves after Class I valves

Class 3- Close valves at the beginning of the day and open at the end of the day

Class NC- Non-Critical Valves- verify normally closed valves are closed (and not leaking) and normally opened valves are open

						VALVE POSITION		CHECKOFF with Initials				Downstream	
VALVE NUMBER	DESCRIPTION	P&ID	Floor	Location	CLASS	Normal	Test	Open	Close	Open	Close	Temp (F)	NOTES:
~~2TED-BV-0019~~	HP Heater 8A Alternate Drain	M2076	1	East of condenser	1*	open	close						
~~2TED-BV-0026~~	HP Heater 8A Alternate Drain	M2076	1	East of condenser	1*	open	close						
~~2TED-BV-0027~~	HP Heater 7A Alternate Drain	M2076	1	East of condenser	1*	open	close						
~~2TED-BV-0028~~	HP Heater 7A Alternate Drain	M2076	1	East of condenser	1*	open	close						
~~2TED-BV-0035~~	HP Heater 6A Alternate Drain	M2076	1	East of condenser	1*	open	close						
~~2TED-BV-0036~~ add	HP Heater 6A Alternate Drain	M2076	1	East of condenser	1*	open	close						
~~2TED-BV-0021~~	HP Heater 8B Alternate Drain	M2076	1	East of condenser	1*	open	close	RW	Russ Webb				leaking
~~2TED-BV-0022~~	HP Heater 8B Alternate Drain	M2076	1	East of condenser	1*	open	close						
~~2TED-BV-0029~~	HP Heater 7B Alternate Drain	M2076	1	East of condenser	1*	open	close						
~~2TED-BV-0030~~	HP Heater 7B Alternate Drain	M2076	1	East of condenser	1*	open	close						
~~2TED-BV-0037~~	HP Heater 6B Alternate Drain	M2076	1	East of condenser	1*	open	close						
~~2TED-BV-0038~~	HP Heater 6B Alternate Drain	M2076	1	East of condenser	1*	open	close						
2TEC-BV-0073	HP Htrs 8A & 8B- extr drain	M2075	1	E of Lube Oil Centrifuge	2	open	close	RW ✓	✓				
2TEC-BV-0075	HP Heaters 8A and 8B Extr Drain	M2075	1	E of Lube Oil Centrifuge	2	open	close	RW ✓	✓				
2TEC-BV-0079	HP Htrs 8A- extr drain	M2075	1	E of Lube Oil Centrifuge	2	open	close	RW ✓	✓				
2TEC-BV-0085	HP Heater 8B Extr Drain	M2075	1	E of Lube Oil Centrifuge RW 96	2	open	close	RW ✓	✓				
2TEC-BV-0087	HP Drain Header- stm trap isolation	M2075	1	✓ EHC skid	2	open	close	RW ✓	✓				
2TEC-BV-0093	HP Heater 8B Extr Drain.	M2075	1	E EHC skid RW 96	2	open	close	RW ✓	✓				
2TEC-BV-0065	LP Heater 4 Extr Drain	M2075	1	NW corner C Cond ceiling	1	open	close						
2SGJ-BV-0056	Cold Reheat Stm Trap- Inlet	M2071	1	204-B	1	open	close						
2SGJ-BV-0057	Cold Reheat Stm Trap- Outlet	M2071	1	204-B	1	open	close	RW ✓	✓				
2TEC-BV-0027	LP Heater 2 Extr Drain	M2075	1	NW corner of cond	3	open	close						
2TEC-BV-0031	LP Heater 2 Extr Drain	M2075	1	bottom row	3	open	close						
2TEC-BV-0035	LP Heater 3 Extr Drain	M2075	1	"	3	open	close						
2TEC-BV-0039	LP Heater 3 Extr Drain	M2075	1	"	3	open	close						
2TEC-BV-0043	LP Heater 4 Extr Drain	M2075	1	"	3	open	close						
2TEC-BV-0047	LP Heater 4 Extr Drain	M2075	1	"	3	open	close						
2TEC-BV-0003	LP Heater 2 Extr Drain	M2075	1	NE corner of cond	3	open	close						
2TEC-BV-0007	LP Heater 2 Extr Drain	M2075	1	"	3	open	close						
2TEC-BV-0011	LP Heater 3 Extr Drain	M2075	1	"	3	open	close						
2TEC-BV-0015	LP Heater 3 Extr Drain	M2075	1	"	3	open	close						
2TEC-BV-0019	LP Heater 4 Extr Drain	M2075	1	"	3	open	close						
2TEC-BV-0023	LP Heater 4 Extr Drain	M2075	1	"	3	open	close						
2TEC-BV-0051	LP Heater 2 Extr Drain	M2075	1	NW corner of cond	3	open	close						
2TEC-BV-0055	LP Heater 2 Extr Drain	M2075	1	top row	3	open	close						
2TEC-BV-0059	LP Heater 3 Extr Drain	M2075	1	"	3	open	close						
2TEC-BV-0063	LP Heater 3 Extr Drain	M2075	1	"	3	open	close						

IP7016632

2TEC-BV-0067	LP Heater 4 Extr Drain	M2075	1	"	3	open	close						
2TEC-BV-0071	LP Heater 4 Extr Drain	M2075	1	"	3	open	close						

IP7016633

Russ Webb
(Russell Carlson)

TURBINE CYCLE PERFORMANCE TESTING

*** CYCLE ISOLATION CHECKOFF SHEETS ***

IGS Unit # 2 | Test # 3
Date: 4-9-02 | Time: | Name:

VALVE CLASSIFICATION: ** CRITICAL VALVE LIST**

Class 1*- CRITICAL VALVES- valves which are required to be opened immediately due to operational upset or unit trip
Class 1- Open valves just prior to test and standby, valves need to be opened at the end of each test
Class 2- Close valves up to 2 hours prior to each test (before Class I valves), re-open valves after Class I valves
Class 3- Close valves at the beginning of the day and open at the end of the day
Class NC- Non-Critical Valves- verify normally closed valves are closed (and not leaking) and normally opened valves are open

VALVE NUMBER	DESCRIPTION	P&ID	Floor	Location	CLASS	VALVE POSITION Normal	VALVE POSITION Test	CHECKOFF with Initials Open	CHECKOFF with Initials Close	CHECKOFF with Initials Open	CHECKOFF with Initials Close	Downstream Temp (F)	NOTES:
2SAC-BV-0017	Sample 1 Makeup to Cond	M2054A	1	Water Lab	2								
2SAC-BV-0030	Sample 1 Makeup to Cond	M2054A	1	Water Lab	2								
~~2SAC-BV-0019~~	Sample 3 Demin 1A Outlet	M2054A	1	Water Lab	2								
~~2SAC-BV-0032~~	Sample 3 Demin 1A Outlet	M2054A	1	Water Lab	2								
~~2SAC-BV-0020~~	Sample 4 Demin 1B Outlet	M2054A	1	Water Lab	2								
~~2SAC-BV-0033~~	Sample 4 Demin 1B Outlet	M2054A	1	Water Lab	2								
~~2SAC-BV-0021~~	Sample 5 Demin 1C Outlet	M2054A	1	Water Lab	2								
~~2SAC-BV-0034~~	Sample 5 Demin 1C Outlet	M2054A	1	Water Lab	2								
~~2SAC-BV-0022~~	Sample 6 Demin 1D Outlet	M2054A	1	Water Lab	2								
~~2SAC-BV-0035~~	Sample 6 Demin 1D Outlet	M2054A	1	Water Lab	2								
~~2SAC-BV-0023~~	Sample 7 Cond Polisher Outlet	M2054A	1	Water Lab	2								
~~2SAC-BV-0036~~	Sample 7 Cond Polisher Outlet	M2054A	1	Water Lab	2								
2SAC-BV-0001	Smpl 8 Cond after Gland Cond	M2054A	1	Water Lab	2			RW	~~RC~~ ✓				
2SAC-BV-0002	Sample 9 DA Inlet	M2054A	1	Water Lab	2			RW	✓				
2SAC-BV-0024	Sample 9 DA Inlet	M2054A	1	Water Lab	2			RW	✓				
2SAC-BV-0037	Sample 9 DA Inlet	M2054A	1	Water Lab (inside Lab)	2			RW	✓				
2SAC-BV-0026	Sample 11 Econ Inlet	M2054A	1	Water Lab	2			RW	✓				
2SAC-BV-0039	Sample 11 Econ Inlet	M2054A	1	Water Lab (inside Lab)	2			RW	✓				
2SAC-BV-0003	Sample 13 Satuated Steam	M2054A	1	isolate on tree by inside rounds offi	2								
2SAC-BV-0004	Sample 14 Main Steam	M2054A	1	isolate on tree by inside rounds offi	2								
2SAC-BV-0028	Sample 14 Main Steam	M2054A	1	isolate on tree by inside rounds offi	2								
2SAC-BV-0041	Sample 14 Main Steam	M2054A	1	isolate on tree by inside rounds offi	2								
				BV 13 & BV 14 Tree by inside rounds				BV 13 RW	✓				
								BV 14 RW	✓				
2SGG-BV-0015	M Stm Sample 14	M2069	2	top of mn stm line	2								
2SGG-BV-0016	M Stm Sample 14	M2069	2	top of mn stm line	2								
2FWA-BV-0202	Boiler Feed Sample Line 11	M2035B	10	South of MCC 2B09	2								
2FWA-BV-0203	Boiler Feed Sample Line 11	M2035B	10	South of MCC 2B09	2								
2SGA-BV-0172	Steam Gen Sample 13	M2063B	17	south	2								

Test 3 Sample 2 150 ml/min + ~~150~~ 50 ml/min + 50 ml/min + 1 l/1 min 16.53 sec
Sample 10 ~~150 ml/min~~ + 1 l/48.94 sec + 1 l/1 min 11.10 sec
Sample 12 120 ml/min + 38 ml/min + 100 ml/min + 1 l/1 min 13.06 sec

Test 4 14:30 Sample 2 250 ml/min + 1 l/1 min 17.44 sec
Sample 10 1 l/49.18 sec + 1 l/1 min 11.23 sec
Sample 12 250 ml/min + 1 l/1 min 17.06 sec

10:15

IP7016634

Trevor Stevens

TURBINE CYCLE PERFORMANCE TESTING

***** CYCLE ISOLATION CHECKOFF SHEETS *****

IGS Unit #2 Date: 4/10 Test # ____ Time: ____ Name: ____

VALVE CLASSIFICATION: ** CRITICAL VALVE LIST**

Class 1*- CRITICAL VALVES- valves which are required to be opened immediately due to operational upset or unit trip

Class 1- Open valves just prior to test and standby, valves need to be opened at the end of each test

Class 2- Close valves up to 2 hours prior to each test (before Class I valves), re-open valves after Class I valves

Class 3- Close valves at the beginning of the day and open at the end of the day

Class NC- Non-Critical Valves- verify normally closed valves are closed (and not leaking) and normally opened valves are open

						VALVE POSITION		CHECKOFF with Initials				Downstream	
VALVE NUMBER	DESCRIPTION	P&ID	Floor	Location	CLASS	Normal	Test	Open	Close	Open	Close	Temp (F)	NOTES:
2HRA-BV-0019	Condensate Normal Drawoff	M2020	1	SW corner of condenser	1	open	close						
2HRA-BV-0020	Condensate Normal Drawoff	M2020	1	SW corner of condenser	1	open	close						
2HRA-BV-0023	Condensate Emerg Drawoff	M2020	1	SW corner of condenser	1	open	close						
~~2TEE-BV-0015~~	Flash Tank Altrn Drain to Cndr	M2077	1	southwest of condenser	1*	open	close						
~~2TEE-BV-0022~~	Flash Tank Altrn Drain to Cndr	M2077	1	southwest of condenser	1*	open	close						
~~2TEE-BV-0011~~	LP Htr 3 Altr HLvl Drain	M2077	1	west of condenser	1*	open	close						
~~2TEE-BV-0019~~	LP Htr 3 Altr HLvl Drain	M2077	1	west of condenser	1*	open	close						
~~2TEE-BV-0013~~	LP Htr 2 Altr HLvl Drain	M2077	1	west of condenser	1*	open	close						
~~2TEE-BV-0021~~	LP Htr 2 Altr HLvl Drain	M2077	1	west of condenser	1*	open	close						
~~2TEE-BV-0009~~	LP Htr 4 Altr HLvl Drain	M2077	2	west of condenser	1*	open	close						
~~2TEE-BV-0017~~	LP Htr 4 Altr HLvl Drain	M2077	2	west of condenser	1*	open	close						
2FWC-BV-0026	Deaerator Recirc to Cond	M2037	2	west of condenser	1								
2FWC-BV-0027	Deaerator Recirc to Cond	M2037	2	west of condenser	1								
2FWC-MBV-0090	Deaerator Recirc to Cond	M2037	2	west of condenser	1			from control room					
2PSA-BV-0082	Aux Stm- Orifice #1	M2008	1	south of EHC skid	2								
2FWD-BV-0121	Makeup to Regen Pumps	M2038B	1	Cond Polisher Regen Pumps	3			—					
2FWD-BV-0125	Makeup to Regen Pumps	M2038B	1	Cond Polisher Regen Pumps	3			—					
2HRA-BV-0030	Condensate Normal Makeup	M2020	2	southwest of condenser	1								
2HRA-BV-0031	Condensate Normal Makeup	M2020	2	southwest of condenser	1								
2HRA-BV-0032	Condensate Normal Makeup	M2020	2	southwest of condenser	1								
~~2TGC-BV-0010~~	Main Stm Supply to Turb Seals	M2080A	2	west of M Stm Header	1*			from control room					
blown packing/ backseated													
2FWA-BV-0388	HP Stop Valve 1B1 stem leakoff	M2035C	2	NW of Condenser	1								
2FWA-BV-0390	HP Stop Valve 1B1 seat drain	M2035C	2	NW of Condenser	1								
2FWA-BV-0391	HP Stop Valve 1A1 seat drain	M2035C	2	N of Condenser	1								
2SGJ-BV-0090	Cond to CRH Desuperhtr 2	M2071	2		1								
2HRB-BV-0109	Separator 1D Makeup Flow	M2021	2	Cond Vacuum Pump D	2								
2HRB-BV-0110	Separator 1C Makeup Flow	M2021	2	Cond Vacuum Pump C	2								
2HRB-BV-0111	Separator 1B Makeup Flow	M2021	2	Cond Vacuum Pump B	2								
2HRB-BV-0112	Separator 1A Makeup Flow	M2021	2	Cond Vacuum Pump A	2								
2TGC-BV-0058	Auxiliary Steam to Cold Reheat	M2080A	2	top of valve deck	1								

IP7016635

								OPEN	CLOSE				
2SGG-BV-0058	Mn Stm Warming Line	M2069	2	NE of MCC 2A03	3			SS	SS				
2SGG-MBV-0009	Main Steam to BFPT 1A	M2069	3	NE of BFPT 1A	1*			SS	SS				
2SGG-MBV-0010	Main Steam to BFPT 1B	M2069	3	SW of BFPT 1B	1*			SS	SS				
key switch													
2TGA-BV-0003	Exhaust Hood Spray Supply	M2079	2	by feedwater heater	1				SS				
2TGA-BV-0004	Exhaust Hood Spray Supply	M2079	2	by feedwater heater	1			SS	SS				

IP7016636

Trevor Stevens
John Pruit

TURBINE CYCLE PERFORMANCE TESTING						IGS Unit # 2		Test #					
*** CYCLE ISOLATION CHECKOFF SHEETS ***						Date: 4/9		Time:		Name:			
VALVE CLASSIFICATION: ** CRITICAL VALVE LIST**													
Class 1*- CRITICAL VALVES- valves which are required to be opened immediately due to operational upset or unit trip													
Class 1- Open valves just prior to test and standby, valves need to be opened at the end of each test													
Class 2- Close valves up to 2 hours prior to each test (before Class I valves), re-open valves after Class I valves													
Class 3- Close valves at the beginning of the day and open at the end of the day													
Class NC- Non-Critical Valves- verify normally closed valves are closed (and not leaking) and normally opened valves are open													
						VALVE POSITION		CHECKOFF with Initials				Downstream	
VALVE NUMBER	DESCRIPTION	P&ID	Floor	Location	CLASS	Normal	Test	Open	Close	Open	Close	Temp (F)	NOTES:
2HRA-BV-0019	Condensate Normal Drawoff	M2020	1	SW corner of condenser	1	open	close	✓					
2HRA-BV-0020	Condensate Normal Drawoff	M2020	1	SW corner of condenser	1	open	close	✓					
2HRA-BV-0023	Condensate Emerg Drawoff	M2020	1	SW corner of condenser	1	open	close	✓					
~~2TEE-BV-0015~~	Flash Tank Altrn Drain to Cndr	M2077	1	southwest of condenser	1*	open	close						
~~2TEE-BV-0022~~	Flash Tank Altrn Drain to Cndr	M2077	1	southwest of condenser	1*	open	close						
~~2TEE-BV-0011~~	LP Htr 3 Altr HLvl Drain	M2077	1	west of condenser	1*	open	close						
~~2TEE-BV-0019~~	LP Htr 3 Altr HLvl Drain	M2077	1	west of condenser	1*	open	close						
~~2TEE-BV-0013~~	LP Htr 2 Altr HLvl Drain	M2077	1	west of condenser	1*	open	close						
~~2TEE-BV-0021~~	LP Htr 2 Altr HLvl Drain	M2077	1	west of condenser	1*	open	close						
~~2TEE-BV-0009~~	LP Htr 4 Altr HLvl Drain	M2077	2	west of condenser	1*	open	close						
~~2TEE-BV-0017~~	LP Htr 4 Altr HLvl Drain	M2077	2	west of condenser	1*	open	close						
2FWC-BV-0026	Deaerator Recirc to Cond	M2037	2	west of condenser	1			✓					
2FWC-BV-0027	Deaerator Recirc to Cond	M2037	2	west of condenser	1			✓					
2FWC-MBV-0090	Deaerator Recirc to Cond	M2037	2	west of condenser	1			from control room					
2PSA-BV-0082	Aux Stm- Orifice #1	M2008	1	south of EHC skid	2			✓					
2FWD-BV-0121	Makeup to Regen Pumps	M2038B	1	Cond Polisher Regen Pumps	3								
2FWD-BV-0125	Makeup to Regen Pumps	M2038B	1	Cond Polisher Regen Pumps	3								
2HRA-BV-0030	Condensate Normal Makeup	M2020	2	southwest of condenser	1			✓					
2HRA-BV-0031	Condensate Normal Makeup	M2020	2	southwest of condenser	1			✓					
2HRA-BV-0032	Condensate Normal Makeup	M2020	2	southwest of condenser	1	ABU							
~~2TGC-BV-0010~~	Main Stm Supply to Turb Seals	M2080A	2	west of M Stm Header	1*			from control room					
blown packing/ backseated													
2FWA-BV-0388	HP Stop Valve 1B1 stem leakoff	M2035C	2	NW of Condenser	1			✓					
2FWA-BV-0390	HP Stop Valve 1B1 seat drain	M2035C	2	NW of Condenser	1			✓					
2FWA-BV-0391	HP Stop Valve 1A1 seat drain	M2035C	2	N of Condenser	1			✓					
2SGJ-BV-0090	Cond to CRH Desuperhtr 2	M2071	2		1			✓					
2HRB-BV-0109	Separator 1D Makeup Flow	M2021	2	Cond Vacuum Pump D	2			✓					
2HRB-BV-0110	Separator 1C Makeup Flow	M2021	2	Cond Vacuum Pump C	2			✓					
2HRB-BV-0111	Separator 1B Makeup Flow	M2021	2	Cond Vacuum Pump B	2			✓					
2HRB-BV-0112	Separator 1A Makeup Flow	M2021	2	Cond Vacuum Pump A	2			✓					
2TGC-BV-0058	Auxiliary Steam to Cold Reheat	M2080A	2	top of valve deck	1			✓					

4/9 1:10 pm

IP7016637

2SGG-BV-0058	Mn Strm Warming Line	M2069	2	NE of MCC 2A03	3								
2SGG-MBV-0009	Main Steam to BFPT 1A	M2069	3	NE of BFPT 1A	1*	✓							
2SGG-MBV-0010	Main Steam to BFPT 1B	M2069	3	SW of BFPT 1B	1*	✓							
key switch													
2TGA-BV-0003	Exhaust Hood Spray Supply	M2079	2	by feedwater heater	1	✓							
2TGA-BV-0004	Exhaust Hood Spray Supply	M2079	2	by feedwater heater	1								

IP7016638

Dan Bliss

TURBINE CYCLE PERFORMANCE TESTING — IGS Unit # 2 — Test # ____

***** CYCLE ISOLATION CHECKOFF SHEETS ***** — Date: 4/10 — Time: ____ — Name: ____

VALVE CLASSIFICATION: ** CRITICAL VALVE LIST**

Class 1*- CRITICAL VALVES- valves which are required to be opened immediately due to operational upset or unit trip

Class 1- Open valves just prior to test and standby, valves need to be opened at the end of each test

Class 2- Close valves up to 2 hours prior to each test (before Class I valves), re-open valves after Class I valves

Class 3- Close valves at the beginning of the day and open at the end of the day

Class NC- Non-Critical Valves- verify normally closed valves are closed (and not leaking) and normally opened valves are open

VALVE NUMBER	DESCRIPTION	P&ID	Floor	Location	CLASS	VALVE POSITION Normal	VALVE POSITION Test	CHECKOFF with Initials Open	CHECKOFF with Initials Close	CHECKOFF with Initials Open	CHECKOFF with Initials Close	Downstream Temp (F)	NOTES:
2SGF-BV-0065	Downcomer Drain Blowdown Manifol	M2068	2	S side of boiler	2				DB				
2SGA-BV-0136	Superheat Bypass	M2063A	2	west end	2				DB			leaking	
2SGA-BV-0169	Superheat Bypass	M2063A	2	west end	2				DB			leaking	
2TGC-MBV-0032	Reheat Bowl Drain	M2080B	2	north of CRV	2				DB			leaking	
2TGC-MBV-0033	Reheat Bowl Drain	M2080B	2	north of CRV	2				DB			leaking	
2SGG-MBV-0011	M Stm to Blowdown Tank	M2069	2	east of vacuum pumps	2				DB			leaking	
2SGG-MBV-0012	M Stm to Blowdown Tank	M2070	2	east of vacuum pumps	2				DB			leaking	
2TEF-BV-0163	LP Htr 3 Cont Vent to Cond	M2078B	3	LP Htr 3	2	✓		RW	DB				
2TEF-BV-0077	HP Htr 6A Cont Vent to DA	M2078A	3	HP Htr 6A	2	✓		RW	DB				
2TEF-BV-0080	HP Htr 6B Cont Vent to DA	M2078A	3	HP Htr 6B	2	✓		RW	DB				
2TEF-BV-0076	HP Htr 7A Cont Vent to DA	M2078A	5	HP Htr 7A	2			JP	DB				
2TEF-BV-0079	HP Htr 7B Cont Vent to DA	M2078A	5	HP Htr 7B	2			JP	DB				
2TEF-BV-0162	LP Htr 4 Cont Vent to Cond	M2078B	5	LP Htr 4	2			JP	DB				
2TEF-BV-0075	HP Htr 8A Cont Vent to DA	M2078A	6	HP Htr 8A	2			JP	DB				
2TEF-BV-0078	HP Htr 8B Cont Vent to DA	M2078A	6	HP Htr 8B	2			JP	DB				
2PSA-MBV-0017 ✓	Cold Reheat Supply to Aux Stm	M2008	9	behind east elevator	2				DB				
2PSA-BV-0012 ✓	Cold Reheat Supply to Aux Stm	M2008	9	behind east elevator	2				DB				
2PSA-BV-0014 ✓	Cold Reheat Supply to Aux Stm	M2008	9	behind east elevator	2				DB				
2SGF-BV-0055 ✓	Lwr Conveyor Pass Header	M2068	10	east	3				DB				
2SGF-BV-0057 ✓	Lwr Conveyor Pass Header	M2068	10	east	3				DB				
2SGF-BV-0035 ✓	Lwr Conveyor Pass Header	M2068	10	west	3				DB				
2SGF-BV-0028 ✓	Lwr Conveyor Pass Header	M2068	10	west	3				DB				
2FWA-BV-0037	BFP 1A Recirc	M2035A	13	east	1*			RW	DB				
2FWA-BV-0038	BFP 1B Recirc	M2035A	13		1*			RW	DB				
2TEF-BV-0003	DA cont vents to atmos	M2078A	14	top of DA	2				DB				
2TEF-BV-0005	DA cont vents to atmos	M2078A	14	top of DA	2				DB				
2TEF-BV-0009	DA cont vents to atmos	M2078A	14	top of DA	2				DB				
2TEF-BV-00011	DA cont vents to atmos	M2078A	14	top of DA	2				DB				
left open - 1, 7 & 13													
2SGF-BV-0041	Sec SH Outlet Header	M2068	15	west	3				DB				

IP7016639

2SGF-BV-0043	Sec SH Intermed Header	M2068	15	west	3				DB				
2SGF-BV-0045	Sec SH Intermed Header	M2068	15	west	3				DB				
2SGF-BV-0049	Sec SH Platen Inlet Header	M2068	15	west	3				DB				
2SGF-BV-0051	Roof Inlet Header	M2068	15	west	3				DB				
2PSA-BV-0021	Aux Pegging Stm to Deaerator	M2008	15	N of east elevator	1"				DB				
~~2PSA-BV-0022~~	Aux Pegging Stm to Deaerator	M2008	15	N of east elevator	1"			open	—				
2PSA-BV-0058	SSH to Aux Stm	M2008	17	west side	2								
~~2SGA-BV-0010~~	MStm Supply to Aux Stm Header	M2063A	17	west side	2				DB				
2SGA-BV-0195	Steam Trap 2	M2063A	16	west side	2			JP	—				
									DB				
2SGA-BV-0199	Steam Trap 3	M2063B	18	so side of drum				JP	DB				
2SGA-BV-0003	Cont Blowdown	M2063B	18	E end of the drum	2				DB				
2SGA-MBV-0004	Cont Blowdown	M2063B	18	E end of the drum	2				DB				
2SGA-MBV-0002	Stm Supply to Aux Stm	M2063B	18	S end of the drum	2				DB				
2SGA-BV-0001	Stm Supply to Aux Stm	M2063B	18	S end of the drum	2				DB				
SGJ													
2SGJ-BV-62	Reheat Spray Desuperheater		7	East				JP					
2SGJ-BV-63	" " " Isolation		7					JP					
SGJ													

IP7016640

Don Bliss

TURBINE CYCLE PERFORMANCE TESTING

***** CYCLE ISOLATION CHECKOFF SHEETS *****

IGS Unit # 2 Test # _____

Date: 4/9 Time: _____ Name: _____

VALVE CLASSIFICATION: ** CRITICAL VALVE LIST**

Class 1*- CRITICAL VALVES- valves which are required to be opened immediately due to operational upset or unit trip

Class 1- Open valves just prior to test and standby, valves need to be opened at the end of each test

Class 2- Close valves up to 2 hours prior to each test (before Class I valves), re-open valves after Class I valves

Class 3- Close valves at the beginning of the day and open at the end of the day

Class NC- Non-Critical Valves- verify normally closed valves are closed (and not leaking) and normally opened valves are open

						VALVE POSITION		CHECKOFF with Initials				Downstream	
VALVE NUMBER	DESCRIPTION	P&ID	Floor	Location	CLASS	Normal	Test	Open	Close	Open	Close	Temp (F)	NOTES:
2SGF-BV-0065	Downcomer Drain Blowdown Manifol	M2068	2	S side of boiler	2				DB				
2SGA-BV-0136	Superheat Bypass	M2063A	2	west end	2				DB			leaking	
2SGA-BV-0169	Superheat Bypass	M2063A	2	west end	2				DB			leaking	
2TGC-MBV-0032	Reheat Bowl Drain	M2080B	2	north of CRV	2				DB			leaking	
2TGC-MBV-0033	Reheat Bowl Drain	M2080B	2	north of CRV	2				DB			leaking	
2SGG-MBV-0011	M Stm to Blowdown Tank	M2069	2	east of vacuum pumps	2				DB			leaking	
2SGG-MBV-0012	M Stm to Blowdown Tank	M2070	2	east of vacuum pumps	2				DB			leaking	
2TEF-BV-0163	LP Htr 3 Cont Vent to Cond	M2078B	3	LP Htr 3	2			✓	DB				
2TEF-BV-0077	HP Htr 6A Cont Vent to DA	M2078A	3	HP Htr 6A	2			✓	DB				
2TEF-BV-0080	HP Htr 6B Cont Vent to DA	M2078A	3	HP Htr 6B	2			✓	DB				
2TEF-BV-0076	HP Htr 7A Cont Vent to DA	M2078A	5	HP Htr 7A	2			✓	DB				
2TEF-BV-0079	HP Htr 7B Cont Vent to DA	M2078A	5	HP Htr 7B	2			✓	DB				
2TEF-BV-0162	LP Htr 4 Cont Vent to Cond	M2078B	5	LP Htr 4	2			✓	DB				
2TEF-BV-0075	HP Htr 8A Cont Vent to DA	M2078A	6	HP Htr 8A	2			✓	DB				
2TEF-BV-0078	HP Htr 8B Cont Vent to DA	M2078A	6	HP Htr 8B	2			✓	DB				
2PSA-MBV-0017	Cold Reheat Supply to Aux Stm	M2008	9	behind east elevator	2				DB				
2PSA-BV-0012	Cold Reheat Supply to Aux Stm	M2008	9	behind east elevator	2				DB				
2PSA-BV-0014	Cold Reheat Supply to Aux Stm	M2008	9	behind east elevator	2				DB				
2SGF-BV-0055	Lwr Conveyor Pass Header	M2068	10	east	3				DB				
2SGF-BV-0057	Lwr Conveyor Pass Header	M2068	10	east	3				DB				
2SGF-BV-0035	Lwr Conveyor Pass Header	M2068	10	west	3				DB				
2SGF-BV-0028	Lwr Conveyor Pass Header	M2068	10	west	3				DB				
2FWA-BV-0037	BFP 1A Recirc	M2035A	13	east	1*			✓	DB				
2FWA-BV-0038	BFP 1B Recirc	M2035A	13		1*			✓	DB				
2TEF-BV-0003	DA cont vents to atmos	M2078A	14	top of DA	2				DB				
2TEF-BV-0005	DA cont vents to atmos	M2078A	14	top of DA	2				DB				
2TEF-BV-0009	DA cont vents to atmos	M2078A	14	top of DA	2				DB				
2TEF-BV-00011	DA cont vents to atmos	M2078A	14	top of DA	2				DB				
left open - 1, 7 & 13													
2SGF-BV-0041	Sec SH Outlet Header	M2068	15	west	3				DB				

IP7016641

2SGF-BV-0043	Sec SH Intermed Header	M2068	15	west	3				DB				
2SGF-BV-0045	Sec SH Intermed Header	M2068	15	west	3				DB				
2SGF-BV-0049	Sec SH Platen Inlet Header	M2068	15	west	3				DB				
2SGF-BV-0051	Roof Inlet Header	M2068	15	west	3				DB				
2PSA-BV-0021	Aux Pegging Stm to Deaerator	M2008	15	N of east elevator	1*				DB				
~~2PSA-BV-0022~~	Aux Pegging Stm to Deaerator	M2008	15	N of east elevator	1*			Open	—				
2PSA-BV-0058	SSH to Aux Stm	M2008	17	west side	2				DB				
~~2SGA-BV-0010~~	MStm Supply to Aux Stm Header	M2063A	17	west side	2			Open	—				
2SGA-BV-0195	Steam Trap 2	M2063A	16	west side	2			✓	DB				
2SGA-BV-0199	Steam Trap 3	M2063B	18	so side of drum				✓	DB				
2SGA-BV-0003	Cont Blowdown	M2063B	18	E end of the drum	2			✓	DB				
2SGA-MBV-0004	Cont Blowdown	M2063B	18	E end of the drum	2			✓	DB				
2SGA-MBV-0002	Stm Supply to Aux Stm	M2063B	18	S end of the drum	2				DB				
2SGA-BV-0001	Stm Supply to Aux Stm	M2063B	18	S end of the drum	2				DB				

IP70166642

Steve Kelly

TURBINE CYCLE PERFORMANCE TESTING | IGS Unit # 2 | Test # ____

***** CYCLE ISOLATION CHECKOFF SHEETS ***** | Date: 4/10 | Time: ____ | Name: ____

VALVE CLASSIFICATION: ** CRITICAL VALVE LIST**

Class 1*- CRITICAL VALVES- valves which are required to be opened immediately due to operational upset or unit trip

Class 1- Open valves just prior to test and standby, valves need to be opened at the end of each test

Class 2- Close valves up to 2 hours prior to each test (before Class I valves), re-open valves after Class I valves

Class 3- Close valves at the beginning of the day and open at the end of the day

Class NC- Non-Critical Valves- verify normally closed valves are closed (and not leaking) and normally opened valves are open

						VALVE POSITION		CHECKOFF with Initials				Downstream	
VALVE NUMBER	DESCRIPTION	P&ID	Floor	Location	CLASS	Normal	Test	Open	Close	Open	Close	Temp (F)	NOTES:
~~2TED-BV-0019~~	HP Heater 8A Alternate Drain	M2076	1	East of condenser	1*	open	close						
~~2TED-BV-0020~~	HP Heater 8A Alternate Drain	M2076	1	East of condenser	1*	open	close						
~~2TED-BV-0027~~	HP Heater 7A Alternate Drain	M2076	1	East of condenser	1*	open	close						
~~2TED-BV-0028~~	HP Heater 7A Alternate Drain	M2076	1	East of condenser	1*	open	close						
~~2TED-BV-0035~~	HP Heater 6A Alternate Drain	M2076	1	East of condenser	1*	open	close						
~~2TED-BV-0036~~	HP Heater 6A Alternate Drain	M2076	1	East of condenser	1*	open	close						
~~2TED-BV-0021~~	HP Heater 8B Alternate Drain	M2076	1	East of condenser	1*	open	close		RW	C/K			
~~2TED-BV-0022~~	HP Heater 8B Alternate Drain	M2076	1	East of condenser	1*	open	close						
~~2TED-BV-0029~~	HP Heater 7B Alternate Drain	M2076	1	East of condenser	1*	open	close						
~~2TED-BV-0030~~	HP Heater 7B Alternate Drain	M2076	1	East of condenser	1*	open	close						
~~2TED-BV-0037~~	HP Heater 6B Alternate Drain	M2076	1	East of condenser	1*	open	close						
~~2TED-BV-0038~~	HP Heater 6B Alternate Drain	M2076	1	East of condenser	1*	open	close						
2TEC-BV-0073	HP Htrs 8A & 8B- extr drain	M2075	1	E of Lube Oil Centrifuge	2	open	close		RW	C/K			
2TEC-BV-0075	HP Heaters 8A and 8B Extr Drain	M2075	1	E of Lube Oil Centrifuge	2	open	close		RW	C/K			
2TEC-BV-0079	HP Htrs 8A- extr drain	M2075	1	E of Lube Oil Centrifuge	2	open	close		RW	C/K			
2TEC-BV-0085	HP Heater 8B Extr Drain	M2075	1	E of Lube Oil Centrifuge	2	open	close		RW	C/K			
2TEC-BV-0081	HP Drain Header- stm trap isolation	M2075	1	E EHC skid	2	open	close		RW	C/K			
2TEC-BV-0093	HP Heater 8B Extr Drain	M2075	1	E EHC skid	2	open	close		RW	C/K			
2TEC-BV-0065	LP Heater 4 Extr Drain	M2075	1	NW corner C Cond ceiling	1	open	close						
2SGJ-BV-0056	Cold Reheat Stm Trap- Inlet	M2071	1	204-B	1	open	close						
2SGJ-BV-0057	Cold Reheat Stm Trap- Outlet	M2071	1	204-B	1	open	close		RW	C/L			
2TEC-BV-0027	LP Heater 2 Extr Drain	M2075	1	NW corner of cond	3	open	close						
2TEC-BV-0031	LP Heater 2 Extr Drain	M2075	1	bottom row	3	open	close						
2TEC-BV-0035	LP Heater 3 Extr Drain	M2075	1	"	3	open	close						
2TEC-BV-0039	LP Heater 3 Extr Drain	M2075	1	"	3	open	close						
2TEC-BV-0043	LP Heater 4 Extr Drain	M2075	1	"	3	open	close						
2TEC-BV-0047	LP Heater 4 Extr Drain	M2075	1	"	3	open	close						
2TEC-BV-0003	LP Heater 2 Extr Drain	M2075	1	NE corner of cond	3	open	close						
2TEC-BV-0007	LP Heater 2 Extr Drain	M2075	1	"	3	open	close						
2TEC-BV-0011	LP Heater 3 Extr Drain	M2075	1	"	3	open	close						
2TEC-BV-0015	LP Heater 3 Extr Drain	M2075	1	"	3	open	close						
2TEC-BV-0019	LP Heater 4 Extr Drain	M2075	1	"	3	open	close						
2TEC-BV-0023	LP Heater 4 Extr Drain	M2075	1	"	3	open	close						
2TEC-BV-0051	LP Heater 2 Extr Drain	M2075	1	NW corner of cond	3	open	close						
2TEC-BV-0055	LP Heater 2 Extr Drain	M2075	1	top row	3	open	close						
2TEC-BV-0059	LP Heater 3 Extr Drain	M2075	1	"	3	open	close						
2TEC-BV-0063	LP Heater 3 Extr Drain	M2075	1	"	3	open	close						

IP7016643

2TEC-BV-0067	LP Heater 4 Extr Drain	M2075	1	"	3	open	close						
2TEC-BV-0071	LP Heater 4 Extr Drain	M2075	1	"	3	open	close						

IP70166644

TURBINE CYCLE PERFORMANCE TESTING | IGS Unit # 2 | Test # 5

***** CYCLE ISOLATION CHECKOFF SHEETS ***** | Date: 4/10/02 | Time: | Name: DS

VALVE CLASSIFICATION:

Class I*- **CRITICAL VALVES**- valves which are required to be opened immediately due to operational upset or unit trip

Class I- Open valves just prior to test and standby, valves need to be opened at the end of each test

Class II- Close valves up to 2 hours prior to each test (before Class I valves), re-open valves after Class I valves

Class III- Close valves at the beginning of the day and open at the end of the day

Class IV- Non-Critical Valves- verify normally closed valves are closed (and not leaking) and normally opened valves are open

LOCATION: CONDENSER CONNECTIONS- EAST BASEMENT

			LOCATION					VALVE POSITION		CHECKOFF		Downstream	
VALVE NUMBER	DESCRIPTION	P&ID	Floor	Near	Area	Termintaion Point	CLASS	Normal	Test	Initials		Temp (F)	NOTES:
TGC-BV-65	Drain from TDV to Htr	M2080A	2	ss-plat	Diag A #1	Cond TB end bsmt						F	
TGC-BV-67	Drain from TDV to Htr	M2080A	2	ss-plat	Diag A #1	Cond TB end bsmt						F	
FWA-MBV-189	Wrmup Drain from FW to Htr 6	M2035A			Diag A #2	Cond TB end bsmt						F	
TGC-MBV-31	RHT bowl drain to cond	M2080B	1	s-ehc	Diag A #3	Cond TB end bsmt						F	
TGC-MBV-37	Control Valve drain to cond.	M2080B	2	convlvs	Diag A #4	Cond TB end bsmt						F	
TGC-MBV-39	Control Valve drain to cond.	M2080B	2	convlvs	Diag A #5	Cond TB end bsmt						F	
TGC-MBV-40	Control Valve drain to cond.	M2080B	2	convlvs	Diag A #6	Cond TB end bsmt						F	
TGC-MBV-33	Stop Valve drain to cond	M2080B	2	stpvlvs	Diag A #7	Cond TB end bsmt						F	
TGC-MBV-34	Stop Valve drain to cond	M2080B	2	stpvlvs	Diag A #8	Cond TB end bsmt						F	
TGC-MBV-36	Stop Valve drain to cond	M2080B	2	stpvlvs	Diag A #9	Cond TB end bsmt						F	
TGC-MBV-35	Stop Valve drain to cond	M2080B	2	stpvlvs	Diag A #10	Cond TB end bsmt						F	
TGC-MBV-32	RHT bowl drain to cond	M2080B	1	s-ehc	Diag A #11	Cond TB end bsmt						F	
SGJ-MBV-18	CRH low point drains	M2071	1	s-ehc	Diag A #12	Cond TB end bsmt						F	
SGJ-MBV-14	HRH low point drains	M2071	1	s-ehc	Diag A #13	Cond TB end bsmt						F	
SGJ-MBV-16	HRH low point drains	M2071	1	s-ehc	Diag A #13	Cond TB end bsmt						F	
SGG-MBV-25	MS Byp to cond low pt drain	M2069	2	ne-cond	Diag A #14	Cond TB end bsmt						F	
TGC-MBV-38	Control Valve drain to cond	M2080B	2	convlvs	Diag A #15	Cond TB end bsmt						F	
TGC-MBV-49	MS lead drain to cond	M2080	1	sw-ehc	Diag A #16	Cond TB end bsmt						F	
TGC-ACV-4	TDV to cond	M2080A	2.5	stmslplt	Diag A #17	Cond TB end bsmt						F	
TGA-ABV-20	Equalizer valve	M2079	2		Diag A #18	Cond TB end bsmt						F	
TED-ACV-11	Htr 6A hi level dump	M2076	1	e-cond	Diag A #20	Cond TB end bsmt						F	
TED-ACV-12	Htr 6B hi level dump	M2076	1	e-cond	Diag A #21	Cond TB end bsmt						F	
TED-ACV-3	Htr 8A hi level dump	M2076	1	e-cond	Diag A #22	Cond TB end bsmt						F	
TED-ACV-4	Htr 8B hi level dump	M2076	1	e-cond	Diag A#24	Cond TB end bsmt						F	
TED-ACV-8	Htr 7B hi level dump	M2076	1	e-cond	Diag A#25	Cond TB end bsmt						100 F	
TGC-ORF-8	~~SSH low point drain~~	M2080A	1		Diag A#26	Cond TB end bsmt						F	
TED-ACV-7	~~Htr 7A hi level dump~~	M2076	1	e-cond	Diag A#27	Cond TB end bsmt						130 F	
TEC-ACV-146	Drn frm ~~LPextr stm~~ to BFPT A	M2075	1	e-cond	Diag A#28	Cond TB end bsmt						F	

LOCATION: HP DRAIN HEADER

			LOCATION					VALVE POSITION		CHECKOFF		Downstream	
VALVE NUMBER	DESCRIPTION	P&ID	Floor	Near	Area	Termintaion Point	CLASS	Normal	Test	Initials		Temp (F)	NOTES:
SGI-MBV-178	Air heater sootblowers drain	M2070	1	E-EHC	DiagB1#1	HP Drain Header						F	
SGI-MBV-35	Boiler sootblowers drain	M2070	1	E-EHC	DiagB1#2	HP Drain Header						F	
TEC-ACV-14	4th stg extr (drain) to HTR 8A & 8	M2075	1	E-EHC	DiagB1#3	HP Drain Header						F	

IP7016645

TEC-ACV-80	4th stg extr (drain) to HTR 8A	M2075	1	E-EHC	DiagB1#4	HP Drain Header						F	
TEC-ACV-140	14th stg extr (drain) to BFPT 1B	M2075	1	E-EHC	DiagB1#5	HP Drain Header						F	
TEC-ACV-128	14th stg extr (drain) to DA	M2075	1	E-EHC	DiagB1#6	HP Drain Header						F	
TEC-ACV-116	14th stg extr (drain) to DA	M2075	1	E-EHC	DiagB1#7	HP Drain Header						F	
TEC-ACV-86	4th stg extr (drain) to HTR 8B	M2075	1	E-EHC	DiagB1#8	HP Drain Header						F	
TEC-ACV-92	11th stg extr (drain) to HTR 6A&B	M2075	1	E-EHC	DiagB1#9	HP Drain Header						F	
TEC-ACV-98	11th stg extr (drain) to HTR 6A	M2075	1	E-EHC	DiagB1#10	HP Drain Header						F	
TEC-ACV-101	11th stg extr (drain) to HTR 6B	M2075	1	E-EHC	DiagB1#11	HP Drain Header						F	
TEC-ACV-134	14th stg extr (drain) to BFPT 1A	M2075	1	E-EHC	DiagB1#12	HP Drain Header						F	
TEC-ACV-122	14th stg extr (drain) to BFPT 1A&	M2075	1	E-EHC	DiagB1#13	HP Drain Header						F	
TEC-ACV-110	14th stg extr (drain) to DA	M2075	1	E-EHC	DiagB1#14	HP Drain Header						F	
PSA-ORF-1	Aux Stm Hdr orificed drain line	M2008	1	S-EHC	DiagB1#15	HP Drain Header						F	

LOCATION: LP DRAIN HEADER

			LOCATION					VALVE POSITION		CHECKOFF		Downstream	
VALVE NUMBER	DESCRIPTION	P&ID	Floor	Near	Area	Termintaion Point	CLASS	Normal	Test	Initials		Temp (F)	NOTES:
TEC-ACV-2	HTR 2 extr from A hood (drain)	M2075	1	ne-cond	DiagB2#1	LP Drain Header						F	
TEC-ACV-6	HTR 2 extr from A hood (drain)	M2075	1	ne-cond	DiagB2#2	LP Drain Header						F	
TEC-ACV-10	HTR 3 extr from A hood (drain)	M2075	1	ne-cond	DiagB2#3	LP Drain Header						F	
TEC-ACV-14	HTR 3 extr from A hood (drain)	M2075	1	ne-cond	DiagB2#4	LP Drain Header						F	
TEC-ACV-18	HTR 4 extr from A hood (drain)	M2075	1	ne-cond	DiagB2#5	LP Drain Header						F	
TEC-ACV-22	HTR 4 extr from A hood (drain)	M2075	1	ne-cond	DiagB2#6	LP Drain Header						F	
TEC-ACV-50	Extr to HTR 2 from C hood drain	M2075	1	nw-cond	DiagB3#1	LP Drain Header						F	

— @ CV Steam leakoff —

— @ Aux steam iso. —

IP70166646

TEC-ACV-54	Extr to HTR 2 from C hood drain	M2075	1	nw-cond	DiagB3#2	LP Drain Header						F	
TEC-ACV-58	Extr to HTR3 from C hood drain	M2075	1	nw-cond	DiagB3#3	LP Drain Header						F	
TEC-ACV-62	Extr to HTR3 from C hood drain	M2075	1	nw-cond	DiagB3#4	LP Drain Header						F	
TEC-ACV-66	Extr to HTR 4 from C hood drain	M2075	1	nw-cond	DiagB3#5	LP Drain Header						F	
TEC-ACV-70	Extr to HTR 4 from C hood drain	M2075	1	nw-cond	DiagB3#6	LP Drain Header						F	
TEC-ACV-26	Extr to HTR 2 from B hood drain	M2075	1	nw-cond	DiagB3#7	LP Drain Header						F	
TEC-ACV-30	Extr to HTR 2 from B hood drain	M2075	1	nw-cond	DiagB3#8	LP Drain Header						F	
TEC-ACV-34	Extr to HTR 3 from B hood drain	M2075	1	nw-cond	DiagB3#9	LP Drain Header						F	
TEC-ACV-38	Extr to HTR 3 from B hood drain	M2075	1	nw-cond	DiagB3#10	LP Drain Header						F	
TEC-ACV-42	Extr to HTR 4 from B hood drain	M2075	1	nw-cond	DiagB3#11	LP Drain Header						F	
TEC-ACV-46	Extr to HTR 4 from B hood drain	M2075	1	nw-cond	DiagB3#12	LP Drain Header						F	

LOCATION: CONDENSER CONNECTIONS-NORTH MEZZANINE

			LOCATION					VALVE POSITION		CHECKOFF		Downstream	
VALVE NUMBER	DESCRIPTION	P&ID	Floor	Near	Area	Termintaion Point	CLASS	Normal	Test	Initials		Temp (F)	NOTES:
FWA-ABV-303	BFPT "A" HP Stop Vlv Drain	M2035C	2	N-cond	Diag C #6	dwncmr drns hdr						F	
FWA-ABV-309	BFPT"A"LP stp vlv below stdr	M2035C	2	N-cond	Diag C #7	Cond-A NorthMez						F	
FWA-ABV-305	BFPT"A" HP Stop Valve Drain	M2035C	2	N-cond	Diag C #8	Cond-A NorthMez						F	
FWA-ABV-311	BFPT"A" First Stage Drain	M2035C	2	ne-cnd	Diag C #9	Cond-A NorthMez						F	
TEF-BV-162	HTR 4 Vent to Condenser	M2078B	5	HTR4	Diag C #10	Cond-North Mezz						F	
TEF-BV-163	HTR 3 Vent to Condenser	M2078B	3	HTR3	Diag C #11	Cond-North Mezz						F	
TEF-BV-164	HTR 2 Vent to Condenser	M2078B	2	HTR2	Diag C #12	Cond-North Mezz						F	
FWA-ABV-312	BFPT"B" First Stage Drain	M2035C	2	nw-cnd	Diag C #13	Cond-C NorthMez						F	
FWA-ABV-306	BFPT"B" HP Stop Valve Drain	M2035C	2	N-cond	Diag C #14	Cond-C NorthMez						F	
FWA-ABV-310	BFPT"B"LP stpvlv below st dr	M2035C	2	N-cond	Diag C #15	Cond-C NorthMez						F	
FWA-ABV-304	BFPT"B" HP Stop Valve Drain	M2035C	2	N-cond	Diag C #16	dwncmr drns hdr						F	

LOCATION: CONDENSER CONNECTIONS-NORTH BASEMENT (check on mezzanine level)

			LOCATION					VALVE POSITION		CHECKOFF		Downstream	
VALVE NUMBER	DESCRIPTION	P&ID	Floor	Near	Area	Termintaion Point	CLASS	Normal	Test	Initials		Temp (F)	NOTES:
TGC-ORF-11	Steam Seal Hdr Low Point Drain	M2080A	2	N-cond	A-cond	Cond-A North Basemt						F	
FWA-ABV-307	BFPT 1A Stpvlv above seat drn	M2035C	2	N-cond	A-cond	Cond-A North Basemt						F	
FWA-ABV-308	BFPT 1B Stpvlv above seat drn	M2035C	2	N-cond	C-cond	Cond-C North Basemt						F	

IP70166647

LOCATION: WEST SIDE BOILER DRAINS

VALVE NUMBER	DESCRIPTION	P&ID	LOCATION Floor	Near	Area	Termintaion Point	CLASS	VALVE POSITION Normal	Test	CHECKOFF Initials		Downstream Temp (F)	NOTES:
SGF-MBV-52	Roof Inlet header drain	M2068	4	fdr dck	west boiler	W boil drn bldwn hdr						F	
SGF-MBV-50	Sec SH Platen inlet drain header	M2068	4	fdr dck	west boiler	W boil drn bldwn hdr						F	
SGF-BV-48	Economizer discharge header drn	M2068	4	fdr dck	west boiler	W boil drn bldwn hdr						F	
SGF-MBV-46	Sec SH Intermediate inlet hdr drain	M2068	4	fdr dck	west boiler	W boil drn bldwn hdr						F	
SGF-MBV-44	Sec SH Intermediate inlet hdr drain	M2068	4	fdr dck	west boiler	W boil drn bldwn hdr						F	
PSA-TRP-16	Aux stm from drum and SSH stm t	M2008	14	S-boiler	south boiler	RH outlet bldwn hdr						F	
SGA-TRP-02	Main stm to Aux stm hdr drain trap	M2063A	16	Wboiler	west boiler	Mn Stm drip pkt drn						F	
SGF-BV-40	Reheater outlet header drain	M2068	4	fdr dck	west boiler	RH outlet hdr bldwn						F	
SGF-BV-38	Reheater outlet header drain	M2068	4	fdr dck	west boiler	RH outlet hdr bldwn						F	
SGF-MBV-36	Lower convect pass hdr drain	M2068	4	fdr dck	west boiler	W boil drn bldwn hdr						F	
SGF-BV-34	Reheater inlet header drain	M2068	4	fdr dck	west boiler	W boil drn bldwn hdr						F	
SGF-BV-31	Economizer inlet header drain	M2068	4	fdr dck	west boiler	W boil drn bldwn hdr						F	
SGA-BV-19	Drum level gage drain	M2063B	18	W-Drum	west boiler	W boil drn bldwn hdr						F	
SGA-BV-26	Drum level gage drain	M2063B	18	W-Drum	west boiler	W boil drn bldwn hdr						F	
SGF-MBV-29	Lower convect pass hdr drain	M2068	4	fdr dck	west boiler	W boil drn bldwn hdr						F	
SGF-MBV-42	Sec SH outlet header drain	M2068	4	fdr dck	west boiler	Blowdown Tank 1						F	
SGA-BV-32	Drum steam pressure gage drain	M2063B	18	W-Drum	west boiler	W boil drn bldwn hdr						F	

LOCATION: EAST SIDE BOILER DRAINS

VALVE NUMBER	DESCRIPTION	P&ID	LOCATION Floor	Near	Area	Termintaion Point	CLASS	VALVE POSITION Normal	Test	CHECKOFF Initials		Downstream Temp (F)	NOTES:
SGA-TRP-03	Drum to Aux stm drain stm trp	M2063B	18	S-boiler	east boiler	E boil drn bldwn hdr						F	
SGF-BV-54	Economizer discharge header drn	M2068	4	sub-fdr	east boiler	E boil drn bldwn hdr						F	
SGF-MBV-56	Lower convect pass hdr drain	M2068	4	sub-fdr	east boiler	E boil drn bldwn hdr						F	
SGF-MBV-58	Lower convect pass hdr drain	M2068	4	sub-fdr	east boiler	E boil drn bldwn hdr						F	
SGA-MBV-4	Drum continuous blowdown	M2068	18	E-drum	east boiler	E boil drn bldwn hdr						F	
PSA-TRP-01	Cold Reheat Aux Steam Supply	M2008	8	SE-boil	east elev	E boil drn bldwn hdr						F	

LOCATION: MAIN STEAM DRIP POCKET

VALVE NUMBER	DESCRIPTION	P&ID	LOCATION Floor	Near	Area	Termintaion Point	CLASS	VALVE POSITION Normal	Test	CHECKOFF Initials		Downstream Temp (F)	NOTES:
SGG-MBV-11	Main Steam to Blowdown Tank	M2069	2	SE-boil	NE-SV&CV	Blowdown Tank						226 F	
SGG-MBV-12	Main Steam to Blowdown Tank	M2069	2	SE-boil	NE-SV&CV	Blowdown Tank						226 F	
SGG-MBV-13	Main Steam to Blowdown Tank	M2069	2	SE-boil	NE-SV&CV	Blowdown Tank						180 F	
SGG-MBV-14	Main Steam to Blowdown Tank	M2069	2	SE-boil	NE-SV&CV	Blowdown Tank						170 F	

LOCATION: DOWNCOMER DRAINS

VALVE NUMBER	DESCRIPTION	P&ID	LOCATION Floor	Near	Area	Termintaion Point	CLASS	VALVE POSITION Normal	Test	CHECKOFF Initials		Downstream Temp (F)	NOTES:
SGF-BV-59	Drum West End Downcomer	M2068	2	S-boiler	N of Htr 2	DwncmDrnBldnHdr						F	
SGF-BV-60	Drum West End Downcomer	M2068	2	S-boiler	N of Htr 2	DwncmDrnBldnHdr						F	
SGF-BV-61	Drum West Shell Downcomer	M2068	2	S-boiler	N of Htr 2	DwncmDrnBldnHdr						F	

IP7016648

SGF-BV-62	Drum West Shell Downcomer	M2068	2	S-boiler	N of Htr 2	DwncmDrnBldnHdr						___F	
SGF-MBV-66	Downcomer Drain Manifold Drain	M2068	2	S-boiler	N of Htr 2	DwncmDrnBldnHdr						___F	
SGF-BV-63	Drum Center Shell Downcomer	M2068	2	S-boiler	N of Htr 2	DwncmDrnBldnHdr						___F	
SGF-BV-64	Drum Center Shell Downcomer	M2068	2	S-boiler	N of Htr 2	DwncmDrnBldnHdr						___F	
SGF-BV-67	Drum East Shell Downcomer	M2068	2	S-boiler	N of Htr 2	DwncmDrnBldnHdr						___F	
SGF-BV-68	Drum East Shell Downcomer	M2068	2	S-boiler	N of Htr 2	DwncmDrnBldnHdr						___F	
SGF-BV-69	Drum East End Downcomer	M2068	2	S-boiler	N of Htr 2	DwncmDrnBldnHdr						___F	
SGF-BV-70	Drum East End Downcomer	M2068	2	S-boiler	N of Htr 2	DwncmDrnBldnHdr						___F	

LOCATION: SUPERHEAT BYPASS

			LOCATION					VALVE POSITION		CHECKOFF		Downstream	
VALVE NUMBER	DESCRIPTION	P&ID	Floor	Near	Area	Termintaion Point	CLASS	Normal	Test	Initials		Temp (F)	NOTES:
SGA-TRP-1	Superheat Bypass Drain Trap	M2063A	12	NW-boil	NW corner	Partial Byp Drn Cnd						___F	
SGA-ACV-137	Superheat Bypass	M2063A	2	W-Cond	NW corner	C Condenser-West						___F	

LOCATION: MISCELLANEOUS VALVES

			LOCATION					VALVE POSITION		CHECKOFF		Downstream	
VALVE NUMBER	DESCRIPTION	P&ID	Floor	Near	Area	Termintaion Point	CLASS	Normal	Test	Initials		Temp (F)	NOTES:
FWA-BV-299	Bootstrap Valve	M2035A	2	SW-boil	SW Htr 2							___F	
FWC-ACV-28	DEA Recirc	M2037	2	W-Cond	NW corner	C Condenser-West						___F	1200 ACV 87
TEC-ACV-152	1B BFPT Extraction Drain	M2075	2	W-Cond	NW corner	Cond-Basement						180 F	

LOCATION: VACUUM PUMPS

			LOCATION					VALVE POSITION		CHECKOFF		Downstream	
VALVE NUMBER	DESCRIPTION	P&ID	Floor	Near	Area	Termintaion Point	CLASS	Normal	Test	Initials		Temp (F)	NOTES:
HRB-P-1A	1A Vacuum Pump	M2021	2	SE-Boil	East Elevtr							17 F	Air
HRB-P-1B	1B Vacuum Pump	M2021	2	SE-Boil	East Elevtr							4.5 F	Leakage
HRB-P-1C	1C Vacuum Pump	M2021	2	SE-Boil	East Elevtr							7 F	
HRB-P-1D	1D Vacuum Pump	M2021	2	SE-Boil	East Elevtr							___F	12:10

LOCATION:

			LOCATION					VALVE POSITION		CHECKOFF		Downstream	
VALVE NUMBER	DESCRIPTION	P&ID	Floor	Near	Area	Termintaion Point	CLASS	Normal	Test	Initials		Temp (F)	NOTES:
TGA-ABV-2	Ventilator Valve	M2079	2	CV's	E A Cond	Atm - roof vents						___F	
FWA-PS-70	BFP 1A Inlet Strainer DP	M2035A	2	N-Cond	BFPT Exh							___F	
FWA-PS-71	BFP 1B Inlet Strainer DP	M2035A	2	N-Cond	BFPT Exh							___F	
SGI-ABV-21	AH Soot Blower Drain	M2070	3	NE-Boil	Stairs	Cond						___F	
SGI-ABV-22	AH Soot Blower Drain	M2070	3	NW-Boil	Stairs	Cond						___F	
SGI-ABV-170	Boiler Soot Blower Drain	M2070	7	W-Boil		Cond						___F	
SGI-ABV-171	Boiler Soot Blower Drain	M2070	7	E-Boil		Cond						___F	
SGI-ABV-172	Boiler Soot Blower Drain	M2070	11	E-Boil	Backpass	Cond						___F	
SGI-ABV-173	Boiler Soot Blower Drain	M2070	11	W-Boil	Backpass	Cond						___F	
SGA-MBV-173	Economizer Recirc	M2063A	10.5	W-Boil	Backpass	Economizer inlet						___F	
SGA-MBV-174	Economizer Recirc	M2063A	10.5	E-Boil	Backpass	Economizer inlet						___F	

IP7016649

SGG-MCV-18	Main Steam Warming Line	M2069	2	E-CV'S		Cond						F	
SGG-MBV-25	Main Steam Line Drain	M2069	2	E-CV'S		Cond						F	
SGG-MBV-26	Main Steam Line Drain	M2069	2	E-CV'S		Cond						F	
SGG-MBV-55	Main Steam to BFPT Drain	M2069	2	E-CV'S		Cond						F	
SGG-MBV-56	Main Steam to BFPT Drain	M2069	2	E-CV'S		Cond						F	
PSA-ACV-60	Drum Aux Steam Supply	M2008	17	S-Boil		Aux						F	
PSA-ACV-57	SSH Aux Steam Supply	M2008	17	W-Boil		Aux						F	

IP70166650

Day 2 - Test 3 T/2300

IP7016651

Seal leakoff SB BFP

Russ Webb (Russell Carlson)

TURBINE CYCLE PERFORMANCE TESTING

***** CYCLE ISOLATION CHECKOFF SHEETS *****

IGS Unit # 2 | Test # 5, 6
Date: 4/10 | Time: | Name:

VALVE CLASSIFICATION: ** CRITICAL VALVE LIST**

Class 1*- **CRITICAL VALVES-** valves which are required to be opened immediately due to operational upset or unit trip
Class 1- Open valves just prior to test and standby, valves need to be opened at the end of each test
Class 2- Close valves up to 2 hours prior to each test (before Class I valves), re-open valves after Class I valves
Class 3- Close valves at the beginning of the day and open at the end of the day
Class NC- Non-Critical Valves- verify normally closed valves are closed (and not leaking) and normally opened valves are open

VALVE NUMBER	DESCRIPTION	P&ID	Floor	Location	CLASS	VALVE POSITION Normal	VALVE POSITION Test	CHECKOFF with Initials Open	CHECKOFF with Initials Close	CHECKOFF with Initials Open	CHECKOFF with Initials Close	Downstream Temp (F)	NOTES:
2SAC-BV-0017	Sample 1 Makeup to Cond	M2054A	1	Water Lab	2			RW	RW				
2SAC-BV-0030	Sample 1 Makeup to Cond	M2054A	1	Water Lab INSIDE LAB	2			RW	RW				
~~2SAC-BV-0019~~	Sample 3 Demin 1A Outlet	M2054A	1	Water Lab	2								
~~2SAC-BV-0032~~	Sample 3 Demin 1A Outlet	M2054A	1	Water Lab	2								
~~2SAC-BV-0020~~	Sample 4 Demin 1B Outlet	M2054A	1	Water Lab	2								
~~2SAC-BV-0033~~	Sample 4 Demin 1B Outlet	M2054A	1	Water Lab	2								
~~2SAC-BV-0021~~	Sample 5 Demin 1C Outlet	M2054A	1	Water Lab	2								
~~2SAC-BV-0034~~	Sample 5 Demin 1C Outlet	M2054A	1	Water Lab	2								
~~2SAC-BV-0022~~	Sample 6 Demin 1D Outlet	M2054A	1	Water Lab	2								
~~2SAC-BV-0035~~	Sample 6 Demin 1D Outlet	M2054A	1	Water Lab	2								
~~2SAC-BV-0023~~	Sample 7 Cond Polisher Outlet	M2054A	1	Water Lab	2								
~~2SAC-BV-0036~~	Sample 7 Cond Polisher Outlet	M2054A	1	Water Lab	2								
2SAC-BV-0001	Smpl 8 Cond after Gland Cond	M2054A	1	Water Lab	2			RW	RW				
2SAC-BV-0002	Sample 9 DA Inlet	M2054A	1	Water Lab	2			RW	RW				
2SAC-BV-0024	Sample 9 DA Inlet	M2054A	1	Water Lab	2			RW	RW				
2SAC-BV-0037	Sample 9 DA Inlet	M2054A	1	Water Lab	2			RW	RW				
2SAC-BV-0026	Sample 11 Econ Inlet	M2054A	1	Water Lab	2			RW	RW				
2SAC-BV-0039	Sample 11 Econ Inlet	M2054A	1	Water Lab	2			RW	RW				
2SAC-BV-0003	Sample 13 Satuated Steam	M2054A	1	isolate on tree by inside rounds offi	2								
2SAC-BV-0004	Sample 14 Main Steam	M2054A	1	isolate on tree by inside rounds offi	2								
2SAC-BV-0028	Sample 14 Main Steam	M2054A	1	isolate on tree by inside rounds offi	2								
2SAC-BV-0041	Sample 14 Main Steam	M2054A	1	isolate on tree by inside rounds offi	2								
									RW				
									RW				
2SGG-BV-0015	M Stm Sample 14	M2069	2	top of mn stm line	2								
2SGG-BV-0016	M Stm Sample 14	M2069	2	top of mn stm line	2								
2FWA-BV-0202	Boiler Feed Sample Line 11	M2035B	10	South of MCC 2B09	2								
2FWA-BV-0203	Boiler Feed Sample Line 11	M2035B	10	South of MCC 2B09	2								
2SGA-BV-0172	Steam Gen Sample 13	M2063B	17	south	2								

out of SERV NO FLOW

BV 13 + 14 CLOSED RW
By Inside Rounds

Test 5
Sample 2 150 ml/min + 50 ml/min + 50 ml/min + 1 l/1 min 5.96 sec
Sample 10 1 l/48.29 sec + 1 l/1 min 10.89 sec
Sample 12 175 ml/min + 1 l/1 min 16.78 sec
100 - 25 - 50

Test 6
Sample 2 250 ml/min + 1 l/1 min 8.99 sec
Sample 10 1 l/48.42 sec + 1 l/1 min 11.46 sec
Sample 12 175 ml/min + 1 l/1 min 24.37 sec

Seal Leakoff SB BFP FWB-M2036 to Floor drain 1 l/45 sec.

SB BFP leakoff 1 l/16.7 sec

IP7016652

TURBINE CYCLE PERFORMANCE TESTING | IGS Unit # 2 | Test # _____

***** CYCLE ISOLATION CHECKOFF SHEETS ***** | Date: _____ | Time: _____ | Name: _____

VALVE CLASSIFICATION: ** CRITICAL VALVE LIST**

Class 1*- CRITICAL VALVES- valves which are required to be opened immediately due to operational upset or unit trip

Class 1- Open valves just prior to test and standby, valves need to be opened at the end of each test

Class 2- Close valves up to 2 hours prior to each test (before Class I valves), re-open valves after Class I valves

Class 3- Close valves at the beginning of the day and open at the end of the day

Class NC- Non-Critical Valves- verify normally closed valves are closed (and not leaking) and normally opened valves are open

						VALVE POSITION		CHECKOFF with Initials				Downstream	
VALVE NUMBER	DESCRIPTION	P&ID	Floor	Location	CLASS	Normal	Test	Open	Close	Open	Close	Temp (F)	NOTES:
2TED-BV-0019	HP Heater 8A Alternate Drain	M2076	1	East of condenser	1*	open	close						
2TED-BV-0020	HP Heater 8A Alternate Drain	M2076	1	East of condenser	1*	open	close						
2TED-BV-0027	HP Heater 7A Alternate Drain	M2076	1	East of condenser	1*	open	close						
2TED-BV-0028	HP Heater 7A Alternate Drain	M2076	1	East of condenser	1*	open	close						
2TED-BV-0035	HP Heater 6A Alternate Drain	M2076	1	East of condenser	1*	open	close						
2TED-BV-0036	HP Heater 6A Alternate Drain	M2076	1	East of condenser	1*	open	close						
2TED-BV-0021	HP Heater 8B Alternate Drain	M2076	1	East of condenser	1*	open	close						
2TED-BV-0022	HP Heater 8B Alternate Drain	M2076	1	East of condenser	1*	open	close						
2TED-BV-0029	HP Heater 7B Alternate Drain	M2076	1	East of condenser	1*	open	close						
2TED-BV-0030	HP Heater 7B Alternate Drain	M2076	1	East of condenser	1*	open	close						
2TED-BV-0037	HP Heater 6B Alternate Drain	M2076	1	East of condenser	1*	open	close						
2TED-BV-0038	HP Heater 6B Alternate Drain	M2076	1	East of condenser	1*	open	close						
2TEC-BV-0073	HP Htrs 8A & 8B- extr drain	M2075	1	E of Lube Oil Centrifuge	2	open	close						
2TEC-BV-0075	HP Heaters 8A and 8B Extr Drain	M2075	1	E of Lube Oil Centrifuge	2	open	close						
2TEC-BV-0079	HP Htrs 8A- extr drain	M2075	1	E of Lube Oil Centrifuge	2	open	close						
2TEC-BV-0085	HP Heater 8B Extr Drain	M2075	1	E of Lube Oil Centrifuge	2	open	close						
2TEC-BV-0065	LP Heater 4 Extr Drain	M2075	1	NW corner C Cond ceiling	1	open	close						
2SGJ-BV-0056	Cold Reheat Stm Trap- Inlet	M2071	1	204-B	1	open	close						
2SGJ-BV-0057	Cold Reheat Stm Trap- Outlet	M2071	1	204-B	1	open	close						
2TEC-BV-0027	LP Heater 2 Extr Drain	M2075	1	NW corner of cond	3	open	close						
2TEC-BV-0031	LP Heater 2 Extr Drain	M2075	1	bottom row	3	open	close						
2TEC-BV-0035	LP Heater 3 Extr Drain	M2075	1	"	3	open	close						
2TEC-BV-0039	LP Heater 3 Extr Drain	M2075	1	"	3	open	close						
2TEC-BV-0043	LP Heater 4 Extr Drain	M2075	1	"	3	open	close						
2TEC-BV-0047	LP Heater 4 Extr Drain	M2075	1	"	3	open	close						
2TEC-BV-0003	LP Heater 2 Extr Drain	M2075	1	NE corner of cond	3	open	close						
2TEC-BV-0007	LP Heater 2 Extr Drain	M2075	1	"	3	open	close						
2TEC-BV-0011	LP Heater 3 Extr Drain	M2075	1	"	3	open	close						
2TEC-BV-0015	LP Heater 3 Extr Drain	M2075	1	"	3	open	close						
2TEC-BV-0019	LP Heater 4 Extr Drain	M2075	1	"	3	open	close						
2TEC-BV-0023	LP Heater 4 Extr Drain	M2075	1	"	3	open	close						
2TEC-BV-0051	LP Heater 2 Extr Drain	M2075	1	NW corner of cond	3	open	close						
2TEC-BV-0055	LP Heater 2 Extr Drain	M2075	1	top row	3	open	close						
2TEC-BV-0059	LP Heater 3 Extr Drain	M2075	1	"	3	open	close						
2TEC-BV-0063	LP Heater 3 Extr Drain	M2075	1	"	3	open	close						
2TEC-BV-0067	LP Heater 4 Extr Drain	M2075	1	"	3	open	close						
2TEC-BV-0071	LP Heater 4 Extr Drain	M2075	1	"	3	open	close						

IP70169653

TURBINE CYCLE PERFORMANCE TESTING | IGS Unit # 2 | Test # _____

***** CYCLE ISOLATION CHECKOFF SHEETS ***** | Date: _____ | Time: _____ | Name: _____

VALVE CLASSIFICATION: ** CRITICAL VALVE LIST**

Class 1*- CRITICAL VALVES- valves which are required to be opened immediately due to operational upset or unit trip

Class 1- Open valves just prior to test and standby, valves need to be opened at the end of each test

Class 2- Close valves up to 2 hours prior to each test (before Class I valves), re-open valves after Class I valves

Class 3- Close valves at the beginning of the day and open at the end of the day

Class NC- Non-Critical Valves- verify normally closed valves are closed (and not leaking) and normally opened valves are open

						VALVE POSITION		CHECKOFF with Initials				Downstream	
VALVE NUMBER	DESCRIPTION	P&ID	Floor	Location	CLASS	Normal	Test	Open	Close	Open	Close	Temp (F)	NOTES:
2HRA-BV-0019	Condensate Normal Drawoff	M2020	1	SW corner of condenser	1	open	close						
2HRA-BV-0020	Condensate Normal Drawoff	M2020	1	SW corner of condenser	1	open	close						
2TEE-BV-0015	Flash Tank Altrn Drain to Cndr	M2077	1	southwest of condenser	1*	open	close						
2TEE-BV-0022	Flash Tank Altrn Drain to Cndr	M2077	1	southwest of condenser	1*	open	close						
2TEE-BV-0011	LP Htr 3 Altr HLvl Drain	M2077	1	west of condenser	1*	open	close						
2TEE-BV-0019	LP Htr 3 Altr HLvl Drain	M2077	1	west of condenser	1*	open	close						
2TEE-BV-0013	LP Htr 2 Altr HLvl Drain	M2077	1	west of condenser	1*	open	close						
2TEE-BV-0021	LP Htr 2 Altr HLvl Drain	M2077	1	west of condenser	1*	open	close						
2PSA-BV-0082	Aux Stm Trap 5	M2008	1		2								
2FWD-BV-0121	Makeup to Regen Pumps	M2038B	1	Cond Polisher Regen Pumps	3								
2FWD-BV-0125	Makeup to Regen Pumps	M2038B	1	Cond Polisher Regen Pumps	3								
2TEE-BV-0009	LP Htr 4 Altr HLvl Drain	M2077	2	west of condenser	1*								
2TEE-BV-0017	LP Htr 4 Altr HLvl Drain	M2077	2	west of condenser	1*								
2FWC-BV-0026	Deaerator Recirc to Cond	M2037	2	west of condenser	1								
2FWC-BV-0027	Deaerator Recirc to Cond	M2037	2	west of condenser	1								
2FWC-MBV-0090	Deaerator Recirc to Cond	M2037	2	west of condenser	1								
2HRA-BV-0030	Condensate Normal Makeup	M2020	2	southwest of condenser	1								
2HRA-BV-0031	Condensate Normal Makeup	M2020	2	southwest of condenser	1								
2HRA-BV-0032	Condensate Normal Makeup	M2020	2	southwest of condenser	1								
2TGC-BV-0010	Main Stm Supply to Turb Seals	M2080A	2	west of M Stm Header	1*								
2FWA-BV-0388	HP Stop Valve 1B1 stem leakoff	M2035C	2	NW of Condenser	1								
2FWA-BV-0390	HP Stop Valve 1B1 seat drain	M2035C	2	NW of Condenser	1								
2FWA-BV-0391	HP Stop Valve 1A1 seat drain	M2035C	2	N of Condenser	1								
2SGJ-BV-0090	Cond to CRH Desuperhtr 2	M2071	2		1								
2HRB-BV-0109	Separator 1D Makeup Flow	M2021	2	Cond Vacuum Pump D	2								
2HRB-BV-0110	Separator 1C Makeup Flow	M2021	2	Cond Vacuum Pump C	2								
2HRB-BV-0111	Separator 1B Makeup Flow	M2021	2	Cond Vacuum Pump B	2								
2HRB-BV-0112	Separator 1A Makeup Flow	M2021	2	Cond Vacuum Pump A	2								
2TGC-BV-0058	Auxiliary Steam to Cold Reheat	M2080A	2	top of valve deck	1								
2SGG-BV-0058	Mn Stm Warming Line	M2069	2	NE of MCC 2A03	3								
2SGG-MBV-0009	Main Steam to BFPT 1A	M2069	3	NE of BFPT 1A	1								
2SGG-MBV-0010	Main Steam to BFPT 1B	M2069	3	SW of BFPT 1B	1								

IP7016654

2TGA-BV-0005	Exhaust Hood Spray Supply	M2079	3	by feedwater heater	1								
2TEF-BV-0163	LP Htr 3 Cont Vent to Cond	M2078B	3	LP Htr 3	2								
2TEF-BV-0077	HP Htr 6A Cont Vent to DA	M2078A	3	HP Htr 6A	2								
2TEF-BV-0080	HP Htr 6B Cont Vent to DA	M2078A	3	HP Htr 6B	2								

IP7016655

*** CYCLE ISOLATION CHECKOFF SHEETS ***

Date: Time: Name:

VALVE CLASSIFICATION: ** CRITICAL VALVE LIST**

Class 1*- CRITICAL VALVES- valves which are required to be opened immediately due to operational upset or unit trip

Class 1- Open valves just prior to test and standby, valves need to be opened at the end of each test

Class 2- Close valves up to 2 hours prior to each test (before Class I valves), re-open valves after Class I valves

Class 3- Close valves at the beginning of the day and open at the end of the day

Class NC- Non-Critical Valves- verify normally closed valves are closed (and not leaking) and normally opened valves are open

						VALVE POSITION		CHECKOFF with Initials				Downstream	
VALVE NUMBER	DESCRIPTION	P&ID	Floor	Location	CLASS	Normal	Test	Open	Close	Open	Close	Temp (F)	NOTES:
2SGF-BV-0065	Downcomer Drain Blowdown Manifol	M2068	2	S side of boiler									
2TEF-BV-0076	HP Htr 7A Cont Vent to DA	M2078A	5	HP Htr 7A	2								
2TEF-BV-0079	HP Htr 7B Cont Vent to DA	M2078A	5	HP Htr 7B	2								
2TEF-BV-0162	LP Htr 4 Cont Vent to Cond	M2078B	5	LP Htr 4	2								
2TEF-BV-0075	HP Htr 8A Cont Vent to DA	M2078A	6	HP Htr 8A	2								
2TEF-BV-0078	HP Htr 8B Cont Vent to DA	M2078A	6	HP Htr 8B	2								
2PSA-MBV-0017	Cold Reheat Supply to Aux Stm	M2008	9	behind east elevator	2								
2PSA-BV-0012	Cold Reheat Supply to Aux Stm	M2008	9	behind east elevator	2								
2PSA-BV-0014	Cold Reheat Supply to Aux Stm	M2008	9	behind east elevator	2								
2SGF-BV-0055	Lwr Conveyor Pass Header	M2068	10	east	3								
2SGF-BV-0057	Lwr Conveyor Pass Header	M2068	10	east	3								
2SGF-BV-0035	Lwr Conveyor Pass Header	M2068	10	west	3								
2SGF-BV-0028	Lwr Conveyor Pass Header	M2068	10	west	3								
2FWA-BV-0037	BFP 1A Recirc	M2035A	13	east	1*								
2FWA-BV-0038	BFP 1B Recirc	M2035A	13		1*								
2TEF-BV-0003	DA cont vents to atmos	M2078A	14	top of DA	2								
2TEF-BV-0007	DA cont vents to atmos	M2078A	14	top of DA	2								
2TEF-BV-00011	DA cont vents to atmos	M2078A	14	top of DA	2								
2SGF-BV-0041	Sec SH Outlet Header	M2068	15	west	3								
2SGF-BV-0043	Sec SH Intermed Header	M2068	15	west	3								
2SGF-BV-0045	Sec SH Intermed Header	M2068	15	west	3								
2SGF-BV-0049	Sec SH Platen Inlet Header	M2068	15	west	3								
2SGF-BV-0051	Roof Inlet Header	M2068	15	west	3								
2PSA-BV-0021	Aux Pegging Stm to Deaerator	M2008	15	N of east elevator	1*								
2PSA-BV-0022	Aux Pegging Stm to Deaerator	M2008	15	N of east elevator	1*								
2PSA-BV-0058	SSH to Aux Stm	M2008	17	west side	2								
2SGA-BV-0010	MStm Supply to Aux Stm Header	M2063A	17	west side	2								
2SGA-BV-0195	Steam Trap 2	M2063A			2								
2SGA-BV-0199	Steam Trap 3	M2063B	18										
2SGA-BV-0003	Cont Blowdown	M2063B	18	E end of the drum	2								
2SGA-MBV-0004	Cont Blowdown	M2063B	18	E end of the drum	2								
2SGA-MBV-0002	Stm Supply to Aux Stm	M2063B	18	S end of the drum	2								

IP7016656

2SGA-BV-0001	Stm Supply to Aux Stm	M2063B	18	S end of the drum	2								

IP7016657

TURBINE CYCLE PERFORMANCE TESTING | IGS Unit # 2 | Test # _____

***** CYCLE ISOLATION CHECKOFF SHEETS ***** | Date: _____ | Time: _____ | Name: _____

VALVE CLASSIFICATION: ** CRITICAL VALVE LIST**

Class 1*- CRITICAL VALVES- valves which are required to be opened immediately due to operational upset or unit trip

Class 1- Open valves just prior to test and standby, valves need to be opened at the end of each test

Class 2- Close valves up to 2 hours prior to each test (before Class I valves), re-open valves after Class I valves

Class 3- Close valves at the beginning of the day and open at the end of the day

Class NC- Non-Critical Valves- verify normally closed valves are closed (and not leaking) and normally opened valves are open

						VALVE POSITION		CHECKOFF with Initials				Downstream	
VALVE NUMBER	DESCRIPTION	P&ID	Floor	Location	CLASS	Normal	Test	Open	Close	Open	Close	Temp (F)	NOTES:
2SAC-BV-0017	Sample 1 Makeup to Cond	M2054A	1	Water Lab	2								
2SAC-BV-0030	Sample 1 Makeup to Cond	M2054A	1	Water Lab	2								
2SAC-BV-0019	Sample 3 Demin 1A Outlet	M2054A	1	Water Lab	2								
2SAC-BV-0032	Sample 3 Demin 1A Outlet	M2054A	1	Water Lab	2								
2SAC-BV-0020	Sample 4 Demin 1B Outlet	M2054A	1	Water Lab	2								
2SAC-BV-0033	Sample 4 Demin 1B Outlet	M2054A	1	Water Lab	2								
2SAC-BV-0021	Sample 5 Demin 1C Outlet	M2054A	1	Water Lab	2								
2SAC-BV-0034	Sample 5 Demin 1C Outlet	M2054A	1	Water Lab	2								
2SAC-BV-0022	Sample 6 Demin 1D Outlet	M2054A	1	Water Lab	2								
2SAC-BV-0035	Sample 6 Demin 1D Outlet	M2054A	1	Water Lab	2								
2SAC-BV-0023	Sample 7 Cond Polisher Outlet	M2054A	1	Water Lab	2								
2SAC-BV-0036	Sample 7 Cond Polisher Outlet	M2054A	1	Water Lab	2								
2SAC-BV-0001	Smpl 8 Cond after Gland Cond	M2054A	1	Water Lab	2								
2SAC-BV-0002	Sample 9 DA Inlet	M2054A	1	Water Lab	2								
2SAC-BV-0024	Sample 9 DA Inlet	M2054A	1	Water Lab	2								
2SAC-BV-0037	Sample 9 DA Inlet	M2054A	1	Water Lab	2								
2SAC-BV-0026	Sample 11 Econ Inlet	M2054A	1	Water Lab	2								
2SAC-BV-0039	Sample 11 Econ Inlet	M2054A	1	Water Lab	2								
2SAC-BV-0003	Sample 13 Satuated Steam	M2054A	1	Water Lab	2								
2SAC-BV-0004	Sample 14 Main Steam	M2054A	1	Water Lab	2								
2SAC-BV-0028	Sample 14 Main Steam	M2054A	1	Water Lab	2								
2SAC-BV-0041	Sample 14 Main Steam	M2054A	1	Water Lab	2								

IP70166658

TURBINE CYCLE PERFORMANCE TESTING	IGS Unit # 2	Test # _____
*** CYCLE ISOLATION CHECKOFF SHEETS ***	Date: _____	Time: _____ Name: _____

VALVE CLASSIFICATION:

Class I*- CRITICAL VALVES- valves which are required to be opened immediately due to operational upset or unit trip

Class I- Open valves just prior to test and standby, valves need to be opened at the end of each test

Class II- Close valves up to 2 hours prior to each test (before Class I valves), re-open valves after Class I valves

Class III- Close valves at the beginning of the day and open at the end of the day

Class IV- Non-Critical Valves- verify normally closed valves are closed (and not leaking) and normally opened valves are open

LOCATION: CONDENSER CONNECTIONS- EAST BASEMENT

			LOCATION					VALVE POSITION		CHECKOFF		Downstream	
VALVE NUMBER	DESCRIPTION	P&ID	Floor	Near	Area	Termintaion Point	CLASS	Normal	Test	Initials		Temp (F)	NOTES:
TGC-BV-65	Drain from TDV to Htr	M2080A	2	ss-plat	Diag A #1	Cond TB end bsmt						____F	
TGC-BV-67	Drain from TDV to Htr	M2080A	2	ss-plat	Diag A #1	Cond TB end bsmt						____F	
FWA-MBV-189	Wrmup Drain from FW to Htr 6	M2035A			Diag A #2	Cond TB end bsmt						____F	
TGC-MBV-31	RHT bowl drain to cond	M2080B	1	s-ehc	Diag A #3	Cond TB end bsmt						____F	
TGC-MBV-37	Control Valve drain to cond.	M2080B	2	convlvs	Diag A #4	Cond TB end bsmt						____F	
TGC-MBV-39	Control Valve drain to cond.	M2080B	2	convlvs	Diag A #5	Cond TB end bsmt						____F	
TGC-MBV-40	Control Valve drain to cond.	M2080B	2	convlvs	Diag A #6	Cond TB end bsmt						____F	
TGC-MBV-33	Stop Valve drain to cond	M2080B	2	stpvlvs	Diag A #7	Cond TB end bsmt						____F	
TGC-MBV-34	Stop Valve drain to cond	M2080B	2	stpvlvs	Diag A #8	Cond TB end bsmt						____F	
TGC-MBV-36	Stop Valve drain to cond	M2080B	2	stpvlvs	Diag A #9	Cond TB end bsmt						____F	
TGC-MBV-35	Stop Valve drain to cond	M2080B	2	stpvlvs	Diag A #10	Cond TB end bsmt						____F	
TGC-MBV-32	RHT bowl drain to cond	M2080B	1	s-ehc	Diag A #11	Cond TB end bsmt						____F	
SGJ-MBV-18	CRH low point drains	M2071	1	s-ehc	Diag A #12	Cond TB end bsmt						____F	
SGJ-MBV-14	HRH low point drains	M2071	1	s-ehc	Diag A #13	Cond TB end bsmt						____F	
SGJ-MBV-16	HRH low point drains	M2071	1	s-ehc	Diag A #13	Cond TB end bsmt						____F	
SGG-MBV-25	MS Byp to cond low pt drain	M2069	2	ne-cond	Diag A #14	Cond TB end bsmt						____F	
TGC-MBV-38	Control Valve drain to cond	M2080B	2	convlvs	Diag A #15	Cond TB end bsmt						____F	
TGC-MBV-49	MS lead drain to cond	M2080	1	sw-ehc	Diag A #16	Cond TB end bsmt						____F	
TGC-ACV-4	TDV to cond	M2080A	2.5	stmslplt	Diag A #17	Cond TB end bsmt						____F	
TGA-ABV-20	Equalizer valve	M2079	2		Diag A #18	Cond TB end bsmt						____F	
TED-ACV-11	Htr 6A hi level dump	M2076	1	e-cond	Diag A #20	Cond TB end bsmt						____F	
TED-ACV-12	Htr 6B hi level dump	M2076	1	e-cond	Diag A #21	Cond TB end bsmt						____F	
TED-ACV-3	Htr 8A hi level dump	M2076	1	e-cond	Diag A #22	Cond TB end bsmt						____F	
TED-ACV-4	Htr 8B hi level dump	M2076	1	e-cond	Diag A#24	Cond TB end bsmt						____F	
TED-ACV-8	Htr 7B hi level dump	M2076	1	e-cond	Diag A#25	Cond TB end bsmt						____F	
TGC-ORF-8	SSH low point drain	M2080A	1		Diag A#26	Cond TB end bsmt						____F	
TED-ACV-7	Htr 7A hi level dump	M2076	1	e-cond	Diag A#27	Cond TB end bsmt						____F	
TEC-ACV-146	Drn frm LPextr stm to BFPT A	M2075	1	e-cond	Diag A#28	Cond TB end bsmt						____F	

LOCATION: HP DRAIN HEADER

			LOCATION					VALVE POSITION		CHECKOFF		Downstream	
VALVE NUMBER	DESCRIPTION	P&ID	Floor	Near	Area	Termintaion Point	CLASS	Normal	Test	Initials		Temp (F)	NOTES:
SGI-MBV-178	Air heater sootblowers drain	M2070	1	E-EHC	DiagB1#1	HP Drain Header						____F	
SGI-MBV-35	Boiler sootblowers drain	M2070	1	E-EHC	DiagB1#2	HP Drain Header						____F	
TEC-ACV-14	4th stg extr (drain) to HTR 8A & 8	M2075	1	E-EHC	DiagB1#3	HP Drain Header						____F	

IP7016659

TEC-ACV-80	4th stg extr (drain) to HTR 8A	M2075	1	E-EHC	DiagB1#4	HP Drain Header						F	
TEC-ACV-140	14th stg extr (drain) to BFPT 1B	M2075	1	E-EHC	DiagB1#5	HP Drain Header						F	
TEC-ACV-128	14th stg extr (drain) to DA	M2075	1	E-EHC	DiagB1#6	HP Drain Header						F	
TEC-ACV-116	14th stg extr (drain) to DA	M2075	1	E-EHC	DiagB1#7	HP Drain Header						F	
TEC-ACV-86	4th stg extr (drain) to HTR 8B	M2075	1	E-EHC	DiagB1#8	HP Drain Header						F	
TEC-ACV-92	11th stg extr (drain) to HTR 6A&B	M2075	1	E-EHC	DiagB1#9	HP Drain Header						F	
TEC-ACV-98	11th stg extr (drain) to HTR 6A	M2075	1	E-EHC	DiagB1#10	HP Drain Header						F	
TEC-ACV-101	11th stg extr (drain) to HTR 6B	M2075	1	E-EHC	DiagB1#11	HP Drain Header						F	
TEC-ACV-134	14th stg extr (drain) to BFPT 1A	M2075	1	E-EHC	DiagB1#12	HP Drain Header						F	
TEC-ACV-122	14th stg extr (drain) to BFPT 1A&	M2075	1	E-EHC	DiagB1#13	HP Drain Header						F	
TEC-ACV-110	14th stg extr (drain) to DA	M2075	1	E-EHC	DiagB1#14	HP Drain Header						F	
PSA-ORF-1	Aux Stm Hdr orificed drain line	M2008	1	S-EHC	DiagB1#15	HP Drain Header						F	
LOCATION: LP DRAIN HEADER													
					LOCATION			VALVE POSITION		CHECKOFF		Downstream	
VALVE NUMBER	DESCRIPTION	P&ID	Floor	Near	Area	Termintaion Point	CLASS	Normal	Test	Initials		Temp (F)	NOTES:
TEC-ACV-2	HTR 2 extr from A hood (drain)	M2075	1	ne-cond	DiagB2#1	LP Drain Header						F	
TEC-ACV-6	HTR 2 extr from A hood (drain)	M2075	1	ne-cond	DiagB2#2	LP Drain Header						F	
TEC-ACV-10	HTR 3 extr from A hood (drain)	M2075	1	ne-cond	DiagB2#3	LP Drain Header						F	
TEC-ACV-14	HTR 3 extr from A hood (drain)	M2075	1	ne-cond	DiagB2#4	LP Drain Header						F	
TEC-ACV-18	HTR 4 extr from A hood (drain)	M2075	1	ne-cond	DiagB2#5	LP Drain Header						F	
TEC-ACV-22	HTR 4 extr from A hood (drain)	M2075	1	ne-cond	DiagB2#6	LP Drain Header						F	
TEC-ACV-50	Extr to HTR 2 from C hood drain	M2075	1	nw-cond	DiagB3#1	LP Drain Header						F	

IP7016660

TEC-ACV-54	Extr to HTR 2 from C hood drain	M2075	1	nw-cond	DiagB3#2	LP Drain Header						F	
TEC-ACV-58	Extr to HTR3 from C hood drain	M2075	1	nw-cond	DiagB3#3	LP Drain Header						F	
TEC-ACV-62	Extr to HTR3 from C hood drain	M2075	1	nw-cond	DiagB3#4	LP Drain Header						F	
TEC-ACV-66	Extr to HTR 4 from C hood drain	M2075	1	nw-cond	DiagB3#5	LP Drain Header						F	
TEC-ACV-70	Extr to HTR 4 from C hood drain	M2075	1	nw-cond	DiagB3#6	LP Drain Header						F	
TEC-ACV-26	Extr to HTR 2 from B hood drain	M2075	1	nw-cond	DiagB3#7	LP Drain Header						F	
TEC-ACV-30	Extr to HTR 2 from B hood drain	M2075	1	nw-cond	DiagB3#8	LP Drain Header						F	
TEC-ACV-34	Extr to HTR 3 from B hood drain	M2075	1	nw-cond	DiagB3#9	LP Drain Header						F	
TEC-ACV-38	Extr to HTR 3 from B hood drain	M2075	1	nw-cond	DiagB3#10	LP Drain Header						F	
TEC-ACV-42	Extr to HTR 4 from B hood drain	M2075	1	nw-cond	DiagB3#11	LP Drain Header						F	
TEC-ACV-46	Extr to HTR 4 from B hood drain	M2075	1	nw-cond	DiagB3#12	LP Drain Header						F	

LOCATION: CONDENSER CONNECTIONS-NORTH MEZZANINE

			LOCATION					VALVE POSITION		CHECKOFF		Downstream	
VALVE NUMBER	DESCRIPTION	P&ID	Floor	Near	Area	Termintaion Point	CLASS	Normal	Test	Initials		Temp (F)	NOTES:
FWA-ABV-303	BFPT "A" HP Stop Vlv Drain	M2035C	2	N-cond	Diag C #6	dwncmr drns hdr						F	
FWA-ABV-309	BFPT"A"LP stp vlv below stdr	M2035C	2	N-cond	Diag C #7	Cond-A NorthMez						F	
FWA-ABV-305	BFPT"A" HP Stop Valve Drain	M2035C	2	N-cond	Diag C #8	Cond-A NorthMez						F	
FWA-ABV-311	BFPT"A" First Stage Drain	M2035C	2	ne-cnd	Diag C #9	Cond-A NorthMez						F	
TEF-BV-162	HTR 4 Vent to Condenser	M2078B	5	HTR4	Diag C #10	Cond-North Mezz						F	
TEF-BV-163	HTR 3 Vent to Condenser	M2078B	3	HTR3	Diag C #11	Cond-North Mezz						F	
TEF-BV-164	HTR 2 Vent to Condenser	M2078B	2	HTR2	Diag C #12	Cond-North Mezz						F	
FWA-ABV-312	BFPT"B" First Stage Drain	M2035C	2	nw-cnd	Diag C #13	Cond-C NorthMez						F	
FWA-ABV-306	BFPT"B" HP Stop Valve Drain	M2035C	2	N-cond	Diag C #14	Cond-C NorthMez						F	
FWA-ABV-310	BFPT"B"LP stpvlv below st dr	M2035C	2	N-cond	Diag C #15	Cond-C NorthMez						F	
FWA-ABV-304	BFPT"B" HP Stop Valve Drain	M2035C	2	N-cond	Diag C #16	dwncmr drns hdr						F	

LOCATION: CONDENSER CONNECTIONS-NORTH BASEMENT (check on mezzanine level)

			LOCATION					VALVE POSITION		CHECKOFF		Downstream	
VALVE NUMBER	DESCRIPTION	P&ID	Floor	Near	Area	Termintaion Point	CLASS	Normal	Test	Initials		Temp (F)	NOTES:
TGC-ORF-11	Steam Seal Hdr Low Point Drain	M2080A	2	N-cond	A-cond	Cond-A North Basemt						F	
FWA-ABV-307	BFPT 1A Stpvlv above seat drn	M2035C	2	N-cond	A-cond	Cond-A North Basemt						F	
FWA-ABV-308	BFPT 1B Stpvlv above seat drn	M2035C	2	N-cond	C-cond	Cond-C North Basemt						F	

IP7016661

LOCATION: WEST SIDE BOILER DRAINS

VALVE NUMBER	DESCRIPTION	P&ID	LOCATION Floor	Near	Area	Termintaion Point	CLASS	VALVE POSITION Normal	Test	CHECKOFF Initials		Downstream Temp (F)	NOTES:
SGF-MBV-52	Roof Inlet header drain	M2068	4	fdr dck	west boiler	W boil drn bldwn hdr						F	
SGF-MBV-50	Sec SH Platen inlet drain header	M2068	4	fdr dck	west boiler	W boil drn bldwn hdr						F	
SGF-BV-48	Economizer discharge header drn	M2068	4	fdr dck	west boiler	W boil drn bldwn hdr						F	
SGF-MBV-46	Sec SH Intermediate inlet hdr drain	M2068	4	fdr dck	west boiler	W boil drn bldwn hdr						F	
SGF-MBV-44	Sec SH Intermediate inlet hdr drain	M2068	4	fdr dck	west boiler	W boil drn bldwn hdr						F	
PSA-TRP-16	Aux stm from drum and SSH stm t	M2008	14	S-boiler	south boiler	RH outlet bldwn hdr						F	
SGA-TRP-02	Main stm to Aux stm hdr drain trap	M2063A	16	Wboiler	west boiler	Mn Stm drip pkt drn						F	
SGF-BV-40	Reheater outlet header drain	M2068	4	fdr dck	west boiler	RH outlet hdr bldwn						F	
SGF-BV-38	Reheater outlet header drain	M2068	4	fdr dck	west boiler	RH outlet hdr bldwn						F	
SGF-MBV-36	Lower convect pass hdr drain	M2068	4	fdr dck	west boiler	W boil drn bldwn hdr						F	
SGF-BV-34	Reheater inlet header drain	M2068	4	fdr dck	west boiler	W boil drn bldwn hdr						F	
SGF-BV-31	Economizer inlet header drain	M2068	4	fdr dck	west boiler	W boil drn bldwn hdr						F	
SGA-BV-19	Drum level gage drain	M2063B	18	W-Drum	west boiler	W boil drn bldwn hdr						F	
SGA-BV-26	Drum level gage drain	M2063B	18	W-Drum	west boiler	W boil drn bldwn hdr						F	
SGF-MBV-29	Lower convect pass hdr drain	M2068	4	fdr dck	west boiler	W boil drn bldwn hdr						F	
SGF-MBV-42	Sec SH outlet header drain	M2068	4	fdr dck	west boiler	Blowdown Tank 1						F	
SGA-BV-32	Drum steam pressure gage drain	M2063B	18	W-Drum	west boiler	W boil drn bldwn hdr						F	

LOCATION: EAST SIDE BOILER DRAINS

VALVE NUMBER	DESCRIPTION	P&ID	LOCATION Floor	Near	Area	Termintaion Point	CLASS	VALVE POSITION Normal	Test	CHECKOFF Initials		Downstream Temp (F)	NOTES:
SGA-TRP-03	Drum to Aux stm drain stm trp	M2063B	18	S-boiler	east boiler	E boil drn bldwn hdr						F	
SGF-BV-54	Economizer discharge header drn	M2068	4	sub-fdr	east boiler	E boil drn bldwn hdr						F	
SGF-MBV-56	Lower convect pass hdr drain	M2068	4	sub-fdr	east boiler	E boil drn bldwn hdr						F	
SGF-MBV-58	Lower convect pass hdr drain	M2068	4	sub-fdr	east boiler	E boil drn bldwn hdr						F	
SGA-MBV-4	Drum continuous blowdown	M2068	18	E-drum	east boiler	E boil drn bldwn hdr						F	
PSA-TRP-01	Cold Reheat Aux Steam Supply	M2008	8	SE-boil	east elev	E boil drn bldwn hdr						F	

LOCATION: MAIN STEAM DRIP POCKET

VALVE NUMBER	DESCRIPTION	P&ID	LOCATION Floor	Near	Area	Termintaion Point	CLASS	VALVE POSITION Normal	Test	CHECKOFF Initials		Downstream Temp (F)	NOTES:
SGG-MBV-11	Main Steam to Blowdown Tank	M2069	2	SE-boil	NE-SV&CV	Blowdown Tank						F	
SGG-MBV-12	Main Steam to Blowdown Tank	M2069	2	SE-boil	NE-SV&CV	Blowdown Tank						F	
SGG-MBV-13	Main Steam to Blowdown Tank	M2069	2	SE-boil	NE-SV&CV	Blowdown Tank						F	
SGG-MBV-14	Main Steam to Blowdown Tank	M2069	2	SE-boil	NE-SV&CV	Blowdown Tank						F	

LOCATION: DOWNCOMER DRAINS

VALVE NUMBER	DESCRIPTION	P&ID	LOCATION Floor	Near	Area	Termintaion Point	CLASS	VALVE POSITION Normal	Test	CHECKOFF Initials		Downstream Temp (F)	NOTES:
SGF-BV-59	Drum West End Downcomer	M2068	2	S-boiler	N of Htr 2	DwncmDrnBldnHdr						F	
SGF-BV-60	Drum West End Downcomer	M2068	2	S-boiler	N of Htr 2	DwncmDrnBldnHdr						F	
SGF-BV-61	Drum West Shell Downcomer	M2068	2	S-boiler	N of Htr 2	DwncmDrnBldnHdr						F	

IP7016662

SGF-BV-62	Drum West Shell Downcomer	M2068	2	S-boiler	N of Htr 2	DwncmDrnBldnHdr						F	
SGF-MBV-66	Downcomer Drain Manifold Drain	M2068	2	S-boiler	N of Htr 2	DwncmDrnBldnHdr						F	
SGF-BV-63	Drum Center Shell Downcomer	M2068	2	S-boiler	N of Htr 2	DwncmDrnBldnHdr						F	
SGF-BV-64	Drum Center Shell Downcomer	M2068	2	S-boiler	N of Htr 2	DwncmDrnBldnHdr						F	
SGF-BV-67	Drum East Shell Downcomer	M2068	2	S-boiler	N of Htr 2	DwncmDrnBldnHdr						F	
SGF-BV-68	Drum East Shell Downcomer	M2068	2	S-boiler	N of Htr 2	DwncmDrnBldnHdr						F	
SGF-BV-69	Drum East End Downcomer	M2068	2	S-boiler	N of Htr 2	DwncmDrnBldnHdr						F	
SGF-BV-70	Drum East End Downcomer	M2068	2	S-boiler	N of Htr 2	DwncmDrnBldnHdr						F	

LOCATION: SUPERHEAT BYPASS

			LOCATION					VALVE POSITION		CHECKOFF		Downstream	
VALVE NUMBER	DESCRIPTION	P&ID	Floor	Near	Area	Termintaion Point	CLASS	Normal	Test	Initials		Temp (F)	NOTES:
SGA-TRP-1	Superheat Bypass Drain Trap	M2063A	12	NW-boil	NW corner	Partial Byp Drn Cnd						F	
SGA-ACV-137	Superheat Bypass	M2063A	2	W-Cond	NW corner	C Condenser-West						F	

LOCATION: MISCELLANEOUS VALVES

			LOCATION					VALVE POSITION		CHECKOFF		Downstream	
VALVE NUMBER	DESCRIPTION	P&ID	Floor	Near	Area	Termintaion Point	CLASS	Normal	Test	Initials		Temp (F)	NOTES:
FWA-BV-299	Bootstrap Valve	M2035A	2	SW-boil	SW Htr 2							F	
FWC-ACV-28	DEA Recirc	M2037	2	W-Cond	NW corner	C Condenser-West						F	
TEC-ACV-152	1B BFPT Extraction Drain	M2075	2	W-Cond	NW corner	Cond-Basement						F	

LOCATION: VACUUM PUMPS

			LOCATION					VALVE POSITION		CHECKOFF		Downstream	
VALVE NUMBER	DESCRIPTION	P&ID	Floor	Near	Area	Termintaion Point	CLASS	Normal	Test	Initials		Temp (F)	NOTES:
HRB-P-1A	1A Vacuum Pump	M2021	2	SE-Boil	East Elevtr							F	
HRB-P-1B	1B Vacuum Pump	M2021	2	SE-Boil	East Elevtr							F	
HRB-P-1C	1C Vacuum Pump	M2021	2	SE-Boil	East Elevtr							F	
HRB-P-1D	1D Vacuum Pump	M2021	2	SE-Boil	East Elevtr							F	

LOCATION:

			LOCATION					VALVE POSITION		CHECKOFF		Downstream	
VALVE NUMBER	DESCRIPTION	P&ID	Floor	Near	Area	Termintaion Point	CLASS	Normal	Test	Initials		Temp (F)	NOTES:
TGA-ABV-2	Ventilator Valve	M2079	2	CV's	E A Cond	Atm - roof vents						F	
FWA-PS-70	BFP 1A Inlet Strainer DP	M2035A	2	N-Cond	BFPT Exh							F	
FWA-PS-71	BFP 1B Inlet Strainer DP	M2035A	2	N-Cond	BFPT Exh							F	
SGI-ABV-21	AH Soot Blower Drain	M2070	3	NE-Boil	Stairs	Cond						F	
SGI-ABV-22	AH Soot Blower Drain	M2070	3	NW-Boil	Stairs	Cond						F	
SGI-ABV-170	Boiler Soot Blower Drain	M2070	7	W-Boil		Cond						F	
SGI-ABV-171	Boiler Soot Blower Drain	M2070	7	E-Boil		Cond						F	
SGI-ABV-172	Boiler Soot Blower Drain	M2070	11	E-Boil	Backpass	Cond						F	
SGI-ABV-173	Boiler Soot Blower Drain	M2070	11	W-Boil	Backpass	Cond						F	
SGA-MBV-173	Economizer Recirc	M2063A	10.5	W-Boil	Backpass	Economizer inlet						F	
SGA-MBV-174	Economizer Recirc	M2063A	10.5	E-Boil	Backpass	Economizer inlet						F	

IP7016663

SGG-MCV-18	Main Steam Warming Line	M2069	2	E-CV'S		Cond						F	
SGG-MBV-25	Main Steam Line Drain	M2069	2	E-CV'S		Cond						F	
SGG-MBV-26	Main Steam Line Drain	M2069	2	E-CV'S		Cond						F	
SGG-MBV-55	Main Steam to BFPT Drain	M2069	2	E-CV'S		Cond						F	
SGG-MBV-56	Main Steam to BFPT Drain	M2069	2	E-CV'S		Cond						F	
PSA-ACV-60	Drum Aux Steam Supply	M2008	17	S-Boil		Aux						F	
PSA-ACV-57	SSH Aux Steam Supply	M2008	17	W-Boil		Aux						F	

IP7016664

Day 2 - Test 4 Vwd 2300

IP7016665

TURBINE CYCLE PERFORMANCE TESTING | IGS Unit # 2 | Test # 3

***** CYCLE ISOLATION CHECKOFF SHEETS ***** | Date: 4/9/02 | Time: 10:36 | Name: Blass / Spence

VALVE CLASSIFICATION:

Class I*- CRITICAL VALVES- valves which are required to be opened immediately due to operational upset or unit trip

Class I- Open valves just prior to test and standby, valves need to be opened at the end of each test

Class II- Close valves up to 2 hours prior to each test (before Class I valves), re-open valves after Class I valves

Class III- Close valves at the beginning of the day and open at the end of the day

Class IV- Non-Critical Valves- verify normally closed valves are closed (and not leaking) and normally opened valves are open

Exceptions noted

LOCATION: CONDENSER CONNECTIONS- EAST BASEMENT

VALVE NUMBER	DESCRIPTION	P&ID	LOCATION Floor	Near	Area	Termintaion Point	CLASS	VALVE POSITION Normal	Test	CHECKOFF Initials		Downstream Temp (F)	NOTES:
TGC-BV-65	Drain from TDV to Htr	M2080A	2	ss-plat	Diag A #1	Cond TB end bsmt						141 F	
TGC-BV-67	Drain from TDV to Htr	M2080A	2	ss-plat	Diag A #1	Cond TB end bsmt						F	
FWA-MBV-189	Wrmup Drain from FW to Htr 6	M2035A			Diag A #2	Cond TB end bsmt						F	
TGC-MBV-31	RHT bowl drain to cond	M2080B	1	s-ehc	Diag A #3	Cond TB end bsmt						F	
TGC-MBV-37	Control Valve drain to cond.	M2080B	2	convlvs	Diag A #4	Cond TB end bsmt						F	
TGC-MBV-39	Control Valve drain to cond.	M2080B	2	convlvs	Diag A #5	Cond TB end bsmt						F	
TGC-MBV-40	Control Valve drain to cond.	M2080B	2	convlvs	Diag A #6	Cond TB end bsmt						F	
TGC-MBV-33	Stop Valve drain to cond	M2080B	2	stpvlvs	Diag A #7	Cond TB end bsmt						F	
TGC-MBV-34	Stop Valve drain to cond	M2080B	2	stpvlvs	Diag A #8	Cond TB end bsmt						F	
TGC-MBV-36	Stop Valve drain to cond	M2080B	2	stpvlvs	Diag A #9	Cond TB end bsmt						F	
TGC-MBV-35	Stop Valve drain to cond	M2080B	2	stpvlvs	Diag A #10	Cond TB end bsmt						F	
TGC-MBV-32	RHT bowl drain to cond	M2080B	1	s-ehc	Diag A #11	Cond TB end bsmt						F	
SGJ-MBV-18	CRH low point drains	M2071	1	s-ehc	Diag A #12	Cond TB end bsmt						F	
SGJ-MBV-14	HRH low point drains	M2071	1	s-ehc	Diag A #13	Cond TB end bsmt						F	
SGJ-MBV-16	HRH low point drains	M2071	1	s-ehc	Diag A #13	Cond TB end bsmt						F	
SGG-MBV-25	MS Byp to cond low pt drain	M2069	2	ne-cond	Diag A #14	Cond TB end bsmt						F	
TGC-MBV-38	Control Valve drain to cond	M2080B	2	convlvs	Diag A #15	Cond TB end bsmt						F	
TGC-MBV-49	MS lead drain to cond	M2080	1	sw-ehc	Diag A #16	Cond TB end bsmt						F	
TGC-ACV-4	TDV to cond	M2080A	2.5	stmslplt	Diag A #17	Cond TB end bsmt						336 F	
TGA-ABV-20	Equalizer valve	M2079	2		Diag A #18	Cond TB end bsmt						F	
TED-ACV-11	Htr 6A hi level dump	M2076	1	e-cond	Diag A #20	Cond TB end bsmt						F	
TED-ACV-12	Htr 6B hi level dump	M2076	1	e-cond	Diag A #21	Cond TB end bsmt						F	
TED-ACV-3	Htr 8A hi level dump	M2076	1	e-cond	Diag A #22	Cond TB end bsmt						F	
TED-ACV-4	Htr 8B hi level dump	M2076	1	e-cond	Diag A#24	Cond TB end bsmt						322 F	?? TED-BV-21
~~TED-ACV-8~~	Htr 7B hi level dump	M2076	1	e-cond	Diag A#25	Cond TB end bsmt						F	
TGC-ORF-8	SSH low point drain	M2080A	1		Diag A#26	Cond TB end bsmt						F	
TED-ACV-7	Htr 7A hi level dump	M2076	1	e-cond	Diag A#27	Cond TB end bsmt						F	
TEC-ACV-146	Drn frm LPextr stm to BFPT A	M2075	1	e-cond	Diag A#28	Cond TB end bsmt						F	

LOCATION: HP DRAIN HEADER

VALVE NUMBER	DESCRIPTION	P&ID	LOCATION Floor	Near	Area	Termintaion Point	CLASS	VALVE POSITION Normal	Test	CHECKOFF Initials		Downstream Temp (F)	NOTES:
SGI-MBV-178	Air heater sootblowers drain	M2070	1	E-EHC	DiagB1#1	HP Drain Header						F	
SGI-MBV-35	Boiler sootblowers drain	M2070	1	E-EHC	DiagB1#2	HP Drain Header						F	
TEC-ACV-14	4th stg extr (drain) to HTR 8A & 8	M2075	1	E-EHC	DiagB1#3	HP Drain Header						F	

IP7016666

TEC-ACV-80	4th stg extr (drain) to HTR 8A	M2075	1	E-EHC	DiagB1#4	HP Drain Header						F	
TEC-ACV-140	14th stg extr (drain) to BFPT 1B	M2075	1	E-EHC	DiagB1#5	HP Drain Header						F	
TEC-ACV-128	14th stg extr (drain) to DA	M2075	1	E-EHC	DiagB1#6	HP Drain Header						200 F	~~180~~ 130
TEC-ACV-116	14th stg extr (drain) to DA	M2075	1	E-EHC	DiagB1#7	HP Drain Header						F	
TEC-ACV-86	4th stg extr (drain) to HTR 8B	M2075	1	E-EHC	DiagB1#8	HP Drain Header						F	
TEC-ACV-92	11th stg extr (drain) to HTR 6A&B	M2075	1	E-EHC	DiagB1#9	HP Drain Header						F	
TEC-ACV-98	11th stg extr (drain) to HTR 6A	M2075	1	E-EHC	DiagB1#10	HP Drain Header						297 F	Trap disch ~~F~~ 10 BV-100
TEC-ACV-101	11th stg extr (drain) to HTR 6B	M2075	1	E-EHC	DiagB1#11	HP Drain Header						F	
TEC-ACV-134	14th stg extr (drain) to BFPT 1A	M2075	1	E-EHC	DiagB1#12	HP Drain Header						F	
TEC-ACV-122	14th stg extr (drain) to BFPT 1A&	M2075	1	E-EHC	DiagB1#13	HP Drain Header						200 F	~~180~~ BV 124
TEC-ACV-110	14th stg extr (drain) to DA	M2075	1	E-EHC	DiagB1#14	HP Drain Header						F	
PSA-ORF-1	Aux Stm Hdr orificed drain line	M2008	1	S-EHC	DiagB1#15	HP Drain Header						F	

WOR 98225
5 traps

LOCATION: LP DRAIN HEADER

			LOCATION					VALVE POSITION		CHECKOFF		Downstream	
VALVE NUMBER	DESCRIPTION	P&ID	Floor	Near	Area	Termintaion Point	CLASS	Normal	Test	Initials		Temp (F)	NOTES:
TEC-ACV-2	HTR 2 extr from A hood (drain)	M2075	1	ne-cond	DiagB2#1	LP Drain Header						F	
TEC-ACV-6	HTR 2 extr from A hood (drain)	M2075	1	ne-cond	DiagB2#2	LP Drain Header						F	
TEC-ACV-10	HTR 3 extr from A hood (drain)	M2075	1	ne-cond	DiagB2#3	LP Drain Header						F	
TEC-ACV-14	HTR 3 extr from A hood (drain)	M2075	1	ne-cond	DiagB2#4	LP Drain Header						F	
TEC-ACV-18	HTR 4 extr from A hood (drain)	M2075	1	ne-cond	DiagB2#5	LP Drain Header						F	
TEC-ACV-22	HTR 4 extr from A hood (drain)	M2075	1	ne-cond	DiagB2#6	LP Drain Header						F	
TEC-ACV-50	Extr to HTR 2 from C hood drain	M2075	1	nw-cond	DiagB3#1	LP Drain Header						F	

IP7016667

TEC-ACV-54	Extr to HTR 2 from C hood drain	M2075	1	nw-cond	DiagB3#2	LP Drain Header						____F	
TEC-ACV-58	Extr to HTR3 from C hood drain	M2075	1	nw-cond	DiagB3#3	LP Drain Header						____F	
TEC-ACV-62	Extr to HTR3 from C hood drain	M2075	1	nw-cond	DiagB3#4	LP Drain Header						____F	
TEC-ACV-66	Extr to HTR 4 from C hood drain	M2075	1	nw-cond	DiagB3#5	LP Drain Header						____F	
TEC-ACV-70	Extr to HTR 4 from C hood drain	M2075	1	nw-cond	DiagB3#6	LP Drain Header						____F	
TEC-ACV-26	Extr to HTR 2 from B hood drain	M2075	1	nw-cond	DiagB3#7	LP Drain Header						____F	
TEC-ACV-30	Extr to HTR 2 from B hood drain	M2075	1	nw-cond	DiagB3#8	LP Drain Header						____F	
TEC-ACV-34	Extr to HTR 3 from B hood drain	M2075	1	nw-cond	DiagB3#9	LP Drain Header						____F	
TEC-ACV-38	Extr to HTR 3 from B hood drain	M2075	1	nw-cond	DiagB3#10	LP Drain Header						____F	
TEC-ACV-42	Extr to HTR 4 from B hood drain	M2075	1	nw-cond	DiagB3#11	LP Drain Header						____F	
TEC-ACV-46	Extr to HTR 4 from B hood drain	M2075	1	nw-cond	DiagB3#12	LP Drain Header						____F	

LOCATION: CONDENSER CONNECTIONS-NORTH MEZZANINE

			LOCATION					VALVE POSITION		CHECKOFF		Downstream	
VALVE NUMBER	DESCRIPTION	P&ID	Floor	Near	Area	Termintaion Point	CLASS	Normal	Test	Initials		Temp (F)	NOTES:
FWA-ABV-303	BFPT "A" HP Stop Vlv Drain	M2035C	2	N-cond	Diag C #6	dwncmr drns hdr						____F	
FWA-ABV-309	BFPT"A"LP stp vlv below stdr	M2035C	2	N-cond	Diag C #7	Cond-A NorthMez						____F	
FWA-ABV-305	BFPT"A" HP Stop Valve Drain	M2035C	2	N-cond	Diag C #8	Cond-A NorthMez						____F	
FWA-ABV-311	BFPT"A" First Stage Drain	M2035C	2	ne-cnd	Diag C #9	Cond-A NorthMez						____F	
TEF-BV-162	HTR 4 Vent to Condenser	M2078B	5	HTR4	Diag C #10	Cond-North Mezz						____F	
TEF-BV-163	HTR 3 Vent to Condenser	M2078B	3	HTR3	Diag C #11	Cond-North Mezz						____F	
TEF-BV-164	HTR 2 Vent to Condenser	M2078B	2	HTR2	Diag C #12	Cond-North Mezz						____F	
FWA-ABV-312	BFPT"B" First Stage Drain	M2035C	2	nw-cnd	Diag C #13	Cond-C NorthMez						____F	
FWA-ABV-306	BFPT"B" HP Stop Valve Drain	M2035C	2	N-cond	Diag C #14	Cond-C NorthMez						____F	
FWA-ABV-310	BFPT"B"LP stpvlv below st dr	M2035C	2	N-cond	Diag C #15	Cond-C NorthMez						____F	
FWA-ABV-304	BFPT"B" HP Stop Valve Drain	M2035C	2	N-cond	Diag C #16	dwncmr drns hdr						____F	

LOCATION: CONDENSER CONNECTIONS-NORTH BASEMENT (check on mezzanine level)

			LOCATION					VALVE POSITION		CHECKOFF		Downstream	
VALVE NUMBER	DESCRIPTION	P&ID	Floor	Near	Area	Termintaion Point	CLASS	Normal	Test	Initials		Temp (F)	NOTES:
TGC-ORF-11	Steam Seal Hdr Low Point Drain	M2080A	2	N-cond	A-cond	Cond-A North Basemt						____F	
FWA-ABV-307	BFPT 1A Stpvlv above seat drn	M2035C	2	N-cond	A-cond	Cond-A North Basemt						____F	
FWA-ABV-308	BFPT 1B Stpvlv above seat drn	M2035C	2	N-cond	C-cond	Cond-C North Basemt						____F	

IP7016668

LOCATION: WEST SIDE BOILER DRAINS

VALVE NUMBER	DESCRIPTION	P&ID	LOCATION Floor	Near	Area	Termintaion Point	CLASS	VALVE POSITION Normal	Test	CHECKOFF Initials		Downstream Temp (F)	NOTES:
SGF-MBV-52	Roof Inlet header drain	M2068	4	fdr dck	west boiler	W boil drn bldwn hdr						F	
SGF-MBV-50	Sec SH Platen inlet drain header	M2068	4	fdr dck	west boiler	W boil drn bldwn hdr						F	
SGF-BV-48	Economizer discharge header drn	M2068	4	fdr dck	west boiler	W boil drn bldwn hdr						F	
SGF-MBV-46	Sec SH Intermediate inlet hdr drain	M2068	4	fdr dck	west boiler	W boil drn bldwn hdr						F	
SGF-MBV-44	Sec SH Intermediate inlet hdr drain	M2068	4	fdr dck	west boiler	W boil drn bldwn hdr						F	
PSA-TRP-16	Aux stm from drum and SSH stm t	M2008	14	S-boiler	south boiler	RH outlet bldwn hdr						300 F	
SGA-TRP-02	Main stm to Aux stm hdr drain trap	M2063A	16	Wboiler	west boiler	Mn Stm drip pkt drn		TRP 2		—		~~[illegible]~~ 350	3 valves
SGF-BV-40	Reheater outlet header drain	M2068	4	fdr dck	west boiler	RH outlet hdr bldwn						F	F50
SGF-BV-38	Reheater outlet header drain	M2068	4	fdr dck	west boiler	RH outlet hdr bldwn		WR 98223				F	
SGF-MBV-36	Lower convect pass hdr drain	M2068	4	fdr dck	west boiler	W boil drn bldwn hdr						F	
SGF-BV-34	Reheater inlet header drain	M2068	4	fdr dck	west boiler	W boil drn bldwn hdr						F	
SGF-BV-31	Economizer inlet header drain	M2068	4	fdr dck	west boiler	W boil drn bldwn hdr						F	
SGA-BV-19	Drum level gage drain	M2063B	18	W-Drum	west boiler	W boil drn bldwn hdr						F	
SGA-BV-26	Drum level gage drain	M2063B	18	W-Drum	west boiler	W boil drn bldwn hdr						F	
SGF-MBV-29	Lower convect pass hdr drain	M2068	4	fdr dck	west boiler	W boil drn bldwn hdr						F	
SGF-MBV-42	Sec SH outlet header drain	M2068	4	fdr dck	west boiler	Blowdown Tank 1						F	
SGA-BV-32	Drum steam pressure gage drain	M2063B	18	W-Drum	west boiler	W boil drn bldwn hdr						F	

LOCATION: EAST SIDE BOILER DRAINS

VALVE NUMBER	DESCRIPTION	P&ID	LOCATION Floor	Near	Area	Termintaion Point	CLASS	VALVE POSITION Normal	Test	CHECKOFF Initials		Downstream Temp (F)	NOTES:
SGA-TRP-03	Drum to Aux stm drain stm trp	M2063B	18	S-boiler	east boiler	E boil drn bldwn hdr						F	
SGF-BV-54	Economizer discharge header drn	M2068	4	sub-fdr	east boiler	E boil drn bldwn hdr						F	
SGF-MBV-56	Lower convect pass hdr drain	M2068	4	sub-fdr	east boiler	E boil drn bldwn hdr						F	
SGF-MBV-58	Lower convect pass hdr drain	M2068	4	sub-fdr	east boiler	E boil drn bldwn hdr						F	
SGA-MBV-4	Drum continuous blowdown	M2068	18	E-drum	east boiler	E boil drn bldwn hdr						F	
PSA-TRP-01	Cold Reheat Aux Steam Supply	M2008	8	SE-boil	east elev	E boil drn bldwn hdr						F	

LOCATION: MAIN STEAM DRIP POCKET

VALVE NUMBER	DESCRIPTION	P&ID	LOCATION Floor	Near	Area	Termintaion Point	CLASS	VALVE POSITION Normal	Test	CHECKOFF Initials		Downstream Temp (F)	NOTES:
SGG-MBV-11	Main Steam to Blowdown Tank	M2069	2	SE-boil	NE-SV&CV	Blowdown Tank						220 F	
SGG-MBV-12	Main Steam to Blowdown Tank	M2069	2	SE-boil	NE-SV&CV	Blowdown Tank						220 F	
SGG-MBV-13	Main Steam to Blowdown Tank	M2069	2	SE-boil	NE-SV&CV	Blowdown Tank						F	
SGG-MBV-14	Main Steam to Blowdown Tank	M2069	2	SE-boil	NE-SV&CV	Blowdown Tank						F	

LOCATION: DOWNCOMER DRAINS

VALVE NUMBER	DESCRIPTION	P&ID	LOCATION Floor	Near	Area	Termintaion Point	CLASS	VALVE POSITION Normal	Test	CHECKOFF Initials		Downstream Temp (F)	NOTES:
SGF-BV-59	Drum West End Downcomer	M2068	2	S-boiler	N of Htr 2	DwncmDrnBldnHdr						F	
SGF-BV-60	Drum West End Downcomer	M2068	2	S-boiler	N of Htr 2	DwncmDrnBldnHdr						F	
SGF-BV-61	Drum West Shell Downcomer	M2068	2	S-boiler	N of Htr 2	DwncmDrnBldnHdr						F	

IP7016669

SGF-BV-62	Drum West Shell Downcomer	M2068	2	S-boiler	N of Htr 2	DwncmDrnBldnHdr						F	
SGF-MBV-66	Downcomer Drain Manifold Drain	M2068	2	S-boiler	N of Htr 2	DwncmDrnBldnHdr						F	
SGF-BV-63	Drum Center Shell Downcomer	M2068	2	S-boiler	N of Htr 2	DwncmDrnBldnHdr						F	
SGF-BV-64	Drum Center Shell Downcomer	M2068	2	S-boiler	N of Htr 2	DwncmDrnBldnHdr						F	
SGF-BV-67	Drum East Shell Downcomer	M2068	2	S-boiler	N of Htr 2	DwncmDrnBldnHdr						F	
SGF-BV-68	Drum East Shell Downcomer	M2068	2	S-boiler	N of Htr 2	DwncmDrnBldnHdr						F	
SGF-BV-69	Drum East End Downcomer	M2068	2	S-boiler	N of Htr 2	DwncmDrnBldnHdr						F	
SGF-BV-70	Drum East End Downcomer	M2068	2	S-boiler	N of Htr 2	DwncmDrnBldnHdr						F	

LOCATION: SUPERHEAT BYPASS

			LOCATION					VALVE POSITION		CHECKOFF		Downstream	
VALVE NUMBER	DESCRIPTION	P&ID	Floor	Near	Area	Termintaion Point	CLASS	Normal	Test	Initials		Temp (F)	NOTES:
SGA-TRP-1	Superheat Bypass Drain Trap	M2063A	12	NW-boil	NW corner	Partial Byp Drn Cnd						F	
SGA-ACV-137	Superheat Bypass	M2063A	2	W-Cond	NW corner	C Condenser-West						F	

LOCATION: MISCELLANEOUS VALVES

			LOCATION					VALVE POSITION		CHECKOFF		Downstream	
VALVE NUMBER	DESCRIPTION	P&ID	Floor	Near	Area	Termintaion Point	CLASS	Normal	Test	Initials		Temp (F)	NOTES:
FWA-BV-299	Bootstrap Valve	M2035A	2	SW-boil	SW Htr 2							F	
FWC-ACV-28	DEA Recirc	M2037	2	W-Cond	NW corner	C Condenser-West						F	
TEC-ACV-152	1B BFPT Extraction Drain	M2075	2	W-Cond	NW corner	Cond-Basement						190 F	

LOCATION: VACUUM PUMPS

			LOCATION					VALVE POSITION		CHECKOFF		Downstream	
VALVE NUMBER	DESCRIPTION	P&ID	Floor	Near	Area	Termintaion Point	CLASS	Normal	Test	Initials		Temp (F)	NOTES:
HRB-P-1A	1A Vacuum Pump	M2021	2	SE-Boil	East Elevtr							F	
HRB-P-1B	1B Vacuum Pump	M2021	2	SE-Boil	East Elevtr							F	
HRB-P-1C	1C Vacuum Pump	M2021	2	SE-Boil	East Elevtr							F	
HRB-P-1D	1D Vacuum Pump	M2021	2	SE-Boil	East Elevtr							F	

LOCATION:

			LOCATION					VALVE POSITION		CHECKOFF		Downstream	
VALVE NUMBER	DESCRIPTION	P&ID	Floor	Near	Area	Termintaion Point	CLASS	Normal	Test	Initials		Temp (F)	NOTES:
TGA-ABV-2	Ventilator Valve	M2079	2	CV's	E A Cond	Atm - roof vents						84 F	
FWA-PS-70	BFP 1A Inlet Strainer DP	M2035A	2	N-Cond	BFPT Exh							F	
FWA-PS-71	BFP 1B Inlet Strainer DP	M2035A	2	N-Cond	BFPT Exh							F	
SGI-ABV-21	AH Soot Blower Drain	M2070	3	NE-Boil	Stairs	Cond						F	
SGI-ABV-22	AH Soot Blower Drain	M2070	3	NW-Boil	Stairs	Cond						F	
SGI-ABV-170	Boiler Soot Blower Drain	M2070	7	W-Boil		Cond						F	
SGI-ABV-171	Boiler Soot Blower Drain	M2070	7	E-Boil		Cond						F	
SGI-ABV-172	Boiler Soot Blower Drain	M2070	11	E-Boil	Backpass	Cond						F	
SGI-ABV-173	Boiler Soot Blower Drain	M2070	11	W-Boil	Backpass	Cond						F	
SGA-MBV-173	Economizer Recirc	M2063A	10.5	W-Boil	Backpass	Economizer inlet						F	
SGA-MBV-174	Economizer Recirc	M2063A	10.5	E-Boil	Backpass	Economizer inlet						F	

IP7016670

SGG-MCV-18	Main Steam Warming Line	M2069	2	E-CV'S		Cond						F	
SGG-MBV-25	Main Steam Line Drain	M2069	2	E-CV'S		Cond						F	
SGG-MBV-26	Main Steam Line Drain	M2069	2	E-CV'S		Cond						F	
SGG-MBV-55	Main Steam to BFPT Drain	M2069	2	E-CV'S		Cond						F	
SGG-MBV-56	Main Steam to BFPT Drain	M2069	2	E-CV'S		Cond						F	
PSA-ACV-60	Drum Aux Steam Supply	M2008	17	S-Boil		Aux						F	
PSA-ACV-57	SSH Aux Steam Supply	M2008	17	W-Boil		Aux						F	

IP7016671

TURBINE CYCLE PERFORMANCE TESTING | IGS Unit # 2 | Test # ____

***** CYCLE ISOLATION CHECKOFF SHEETS ***** | Date: ____ | Time: ____ | Name: ____

VALVE CLASSIFICATION: ** CRITICAL VALVE LIST**

Class 1*- CRITICAL VALVES- valves which are required to be opened immediately due to operational upset or unit trip

Class 1- Open valves just prior to test and standby, valves need to be opened at the end of each test

Class 2- Close valves up to 2 hours prior to each test (before Class I valves), re-open valves after Class I valves

Class 3- Close valves at the beginning of the day and open at the end of the day

Class NC- Non-Critical Valves- verify normally closed valves are closed (and not leaking) and normally opened valves are open

						VALVE POSITION		CHECKOFF with Initials				Downstream	
VALVE NUMBER	DESCRIPTION	P&ID	Floor	Location	CLASS	Normal	Test	Open	Close	Open	Close	Temp (F)	NOTES:
2TED-BV-0019	HP Heater 8A Alternate Drain	M2076	1	East of condenser	1*	open	close						
2TED-BV-0020	HP Heater 8A Alternate Drain	M2076	1	East of condenser	1*	open	close						
2TED-BV-0027	HP Heater 7A Alternate Drain	M2076	1	East of condenser	1*	open	close						
2TED-BV-0028	HP Heater 7A Alternate Drain	M2076	1	East of condenser	1*	open	close						
2TED-BV-0035	HP Heater 6A Alternate Drain	M2076	1	East of condenser	1*	open	close						
2TED-BV-0036	HP Heater 6A Alternate Drain	M2076	1	East of condenser	1*	open	close						
2TED-BV-0021	HP Heater 8B Alternate Drain	M2076	1	East of condenser	1*	open	close						
2TED-BV-0022	HP Heater 8B Alternate Drain	M2076	1	East of condenser	1*	open	close						
2TED-BV-0029	HP Heater 7B Alternate Drain	M2076	1	East of condenser	1*	open	close						
2TED-BV-0030	HP Heater 7B Alternate Drain	M2076	1	East of condenser	1*	open	close						
2TED-BV-0037	HP Heater 6B Alternate Drain	M2076	1	East of condenser	1*	open	close						
2TED-BV-0038	HP Heater 6B Alternate Drain	M2076	1	East of condenser	1*	open	close						
2TEC-BV-0073	HP Htrs 8A & 8B- extr drain	M2075	1	E of Lube Oil Centrifuge	2	open	close						
2TEC-BV-0075	HP Heaters 8A and 8B Extr Drain	M2075	1	E of Lube Oil Centrifuge	2	open	close						
2TEC-BV-0079	HP Htrs 8A- extr drain	M2075	1	E of Lube Oil Centrifuge	2	open	close						
2TEC-BV-0085	HP Heater 8B Extr Drain	M2075	1	E of Lube Oil Centrifuge	2	open	close						
2TEC-BV-0065	LP Heater 4 Extr Drain	M2075	1	NW corner C Cond ceiling	1	open	close						
2SGJ-BV-0056	Cold Reheat Stm Trap- Inlet	M2071	1	204-B	1	open	close						
2SGJ-BV-0057	Cold Reheat Stm Trap- Outlet	M2071	1	204-B	1	open	close						
2TEC-BV-0027	LP Heater 2 Extr Drain	M2075	1	NW corner of cond	3	open	close						
2TEC-BV-0031	LP Heater 2 Extr Drain	M2075	1	bottom row	3	open	close						
2TEC-BV-0035	LP Heater 3 Extr Drain	M2075	1	"	3	open	close						
2TEC-BV-0039	LP Heater 3 Extr Drain	M2075	1	"	3	open	close						
2TEC-BV-0043	LP Heater 4 Extr Drain	M2075	1	"	3	open	close						
2TEC-BV-0047	LP Heater 4 Extr Drain	M2075	1	"	3	open	close						
2TEC-BV-0003	LP Heater 2 Extr Drain	M2075	1	NE corner of cond	3	open	close						
2TEC-BV-0007	LP Heater 2 Extr Drain	M2075	1	"	3	open	close						
2TEC-BV-0011	LP Heater 3 Extr Drain	M2075	1	"	3	open	close						
2TEC-BV-0015	LP Heater 3 Extr Drain	M2075	1	"	3	open	close						
2TEC-BV-0019	LP Heater 4 Extr Drain	M2075	1	"	3	open	close						
2TEC-BV-0023	LP Heater 4 Extr Drain	M2075	1	"	3	open	close						
2TEC-BV-0051	LP Heater 2 Extr Drain	M2075	1	NW corner of cond	3	open	close						
2TEC-BV-0055	LP Heater 2 Extr Drain	M2075	1	top row	3	open	close						
2TEC-BV-0059	LP Heater 3 Extr Drain	M2075	1	"	3	open	close						
2TEC-BV-0063	LP Heater 3 Extr Drain	M2075	1	"	3	open	close						
2TEC-BV-0067	LP Heater 4 Extr Drain	M2075	1	"	3	open	close						
2TEC-BV-0071	LP Heater 4 Extr Drain	M2075	1	"	3	open	close						

IP7016672

TURBINE CYCLE PERFORMANCE TESTING | IGS Unit # 2 | Test # _____

***** CYCLE ISOLATION CHECKOFF SHEETS ***** | Date: _____ | Time: _____ | Name: _____

VALVE CLASSIFICATION: ** CRITICAL VALVE LIST**

Class 1*- CRITICAL VALVES- valves which are required to be opened immediately due to operational upset or unit trip

Class 1- Open valves just prior to test and standby, valves need to be opened at the end of each test

Class 2- Close valves up to 2 hours prior to each test (before Class I valves), re-open valves after Class I valves

Class 3- Close valves at the beginning of the day and open at the end of the day

Class NC- Non-Critical Valves- verify normally closed valves are closed (and not leaking) and normally opened valves are open

						VALVE POSITION		CHECKOFF with Initials				Downstream	
VALVE NUMBER	DESCRIPTION	P&ID	Floor	Location	CLASS	Normal	Test	Open	Close	Open	Close	Temp (F)	NOTES:
2HRA-BV-0019	Condensate Normal Drawoff	M2020	1	SW corner of condenser	1	open	close						
2HRA-BV-0020	Condensate Normal Drawoff	M2020	1	SW corner of condenser	1	open	close						
2TEE-BV-0015	Flash Tank Altrn Drain to Cndr	M2077	1	southwest of condenser	1*	open	close						
2TEE-BV-0022	Flash Tank Altrn Drain to Cndr	M2077	1	southwest of condenser	1*	open	close						
2TEE-BV-0011	LP Htr 3 Altr HLvl Drain	M2077	1	west of condenser	1*	open	close						
2TEE-BV-0019	LP Htr 3 Altr HLvl Drain	M2077	1	west of condenser	1*	open	close						
2TEE-BV-0013	LP Htr 2 Altr HLvl Drain	M2077	1	west of condenser	1*	open	close						
2TEE-BV-0021	LP Htr 2 Altr HLvl Drain	M2077	1	west of condenser	1*	open	close						
2PSA-BV-0082	Aux Stm Trap 5	M2008	1		2								
2FWD-BV-0121	Makeup to Regen Pumps	M2038B	1	Cond Polisher Regen Pumps	3								
2FWD-BV-0125	Makeup to Regen Pumps	M2038B	1	Cond Polisher Regen Pumps	3								
2TEE-BV-0009	LP Htr 4 Altr HLvl Drain	M2077	2	west of condenser	1*								
2TEE-BV-0017	LP Htr 4 Altr HLvl Drain	M2077	2	west of condenser	1*								
2FWC-BV-0026	Deaerator Recirc to Cond	M2037	2	west of condenser	1								
2FWC-BV-0027	Deaerator Recirc to Cond	M2037	2	west of condenser	1								
2FWC-MBV-0090	Deaerator Recirc to Cond	M2037	2	west of condenser	1								
2HRA-BV-0030	Condensate Normal Makeup	M2020	2	southwest of condenser	1								
2HRA-BV-0031	Condensate Normal Makeup	M2020	2	southwest of condenser	1								
2HRA-BV-0032	Condensate Normal Makeup	M2020	2	southwest of condenser	1								
2TGC-BV-0010	Main Stm Supply to Turb Seals	M2080A	2	west of M Stm Header	1*								
2FWA-BV-0388	HP Stop Valve 1B1 stem leakoff	M2035C	2	NW of Condenser	1								
2FWA-BV-0390	HP Stop Valve 1B1 seat drain	M2035C	2	NW of Condenser	1								
2FWA-BV-0391	HP Stop Valve 1A1 seat drain	M2035C	2	N of Condenser	1								
2SGJ-BV-0090	Cond to CRH Desuperhtr 2	M2071	2		1								
2HRB-BV-0109	Separator 1D Makeup Flow	M2021	2	Cond Vacuum Pump D	2								
2HRB-BV-0110	Separator 1C Makeup Flow	M2021	2	Cond Vacuum Pump C	2								
2HRB-BV-0111	Separator 1B Makeup Flow	M2021	2	Cond Vacuum Pump B	2								
2HRB-BV-0112	Separator 1A Makeup Flow	M2021	2	Cond Vacuum Pump A	2								
2TGC-BV-0058	Auxiliary Steam to Cold Reheat	M2080A	2	top of valve deck	1								
2SGG-BV-0058	Mn Stm Warming Line	M2069	2	NE of MCC 2A03	3								
2SGG-MBV-0009	Main Steam to BFPT 1A	M2069	3	NE of BFPT 1A	1								
2SGG-MBV-0010	Main Steam to BFPT 1B	M2069	3	SW of BFPT 1B	1								

IP7016673

2TGA-BV-0005	Exhaust Hood Spray Supply	M2079	3	by feedwater heater	1								
2TEF-BV-0163	LP Htr 3 Cont Vent to Cond	M2078B	3	LP Htr 3	2								
2TEF-BV-0077	HP Htr 6A Cont Vent to DA	M2078A	3	HP Htr 6A	2								
2TEF-BV-0080	HP Htr 6B Cont Vent to DA	M2078A	3	HP Htr 6B	2								

IP70166674

*** CYCLE ISOLATION CHECKOFF SHEETS ***

Date: Time: Name:

VALVE CLASSIFICATION: ** CRITICAL VALVE LIST**

Class 1*- CRITICAL VALVES- valves which are required to be opened immediately due to operational upset or unit trip

Class 1- Open valves just prior to test and standby, valves need to be opened at the end of each test

Class 2- Close valves up to 2 hours prior to each test (before Class I valves), re-open valves after Class I valves

Class 3- Close valves at the beginning of the day and open at the end of the day

Class NC- Non-Critical Valves- verify normally closed valves are closed (and not leaking) and normally opened valves are open

						VALVE POSITION		CHECKOFF with Initials				Downstream	
VALVE NUMBER	DESCRIPTION	P&ID	Floor	Location	CLASS	Normal	Test	Open	Close	Open	Close	Temp (F)	NOTES:
2SGF-BV-0065	Downcomer Drain Blowdown Manifol	M2068	2	S side of boiler									
2TEF-BV-0076	HP Htr 7A Cont Vent to DA	M2078A	5	HP Htr 7A	2								
2TEF-BV-0079	HP Htr 7B Cont Vent to DA	M2078A	5	HP Htr 7B	2								
2TEF-BV-0162	LP Htr 4 Cont Vent to Cond	M2078B	5	LP Htr 4	2								
2TEF-BV-0075	HP Htr 8A Cont Vent to DA	M2078A	6	HP Htr 8A	2								
2TEF-BV-0078	HP Htr 8B Cont Vent to DA	M2078A	6	HP Htr 8B	2								
2PSA-MBV-0017	Cold Reheat Supply to Aux Stm	M2008	9	behind east elevator	2								
2PSA-BV-0012	Cold Reheat Supply to Aux Stm	M2008	9	behind east elevator	2								
2PSA-BV-0014	Cold Reheat Supply to Aux Stm	M2008	9	behind east elevator	2								
2SGF-BV-0055	Lwr Conveyor Pass Header	M2068	10	east	3								
2SGF-BV-0057	Lwr Conveyor Pass Header	M2068	10	east	3								
2SGF-BV-0035	Lwr Conveyor Pass Header	M2068	10	west	3								
2SGF-BV-0028	Lwr Conveyor Pass Header	M2068	10	west	3								
2FWA-BV-0037	BFP 1A Recirc	M2035A	13	east	1*								
2FWA-BV-0038	BFP 1B Recirc	M2035A	13		1*								
2TEF-BV-0003	DA cont vents to atmos	M2078A	14	top of DA	2								
2TEF-BV-0007	DA cont vents to atmos	M2078A	14	top of DA	2								
2TEF-BV-00011	DA cont vents to atmos	M2078A	14	top of DA	2								
2SGF-BV-0041	Sec SH Outlet Header	M2068	15	west	3								
2SGF-BV-0043	Sec SH Intermed Header	M2068	15	west	3								
2SGF-BV-0045	Sec SH Intermed Header	M2068	15	west	3								
2SGF-BV-0049	Sec SH Platen Inlet Header	M2068	15	west	3								
2SGF-BV-0051	Roof Inlet Header	M2068	15	west	3								
2PSA-BV-0021	Aux Pegging Stm to Deaerator	M2008	15	N of east elevator	1*								
2PSA-BV-0022	Aux Pegging Stm to Deaerator	M2008	15	N of east elevator	1*								
2PSA-BV-0058	SSH to Aux Stm	M2008	17	west side	2								
2SGA-BV-0010	MStm Supply to Aux Stm Header	M2063A	17	west side	2								
2SGA-BV-0195	Steam Trap 2	M2063A			2								
2SGA-BV-0199	Steam Trap 3	M2063B	18										
2SGA-BV-0003	Cont Blowdown	M2063B	18	E end of the drum	2								
2SGA-MBV-0004	Cont Blowdown	M2063B	18	E end of the drum	2								
2SGA-MBV-0002	Stm Supply to Aux Stm	M2063B	18	S end of the drum	2								

IP7016675

2SGA-BV-0001	Stm Supply to Aux Stm	M2063B	18	S end of the drum	2								

IP7016676

TURBINE CYCLE PERFORMANCE TESTING | IGS Unit # 2 | Test # _____

***** CYCLE ISOLATION CHECKOFF SHEETS ***** | Date: _____ | Time: _____ | Name: _____

VALVE CLASSIFICATION: ** CRITICAL VALVE LIST**

Class 1*- CRITICAL VALVES- valves which are required to be opened immediately due to operational upset or unit trip

Class 1- Open valves just prior to test and standby, valves need to be opened at the end of each test

Class 2- Close valves up to 2 hours prior to each test (before Class I valves), re-open valves after Class I valves

Class 3- Close valves at the beginning of the day and open at the end of the day

Class NC- Non-Critical Valves- verify normally closed valves are closed (and not leaking) and normally opened valves are open

						VALVE POSITION		CHECKOFF with Initials				Downstream	
VALVE NUMBER	DESCRIPTION	P&ID	Floor	Location	CLASS	Normal	Test	Open	Close	Open	Close	Temp (F)	NOTES:
2SAC-BV-0017	Sample 1 Makeup to Cond	M2054A	1	Water Lab	2								
2SAC-BV-0030	Sample 1 Makeup to Cond	M2054A	1	Water Lab	2								
2SAC-BV-0019	Sample 3 Demin 1A Outlet	M2054A	1	Water Lab	2								
2SAC-BV-0032	Sample 3 Demin 1A Outlet	M2054A	1	Water Lab	2								
2SAC-BV-0020	Sample 4 Demin 1B Outlet	M2054A	1	Water Lab	2								
2SAC-BV-0033	Sample 4 Demin 1B Outlet	M2054A	1	Water Lab	2								
2SAC-BV-0021	Sample 5 Demin 1C Outlet	M2054A	1	Water Lab	2								
2SAC-BV-0034	Sample 5 Demin 1C Outlet	M2054A	1	Water Lab	2								
2SAC-BV-0022	Sample 6 Demin 1D Outlet	M2054A	1	Water Lab	2								
2SAC-BV-0035	Sample 6 Demin 1D Outlet	M2054A	1	Water Lab	2								
2SAC-BV-0023	Sample 7 Cond Polisher Outlet	M2054A	1	Water Lab	2								
2SAC-BV-0036	Sample 7 Cond Polisher Outlet	M2054A	1	Water Lab	2								
2SAC-BV-0001	Smpl 8 Cond after Gland Cond	M2054A	1	Water Lab	2								
2SAC-BV-0002	Sample 9 DA Inlet	M2054A	1	Water Lab	2								
2SAC-BV-0024	Sample 9 DA Inlet	M2054A	1	Water Lab	2								
2SAC-BV-0037	Sample 9 DA Inlet	M2054A	1	Water Lab	2								
2SAC-BV-0026	Sample 11 Econ Inlet	M2054A	1	Water Lab	2								
2SAC-BV-0039	Sample 11 Econ Inlet	M2054A	1	Water Lab	2								
2SAC-BV-0003	Sample 13 Satuated Steam	M2054A	1	Water Lab	2								
2SAC-BV-0004	Sample 14 Main Steam	M2054A	1	Water Lab	2								
2SAC-BV-0028	Sample 14 Main Steam	M2054A	1	Water Lab	2								
2SAC-BV-0041	Sample 14 Main Steam	M2054A	1	Water Lab	2								

IP7016677

TURBINE CYCLE PERFORMANCE TESTING | IGS Unit # 2 | Test # _____

***** CYCLE ISOLATION CHECKOFF SHEETS ***** | Date: _____ | Time: _____ | Name: _____

VALVE CLASSIFICATION:

Class I*- CRITICAL VALVES- valves which are required to be opened immediately due to operational upset or unit trip

Class I- Open valves just prior to test and standby, valves need to be opened at the end of each test

Class II- Close valves up to 2 hours prior to each test (before Class I valves), re-open valves after Class I valves

Class III- Close valves at the beginning of the day and open at the end of the day

Class IV- Non-Critical Valves- verify normally closed valves are closed (and not leaking) and normally opened valves are open

LOCATION: CONDENSER CONNECTIONS- EAST BASEMENT

			LOCATION					VALVE POSITION		CHECKOFF		Downstream	
VALVE NUMBER	DESCRIPTION	P&ID	Floor	Near	Area	Termintaion Point	CLASS	Normal	Test	Initials		Temp (F)	NOTES:
TGC-BV-65	Drain from TDV to Htr	M2080A	2	ss-plat	Diag A #1	Cond TB end bsmt						____F	
TGC-BV-67	Drain from TDV to Htr	M2080A	2	ss-plat	Diag A #1	Cond TB end bsmt						____F	
FWA-MBV-189	Wrmup Drain from FW to Htr 6	M2035A			Diag A #2	Cond TB end bsmt						____F	
TGC-MBV-31	RHT bowl drain to cond	M2080B	1	s-ehc	Diag A #3	Cond TB end bsmt						____F	
TGC-MBV-37	Control Valve drain to cond.	M2080B	2	convlvs	Diag A #4	Cond TB end bsmt						____F	
TGC-MBV-39	Control Valve drain to cond.	M2080B	2	convlvs	Diag A #5	Cond TB end bsmt						____F	
TGC-MBV-40	Control Valve drain to cond.	M2080B	2	convlvs	Diag A #6	Cond TB end bsmt						____F	
TGC-MBV-33	Stop Valve drain to cond	M2080B	2	stpvlvs	Diag A #7	Cond TB end bsmt						____F	
TGC-MBV-34	Stop Valve drain to cond	M2080B	2	stpvlvs	Diag A #8	Cond TB end bsmt						____F	
TGC-MBV-36	Stop Valve drain to cond	M2080B	2	stpvlvs	Diag A #9	Cond TB end bsmt						____F	
TGC-MBV-35	Stop Valve drain to cond	M2080B	2	stpvlvs	Diag A #10	Cond TB end bsmt						____F	
TGC-MBV-32	RHT bowl drain to cond	M2080B	1	s-ehc	Diag A #11	Cond TB end bsmt						____F	
SGJ-MBV-18	CRH low point drains	M2071	1	s-ehc	Diag A #12	Cond TB end bsmt						____F	
SGJ-MBV-14	HRH low point drains	M2071	1	s-ehc	Diag A #13	Cond TB end bsmt						____F	
SGJ-MBV-16	HRH low point drains	M2071	1	s-ehc	Diag A #13	Cond TB end bsmt						____F	
SGG-MBV-25	MS Byp to cond low pt drain	M2069	2	ne-cond	Diag A #14	Cond TB end bsmt						____F	
TGC-MBV-38	Control Valve drain to cond	M2080B	2	convlvs	Diag A #15	Cond TB end bsmt						____F	
TGC-MBV-49	MS lead drain to cond	M2080	1	sw-ehc	Diag A #16	Cond TB end bsmt						____F	
TGC-ACV-4	TDV to cond	M2080A	2.5	stmslplt	Diag A #17	Cond TB end bsmt						____F	
TGA-ABV-20	Equalizer valve	M2079	2		Diag A #18	Cond TB end bsmt						____F	
TED-ACV-11	Htr 6A hi level dump	M2076	1	e-cond	Diag A #20	Cond TB end bsmt						____F	
TED-ACV-12	Htr 6B hi level dump	M2076	1	e-cond	Diag A #21	Cond TB end bsmt						____F	
TED-ACV-3	Htr 8A hi level dump	M2076	1	e-cond	Diag A #22	Cond TB end bsmt						____F	
TED-ACV-4	Htr 8B hi level dump	M2076	1	e-cond	Diag A#24	Cond TB end bsmt						____F	
TED-ACV-8	Htr 7B hi level dump	M2076	1	e-cond	Diag A#25	Cond TB end bsmt						____F	
TGC-ORF-8	SSH low point drain	M2080A	1		Diag A#26	Cond TB end bsmt						____F	
TED-ACV-7	Htr 7A hi level dump	M2076	1	e-cond	Diag A#27	Cond TB end bsmt						____F	
TEC-ACV-146	Drn frm LPextr stm to BFPT A	M2075	1	e-cond	Diag A#28	Cond TB end bsmt						____F	

LOCATION: HP DRAIN HEADER

			LOCATION					VALVE POSITION		CHECKOFF		Downstream	
VALVE NUMBER	DESCRIPTION	P&ID	Floor	Near	Area	Termintaion Point	CLASS	Normal	Test	Initials		Temp (F)	NOTES:
SGI-MBV-178	Air heater sootblowers drain	M2070	1	E-EHC	DiagB1#1	HP Drain Header						____F	
SGI-MBV-35	Boiler sootblowers drain	M2070	1	E-EHC	DiagB1#2	HP Drain Header						____F	
TEC-ACV-14	4th stg extr (drain) to HTR 8A & 8	M2075	1	E-EHC	DiagB1#3	HP Drain Header						____F	

IP7016678

TEC-ACV-80	4th stg extr (drain) to HTR 8A	M2075	1	E-EHC	DiagB1#4	HP Drain Header						F	
TEC-ACV-140	14th stg extr (drain) to BFPT 1B	M2075	1	E-EHC	DiagB1#5	HP Drain Header						F	
TEC-ACV-128	14th stg extr (drain) to DA	M2075	1	E-EHC	DiagB1#6	HP Drain Header						F	
TEC-ACV-116	14th stg extr (drain) to DA	M2075	1	E-EHC	DiagB1#7	HP Drain Header						F	
TEC-ACV-86	4th stg extr (drain) to HTR 8B	M2075	1	E-EHC	DiagB1#8	HP Drain Header						F	
TEC-ACV-92	11th stg extr (drain) to HTR 6A&B	M2075	1	E-EHC	DiagB1#9	HP Drain Header						F	
TEC-ACV-98	11th stg extr (drain) to HTR 6A	M2075	1	E-EHC	DiagB1#10	HP Drain Header						F	
TEC-ACV-101	11th stg extr (drain) to HTR 6B	M2075	1	E-EHC	DiagB1#11	HP Drain Header						F	
TEC-ACV-134	14th stg extr (drain) to BFPT 1A	M2075	1	E-EHC	DiagB1#12	HP Drain Header						F	
TEC-ACV-122	14th stg extr (drain) to BFPT 1A&	M2075	1	E-EHC	DiagB1#13	HP Drain Header						F	
TEC-ACV-110	14th stg extr (drain) to DA	M2075	1	E-EHC	DiagB1#14	HP Drain Header						F	
PSA-ORF-1	Aux Stm Hdr orificed drain line	M2008	1	S-EHC	DiagB1#15	HP Drain Header						F	
LOCATION: LP DRAIN HEADER													
					LOCATION			VALVE POSITION		CHECKOFF		Downstream	
VALVE NUMBER	DESCRIPTION	P&ID	Floor	Near	Area	Termintaion Point	CLASS	Normal	Test	Initials		Temp (F)	NOTES:
TEC-ACV-2	HTR 2 extr from A hood (drain)	M2075	1	ne-cond	DiagB2#1	LP Drain Header						F	
TEC-ACV-6	HTR 2 extr from A hood (drain)	M2075	1	ne-cond	DiagB2#2	LP Drain Header						F	
TEC-ACV-10	HTR 3 extr from A hood (drain)	M2075	1	ne-cond	DiagB2#3	LP Drain Header						F	
TEC-ACV-14	HTR 3 extr from A hood (drain)	M2075	1	ne-cond	DiagB2#4	LP Drain Header						F	
TEC-ACV-18	HTR 4 extr from A hood (drain)	M2075	1	ne-cond	DiagB2#5	LP Drain Header						F	
TEC-ACV-22	HTR 4 extr from A hood (drain)	M2075	1	ne-cond	DiagB2#6	LP Drain Header						F	
TEC-ACV-50	Extr to HTR 2 from C hood drain	M2075	1	nw-cond	DiagB3#1	LP Drain Header						F	

IP70166 79

TEC-ACV-54	Extr to HTR 2 from C hood drain	M2075	1	nw-cond	DiagB3#2	LP Drain Header						F	
TEC-ACV-58	Extr to HTR3 from C hood drain	M2075	1	nw-cond	DiagB3#3	LP Drain Header						F	
TEC-ACV-62	Extr to HTR3 from C hood drain	M2075	1	nw-cond	DiagB3#4	LP Drain Header						F	
TEC-ACV-66	Extr to HTR 4 from C hood drain	M2075	1	nw-cond	DiagB3#5	LP Drain Header						F	
TEC-ACV-70	Extr to HTR 4 from C hood drain	M2075	1	nw-cond	DiagB3#6	LP Drain Header						F	
TEC-ACV-26	Extr to HTR 2 from B hood drain	M2075	1	nw-cond	DiagB3#7	LP Drain Header						F	
TEC-ACV-30	Extr to HTR 2 from B hood drain	M2075	1	nw-cond	DiagB3#8	LP Drain Header						F	
TEC-ACV-34	Extr to HTR 3 from B hood drain	M2075	1	nw-cond	DiagB3#9	LP Drain Header						F	
TEC-ACV-38	Extr to HTR 3 from B hood drain	M2075	1	nw-cond	DiagB3#10	LP Drain Header						F	
TEC-ACV-42	Extr to HTR 4 from B hood drain	M2075	1	nw-cond	DiagB3#11	LP Drain Header						F	
TEC-ACV-46	Extr to HTR 4 from B hood drain	M2075	1	nw-cond	DiagB3#12	LP Drain Header						F	

LOCATION: CONDENSER CONNECTIONS-NORTH MEZZANINE

			LOCATION					VALVE POSITION		CHECKOFF		Downstream	
VALVE NUMBER	DESCRIPTION	P&ID	Floor	Near	Area	Termintaion Point	CLASS	Normal	Test	Initials		Temp (F)	NOTES:
FWA-ABV-303	BFPT "A" HP Stop Vlv Drain	M2035C	2	N-cond	Diag C #6	dwncmr drns hdr						F	
FWA-ABV-309	BFPT"A"LP stp vlv below stdr	M2035C	2	N-cond	Diag C #7	Cond-A NorthMez						F	
FWA-ABV-305	BFPT"A" HP Stop Valve Drain	M2035C	2	N-cond	Diag C #8	Cond-A NorthMez						F	
FWA-ABV-311	BFPT"A" First Stage Drain	M2035C	2	ne-cnd	Diag C #9	Cond-A NorthMez						F	
TEF-BV-162	HTR 4 Vent to Condenser	M2078B	5	HTR4	Diag C #10	Cond-North Mezz						F	
TEF-BV-163	HTR 3 Vent to Condenser	M2078B	3	HTR3	Diag C #11	Cond-North Mezz						F	
TEF-BV-164	HTR 2 Vent to Condenser	M2078B	2	HTR2	Diag C #12	Cond-North Mezz						F	
FWA-ABV-312	BFPT"B" First Stage Drain	M2035C	2	nw-cnd	Diag C #13	Cond-C NorthMez						F	
FWA-ABV-306	BFPT"B" HP Stop Valve Drain	M2035C	2	N-cond	Diag C #14	Cond-C NorthMez						F	
FWA-ABV-310	BFPT"B"LP stpvlv below st dr	M2035C	2	N-cond	Diag C #15	Cond-C NorthMez						F	
FWA-ABV-304	BFPT"B" HP Stop Valve Drain	M2035C	2	N-cond	Diag C #16	dwncmr drns hdr						F	

LOCATION: CONDENSER CONNECTIONS-NORTH BASEMENT (check on mezzanine level)

			LOCATION					VALVE POSITION		CHECKOFF		Downstream	
VALVE NUMBER	DESCRIPTION	P&ID	Floor	Near	Area	Termintaion Point	CLASS	Normal	Test	Initials		Temp (F)	NOTES:
TGC-ORF-11	Steam Seal Hdr Low Point Drain	M2080A	2	N-cond	A-cond	Cond-A North Basemt						F	
FWA-ABV-307	BFPT 1A Stpvlv above seat drn	M2035C	2	N-cond	A-cond	Cond-A North Basemt						F	
FWA-ABV-308	BFPT 1B Stpvlv above seat drn	M2035C	2	N-cond	C-cond	Cond-C North Basemt						F	

IP7016680

LOCATION: WEST SIDE BOILER DRAINS

VALVE NUMBER	DESCRIPTION	P&ID	LOCATION Floor	Near	Area	Termintaion Point	CLASS	VALVE POSITION Normal	Test	CHECKOFF Initials		Downstream Temp (F)	NOTES:
SGF-MBV-52	Roof Inlet header drain	M2068	4	fdr dck	west boiler	W boil drn bldwn hdr						F	
SGF-MBV-50	Sec SH Platen inlet drain header	M2068	4	fdr dck	west boiler	W boil drn bldwn hdr						F	
SGF-BV-48	Economizer discharge header drn	M2068	4	fdr dck	west boiler	W boil drn bldwn hdr						F	
SGF-MBV-46	Sec SH Intermediate inlet hdr drain	M2068	4	fdr dck	west boiler	W boil drn bldwn hdr						F	
SGF-MBV-44	Sec SH Intermediate inlet hdr drain	M2068	4	fdr dck	west boiler	W boil drn bldwn hdr						F	
PSA-TRP-16	Aux stm from drum and SSH stm t	M2008	14	S-boiler	south boiler	RH outlet bldwn hdr						F	
SGA-TRP-02	Main stm to Aux stm hdr drain trap	M2063A	16	Wboiler	west boiler	Mn Stm drip pkt drn						F	
SGF-BV-40	Reheater outlet header drain	M2068	4	fdr dck	west boiler	RH outlet hdr bldwn						F	
SGF-BV-38	Reheater outlet header drain	M2068	4	fdr dck	west boiler	RH outlet hdr bldwn						F	
SGF-MBV-36	Lower convect pass hdr drain	M2068	4	fdr dck	west boiler	W boil drn bldwn hdr						F	
SGF-BV-34	Reheater inlet header drain	M2068	4	fdr dck	west boiler	W boil drn bldwn hdr						F	
SGF-BV-31	Economizer inlet header drain	M2068	4	fdr dck	west boiler	W boil drn bldwn hdr						F	
SGA-BV-19	Drum level gage drain	M2063B	18	W-Drum	west boiler	W boil drn bldwn hdr						F	
SGA-BV-26	Drum level gage drain	M2063B	18	W-Drum	west boiler	W boil drn bldwn hdr						F	
SGF-MBV-29	Lower convect pass hdr drain	M2068	4	fdr dck	west boiler	W boil drn bldwn hdr						F	
SGF-MBV-42	Sec SH outlet header drain	M2068	4	fdr dck	west boiler	Blowdown Tank 1						F	
SGA-BV-32	Drum steam pressure gage drain	M2063B	18	W-Drum	west boiler	W boil drn bldwn hdr						F	

LOCATION: EAST SIDE BOILER DRAINS

VALVE NUMBER	DESCRIPTION	P&ID	LOCATION Floor	Near	Area	Termintaion Point	CLASS	VALVE POSITION Normal	Test	CHECKOFF Initials		Downstream Temp (F)	NOTES:
SGA-TRP-03	Drum to Aux stm drain stm trp	M2063B	18	S-boiler	east boiler	E boil drn bldwn hdr						F	
SGF-BV-54	Economizer discharge header drn	M2068	4	sub-fdr	east boiler	E boil drn bldwn hdr						F	
SGF-MBV-56	Lower convect pass hdr drain	M2068	4	sub-fdr	east boiler	E boil drn bldwn hdr						F	
SGF-MBV-58	Lower convect pass hdr drain	M2068	4	sub-fdr	east boiler	E boil drn bldwn hdr						F	
SGA-MBV-4	Drum continuous blowdown	M2068	18	E-drum	east boiler	E boil drn bldwn hdr						F	
PSA-TRP-01	Cold Reheat Aux Steam Supply	M2008	8	SE-boil	east elev	E boil drn bldwn hdr						F	

LOCATION: MAIN STEAM DRIP POCKET

VALVE NUMBER	DESCRIPTION	P&ID	LOCATION Floor	Near	Area	Termintaion Point	CLASS	VALVE POSITION Normal	Test	CHECKOFF Initials		Downstream Temp (F)	NOTES:
SGG-MBV-11	Main Steam to Blowdown Tank	M2069	2	SE-boil	NE-SV&CV	Blowdown Tank						F	
SGG-MBV-12	Main Steam to Blowdown Tank	M2069	2	SE-boil	NE-SV&CV	Blowdown Tank						F	
SGG-MBV-13	Main Steam to Blowdown Tank	M2069	2	SE-boil	NE-SV&CV	Blowdown Tank						F	
SGG-MBV-14	Main Steam to Blowdown Tank	M2069	2	SE-boil	NE-SV&CV	Blowdown Tank						F	

LOCATION: DOWNCOMER DRAINS

VALVE NUMBER	DESCRIPTION	P&ID	LOCATION Floor	Near	Area	Termintaion Point	CLASS	VALVE POSITION Normal	Test	CHECKOFF Initials		Downstream Temp (F)	NOTES:
SGF-BV-59	Drum West End Downcomer	M2068	2	S-boiler	N of Htr 2	DwncmDrnBldnHdr						F	
SGF-BV-60	Drum West End Downcomer	M2068	2	S-boiler	N of Htr 2	DwncmDrnBldnHdr						F	
SGF-BV-61	Drum West Shell Downcomer	M2068	2	S-boiler	N of Htr 2	DwncmDrnBldnHdr						F	

IP7016681

SGF-BV-62	Drum West Shell Downcomer	M2068	2	S-boiler	N of Htr 2	DwncmDrnBldnHdr						F	
SGF-MBV-66	Downcomer Drain Manifold Drain	M2068	2	S-boiler	N of Htr 2	DwncmDrnBldnHdr						F	
SGF-BV-63	Drum Center Shell Downcomer	M2068	2	S-boiler	N of Htr 2	DwncmDrnBldnHdr						F	
SGF-BV-64	Drum Center Shell Downcomer	M2068	2	S-boiler	N of Htr 2	DwncmDrnBldnHdr						F	
SGF-BV-67	Drum East Shell Downcomer	M2068	2	S-boiler	N of Htr 2	DwncmDrnBldnHdr						F	
SGF-BV-68	Drum East Shell Downcomer	M2068	2	S-boiler	N of Htr 2	DwncmDrnBldnHdr						F	
SGF-BV-69	Drum East End Downcomer	M2068	2	S-boiler	N of Htr 2	DwncmDrnBldnHdr						F	
SGF-BV-70	Drum East End Downcomer	M2068	2	S-boiler	N of Htr 2	DwncmDrnBldnHdr						F	

LOCATION: SUPERHEAT BYPASS

			LOCATION					VALVE POSITION		CHECKOFF		Downstream	
VALVE NUMBER	DESCRIPTION	P&ID	Floor	Near	Area	Termintaion Point	CLASS	Normal	Test	Initials		Temp (F)	NOTES:
SGA-TRP-1	Superheat Bypass Drain Trap	M2063A	12	NW-boil	NW corner	Partial Byp Drn Cnd						F	
SGA-ACV-137	Superheat Bypass	M2063A	2	W-Cond	NW corner	C Condenser-West						F	

LOCATION: MISCELLANEOUS VALVES

			LOCATION					VALVE POSITION		CHECKOFF		Downstream	
VALVE NUMBER	DESCRIPTION	P&ID	Floor	Near	Area	Termintaion Point	CLASS	Normal	Test	Initials		Temp (F)	NOTES:
FWA-BV-299	Bootstrap Valve	M2035A	2	SW-boil	SW Htr 2							F	
FWC-ACV-28	DEA Recirc	M2037	2	W-Cond	NW corner	C Condenser-West						F	
TEC-ACV-152	1B BFPT Extraction Drain	M2075	2	W-Cond	NW corner	Cond-Basement						F	

LOCATION: VACUUM PUMPS

			LOCATION					VALVE POSITION		CHECKOFF		Downstream	
VALVE NUMBER	DESCRIPTION	P&ID	Floor	Near	Area	Termintaion Point	CLASS	Normal	Test	Initials		Temp (F)	NOTES:
HRB-P-1A	1A Vacuum Pump	M2021	2	SE-Boil	East Elevtr							F	
HRB-P-1B	1B Vacuum Pump	M2021	2	SE-Boil	East Elevtr							F	
HRB-P-1C	1C Vacuum Pump	M2021	2	SE-Boil	East Elevtr							F	
HRB-P-1D	1D Vacuum Pump	M2021	2	SE-Boil	East Elevtr							F	

LOCATION:

			LOCATION					VALVE POSITION		CHECKOFF		Downstream	
VALVE NUMBER	DESCRIPTION	P&ID	Floor	Near	Area	Termintaion Point	CLASS	Normal	Test	Initials		Temp (F)	NOTES:
TGA-ABV-2	Ventilator Valve	M2079	2	CV's	E A Cond	Atm - roof vents						F	
FWA-PS-70	BFP 1A Inlet Strainer DP	M2035A	2	N-Cond	BFPT Exh							F	
FWA-PS-71	BFP 1B Inlet Strainer DP	M2035A	2	N-Cond	BFPT Exh							F	
SGI-ABV-21	AH Soot Blower Drain	M2070	3	NE-Boil	Stairs	Cond						F	
SGI-ABV-22	AH Soot Blower Drain	M2070	3	NW-Boil	Stairs	Cond						F	
SGI-ABV-170	Boiler Soot Blower Drain	M2070	7	W-Boil		Cond						F	
SGI-ABV-171	Boiler Soot Blower Drain	M2070	7	E-Boil		Cond						F	
SGI-ABV-172	Boiler Soot Blower Drain	M2070	11	E-Boil	Backpass	Cond						F	
SGI-ABV-173	Boiler Soot Blower Drain	M2070	11	W-Boil	Backpass	Cond						F	
SGA-MBV-173	Economizer Recirc	M2063A	10.5	W-Boil	Backpass	Economizer inlet						F	
SGA-MBV-174	Economizer Recirc	M2063A	10.5	E-Boil	Backpass	Economizer inlet						F	

IP70166682

SGG-MCV-18	Main Steam Warming Line	M2069	2	E-CV'S		Cond						F	
SGG-MBV-25	Main Steam Line Drain	M2069	2	E-CV'S		Cond						F	
SGG-MBV-26	Main Steam Line Drain	M2069	2	E-CV'S		Cond						F	
SGG-MBV-55	Main Steam to BFPT Drain	M2069	2	E-CV'S		Cond						F	
SGG-MBV-56	Main Steam to BFPT Drain	M2069	2	E-CV'S		Cond						F	
PSA-ACV-60	Drum Aux Steam Supply	M2008	17	S-Boil		Aux						F	
PSA-ACV-57	SSH Aux Steam Supply	M2008	17	W-Boil		Aux						F	

IP7016683

Day 3 - Test 5 T/2350

IP7016684

TGABI - 6 Oil Smoke

TURBINE CYCLE PERFORMANCE TESTING	IGS Unit # 2	Test # 7B
*** CYCLE ISOLATION CHECKOFF SHEETS ***	Date: 4/11/02	Time: Name: Spence

VALVE CLASSIFICATION:

Class I*- CRITICAL VALVES- valves which are required to be opened immediately due to operational upset or unit trip

Class I- Open valves just prior to test and standby, valves need to be opened at the end of each test

Class II- Close valves up to 2 hours prior to each test (before Class I valves), re-open valves after Class I valves

Class III- Close valves at the beginning of the day and open at the end of the day

Class IV- Non-Critical Valves- verify normally closed valves are closed (and not leaking) and normally opened valves are open

LOCATION: CONDENSER CONNECTIONS- EAST BASEMENT

			LOCATION					VALVE POSITION		CHECKOFF		Downstream	
VALVE NUMBER	DESCRIPTION	P&ID	Floor	Near	Area	Termintaion Point	CLASS	Normal	Test	Initials		Temp (F)	NOTES:
TGC-BV-65	Drain from TDV to Htr	M2080A	2	ss-plat	Diag A #1	Cond TB end bsmt						F	
TGC-BV-67	Drain from TDV to Htr	M2080A	2	ss-plat	Diag A #1	Cond TB end bsmt						F	
FWA-MBV-189	Wrmup Drain from FW to Htr 6	M2035A			Diag A #2	Cond TB end bsmt						F	
TGC-MBV-31	RHT bowl drain to cond	M2080B	1	s-ehc	Diag A #3	Cond TB end bsmt						F	
TGC-MBV-37	Control Valve drain to cond.	M2080B	2	convlvs	Diag A #4	Cond TB end bsmt						F	
TGC-MBV-39	Control Valve drain to cond.	M2080B	2	convlvs	Diag A #5	Cond TB end bsmt						F	
TGC-MBV-40	Control Valve drain to cond.	M2080B	2	convlvs	Diag A #6	Cond TB end bsmt						F	
TGC-MBV-33	Stop Valve drain to cond	M2080B	2	stpvlvs	Diag A #7	Cond TB end bsmt						F	
TGC-MBV-34	Stop Valve drain to cond	M2080B	2	stpvlvs	Diag A #8	Cond TB end bsmt						F	
TGC-MBV-36	Stop Valve drain to cond	M2080B	2	stpvlvs	Diag A #9	Cond TB end bsmt						F	
TGC-MBV-35	Stop Valve drain to cond	M2080B	2	stpvlvs	Diag A #10	Cond TB end bsmt						F	
TGC-MBV-32	RHT bowl drain to cond	M2080B	1	s-ehc	Diag A #11	Cond TB end bsmt						F	
SGJ-MBV-18	CRH low point drains	M2071	1	s-ehc	Diag A #12	Cond TB end bsmt						F	
SGJ-MBV-14	HRH low point drains	M2071	1	s-ehc	Diag A #13	Cond TB end bsmt						F	
SGJ-MBV-16	HRH low point drains	M2071	1	s-ehc	Diag A #13	Cond TB end bsmt						F	
SGG-MBV-25	MS Byp to cond low pt drain	M2069	2	ne-cond	Diag A #14	Cond TB end bsmt						F	
TGC-MBV-38	Control Valve drain to cond	M2080B	2	convlvs	Diag A #15	Cond TB end bsmt						F	
TGC-MBV-49	MS lead drain to cond	M2080	1	sw-ehc	Diag A #16	Cond TB end bsmt						F	
TGC-ACV-4	TDV to cond	M2080A	2.5	stmslplt	Diag A #17	Cond TB end bsmt						F	
TGA-ABV-20	Equalizer valve	M2079	2		Diag A #18	Cond TB end bsmt						F	
TED-ACV-11	Htr 6A hi level dump	M2076	1	e-cond	Diag A #20	Cond TB end bsmt						F	
TED-ACV-12	Htr 6B hi level dump	M2076	1	e-cond	Diag A #21	Cond TB end bsmt						F	
TED-ACV-3	Htr 8A hi level dump	M2076	1	e-cond	Diag A #22	Cond TB end bsmt						F	
TED-ACV-4	Htr 8B hi level dump	M2076	1	e-cond	Diag A#24	Cond TB end bsmt						130 F	ESO
TED-ACV-8	Htr 7B hi level dump	M2076	1	e-cond	Diag A#25	Cond TB end bsmt						147 F	
TGC-ORF-8	SSH low point drain	M2080A	1		Diag A#26	Cond TB end bsmt						F	
TED-ACV-7	Htr 7A hi level dump	M2076	1	e-cond	Diag A#27	Cond TB end bsmt						F	
TEC-ACV-146	Drn frm LPextr stm to BFPT A	M2075	1	e-cond	Diag A#28	Cond TB end bsmt						F	

LOCATION: HP DRAIN HEADER

			LOCATION					VALVE POSITION		CHECKOFF		Downstream	
VALVE NUMBER	DESCRIPTION	P&ID	Floor	Near	Area	Termintaion Point	CLASS	Normal	Test	Initials		Temp (F)	NOTES:
SGI-MBV-178	Air heater sootblowers drain	M2070	1	E-EHC	DiagB1#1	HP Drain Header						F	
SGI-MBV-35	Boiler sootblowers drain	M2070	1	E-EHC	DiagB1#2	HP Drain Header						F	
TEC-ACV-14	4th stg extr (drain) to HTR 8A & 8	M2075	1	E-EHC	DiagB1#3	HP Drain Header						F	

IP7016685

TEC-ACV-80	4th stg extr (drain) to HTR 8A	M2075	1	E-EHC	DiagB1#4	HP Drain Header						F	
TEC-ACV-140	14th stg extr (drain) to BFPT 1B	M2075	1	E-EHC	DiagB1#5	HP Drain Header						F	
TEC-ACV-128	14th stg extr (drain) to DA	M2075	1	E-EHC	DiagB1#6	HP Drain Header						F	
TEC-ACV-116	14th stg extr (drain) to DA	M2075	1	E-EHC	DiagB1#7	HP Drain Header						F	
TEC-ACV-86	4th stg extr (drain) to HTR 8B	M2075	1	E-EHC	DiagB1#8	HP Drain Header						F	
TEC-ACV-92	11th stg extr (drain) to HTR 6A&B	M2075	1	E-EHC	DiagB1#9	HP Drain Header						F	
TEC-ACV-98	11th stg extr (drain) to HTR 6A	M2075	1	E-EHC	DiagB1#10	HP Drain Header						F	
TEC-ACV-101	11th stg extr (drain) to HTR 6B	M2075	1	E-EHC	DiagB1#11	HP Drain Header						F	
TEC-ACV-134	14th stg extr (drain) to BFPT 1A	M2075	1	E-EHC	DiagB1#12	HP Drain Header						F	
TEC-ACV-122	14th stg extr (drain) to BFPT 1A&	M2075	1	E-EHC	DiagB1#13	HP Drain Header						F	
TEC-ACV-110	14th stg extr (drain) to DA	M2075	1	E-EHC	DiagB1#14	HP Drain Header						F	
PSA-ORF-1	Aux Stm Hdr orificed drain line	M2008	1	S-EHC	DiagB1#15	HP Drain Header						F	

LOCATION: LP DRAIN HEADER

			LOCATION					VALVE POSITION		CHECKOFF		Downstream	
VALVE NUMBER	DESCRIPTION	P&ID	Floor	Near	Area	Termintaion Point	CLASS	Normal	Test	Initials		Temp (F)	NOTES:
TEC-ACV-2	HTR 2 extr from A hood (drain)	M2075	1	ne-cond	DiagB2#1	LP Drain Header						F	
TEC-ACV-6	HTR 2 extr from A hood (drain)	M2075	1	ne-cond	DiagB2#2	LP Drain Header						F	
TEC-ACV-10	HTR 3 extr from A hood (drain)	M2075	1	ne-cond	DiagB2#3	LP Drain Header						F	
TEC-ACV-14	HTR 3 extr from A hood (drain)	M2075	1	ne-cond	DiagB2#4	LP Drain Header						F	
TEC-ACV-18	HTR 4 extr from A hood (drain)	M2075	1	ne-cond	DiagB2#5	LP Drain Header						F	
TEC-ACV-22	HTR 4 extr from A hood (drain)	M2075	1	ne-cond	DiagB2#6	LP Drain Header						F	
TEC-ACV-50	Extr to HTR 2 from C hood drain	M2075	1	nw-cond	DiagB3#1	LP Drain Header						F	

CV Stem Leakoff hot +500°
No iso.

A BFPT HP Stem valve leakoff

IP7016686

TEC-ACV-54	Extr to HTR 2 from C hood drain	M2075	1	nw-cond	DiagB3#2	LP Drain Header						F	
TEC-ACV-58	Extr to HTR3 from C hood drain	M2075	1	nw-cond	DiagB3#3	LP Drain Header						F	
TEC-ACV-62	Extr to HTR3 from C hood drain	M2075	1	nw-cond	DiagB3#4	LP Drain Header						F	
TEC-ACV-66	Extr to HTR 4 from C hood drain	M2075	1	nw-cond	DiagB3#5	LP Drain Header						F	
TEC-ACV-70	Extr to HTR 4 from C hood drain	M2075	1	nw-cond	DiagB3#6	LP Drain Header						F	
TEC-ACV-26	Extr to HTR 2 from B hood drain	M2075	1	nw-cond	DiagB3#7	LP Drain Header						F	
TEC-ACV-30	Extr to HTR 2 from B hood drain	M2075	1	nw-cond	DiagB3#8	LP Drain Header						F	
TEC-ACV-34	Extr to HTR 3 from B hood drain	M2075	1	nw-cond	DiagB3#9	LP Drain Header						F	
TEC-ACV-38	Extr to HTR 3 from B hood drain	M2075	1	nw-cond	DiagB3#10	LP Drain Header						F	
TEC-ACV-42	Extr to HTR 4 from B hood drain	M2075	1	nw-cond	DiagB3#11	LP Drain Header						F	
TEC-ACV-46	Extr to HTR 4 from B hood drain	M2075	1	nw-cond	DiagB3#12	LP Drain Header						F	

LOCATION: CONDENSER CONNECTIONS-NORTH MEZZANINE

			LOCATION					VALVE POSITION		CHECKOFF		Downstream	
VALVE NUMBER	DESCRIPTION	P&ID	Floor	Near	Area	Termintaion Point	CLASS	Normal	Test	Initials		Temp (F)	NOTES:
FWA-ABV-303	BFPT "A" HP Stop Vlv Drain	M2035C	2	N-cond	Diag C #6	dwncmr drns hdr						175 F	150
FWA-ABV-309	BFPT"A"LP stp vlv below stdr	M2035C	2	N-cond	Diag C #7	Cond-A NorthMez						F	
FWA-ABV-305	BFPT"A" HP Stop Valve Drain	M2035C	2	N-cond	Diag C #8	Cond-A NorthMez						F	
FWA-ABV-311	BFPT"A" First Stage Drain	M2035C	2	ne-cnd	Diag C #9	Cond-A NorthMez						F	
TEF-BV-162	HTR 4 Vent to Condenser	M2078B	5	HTR4	Diag C #10	Cond-North Mezz						F	
TEF-BV-163	HTR 3 Vent to Condenser	M2078B	3	HTR3	Diag C #11	Cond-North Mezz						F	
TEF-BV-164	HTR 2 Vent to Condenser	M2078B	2	HTR2	Diag C #12	Cond-North Mezz						F	
FWA-ABV-312	BFPT"B" First Stage Drain	M2035C	2	nw-cnd	Diag C #13	Cond-C NorthMez						F	
FWA-ABV-306	BFPT"B" HP Stop Valve Drain	M2035C	2	N-cond	Diag C #14	Cond-C NorthMez						F	
FWA-ABV-310	BFPT"B"LP stpvlv below st dr	M2035C	2	N-cond	Diag C #15	Cond-C NorthMez						F	
FWA-ABV-304	BFPT"B" HP Stop Valve Drain	M2035C	2	N-cond	Diag C #16	dwncmr drns hdr						145 F	150

LOCATION: CONDENSER CONNECTIONS-NORTH BASEMENT (check on mezzanine level)

			LOCATION					VALVE POSITION		CHECKOFF		Downstream	
VALVE NUMBER	DESCRIPTION	P&ID	Floor	Near	Area	Termintaion Point	CLASS	Normal	Test	Initials		Temp (F)	NOTES:
TGC-ORF-11	Steam Seal Hdr Low Point Drain	M2080A	2	N-cond	A-cond	Cond-A North Basemt						F	
FWA-ABV-307	BFPT 1A Stpvlv above seat drn	M2035C	2	N-cond	A-cond	Cond-A North Basemt						F	
FWA-ABV-308	BFPT 1B Stpvlv above seat drn	M2035C	2	N-cond	C-cond	Cond-C North Basemt						F	

IP70166687

LOCATION: WEST SIDE BOILER DRAINS

VALVE NUMBER	DESCRIPTION	P&ID	LOCATION Floor	Near	Area	Termintaion Point	CLASS	VALVE POSITION Normal	Test	CHECKOFF Initials		Downstream Temp (F)	NOTES:
SGF-MBV-52	Roof Inlet header drain	M2068	4	fdr dck	west boiler	W boil drn bldwn hdr						F	
SGF-MBV-50	Sec SH Platen inlet drain header	M2068	4	fdr dck	west boiler	W boil drn bldwn hdr						F	
SGF-BV-48	Economizer discharge header drn	M2068	4	fdr dck	west boiler	W boil drn bldwn hdr						F	
SGF-MBV-46	Sec SH Intermediate inlet hdr drain	M2068	4	fdr dck	west boiler	W boil drn bldwn hdr						F	
SGF-MBV-44	Sec SH Intermediate inlet hdr drain	M2068	4	fdr dck	west boiler	W boil drn bldwn hdr						F	
PSA-TRP-16	Aux stm from drum and SSH stm t	M2008	14	S-boiler	south boiler	RH outlet bldwn hdr						F	
SGA-TRP-02	Main stm to Aux stm hdr drain trap	M2063A	16	Wboiler	west boiler	Mn Stm drip pkt drn						F	
SGF-BV-40	Reheater outlet header drain	M2068	4	fdr dck	west boiler	RH outlet hdr bldwn						F	
SGF-BV-38	Reheater outlet header drain	M2068	4	fdr dck	west boiler	RH outlet hdr bldwn						F	
SGF-MBV-36	Lower convect pass hdr drain	M2068	4	fdr dck	west boiler	W boil drn bldwn hdr						F	
SGF-BV-34	Reheater inlet header drain	M2068	4	fdr dck	west boiler	W boil drn bldwn hdr						F	
SGF-BV-31	Economizer inlet header drain	M2068	4	fdr dck	west boiler	W boil drn bldwn hdr						F	
SGA-BV-19	Drum level gage drain	M2063B	18	W-Drum	west boiler	W boil drn bldwn hdr						F	
SGA-BV-26	Drum level gage drain	M2063B	18	W-Drum	west boiler	W boil drn bldwn hdr						F	
SGF-MBV-29	Lower convect pass hdr drain	M2068	4	fdr dck	west boiler	W boil drn bldwn hdr						F	
SGF-MBV-42	Sec SH outlet header drain	M2068	4	fdr dck	west boiler	Blowdown Tank 1						F	
SGA-BV-32	Drum steam pressure gage drain	M2063B	18	W-Drum	west boiler	W boil drn bldwn hdr						F	

LOCATION: EAST SIDE BOILER DRAINS

VALVE NUMBER	DESCRIPTION	P&ID	LOCATION Floor	Near	Area	Termintaion Point	CLASS	VALVE POSITION Normal	Test	CHECKOFF Initials		Downstream Temp (F)	NOTES:
SGA-TRP-03	Drum to Aux stm drain stm trp	M2063B	18	S-boiler	east boiler	E boil drn bldwn hdr						F	
SGF-BV-54	Economizer discharge header drn	M2068	4	sub-fdr	east boiler	E boil drn bldwn hdr						F	
SGF-MBV-56	Lower convect pass hdr drain	M2068	4	sub-fdr	east boiler	E boil drn bldwn hdr						F	
SGF-MBV-58	Lower convect pass hdr drain	M2068	4	sub-fdr	east boiler	E boil drn bldwn hdr						F	
SGA-MBV-4	Drum continuous blowdown	M2068	18	E-drum	east boiler	E boil drn bldwn hdr						190 F	
PSA-TRP-01	Cold Reheat Aux Steam Supply	M2008	8	SE-boil	east elev	E boil drn bldwn hdr						F	

LOCATION: MAIN STEAM DRIP POCKET

VALVE NUMBER	DESCRIPTION	P&ID	LOCATION Floor	Near	Area	Termintaion Point	CLASS	VALVE POSITION Normal	Test	CHECKOFF Initials		Downstream Temp (F)	NOTES:
SGG-MBV-11	Main Steam to Blowdown Tank	M2069	2	SE-boil	NE-SV&CV	Blowdown Tank						245 F	NO
SGG-MBV-12	Main Steam to Blowdown Tank	M2069	2	SE-boil	NE-SV&CV	Blowdown Tank						— F	ISO
SGG-MBV-13	Main Steam to Blowdown Tank	M2069	2	SE-boil	NE-SV&CV	Blowdown Tank						170 F	
SGG-MBV-14	Main Steam to Blowdown Tank	M2069	2	SE-boil	NE-SV&CV	Blowdown Tank						— F	

LOCATION: DOWNCOMER DRAINS

VALVE NUMBER	DESCRIPTION	P&ID	LOCATION Floor	Near	Area	Termintaion Point	CLASS	VALVE POSITION Normal	Test	CHECKOFF Initials		Downstream Temp (F)	NOTES:
SGF-BV-59	Drum West End Downcomer	M2068	2	S-boiler	N of Htr 2	DwncmDrnBldnHdr						F	
SGF-BV-60	Drum West End Downcomer	M2068	2	S-boiler	N of Htr 2	DwncmDrnBldnHdr						F	
SGF-BV-61	Drum West Shell Downcomer	M2068	2	S-boiler	N of Htr 2	DwncmDrnBldnHdr						F	

IP7016688

SGF-BV-62	Drum West Shell Downcomer	M2068	2	S-boiler	N of Htr 2	DwncmDrnBldnHdr						F	
SGF-MBV-66	Downcomer Drain Manifold Drain	M2068	2	S-boiler	N of Htr 2	DwncmDrnBldnHdr						F	
SGF-BV-63	Drum Center Shell Downcomer	M2068	2	S-boiler	N of Htr 2	DwncmDrnBldnHdr						F	
SGF-BV-64	Drum Center Shell Downcomer	M2068	2	S-boiler	N of Htr 2	DwncmDrnBldnHdr						F	
SGF-BV-67	Drum East Shell Downcomer	M2068	2	S-boiler	N of Htr 2	DwncmDrnBldnHdr						F	
SGF-BV-68	Drum East Shell Downcomer	M2068	2	S-boiler	N of Htr 2	DwncmDrnBldnHdr						F	
SGF-BV-69	Drum East End Downcomer	M2068	2	S-boiler	N of Htr 2	DwncmDrnBldnHdr						F	
SGF-BV-70	Drum East End Downcomer	M2068	2	S-boiler	N of Htr 2	DwncmDrnBldnHdr						F	

LOCATION: SUPERHEAT BYPASS

			LOCATION					VALVE POSITION		CHECKOFF		Downstream	
VALVE NUMBER	DESCRIPTION	P&ID	Floor	Near	Area	Termintaion Point	CLASS	Normal	Test	Initials		Temp (F)	NOTES:
SGA-TRP-1	Superheat Bypass Drain Trap	M2063A	12	NW-boil	NW corner	Partial Byp Drn Cnd						F	
SGA-ACV-137	Superheat Bypass	M2063A	2	W-Cond	NW corner	C Condenser-West						F	

LOCATION: MISCELLANEOUS VALVES

			LOCATION					VALVE POSITION		CHECKOFF		Downstream	
VALVE NUMBER	DESCRIPTION	P&ID	Floor	Near	Area	Termintaion Point	CLASS	Normal	Test	Initials		Temp (F)	NOTES:
FWA-BV-299	Bootstrap Valve	M2035A	2	SW-boil	SW Htr 2							F	
FWC-ACV-28	DEA Recirc	M2037	2	W-Cond	NW corner	C Condenser-West						F	
TEC-ACV-152	1B BFPT Extraction Drain	M2075	2	W-Cond	NW corner	Cond-Basement						180 F	

LOCATION: VACUUM PUMPS

			LOCATION					VALVE POSITION		CHECKOFF		Downstream	
VALVE NUMBER	DESCRIPTION	P&ID	Floor	Near	Area	Termintaion Point	CLASS	Normal	Test	Initials		Temp (F)	NOTES:
HRB-P-1A	1A Vacuum Pump	M2021	2	SE-Boil	East Elevtr							F	
HRB-P-1B	1B Vacuum Pump	M2021	2	SE-Boil	East Elevtr							F	
HRB-P-1C	1C Vacuum Pump	M2021	2	SE-Boil	East Elevtr							F	
HRB-P-1D	1D Vacuum Pump	M2021	2	SE-Boil	East Elevtr							F	

LOCATION:

			LOCATION					VALVE POSITION		CHECKOFF		Downstream	
VALVE NUMBER	DESCRIPTION	P&ID	Floor	Near	Area	Termintaion Point	CLASS	Normal	Test	Initials		Temp (F)	NOTES:
TGA-ABV-2	Ventilator Valve	M2079	2	CV's	E A Cond	Atm - roof vents						F	
FWA-PS-70	BFP 1A Inlet Strainer DP	M2035A	2	N-Cond	BFPT Exh							F	
FWA-PS-71	BFP 1B Inlet Strainer DP	M2035A	2	N-Cond	BFPT Exh							F	
SGI-ABV-21	AH Soot Blower Drain	M2070	3	NE-Boil	Stairs	Cond						F	
SGI-ABV-22	AH Soot Blower Drain	M2070	3	NW-Boil	Stairs	Cond						F	
SGI-ABV-170	Boiler Soot Blower Drain	M2070	7	W-Boil		Cond						F	
SGI-ABV-171	Boiler Soot Blower Drain	M2070	7	E-Boil		Cond						F	
SGI-ABV-172	Boiler Soot Blower Drain	M2070	11	E-Boil	Backpass	Cond						F	
SGI-ABV-173	Boiler Soot Blower Drain	M2070	11	W-Boil	Backpass	Cond						F	
SGA-MBV-173	Economizer Recirc	M2063A	10.5	W-Boil	Backpass	Economizer inlet						F	
SGA-MBV-174	Economizer Recirc	M2063A	10.5	E-Boil	Backpass	Economizer inlet						F	

IP70166689

SGG-MCV-18	Main Steam Warming Line	M2069	2	E-CV'S		Cond						F	
SGG-MBV-25	Main Steam Line Drain	M2069	2	E-CV'S		Cond						F	
SGG-MBV-26	Main Steam Line Drain	M2069	2	E-CV'S		Cond						F	
SGG-MBV-55	Main Steam to BFPT Drain	M2069	2	E-CV'S		Cond						F	
SGG-MBV-56	Main Steam to BFPT Drain	M2069	2	E-CV'S		Cond						F	
PSA-ACV-60	Drum Aux Steam Supply	M2008	17	S-Boil		Aux						300 F	Both ISO ??
PSA-ACV-57	SSH Aux Steam Supply	M2008	17	W-Boil		Aux						320 F	

14:38

BBFP 2A S 190
d 320

2B S 195
d 330

2C S 188
d 318

CP A 425
B 420

IP70166690

Day 4-Test 7 Vaughan

Day 3-Test 6 T1235

IP7016691

TURBINE CYCLE PERFORMANCE TESTING | IGS Unit # 2 | Test # ____

***** CYCLE ISOLATION CHECKOFF SHEETS ***** | Date: _____ | Time: _____ | Name: _____

VALVE CLASSIFICATION:

Class I*- CRITICAL VALVES- valves which are required to be opened immediately due to operational upset or unit trip

Class I- Open valves just prior to test and standby, valves need to be opened at the end of each test

Class II- Close valves up to 2 hours prior to each test (before Class I valves), re-open valves after Class I valves

Class III- Close valves at the beginning of the day and open at the end of the day

Class IV- Non-Critical Valves- verify normally closed valves are closed (and not leaking) and normally opened valves are open

LOCATION: CONDENSER CONNECTIONS- EAST BASEMENT

			LOCATION					VALVE POSITION		CHECKOFF		Downstream	
VALVE NUMBER	DESCRIPTION	P&ID	Floor	Near	Area	Termintaion Point	CLASS	Normal	Test	Initials		Temp (F)	NOTES:
TGC-BV-65	Drain from TDV to Htr	M2080A	2	ss-plat	Diag A #1	Cond TB end bsmt						____F	
TGC-BV-67	Drain from TDV to Htr	M2080A	2	ss-plat	Diag A #1	Cond TB end bsmt						____F	
FWA-MBV-189	Wrmup Drain from FW to Htr 6	M2035A			Diag A #2	Cond TB end bsmt						____F	
TGC-MBV-31	RHT bowl drain to cond	M2080B	1	s-ehc	Diag A #3	Cond TB end bsmt						____F	
TGC-MBV-37	Control Valve drain to cond.	M2080B	2	convlvs	Diag A #4	Cond TB end bsmt						____F	
TGC-MBV-39	Control Valve drain to cond.	M2080B	2	convlvs	Diag A #5	Cond TB end bsmt						____F	
TGC-MBV-40	Control Valve drain to cond.	M2080B	2	convlvs	Diag A #6	Cond TB end bsmt						____F	
TGC-MBV-33	Stop Valve drain to cond	M2080B	2	stpvlvs	Diag A #7	Cond TB end bsmt						____F	
TGC-MBV-34	Stop Valve drain to cond	M2080B	2	stpvlvs	Diag A #8	Cond TB end bsmt						____F	
TGC-MBV-36	Stop Valve drain to cond	M2080B	2	stpvlvs	Diag A #9	Cond TB end bsmt						____F	
TGC-MBV-35	Stop Valve drain to cond	M2080B	2	stpvlvs	Diag A #10	Cond TB end bsmt						____F	
TGC-MBV-32	RHT bowl drain to cond	M2080B	1	s-ehc	Diag A #11	Cond TB end bsmt						____F	
SGJ-MBV-18	CRH low point drains	M2071	1	s-ehc	Diag A #12	Cond TB end bsmt						____F	
SGJ-MBV-14	HRH low point drains	M2071	1	s-ehc	Diag A #13	Cond TB end bsmt						____F	
SGJ-MBV-16	HRH low point drains	M2071	1	s-ehc	Diag A #13	Cond TB end bsmt						____F	
SGG-MBV-25	MS Byp to cond low pt drain	M2069	2	ne-cond	Diag A #14	Cond TB end bsmt						____F	
TGC-MBV-38	Control Valve drain to cond	M2080B	2	convlvs	Diag A #15	Cond TB end bsmt						____F	
TGC-MBV-49	MS lead drain to cond	M2080	1	sw-ehc	Diag A #16	Cond TB end bsmt						____F	
TGC-ACV-4	TDV to cond	M2080A	2.5	stmslplt	Diag A #17	Cond TB end bsmt						____F	
TGA-ABV-20	Equalizer valve	M2079	2		Diag A #18	Cond TB end bsmt						____F	
TED-ACV-11	Htr 6A hi level dump	M2076	1	e-cond	Diag A #20	Cond TB end bsmt						____F	
TED-ACV-12	Htr 6B hi level dump	M2076	1	e-cond	Diag A #21	Cond TB end bsmt						____F	
TED-ACV-3	Htr 8A hi level dump	M2076	1	e-cond	Diag A #22	Cond TB end bsmt						____F	
TED-ACV-4	Htr 8B hi level dump	M2076	1	e-cond	Diag A#24	Cond TB end bsmt						____F	
TED-ACV-8	Htr 7B hi level dump	M2076	1	e-cond	Diag A#25	Cond TB end bsmt						____F	
TGC-ORF-8	SSH low point drain	M2080A	1		Diag A#26	Cond TB end bsmt						____F	
TED-ACV-7	Htr 7A hi level dump	M2076	1	e-cond	Diag A#27	Cond TB end bsmt						____F	
TEC-ACV-146	Drn frm LPextr stm to BFPT A	M2075	1	e-cond	Diag A#28	Cond TB end bsmt						____F	

LOCATION: HP DRAIN HEADER

			LOCATION					VALVE POSITION		CHECKOFF		Downstream	
VALVE NUMBER	DESCRIPTION	P&ID	Floor	Near	Area	Termintaion Point	CLASS	Normal	Test	Initials		Temp (F)	NOTES:
SGI-MBV-178	Air heater sootblowers drain	M2070	1	E-EHC	DiagB1#1	HP Drain Header						____F	
SGI-MBV-35	Boiler sootblowers drain	M2070	1	E-EHC	DiagB1#2	HP Drain Header						____F	
TEC-ACV-14	4th stg extr (drain) to HTR 8A & 8	M2075	1	E-EHC	DiagB1#3	HP Drain Header						____F	

IP7016692

TEC-ACV-80	4th stg extr (drain) to HTR 8A	M2075	1	E-EHC	DiagB1#4	HP Drain Header						F	
TEC-ACV-140	14th stg extr (drain) to BFPT 1B	M2075	1	E-EHC	DiagB1#5	HP Drain Header						F	
TEC-ACV-128	14th stg extr (drain) to DA	M2075	1	E-EHC	DiagB1#6	HP Drain Header						F	
TEC-ACV-116	14th stg extr (drain) to DA	M2075	1	E-EHC	DiagB1#7	HP Drain Header						F	
TEC-ACV-86	4th stg extr (drain) to HTR 8B	M2075	1	E-EHC	DiagB1#8	HP Drain Header						F	
TEC-ACV-92	11th stg extr (drain) to HTR 6A&B	M2075	1	E-EHC	DiagB1#9	HP Drain Header						F	
TEC-ACV-98	11th stg extr (drain) to HTR 6A	M2075	1	E-EHC	DiagB1#10	HP Drain Header						F	
TEC-ACV-101	11th stg extr (drain) to HTR 6B	M2075	1	E-EHC	DiagB1#11	HP Drain Header						F	
TEC-ACV-134	14th stg extr (drain) to BFPT 1A	M2075	1	E-EHC	DiagB1#12	HP Drain Header						F	
TEC-ACV-122	14th stg extr (drain) to BFPT 1A&	M2075	1	E-EHC	DiagB1#13	HP Drain Header						F	
TEC-ACV-110	14th stg extr (drain) to DA	M2075	1	E-EHC	DiagB1#14	HP Drain Header						F	
PSA-ORF-1	Aux Stm Hdr orificed drain line	M2008	1	S-EHC	DiagB1#15	HP Drain Header						F	
LOCATION: LP DRAIN HEADER													
					LOCATION			VALVE POSITION		CHECKOFF		Downstream	
VALVE NUMBER	DESCRIPTION	P&ID	Floor	Near	Area	Termintaion Point	CLASS	Normal	Test	Initials		Temp (F)	NOTES:
TEC-ACV-2	HTR 2 extr from A hood (drain)	M2075	1	ne-cond	DiagB2#1	LP Drain Header						F	
TEC-ACV-6	HTR 2 extr from A hood (drain)	M2075	1	ne-cond	DiagB2#2	LP Drain Header						F	
TEC-ACV-10	HTR 3 extr from A hood (drain)	M2075	1	ne-cond	DiagB2#3	LP Drain Header						F	
TEC-ACV-14	HTR 3 extr from A hood (drain)	M2075	1	ne-cond	DiagB2#4	LP Drain Header						F	
TEC-ACV-18	HTR 4 extr from A hood (drain)	M2075	1	ne-cond	DiagB2#5	LP Drain Header						F	
TEC-ACV-22	HTR 4 extr from A hood (drain)	M2075	1	ne-cond	DiagB2#6	LP Drain Header						F	
TEC-ACV-50	Extr to HTR 2 from C hood drain	M2075	1	nw-cond	DiagB3#1	LP Drain Header						F	

IP70166993

TEC-ACV-54	Extr to HTR 2 from C hood drain	M2075	1	nw-cond	DiagB3#2	LP Drain Header						F	
TEC-ACV-58	Extr to HTR3 from C hood drain	M2075	1	nw-cond	DiagB3#3	LP Drain Header						F	
TEC-ACV-62	Extr to HTR3 from C hood drain	M2075	1	nw-cond	DiagB3#4	LP Drain Header						F	
TEC-ACV-66	Extr to HTR 4 from C hood drain	M2075	1	nw-cond	DiagB3#5	LP Drain Header						F	
TEC-ACV-70	Extr to HTR 4 from C hood drain	M2075	1	nw-cond	DiagB3#6	LP Drain Header						F	
TEC-ACV-26	Extr to HTR 2 from B hood drain	M2075	1	nw-cond	DiagB3#7	LP Drain Header						F	
TEC-ACV-30	Extr to HTR 2 from B hood drain	M2075	1	nw-cond	DiagB3#8	LP Drain Header						F	
TEC-ACV-34	Extr to HTR 3 from B hood drain	M2075	1	nw-cond	DiagB3#9	LP Drain Header						F	
TEC-ACV-38	Extr to HTR 3 from B hood drain	M2075	1	nw-cond	DiagB3#10	LP Drain Header						F	
TEC-ACV-42	Extr to HTR 4 from B hood drain	M2075	1	nw-cond	DiagB3#11	LP Drain Header						F	
TEC-ACV-46	Extr to HTR 4 from B hood drain	M2075	1	nw-cond	DiagB3#12	LP Drain Header						F	

LOCATION: CONDENSER CONNECTIONS-NORTH MEZZANINE

			LOCATION					VALVE POSITION		CHECKOFF		Downstream	
VALVE NUMBER	DESCRIPTION	P&ID	Floor	Near	Area	Termintaion Point	CLASS	Normal	Test	Initials		Temp (F)	NOTES:
FWA-ABV-303	BFPT "A" HP Stop Vlv Drain	M2035C	2	N-cond	Diag C #6	dwncmr drns hdr						F	
FWA-ABV-309	BFPT"A"LP stp vlv below stdr	M2035C	2	N-cond	Diag C #7	Cond-A NorthMez						F	
FWA-ABV-305	BFPT"A" HP Stop Valve Drain	M2035C	2	N-cond	Diag C #8	Cond-A NorthMez						F	
FWA-ABV-311	BFPT"A" First Stage Drain	M2035C	2	ne-cnd	Diag C #9	Cond-A NorthMez						F	
TEF-BV-162	HTR 4 Vent to Condenser	M2078B	5	HTR4	Diag C #10	Cond-North Mezz						F	
TEF-BV-163	HTR 3 Vent to Condenser	M2078B	3	HTR3	Diag C #11	Cond-North Mezz						F	
TEF-BV-164	HTR 2 Vent to Condenser	M2078B	2	HTR2	Diag C #12	Cond-North Mezz						F	
FWA-ABV-312	BFPT"B" First Stage Drain	M2035C	2	nw-cnd	Diag C #13	Cond-C NorthMez						F	
FWA-ABV-306	BFPT"B" HP Stop Valve Drain	M2035C	2	N-cond	Diag C #14	Cond-C NorthMez						F	
FWA-ABV-310	BFPT"B"LP stpvlv below st dr	M2035C	2	N-cond	Diag C #15	Cond-C NorthMez						F	
FWA-ABV-304	BFPT"B" HP Stop Valve Drain	M2035C	2	N-cond	Diag C #16	dwncmr drns hdr						F	

LOCATION: CONDENSER CONNECTIONS-NORTH BASEMENT (check on mezzanine level)

			LOCATION					VALVE POSITION		CHECKOFF		Downstream	
VALVE NUMBER	DESCRIPTION	P&ID	Floor	Near	Area	Termintaion Point	CLASS	Normal	Test	Initials		Temp (F)	NOTES:
TGC-ORF-11	Steam Seal Hdr Low Point Drain	M2080A	2	N-cond	A-cond	Cond-A North Basemt						F	
FWA-ABV-307	BFPT 1A Stpvlv above seat drn	M2035C	2	N-cond	A-cond	Cond-A North Basemt						F	
FWA-ABV-308	BFPT 1B Stpvlv above seat drn	M2035C	2	N-cond	C-cond	Cond-C North Basemt						F	

IP7016694

LOCATION: WEST SIDE BOILER DRAINS

VALVE NUMBER	DESCRIPTION	P&ID	LOCATION Floor	Near	Area	Termintaion Point	CLASS	VALVE POSITION Normal	Test	CHECKOFF Initials		Downstream Temp (F)	NOTES:
SGF-MBV-52	Roof Inlet header drain	M2068	4	fdr dck	west boiler	W boil drn bldwn hdr						F	
SGF-MBV-50	Sec SH Platen inlet drain header	M2068	4	fdr dck	west boiler	W boil drn bldwn hdr						F	
SGF-BV-48	Economizer discharge header drn	M2068	4	fdr dck	west boiler	W boil drn bldwn hdr						F	
SGF-MBV-46	Sec SH Intermediate inlet hdr drain	M2068	4	fdr dck	west boiler	W boil drn bldwn hdr						F	
SGF-MBV-44	Sec SH Intermediate inlet hdr drain	M2068	4	fdr dck	west boiler	W boil drn bldwn hdr						F	
PSA-TRP-16	Aux stm from drum and SSH stm t	M2008	14	S-boiler	south boiler	RH outlet bldwn hdr						F	
SGA-TRP-02	Main stm to Aux stm hdr drain trap	M2063A	16	Wboiler	west boiler	Mn Stm drip pkt drn						F	
SGF-BV-40	Reheater outlet header drain	M2068	4	fdr dck	west boiler	RH outlet hdr bldwn						F	
SGF-BV-38	Reheater outlet header drain	M2068	4	fdr dck	west boiler	RH outlet hdr bldwn						F	
SGF-MBV-36	Lower convect pass hdr drain	M2068	4	fdr dck	west boiler	W boil drn bldwn hdr						F	
SGF-BV-34	Reheater inlet header drain	M2068	4	fdr dck	west boiler	W boil drn bldwn hdr						F	
SGF-BV-31	Economizer inlet header drain	M2068	4	fdr dck	west boiler	W boil drn bldwn hdr						F	
SGA-BV-19	Drum level gage drain	M2063B	18	W-Drum	west boiler	W boil drn bldwn hdr						F	
SGA-BV-26	Drum level gage drain	M2063B	18	W-Drum	west boiler	W boil drn bldwn hdr						F	
SGF-MBV-29	Lower convect pass hdr drain	M2068	4	fdr dck	west boiler	W boil drn bldwn hdr						F	
SGF-MBV-42	Sec SH outlet header drain	M2068	4	fdr dck	west boiler	Blowdown Tank 1						F	
SGA-BV-32	Drum steam pressure gage drain	M2063B	18	W-Drum	west boiler	W boil drn bldwn hdr						F	

LOCATION: EAST SIDE BOILER DRAINS

VALVE NUMBER	DESCRIPTION	P&ID	LOCATION Floor	Near	Area	Termintaion Point	CLASS	VALVE POSITION Normal	Test	CHECKOFF Initials		Downstream Temp (F)	NOTES:
SGA-TRP-03	Drum to Aux stm drain stm trp	M2063B	18	S-boiler	east boiler	E boil drn bldwn hdr						F	
SGF-BV-54	Economizer discharge header drn	M2068	4	sub-fdr	east boiler	E boil drn bldwn hdr						F	
SGF-MBV-56	Lower convect pass hdr drain	M2068	4	sub-fdr	east boiler	E boil drn bldwn hdr						F	
SGF-MBV-58	Lower convect pass hdr drain	M2068	4	sub-fdr	east boiler	E boil drn bldwn hdr						F	
SGA-MBV-4	Drum continuous blowdown	M2068	18	E-drum	east boiler	E boil drn bldwn hdr						F	
PSA-TRP-01	Cold Reheat Aux Steam Supply	M2008	8	SE-boil	east elev	E boil drn bldwn hdr						F	

LOCATION: MAIN STEAM DRIP POCKET

VALVE NUMBER	DESCRIPTION	P&ID	LOCATION Floor	Near	Area	Termintaion Point	CLASS	VALVE POSITION Normal	Test	CHECKOFF Initials		Downstream Temp (F)	NOTES:
SGG-MBV-11	Main Steam to Blowdown Tank	M2069	2	SE-boil	NE-SV&CV	Blowdown Tank						F	
SGG-MBV-12	Main Steam to Blowdown Tank	M2069	2	SE-boil	NE-SV&CV	Blowdown Tank						F	
SGG-MBV-13	Main Steam to Blowdown Tank	M2069	2	SE-boil	NE-SV&CV	Blowdown Tank						F	
SGG-MBV-14	Main Steam to Blowdown Tank	M2069	2	SE-boil	NE-SV&CV	Blowdown Tank						F	

LOCATION: DOWNCOMER DRAINS

VALVE NUMBER	DESCRIPTION	P&ID	LOCATION Floor	Near	Area	Termintaion Point	CLASS	VALVE POSITION Normal	Test	CHECKOFF Initials		Downstream Temp (F)	NOTES:
SGF-BV-59	Drum West End Downcomer	M2068	2	S-boiler	N of Htr 2	DwncmDrnBldnHdr						F	
SGF-BV-60	Drum West End Downcomer	M2068	2	S-boiler	N of Htr 2	DwncmDrnBldnHdr						F	
SGF-BV-61	Drum West Shell Downcomer	M2068	2	S-boiler	N of Htr 2	DwncmDrnBldnHdr						F	

IP7016695

SGF-BV-62	Drum West Shell Downcomer	M2068	2	S-boiler	N of Htr 2	DwncmDrnBldnHdr						F	
SGF-MBV-66	Downcomer Drain Manifold Drain	M2068	2	S-boiler	N of Htr 2	DwncmDrnBldnHdr						F	
SGF-BV-63	Drum Center Shell Downcomer	M2068	2	S-boiler	N of Htr 2	DwncmDrnBldnHdr						F	
SGF-BV-64	Drum Center Shell Downcomer	M2068	2	S-boiler	N of Htr 2	DwncmDrnBldnHdr						F	
SGF-BV-67	Drum East Shell Downcomer	M2068	2	S-boiler	N of Htr 2	DwncmDrnBldnHdr						F	
SGF-BV-68	Drum East Shell Downcomer	M2068	2	S-boiler	N of Htr 2	DwncmDrnBldnHdr						F	
SGF-BV-69	Drum East End Downcomer	M2068	2	S-boiler	N of Htr 2	DwncmDrnBldnHdr						F	
SGF-BV-70	Drum East End Downcomer	M2068	2	S-boiler	N of Htr 2	DwncmDrnBldnHdr						F	

LOCATION: SUPERHEAT BYPASS

			LOCATION					VALVE POSITION		CHECKOFF		Downstream	
VALVE NUMBER	DESCRIPTION	P&ID	Floor	Near	Area	Termintaion Point	CLASS	Normal	Test	Initials		Temp (F)	NOTES:
SGA-TRP-1	Superheat Bypass Drain Trap	M2063A	12	NW-boil	NW corner	Partial Byp Drn Cnd						F	
SGA-ACV-137	Superheat Bypass	M2063A	2	W-Cond	NW corner	C Condenser-West						F	

LOCATION: MISCELLANEOUS VALVES

			LOCATION					VALVE POSITION		CHECKOFF		Downstream	
VALVE NUMBER	DESCRIPTION	P&ID	Floor	Near	Area	Termintaion Point	CLASS	Normal	Test	Initials		Temp (F)	NOTES:
FWA-BV-299	Bootstrap Valve	M2035A	2	SW-boil	SW Htr 2							F	
FWC-ACV-28	DEA Recirc	M2037	2	W-Cond	NW corner	C Condenser-West						F	
TEC-ACV-152	1B BFPT Extraction Drain	M2075	2	W-Cond	NW corner	Cond-Basement						F	

LOCATION: VACUUM PUMPS

			LOCATION					VALVE POSITION		CHECKOFF		Downstream	
VALVE NUMBER	DESCRIPTION	P&ID	Floor	Near	Area	Termintaion Point	CLASS	Normal	Test	Initials		Temp (F)	NOTES:
HRB-P-1A	1A Vacuum Pump	M2021	2	SE-Boil	East Elevtr							F	
HRB-P-1B	1B Vacuum Pump	M2021	2	SE-Boil	East Elevtr							F	
HRB-P-1C	1C Vacuum Pump	M2021	2	SE-Boil	East Elevtr							F	
HRB-P-1D	1D Vacuum Pump	M2021	2	SE-Boil	East Elevtr							F	

LOCATION:

			LOCATION					VALVE POSITION		CHECKOFF		Downstream	
VALVE NUMBER	DESCRIPTION	P&ID	Floor	Near	Area	Termintaion Point	CLASS	Normal	Test	Initials		Temp (F)	NOTES:
TGA-ABV-2	Ventilator Valve	M2079	2	CV's	E A Cond	Atm - roof vents						F	
FWA-PS-70	BFP 1A Inlet Strainer DP	M2035A	2	N-Cond	BFPT Exh							F	
FWA-PS-71	BFP 1B Inlet Strainer DP	M2035A	2	N-Cond	BFPT Exh							F	
SGI-ABV-21	AH Soot Blower Drain	M2070	3	NE-Boil	Stairs	Cond						F	
SGI-ABV-22	AH Soot Blower Drain	M2070	3	NW-Boil	Stairs	Cond						F	
SGI-ABV-170	Boiler Soot Blower Drain	M2070	7	W-Boil		Cond						F	
SGI-ABV-171	Boiler Soot Blower Drain	M2070	7	E-Boil		Cond						F	
SGI-ABV-172	Boiler Soot Blower Drain	M2070	11	E-Boil	Backpass	Cond						F	
SGI-ABV-173	Boiler Soot Blower Drain	M2070	11	W-Boil	Backpass	Cond						F	
SGA-MBV-173	Economizer Recirc	M2063A	10.5	W-Boil	Backpass	Economizer inlet						F	
SGA-MBV-174	Economizer Recirc	M2063A	10.5	E-Boil	Backpass	Economizer inlet						F	

IP70166696

SGG-MCV-18	Main Steam Warming Line	M2069	2	E-CV'S		Cond						F	
SGG-MBV-25	Main Steam Line Drain	M2069	2	E-CV'S		Cond						F	
SGG-MBV-26	Main Steam Line Drain	M2069	2	E-CV'S		Cond						F	
SGG-MBV-55	Main Steam to BFPT Drain	M2069	2	E-CV'S		Cond						F	
SGG-MBV-56	Main Steam to BFPT Drain	M2069	2	E-CV'S		Cond						F	
PSA-ACV-60	Drum Aux Steam Supply	M2008	17	S-Boil		Aux						F	
PSA-ACV-57	SSH Aux Steam Supply	M2008	17	W-Boil		Aux						F	

IP7016697

Day 4 - Test 8 Vindsvoo

IP7016698

TURBINE CYCLE PERFORMANCE TESTING	IGS Unit # 2	Test # _____
*** CYCLE ISOLATION CHECKOFF SHEETS ***	Date: _____	Time: _____ Name: _____

VALVE CLASSIFICATION:

Class I*- **CRITICAL VALVES-** valves which are required to be opened immediately due to operational upset or unit trip

Class I- Open valves just prior to test and standby, valves need to be opened at the end of each test

Class II- Close valves up to 2 hours prior to each test (before Class I valves), re-open valves after Class I valves

Class III- Close valves at the beginning of the day and open at the end of the day

Class IV- Non-Critical Valves- verify normally closed valves are closed (and not leaking) and normally opened valves are open

LOCATION: CONDENSER CONNECTIONS- EAST BASEMENT

			LOCATION					VALVE POSITION		CHECKOFF		Downstream	
VALVE NUMBER	DESCRIPTION	P&ID	Floor	Near	Area	Termintaion Point	CLASS	Normal	Test	Initials		Temp (F)	NOTES:
TGC-BV-65	Drain from TDV to Htr	M2080A	2	ss-plat	Diag A #1	Cond TB end bsmt						____F	
TGC-BV-67	Drain from TDV to Htr	M2080A	2	ss-plat	Diag A #1	Cond TB end bsmt						____F	
FWA-MBV-189	Wrmup Drain from FW to Htr 6	M2035A			Diag A #2	Cond TB end bsmt						____F	
TGC-MBV-31	RHT bowl drain to cond	M2080B	1	s-ehc	Diag A #3	Cond TB end bsmt						____F	
TGC-MBV-37	Control Valve drain to cond.	M2080B	2	convlvs	Diag A #4	Cond TB end bsmt						____F	
TGC-MBV-39	Control Valve drain to cond.	M2080B	2	convlvs	Diag A #5	Cond TB end bsmt						____F	
TGC-MBV-40	Control Valve drain to cond.	M2080B	2	convlvs	Diag A #6	Cond TB end bsmt						____F	
TGC-MBV-33	Stop Valve drain to cond	M2080B	2	stpvlvs	Diag A #7	Cond TB end bsmt						____F	
TGC-MBV-34	Stop Valve drain to cond	M2080B	2	stpvlvs	Diag A #8	Cond TB end bsmt						____F	
TGC-MBV-36	Stop Valve drain to cond	M2080B	2	stpvlvs	Diag A #9	Cond TB end bsmt						____F	
TGC-MBV-35	Stop Valve drain to cond	M2080B	2	stpvlvs	Diag A #10	Cond TB end bsmt						____F	
TGC-MBV-32	RHT bowl drain to cond	M2080B	1	s-ehc	Diag A #11	Cond TB end bsmt						____F	
SGJ-MBV-18	CRH low point drains	M2071	1	s-ehc	Diag A #12	Cond TB end bsmt						____F	
SGJ-MBV-14	HRH low point drains	M2071	1	s-ehc	Diag A #13	Cond TB end bsmt						____F	
SGJ-MBV-16	HRH low point drains	M2071	1	s-ehc	Diag A #13	Cond TB end bsmt						____F	
SGG-MBV-25	MS Byp to cond low pt drain	M2069	2	ne-cond	Diag A #14	Cond TB end bsmt						____F	
TGC-MBV-38	Control Valve drain to cond	M2080B	2	convlvs	Diag A #15	Cond TB end bsmt						____F	
TGC-MBV-49	MS lead drain to cond	M2080	1	sw-ehc	Diag A #16	Cond TB end bsmt						____F	
TGC-ACV-4	TDV to cond	M2080A	2.5	stmslplt	Diag A #17	Cond TB end bsmt						____F	
TGA-ABV-20	Equalizer valve	M2079	2		Diag A #18	Cond TB end bsmt						____F	
TED-ACV-11	Htr 6A hi level dump	M2076	1	e-cond	Diag A #20	Cond TB end bsmt						____F	
TED-ACV-12	Htr 6B hi level dump	M2076	1	e-cond	Diag A #21	Cond TB end bsmt						____F	
TED-ACV-3	Htr 8A hi level dump	M2076	1	e-cond	Diag A #22	Cond TB end bsmt						____F	
TED-ACV-4	Htr 8B hi level dump	M2076	1	e-cond	Diag A#24	Cond TB end bsmt						____F	
TED-ACV-8	Htr 7B hi level dump	M2076	1	e-cond	Diag A#25	Cond TB end bsmt						____F	
TGC-ORF-8	SSH low point drain	M2080A	1		Diag A#26	Cond TB end bsmt						____F	
TED-ACV-7	Htr 7A hi level dump	M2076	1	e-cond	Diag A#27	Cond TB end bsmt						____F	
TEC-ACV-146	Drn frm LPextr stm to BFPT A	M2075	1	e-cond	Diag A#28	Cond TB end bsmt						____F	

LOCATION: HP DRAIN HEADER

			LOCATION					VALVE POSITION		CHECKOFF		Downstream	
VALVE NUMBER	DESCRIPTION	P&ID	Floor	Near	Area	Termintaion Point	CLASS	Normal	Test	Initials		Temp (F)	NOTES:
SGI-MBV-178	Air heater sootblowers drain	M2070	1	E-EHC	DiagB1#1	HP Drain Header						____F	
SGI-MBV-35	Boiler sootblowers drain	M2070	1	E-EHC	DiagB1#2	HP Drain Header						____F	
TEC-ACV-14	4th stg extr (drain) to HTR 8A & 8	M2075	1	E-EHC	DiagB1#3	HP Drain Header						____F	

IP7016699

TEC-ACV-80	4th stg extr (drain) to HTR 8A	M2075	1	E-EHC	DiagB1#4	HP Drain Header						F	
TEC-ACV-140	14th stg extr (drain) to BFPT 1B	M2075	1	E-EHC	DiagB1#5	HP Drain Header						F	
TEC-ACV-128	14th stg extr (drain) to DA	M2075	1	E-EHC	DiagB1#6	HP Drain Header						F	
TEC-ACV-116	14th stg extr (drain) to DA	M2075	1	E-EHC	DiagB1#7	HP Drain Header						F	
TEC-ACV-86	4th stg extr (drain) to HTR 8B	M2075	1	E-EHC	DiagB1#8	HP Drain Header						F	
TEC-ACV-92	11th stg extr (drain) to HTR 6A&B	M2075	1	E-EHC	DiagB1#9	HP Drain Header						F	
TEC-ACV-98	11th stg extr (drain) to HTR 6A	M2075	1	E-EHC	DiagB1#10	HP Drain Header						F	
TEC-ACV-101	11th stg extr (drain) to HTR 6B	M2075	1	E-EHC	DiagB1#11	HP Drain Header						F	
TEC-ACV-134	14th stg extr (drain) to BFPT 1A	M2075	1	E-EHC	DiagB1#12	HP Drain Header						F	
TEC-ACV-122	14th stg extr (drain) to BFPT 1A&	M2075	1	E-EHC	DiagB1#13	HP Drain Header						F	
TEC-ACV-110	14th stg extr (drain) to DA	M2075	1	E-EHC	DiagB1#14	HP Drain Header						F	
PSA-ORF-1	Aux Stm Hdr orificed drain line	M2008	1	S-EHC	DiagB1#15	HP Drain Header						F	
LOCATION: LP DRAIN HEADER													
					LOCATION			VALVE POSITION		CHECKOFF		Downstream	
VALVE NUMBER	DESCRIPTION	P&ID	Floor	Near	Area	Termintaion Point	CLASS	Normal	Test	Initials		Temp (F)	NOTES:
TEC-ACV-2	HTR 2 extr from A hood (drain)	M2075	1	ne-cond	DiagB2#1	LP Drain Header						F	
TEC-ACV-6	HTR 2 extr from A hood (drain)	M2075	1	ne-cond	DiagB2#2	LP Drain Header						F	
TEC-ACV-10	HTR 3 extr from A hood (drain)	M2075	1	ne-cond	DiagB2#3	LP Drain Header						F	
TEC-ACV-14	HTR 3 extr from A hood (drain)	M2075	1	ne-cond	DiagB2#4	LP Drain Header						F	
TEC-ACV-18	HTR 4 extr from A hood (drain)	M2075	1	ne-cond	DiagB2#5	LP Drain Header						F	
TEC-ACV-22	HTR 4 extr from A hood (drain)	M2075	1	ne-cond	DiagB2#6	LP Drain Header						F	
TEC-ACV-50	Extr to HTR 2 from C hood drain	M2075	1	nw-cond	DiagB3#1	LP Drain Header						F	

IP7016700

TEC-ACV-54	Extr to HTR 2 from C hood drain	M2075	1	nw-cond	DiagB3#2	LP Drain Header						F	
TEC-ACV-58	Extr to HTR3 from C hood drain	M2075	1	nw-cond	DiagB3#3	LP Drain Header						F	
TEC-ACV-62	Extr to HTR3 from C hood drain	M2075	1	nw-cond	DiagB3#4	LP Drain Header						F	
TEC-ACV-66	Extr to HTR 4 from C hood drain	M2075	1	nw-cond	DiagB3#5	LP Drain Header						F	
TEC-ACV-70	Extr to HTR 4 from C hood drain	M2075	1	nw-cond	DiagB3#6	LP Drain Header						F	
TEC-ACV-26	Extr to HTR 2 from B hood drain	M2075	1	nw-cond	DiagB3#7	LP Drain Header						F	
TEC-ACV-30	Extr to HTR 2 from B hood drain	M2075	1	nw-cond	DiagB3#8	LP Drain Header						F	
TEC-ACV-34	Extr to HTR 3 from B hood drain	M2075	1	nw-cond	DiagB3#9	LP Drain Header						F	
TEC-ACV-38	Extr to HTR 3 from B hood drain	M2075	1	nw-cond	DiagB3#10	LP Drain Header						F	
TEC-ACV-42	Extr to HTR 4 from B hood drain	M2075	1	nw-cond	DiagB3#11	LP Drain Header						F	
TEC-ACV-46	Extr to HTR 4 from B hood drain	M2075	1	nw-cond	DiagB3#12	LP Drain Header						F	

LOCATION: CONDENSER CONNECTIONS-NORTH MEZZANINE

			LOCATION					VALVE POSITION		CHECKOFF		Downstream	
VALVE NUMBER	DESCRIPTION	P&ID	Floor	Near	Area	Termintaion Point	CLASS	Normal	Test	Initials		Temp (F)	NOTES:
FWA-ABV-303	BFPT "A" HP Stop Vlv Drain	M2035C	2	N-cond	Diag C #6	dwncmr drns hdr						F	
FWA-ABV-309	BFPT"A"LP stp vlv below stdr	M2035C	2	N-cond	Diag C #7	Cond-A NorthMez						F	
FWA-ABV-305	BFPT"A" HP Stop Valve Drain	M2035C	2	N-cond	Diag C #8	Cond-A NorthMez						F	
FWA-ABV-311	BFPT"A" First Stage Drain	M2035C	2	ne-cnd	Diag C #9	Cond-A NorthMez						F	
TEF-BV-162	HTR 4 Vent to Condenser	M2078B	5	HTR4	Diag C #10	Cond-North Mezz						F	
TEF-BV-163	HTR 3 Vent to Condenser	M2078B	3	HTR3	Diag C #11	Cond-North Mezz						F	
TEF-BV-164	HTR 2 Vent to Condenser	M2078B	2	HTR2	Diag C #12	Cond-North Mezz						F	
FWA-ABV-312	BFPT"B" First Stage Drain	M2035C	2	nw-cnd	Diag C #13	Cond-C NorthMez						F	
FWA-ABV-306	BFPT"B" HP Stop Valve Drain	M2035C	2	N-cond	Diag C #14	Cond-C NorthMez						F	
FWA-ABV-310	BFPT"B"LP stpvlv below st dr	M2035C	2	N-cond	Diag C #15	Cond-C NorthMez						F	
FWA-ABV-304	BFPT"B" HP Stop Valve Drain	M2035C	2	N-cond	Diag C #16	dwncmr drns hdr						F	

LOCATION: CONDENSER CONNECTIONS-NORTH BASEMENT (check on mezzanine level)

			LOCATION					VALVE POSITION		CHECKOFF		Downstream	
VALVE NUMBER	DESCRIPTION	P&ID	Floor	Near	Area	Termintaion Point	CLASS	Normal	Test	Initials		Temp (F)	NOTES:
TGC-ORF-11	Steam Seal Hdr Low Point Drain	M2080A	2	N-cond	A-cond	Cond-A North Basemt						F	
FWA-ABV-307	BFPT 1A Stpvlv above seat drn	M2035C	2	N-cond	A-cond	Cond-A North Basemt						F	
FWA-ABV-308	BFPT 1B Stpvlv above seat drn	M2035C	2	N-cond	C-cond	Cond-C North Basemt						F	

IP7016701

LOCATION: WEST SIDE BOILER DRAINS

VALVE NUMBER	DESCRIPTION	P&ID	LOCATION Floor	Near	Area	Termintaion Point	CLASS	VALVE POSITION Normal	Test	CHECKOFF Initials		Downstream Temp (F)	NOTES:
SGF-MBV-52	Roof Inlet header drain	M2068	4	fdr dck	west boiler	W boil drn bldwn hdr						F	
SGF-MBV-50	Sec SH Platen inlet drain header	M2068	4	fdr dck	west boiler	W boil drn bldwn hdr						F	
SGF-BV-48	Economizer discharge header drn	M2068	4	fdr dck	west boiler	W boil drn bldwn hdr						F	
SGF-MBV-46	Sec SH Intermediate inlet hdr drain	M2068	4	fdr dck	west boiler	W boil drn bldwn hdr						F	
SGF-MBV-44	Sec SH Intermediate inlet hdr drain	M2068	4	fdr dck	west boiler	W boil drn bldwn hdr						F	
PSA-TRP-16	Aux stm from drum and SSH stm t	M2008	14	S-boiler	south boiler	RH outlet bldwn hdr						F	
SGA-TRP-02	Main stm to Aux stm hdr drain trap	M2063A	16	Wboiler	west boiler	Mn Stm drip pkt drn						F	
SGF-BV-40	Reheater outlet header drain	M2068	4	fdr dck	west boiler	RH outlet hdr bldwn						F	
SGF-BV-38	Reheater outlet header drain	M2068	4	fdr dck	west boiler	RH outlet hdr bldwn						F	
SGF-MBV-36	Lower convect pass hdr drain	M2068	4	fdr dck	west boiler	W boil drn bldwn hdr						F	
SGF-BV-34	Reheater inlet header drain	M2068	4	fdr dck	west boiler	W boil drn bldwn hdr						F	
SGF-BV-31	Economizer inlet header drain	M2068	4	fdr dck	west boiler	W boil drn bldwn hdr						F	
SGA-BV-19	Drum level gage drain	M2063B	18	W-Drum	west boiler	W boil drn bldwn hdr						F	
SGA-BV-26	Drum level gage drain	M2063B	18	W-Drum	west boiler	W boil drn bldwn hdr						F	
SGF-MBV-29	Lower convect pass hdr drain	M2068	4	fdr dck	west boiler	W boil drn bldwn hdr						F	
SGF-MBV-42	Sec SH outlet header drain	M2068	4	fdr dck	west boiler	Blowdown Tank 1						F	
SGA-BV-32	Drum steam pressure gage drain	M2063B	18	W-Drum	west boiler	W boil drn bldwn hdr						F	

LOCATION: EAST SIDE BOILER DRAINS

VALVE NUMBER	DESCRIPTION	P&ID	LOCATION Floor	Near	Area	Termintaion Point	CLASS	VALVE POSITION Normal	Test	CHECKOFF Initials		Downstream Temp (F)	NOTES:
SGA-TRP-03	Drum to Aux stm drain stm trp	M2063B	18	S-boiler	east boiler	E boil drn bldwn hdr						F	
SGF-BV-54	Economizer discharge header drn	M2068	4	sub-fdr	east boiler	E boil drn bldwn hdr						F	
SGF-MBV-56	Lower convect pass hdr drain	M2068	4	sub-fdr	east boiler	E boil drn bldwn hdr						F	
SGF-MBV-58	Lower convect pass hdr drain	M2068	4	sub-fdr	east boiler	E boil drn bldwn hdr						F	
SGA-MBV-4	Drum continuous blowdown	M2068	18	E-drum	east boiler	E boil drn bldwn hdr						F	
PSA-TRP-01	Cold Reheat Aux Steam Supply	M2008	8	SE-boil	east elev	E boil drn bldwn hdr						F	

LOCATION: MAIN STEAM DRIP POCKET

VALVE NUMBER	DESCRIPTION	P&ID	LOCATION Floor	Near	Area	Termintaion Point	CLASS	VALVE POSITION Normal	Test	CHECKOFF Initials		Downstream Temp (F)	NOTES:
SGG-MBV-11	Main Steam to Blowdown Tank	M2069	2	SE-boil	NE-SV&CV	Blowdown Tank						F	
SGG-MBV-12	Main Steam to Blowdown Tank	M2069	2	SE-boil	NE-SV&CV	Blowdown Tank						F	
SGG-MBV-13	Main Steam to Blowdown Tank	M2069	2	SE-boil	NE-SV&CV	Blowdown Tank						F	
SGG-MBV-14	Main Steam to Blowdown Tank	M2069	2	SE-boil	NE-SV&CV	Blowdown Tank						F	

LOCATION: DOWNCOMER DRAINS

VALVE NUMBER	DESCRIPTION	P&ID	LOCATION Floor	Near	Area	Termintaion Point	CLASS	VALVE POSITION Normal	Test	CHECKOFF Initials		Downstream Temp (F)	NOTES:
SGF-BV-59	Drum West End Downcomer	M2068	2	S-boiler	N of Htr 2	DwncmDrnBldnHdr						F	
SGF-BV-60	Drum West End Downcomer	M2068	2	S-boiler	N of Htr 2	DwncmDrnBldnHdr						F	
SGF-BV-61	Drum West Shell Downcomer	M2068	2	S-boiler	N of Htr 2	DwncmDrnBldnHdr						F	

IP7016702

SGF-BV-62	Drum West Shell Downcomer	M2068	2	S-boiler	N of Htr 2	DwncmDrnBldnHdr						F	
SGF-MBV-66	Downcomer Drain Manifold Drain	M2068	2	S-boiler	N of Htr 2	DwncmDrnBldnHdr						F	
SGF-BV-63	Drum Center Shell Downcomer	M2068	2	S-boiler	N of Htr 2	DwncmDrnBldnHdr						F	
SGF-BV-64	Drum Center Shell Downcomer	M2068	2	S-boiler	N of Htr 2	DwncmDrnBldnHdr						F	
SGF-BV-67	Drum East Shell Downcomer	M2068	2	S-boiler	N of Htr 2	DwncmDrnBldnHdr						F	
SGF-BV-68	Drum East Shell Downcomer	M2068	2	S-boiler	N of Htr 2	DwncmDrnBldnHdr						F	
SGF-BV-69	Drum East End Downcomer	M2068	2	S-boiler	N of Htr 2	DwncmDrnBldnHdr						F	
SGF-BV-70	Drum East End Downcomer	M2068	2	S-boiler	N of Htr 2	DwncmDrnBldnHdr						F	

LOCATION: SUPERHEAT BYPASS

			LOCATION					VALVE POSITION		CHECKOFF		Downstream	
VALVE NUMBER	DESCRIPTION	P&ID	Floor	Near	Area	Termintaion Point	CLASS	Normal	Test	Initials		Temp (F)	NOTES:
SGA-TRP-1	Superheat Bypass Drain Trap	M2063A	12	NW-boil	NW corner	Partial Byp Drn Cnd						F	
SGA-ACV-137	Superheat Bypass	M2063A	2	W-Cond	NW corner	C Condenser-West						F	

LOCATION: MISCELLANEOUS VALVES

			LOCATION					VALVE POSITION		CHECKOFF		Downstream	
VALVE NUMBER	DESCRIPTION	P&ID	Floor	Near	Area	Termintaion Point	CLASS	Normal	Test	Initials		Temp (F)	NOTES:
FWA-BV-299	Bootstrap Valve	M2035A	2	SW-boil	SW Htr 2							F	
FWC-ACV-28	DEA Recirc	M2037	2	W-Cond	NW corner	C Condenser-West						F	
TEC-ACV-152	1B BFPT Extraction Drain	M2075	2	W-Cond	NW corner	Cond-Basement						F	

LOCATION: VACUUM PUMPS

			LOCATION					VALVE POSITION		CHECKOFF		Downstream	
VALVE NUMBER	DESCRIPTION	P&ID	Floor	Near	Area	Termintaion Point	CLASS	Normal	Test	Initials		Temp (F)	NOTES:
HRB-P-1A	1A Vacuum Pump	M2021	2	SE-Boil	East Elevtr							F	
HRB-P-1B	1B Vacuum Pump	M2021	2	SE-Boil	East Elevtr							F	
HRB-P-1C	1C Vacuum Pump	M2021	2	SE-Boil	East Elevtr							F	
HRB-P-1D	1D Vacuum Pump	M2021	2	SE-Boil	East Elevtr							F	

LOCATION:

			LOCATION					VALVE POSITION		CHECKOFF		Downstream	
VALVE NUMBER	DESCRIPTION	P&ID	Floor	Near	Area	Termintaion Point	CLASS	Normal	Test	Initials		Temp (F)	NOTES:
TGA-ABV-2	Ventilator Valve	M2079	2	CV's	E A Cond	Atm - roof vents						F	
FWA-PS-70	BFP 1A Inlet Strainer DP	M2035A	2	N-Cond	BFPT Exh							F	
FWA-PS-71	BFP 1B Inlet Strainer DP	M2035A	2	N-Cond	BFPT Exh							F	
SGI-ABV-21	AH Soot Blower Drain	M2070	3	NE-Boil	Stairs	Cond						F	
SGI-ABV-22	AH Soot Blower Drain	M2070	3	NW-Boil	Stairs	Cond						F	
SGI-ABV-170	Boiler Soot Blower Drain	M2070	7	W-Boil		Cond						F	
SGI-ABV-171	Boiler Soot Blower Drain	M2070	7	E-Boil		Cond						F	
SGI-ABV-172	Boiler Soot Blower Drain	M2070	11	E-Boil	Backpass	Cond						F	
SGI-ABV-173	Boiler Soot Blower Drain	M2070	11	W-Boil	Backpass	Cond						F	
SGA-MBV-173	Economizer Recirc	M2063A	10.5	W-Boil	Backpass	Economizer inlet						F	
SGA-MBV-174	Economizer Recirc	M2063A	10.5	E-Boil	Backpass	Economizer inlet						F	

IP70167 03

SGG-MCV-18	Main Steam Warming Line	M2069	2	E-CV'S		Cond						F	
SGG-MBV-25	Main Steam Line Drain	M2069	2	E-CV'S		Cond						F	
SGG-MBV-26	Main Steam Line Drain	M2069	2	E-CV'S		Cond						F	
SGG-MBV-55	Main Steam to BFPT Drain	M2069	2	E-CV'S		Cond						F	
SGG-MBV-56	Main Steam to BFPT Drain	M2069	2	E-CV'S		Cond						F	
PSA-ACV-60	Drum Aux Steam Supply	M2008	17	S-Boil		Aux						F	
PSA-ACV-57	SSH Aux Steam Supply	M2008	17	W-Boil		Aux						F	

IP7016704

Day 5-Test 9 m/y

IP7016705

TURBINE CYCLE PERFORMANCE TESTING					IGS Unit # 2		Test # ____				
*** CYCLE ISOLATION CHECKOFF SHEETS ***					Date: _____		Time: _____		Name: _____		

VALVE CLASSIFICATION:

Class I*- CRITICAL VALVES- valves which are required to be opened immediately due to operational upset or unit trip

Class I- Open valves just prior to test and standby, valves need to be opened at the end of each test

Class II- Close valves up to 2 hours prior to each test (before Class I valves), re-open valves after Class I valves

Class III- Close valves at the beginning of the day and open at the end of the day

Class IV- Non-Critical Valves- verify normally closed valves are closed (and not leaking) and normally opened valves are open

LOCATION: CONDENSER CONNECTIONS- EAST BASEMENT

			LOCATION					VALVE POSITION		CHECKOFF		Downstream	
VALVE NUMBER	DESCRIPTION	P&ID	Floor	Near	Area	Termintaion Point	CLASS	Normal	Test	Initials		Temp (F)	NOTES:
TGC-BV-65	Drain from TDV to Htr	M2080A	2	ss-plat	Diag A #1	Cond TB end bsmt						____F	
TGC-BV-67	Drain from TDV to Htr	M2080A	2	ss-plat	Diag A #1	Cond TB end bsmt						____F	
FWA-MBV-189	Wrmup Drain from FW to Htr 6	M2035A			Diag A #2	Cond TB end bsmt						____F	
TGC-MBV-31	RHT bowl drain to cond	M2080B	1	s-ehc	Diag A #3	Cond TB end bsmt						____F	
TGC-MBV-37	Control Valve drain to cond.	M2080B	2	convlvs	Diag A #4	Cond TB end bsmt						____F	
TGC-MBV-39	Control Valve drain to cond.	M2080B	2	convlvs	Diag A #5	Cond TB end bsmt						____F	
TGC-MBV-40	Control Valve drain to cond.	M2080B	2	convlvs	Diag A #6	Cond TB end bsmt						____F	
TGC-MBV-33	Stop Valve drain to cond	M2080B	2	stpvlvs	Diag A #7	Cond TB end bsmt						____F	
TGC-MBV-34	Stop Valve drain to cond	M2080B	2	stpvlvs	Diag A #8	Cond TB end bsmt						____F	
TGC-MBV-36	Stop Valve drain to cond	M2080B	2	stpvlvs	Diag A #9	Cond TB end bsmt						____F	
TGC-MBV-35	Stop Valve drain to cond	M2080B	2	stpvlvs	Diag A #10	Cond TB end bsmt						____F	
TGC-MBV-32	RHT bowl drain to cond	M2080B	1	s-ehc	Diag A #11	Cond TB end bsmt						____F	
SGJ-MBV-18	CRH low point drains	M2071	1	s-ehc	Diag A #12	Cond TB end bsmt						____F	
SGJ-MBV-14	HRH low point drains	M2071	1	s-ehc	Diag A #13	Cond TB end bsmt						____F	
SGJ-MBV-16	HRH low point drains	M2071	1	s-ehc	Diag A #13	Cond TB end bsmt						____F	
SGG-MBV-25	MS Byp to cond low pt drain	M2069	2	ne-cond	Diag A #14	Cond TB end bsmt						____F	
TGC-MBV-38	Control Valve drain to cond	M2080B	2	convlvs	Diag A #15	Cond TB end bsmt						____F	
TGC-MBV-49	MS lead drain to cond	M2080	1	sw-ehc	Diag A #16	Cond TB end bsmt						____F	
TGC-ACV-4	TDV to cond	M2080A	2.5	stmslplt	Diag A #17	Cond TB end bsmt						____F	
TGA-ABV-20	Equalizer valve	M2079	2		Diag A #18	Cond TB end bsmt						____F	
TED-ACV-11	Htr 6A hi level dump	M2076	1	e-cond	Diag A #20	Cond TB end bsmt						____F	
TED-ACV-12	Htr 6B hi level dump	M2076	1	e-cond	Diag A #21	Cond TB end bsmt						____F	
TED-ACV-3	Htr 8A hi level dump	M2076	1	e-cond	Diag A #22	Cond TB end bsmt						____F	
TED-ACV-4	Htr 8B hi level dump	M2076	1	e-cond	Diag A#24	Cond TB end bsmt						____F	
TED-ACV-8	Htr 7B hi level dump	M2076	1	e-cond	Diag A#25	Cond TB end bsmt						____F	
TGC-ORF-8	SSH low point drain	M2080A	1		Diag A#26	Cond TB end bsmt						____F	
TED-ACV-7	Htr 7A hi level dump	M2076	1	e-cond	Diag A#27	Cond TB end bsmt						____F	
TEC-ACV-146	Drn frm LPextr stm to BFPT A	M2075	1	e-cond	Diag A#28	Cond TB end bsmt						____F	

LOCATION: HP DRAIN HEADER

			LOCATION					VALVE POSITION		CHECKOFF		Downstream	
VALVE NUMBER	DESCRIPTION	P&ID	Floor	Near	Area	Termintaion Point	CLASS	Normal	Test	Initials		Temp (F)	NOTES:
SGI-MBV-178	Air heater sootblowers drain	M2070	1	E-EHC	DiagB1#1	HP Drain Header						____F	
SGI-MBV-35	Boiler sootblowers drain	M2070	1	E-EHC	DiagB1#2	HP Drain Header						____F	
TEC-ACV-14	4th stg extr (drain) to HTR 8A & 8	M2075	1	E-EHC	DiagB1#3	HP Drain Header						____F	

IP7016706

TEC-ACV-80	4th stg extr (drain) to HTR 8A	M2075	1	E-EHC	DiagB1#4	HP Drain Header						F	
TEC-ACV-140	14th stg extr (drain) to BFPT 1B	M2075	1	E-EHC	DiagB1#5	HP Drain Header						F	
TEC-ACV-128	14th stg extr (drain) to DA	M2075	1	E-EHC	DiagB1#6	HP Drain Header						F	
TEC-ACV-116	14th stg extr (drain) to DA	M2075	1	E-EHC	DiagB1#7	HP Drain Header						F	
TEC-ACV-86	4th stg extr (drain) to HTR 8B	M2075	1	E-EHC	DiagB1#8	HP Drain Header						F	
TEC-ACV-92	11th stg extr (drain) to HTR 6A&B	M2075	1	E-EHC	DiagB1#9	HP Drain Header						F	
TEC-ACV-98	11th stg extr (drain) to HTR 6A	M2075	1	E-EHC	DiagB1#10	HP Drain Header						F	
TEC-ACV-101	11th stg extr (drain) to HTR 6B	M2075	1	E-EHC	DiagB1#11	HP Drain Header						F	
TEC-ACV-134	14th stg extr (drain) to BFPT 1A	M2075	1	E-EHC	DiagB1#12	HP Drain Header						F	
TEC-ACV-122	14th stg extr (drain) to BFPT 1A&	M2075	1	E-EHC	DiagB1#13	HP Drain Header						F	
TEC-ACV-110	14th stg extr (drain) to DA	M2075	1	E-EHC	DiagB1#14	HP Drain Header						F	
PSA-ORF-1	Aux Stm Hdr orificed drain line	M2008	1	S-EHC	DiagB1#15	HP Drain Header						F	
LOCATION: LP DRAIN HEADER													
			LOCATION					VALVE POSITION		CHECKOFF		Downstream	
VALVE NUMBER	DESCRIPTION	P&ID	Floor	Near	Area	Termintaion Point	CLASS	Normal	Test	Initials		Temp (F)	NOTES:
TEC-ACV-2	HTR 2 extr from A hood (drain)	M2075	1	ne-cond	DiagB2#1	LP Drain Header						F	
TEC-ACV-6	HTR 2 extr from A hood (drain)	M2075	1	ne-cond	DiagB2#2	LP Drain Header						F	
TEC-ACV-10	HTR 3 extr from A hood (drain)	M2075	1	ne-cond	DiagB2#3	LP Drain Header						F	
TEC-ACV-14	HTR 3 extr from A hood (drain)	M2075	1	ne-cond	DiagB2#4	LP Drain Header						F	
TEC-ACV-18	HTR 4 extr from A hood (drain)	M2075	1	ne-cond	DiagB2#5	LP Drain Header						F	
TEC-ACV-22	HTR 4 extr from A hood (drain)	M2075	1	ne-cond	DiagB2#6	LP Drain Header						F	
TEC-ACV-50	Extr to HTR 2 from C hood drain	M2075	1	nw-cond	DiagB3#1	LP Drain Header						F	

IP7016707

TEC-ACV-54	Extr to HTR 2 from C hood drain	M2075	1	nw-cond	DiagB3#2	LP Drain Header						F	
TEC-ACV-58	Extr to HTR3 from C hood drain	M2075	1	nw-cond	DiagB3#3	LP Drain Header						F	
TEC-ACV-62	Extr to HTR3 from C hood drain	M2075	1	nw-cond	DiagB3#4	LP Drain Header						F	
TEC-ACV-66	Extr to HTR 4 from C hood drain	M2075	1	nw-cond	DiagB3#5	LP Drain Header						F	
TEC-ACV-70	Extr to HTR 4 from C hood drain	M2075	1	nw-cond	DiagB3#6	LP Drain Header						F	
TEC-ACV-26	Extr to HTR 2 from B hood drain	M2075	1	nw-cond	DiagB3#7	LP Drain Header						F	
TEC-ACV-30	Extr to HTR 2 from B hood drain	M2075	1	nw-cond	DiagB3#8	LP Drain Header						F	
TEC-ACV-34	Extr to HTR 3 from B hood drain	M2075	1	nw-cond	DiagB3#9	LP Drain Header						F	
TEC-ACV-38	Extr to HTR 3 from B hood drain	M2075	1	nw-cond	DiagB3#10	LP Drain Header						F	
TEC-ACV-42	Extr to HTR 4 from B hood drain	M2075	1	nw-cond	DiagB3#11	LP Drain Header						F	
TEC-ACV-46	Extr to HTR 4 from B hood drain	M2075	1	nw-cond	DiagB3#12	LP Drain Header						F	

LOCATION: CONDENSER CONNECTIONS-NORTH MEZZANINE

			LOCATION					VALVE POSITION		CHECKOFF		Downstream	
VALVE NUMBER	DESCRIPTION	P&ID	Floor	Near	Area	Termintaion Point	CLASS	Normal	Test	Initials		Temp (F)	NOTES:
FWA-ABV-303	BFPT "A" HP Stop Vlv Drain	M2035C	2	N-cond	Diag C #6	dwncmr drns hdr						F	
FWA-ABV-309	BFPT"A"LP stp vlv below stdr	M2035C	2	N-cond	Diag C #7	Cond-A NorthMez						F	
FWA-ABV-305	BFPT"A" HP Stop Valve Drain	M2035C	2	N-cond	Diag C #8	Cond-A NorthMez						F	
FWA-ABV-311	BFPT"A" First Stage Drain	M2035C	2	ne-cnd	Diag C #9	Cond-A NorthMez						F	
TEF-BV-162	HTR 4 Vent to Condenser	M2078B	5	HTR4	Diag C #10	Cond-North Mezz						F	
TEF-BV-163	HTR 3 Vent to Condenser	M2078B	3	HTR3	Diag C #11	Cond-North Mezz						F	
TEF-BV-164	HTR 2 Vent to Condenser	M2078B	2	HTR2	Diag C #12	Cond-North Mezz						F	
FWA-ABV-312	BFPT"B" First Stage Drain	M2035C	2	nw-cnd	Diag C #13	Cond-C NorthMez						F	
FWA-ABV-306	BFPT"B" HP Stop Valve Drain	M2035C	2	N-cond	Diag C #14	Cond-C NorthMez						F	
FWA-ABV-310	BFPT"B"LP stpvlv below st dr	M2035C	2	N-cond	Diag C #15	Cond-C NorthMez						F	
FWA-ABV-304	BFPT"B" HP Stop Valve Drain	M2035C	2	N-cond	Diag C #16	dwncmr drns hdr						F	

LOCATION: CONDENSER CONNECTIONS-NORTH BASEMENT (check on mezzanine level)

			LOCATION					VALVE POSITION		CHECKOFF		Downstream	
VALVE NUMBER	DESCRIPTION	P&ID	Floor	Near	Area	Termintaion Point	CLASS	Normal	Test	Initials		Temp (F)	NOTES:
TGC-ORF-11	Steam Seal Hdr Low Point Drain	M2080A	2	N-cond	A-cond	Cond-A North Basemt						F	
FWA-ABV-307	BFPT 1A Stpvlv above seat drn	M2035C	2	N-cond	A-cond	Cond-A North Basemt						F	
FWA-ABV-308	BFPT 1B Stpvlv above seat drn	M2035C	2	N-cond	C-cond	Cond-C North Basemt						F	

IP70167 08

LOCATION: WEST SIDE BOILER DRAINS

VALVE NUMBER	DESCRIPTION	P&ID	LOCATION Floor	Near	Area	Termintaion Point	CLASS	VALVE POSITION Normal	Test	CHECKOFF Initials		Downstream Temp (F)	NOTES:
SGF-MBV-52	Roof Inlet header drain	M2068	4	fdr dck	west boiler	W boil drn bldwn hdr						F	
SGF-MBV-50	Sec SH Platen inlet drain header	M2068	4	fdr dck	west boiler	W boil drn bldwn hdr						F	
SGF-BV-48	Economizer discharge header drn	M2068	4	fdr dck	west boiler	W boil drn bldwn hdr						F	
SGF-MBV-46	Sec SH Intermediate inlet hdr drain	M2068	4	fdr dck	west boiler	W boil drn bldwn hdr						F	
SGF-MBV-44	Sec SH Intermediate inlet hdr drain	M2068	4	fdr dck	west boiler	W boil drn bldwn hdr						F	
PSA-TRP-16	Aux stm from drum and SSH stm t	M2008	14	S-boiler	south boiler	RH outlet bldwn hdr						F	
SGA-TRP-02	Main stm to Aux stm hdr drain trap	M2063A	16	Wboiler	west boiler	Mn Stm drip pkt drn						F	
SGF-BV-40	Reheater outlet header drain	M2068	4	fdr dck	west boiler	RH outlet hdr bldwn						F	
SGF-BV-38	Reheater outlet header drain	M2068	4	fdr dck	west boiler	RH outlet hdr bldwn						F	
SGF-MBV-36	Lower convect pass hdr drain	M2068	4	fdr dck	west boiler	W boil drn bldwn hdr						F	
SGF-BV-34	Reheater inlet header drain	M2068	4	fdr dck	west boiler	W boil drn bldwn hdr						F	
SGF-BV-31	Economizer inlet header drain	M2068	4	fdr dck	west boiler	W boil drn bldwn hdr						F	
SGA-BV-19	Drum level gage drain	M2063B	18	W-Drum	west boiler	W boil drn bldwn hdr						F	
SGA-BV-26	Drum level gage drain	M2063B	18	W-Drum	west boiler	W boil drn bldwn hdr						F	
SGF-MBV-29	Lower convect pass hdr drain	M2068	4	fdr dck	west boiler	W boil drn bldwn hdr						F	
SGF-MBV-42	Sec SH outlet header drain	M2068	4	fdr dck	west boiler	Blowdown Tank 1						F	
SGA-BV-32	Drum steam pressure gage drain	M2063B	18	W-Drum	west boiler	W boil drn bldwn hdr						F	

LOCATION: EAST SIDE BOILER DRAINS

VALVE NUMBER	DESCRIPTION	P&ID	LOCATION Floor	Near	Area	Termintaion Point	CLASS	VALVE POSITION Normal	Test	CHECKOFF Initials		Downstream Temp (F)	NOTES:
SGA-TRP-03	Drum to Aux stm drain stm trp	M2063B	18	S-boiler	east boiler	E boil drn bldwn hdr						F	
SGF-BV-54	Economizer discharge header drn	M2068	4	sub-fdr	east boiler	E boil drn bldwn hdr						F	
SGF-MBV-56	Lower convect pass hdr drain	M2068	4	sub-fdr	east boiler	E boil drn bldwn hdr						F	
SGF-MBV-58	Lower convect pass hdr drain	M2068	4	sub-fdr	east boiler	E boil drn bldwn hdr						F	
SGA-MBV-4	Drum continuous blowdown	M2068	18	E-drum	east boiler	E boil drn bldwn hdr						F	
PSA-TRP-01	Cold Reheat Aux Steam Supply	M2008	8	SE-boil	east elev	E boil drn bldwn hdr						F	

LOCATION: MAIN STEAM DRIP POCKET

VALVE NUMBER	DESCRIPTION	P&ID	LOCATION Floor	Near	Area	Termintaion Point	CLASS	VALVE POSITION Normal	Test	CHECKOFF Initials		Downstream Temp (F)	NOTES:
SGG-MBV-11	Main Steam to Blowdown Tank	M2069	2	SE-boil	NE-SV&CV	Blowdown Tank						F	
SGG-MBV-12	Main Steam to Blowdown Tank	M2069	2	SE-boil	NE-SV&CV	Blowdown Tank						F	
SGG-MBV-13	Main Steam to Blowdown Tank	M2069	2	SE-boil	NE-SV&CV	Blowdown Tank						F	
SGG-MBV-14	Main Steam to Blowdown Tank	M2069	2	SE-boil	NE-SV&CV	Blowdown Tank						F	

LOCATION: DOWNCOMER DRAINS

VALVE NUMBER	DESCRIPTION	P&ID	LOCATION Floor	Near	Area	Termintaion Point	CLASS	VALVE POSITION Normal	Test	CHECKOFF Initials		Downstream Temp (F)	NOTES:
SGF-BV-59	Drum West End Downcomer	M2068	2	S-boiler	N of Htr 2	DwncmDrnBldnHdr						F	
SGF-BV-60	Drum West End Downcomer	M2068	2	S-boiler	N of Htr 2	DwncmDrnBldnHdr						F	
SGF-BV-61	Drum West Shell Downcomer	M2068	2	S-boiler	N of Htr 2	DwncmDrnBldnHdr						F	

IP7016709

SGF-BV-62	Drum West Shell Downcomer	M2068	2	S-boiler	N of Htr 2	DwncmDrnBldnHdr						F	
SGF-MBV-66	Downcomer Drain Manifold Drain	M2068	2	S-boiler	N of Htr 2	DwncmDrnBldnHdr						F	
SGF-BV-63	Drum Center Shell Downcomer	M2068	2	S-boiler	N of Htr 2	DwncmDrnBldnHdr						F	
SGF-BV-64	Drum Center Shell Downcomer	M2068	2	S-boiler	N of Htr 2	DwncmDrnBldnHdr						F	
SGF-BV-67	Drum East Shell Downcomer	M2068	2	S-boiler	N of Htr 2	DwncmDrnBldnHdr						F	
SGF-BV-68	Drum East Shell Downcomer	M2068	2	S-boiler	N of Htr 2	DwncmDrnBldnHdr						F	
SGF-BV-69	Drum East End Downcomer	M2068	2	S-boiler	N of Htr 2	DwncmDrnBldnHdr						F	
SGF-BV-70	Drum East End Downcomer	M2068	2	S-boiler	N of Htr 2	DwncmDrnBldnHdr						F	

LOCATION: SUPERHEAT BYPASS

			LOCATION					VALVE POSITION		CHECKOFF		Downstream	
VALVE NUMBER	DESCRIPTION	P&ID	Floor	Near	Area	Termintaion Point	CLASS	Normal	Test	Initials		Temp (F)	NOTES:
SGA-TRP-1	Superheat Bypass Drain Trap	M2063A	12	NW-boil	NW corner	Partial Byp Drn Cnd						F	
SGA-ACV-137	Superheat Bypass	M2063A	2	W-Cond	NW corner	C Condenser-West						F	

LOCATION: MISCELLANEOUS VALVES

			LOCATION					VALVE POSITION		CHECKOFF		Downstream	
VALVE NUMBER	DESCRIPTION	P&ID	Floor	Near	Area	Termintaion Point	CLASS	Normal	Test	Initials		Temp (F)	NOTES:
FWA-BV-299	Bootstrap Valve	M2035A	2	SW-boil	SW Htr 2							F	
FWC-ACV-28	DEA Recirc	M2037	2	W-Cond	NW corner	C Condenser-West						F	
TEC-ACV-152	1B BFPT Extraction Drain	M2075	2	W-Cond	NW corner	Cond-Basement						F	

LOCATION: VACUUM PUMPS

			LOCATION					VALVE POSITION		CHECKOFF		Downstream	
VALVE NUMBER	DESCRIPTION	P&ID	Floor	Near	Area	Termintaion Point	CLASS	Normal	Test	Initials		Temp (F)	NOTES:
HRB-P-1A	1A Vacuum Pump	M2021	2	SE-Boil	East Elevtr							F	
HRB-P-1B	1B Vacuum Pump	M2021	2	SE-Boil	East Elevtr							F	
HRB-P-1C	1C Vacuum Pump	M2021	2	SE-Boil	East Elevtr							F	
HRB-P-1D	1D Vacuum Pump	M2021	2	SE-Boil	East Elevtr							F	

LOCATION:

			LOCATION					VALVE POSITION		CHECKOFF		Downstream	
VALVE NUMBER	DESCRIPTION	P&ID	Floor	Near	Area	Termintaion Point	CLASS	Normal	Test	Initials		Temp (F)	NOTES:
TGA-ABV-2	Ventilator Valve	M2079	2	CV's	E A Cond	Atm - roof vents						F	
FWA-PS-70	BFP 1A Inlet Strainer DP	M2035A	2	N-Cond	BFPT Exh							F	
FWA-PS-71	BFP 1B Inlet Strainer DP	M2035A	2	N-Cond	BFPT Exh							F	
SGI-ABV-21	AH Soot Blower Drain	M2070	3	NE-Boil	Stairs	Cond						F	
SGI-ABV-22	AH Soot Blower Drain	M2070	3	NW-Boil	Stairs	Cond						F	
SGI-ABV-170	Boiler Soot Blower Drain	M2070	7	W-Boil		Cond						F	
SGI-ABV-171	Boiler Soot Blower Drain	M2070	7	E-Boil		Cond						F	
SGI-ABV-172	Boiler Soot Blower Drain	M2070	11	E-Boil	Backpass	Cond						F	
SGI-ABV-173	Boiler Soot Blower Drain	M2070	11	W-Boil	Backpass	Cond						F	
SGA-MBV-173	Economizer Recirc	M2063A	10.5	W-Boil	Backpass	Economizer inlet						F	
SGA-MBV-174	Economizer Recirc	M2063A	10.5	E-Boil	Backpass	Economizer inlet						F	

IP7016710

SGG-MCV-18	Main Steam Warming Line	M2069	2	E-CV'S		Cond						F	
SGG-MBV-25	Main Steam Line Drain	M2069	2	E-CV'S		Cond						F	
SGG-MBV-26	Main Steam Line Drain	M2069	2	E-CV'S		Cond						F	
SGG-MBV-55	Main Steam to BFPT Drain	M2069	2	E-CV'S		Cond						F	
SGG-MBV-56	Main Steam to BFPT Drain	M2069	2	E-CV'S		Cond						F	
PSA-ACV-60	Drum Aux Steam Supply	M2008	17	S-Boil		Aux						F	
PSA-ACV-57	SSH Aux Steam Supply	M2008	17	W-Boil		Aux						F	

IP7016711

Day 5 - Test 10 m/u

IP7016712

TURBINE CYCLE PERFORMANCE TESTING | IGS Unit # 2 | Test # _____

***** CYCLE ISOLATION CHECKOFF SHEETS ***** | Date: _____ | Time: _____ | Name: _____

VALVE CLASSIFICATION:

Class I*- CRITICAL VALVES- valves which are required to be opened immediately due to operational upset or unit trip

Class I- Open valves just prior to test and standby, valves need to be opened at the end of each test

Class II- Close valves up to 2 hours prior to each test (before Class I valves), re-open valves after Class I valves

Class III- Close valves at the beginning of the day and open at the end of the day

Class IV- Non-Critical Valves- verify normally closed valves are closed (and not leaking) and normally opened valves are open

LOCATION: CONDENSER CONNECTIONS- EAST BASEMENT

			LOCATION					VALVE POSITION		CHECKOFF		Downstream	
VALVE NUMBER	DESCRIPTION	P&ID	Floor	Near	Area	Termintaion Point	CLASS	Normal	Test	Initials		Temp (F)	NOTES:
TGC-BV-65	Drain from TDV to Htr	M2080A	2	ss-plat	Diag A #1	Cond TB end bsmt						____F	
TGC-BV-67	Drain from TDV to Htr	M2080A	2	ss-plat	Diag A #1	Cond TB end bsmt						____F	
FWA-MBV-189	Wrmup Drain from FW to Htr 6	M2035A			Diag A #2	Cond TB end bsmt						____F	
TGC-MBV-31	RHT bowl drain to cond	M2080B	1	s-ehc	Diag A #3	Cond TB end bsmt						____F	
TGC-MBV-37	Control Valve drain to cond.	M2080B	2	convlvs	Diag A #4	Cond TB end bsmt						____F	
TGC-MBV-39	Control Valve drain to cond.	M2080B	2	convlvs	Diag A #5	Cond TB end bsmt						____F	
TGC-MBV-40	Control Valve drain to cond.	M2080B	2	convlvs	Diag A #6	Cond TB end bsmt						____F	
TGC-MBV-33	Stop Valve drain to cond	M2080B	2	stpvlvs	Diag A #7	Cond TB end bsmt						____F	
TGC-MBV-34	Stop Valve drain to cond	M2080B	2	stpvlvs	Diag A #8	Cond TB end bsmt						____F	
TGC-MBV-36	Stop Valve drain to cond	M2080B	2	stpvlvs	Diag A #9	Cond TB end bsmt						____F	
TGC-MBV-35	Stop Valve drain to cond	M2080B	2	stpvlvs	Diag A #10	Cond TB end bsmt						____F	
TGC-MBV-32	RHT bowl drain to cond	M2080B	1	s-ehc	Diag A #11	Cond TB end bsmt						____F	
SGJ-MBV-18	CRH low point drains	M2071	1	s-ehc	Diag A #12	Cond TB end bsmt						____F	
SGJ-MBV-14	HRH low point drains	M2071	1	s-ehc	Diag A #13	Cond TB end bsmt						____F	
SGJ-MBV-16	HRH low point drains	M2071	1	s-ehc	Diag A #13	Cond TB end bsmt						____F	
SGG-MBV-25	MS Byp to cond low pt drain	M2069	2	ne-cond	Diag A #14	Cond TB end bsmt						____F	
TGC-MBV-38	Control Valve drain to cond	M2080B	2	convlvs	Diag A #15	Cond TB end bsmt						____F	
TGC-MBV-49	MS lead drain to cond	M2080	1	sw-ehc	Diag A #16	Cond TB end bsmt						____F	
TGC-ACV-4	TDV to cond	M2080A	2.5	stmslplt	Diag A #17	Cond TB end bsmt						____F	
TGA-ABV-20	Equalizer valve	M2079	2		Diag A #18	Cond TB end bsmt						____F	
TED-ACV-11	Htr 6A hi level dump	M2076	1	e-cond	Diag A #20	Cond TB end bsmt						____F	
TED-ACV-12	Htr 6B hi level dump	M2076	1	e-cond	Diag A #21	Cond TB end bsmt						____F	
TED-ACV-3	Htr 8A hi level dump	M2076	1	e-cond	Diag A #22	Cond TB end bsmt						____F	
TED-ACV-4	Htr 8B hi level dump	M2076	1	e-cond	Diag A#24	Cond TB end bsmt						____F	
TED-ACV-8	Htr 7B hi level dump	M2076	1	e-cond	Diag A#25	Cond TB end bsmt						____F	
TGC-ORF-8	SSH low point drain	M2080A	1		Diag A#26	Cond TB end bsmt						____F	
TED-ACV-7	Htr 7A hi level dump	M2076	1	e-cond	Diag A#27	Cond TB end bsmt						____F	
TEC-ACV-146	Drn frm LPextr stm to BFPT A	M2075	1	e-cond	Diag A#28	Cond TB end bsmt						____F	

LOCATION: HP DRAIN HEADER

			LOCATION					VALVE POSITION		CHECKOFF		Downstream	
VALVE NUMBER	DESCRIPTION	P&ID	Floor	Near	Area	Termintaion Point	CLASS	Normal	Test	Initials		Temp (F)	NOTES:
SGI-MBV-178	Air heater sootblowers drain	M2070	1	E-EHC	DiagB1#1	HP Drain Header						____F	
SGI-MBV-35	Boiler sootblowers drain	M2070	1	E-EHC	DiagB1#2	HP Drain Header						____F	
TEC-ACV-14	4th stg extr (drain) to HTR 8A & 8	M2075	1	E-EHC	DiagB1#3	HP Drain Header						____F	

IP7016713

TEC-ACV-80	4th stg extr (drain) to HTR 8A	M2075	1	E-EHC	DiagB1#4	HP Drain Header						F	
TEC-ACV-140	14th stg extr (drain) to BFPT 1B	M2075	1	E-EHC	DiagB1#5	HP Drain Header						F	
TEC-ACV-128	14th stg extr (drain) to DA	M2075	1	E-EHC	DiagB1#6	HP Drain Header						F	
TEC-ACV-116	14th stg extr (drain) to DA	M2075	1	E-EHC	DiagB1#7	HP Drain Header						F	
TEC-ACV-86	4th stg extr (drain) to HTR 8B	M2075	1	E-EHC	DiagB1#8	HP Drain Header						F	
TEC-ACV-92	11th stg extr (drain) to HTR 6A&B	M2075	1	E-EHC	DiagB1#9	HP Drain Header						F	
TEC-ACV-98	11th stg extr (drain) to HTR 6A	M2075	1	E-EHC	DiagB1#10	HP Drain Header						F	
TEC-ACV-101	11th stg extr (drain) to HTR 6B	M2075	1	E-EHC	DiagB1#11	HP Drain Header						F	
TEC-ACV-134	14th stg extr (drain) to BFPT 1A	M2075	1	E-EHC	DiagB1#12	HP Drain Header						F	
TEC-ACV-122	14th stg extr (drain) to BFPT 1A&	M2075	1	E-EHC	DiagB1#13	HP Drain Header						F	
TEC-ACV-110	14th stg extr (drain) to DA	M2075	1	E-EHC	DiagB1#14	HP Drain Header						F	
PSA-ORF-1	Aux Stm Hdr orificed drain line	M2008	1	S-EHC	DiagB1#15	HP Drain Header						F	
LOCATION: LP DRAIN HEADER													
			LOCATION					VALVE POSITION		CHECKOFF		Downstream	
VALVE NUMBER	DESCRIPTION	P&ID	Floor	Near	Area	Termintaion Point	CLASS	Normal	Test	Initials		Temp (F)	NOTES:
TEC-ACV-2	HTR 2 extr from A hood (drain)	M2075	1	ne-cond	DiagB2#1	LP Drain Header						F	
TEC-ACV-6	HTR 2 extr from A hood (drain)	M2075	1	ne-cond	DiagB2#2	LP Drain Header						F	
TEC-ACV-10	HTR 3 extr from A hood (drain)	M2075	1	ne-cond	DiagB2#3	LP Drain Header						F	
TEC-ACV-14	HTR 3 extr from A hood (drain)	M2075	1	ne-cond	DiagB2#4	LP Drain Header						F	
TEC-ACV-18	HTR 4 extr from A hood (drain)	M2075	1	ne-cond	DiagB2#5	LP Drain Header						F	
TEC-ACV-22	HTR 4 extr from A hood (drain)	M2075	1	ne-cond	DiagB2#6	LP Drain Header						F	
TEC-ACV-50	Extr to HTR 2 from C hood drain	M2075	1	nw-cond	DiagB3#1	LP Drain Header						F	

IP7016714

TEC-ACV-54	Extr to HTR 2 from C hood drain	M2075	1	nw-cond	DiagB3#2	LP Drain Header						F	
TEC-ACV-58	Extr to HTR3 from C hood drain	M2075	1	nw-cond	DiagB3#3	LP Drain Header						F	
TEC-ACV-62	Extr to HTR3 from C hood drain	M2075	1	nw-cond	DiagB3#4	LP Drain Header						F	
TEC-ACV-66	Extr to HTR 4 from C hood drain	M2075	1	nw-cond	DiagB3#5	LP Drain Header						F	
TEC-ACV-70	Extr to HTR 4 from C hood drain	M2075	1	nw-cond	DiagB3#6	LP Drain Header						F	
TEC-ACV-26	Extr to HTR 2 from B hood drain	M2075	1	nw-cond	DiagB3#7	LP Drain Header						F	
TEC-ACV-30	Extr to HTR 2 from B hood drain	M2075	1	nw-cond	DiagB3#8	LP Drain Header						F	
TEC-ACV-34	Extr to HTR 3 from B hood drain	M2075	1	nw-cond	DiagB3#9	LP Drain Header						F	
TEC-ACV-38	Extr to HTR 3 from B hood drain	M2075	1	nw-cond	DiagB3#10	LP Drain Header						F	
TEC-ACV-42	Extr to HTR 4 from B hood drain	M2075	1	nw-cond	DiagB3#11	LP Drain Header						F	
TEC-ACV-46	Extr to HTR 4 from B hood drain	M2075	1	nw-cond	DiagB3#12	LP Drain Header						F	

LOCATION: CONDENSER CONNECTIONS-NORTH MEZZANINE

			LOCATION					VALVE POSITION		CHECKOFF		Downstream	
VALVE NUMBER	DESCRIPTION	P&ID	Floor	Near	Area	Termintaion Point	CLASS	Normal	Test	Initials		Temp (F)	NOTES:
FWA-ABV-303	BFPT "A" HP Stop Vlv Drain	M2035C	2	N-cond	Diag C #6	dwncmr drns hdr						F	
FWA-ABV-309	BFPT"A"LP stp vlv below stdr	M2035C	2	N-cond	Diag C #7	Cond-A NorthMez						F	
FWA-ABV-305	BFPT"A" HP Stop Valve Drain	M2035C	2	N-cond	Diag C #8	Cond-A NorthMez						F	
FWA-ABV-311	BFPT"A" First Stage Drain	M2035C	2	ne-cnd	Diag C #9	Cond-A NorthMez						F	
TEF-BV-162	HTR 4 Vent to Condenser	M2078B	5	HTR4	Diag C #10	Cond-North Mezz						F	
TEF-BV-163	HTR 3 Vent to Condenser	M2078B	3	HTR3	Diag C #11	Cond-North Mezz						F	
TEF-BV-164	HTR 2 Vent to Condenser	M2078B	2	HTR2	Diag C #12	Cond-North Mezz						F	
FWA-ABV-312	BFPT"B" First Stage Drain	M2035C	2	nw-cnd	Diag C #13	Cond-C NorthMez						F	
FWA-ABV-306	BFPT"B" HP Stop Valve Drain	M2035C	2	N-cond	Diag C #14	Cond-C NorthMez						F	
FWA-ABV-310	BFPT"B"LP stpvlv below st dr	M2035C	2	N-cond	Diag C #15	Cond-C NorthMez						F	
FWA-ABV-304	BFPT"B" HP Stop Valve Drain	M2035C	2	N-cond	Diag C #16	dwncmr drns hdr						F	

LOCATION: CONDENSER CONNECTIONS-NORTH BASEMENT (check on mezzanine level)

			LOCATION					VALVE POSITION		CHECKOFF		Downstream	
VALVE NUMBER	DESCRIPTION	P&ID	Floor	Near	Area	Termintaion Point	CLASS	Normal	Test	Initials		Temp (F)	NOTES:
TGC-ORF-11	Steam Seal Hdr Low Point Drain	M2080A	2	N-cond	A-cond	Cond-A North Basemt						F	
FWA-ABV-307	BFPT 1A Stpvlv above seat drn	M2035C	2	N-cond	A-cond	Cond-A North Basemt						F	
FWA-ABV-308	BFPT 1B Stpvlv above seat drn	M2035C	2	N-cond	C-cond	Cond-C North Basemt						F	

IP7016715

LOCATION: WEST SIDE BOILER DRAINS

VALVE NUMBER	DESCRIPTION	P&ID	LOCATION Floor	Near	Area	Termintaion Point	CLASS	VALVE POSITION Normal	Test	CHECKOFF Initials		Downstream Temp (F)	NOTES:
SGF-MBV-52	Roof Inlet header drain	M2068	4	fdr dck	west boiler	W boil drn bldwn hdr						F	
SGF-MBV-50	Sec SH Platen inlet drain header	M2068	4	fdr dck	west boiler	W boil drn bldwn hdr						F	
SGF-BV-48	Economizer discharge header drn	M2068	4	fdr dck	west boiler	W boil drn bldwn hdr						F	
SGF-MBV-46	Sec SH Intermediate inlet hdr drain	M2068	4	fdr dck	west boiler	W boil drn bldwn hdr						F	
SGF-MBV-44	Sec SH Intermediate inlet hdr drain	M2068	4	fdr dck	west boiler	W boil drn bldwn hdr						F	
PSA-TRP-16	Aux stm from drum and SSH stm t	M2008	14	S-boiler	south boiler	RH outlet bldwn hdr						F	
SGA-TRP-02	Main stm to Aux stm hdr drain trap	M2063A	16	Wboiler	west boiler	Mn Stm drip pkt drn						F	
SGF-BV-40	Reheater outlet header drain	M2068	4	fdr dck	west boiler	RH outlet hdr bldwn						F	
SGF-BV-38	Reheater outlet header drain	M2068	4	fdr dck	west boiler	RH outlet hdr bldwn						F	
SGF-MBV-36	Lower convect pass hdr drain	M2068	4	fdr dck	west boiler	W boil drn bldwn hdr						F	
SGF-BV-34	Reheater inlet header drain	M2068	4	fdr dck	west boiler	W boil drn bldwn hdr						F	
SGF-BV-31	Economizer inlet header drain	M2068	4	fdr dck	west boiler	W boil drn bldwn hdr						F	
SGA-BV-19	Drum level gage drain	M2063B	18	W-Drum	west boiler	W boil drn bldwn hdr						F	
SGA-BV-26	Drum level gage drain	M2063B	18	W-Drum	west boiler	W boil drn bldwn hdr						F	
SGF-MBV-29	Lower convect pass hdr drain	M2068	4	fdr dck	west boiler	W boil drn bldwn hdr						F	
SGF-MBV-42	Sec SH outlet header drain	M2068	4	fdr dck	west boiler	Blowdown Tank 1						F	
SGA-BV-32	Drum steam pressure gage drain	M2063B	18	W-Drum	west boiler	W boil drn bldwn hdr						F	

LOCATION: EAST SIDE BOILER DRAINS

VALVE NUMBER	DESCRIPTION	P&ID	LOCATION Floor	Near	Area	Termintaion Point	CLASS	VALVE POSITION Normal	Test	CHECKOFF Initials		Downstream Temp (F)	NOTES:
SGA-TRP-03	Drum to Aux stm drain stm trp	M2063B	18	S-boiler	east boiler	E boil drn bldwn hdr						F	
SGF-BV-54	Economizer discharge header drn	M2068	4	sub-fdr	east boiler	E boil drn bldwn hdr						F	
SGF-MBV-56	Lower convect pass hdr drain	M2068	4	sub-fdr	east boiler	E boil drn bldwn hdr						F	
SGF-MBV-58	Lower convect pass hdr drain	M2068	4	sub-fdr	east boiler	E boil drn bldwn hdr						F	
SGA-MBV-4	Drum continuous blowdown	M2068	18	E-drum	east boiler	E boil drn bldwn hdr						F	
PSA-TRP-01	Cold Reheat Aux Steam Supply	M2008	8	SE-boil	east elev	E boil drn bldwn hdr						F	

LOCATION: MAIN STEAM DRIP POCKET

VALVE NUMBER	DESCRIPTION	P&ID	LOCATION Floor	Near	Area	Termintaion Point	CLASS	VALVE POSITION Normal	Test	CHECKOFF Initials		Downstream Temp (F)	NOTES:
SGG-MBV-11	Main Steam to Blowdown Tank	M2069	2	SE-boil	NE-SV&CV	Blowdown Tank						F	
SGG-MBV-12	Main Steam to Blowdown Tank	M2069	2	SE-boil	NE-SV&CV	Blowdown Tank						F	
SGG-MBV-13	Main Steam to Blowdown Tank	M2069	2	SE-boil	NE-SV&CV	Blowdown Tank						F	
SGG-MBV-14	Main Steam to Blowdown Tank	M2069	2	SE-boil	NE-SV&CV	Blowdown Tank						F	

LOCATION: DOWNCOMER DRAINS

VALVE NUMBER	DESCRIPTION	P&ID	LOCATION Floor	Near	Area	Termintaion Point	CLASS	VALVE POSITION Normal	Test	CHECKOFF Initials		Downstream Temp (F)	NOTES:
SGF-BV-59	Drum West End Downcomer	M2068	2	S-boiler	N of Htr 2	DwncmDrnBldnHdr						F	
SGF-BV-60	Drum West End Downcomer	M2068	2	S-boiler	N of Htr 2	DwncmDrnBldnHdr						F	
SGF-BV-61	Drum West Shell Downcomer	M2068	2	S-boiler	N of Htr 2	DwncmDrnBldnHdr						F	

IP7016716

SGF-BV-62	Drum West Shell Downcomer	M2068	2	S-boiler	N of Htr 2	DwncmDrnBldnHdr						F	
SGF-MBV-66	Downcomer Drain Manifold Drain	M2068	2	S-boiler	N of Htr 2	DwncmDrnBldnHdr						F	
SGF-BV-63	Drum Center Shell Downcomer	M2068	2	S-boiler	N of Htr 2	DwncmDrnBldnHdr						F	
SGF-BV-64	Drum Center Shell Downcomer	M2068	2	S-boiler	N of Htr 2	DwncmDrnBldnHdr						F	
SGF-BV-67	Drum East Shell Downcomer	M2068	2	S-boiler	N of Htr 2	DwncmDrnBldnHdr						F	
SGF-BV-68	Drum East Shell Downcomer	M2068	2	S-boiler	N of Htr 2	DwncmDrnBldnHdr						F	
SGF-BV-69	Drum East End Downcomer	M2068	2	S-boiler	N of Htr 2	DwncmDrnBldnHdr						F	
SGF-BV-70	Drum East End Downcomer	M2068	2	S-boiler	N of Htr 2	DwncmDrnBldnHdr						F	

LOCATION: SUPERHEAT BYPASS

			LOCATION					VALVE POSITION		CHECKOFF		Downstream	
VALVE NUMBER	DESCRIPTION	P&ID	Floor	Near	Area	Termintaion Point	CLASS	Normal	Test	Initials		Temp (F)	NOTES:
SGA-TRP-1	Superheat Bypass Drain Trap	M2063A	12	NW-boil	NW corner	Partial Byp Drn Cnd						F	
SGA-ACV-137	Superheat Bypass	M2063A	2	W-Cond	NW corner	C Condenser-West						F	

LOCATION: MISCELLANEOUS VALVES

			LOCATION					VALVE POSITION		CHECKOFF		Downstream	
VALVE NUMBER	DESCRIPTION	P&ID	Floor	Near	Area	Termintaion Point	CLASS	Normal	Test	Initials		Temp (F)	NOTES:
FWA-BV-299	Bootstrap Valve	M2035A	2	SW-boil	SW Htr 2							F	
FWC-ACV-28	DEA Recirc	M2037	2	W-Cond	NW corner	C Condenser-West						F	
TEC-ACV-152	1B BFPT Extraction Drain	M2075	2	W-Cond	NW corner	Cond-Basement						F	

LOCATION: VACUUM PUMPS

			LOCATION					VALVE POSITION		CHECKOFF		Downstream	
VALVE NUMBER	DESCRIPTION	P&ID	Floor	Near	Area	Termintaion Point	CLASS	Normal	Test	Initials		Temp (F)	NOTES:
HRB-P-1A	1A Vacuum Pump	M2021	2	SE-Boil	East Elevtr							F	
HRB-P-1B	1B Vacuum Pump	M2021	2	SE-Boil	East Elevtr							F	
HRB-P-1C	1C Vacuum Pump	M2021	2	SE-Boil	East Elevtr							F	
HRB-P-1D	1D Vacuum Pump	M2021	2	SE-Boil	East Elevtr							F	

LOCATION:

			LOCATION					VALVE POSITION		CHECKOFF		Downstream	
VALVE NUMBER	DESCRIPTION	P&ID	Floor	Near	Area	Termintaion Point	CLASS	Normal	Test	Initials		Temp (F)	NOTES:
TGA-ABV-2	Ventilator Valve	M2079	2	CV's	E A Cond	Atm - roof vents						F	
FWA-PS-70	BFP 1A Inlet Strainer DP	M2035A	2	N-Cond	BFPT Exh							F	
FWA-PS-71	BFP 1B Inlet Strainer DP	M2035A	2	N-Cond	BFPT Exh							F	
SGI-ABV-21	AH Soot Blower Drain	M2070	3	NE-Boil	Stairs	Cond						F	
SGI-ABV-22	AH Soot Blower Drain	M2070	3	NW-Boil	Stairs	Cond						F	
SGI-ABV-170	Boiler Soot Blower Drain	M2070	7	W-Boil		Cond						F	
SGI-ABV-171	Boiler Soot Blower Drain	M2070	7	E-Boil		Cond						F	
SGI-ABV-172	Boiler Soot Blower Drain	M2070	11	E-Boil	Backpass	Cond						F	
SGI-ABV-173	Boiler Soot Blower Drain	M2070	11	W-Boil	Backpass	Cond						F	
SGA-MBV-173	Economizer Recirc	M2063A	10.5	W-Boil	Backpass	Economizer inlet						F	
SGA-MBV-174	Economizer Recirc	M2063A	10.5	E-Boil	Backpass	Economizer inlet						F	

IP7016717

SGG-MCV-18	Main Steam Warming Line	M2069	2	E-CV'S		Cond						F	
SGG-MBV-25	Main Steam Line Drain	M2069	2	E-CV'S		Cond						F	
SGG-MBV-26	Main Steam Line Drain	M2069	2	E-CV'S		Cond						F	
SGG-MBV-55	Main Steam to BFPT Drain	M2069	2	E-CV'S		Cond						F	
SGG-MBV-56	Main Steam to BFPT Drain	M2069	2	E-CV'S		Cond						F	
PSA-ACV-60	Drum Aux Steam Supply	M2008	17	S-Boil		Aux						F	
PSA-ACV-57	SSH Aux Steam Supply	M2008	17	W-Boil		Aux						F	

IP7016718

Priority I [redacted], II [redacted], III [redacted]

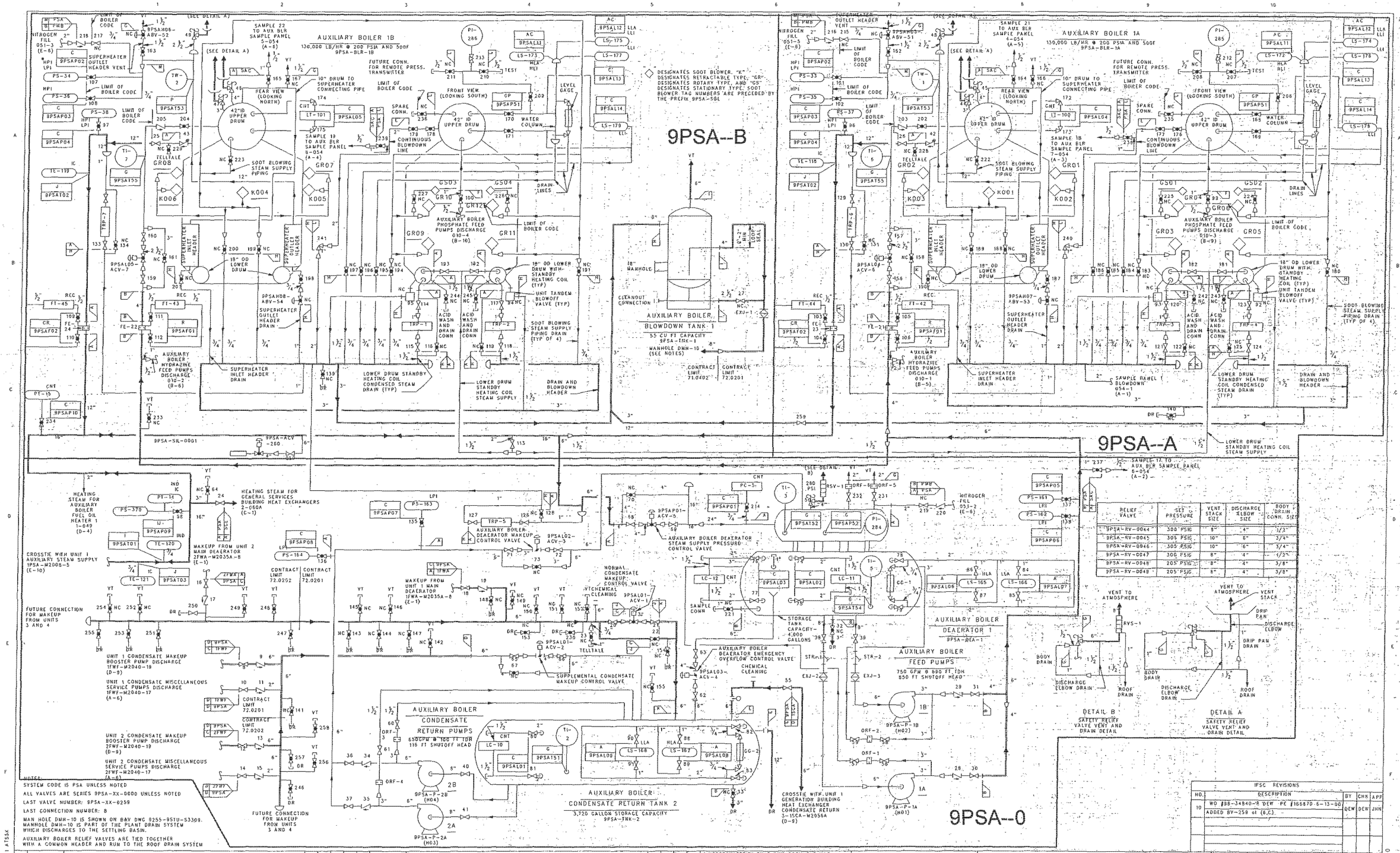

RELIEF VALVE	SET PRESSURE	VENT STACK SIZE	DISCHARGE ELBOW SIZE	BODY DRAIN CONN. SIZE
9PSA-RV-0044	300 PSIG	8"	4"	1/2"
9PSA-RV-0045	305 PSIG	10"	6"	3/4"
9PSA-RV-0046	305 PSIG	10"	6"	3/4"
9PSA-RV-0047	300 PSIG	8"	4"	1/2"
9PSA-RV-0048	205 PSIG	8"	4"	3/8"
9PSA-RV-0049	205 PSIG	8"	4"	3/8"

NOTES:
SYSTEM CODE IS PSA UNLESS NOTED
ALL VALVES ARE SERIES 9PSA-XX-0000 UNLESS NOTED
LAST VALVE NUMBER: 9PSA-XX-0259
LAST CONNECTION NUMBER: 8
MAN HOLE DMH-10 IS SHOWN ON B&V DWG 9255-9STU-S3309. MANHOLE DMH-10 IS PART OF THE PLANT DRAIN SYSTEM WHICH DISCHARGES TO THE SETTLING BASIN.
AUXILIARY BOILER RELIEF VALVES ARE TIED TOGETHER WITH A COMMON HEADER AND RUN TO THE ROOF DRAIN SYSTEM

IPSC REVISIONS

NO.	DESCRIPTION	BY	CHK	APP
10	WO #98-34840-8 DEW PE #166870 6-13-00 ADDED BV-259 at (6,C)	DEW	DEW	JHN

NO	DATE	REVISIONS AND RECORD OF ISSUE	BY	CHK	APP	FLM
7	07-01-87	CONFORMED TO CONSTRUCTION RECORDS	GTB	MJC	HLJ	
6	03-17-86	ADDED VENT AND DRAIN VALVES, REVISED AUX BOILER ISLN	PCB	CLK	HLJ	
5	01-11-85	GENERAL REVISIONS	MJC	CLK	HLJ	
4	09-14-84	APPROVED FOR CONSTRUCTION SPEC. 72.0202 AND 72.0403	MJC	CLK	HLJ	
3	07-05-84	APPROVED FOR CONSTRUCTION SPEC. 74.0201	MJC	CLK	HLJ	
2	04-13-84	GENERAL REVISIONS RELEASED FOR CONST. SPEC. 72.0201	MJC		HLJ	
1	01-13-84	GENERAL REVISIONS	MJC		HLJ	
0	4-29-83	INITIAL ISSUE	MJC		HLJ	

I HEREBY CERTIFY THAT THIS DOCUMENT WAS PREPARED BY ME OR UNDER MY DIRECT SUPERVISION AND THAT I AM A DULY REGISTERED PROFESSIONAL ENGINEER UNDER THE LAWS OF THE STATE OF UTAH.
SIGNED Hobart Lee Jacobs
DATE 4-29-83 REG NO. 5746

BLACK & VEATCH CONSULTING ENGINEERS
ENGINEER MJC DRAWN AGG
CHECKED C.L. KLING DATE 07-02-84

IPP INTERMOUNTAIN POWER PROJECT
PIPING AND INSTRUMENT DIAGRAM
AUXILIARY STEAM

PROJECT 9255 - DRAWING NUMBER 9PSA-M2008 REV 10
CODE PSA-52.0601
AREA
A00007750

8-M900255

9255-9PSA-M2008
M2PD
10/22/87 07:53:11 ATSSK

6-13-00

ZF3:(300,300)A00007750.DGN

IP7016719

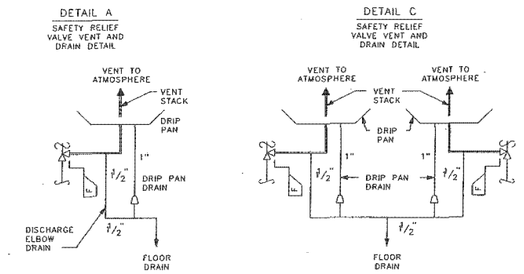

RELIEF VALVE	SET PRESSURE	VENT STACK SIZE	DISCHARGE ELBOW SIZE
2PSA-RV-0043	160 PSIG	12"	6"
2PSA-RV-0044	240 PSIG	18"	10"
2PSA-RV-0045	250 PSIG	18"	10"
2PSA-RV-0051	770 PSIG	16"	8"
2PSA-RV-0052	760 PSIG	16"	8"
2PSA-RV-0053	250 PSIG	20"	10"
2PSA-RV-0054	245 PSIG	20"	10"

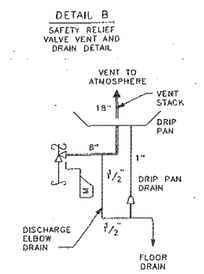

RELIEF VALVE	SET PRESSURE
2PSA-RV-0049	750 PSIG
2PSA-RV-0050	740 PSIG

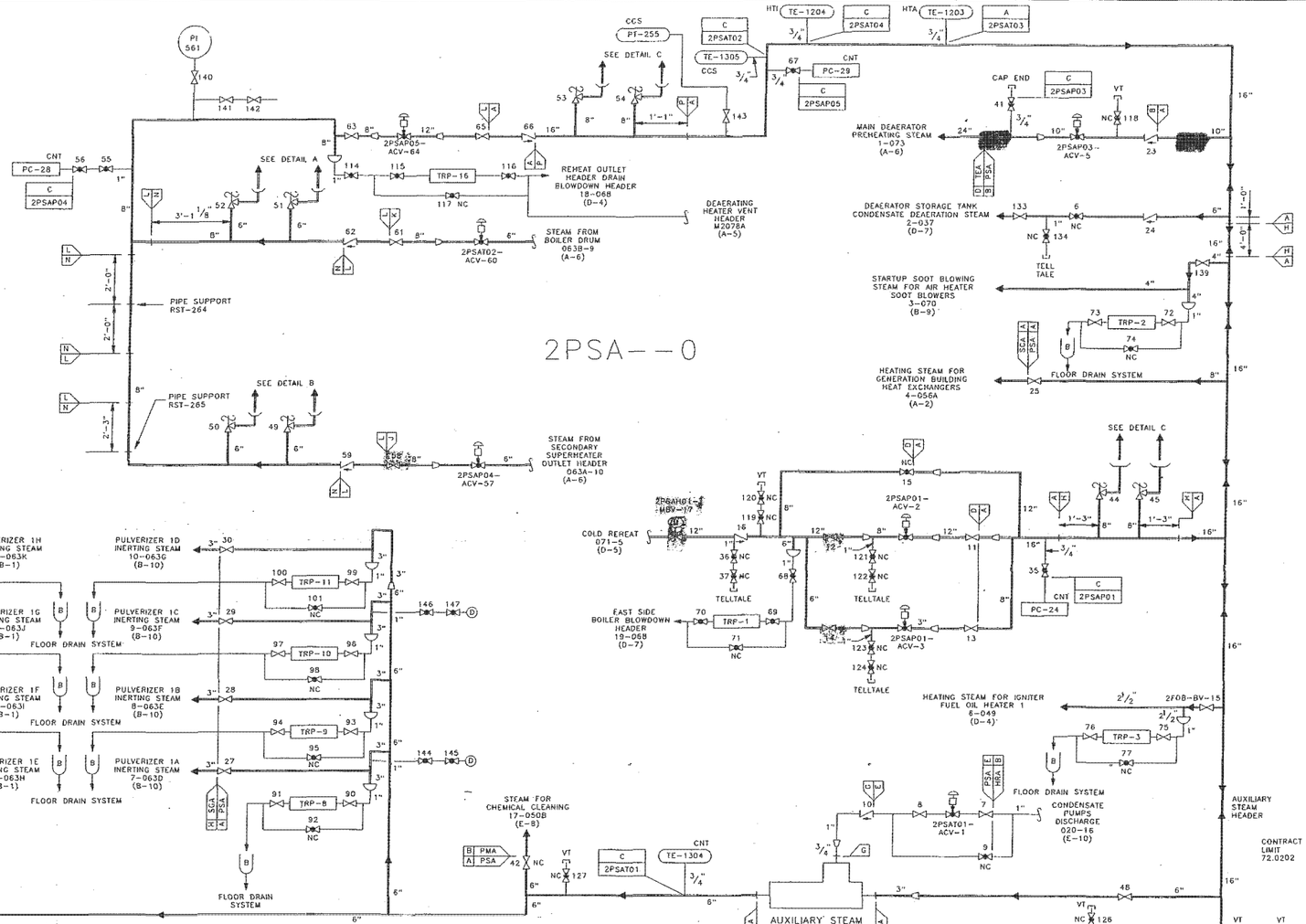

NOTES: SYSTEM CODE IS PSA UNLESS NOTED

ALL VALVES ARE SERIES 2PSA-XX-0000 UNLESS NOTED

LAST VALVE NUMBER: 2PSA-XX-0139

LAST CONNECTION NUMBER: 21

DWP REVISIONS				
NO.	DESCRIPTION	BY	CHK	APP
7	IPSC W.O. 92-65545-02; AS BUILT (4-A)			
	(7-A) ADD INSTRUMENTS PI-561 & PT-255			
	WITH VALVES			
8	IGS98-1s DEW PE #166870 6-4-00	DEW		JHN
	(2-C) ADDED STEAM CONNECTIONS TO			
	PULVERIZER A,C,F & H INERT LINES			

REV	DATE	DESCRIPTION	BY	CHK	APP
6	07-01-87	CONFORMED TO CONSTRUCTION RECORDS	GTB		
5	03-17-86	ADDED DETAIL C	PCB	CLK	HLJ
4	08-09-85	GENERAL REVISIONS	DLS	CLK	HLJ
3	05-10-85	APPROVED FOR CONSTRUCTION SPEC. 74.0201	DLS	CLK	HLJ
2	09-14-84	APPROVED FOR CONSTRUCTION SPEC. 72.0202 AND 72.0403	MJC	CLK	HLJ
1	04-13-84	GENERAL REVISIONS	MJC		HLJ
0	02-24-84	INITIAL ISSUE	MJC		HLJ

NO.	DATE	REVISIONS AND RECORD OF ISSUE	BY	CHK	APP	FLM
6	07-01-87	CONFORMED TO CONSTRUCTION RECORDS	GTB			
5	03-17-86	ISSUED TO CONTRACTOR SPEC. 74.0201, 72.0202, 72.0403	PCB			
4	08-09-85	ISSUED TO CONTRACTOR SPEC. 74.0201, 72.0202, 72.0403	DLS			
3	05-10-85	APPROVED FOR CONST. SPEC. 74.0201	DLS			
3	05-10-85	ISSUED TO CONTRACTOR SPEC. 72.0202 AND 72.0403	DLS			
2	09-14-84	APPROVED FOR CONST. SPEC. 72.0403	MJC			
2	09-14-84	APPROVED FOR CONST. SPEC. 72.0202	MJC			
1	04-13-84	ISSUED FOR ADDENNDUM 1 SPEC. 72.0403	MJC			
0	03-09-84	ISSUED FOR BID SPEC. 72.0403	MJC			
0	02-24-84	ISSUED FOR BID SPEC. 72.0202	MJC			

I HEREBY CERTIFY THAT THIS DOCUMENT WAS PREPARED BY ME OR UNDER MY DIRECT SUPERVISION AND THAT I AM A DULY REGISTERED PROFESSIONAL ENGINEER UNDER THE LAWS OF THE STATE OF UTAH

SIGNED Hobart Lee Jacobs

DATE 2-24-84 REG NO. 5746

BLACK & VEATCH CONSULTING ENGINEERS

ENGINEER MJC | DRAWN AGG | CHECKED CL KLING | DATE 09-07-84

IPP INTERMOUNTAIN POWER PROJECT

PIPING AND INSTRUMENT DIAGRAM
AUXILIARY STEAM

PROJECT 9255 | DRAWING NUMBER 2PSA-M2008 | REV 8

CODE PSA-52.0601 | AREA

A00007449

IP7016720

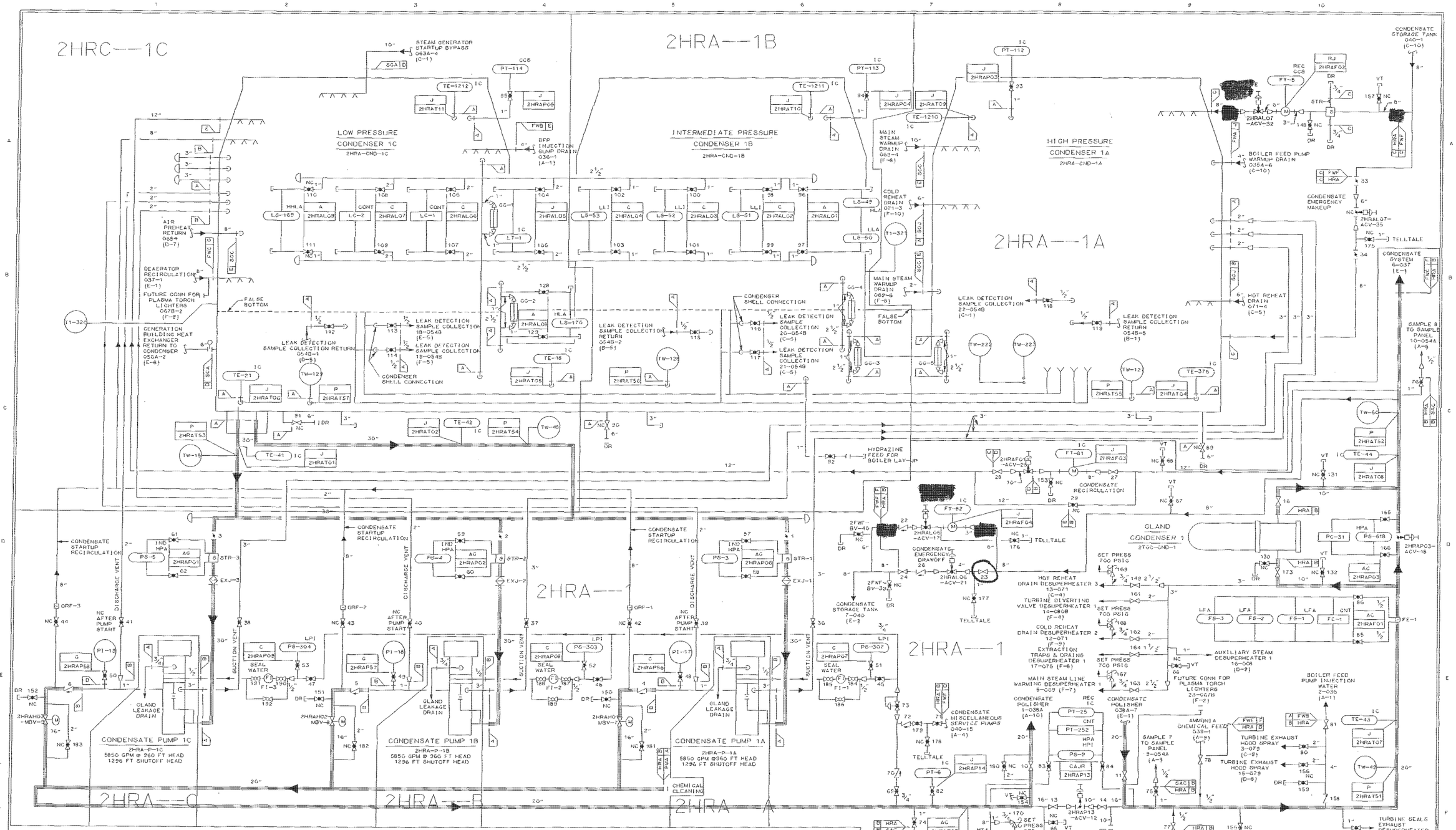

NOTES:
SYSTEM CODE IS HRA UNLESS NOTED
ALL VALVES ARE SERIES 2HRA-XX-0000 UNLESS NOTED
LAST VALVE NUMBER: 2HRA-XX-0184
LAST CONNECTION NUMBER: 23

I HEREBY CERTIFY THAT THIS DOCUMENT WAS PREPARED BY ME OR UNDER MY DIRECT SUPERVISION AND THAT I AM A DULY REGISTERED PROFESSIONAL ENGINEER UNDER THE LAWS OF THE STATE OF IDAHO
SIGNED
DATE 02-24-84 REG NO. 5746

NO	DATE	REVISIONS AND RECORD OF ISSUE	BY	CHK	APP	FLM
9	07-14-97	ADD BYPASS VALVES TO FI-1,2,3 (92-51431-00)	CDJ	176059		
8	01-10-95	ADD TI-320, TI-321, TW-222, TW-223 (93-99005-00)	EJ	NK		
7	07-01-87	CONFORMED TO CONSTRUCTION RECORDS				
6	03-17-86	REVISED LINE CODES AND ADDED FLOW INDICATORS				
5	08-09-85	GENERAL REVISIONS				
4	06-11-85	GENERAL REVISIONS				
3	05-10-85	APPROVED FOR CONSTRUCTION SPEC 74.0201	NJA	LJS	HL	
2	09-14-84	RELEASED FOR CONSTRUCTION-SPEC 72.0202 & SPEC. 72.0403	BDM	LJS	HL	
1	05-04-84	GENERAL REVISIONS	BDM		HL	
0	02-24-84	INITIAL ISSUE	LJS		HL	

8-M950074

NO	DATE	REVISIONS AND RECORD OF ISSUE	BY	CHK	APP	FLM
7	07-01-87	CONFORMED TO CONSTRUCTION RECORDS				
6	03-17-86	ISSUED TO CONTR-72.0202, 74.0201	PGG			
5	08-09-85	ISSUED TO CONTR-72.0202, 74.0201	NJA			
4	06-11-85	ISSUED TO CONTR-72.0202, 74.0201	NJA			
3	05-10-85	APPROVED FOR CONSTRUCTION SPEC 74.0201	NJA			
3	05-10-85	ISSUED TO CONTRACTOR SPEC 72.0202	NJA			
3		ISSUED TO CONTRACTOR - 72.0202	BDM			
2	09-14-84	RELEASED FOR CONSTRUCTION-SPEC 72.0202 AND SPEC 72.0403	BDM			
1	05-04-84	ISSUED FOR ADDENDUM 1- SPEC. 72.0202	BDM			
0	02-24-84	ISSUED FOR BID SPEC. 72.0202	RSP			

BLACK & VEATCH CONSULTING ENGINEERS

ENGINEER RSP | DRAWN AGG | CHECKED LJS | DATE 09-07-84

IPP INTERMOUNTAIN POWER PROJECT

PIPING AND INSTRUMENT DIAGRAM
CONDENSING

PROJECT / DRAWING NUMBER: 9255 - 2HRA-M2020 | REV 9
CODE HRA-52.2601
AREA
A00006649

9255-2HRA-M2020
M2P01 10/22/87 09:06:46 ATSSK

A00006649.DGN

IP7016721

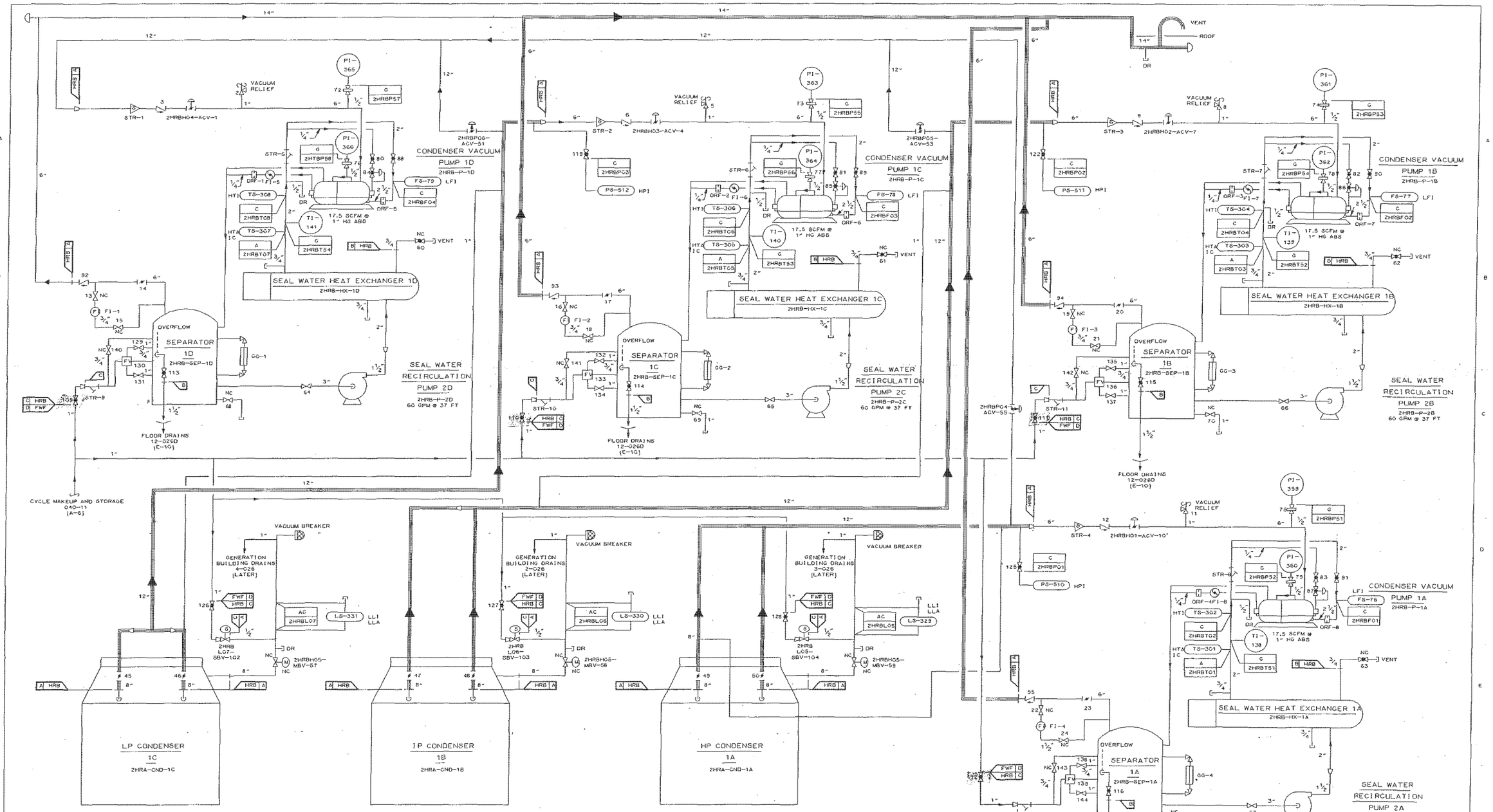

NOTES:
SYSTEM CODE IS HRB UNLESS NOTED
ALL VALVES ARE SERIES 2HRB-XX-0000 UNLESS NOTED
LAST VALVE NUMBER: 2HRB-XX-0144
LAST CONNECTION NUMBER: 4

DWP REVISIONS		
NO.	DESCRIPTION	
4	IGS91-17: AS BUILT REMVD SPRTRS 1A THRU 1D COMMON OVERFLOW DRN HDR TO MISC DRN RECEIVER & REPLCD W/INDIVIDUAL DRNS TO FLR DRNS.	
5	IGS 95-9 IN PE #8287 04/04/97 REVISE FLOOR DRAIN REF. LOCATION FROM SEPARATORS	

Revision Number 5
DRAFTING RELEASE
DRAWN BY B. WARNER
CHECKED BY PHONG DO
ENGINEERING APPROVAL JAMES H. NELSON
PE #8287

OWNER/AGENT APPROVAL
DRAWING REVISION RELEASE APPROVAL
FINAL APPROVAL RELEASE SIGNATURE DATE

NO.	DATE	REVISIONS AND RECORD OF ISSUE	BY	CHK	APP	FLM
3	07-01-87	CONFORMED TO CONSTRUCTION RECORDS				
2	05-10-85	APPROVED FOR CONSTRUCTION – SPEC 74.0202	NJA	LJS	HLJ	
1	09-14-84	APPROVED FOR CONSTRUCTION – SPEC 72.0202	NJA	LJS	HLJ	HLJ
0	02-24-84	INITIAL ISSUE	NJA		HLJ	

I HEREBY CERTIFY THAT THIS DOCUMENT WAS PREPARED BY ME OR UNDER MY DIRECT SUPERVISION AND THAT I AM A DULY REGISTERED PROFESSIONAL ENGINEER UNDER THE LAWS OF THE STATE OBTAH
SIGNED
DATE 02-24-84 REG NO. 5746

BLACK & VEATCH CONSULTING ENGINEERS
ENGINEER NJA DRAWN AGG
CHECKED LJS DATE 09-07-84

IPP INTERMOUNTAIN POWER PROJECT

PIPING AND INSTRUMENT DIAGRAM
CONDENSER AIR EXTRACTION

PROJECT 9255 – DRAWING NUMBER 2HRB-M2021 REV 5
CODE HRB-52.2602
AREA
A00006646

3 07-01-87 CONFORMED TO CONSTRUCTION RECORDS GTB
2 05-10-85 APPROVED FOR CONST. SPEC. 74.0202 DLS
2 05-10-85 ISSUED TO CONST. SPEC. 72.0201 NJA
1 09-14-84 APPROVED FOR CONSTRUCTION SPEC. 72.0202 NJA
0 02-24-84 ISSUED FOR BID SPEC. 72.0202 NJA

9255-2HRB-M2021
M2PD
10/22/87 05:47:18 ATSSK
6-04-97
4-M940050

IP7016722

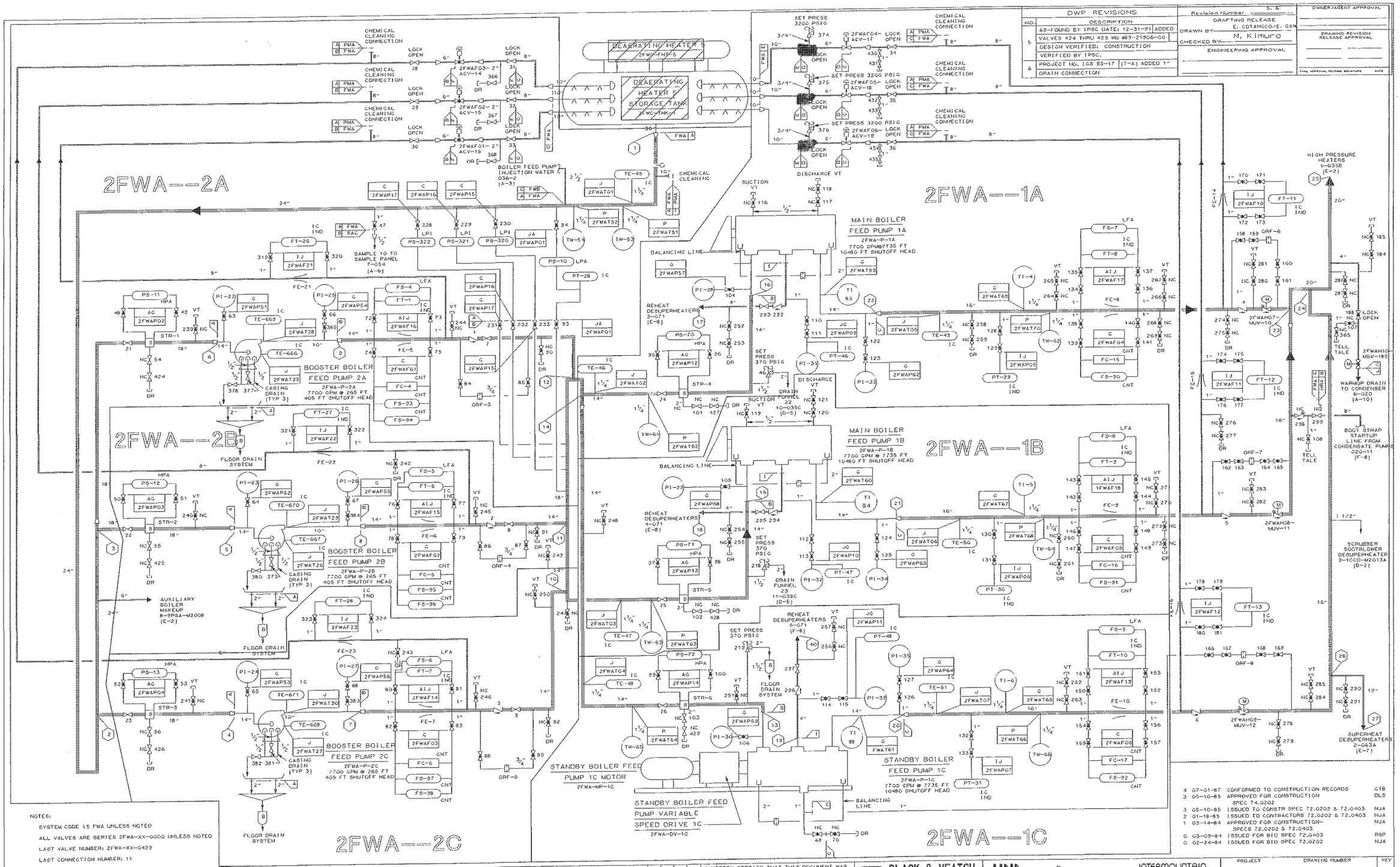

DWP REVISIONS		
NO.	DESCRIPTION	
5	AS-FOUND BY IPSC DATE: 12-31-91	ADDED
	VALVES 424 THRU 429 WO 883-21806-00	
	DESIGN VERIFIED: CONSTRUCTION	
	VERIFIED BY IPSC.	
6	PROJECT NO. IGS 93-17	(7-A) ADDED 1"
	DRAIN CONNECTION	

Revision Number 5, 6
DRAFTING RELEASE
DRAWN BY E. COTANGCO/E. GAW
CHECKED BY N. Kimuro
ENGINEERING APPROVAL
OWNER/AGENT APPROVAL
DRAWING REVISION RELEASE APPROVAL
FINAL APPROVAL RELEASE SIGNATURE DATE

NO.	DATE	REVISIONS AND RECORD OF ISSUE	BY	CHK	APP	FLM
4	07-01-87	CONFORMED TO CONSTRUCTION RECORDS	NJA	LJS	HL	
3	05-10-85	APPROVED FOR CONSTRUCTION SPEC 74.0202	NJA	LJS	HL	
2	01-18-85	GENERAL REVISIONS	NJA	LJS	HL	
1	09-14-84	APPROVED FOR CONSTRUCTION SPECS 72.0202 & 72.0403	NJA	LJS	HL	
0	02-24-84	INITIAL ISSUE	NJA	LJS	HL	

I HEREBY CERTIFY THAT THIS DOCUMENT WAS PREPARED BY ME OR UNDER MY DIRECT SUPERVISION AND THAT I AM A DULY REGISTERED PROFESSIONAL ENGINEER UNDER THE LAWS OF THE STATE OBTAN
SIGNED Hobart Lee Jacobs
DATE 02-24-84 REG NO. 5746

BLACK & VEATCH CONSULTING ENGINEERS
ENGINEER NJA DRAWN AGG
CHECKED LJS DATE 09-07-84

IPP INTERMOUNTAIN POWER PROJECT

PIPING AND INSTRUMENT DIAGRAM
BOILER FEED

PROJECT 9255 — 2FWA--M2035A REV 6
CODE FWA 52.3401
AREA
A00006707

NO.	DATE	REVISIONS AND RECORD OF ISSUE	BY	CHK	APP	FLM
4	07-01-87	CONFORMED TO CONSTRUCTION RECORDS	GTB			
3	05-10-85	APPROVED FOR CONSTRUCTION SPEC 74.0202	DLS			
3	05-10-85	ISSUED TO CONSTR SPEC 72.0202 & 72.0403	NJA			
2	01-18-85	ISSUED TO CONTRACTORS 72.0202 & 72.0403	NJA			
1	09-14-84	APPROVED FOR CONSTRUCTION- SPECS 72.0202 & 72.0403	NJA			
5	03-09-84	ISSUED FOR BID SPEC 72.0403	RSP			
0	02-24-84	ISSUED FOR BID SPEC 72.0202	NJA			

5-M930025, 6-M950086

A00006707.DGN

IP7016723

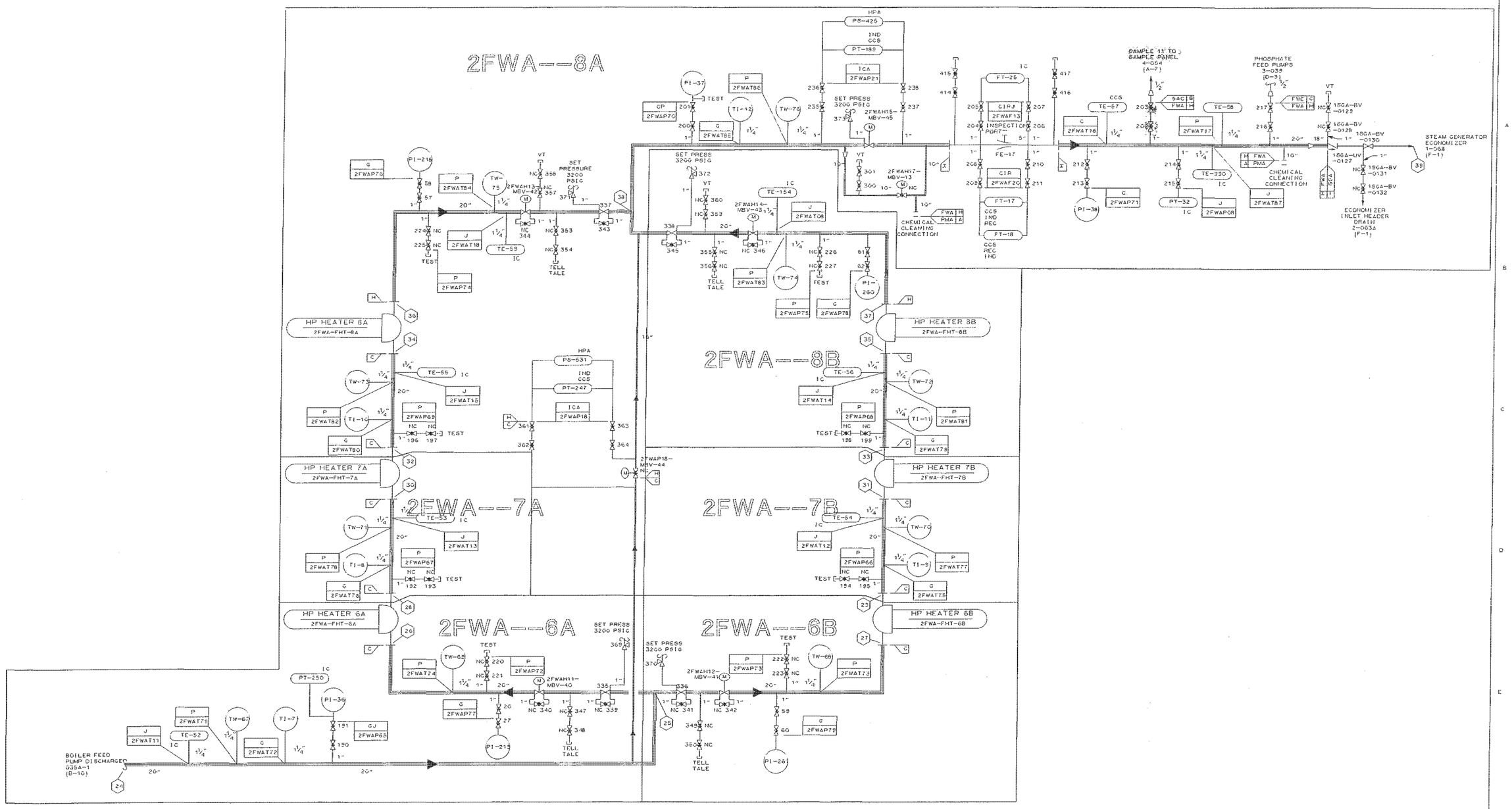

NOTES: SYSTEM CODE IS FWA UNLESS NOTED

ALL VALVES ARE SERIES 2FWA-XX-0000 UNLESS NOTED

LAST VALVE NUMBER: 2FWA-XX-0421

LAST CONNECTION NUMBER: 4

DWP REVISIONS		
NO.	DESCRIPTION	
6	IPSC W.O. 92-63682:AS-BUILT	7-A)
	DELETED INSTR FUNCTION LABELS	
	PROJ NO. 105 93-1ck	(4.5-B.E)ADDED
7	VALVE DESIGNATIONS TO MOTOR OPERATED	
	VALVES.	

Revision Number 6, 7

DRAFTING RELEASE

DRAWN BY E. GAW

CHECKED BY K. Kaiya/H. Kimura

ENGINEERING APPROVAL

OWNER/AGENT APPROVAL

DRAWING REVISION RELEASE APPROVAL

FINAL APPROVAL RELEASE SIGNATURE DATE

5	07-01-87	CONFORMED TO CONSTRUCTION RECORDS	GTB
4	03-17-86	ISSUED TO CONTR SPEC 72.0202, 72.0403, 74.0201	PCB
3	05-10-85	APPROVED FOR CONSTRUCTION SPEC 74.0201	DLG
3	05-10-85	ISSUED TO CONTR SPECS 72.0202, 72.0403	NJA
2	01-18-85	ISSUED TO CONTRACTORS SPECS 72.0202 & 72.0403	NJA
1	09-14-84	APPROVED FOR CONSTRUCTION SPECS 72.0202 & 72.0403	NJA
0	03-09-84	ISSUED FOR BID SPEC 72.0403	RSP
0	02-24-84	ISSUED FOR BID SPEC. 75.0201	NJA

NO.	DATE	REVISIONS AND RECORD OF ISSUE	BY	CHK	APP	FLM
5	07-01-87	CONFORMED TO CONSTRUCTION RECORDS	PCE	NJA	HLJ	
4	03-17-86	ADDED FE-17 TEST CONNECTION SHUTOFF VALVES				
3	05-10-85	APPROVED FOR CONSTRUCTION SPEC 74.0201	NJA	LJS	HLJ	
2	01-18-85	GENERAL REVISIONS	NJA	LJS	HLJ	
1	09-14-84	APPROVED FOR CONSTRUCTION SPECS 72.0202 & 72.0403	NJA	LJS	HLJ	
C	02-24-84	INITIAL ISSUE	NJA		HLJ	HLJ

I HEREBY CERTIFY THAT THIS DOCUMENT WAS PREPARED BY ME OR UNDER MY DIRECT SUPERVISION AND THAT I AM A DULY REGISTERED PROFESSIONAL ENGINEER UNDER THE LAWS OF THE STATE OBTAH

SIGNED

DATE 02-24-84 REG NO. 5746

BLACK & VEATCH CONSULTING ENGINEERS

ENGINEER NJA | DRAWN AGG | CHECKED LJS | DATE 09-07-84

IPP INTERMOUNTAIN POWER PROJECT

PIPING AND INSTRUMENT DIAGRAM
BOILER FEED

PROJECT 9255 — DRAWING NUMBER 2FWA-M2035B — REV 7

CODE FWA-52.3401

AREA

A00006709

6-M950055 7-M950104

9255-2FWA-M2035B
MPC
10/22/87 14:03:19 ATSSK

1-31-95

IP7016724

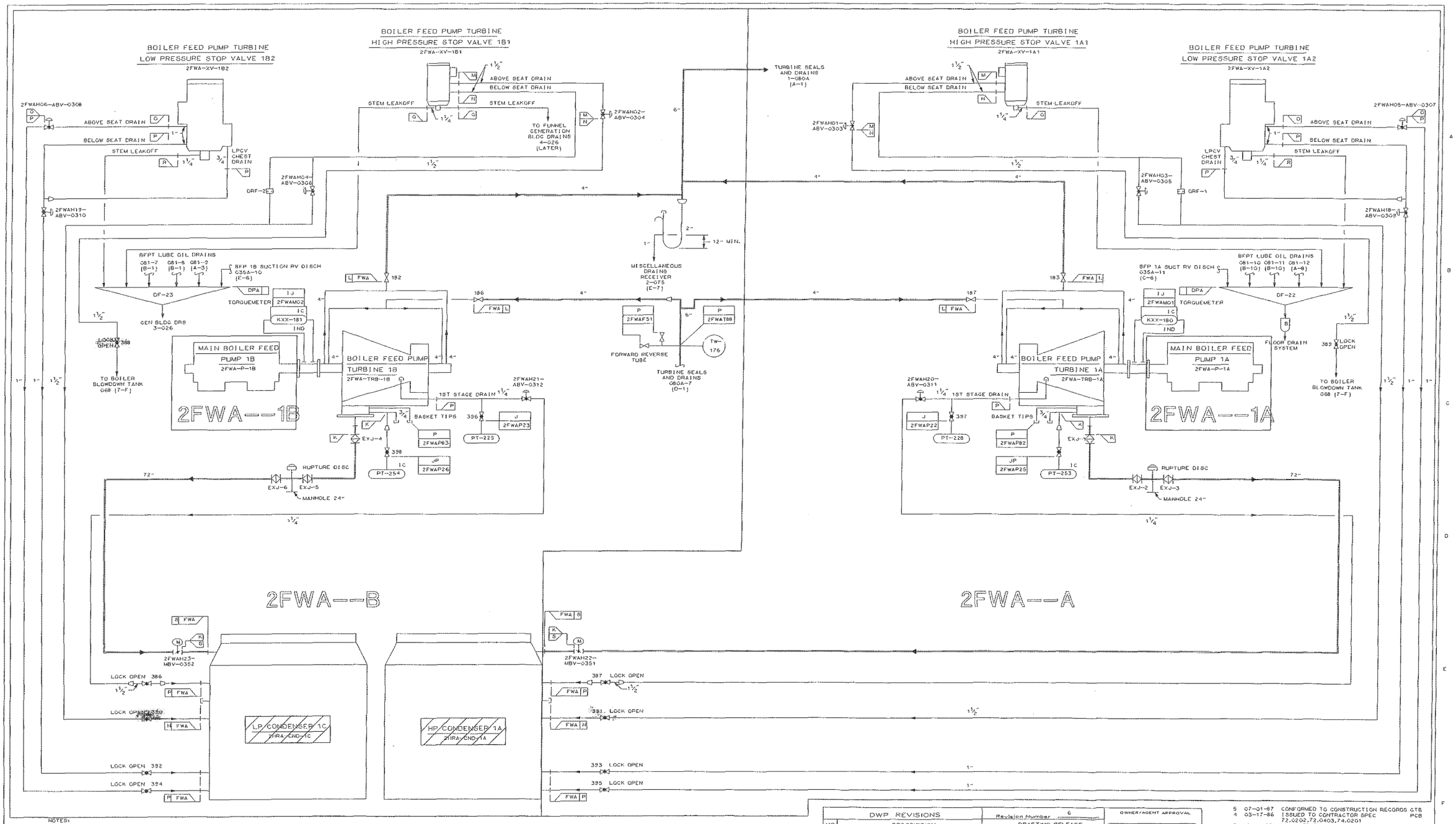

NOTES:

SYSTEM CODE IS FWA UNLESS NOTED

ALL VALVES ARE SERIES: 2FWA-XX-0000 UNLESS NOTED

LAST VALVE NUMBER: 2FWA-XX-0421

LAST CONNECTION NUMBER: 5

BOILER FEED PUMP TURBINE
SEALS, DRAINS AND EXHAUST

DWP REVISIONS		
NO	DESCRIPTION	
	AS-BUILT:CMP 249	(1.10-C) 1A1 & 1B1
6	STOP VLV ABOVE SEAT DRAIN REDIRECTED	
	TO BLOWDOWN TANK.	

Revision Number 6
DRAFTING RELEASE
DRAWN BY: Robert Ulate
CHECKED BY: N. Kimura
ENGINEERING APPROVAL

OWNER/AGENT APPROVAL
DRAWING REVISION RELEASE APPROVAL
FINAL APPROVAL RELEASE SIGNATURE DATE

NO	DATE	REVISIONS AND RECORD OF ISSUE	BY	CHK	APP	FLM
5	07-01-87	CONFORMED TO CONSTRUCTION RECORDS	PCB	NJA	HLJ	
4	03-17-86	DELETE TURBINE EXHAUST PRESSURE INDICATORS	PCB	NJA	HLJ	
3	05-10-85	APPROVED FOR CONSTRUCTION SPEC 74.0201	NJA	LJS	HLJ	
2	01-18-85	GENERAL REVISIONS	NJA	LJS	HLJ	
1	09-14-84	APPROVED FOR CONSTRUCTION - SPECS 72.0202 & 72.0403	NJA	LJS	HLJ	
0	02-24-84	INITIAL ISSUE	NJA		HLJ	

I HEREBY CERTIFY THAT THIS DOCUMENT WAS PREPARED BY ME OR UNDER MY DIRECT SUPERVISION AND THAT I AM A DULY REGISTERED PROFESSIONAL ENGINEER UNDER THE LAWS OF THE STATE OBTAIN
SIGNED Hobart Lee Jacobs
DATE 02-24-84 REG NO. 5746

BLACK & VEATCH CONSULTING ENGINEERS
ENGINEER NJA DRAWN AGG
CHECKED LJS DATE 09-07-84

IPP INTERMOUNTAIN POWER PROJECT

PIPING AND INSTRUMENT DIAGRAM
BOILER FEED

PROJECT 9255 — DRAWING NUMBER 2FWA-M2035C REV 6
CODE FWA-52.3401
AREA
A00006711

NO	DATE	REVISIONS AND RECORD OF ISSUE	BY	CHK	APP	FLM
5	07-01-87	CONFORMED TO CONSTRUCTION RECORDS GTB				
4	03-17-86	ISSUED TO CONTRACTOR SPEC 72.0202,72.0403,74.0201 PCB				
3	05-10-85	APPROVED FOR CONSTRUCTION SPEC 74.0201 DLS				
3	05-10-85	ISSUED TO CONTRACTORS SPECS 72.0202 & 72.0403 NJA				
2	01-18-85	ISSUED TO CONTRACTORS SPECS 72.0202 & 72.0403 NJA				
1	09-14-84	APPROVED FOR CONSTRUCTION SPECS 72.0202 & 72.0403 NJA				
0	03-09-84	ISSUED FOR BID SPEC 72.0403 RGP				
0	02-24-84	ISSUED FOR BID SPEC 72.0202 NJA				

9255-2FWA-M2035C
M2PD1
10/22/87 08:11:59 ATS6K

6-M890135.M900070

8-18-89

IP7016725

DWP REVISIONS		
NO.	DESCRIPTION	
7	AS-BUILT (5-A) ADDED FLASH TANKS (IGS 91-2)	
8	D5082-NCE49 IGS94-1AA (6-C) REPLACED SIGHT GLASS WITH LEVEL INDICATOR	

Revision Number 8
DRAFTING RELEASE
DRAWN BY E. GAW
CHECKED BY FB
ENGINEERING APPROVAL

OWNER/AGENT APPROVAL
DRAWING REVISION RELEASE APPROVAL
FINAL APPROVAL RELEASE SIGNATURE DATE

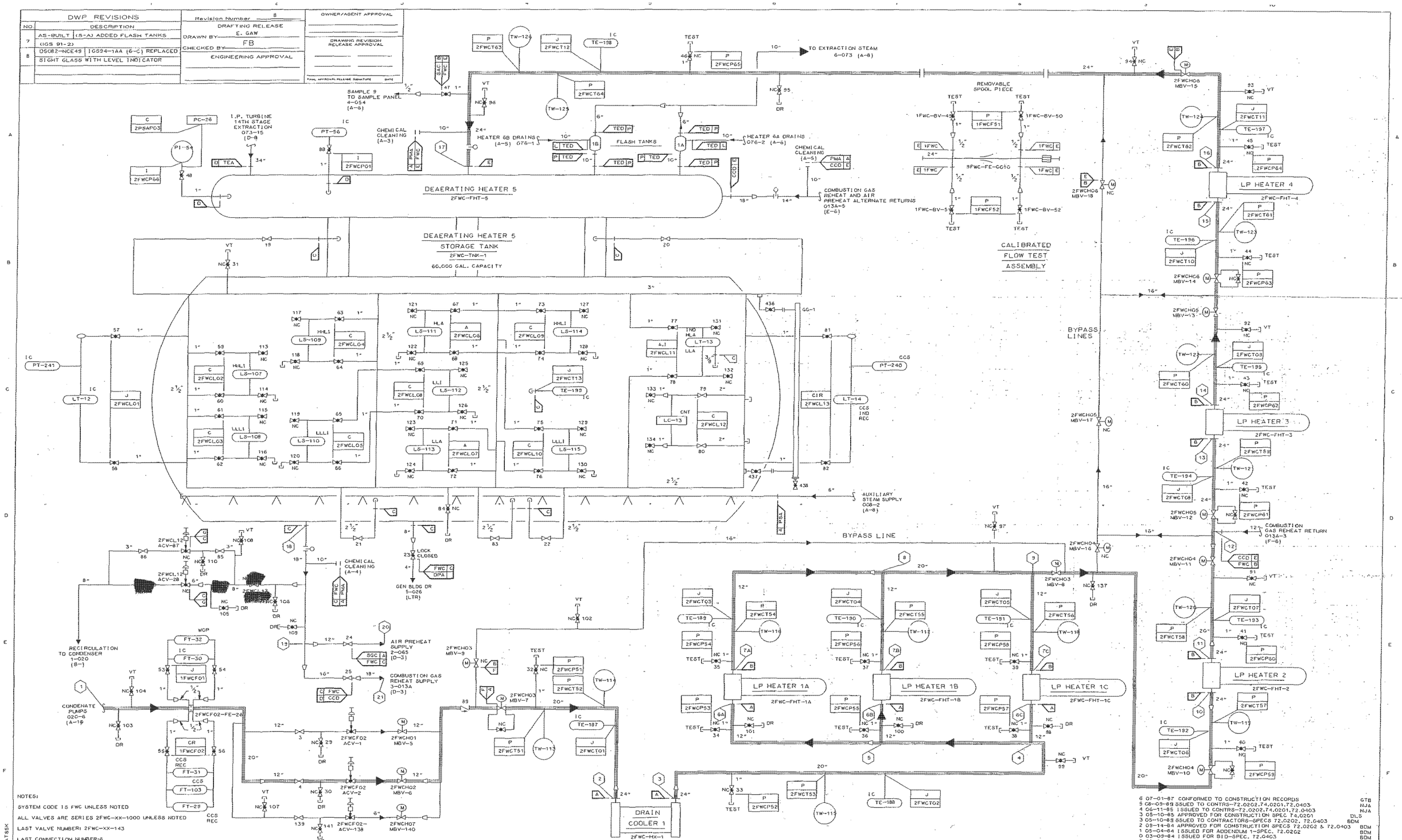

NOTES:

SYSTEM CODE IS FWC UNLESS NOTED

ALL VALVES ARE SERIES 2FWC-XX-1000 UNLESS NOTED

LAST VALVE NUMBER: 2FWC-XX-143

LAST CONNECTION NUMBER:6

NO.	DATE	REVISIONS AND RECORD OF ISSUE	BY	CHK	APP	FLM
6	07-01-87	CONFORMED TO CONSTRUCTION RECORDS				
5	08-09-85	GENERAL REVISION	NJA	LJS	HL	
4	06-11-85	GENERAL REVISION	NJA	LJS	HL	
3	05-10-85	APPROVED FOR CONSTRUCTION-SPEC 74.0201	DLS	LJS	HL	
3		GENERAL REVISIONS				
2	09-14-84	APPROVED FOR CONSTRUCTION-SPECS 72.0202 & 72.0403	BDM	LJS	HL	
1	05-04-84	GENERAL REVISIONS	BDM		HL	
0	02-24-84	INITIAL ISSUE	LJS		HL	

I HEREBY CERTIFY THAT THIS DOCUMENT WAS PREPARED BY ME OR UNDER MY DIRECT SUPERVISION AND THAT I AM A DULY REGISTERED PROFESSIONAL ENGINEER UNDER THE LAWS OF THE STATE OBTAH

SIGNED Hobart Lee Jacobs
DATE 02-24-84 REG NO. 5746

BLACK & VEATCH CONSULTING ENGINEERS

ENGINEER	DRAWN
BDM	AGG
CHECKED	DATE
LJS	09-07-84

IPP INTERMOUNTAIN POWER PROJECT

PIPING AND INSTRUMENT DIAGRAM
CONDENSATE

PROJECT 9255 — DRAWING NUMBER 2FWC-M2037 REV 8
CODE FWC-52.3403
AREA
A00006455

6 07-01-87 CONFORMED TO CONSTRUCTION RECORDS GTB
5 08-09-85 ISSUED TO CONTRS-72.0202,74.0201,72.0403 NJA
4 06-11-85 ISSUED TO CONTRS-72.0202,74.0201,72.0403 NJA
3 05-10-85 APPROVED FOR CONSTRUCTION SPEC 74.0201 DLS
3 05-10-85 ISSUED TO CONTRACTORS-SPECS 72.0202, 72.0403 BDM
2 09-14-84 APPROVED FOR CONSTRUCTION SPECS 72.0202 & 72.0403 BDM
1 05-04-84 ISSUED FOR ADDENDUM 1-SPEC. 72.0202 BDM
0 03-09-84 ISSUED FOR BID-SPEC. 72.0403 BDM
0 02-24-84 ISSUED FOR BID-SPEC. 72.0202 LJS

9255-2FWC-M2037
M2PD
10/22/87 05:28:35 ATSSK

8-M960026

IP7016726

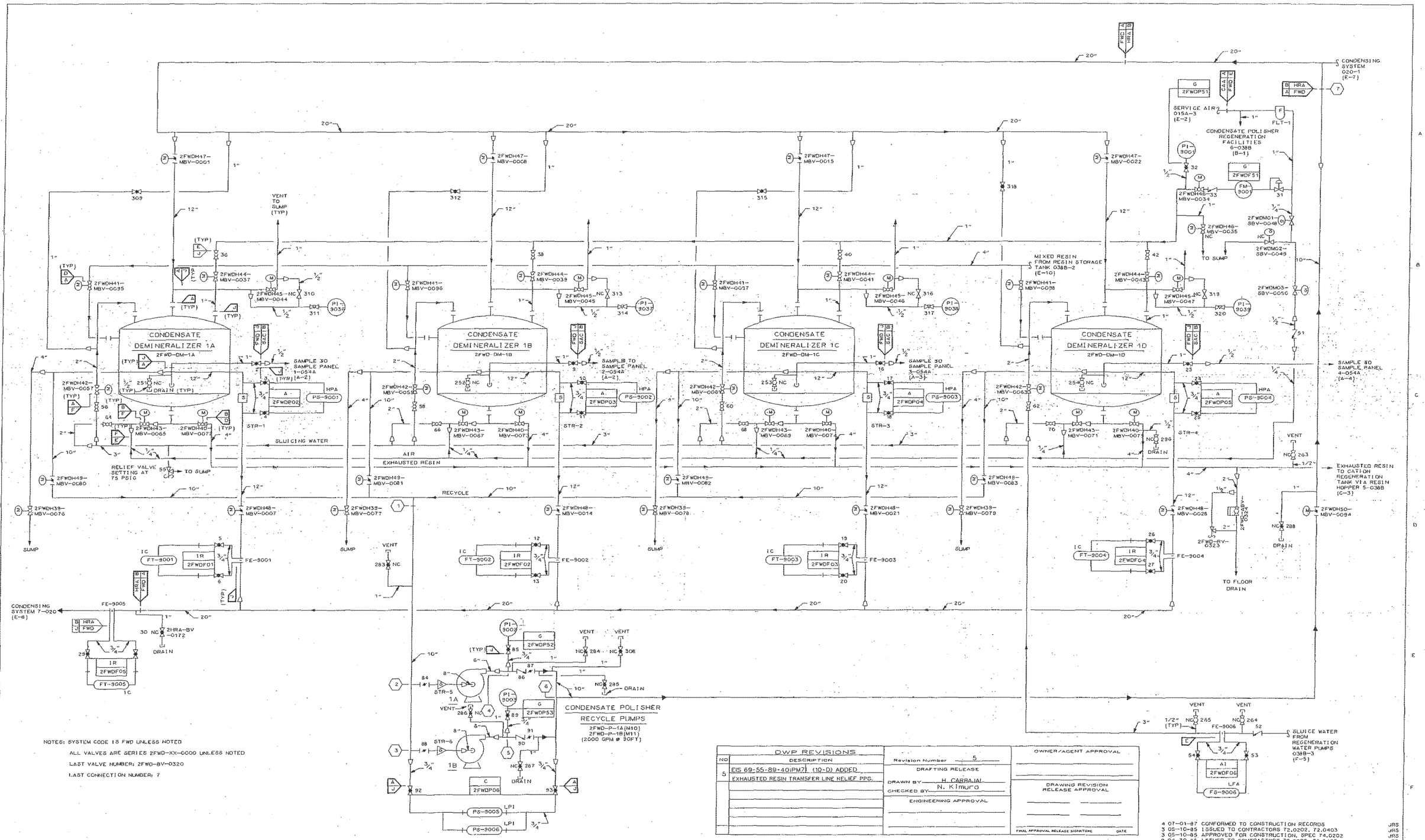
CONDENSATE DEMINERALIZER 1A
2FWD-DM-1A
CONDENSATE DEMINERALIZER 1B
2FWD-DM-1B
CONDENSATE DEMINERALIZER 1C
2FWD-DM-1C
CONDENSATE DEMINERALIZER 1D
2FWD-DM-1D
CONDENSING SYSTEM 020-1 (E-7)
SERVICE AIR 015A-3 (E-2)
CONDENSATE POLISHER REGENERATION FACILITIES 6-038B (B-1)
MIXED RESIN FROM RESIN STORAGE TANK 038B-2 (E-10)
SAMPLE TO SAMPLE PANEL 1-054A (A-2)
SAMPLE TO SAMPLE PANEL 2-054A (A-2)
SAMPLE TO SAMPLE PANEL 3-054A (A-3)
SAMPLE TO SAMPLE PANEL 4-054A (A-4)
SLUICING WATER
AIR
EXHAUSTED RESIN
RECYCLE
RELIEF VALVE SETTING AT 75 PSIG
TO SUMP
VENT TO SUMP (TYP)
EXHAUSTED RESIN TO CATION REGENERATION TANK VIA RESIN HOPPER 5-038B (C-3)
TO FLOOR DRAIN
SLUICE WATER FROM REGENERATION WATER PUMPS 038B-3 (F-5)
CONDENSING SYSTEM 7-020 (E-8)
CONDENSATE POLISHER RECYCLE PUMPS
2FWD-P-1A(M10)
2FWD-P-1B(M11)
(2000 GPM @ 30FT)
NOTES: SYSTEM CODE IS FWD UNLESS NOTED
ALL VALVES ARE SERIES 2FWD-XX-0000 UNLESS NOTED
LAST VALVE NUMBER: 2FWD-BV-0320
LAST CONNECTION NUMBER: 7
DWP REVISIONS
NO DESCRIPTION
5 EIS 69-55-89-40:PM7 (10-D) ADDED EXHAUSTED RESIN TRANSFER LINE RELIEF PPG.
Revision Number 5
DRAFTING RELEASE
DRAWN BY H. CARRAJAL
CHECKED BY N. Kimura
ENGINEERING APPROVAL
OWNER/AGENT APPROVAL
DRAWING REVISION RELEASE APPROVAL
FINAL APPROVAL RELEASE SIGNATURE DATE
4 07-01-87 CONFORMED TO CONSTRUCTION RECORDS JRS
3 05-10-85 ISSUED TO CONTRACTORS 72.0202, 72.0403 JRS
3 05-10-85 APPROVED FOR CONSTRUCTION, SPEC 74.0202 JRS
2 04-30-85 ISSUED TO CONTRACTORS 72.0202, 72.0403 JRS
1 09-14-84 RELEASED FOR CONSTRUCTION, SPECS 72.0202 & 72.0403 JRS
0 03-09-84 ISSUED FOR BIDS, SPEC 74.0403 JRS
0 02-24-84 ISSUED FOR BIDS, SPEC 72.0202 JRS
NO. DATE REVISIONS AND RECORD OF ISSUE BY CHK APP FLM
3 05-10-85 APPROVED FOR CONSTRUCTION, SPEC 74.0202 JRS DGC CHF
2 04-30-85 GENERAL REVISIONS JRS RRH CHF
1 09-14-84 RELEASE FOR CONSTRUCTION, SPEC 72.0202 & 72.0403 JRS RRH CHF
0 02-24-84 INITIAL ISSUE JRS RRH CHF
4 07-01-87 CONFORMED TO CONSTRUCTION RECORDS
I HEREBY CERTIFY THAT THIS DOCUMENT WAS PREPARED BY ME OR UNDER MY DIRECT SUPERVISION AND THAT I AM A DULY REGISTERED PROFESSIONAL ENGINEER UNDER THE LAWS OF THE STATE OBTAH
SIGNED Charles H. Fritz
DATE 02-24-84 REG NO. 5575
BLACK & VEATCH CONSULTING ENGINEERS
ENGINEER T.L. STOUT DRAWN AGG
CHECKED DGC DATE 05-10-85
INTERMOUNTAIN POWER PROJECT
PIPING AND INSTRUMENT DIAGRAM
CONDENSATE POLISHING
PROJECT 9255 DRAWING NUMBER 2FWD-M2038A REV 5
CODE FWD 52.3404
AREA
A00008527
5-M920108
9255-2FWD-M2038A
10/22/87 06:28:14 ATSSK

IP7016727

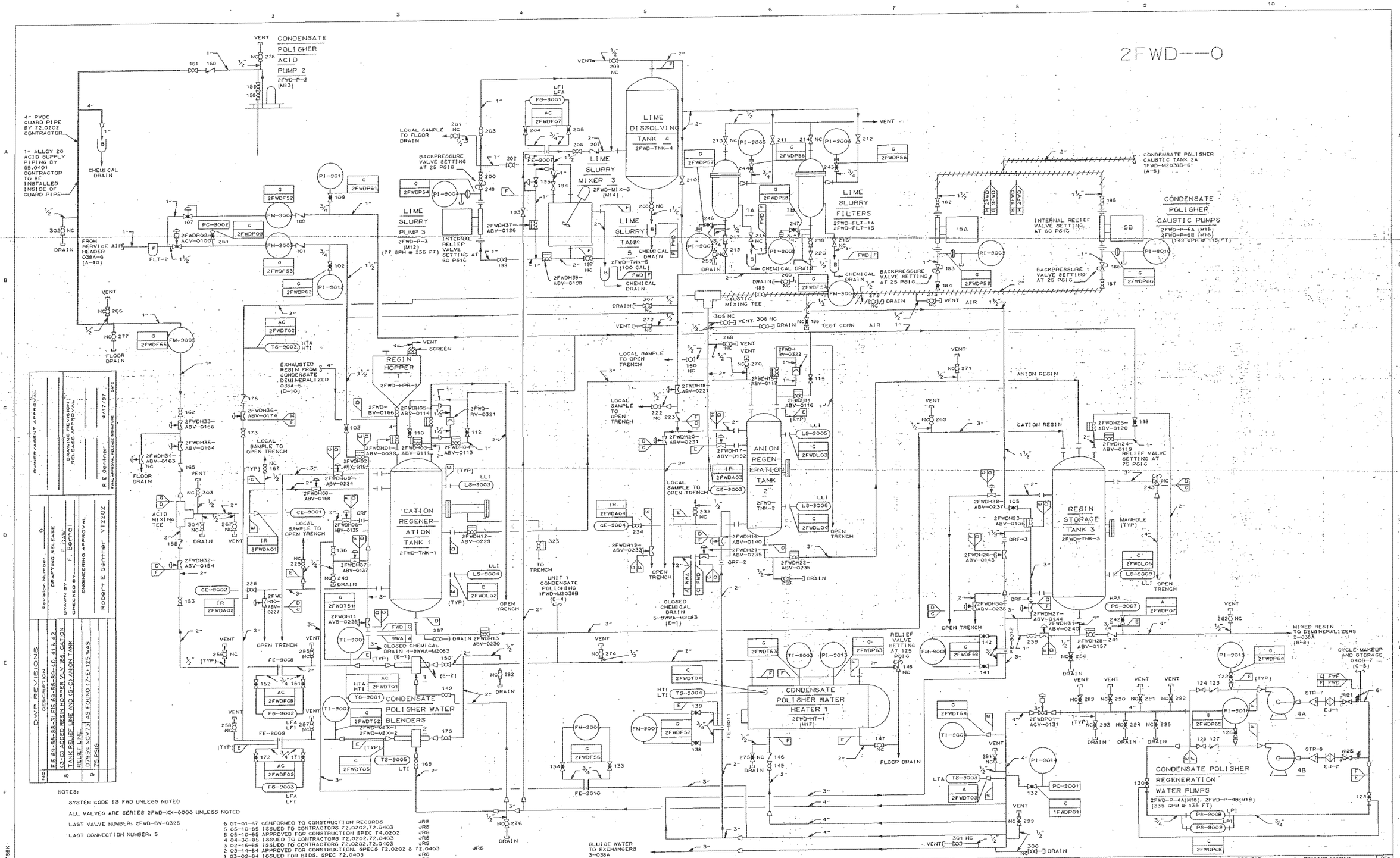

NOTES:

SYSTEM CODE IS FWD UNLESS NOTED

ALL VALVES ARE SERIES 2FWD-XX-0000 UNLESS NOTED

LAST VALVE NUMBER: 2FWD-BV-0325

LAST CONNECTION NUMBER: 5

6	07-01-87	CONFORMED TO CONSTRUCTION RECORDS
5	05-10-85	APPROVED FOR CONSTRUCTION SPEC 74.0202
4	04-30-85	GENERAL REVISIONS
3	02-15-85	GENERAL REVISIONS
2	09-14-84	APPROVED FOR CONSTRUCTION. SPEC 72.0202 & 72.0403
1	03-09-84	GENERAL REVISIONS
0	02-24-84	INITIAL ISSUE

REVISIONS AND RECORD OF ISSUE

7-M920104 8-M920108 9-M970069

I HEREBY CERTIFY THAT THIS DOCUMENT WAS PREPARED BY ME OR UNDER MY DIRECT SUPERVISION AND THAT I AM A DULY REGISTERED PROFESSIONAL ENGINEER UNDER THE LAWS OF THE STATE OBTAIN

SIGNED Charles H. Fr

DATE 02-24-84 REG NO. 5575

BLACK & VEATCH CONSULTING ENGINEERS

ENGINEER TLS DRAWN AGG

CHECKED RRH DATE 09-14-84

IPP INTERMOUNTAIN POWER PROJECT

PIPING AND INSTRUMENT DIAGRAM
CONDENSATE POLISHING

PROJECT 9255 — DRAWING NUMBER 2FWD-M2038B REV 9

CODE FWD 52.3404

AREA A00008528

9255-2FWD-M2038B
MPD
10/22/87 02:41:53 ATSSK

4-10-97

IP7016728

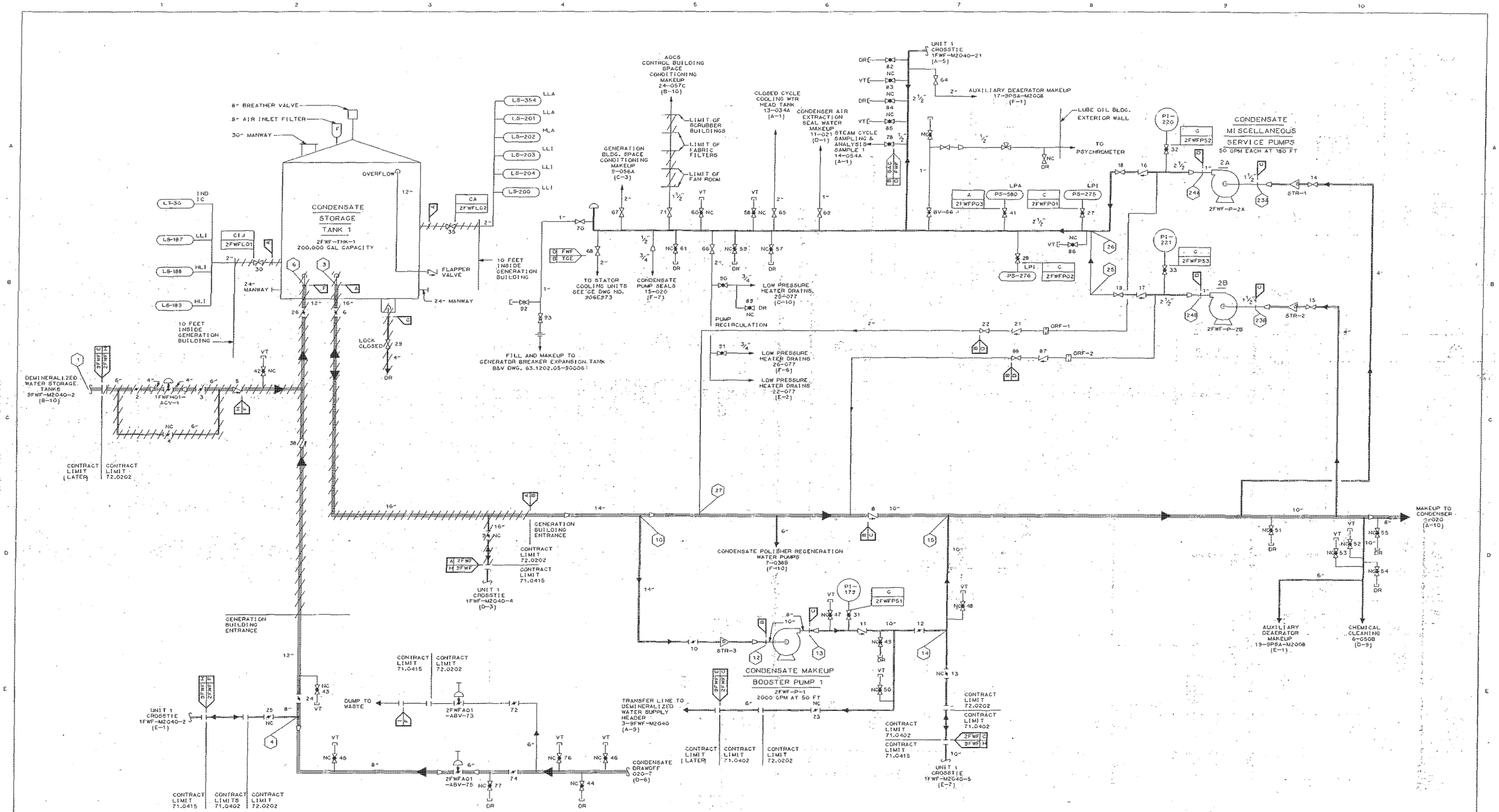

NOTES:

SYSTEM CODE IS 1FWF UNLESS NOTED

ALL VALVES ARE SERIES 1FWF-XX-0000

LAST VALVE NUMBER IS 2FWF-XX-0091

LAST CONNECTION NUMBER IS 26

DWP REVISIONS			
NO.	DESCRIPTION		
CONT. 10	TRACING TO 1½" LINE.		
	16891-7; AS BUILT (7,8-A) ADD LINE TO		
	PSYCHROMETER.		

DWP REVISIONS			
NO	DESCRIPTION		
7	AS-BUILT:CMP 522 (4-B) REPLACED CARBON		
	STL FILL & MAKE-UP LINE WITH SST AND		
	ADDED SAMP CONN.		
8	AS-BUILT:CMP 522 (4-B) ADDED VALVE		
	NUMBERS 92 & 93.		
9	DAN 131:(AS-BUILT (5-A) ADDED HEAT		

Revision Number 10

DRAFTING RELEASE
DRAWN BY H. CARBAJAL
CHECKED BY K. Koito

ENGINEERING APPROVAL

OWNER/AGENT APPROVAL

DRAWING REVISION RELEASE APPROVAL

FINAL APPROVAL RELEASE SIGNATURE DATE

6	07-01-87	CONFORMED TO CONSTRUCTION RECORDS	GTB
5	03-17-86	ISSUED TO CONTRS – 72.0202,72.0403,74.0201	PCB
4	08-09-85	ISSUED TO CONTRS – 72.0202,72.0403,74.0201	NJA
3	05-10-85	APPROVED FOR CONSTRUCTION SPEC 74.0201	DLS
3	05-10-85	ISSUED TO CONTRACTORS – 72.0202,72.0403	BDM
2	09-14-84	APPROVED FOR CONSTRUCTION – SPECS 72.0202 & 72.0403	BDM
1	05-04-84	ISSUED FOR ADDENDUM 1 – SPEC 72.0202	BDM
0	03-09-84	ISSUED FOR BID – SPEC 72.0403	BDM
0	02-24-84	ISSUED FOR BID – SPEC 72.0201	LJS

					3	05-10-85	APPROVED FOR CONSTRUCTION SPEC 74.0201	DLS	LJS	HLJ
					2	09-14-84	APPROVED FOR CONSTRUCTION – SPECS 72.0202 & 72.0403	BDM	LJS	HLJ
6	07-01-87	CONFORMED TO CONSTRUCTION RECORDS	GTB	MJC	1	05-04-84	GENERAL REVISIONS	BDM		HLJ
5	03-17-86	ADDED VENT	PCB	NJA	0	02-24-84	INITIAL ISSUE	BDM		HLJ
4	08-09-85	GENERAL REVISIONS	NJA	LJS	NO.	DATE	REVISIONS AND RECORD OF ISSUE	BY	CHK	APPR

I HEREBY CERTIFY THAT THIS DOCUMENT WAS PREPARED BY ME OR UNDER MY DIRECT SUPERVISION AND THAT I AM A DULY REGISTERED PROFESSIONAL ENGINEER UNDER THE LAWS OF THE STATE OF UTAH

SIGNED Hobart Lee Jacobs

DATE 02-24-84 REG NO. 5746

BLACK & VEATCH CONSULTING ENGINEERS

ENGINEER BDM DRAWN AGG

CHECKED LJS DATE 09-07-84

IPP INTERMOUNTAIN POWER PROJECT

PIPING AND INSTRUMENT DIAGRAM
CYCLE MAKEUP AND STORAGE

PROJECT 9255 – DRAWING NUMBER 2FWF-M2040 REV 10

CODE FWF-52.3406

AREA

A00006651

7-M850133 8-M900070 9-M900248 10-M940216

9255-2FWF-M2040
M2PD1
10/22/87 06:58:10 ATSSK

IP7016729

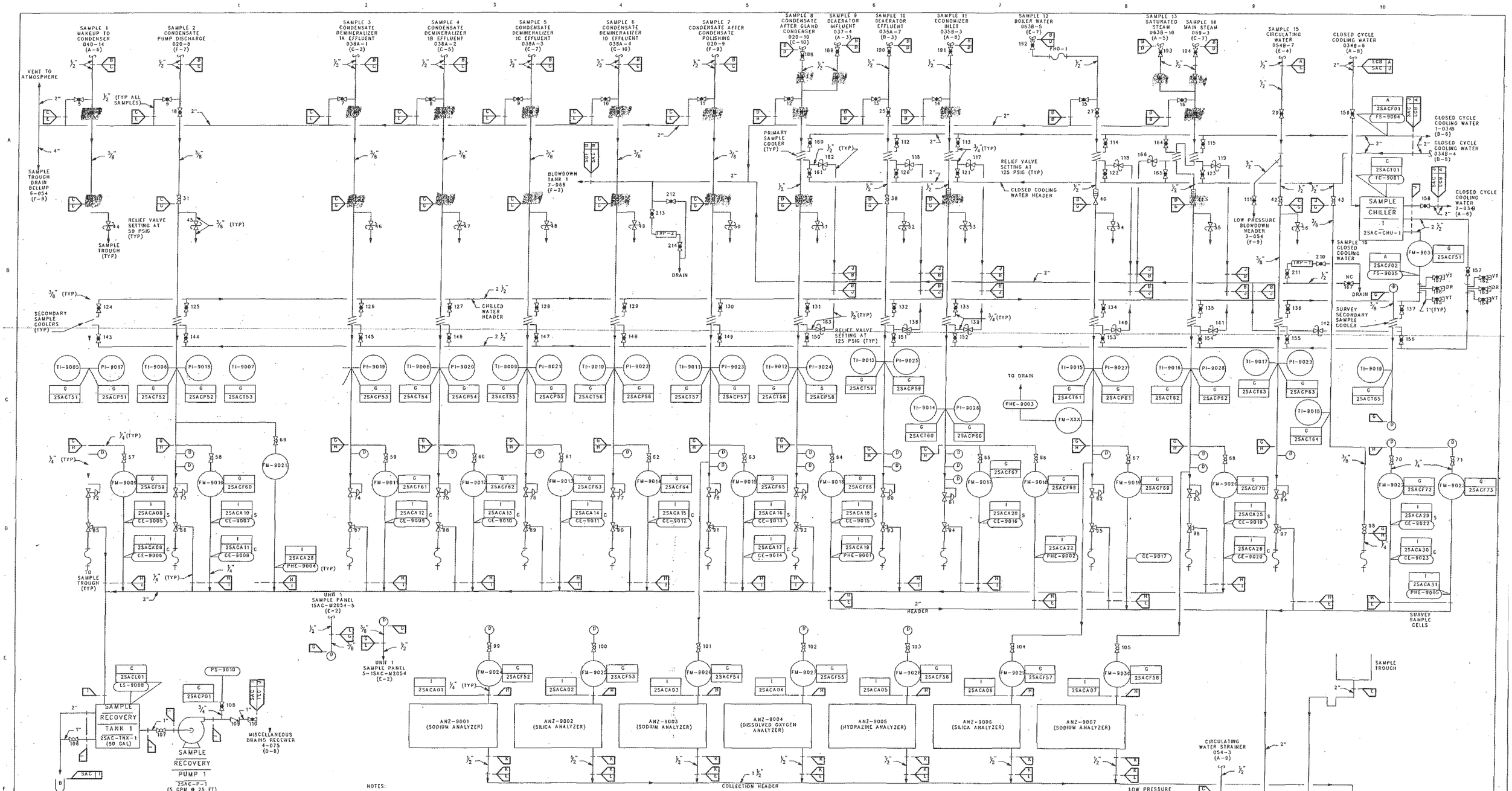

NOTES:

SYSTEM CODE IS 2SAC UNLESS NOTED

ALL VALVES ARE SERIES 2SAC-XX-0000 UNLESS NOTED

LAST VALVE NUMBER: 2SAC-BV-0194

LAST CONNECTION NUMBER: 7

CONDUCTIVITY CELL DESIGNATIONS:

"C"-CATION CONDUCTIVITY
"S"-SPECIFIC CONDUCTANCE

2SAC--0

IPSC REVISIONS				
NO.	DESCRIPTION	BY	CHK	APP
7	WO 00-1048-4 (1-D) RELOCATED FM-9021, (9-D)	LL	JKH	JKH
	RELOCATED CE-9017 (10-D) DELEATED CE-9021 &			
	9024, SAMPLE PT 15 IS NOT USED			

NO	DATE	REVISIONS AND RECORD OF ISSUE	BY	CHK	APP	FLM
3	07-01-87	CONFORMED TO CONSTRUCTION RECORDS				
2	05-10-85	APPROVED FOR CONSTRUCTION, SPEC 74.0202	JRS	DCG	CHF	
1	09-14-84	RELEASED FOR CONSTRUCTION, SPECS 72.0202 & 72.0403	JRS		CHF	
0	02-24-84	INITIAL ISSUE	JRS		CHF	

3	07-01-87	CONFORMED TO CONSTRUCTION RECORDS	JRS
2	05-10-85	ISSUED TO CONTRACTORS, SPECS 72.0202 & 72.0403	JRS
2	05-10-85	APPROVED FOR CONSTRUCTION, SPEC 74.0202	JRS
1	09-14-84	RELEASED FOR CONSTRUCTION, SPECS 72.0202 & 72.0403	JRS
0	02-24-84	ISSUED FOR BIDS, SPEC 72.0202	JRS

I HEREBY CERTIFY THAT THIS DOCUMENT WAS PREPARED BY ME OR UNDER MY DIRECT SUPERVISION AND THAT I AM A DULY REGISTERED PROFESSIONAL ENGINEER UNDER THE LAWS OF THE STATE OF UTAH

SIGNED Charles H. Fritz

DATE 02-24-84 REG NO. 5575

BLACK & VEATCH CONSULTING ENGINEERS

ENGINEER TLS DRAWN AGG

CHECKED DCG DATE 05-10-85

IPP INTERMOUNTAIN POWER PROJECT

PIPING AND INSTRUMENT DIAGRAM
STEAM CYCLE SAMPLING AND ANALYSIS

PROJECT 9255 DRAWING NUMBER 2SAC-M2054A REV 7

CODE SAC-52.5203

AREA

A00008529

4-M890440 5-M930056 6-M860009

A00008529.DGN

9255-2SAC-M2054A
M2P01 10/22/87 06:01:19

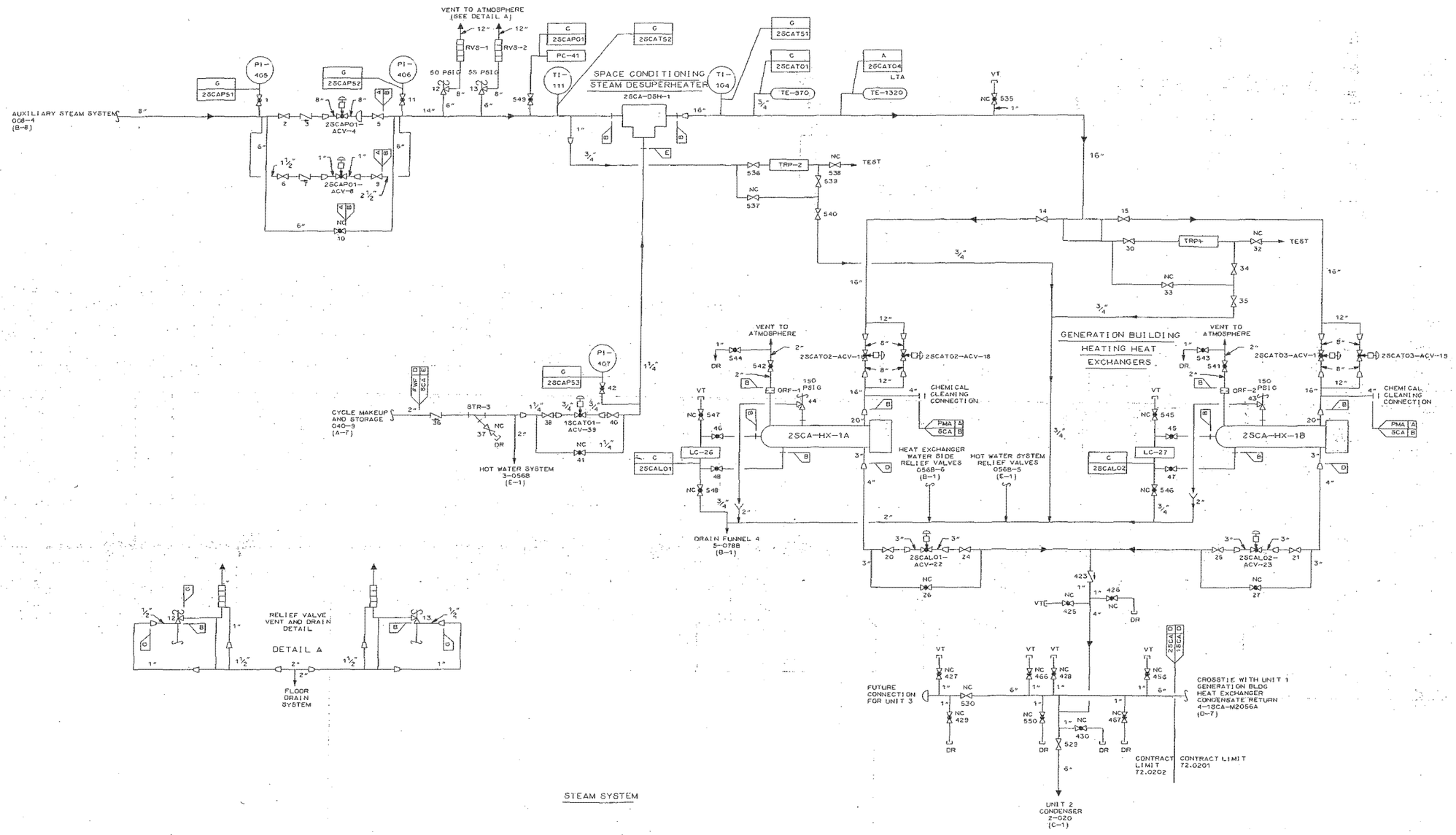

STEAM SYSTEM

NOTES:

1. SYSTEM CODE IS 2SCA UNLESS OTHERWISE NOTED.
2. ALL VALVES ON THIS DRAWING ARE SERIES 2SCA-XXX-0000.
3. HOT WATER SIDE OF HEAT EXCHANGES HX-1A AND HX-1B SHOWN ON P&ID M2056B.
4. INSTRUMENT,TRAP,TEST, AND DRAIN LINES SHALL BE 3/4 INCH UNLESS OTHERWISE NOTED.
5. LAST VALVE NUMBER: 2SCA-XXX-0556
6. LAST CONNECTION NUMBER: 5

6	07-01-87	CONFORMED TO CONSTRUCTION RECORDS GTB
5	02-17-86	ISSUED TO CONSTRUCTOR SPEC. PCB 72.0202,72.0403,74.0201
4	08-21-85	ISSUED TO CONTRACTOR, SPEC. 72.0202,72.0403,74.0201 DLS
3	05-10-85	APPROVED FOR CONSTRUCTION SPEC. 74.0201 DLS
3	05-10-85	ISSUED TO CONTRACTOR, 72.0202 AND 72.0403 DLS
2	09-14-84	APPROVED FOR CONSTRUCTION 72.0202 AND 72.0403 RDR
1	05-04-84	ISSUED FOR ADDENDUM 1 SPEC. 72.0202 RDR
0	03-09-84	ISSUED FOR BID SPEC 72.0403 RDR
0	02-24-84	ISSUED FOR BID SPEC 72.0202 RDR

NO.	DATE	REVISIONS AND RECORD OF ISSUE	BY	CHK	APP	FLM
6	07-01-87	CONFORMED TO CONSTRUCTION RECORDS				
5	02-17-86	REVISED RELIEF VALVE VENT & DRAIN ARRANGEMENT	PCB	DLS	HLJ	
4	08-21-85	GENERAL REVISIONS	DLS	LJS	HLJ	
3	05-10-85	APPROVED FOR CONSTRUCTION, 74.0201	DLS	LJS	HLJ	
2	09-14-84	APPROVED FOR CONSTRUCTION, 72.0202,72.0403	RDR	RGJ	HLJ	
1	05-04-84	GENERAL REVISIONS	RDR		HLJ	
0	02-24-84	INITIAL ISSUE	RDR		HLJ	

I HEREBY CERTIFY THAT THIS DOCUMENT WAS PREPARED BY ME OR UNDER MY DIRECT SUPERVISION AND THAT I AM A DULY REGISTERED PROFESSIONAL ENGINEER UNDER THE LAWS OF THE STATE OBTAH

SIGNED

DATE 02-24-84 REG NO. 5746

BLACK & VEATCH CONSULTING ENGINEERS

ENGINEER RDR DRAWN AGG

CHECKED RGJ DATE 09-07-84

IPP INTERMOUNTAIN POWER PROJECT

PIPING AND INSTRUMENT DIAGRAM
GENERATION BUILDING SPACE CONDITIONING

PROJECT 9255 DRAWING NUMBER 2SCA-M2056A REV. 6

CODE 5CA-52.5601

AREA

9255-2SCA-M2056A
MPD
10/22/87 06:13:20 ATBSK

IP7016731

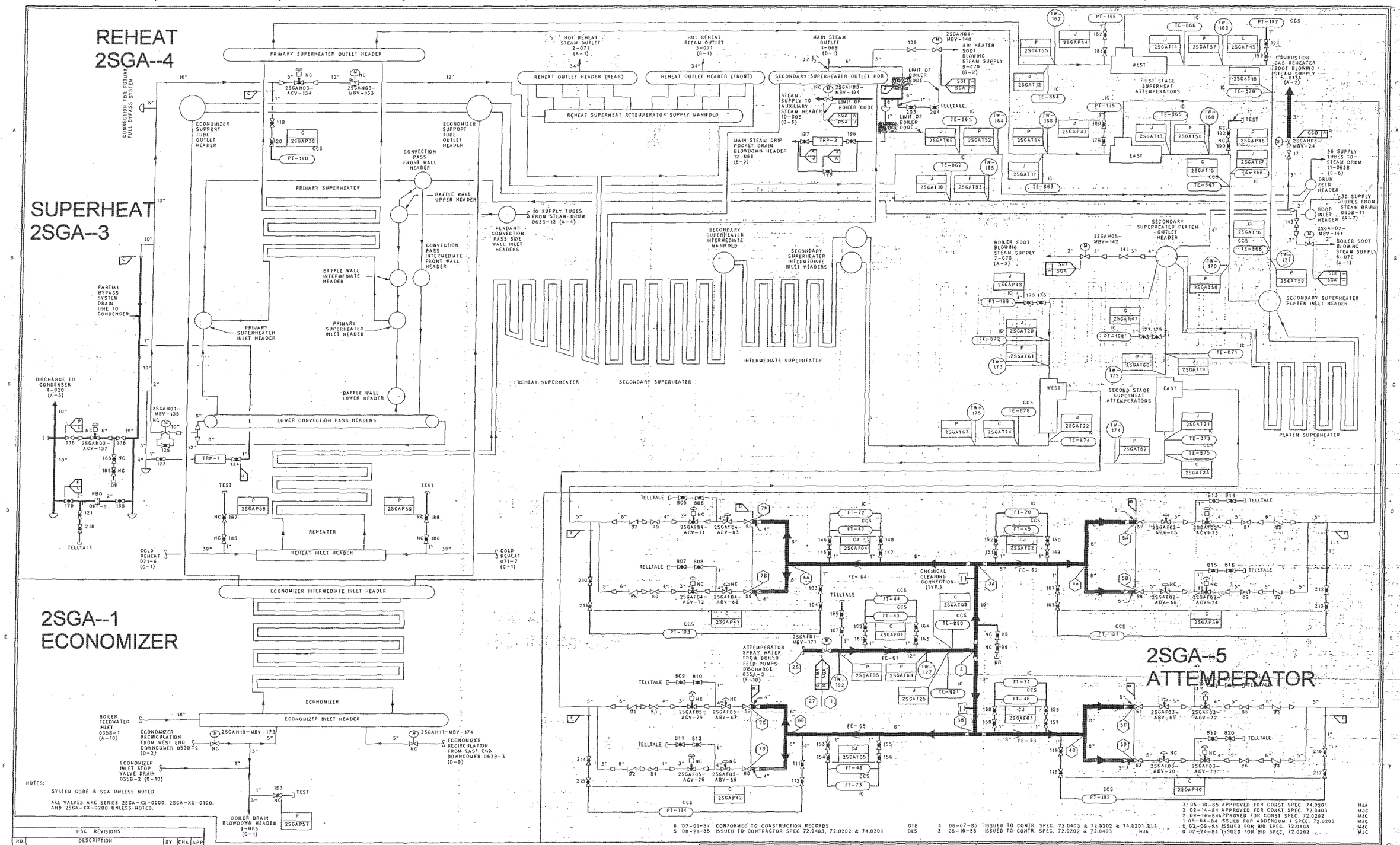
REHEAT
2SGA--4
SUPERHEAT
2SGA--3
2SGA--1
ECONOMIZER
2SGA--5
ATTEMPERATOR
PRIMARY SUPERHEATER OUTLET HEADER
REHEAT OUTLET HEADER (REAR)
REHEAT OUTLET HEADER (FRONT)
SECONDARY SUPERHEATER OUTLET HDR
REHEAT SUPERHEAT ATTEMPERATOR SUPPLY MANIFOLD
PRIMARY SUPERHEATER
REHEATER
REHEAT INLET HEADER
LOWER CONVECTION PASS HEADERS
ECONOMIZER
ECONOMIZER INLET HEADER
ECONOMIZER INTERMEDIATE INLET HEADER
REHEAT SUPERHEATER
SECONDARY SUPERHEATER
INTERMEDIATE SUPERHEATER
PLATEN SUPERHEATER
FIRST STAGE SUPERHEAT ATTEMPERATORS
SECOND STAGE SUPERHEAT ATTEMPERATORS
WEST
EAST
CHEMICAL CLEANING CONNECTION (TYP.)
NOTES:
SYSTEM CODE IS SGA UNLESS NOTED
ALL VALVES ARE SERIES 2SGA-XX-0000, 2SGA-XX-0100, AND 2SGA-XX-0200 UNLESS NOTED.
IPSC REVISIONS
NO. DESCRIPTION BY CHK APP
7 IGS98-6 DEW PE #166870 6-21-00 DEW JHN
ADDED TELL-TALE DRAINS (5-D&F) (10-D&F)
6 07-01-87 CONFORMED TO CONSTRUCTION RECORDS GTB
5 08-21-85 ISSUED TO CONTRACTOR SPEC 72.0403, 72.0202 & 74.0201
4 06-07-85 ISSUED TO CONTR. SPEC. 72.0403 & 72.0202 & 74.0201 DLS
3 05-10-85 ISSUED TO CONTR. SPEC. 72.0202 & 72.0403 NJA
3 05-10-85 APPROVED FOR CONST SPEC. 74.0201 NJA
2 09-14-84 APPROVED FOR CONST SPEC. 72.0403 MJC
2 09-14-84 APPROVED FOR CONST SPEC. 72.0202 MJC
1 05-04-84 ISSUED FOR ADDENDUM 1 SPEC. 72.0202 MJC
0 03-09-84 ISSUED FOR BID SPEC. 72.0403 MJC
0 02-24-84 ISSUED FOR BID SPEC. 72.0202 MJC
I HEREBY CERTIFY THAT THIS DOCUMENT WAS PREPARED BY ME OR UNDER MY DIRECT SUPERVISION AND THAT I AM A DULY REGISTERED PROFESSIONAL ENGINEER UNDER THE LAWS OF THE STATE OF UTAH
SIGNED Hobart Lee Jacobs
DATE 02-24-84 REG NO. 5746
BLACK & VEATCH CONSULTING ENGINEERS
ENGINEER MJC DRAWN AGG
CHECKED CL KLING DATE 09-07-84
IPP INTERMOUNTAIN POWER PROJECT
PIPING AND INSTRUMENT DIAGRAM
STEAM GENERATOR
PROJECT 9255
DRAWING NUMBER 2SGA-M2063A
REV 7
CODE SGA-52.5801
AREA
A00007451
6-21-00

IP7016732

2SGA--2
DRUM, WATERWALLS, AND BOILER CASING

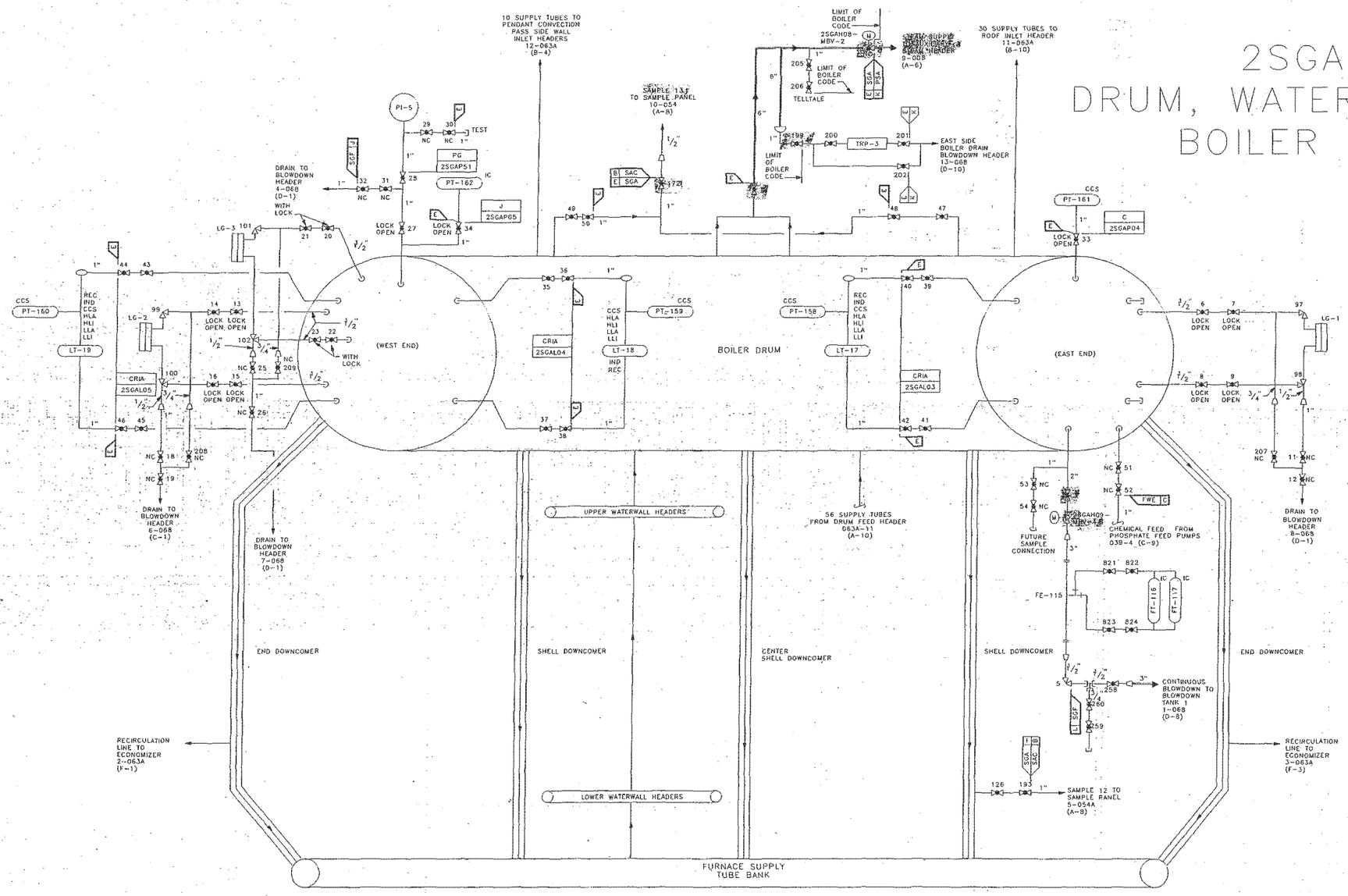

NOTES:

SYSTEM CODE IS SGA UNLESS NOTED

VALVES ARE SERIES 2SGA-XX-0000, 2SGA-XX-0100, AND 2SGA-XX-0200 UNLESS NOTED.

LAST VALVE NUMBER: 2SGA-XX-0099, 2SGA-XX-0199, 2SGA-XX-0218

LAST CONNECTION NUMBER: 13

IPSC REVISIONS				
NO.	DESCRIPTION	BY	CHK	APP
10	WO#98-13571 DEW PC #166870 11-19-98 (7,C) CHANGED MBV-4 TO A BALL VALVE	DEW	DEW	JHN
11	WO#96-33338 DEW PC #166870 11-30-98 (7,C) ADDED FE-115, FT-116 & FT-117	DEW	DEW	JHN

DWP REVISIONS	
NO.	DESCRIPTION
6	CMP126;AS BUILT (4,5-B,C) MOVED LEVEL XMTR 18 PPG FROM E. SIDE OF DRUM TO W. SIDE
7	06-05-89 CMP2C649 ADDED ISOLATION FOR CONTINUOUS BLOWDOWN VALVE C.E. FINNEGAN
8	CMP 2C649; AS BUILT ADDED VALVE NUMBERS 258, 259 & 260.
9	IPSC W.O. 93-99036 ADDED VALVE NUMBERS 35, 36, 37 & 38

Revision Number 9

DRAFTING RELEASE

DRAWN BY E. GAW

CHECKED BY N. Kimuro

ENGINEERING APPROVAL

OWNER/AGENT APPROVAL

DRAWING REVISION RELEASE APPROVAL

FINAL APPROVAL RELEASE AS ONATURE DATE

5	07-01-87	CONFORMED TO CONSTRUCTION RECORDS									GTB
4	08-21-85	GENERAL REVISIONS	DLS	CLK	HLJ						DLS
						3	05-10-85	APPROVED FOR CONSTRUCTION SPEC. 74.0201	NJA	CLK	HLJ
						2	09-14-84	APPROVED FOR CONSTRUCTION SPEC. 72.0202 AND 72.0403	MJC	CLK	HLJ
						1	05-04-84	GENERAL REVISIONS	MJC		HLJ
						0	02-24-84	INITIAL ISSUE	MJC		HLJ
						NO.	DATE	REVISIONS AND RECORD OF ISSUE	BY	CHK	APP

FLM

8-M900299 8-M930202, 9-M950073

I HEREBY CERTIFY THAT THIS DOCUMENT WAS PREPARED BY ME OR UNDER MY DIRECT SUPERVISION AND THAT I AM A DULY REGISTERED PROFESSIONAL ENGINEER UNDER THE LAWS OF THE STATE OF UTAH

SIGNED Hobart Lee Jacob

DATE 02-24-84 REG NO. 5746

BLACK & VEATCH CONSULTING ENGINEERS

ENGINEER MJC DRAWN AGG

CHECKED CLK DATE 09-07-84

IPP INTERMOUNTAIN POWER PROJECT

PIPING AND INSTRUMENT DIAGRAM
STEAM GENERATOR

PROJECT 9255 DRAWING NUMBER - 2SGA-M2063B REV 11

CODE SGA-52.5801

AREA

A00007452

11-30-98

IP7016733

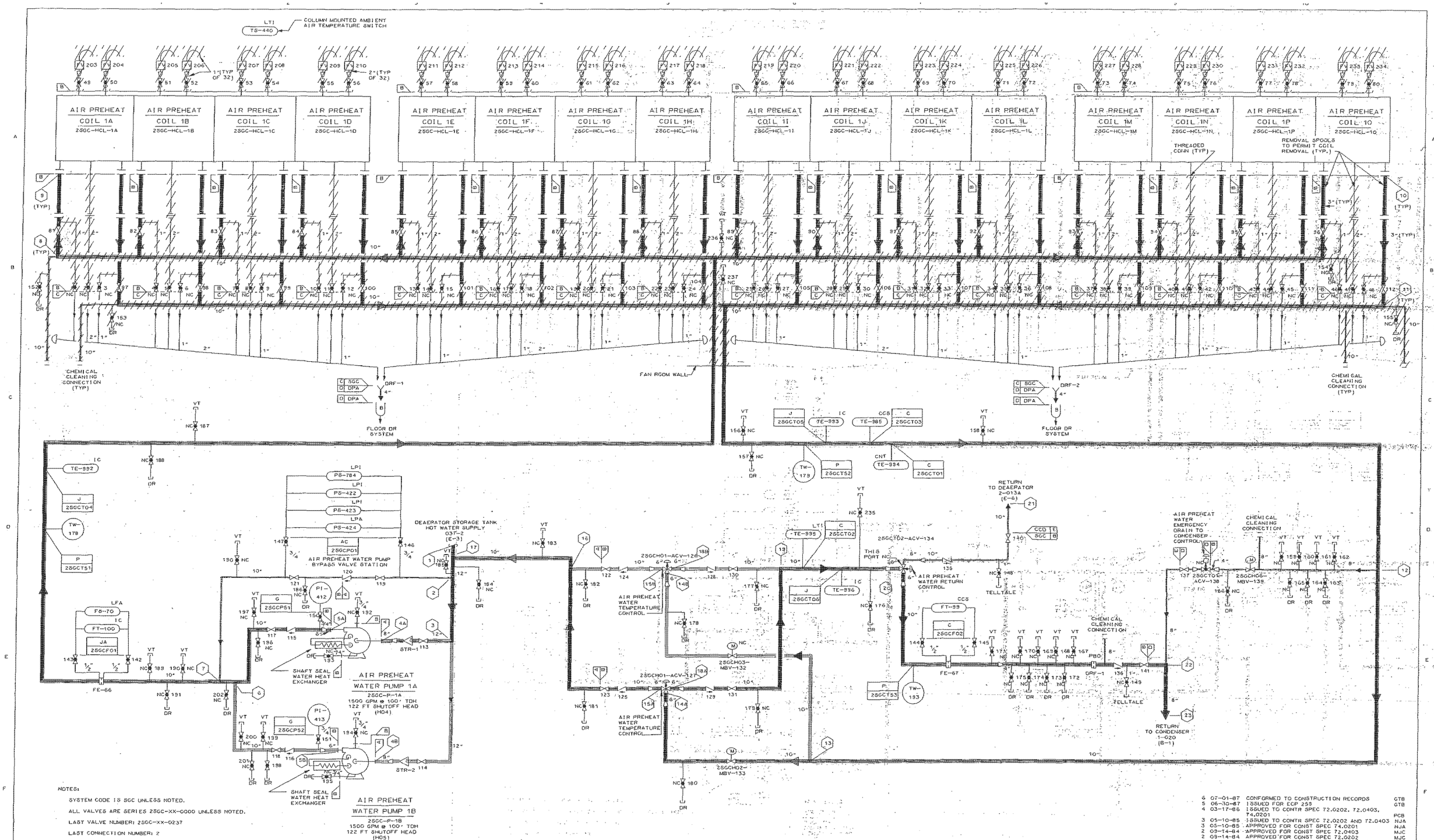

NOTES:

SYSTEM CODE IS SGC UNLESS NOTED.

ALL VALVES ARE SERIES 2SGC-XX-0000 UNLESS NOTED.

LAST VALVE NUMBER: 2SGC-XX-0237

LAST CONNECTION NUMBER: 2

REV	DATE	REVISIONS AND RECORD OF ISSUE	BY	CHK	APP	FLM
6	07-01-87	CONFORMED TO CONSTRUCTION RECORDS	GTB			
5	06-30-87	ISSUED FOR ECP 259	GTB	MJC	HL	J
4	03-17-86	REVISED FREEZE PROTECTION	PCB	CLK	HL	J
3	05-10-85	APPROVED FOR CONSTRUCTION SPEC 74.0201	NJA	CLK	HL	J
2	09-14-84	APPROVED FOR CONSTRUCTION SPEC 72.0202 AND 72.0403	MJC	CLK	HL	J
1	04-13-84	GENERAL REVISIONS	MJC		HL	J
0	02-24-84	INITIAL ISSUE	MJC		HL	J

I HEREBY CERTIFY THAT THIS DOCUMENT WAS PREPARED BY ME OR UNDER MY DIRECT SUPERVISION AND THAT I AM A DULY REGISTERED PROFESSIONAL ENGINEER UNDER THE LAWS OF THE STATE OBTAIN

SIGNED

DATE 02-24-84 REG NO. 5746

BLACK & VEATCH CONSULTING ENGINEERS

ENGINEER MJC DRAWN AGG

CHECKED C L KLING DATE 09-07-84

IPP INTERMOUNTAIN POWER PROJECT

PIPING AND INSTRUMENT DIAGRAM
AIR PREHEAT

PROJECT 9255 — DRAWING NUMBER 2SGC-M2065 REV 6

CODE SGC-52.5803

AREA

REV	DATE	REVISIONS AND RECORD OF ISSUE	BY	CHK	APP	FLM
6	07-01-87	CONFORMED TO CONSTRUCTION RECORDS	GTB			
5	06-30-87	ISSUED FOR ECP 259	GTB	MJC	HL	J
4	03-17-86	REVISED FREEZE PROTECTION	PCB	CLK	HL	J
3	05-10-85	APPROVED FOR CONSTRUCTION SPEC 74.0201	NJA	CLK	HL	J
2	09-14-84	APPROVED FOR CONSTRUCTION SPEC 72.0202 AND 72.0403	MJC	CLK	HL	J
1	04-13-84	GENERAL REVISIONS	MJC		HL	J
0	02-24-84	INITIAL ISSUE	MJC		HL	J

9255-2SGC-M2065
2SGD
10/22/87 05:56:23 ATSSK

IP7016734

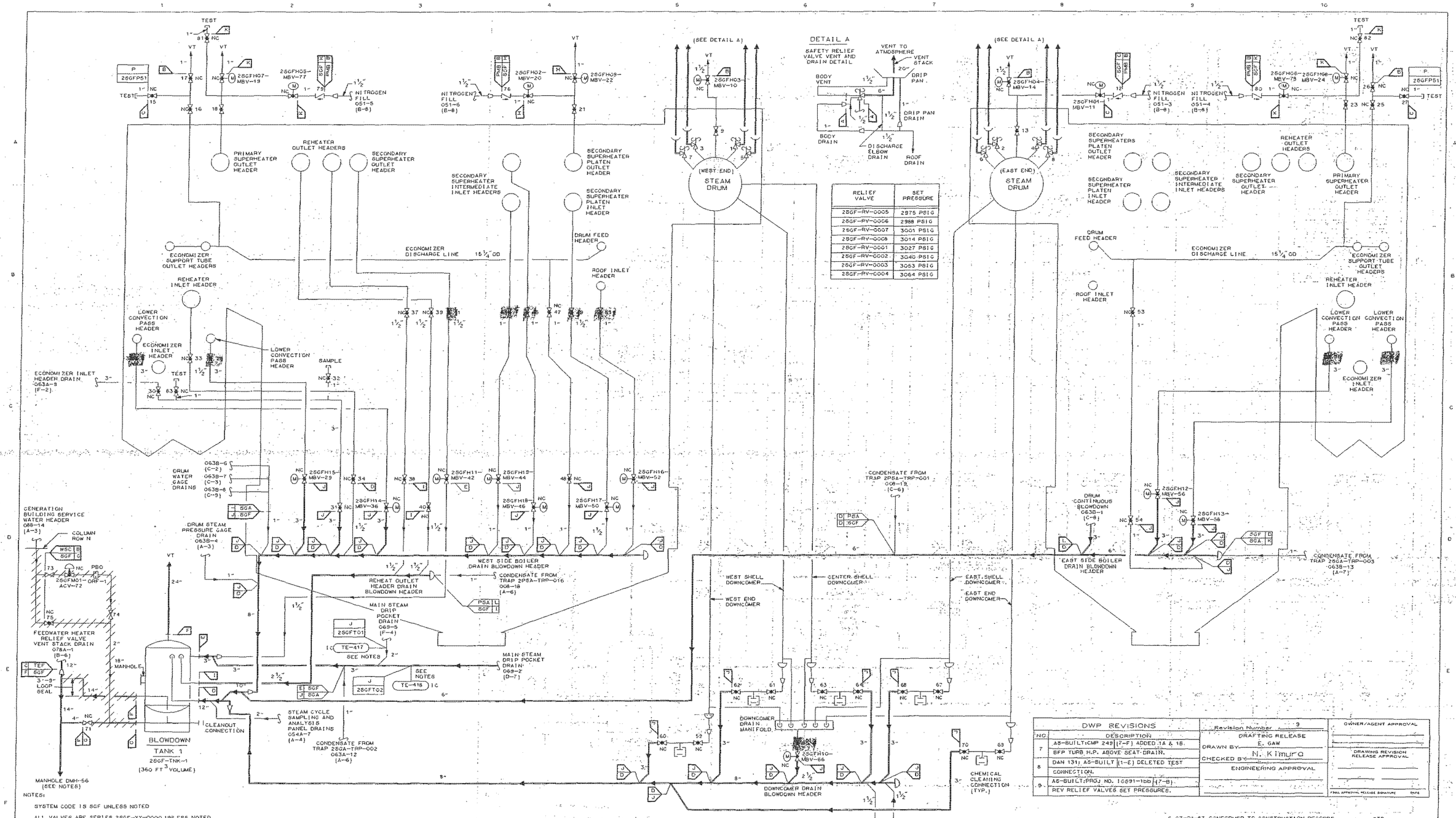

RELIEF VALVE	SET PRESSURE
2SGF-RV-0005	2975 PSIG
2SGF-RV-0006	2988 PSIG
2SGF-RV-0007	3001 PSIG
2SGF-RV-0008	3014 PSIG
2SGF-RV-0001	3027 PSIG
2SGF-RV-0002	3040 PSIG
2SGF-RV-0003	3053 PSIG
2SGF-RV-0004	3064 PSIG

NOTES:

SYSTEM CODE IS SGF UNLESS NOTED

ALL VALVES ARE SERIES 2SGF-XX-0000 UNLESS NOTED

LAST VALVE NUMBER: 2SGF-XX-0083

MANHOLE DMH-56 IS SHOWN ON B&V DWG 9255-9STU-83308.
MANHOLE DMH-56 IS PART OF THE PLANT DRAIN SYSTEM WHICH DISCHARGES TO THE SETTLING BASIN.

TE-417 AND TE-418 ARE CLAMP ON TEMPERATURE ELEMENTS

AT EACH END OF THE STEAM DRUM THE RELIEF VALVE DRAINS ARE TIED TOGETHER INTO A COMMON HEADER AND RUN TO THE ROOF DRAIN SYSTEM

DWP REVISIONS		
NO.	DESCRIPTION	
7	AS-BUILT;CMP 249 (7-F) ADDED 1A & 1B.	
	BFP TURB. H.P. ABOVE SEAT DRAIN.	
8	DAN 131; AS-BUILT (1-E) DELETED TEST	
	CONNECTION.	
9	AS-BUILT;PROJ NO. 16691-1bb (7-B).	
	REV RELIEF VALVES SET PRESSURES.	

Revision Number 9
DRAFTING RELEASE
DRAWN BY E. GAW
CHECKED BY N. Kimura
ENGINEERING APPROVAL
OWNER/AGENT APPROVAL
DRAWING REVISION RELEASE APPROVAL
FINAL APPROVAL RELEASE SIGNATURE DATE

NO.	DATE	REVISIONS AND RECORD OF ISSUE	BY	CHK	APPR	LM
6	07-01-87	CONFORMED TO CONSTRUCTION RECORDS	GTB	MJC	HLJ	
5	03-17-86	ADDED HEAT TRACING	PCB	CLK	HLJ	
4	08-21-85	GENERAL REVISIONS	DLS	CLK	HLJ	
3	05-10-85	APPROVED FOR CONST. SPEC. 74.0201	NJA	CLK	HLJ	
2	03-14-84	APPROVED FOR CONSTRUCTION SPEC. 72.0202 AND 72.0403	MJC	CLK	HLJ	
1	05-04-84	GENERAL REVISIONS	MJC		HLJ	
0	02-24-84	INITIAL ISSUE	MJC		HLJ	

6 07-01-87 CONFORMED TO CONSTRUCTION RECORDS GTB
5 03-17-86 ISSUED TO CONTRACTOR SPEC. 72.0202,72.0403, AND 74.0201 PCB
4 08-21-85 ISSUED TO CONTRACTOR SPEC. 72.0202,72.0403, AND 74.0201 DLS
3 05-10-85 ISSUED TO CONTR. SPEC. 72.0202 & 72.0403 NJA
3 05-10-85 APPROVED FOR CONST. SPEC. 74.0201 NJA
2 03-14-84 APPROVED FOR CONST. SPEC. 72.0202 & 72.0403 MJC
1 05-04-84 ISSUED FOR ADDENDUM 1 SPEC. 72.0202 MJC
0 03-02-84 ISSUED FOR BID SPEC. 72.0403 MJC
0 02-24-84 ISSUED FOR BID SPEC. 72.0202 MJC

I HEREBY CERTIFY THAT THIS DOCUMENT WAS PREPARED BY ME OR UNDER MY DIRECT SUPERVISION AND THAT I AM A DULY REGISTERED PROFESSIONAL ENGINEER UNDER THE LAWS OF THE STATE OBTAH
SIGNED Hobart Lee Jacobs
DATE 02-24-84 REG NO. 5746

BLACK & VEATCH CONSULTING ENGINEERS
ENGINEER MJC DRAWN AGG
CHECKED CLK DATE 09-07-84

IPP INTERMOUNTAIN POWER PROJECT

PIPING AND INSTRUMENT DIAGRAM
BOILER VENTS AND DRAINS

PROJECT 9255 — DRAWING NUMBER 2SGF-M2068 REV 9
CODE SGF-52.5806
AREA
AQ00007453

9-M950039 8-M900248 7-M830135

9255-2SGF-M2068
M2PD1
10/22/87 06:04:22 ATS5K

IP7016735

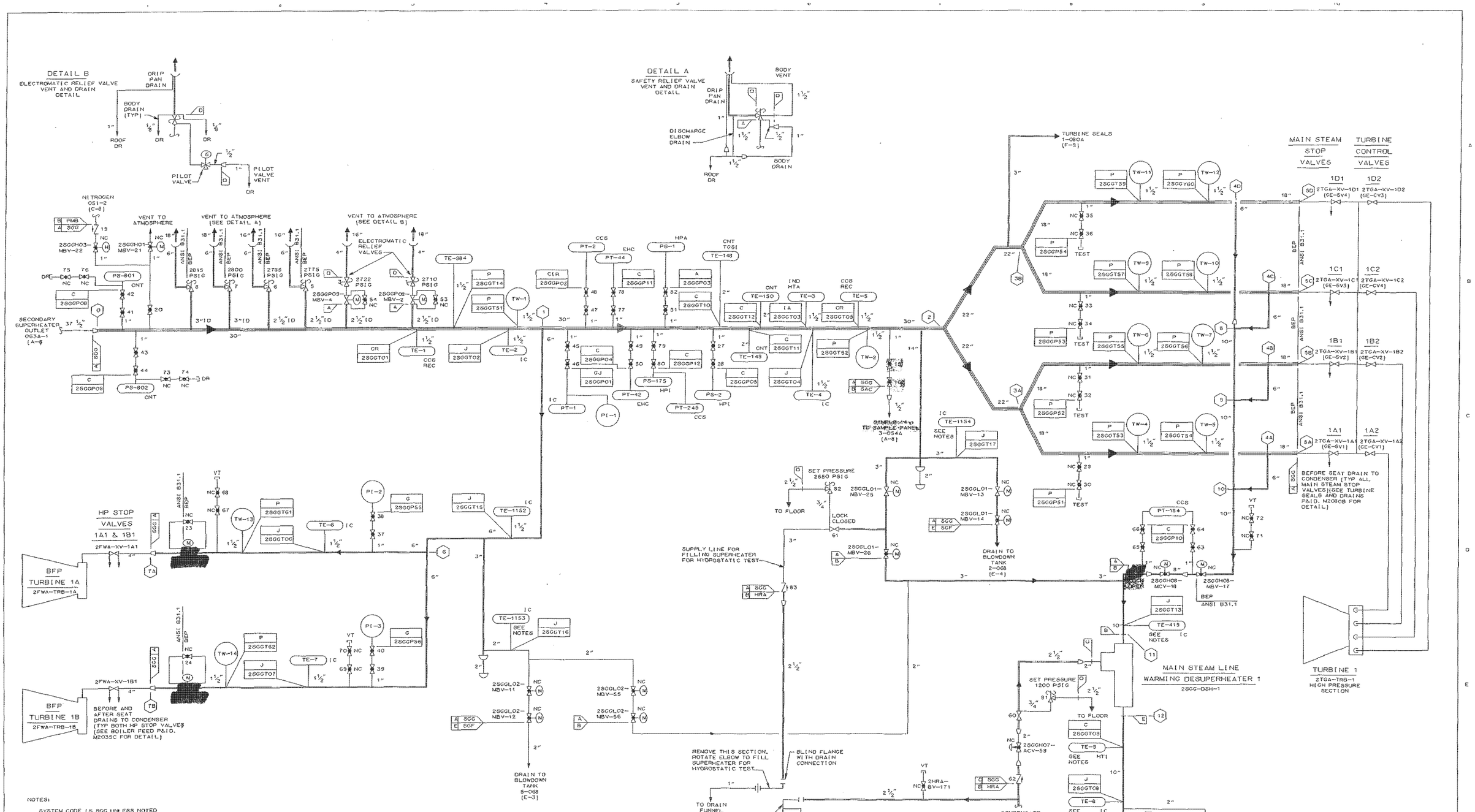

NOTES:

SYSTEM CODE IS SGG UNLESS NOTED

ALL VALVES ARE SERIES 2SGG-XX-0000 UNLESS NOTED

LAST VALVE NUMBER: 2SGG-XX-0083

LAST CONNECTION NUMBER: 6

TE-8,TE-9,TE-419,TE-1153, AND TE-1154 ARE CLAMP ON TEMPERATURE ELEMENTS

BOILER CODE UNIT THROUGH SECOND VALVE EXCEPT AS SHOWN BOILER EXTERNAL PIPING (BEP)

ALL RELIEF VALVE DRAINS ARE TIED TOGETHER BY A COMMON HEADER AND RUN TO ROOF DRAIN SYSTEM

DWP REVISIONS		
NO.	DESCRIPTION	
7	DS082: NCE49 W.O. #95-79774-01 (1-8.C)	
	PS-801 WAS PC-1. PS-802 WAS PC-2	

Revision Number 7
DRAFTING RELEASE
DRAWN BY S. REYES
CHECKED BY F. Bernal
ENGINEERING APPROVAL
OWNER/AGENT APPROVAL
DRAWING REVISION RELEASE APPROVAL
FINAL APPROVAL RELEASE SIGNATURE DATE

NO.	DATE	REVISIONS AND RECORD OF ISSUE	BY	CHK	APP	FLM
7	07-01-87	CONFORMED TO CONSTRUCTION RECORDS				GTB
6	07-01-87	CONFORMED TO CONSTRUCTION RECORDS				
5	06-07-85	GENERAL REVISIONS	DLS	CLK	HL	
4	05-10-85	APPROVED FOR CONSTRUCTION SPEC. 74.0201	NJA	CLK	HL	
3	01-18-85	GENERAL REVISIONS	NJA	CLK	HL	
2	09-14-84	APPROVED FOR CONSTRUCTION SPEC. 72.0202 AND 72.0403	MJC	CLK	HL	
1	05-04-84	GENERAL REVISIONS	MJC		HL	
0	02-24-84	INITIAL ISSUE	MJC		HL	

7-M360010

I HEREBY CERTIFY THAT THIS DOCUMENT WAS PREPARED BY ME OR UNDER MY DIRECT SUPERVISION AND THAT I AM A DULY REGISTERED PROFESSIONAL ENGINEER UNDER THE LAWS OF THE STATE OBTAIN

SIGNED

DATE 02-24-84 REG NO. 5746

BLACK & VEATCH CONSULTING ENGINEERS

ENGINEER MJC DRAWN AGG
CHECKED CLK DATE 09-07-84

IPP INTERMOUNTAIN POWER PROJECT

PIPING AND INSTRUMENT DIAGRAM
MAIN STEAM

PROJECT 9255 — DRAWING NUMBER 2SGG-M2069 REV 7
CODE 5GG-52.5807
AREA
A00007644

A00007644.DGN

9255-2SGG-M206
MEPD
10/22/87 06:46:44 ATSSK

IP7016736

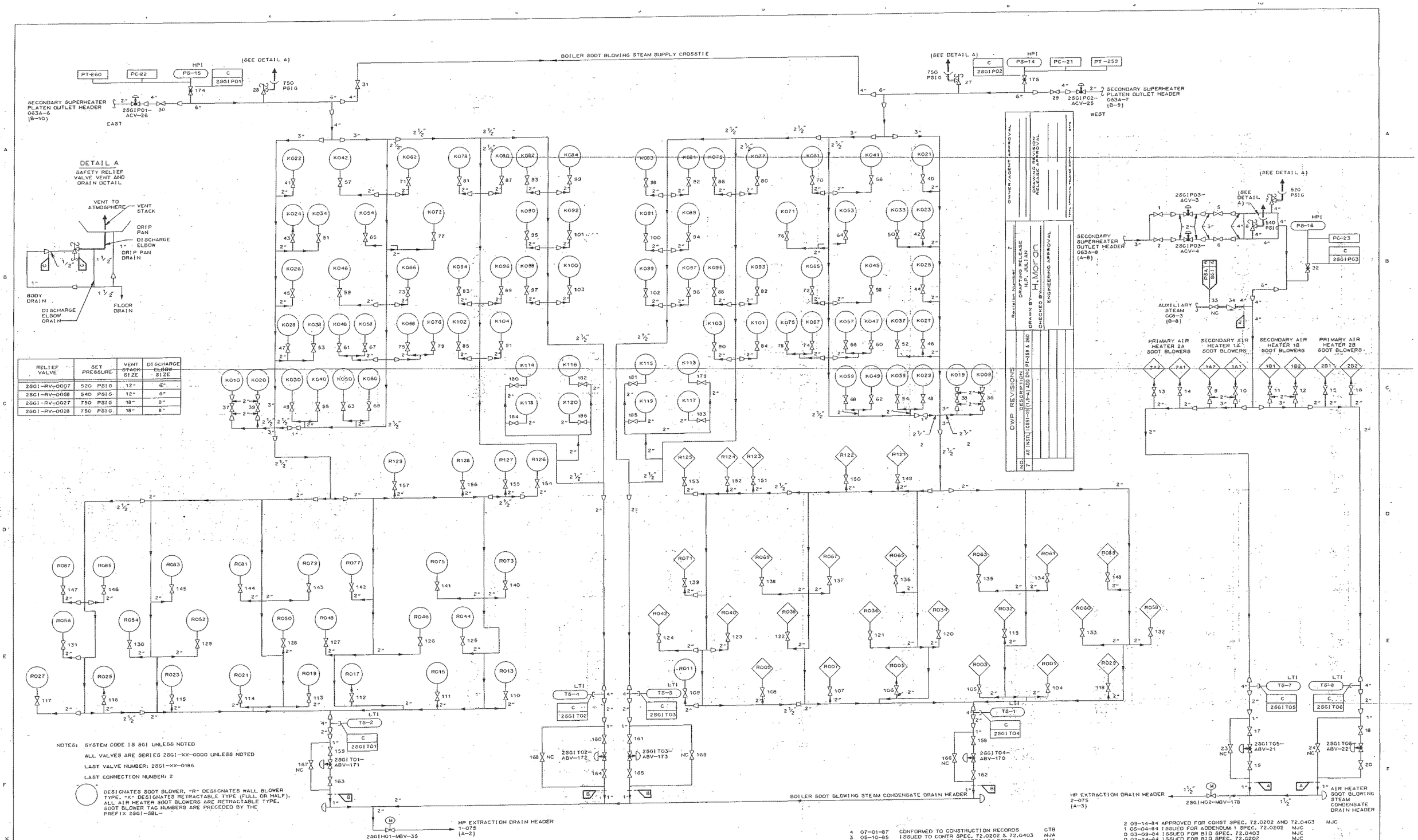

RELIEF VALVE	SET PRESSURE	VENT STACK SIZE	DISCHARGE ELBOW SIZE
2SGI-RV-0007	520 PSIG	12"	6"
2SGI-RV-0068	540 PSIG	12"	6"
2SGI-RV-0027	750 PSIG	18"	8"
2SGI-RV-0028	750 PSIG	18"	8"

NOTES: SYSTEM CODE IS SGI UNLESS NOTED

ALL VALVES ARE SERIES 2SGI-XX-0000 UNLESS NOTED

LAST VALVE NUMBER: 2SGI-XX-0186

LAST CONNECTION NUMBER: 2

"A" DESIGNATES SOOT BLOWER, "R" DESIGNATES WALL BLOWER TYPE, "K" DESIGNATES RETRACTABLE TYPE (FULL OR HALF). ALL AIR HEATER SOOT BLOWERS ARE RETRACTABLE TYPE. SOOT BLOWER TAG NUMBERS ARE PRECEDED BY THE PREFIX 2SGI-SBL-

NO.	DATE	REVISIONS AND RECORD OF ISSUE	BY	CHK	APP	FLM
4	07-01-87	CONFORMED TO CONSTRUCTION RECORDS				
3	05-10-85	APPROVED FOR CONSTRUCTION SPEC. 74.0202	NJA	CLK	HLJ	
2	09-14-84	APPROVED FOR CONSTRUCTION SPEC. 72.0202 AND 72.0403	MJC	CLK	HLJ	
1	05-04-84	GENERAL REVISIONS	MJC		HLJ	
0	02-24-84	INITIAL ISSUE	MJC		HLJ	

4 07-01-87 CONFORMED TO CONSTRUCTION RECORDS GTB
3 05-10-85 ISSUED TO CONTR SPEC. 72.0202 & 72.0403 NJA
3 05-10-85 APPROVED FOR CONST SPEC. 74.0202 NJA

2 09-14-84 APPROVED FOR CONST SPEC. 72.0202 AND 72.0403 MJC
1 05-04-84 ISSUED FOR ADDENDUM 1 SPEC. 72.0202 MJC
0 03-09-84 ISSUED FOR BID SPEC. 72.0403 MJC
0 02-24-84 ISSUED FOR BID SPEC. 72.0202 MJC

I HEREBY CERTIFY THAT THIS DOCUMENT WAS PREPARED BY ME OR UNDER MY DIRECT SUPERVISION AND THAT I AM A DULY REGISTERED PROFESSIONAL ENGINEER UNDER THE LAWS OF THE STATE OF UTAH

SIGNED

DATE 02-24-84 REG NO. 5748

BLACK & VEATCH CONSULTING ENGINEERS

ENGINEER MJC DRAWN AGG
CHECKED CL KLING DATE 09-07-84

IPP INTERMOUNTAIN POWER PROJECT

PIPING AND INSTRUMENT DIAGRAM
SOOT BLOWING

7-E960035

PROJECT 9255 — DRAWING NUMBER 2SGI-M2070 REV 7

CODE SGI-52.5809

AREA

A00007454

9255-2SGI-M2070
M2PD 10/22/87 03:52:49 ATSSK

IP7016737

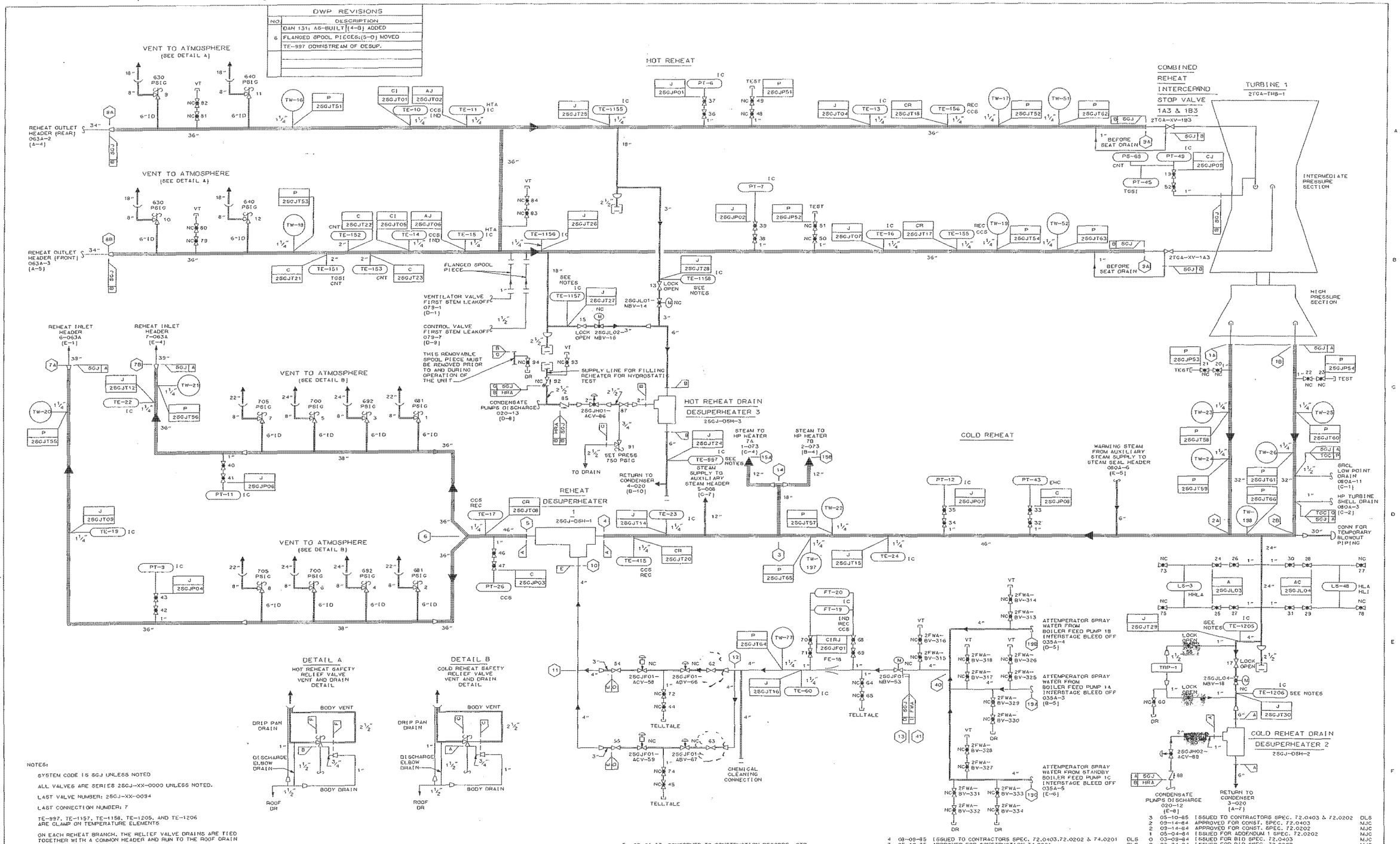

NOTES:

SYSTEM CODE IS SGJ UNLESS NOTED

ALL VALVES ARE SERIES 2SGJ-XX-0000 UNLESS NOTED.

LAST VALVE NUMBER: 2SGJ-XX-0094

LAST CONNECTION NUMBER: 7

TE-997, TE-1157, TE-1158, TE-1205, AND TE-1206 ARE CLAMP ON TEMPERATURE ELEMENTS

ON EACH REHEAT BRANCH, THE RELIEF VALVE DRAINS ARE TIED TOGETHER WITH A COMMON HEADER AND RUN TO THE ROOF DRAIN

NO.	DATE	REVISIONS AND RECORD OF ISSUE	BY	CHK	APP	FLM
5	07-01-87	CONFORMED TO CONSTRUCTION RECORDS	GTB	MJC	HLJ	
4	08-09-85	GENERAL REVISIONS	DLS	CLK	HLJ	
3	05-10-85	APPROVED FOR CONSTRUCTION SPEC. 74.0201	DLS	CLK	HLJ	
2	09-14-84	APPROVED FOR CONSTRUCTION SPEC. 72.0202 AND 72.0403	MJC	CLK	HLJ	
1	05-04-84	GENERAL REVISIONS	MJC		HLJ	
0	02-24-84	INITIAL ISSUE	MJC		HLJ	

6-M900248

I HEREBY CERTIFY THAT THIS DOCUMENT WAS PREPARED BY ME OR UNDER MY DIRECT SUPERVISION AND THAT I AM A DULY REGISTERED PROFESSIONAL ENGINEER UNDER THE LAWS OF THE STATE OBTAH

SIGNED Hobart Lee Jacobs

DATE 2-24-84 REG NO. 5746

NO.	DATE	REVISIONS AND RECORD OF ISSUE	BY	CHK	APP	FLM
5	07-01-87	CONFORMED TO CONSTRUCTION RECORDS GTB				
4	08-09-85	ISSUED TO CONTRACTORS SPEC. 72.0403, 72.0202 & 74.0201	DLS			
3	05-10-85	APPROVED FOR CONSTRUCTION 74.0201	DLS			
2	09-14-84	APPROVED FOR CONST. SPEC. 72.0403	MJC			
2	09-14-84	APPROVED FOR CONST. SPEC. 72.0202	MJC			
1	05-04-84	ISSUED FOR ADDENDUM 1 SPEC. 72.0202	MJC			
0	03-09-84	ISSUED FOR BID SPEC. 72.0403	MJC			
0	02-24-84	ISSUED FOR BID SPEC. 72.0202	MJC			

BLACK & VEATCH CONSULTING ENGINEERS

ENGINEER MJC DRAWN AGG CHECKED CL KLING DATE 09-07-84

IPP INTERMOUNTAIN POWER PROJECT

PIPING AND INSTRUMENT DIAGRAM REHEAT SYSTEM

PROJECT 9255 — 2SGJ—M2071 REV 6

CODE SGJ-52.5810 AREA

A00007643

9255-2SGJ-M2071 M2PD 10/23/87 09:57:42 AT85K

3-12-91

IP7016738

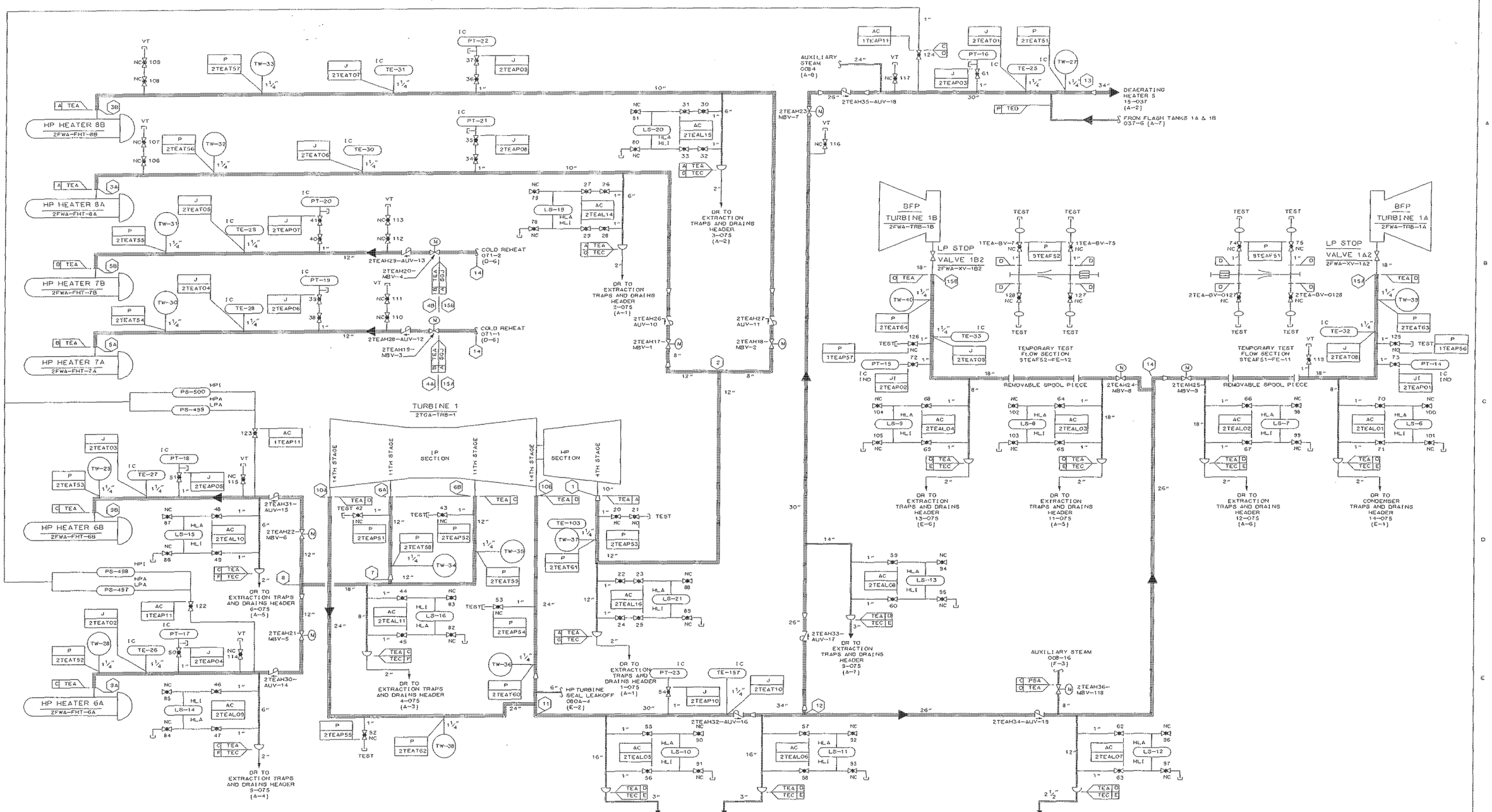

NOTES:

SYSTEM CODE IS TEA UNLESS NOTED

ALL VALVES ARE SERIES 2TEA-XX-0000 UNLESS NOTED

LAST VALVE NUMBER: 2TEA-XX-0128

LAST CONNECTION NUMBER: 15

DWP REVISIONS		
NO.	DESCRIPTION	
6	CMP760:AS BUILT (4-D) ADD INSTRUMENT NO. TE-103	
7	AS BUILT (8-A) ADD 10" LINE FROM FLASH TANKS ((GS 91-2)	

NO.	DATE	REVISIONS AND RECORD OF ISSUE	BY	CHK	APP	FLM
5	07-01-87	CONFORMED TO CONSTRUCTION RECORDS	GTB			
4	08-03-85	GENERAL REVISIONS	NJA	MJ	JHL	
3	05-10-85	APPROVED FOR CONSTRUCTION SPEC 74.0201	NJA	LJS	HL	
2	01-18-85	GENERAL REVISIONS	NJA	LJS	HL	
1	03-14-84	APPROVED FOR CONSTRUCTION SPECS 72.0202 & 72.0403	NJA	LJS	HL	
0	02-24-84	INITIAL ISSUE	NJA		HL	

NO.	DATE	REVISIONS AND RECORD OF ISSUE	BY	CHK	APP	FLM
5	07-01-87	CONFORMED TO CONSTRUCTION RECORDS	GTB			
4	08-03-85	ISSUED TO CONTR-72.0202,72.0403,74.0201	NJA			
3	05-10-85	APPROVED FOR CONTR SPEC 74.0201	DLS			
3	05-10-85	ISSUED TO CONTR. SPECS 72.0202 & 72.0403	NJA			
2	01-18-85	ISSUED TO CONTR. SPECS 72.0202 & 72.0403	NJA			
1	03-14-84	APPROVED FOR CONSTRUCTION SPECS 72.0202 & 72.0403	NJA			
0	03-03-84	ISSUED FOR BID SPEC 72.0403	RSP			
0	02-24-84	ISSUED FOR BID SPEC 72.0202	NJA			

I HEREBY CERTIFY THAT THIS DOCUMENT WAS PREPARED BY ME OR UNDER MY DIRECT SUPERVISION AND THAT I AM A DULY REGISTERED PROFESSIONAL ENGINEER UNDER THE LAWS OF THE STATE OBTAIN

SIGNED Hobart Lee Jacobs

DATE 2-24-84 REG NO. 5746

BLACK & VEATCH CONSULTING ENGINEERS

ENGINEER NJA | DRAWN AGG

CHECKED LJS | DATE 03-07-84

IPP INTERMOUNTAIN POWER PROJECT

PIPING AND INSTRUMENT DIAGRAM
HIGH PRESSURE EXTRACTION

PROJECT 9255 — DRAWING NUMBER 2TEA-M2073 REV 7

CODE TEA-S2.6001

AREA

A00006815

6-M920132 7-N940180

IP7016739

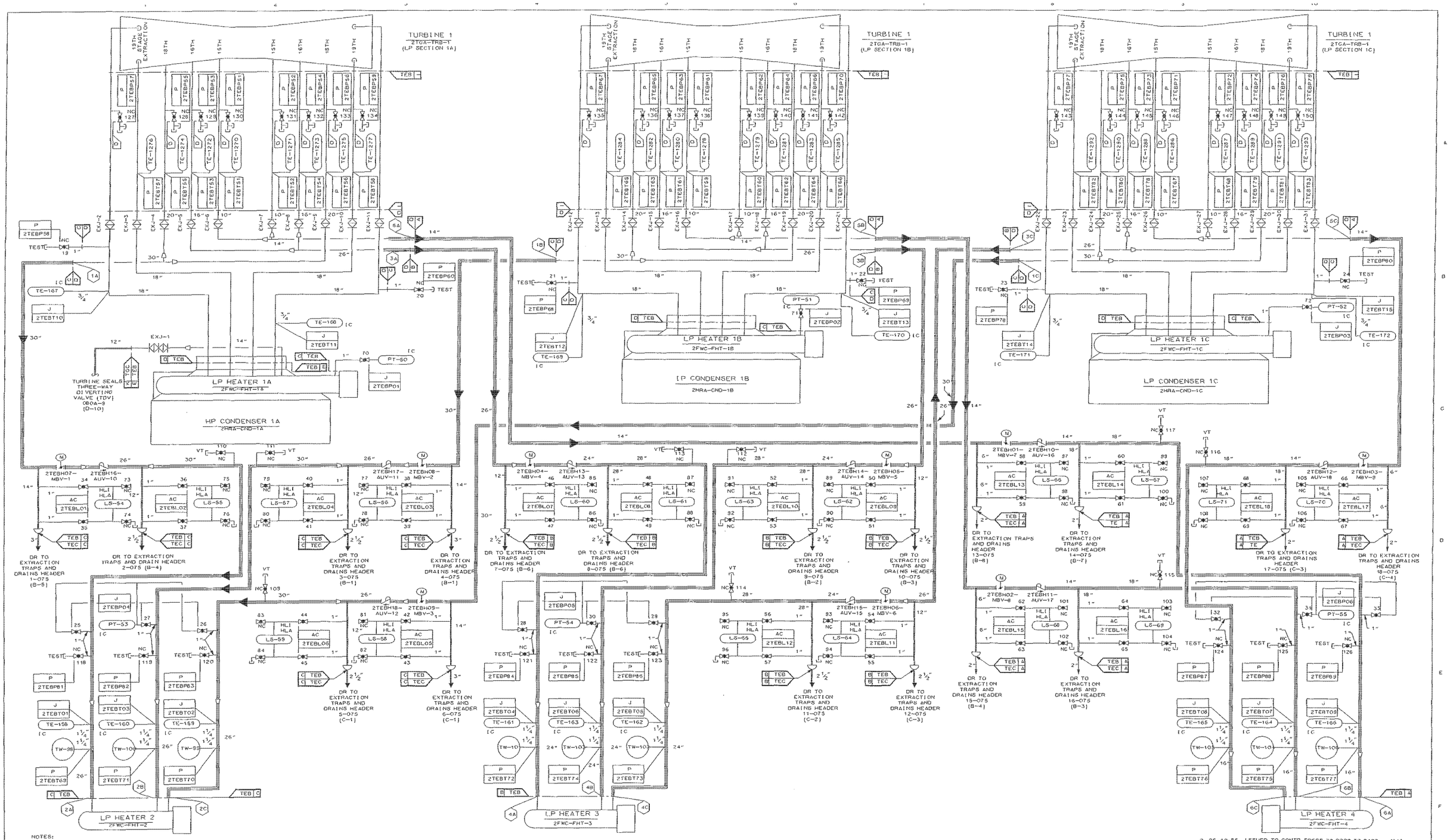

NOTES:

SYSTEM CODE IS TEB UNLESS NOTED

ALL VALVES ARE SERIES 2TEB-XX-0000 UNLESS NOTED

LAST VALVE NUMBER: 2TEB-XX-0150

LAST CONNECTION NUMBER: 18

NO.	DATE	REVISIONS AND RECORD OF ISSUE	BY	CHK	APP	FLM
3	07-01-87	CONFORMED TO CONSTRUCTION RECORDS				
2	05-10-85	APPROVED FOR CONSTRUCTION SPEC 74.0202	NJA	LJS	HL	
1	09-14-84	APPROVED FOR CONSTRUCTION-SPECS 72.0202 & 72.0403	NJA	LJS	HL	
0	02-24-84	INITIAL ISSUE	NJA		HL	

I HEREBY CERTIFY THAT THIS DOCUMENT WAS PREPARED BY ME OR UNDER MY DIRECT SUPERVISION AND THAT I AM A DULY REGISTERED PROFESSIONAL ENGINEER UNDER THE LAWS OF THE STATE OBTAIN

SIGNED _____

DATE 2-24-84 REG NO. 5746

BLACK & VEATCH CONSULTING ENGINEERS

ENGINEER NJA | DRAWN AGG

CHECKED LJS | DATE 03-07-84

IPP INTERMOUNTAIN POWER PROJECT

PIPING AND INSTRUMENT DIAGRAM
LOW PRESSURE EXTRACTION

PROJECT 9255 — DRAWING NUMBER 2TEB-M2074 REV 3

CODE TEB-52.6002

AREA

2	05-10-85	ISSUED TO CONTR SPECS 72.0202,72.0403	NJA	
1	09-14-84	APPROVED FOR CONSTRUCTION SPECS 72.0202 & 72.0403	NJA	
0	03-03-84	ISSUED FOR BID SPEC 72.0403	RSP	
0	02-24-84	ISSUED FOR BID SPE 72.0202	NJA	
3	07-01-87	CONFORMED TO CONSTRUCTION RECORDS	GTB	
2	05-10-85	APPROVED FOR CONSTRUCTION SPEC 74.0202	DLS	

9255-2TEB-M2074
M2PD
10/22/87 10:00:59 ATSSK

IP7016740

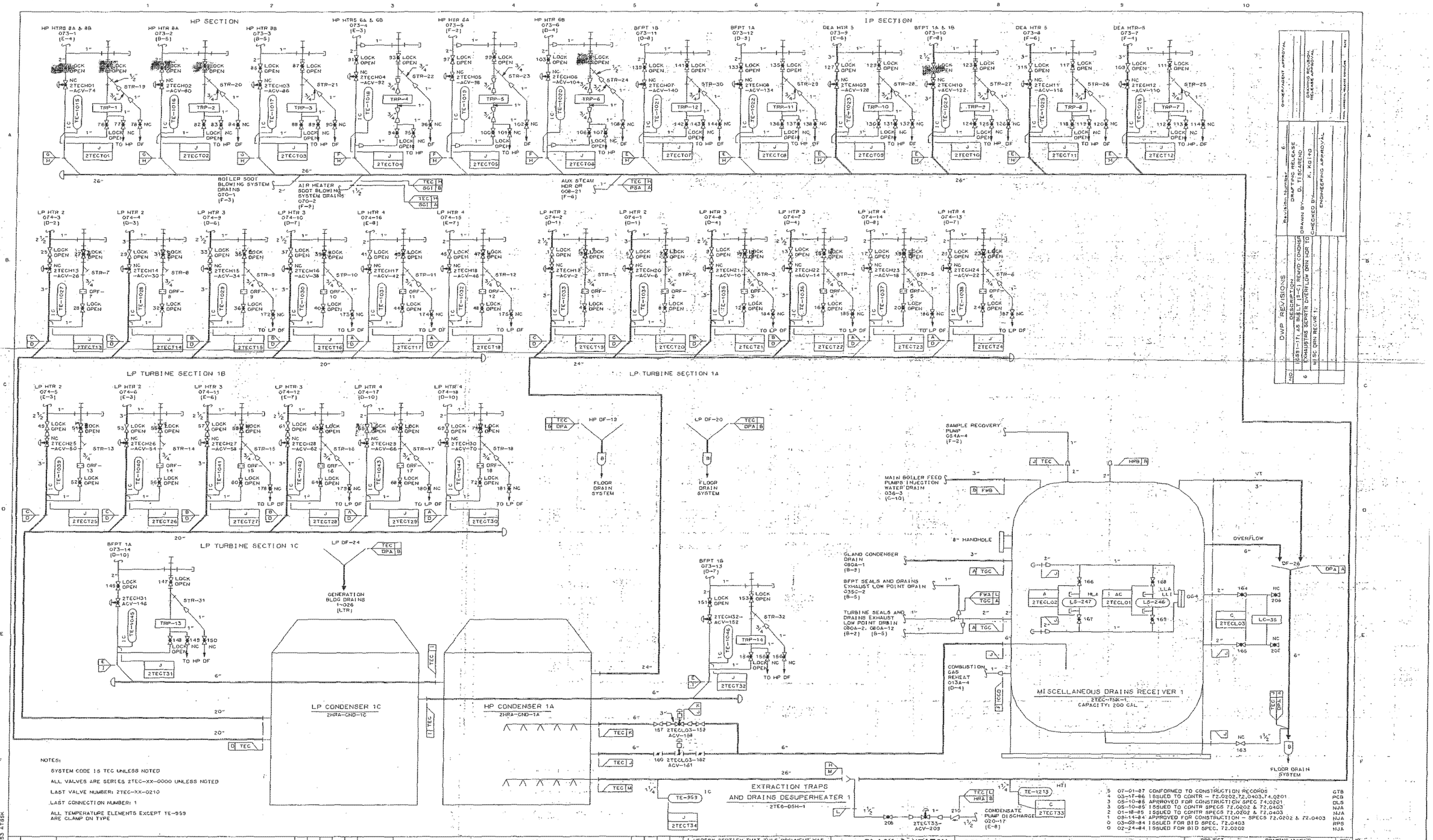

NO	DATE	REVISIONS AND RECORD OF ISSUE	BY	CH	AP	FLM
5	07-01-87	CONFORMED TO CONSTRUCTION RECORDS	PCE	NJA	JHL	
4	03-17-86	CONFORMED TO CONSTRUCTION RECORDS				
3	05-10-85	APPROVED FOR CONSTRUCTION SPEC 74.0201	NJA	LJS	HL	
2	01-18-85	GENERAL REVISIONS	NJA	LJS	HL	
1	08-14-84	APPROVED FOR CONSTRUCTION - SPEC 72.0202 & 72.0403	NJA	LJS	HL	
0	02-24-84	INITIAL ISSUE	NJA		HL	

I HEREBY CERTIFY THAT THIS DOCUMENT WAS PREPARED BY ME OR UNDER MY DIRECT SUPERVISION AND THAT I AM A DULY REGISTERED PROFESSIONAL ENGINEER UNDER THE LAWS OF THE STATE OF UTAH

SIGNED

DATE 02-24-84 REG NO. 5746

6-M940050

BLACK & VEATCH CONSULTING ENGINEERS

ENGINEER NJA DRAWN AGG
CHECKED LJS DATE 07-02-84

IPP INTERMOUNTAIN POWER PROJECT

PIPING AND INSTRUMENT DIAGRAM
EXTRACTION TRAPS AND DRAINS

PROJECT 9255 DRAWING NUMBER 2TEC-M2075 REV 6

CODE TEC-52.6003
AREA A00006833

NO	DATE	DESCRIPTION	DRAWN BY	CHECKED BY
6	1/6/93-1/7/93	AS BUILT (3-C) REMOVE CONDENS EXHAUSTERS SEPRTR OVERFLOW DRN HDR TO MISC DRN RECVR 1	K. KOIKO	

Revision number 6
DRAFTING RELEASE D. TISCARENO
DRAWING REVISION RELEASE APPROVAL
ENGINEERING APPROVAL
OWNER/AGENT APPROVAL

9255-2TEC-M2075
USER: 10/22/87 07:29:53 ATBSK

IP7016741

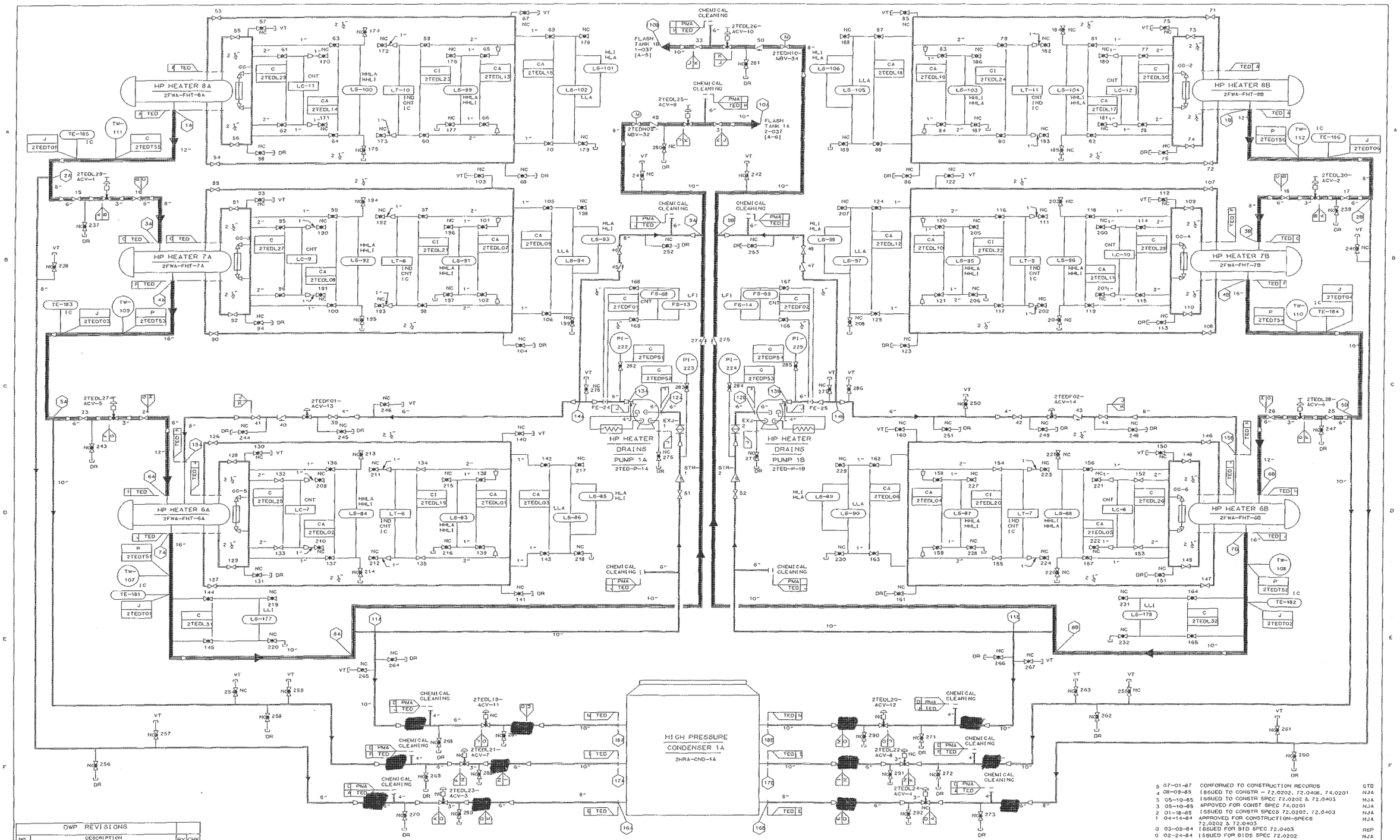

DWP REVISIONS			
NO.	DESCRIPTION	BY	CHK
6	AS-BUILT (5,6-A) 1 TO FLASH TANKS 1A & 1B WERE TO DEARATING HTR 5. (ICS 91-2)		
7	ICS97-11 PE #166870 DEAN E. WOOD	DW	JHN
	6-3-98: (4&7,F): ADDED TELL-TALE VLVS		

NOTES: SYSTEM CODE IS TED UNLESS NOTED.
ALL VALVES ARE SERIES 2TED-XX-0000 UNLESS NOTED.
LAST VALVE NUMBER: 2TED-XX-0292
LAST CONNECTION NUMBER: 2

I HEREBY CERTIFY THAT THIS DOCUMENT WAS PREPARED BY ME OR UNDER MY DIRECT SUPERVISION AND THAT I AM A DULY REGISTERED PROFESSIONAL ENGINEER UNDER THE LAWS OF THE STATE OBTAH
SIGNED Hobart Lee Jacobs
DATE 02-24-84 REG NO. 5746

BLACK & VEATCH CONSULTING ENGINEERS
ENGINEER NJA DRAWN AGC
CHECKED LJS DATE 07-02-84

IPP INTERMOUNTAIN POWER PROJECT

PIPING AND INSTRUMENT DIAGRAM
HIGH PRESSURE HEATER DRAINS

PROJECT 9255 – DRAWING NUMBER 2TED-M2076 REV 7
CODE A00006854
AREA TED-52.6004

5	07-01-87	CONFORMED TO CONSTRUCTION RECORDS	GTB
4	08-09-85	ISSUED TO CONSTR – 72.0202, 72.0406, 74.0201	NJA
3	05-10-85	ISSUED TO CONSTR SPEC 72.0202 & 72.0403	NJA
3	05-10-85	APPOVED FOR CONST SPEC 74.0201	NJA
2	01-18-85	ISSUED TO CONSTR SPECS 72.0202, 72.0403	NJA
1	04-14-84	APPROVED FOR CONSTRUCTION–SPECS 72.0202 & 72.0403	NJA
0	03-09-84	ISSUED FOR BID SPEC 72.0403	RSP
0	02-24-84	ISSUED FOR BIDS SPEC 72.0202	NJA

6-M940180

IP7016742

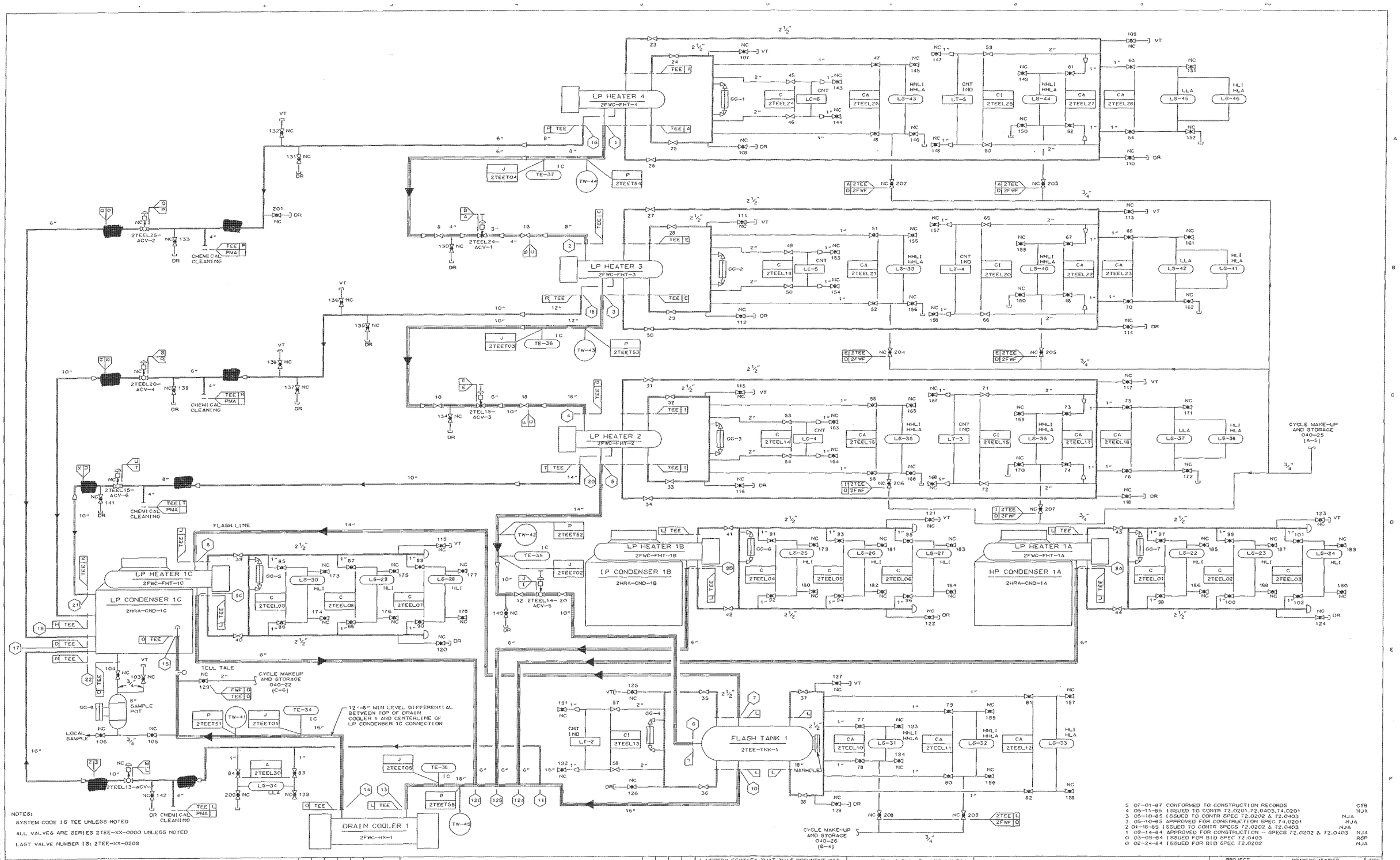

NOTES:

SYSTEM CODE IS TEE UNLESS NOTED

ALL VALVES ARE SERIES 2TEE-XX-0000 UNLESS NOTED

LAST VALVE NUMBER IS: 2TEE-XX-0208

NO.	DATE	REVISIONS AND RECORD OF ISSUE	BY	CHK	APP	FLM
5	07-01-87	CONFORMED TO CONSTRUCTION RECORDS	NJA	LJS	HLS	
4	06-11-85	GENERAL REVISIONS	NJA	LJS	HLS	
3	05-10-85	APPROVED FOR CONSTRUCTION SPEC 74.0201	NJA	LJS	HLS	
2	01-18-85	ISSUED TO CONTR SPECS 72.0202 & 72.0403	NJA	LJS	HLS	
1	09-14-84	APPROVED FOR CONSTRUCTION - SPECS 72.0202 & 72.0403	NJA	LJS	HLS	
0	02-24-84	INITIAL ISSUE	NJA		HLS	

I HEREBY CERTIFY THAT THIS DOCUMENT WAS PREPARED BY ME OR UNDER MY DIRECT SUPERVISION AND THAT I AM A DULY REGISTERED PROFESSIONAL ENGINEER UNDER THE LAWS OF THE STATE OBTAIN

SIGNED

DATE 02-24-84 REG NO. 5746

BLACK & VEATCH CONSULTING ENGINEERS

ENGINEER NJA | DRAWN AGG | CHECKED LJS | DATE 07-02-84

IPP INTERMOUNTAIN POWER PROJECT

PIPING AND INSTRUMENT DIAGRAM
LOW PRESSURE HEATER DRAINS

PROJECT 9255 | DRAWING NUMBER 2TEE-M2077 | REV 5

CODE TEE-52.6005

AREA

5	07-01-87	CONFORMED TO CONSTRUCTION RECORDS CTB
4	06-11-85	ISSUED TO CONTR 72.0201,72.0403,74.0201 NJA
3	05-10-85	ISSUED TO CONTR SPEC 72.0202 & 72.0403 NJA
3	05-10-85	APPROVED FOR CONSTRUCTION SPEC 74.0201 NJA
2	01-18-85	ISSUED TO CONTR SPECS 72.0202 & 72.0403 NJA
1	09-14-84	APPROVED FOR CONSTRUCTION - SPECS 72.0202 & 72.0403 NJA
0	03-09-84	ISSUED FOR BID SPEC 72.0403 RSP
0	02-24-84	ISSUED FOR BID SPEC 72.0202 NJA

9255-2TEE-M2077
MRPD
10/22/87 10:23:28 ATSSK

IP7016743

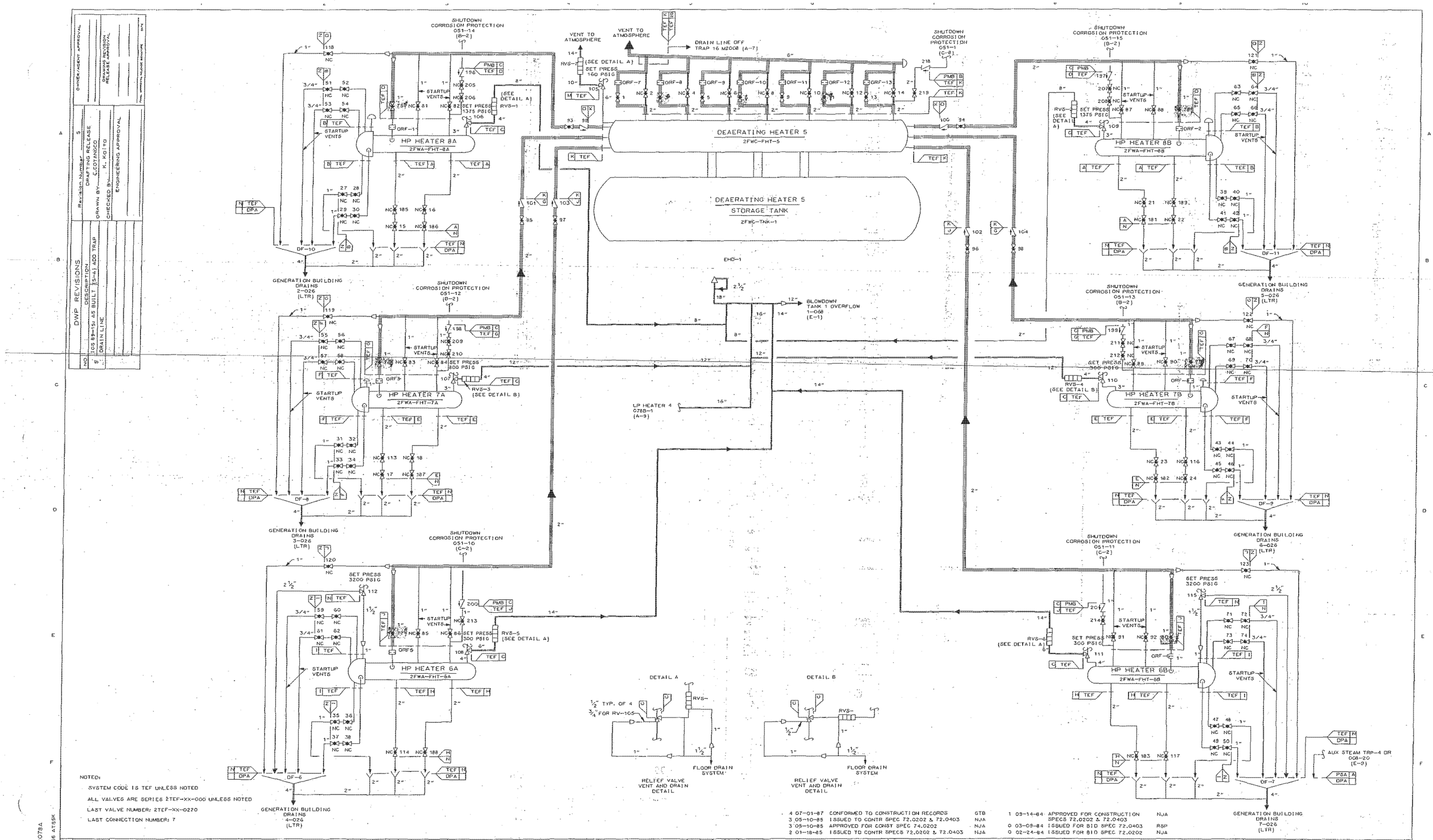

NOTED:

SYSTEM CODE IS TEF UNLESS NOTED

ALL VALVES ARE SERIES 2TEF-XX-000 UNLESS NOTED

LAST VALVE NUMBER: 2TEF-XX-0220

LAST CONNECTION NUMBER: 7

NO.	DATE	REVISIONS AND RECORD OF ISSUE	BY	CHK	APP	FLM
4	07-01-87	CONFORMED TO CONSTRUCTION RECORDS	GTB			
3	05-10-85	ISSUED TO CONTR SPEC 72.0202 & 72.0403	NJA			
3	05-10-85	APPROVED FOR CONST SPEC 74.0202	NJA			
2	01-18-85	ISSUED TO CONTR SPECS 72.0202 & 72.0403	NJA			
1	09-14-84	APPROVED FOR CONSTRUCTION SPECS 72.0202 & 72.0403	NJA			
0	03-09-84	ISSUED FOR BID SPEC 72.0403	RSP			
0	02-24-84	ISSUED FOR BID SPEC 72.0202	NJA			

NO.	DATE	REVISIONS AND RECORD OF ISSUE	BY	CHK	APP	FLM
3	05-10-85	APPROVED FOR CONSTRUCTION SPEC 74.0202	NJA	LJS	HLJ	
2	01-18-85	GENERAL REVISIONS	NJA	LJS	HLJ	
1	09-14-84	APPROVED FOR CONSTRUCTION SPECS 72.0202 & 72.0403	NJA	LJS	HLJ	
0	02-24-84	INITIAL ISSUE	NJA		HLJ	
4	07-01-87	CONFORMED TO CONSTRUCTION RECORDS				

I HEREBY CERTIFY THAT THIS DOCUMENT WAS PREPARED BY ME OR UNDER MY DIRECT SUPERVISION AND THAT I AM A DULY REGISTERED PROFESSIONAL ENGINEER UNDER THE LAWS OF THE STATE OBTAH

SIGNED

DATE 02-24-84 REG NO. 5746

BLACK & VEATCH CONSULTING ENGINEERS

ENGINEER NJA DRAWN AGG

CHECKED LJS DATE 09-07-84

IPP INTERMOUNTAIN POWER PROJECT

PIPING AND INSTRUMENT DIAGRAM
HEATER VENTS AND MISCELLANEOUS DRAINS

PROJECT 9255 DRAWING NUMBER 2TEF-M2078A REV 5

CODE TEF-52.6006 AREA A00012604

5-M930105

A00012604.DGN

9255-2TEF-M2078A
M2PD
10/22/87 03:42:36 AT55K

IP7016744

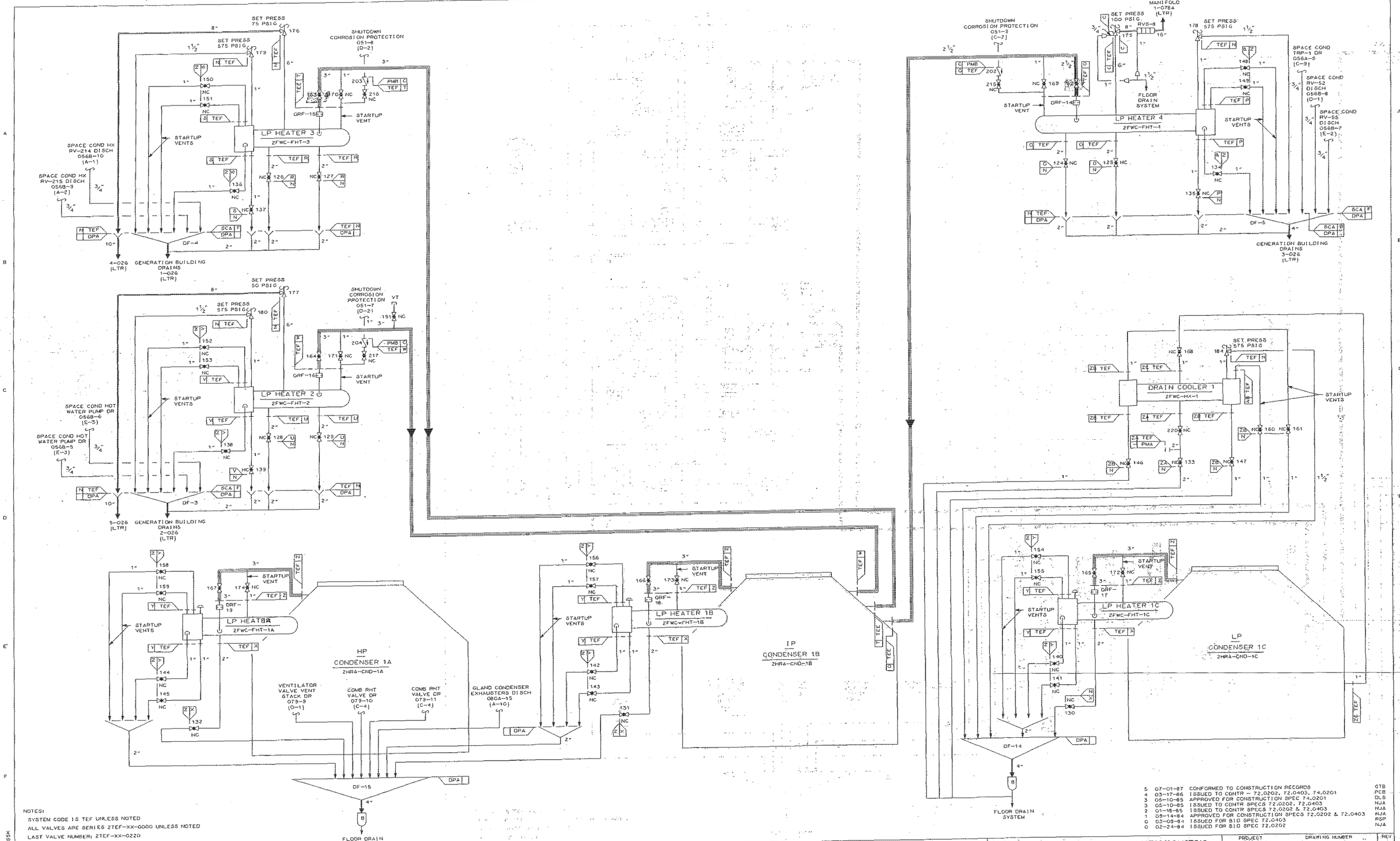

NOTES:
SYSTEM CODE IS TEF UNLESS NOTED
ALL VALVES ARE SERIES 2TEF-XX-0000 UNLESS NOTED
LAST VALVE NUMBER: 2TEF-XX-0220
LAST CONNECTION NUMBER: 7

NO.	DATE	REVISIONS AND RECORD OF ISSUE	BY	CHK	APP	FLM
5	07-01-87	CONFORMED TO CONSTRUCTION RECORDS	PCB	NJA	JHL	
4	03-17-86	REVISED LP HEATER 1 DRAIN CONNECTIONS				
3	05-10-85	APPROVED FOR CONSTRUCTION SPEC 74.0201	NJA	LJ	SHL	
2	01-18-85	GENERAL REVISIONS	NJA	LJ	SHL	
1	09-14-84	APPROVED FOR CONSTRUCTION SPECS 72.0202 & 72.0403	NJA	LJ	SHL	
0	02-24-84	INITIAL ISSUE	NJA		HL	

I HEREBY CERTIFY THAT THIS DOCUMENT WAS PREPARED BY ME OR UNDER MY DIRECT SUPERVISION AND THAT I AM A DULY REGISTERED PROFESSIONAL ENGINEER UNDER THE LAWS OF THE STATE OBTAH
SIGNED
DATE 02-24-84 REG NO. 5746

BLACK & VEATCH CONSULTING ENGINEERS

IPP INTERMOUNTAIN POWER PROJECT

ENGINEER NJA | DRAWN AGG | CHECKED LJS | DATE 09-07-84

PIPING AND INSTRUMENT DIAGRAM
HEATER-VENTS AND MISCELLANEOUS DRAINS

PROJECT 9255 | DRAWING NUMBER 2TEF-M2078B | REV 5
CODE TEF-52.6006
AREA

9255-2TEF-M2078B
W2PD
10/30/87 18:01:07 AT95K

IP7016745

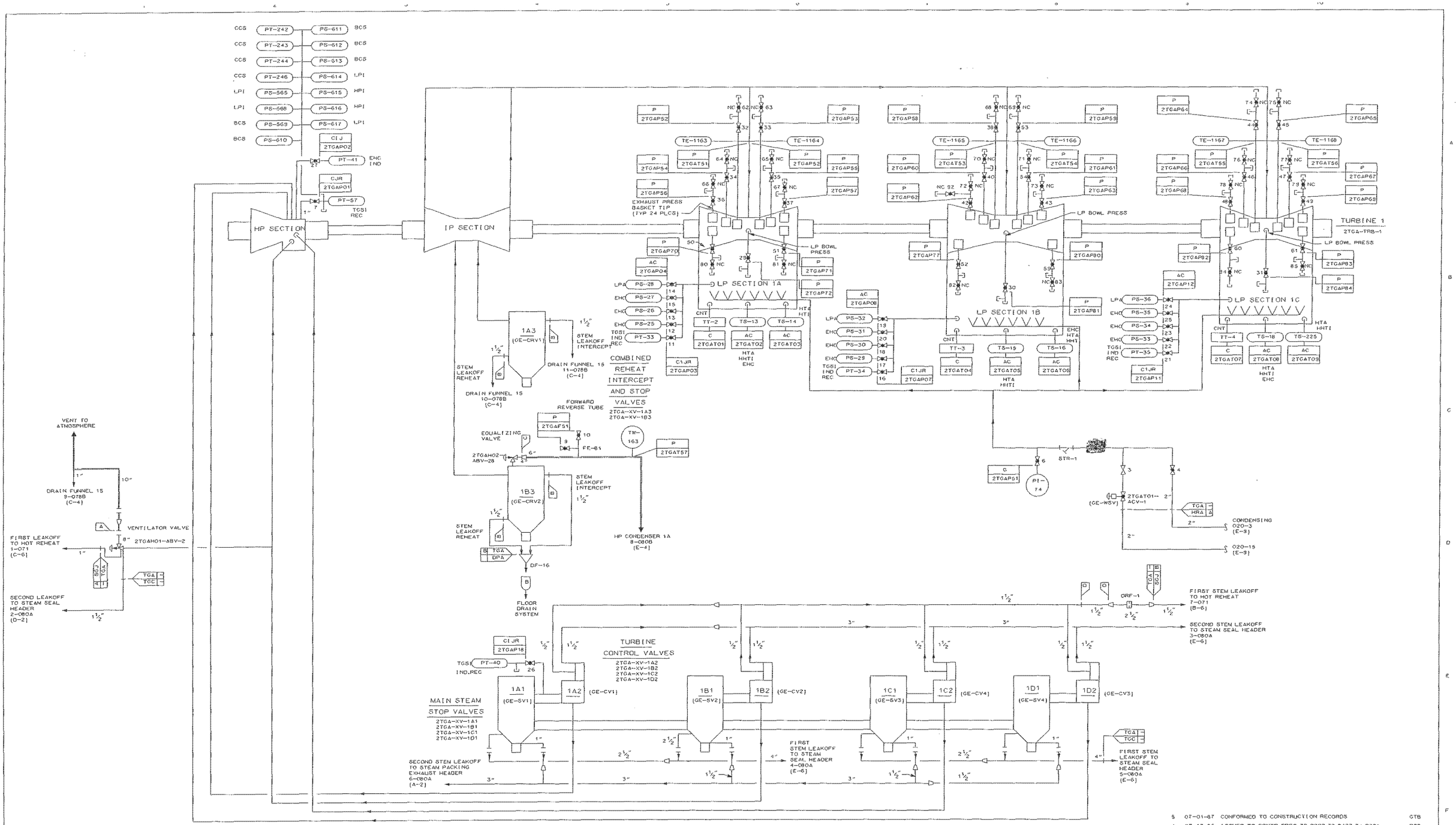

NOTES:

SYSTEM CODE IS TGA UNLESS NOTED

ALL VALVES ARE SERIES 2TGA-XX-0000 UNLESS NOTED

LAST VALVE NUMBER: 2TGA-XX-0092

LAST CONNECTION NUMBER: 11

TURBINE 1
2TGA-TRB-1

5	07-01-87	CONFORMED TO CONSTRUCTION RECORDS	GTB
4	03-17-86	ISSUED TO CONTR SPEC 72.0202,72.0403,74.0201	PCB
3	05-10-85	APPROVED FOR CONSTRUCTION SPEC 74.0201	DLS
3	05-10-85	ISSUED TO CONTR SPECS 72.0202,72.0403	NJA
2	01-18-85	ISSUED TO CONTR. SPECS. 72.0202,72.0403	NJA
1	09-14-84	APPROVED FOR CONSTRUCTION SPECS 72.0202 & 72.0403	NJA
0	03-08-84	ISSUED FOR BID SPEC 72.0403	RSP
0	02-24-84	ISSUED FOR BID SPEC 72.0202	NJA

NO.	DATE	REVISIONS AND RECORD OF ISSUE	BY	CHK	APP	FLM
3	05-10-85	APPROVED FOR CONSTRUCTION 74.0201	NJA	LJS	HLJ	
2	01-18-85	GENERAL REVISIONS	NJA	LJS	HLJ	
1	09-14-84	APPROVED FOR CONSTRUCTION SPECS 72.0202 & 72.0403	NJA	LJS	HLJ	
0	2-24-84	INITIAL ISSUE	NJA		HLJ	
5	07-01-87	CONFORMED TO CONSTRUCTION RECORDS	PCB	NJA	HLJ	
4	03-17-86	REVISED BASKET TIP ISOLATION VALVE TAG NUMBERS	PCB	NJA	HLJ	

I HEREBY CERTIFY THAT THIS DOCUMENT WAS PREPARED BY ME OR UNDER MY DIRECT SUPERVISION AND THAT I AM A DULY REGISTERED PROFESSIONAL ENGINEER UNDER THE LAWS OF THE STATE OBTAIN

SIGNED _____

DATE 03-18-83 REG NO. 5746

BLACK & VEATCH CONSULTING ENGINEERS

IPP INTERMOUNTAIN POWER PROJECT

ENGINEER NJA | DRAWN AGG | CHECKED LJS | DATE 09-07-84

PIPING AND INSTRUMENT DIAGRAM
TURBINE

PROJECT DRAWING NUMBER: 9255 – 2TGA-M2079 | REV 5

CODE TGA-52.6201

AREA

9255-2TGA-M2079
MRPD
10/30/87 14:15:18 ATSSK

IP7016746

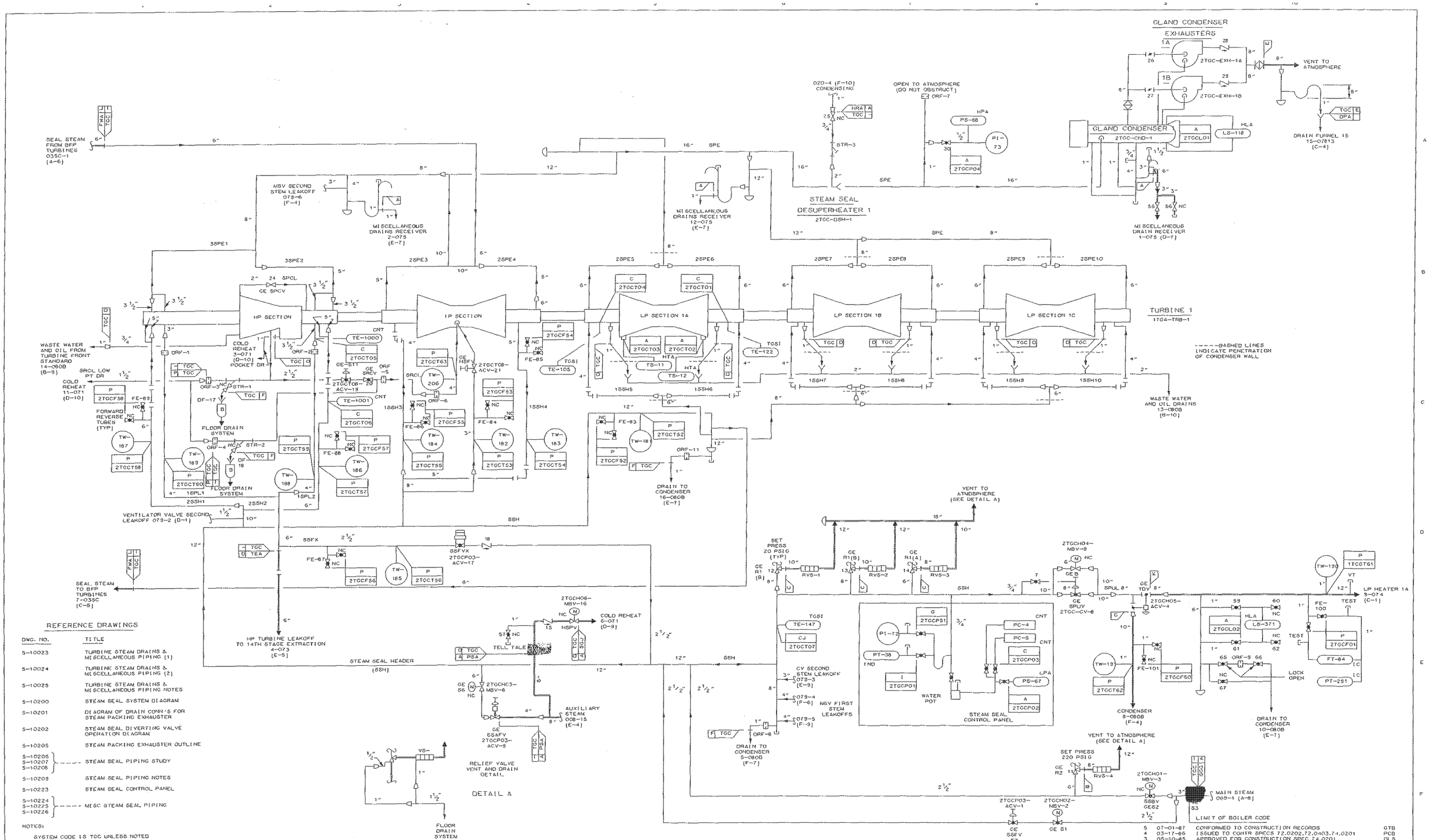

REFERENCE DRAWINGS

DWG. NO.	TITLE
5-10023	TURBINE STEAM DRAINS & MISCELLANEOUS PIPING (1)
5-10024	TURBINE STEAM DRAINS & MISCELLANEOUS PIPING (2)
5-10025	TURBINE STEAM DRAINS & MISCELLANEOUS PIPING NOTES
5-10200	STEAM SEAL SYSTEM DIAGRAM
5-10201	DIAGRAM OF DRAIN CONN'S FOR STEAM PACKING EXHAUSTER
5-10202	STEAM SEAL DIVERTING VALVE OPERATION DIAGRAM
5-10205	STEAM PACKING EXHAUSTER OUTLINE
5-10206, 5-10207, 5-10208	STEAM SEAL PIPING STUDY
5-10209	STEAM SEAL PIPING NOTES
5-10223	STEAM SEAL CONTROL PANEL
5-10224, 5-10225, 5-10226	MISC STEAM SEAL PIPING

NOTES:

SYSTEM CODE IS TGC UNLESS NOTED

ALL VALVES ARE SERIES 2TGC-XX-0000 UNLESS NOTED

LAST VALVE NUMBER: 2TGC-XX-0067

LAST CONNECTION NUMBER: 16

NO.	DATE	REVISIONS AND RECORD OF ISSUE	BY	CHK	APP	FLM
5	07-01-87	CONFORMED TO CONSTRUCTION RECORDS	PCB	NJA	LJS	HL
4	03-17-86	ADDED LINE CODES AND REVISED VALVE OPERATORS	PCB	NJA	LJS	HL
3	05-10-85	APPROVED FOR CONSTRUCTION SPEC 74.0201	NJA	LJS	HL	
2	01-18-85	GENERAL REVISIONS	NJA	LJS	HL	
1	09-14-84	APPROVED FOR CONSTRUCTION SPECS 72.0202 & 72.0403	NJA	LJS	HL	
0	02-24-84	INITIAL ISSUE	NJA		HL	

I HEREBY CERTIFY THAT THIS DOCUMENT WAS PREPARED BY ME OR UNDER MY DIRECT SUPERVISION AND THAT I AM A DULY REGISTERED PROFESSIONAL ENGINEER UNDER THE LAWS OF THE STATE OF UTAH

SIGNED

DATE 3-18-83 REG NO. 5746

BLACK & VEATCH CONSULTING ENGINEERS

ENGINEER NJA | DRAWN AGG | CHECKED LJS | DATE 09-07-84

IPP INTERMOUNTAIN POWER PROJECT

PIPING AND INSTRUMENT DIAGRAM
TURBINE SEALS AND DRAINS

PROJECT 9255 | DRAWING NUMBER 2TGC-M2080A | REV 5

CODE TGC-52.6203

AREA

5	07-01-87 CONFORMED TO CONSTRUCTION RECORDS GTB
4	03-17-86 ISSUED TO CONTR SPECS 72.0202,72.0403,74.0201 PCB
3	05-10-85 APPROVED FOR CONSTRUCTION SPEC 74.0201 DLS
3	05-10-85 ISSUED TO CONTR SPECS 72.0202,72.0403 NJA
2	01-18-85 ISSUED TO CONTR. SPECS. 72.0202,72.0403 NJA
1	08-14-84 APPROVED FOR CONSTRUCTION SPECS 72.0202 & 72.0403 NJA
0	03-09-84 ISSUED FOR BID SPEC. 72.0403 NJA
0	02-24-84 ISSUED FOR BID SPEC. 72.0202 RSP

9255-2TGC-M2080A
M2PD
10/23/87 23:05:24 ATSSK

IP7016747

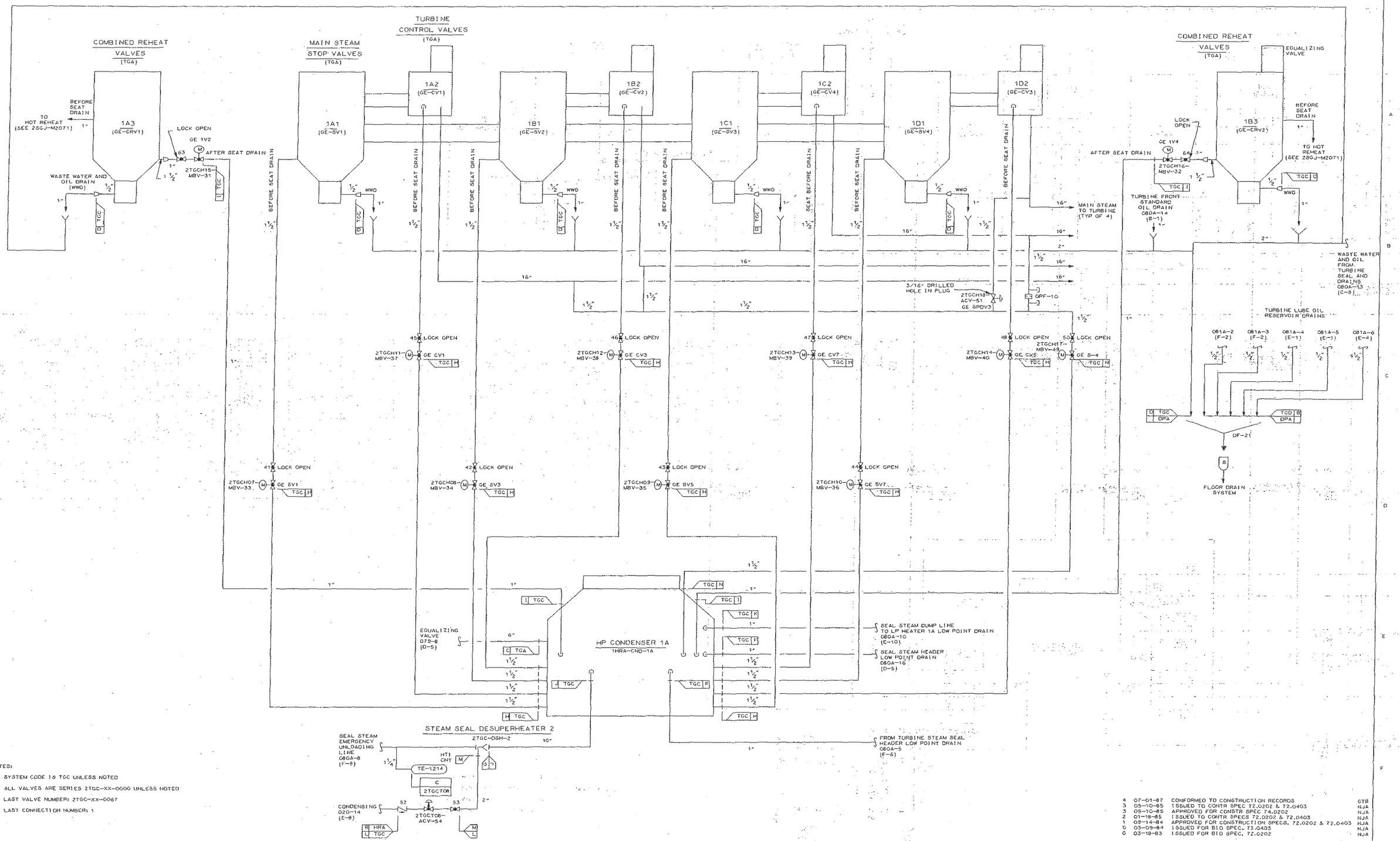

NOTES:

SYSTEM CODE IS TGC UNLESS NOTED

ALL VALVES ARE SERIES 2TGC-XX-0000 UNLESS NOTED

LAST VALVE NUMBER: 2TGC-XX-0067

LAST CONNECTION NUMBER: 1

REV	DATE	DESCRIPTION	BY
4	07-01-87	CONFORMED TO CONSTRUCTION RECORDS	GTB
3	05-10-85	ISSUED TO CONTR SPEC 72.0202 & 72.0403	NJA
3	05-10-85	APPROVED FOR CONSTR SPEC 74.0202	NJA
2	01-18-85	ISSUED TO CONTR SPECS 72.0202 & 72.0403	NJA
1	09-14-84	APPROVED FOR CONSTRUCTION SPECS. 72.0202 & 72.0403	NJA
0	03-09-84	ISSUED FOR BID SPEC. 72.0403	NJA
0	03-18-83	ISSUED FOR BID SPEC. 72.0202	NJA

NO.	DATE	REVISIONS AND RECORD OF ISSUE	BY	CH	AP	FLM
3	05-10-85	APPROVED FOR CONSTRUCTION SPEC 74.0202	NJA	LJS	HL	
2	01-18-85	GENERAL REVISIONS	NJA	LJS	HL	
1	09-14-84	APPROVED FOR CONSTRUCTION SPECS. 72.0202 & 72.0403	NJA	LJS	HL	
0	02-24-84	INITIAL ISSUE	NJA		HL	
4	07-01-87	CONFORMED TO CONSTRUCTION RECORDS				

I HEREBY CERTIFY THAT THIS DOCUMENT WAS PREPARED BY ME OR UNDER MY DIRECT SUPERVISION AND THAT I AM A DULY REGISTERED PROFESSIONAL ENGINEER UNDER THE LAWS OF THE STATE OBTAIN

SIGNED

DATE 3-18-83 REG NO. 5746

BLACK & VEATCH CONSULTING ENGINEERS

ENGINEER NJA | DRAWN AGG

CHECKED LJS | DATE 09-07-84

IPP INTERMOUNTAIN POWER PROJECT

PIPING AND INSTRUMENT DIAGRAM
TURBINE SEALS AND DRAINS

PROJECT 9255 | DRAWING NUMBER 2TGC-M2080B | REV 4

CODE TGC-52.6203

AREA

9255-2TGC-M2080B
NJA
10/30/87 17:40:04 ATSSK

IP7016748