of IPA, IPSC, or the Operating Agent and shall be under the control of IPSC only to provide the services requested and not as to the means or manner by which the Work is to be accomplished. Contractor has no authority to act for, bind, or legally commit IPA, IPSC, or the Operating Agent in any way.

15. Drug Policy: Contractor shall submit a current copy of its drug policy for review. IPP facilities are a drug free and zero tolerance workplace. Contractor's employees and its subcontractors' employees who are to perform Work or otherwise be at the IPP facilities shall participate in a drug testing program prior to arrival, and at any additional time(s) during the Contract as IPSC may request.

16. Security and Safety Compliance: Contractor and its employees, agents, representatives, and/or subcontractors, while performing Work on IPP premises, or who are otherwise on IPP premises, shall fully comply with all security, fire prevention, and safety rules and procedures in force at IPP. IPSC has the right (but not duty) to make periodic and random inspections of the persons, and of their respective property, upon entering, at any time while on, and when departing any IPP facility. Such persons subject to inspection include Contractor, any subcontractor, and their respective employees, agents, and representatives. Property subject to inspection includes, but is not limited to, vehicles, clothing, toolboxes, lunch boxes, any other carrying case, tools or equipment, and anything contained therein. If violations are noted, the violations will be reported to Contractor's on-site supervisor and the Contract Administrator for appropriate action.

All Contractor's employees will be given security identification badges by IPSC and those badges shall be displayed each day to allow admittance on IPP premises. Contractor's employees who do not have security identification badges in their possession, will not be allowed on site unless signed in by the Contract

Administrator. All security badges shall be returned to the Security Contractor when the employee terminates their work at this site. All Contractor's vehicles will also receive parking stickers from the Security Contractor allowing entrance on IPP premises. Temporary badges and parking stickers are available for intermittent Contractor employees and vehicles.

Contractor shall have access on IPP premises between the hours of 7:00 am to 7:00 pm Monday through Friday. Access may be allowed on weekends or at other times with the approval of the Contract Administrator.

Contractor will be directed to specified areas for parking vehicles and equipment by the Contract Administrator. Certain areas of IPP premises are restricted to IPSC vehicles only. Exceptions to the parking restriction will be made on an as needed basis through Contractor's respective Contract Administrator. Contractor shall make its employees, agents, representatives, and/or subcontractors aware of all areas that are subject to restricted parking.

Contractor agrees, warrants, and represents that (a) it is familiar with the risks of injury associated with the Work and otherwise being on IPP premises, (b) has reviewed the Work to be performed, (c) has inspected the IPP Work site with an IPSC representative, and (d) has determined that no unusual or peculiar risk of harm exists with regard to the Work to be performed on IPP premises. Contractor further agrees that it shall, at all times, provide on IPP premises, a competent supervisor(s) familiar with IPSC's and the industry's safety standards to ensure compliance with all federal, state, and local regulations pertaining to safety (including, but not limited to, Federal and State OSHA, as said regulations relate to the Work to be performed under the Contract). Although IPSC assumes no responsibility to oversee or supervise the Work, IPSC reserves the right to review safety programs and practices and to make recommendations to Contractor. No such review or recommendation by IPSC shall impose

any liability or responsibility on IPSC, or relieve Contractor from providing a safe working environment and complying with all legal requirements.

Contractor shall comply with IPSC's safety and equipment requirements prior to starting the Work. Worker protective clothing, which includes, but is not limited to, hardhats, safety glasses, safety shoes, gloves, respirators, earplugs, safety harnesses, and face shields shall be provided by Contractor.

Prior to starting the Work, all of Contractor's personnel shall attend a safety orientation taught by a representative of IPSC. At Contractor's option and subject to IPSC approval, a supervisor of Contractor may attend the orientation taught by IPSC, and then present the orientation to the remainder of Contractor's personnel. In that case, a roll shall be provided to IPSC which lists each person who received the orientation and the date it was received.

17. Nonexclusive: This is a nonexclusive Contract. IPSC reserves the right to obtain services, materials, equipment, or other Work from other vendors or suppliers.

Deleted: .

Formatted

PART E - DIVISION E2

ADDITIONAL GENERAL CONDITIONS

1. Guarantee: Contractor guarantees and warrants for a minimum period of one (1) year after final startup testing and acceptance of each drive system, and for such longer period as may be specified by the applicable statute of limitations, that all services, materials, equipment, and other Work furnished are free from defects and otherwise conform to the terms of the Contract, including, but not limited to, the Article entitled "Materials and Work" in Part E, Division E1, General Conditions.

   Deleted: delivery

   Contractor shall repair or replace, as IPSC may direct, all defective services, materials, equipment, or other Work. Such repair or replacement shall be F.O.B. at such destination as IPSC may direct (contract delivery point, point of installation, point of consumption, etc.). IPSC's right to demand repair or replacement is in addition to any other remedies that may be available for breach of the foregoing guarantee and warranty.

   Contractor shall, for the protection and benefit of IPA, IPSC, and LADWP, obtain guarantees conforming to the foregoing two paragraphs from each of its vendors and subcontractors with respect to their material, equipment, services, or other portion of the Work. Such guarantees from vendors and subcontractors shall be in addition to, and not in lieu of, Contractor's own guarantees.

2. Payment: Payment will be made within thirty (30) calendar days after delivery and receipt of the invoice in the form directed by IPSC.

3. Work Slips and Invoices: Contractor shall furnish Work slips suitable for recording (e.g., - the weight of concentrated sulfuric acid in tons), at the time of each delivery. IPSC may direct the form of Work slips to be used. Accuracy of completed Work slips shall be subject to verification by IPSC, who will retain the original copies.

IP7014152

Deleted:

Formatted

At the expiration of each calendar month during which material or other Work is delivered, Contractor shall render an invoice and copies of signed Work slips (e.g., - the total weight of acid) delivered during said month.

Invoices shall be submitted in duplicate to Accounts Payable, Intermountain Power Service Corporation, 850 West Brush Wellman Road, Delta, UT 84624-9546. All letters pertaining to invoices shall be addressed to the foregoing address.

IPSC may direct the form of invoice to be used. All invoices shall show the Contract number, release number, or other identification of each delivery covered by the invoice. In all cases, the amount of the applicable sales tax or use tax shall be separately stated on the invoice.

4. Regulations, Permits, Licenses, and Warrants: Contractor shall comply with all applicable federal, state, and local regulations including, but not limited to, Federal and State OSHA, as said regulations relate to the Contract, Contractor's performance, or Contractor's trade. In addition, Contractor shall ensure that all permits, licenses, and warrants relating to the Contract, Contractor's performance, and Contractor's trade be acquired.

5. Letters to IPSC: All inquiries relating to these Specifications prior to award of Contract shall be addressed to the Buyer.

After award of Contract, all letters pertaining to performance of the Contract (other than invoice) shall be addressed as follows:

President and Chief Operations Officer
Intermountain Power Service Corporation
850 West Brush Wellman Road
Delta, UT 84624-9546

Attention: Contract Administrator

IP7014153

Regarding **Contract No.** 133101.63.2203.1

Deleted:

Deleted: Bold

Formatted

IP7014154

PART F - DIVISION F1

DETAILED SPECIFICATIONS - SPECIAL CONDITIONS

1. General: Under the terms of the Contract, Contractor shall furnish and deliver Variable Frequency I. D. Fan Drives ordered by IPSC during the specified period beginning with date stated in the first introductory paragraph of the Contract Agreement (hereinafter called the Contractual Period).

2. Quantity: IPSC agrees to purchase the specified variable frequency I. D. fan drive systems during the Contractual Period.

   In consideration of the above agreed purchase quantity, and as an additional consideration thereto, IPSC, shall during the Contractual Period have the option (but not duty) of purchasing additional quantities of the specified variable frequency I. D. fan drive systems up to IPSC's maximum requirements for operation and storage during the Contractual Period. Said option may be exercised, in whole or in part, by the issuance to Contractor of releases for any portion thereof by the Buyer or the Buyer's duly authorized representative. Nothing contained herein shall require IPSC to order any of its requirements beyond the approximate quantities stated in Division A1 from Contractor as opposed to from other suppliers or contractors.

3. Delivery: Contractor shall make deliveries only upon receipt of releases issued by the Buyer or a duly authorized representative. IPSC reserves the right to specify in said releases the amounts and dates of deliveries at the locations described in the Proposal Schedule; provided, however, that no release will specify a single delivery of less than two variable frequency I. D. fan drive systems. IPSC requires delivery as specified after the date of issuance of such releases.

Deleted:
Deleted: Bold
Formatted
Deleted: of
Deleted: Bold
Formatted
Deleted: Bold
Formatted
Deleted: ¶
Deleted: within
Formatted
Deleted: working days

IP7014155

Deliveries shall be made between the hours of 8:00 a.m and 3:00 p.m., except holidays, Monday through Friday, unless other arrangements are made in writing between Contractor and Buyer.

4. Printed Documents: All printed documents, including drawings and instruction books, if applicable, shall be in the English language. All units of measurement shall be in the English foot-pound-second system.

5. Delivery Arrangements: After award of the Contract and prior to delivery or other performance of any Work, Contractor shall become familiar with the unloading facilities at the delivery point(s) set forth in the Proposal Schedule, either by personal inspection or by contacting the Contract Administrator, (435) 864-4414.

6. Option to Renew: IPSC has the right and option at any time during the original term of the Contract to renew the Contract for a period of 2 years from the date of scheduled expiration of the original term of the Contract.
In the event that said option is exercised by IPSC, it will be exercised by the issuance and delivery to Contractor of a written order therefor by the Buyer or his duly authorized representative. The Contract executed for the original Contract period shall remain in full force and effect for any such extended or option period, at the same prices and under the same terms and conditions for such extended or option period.

7. Indemnity Clause: Contractor undertakes and agrees to indemnify, hold harmless, and at the option of the IPA, defend IPA, IPSC, LADWP, and any and all of their boards, officers, agents, representatives, employees, assigns, and successors in interest from and against any and all suits and causes of action, claims, charges, costs, damages, demands, expenses (including, but not limited to, reasonable attorneys' fees and cost of litigation), judgments, civil fines and penalties, liabilities or losses of any kind or nature, including,

IP7014156

but not limited to, violations of regulatory law, breach of contract, death, bodily injury or personal injury to any person, including Contractor's employees and agents, or damage or destruction to any property of either party hereto, or of third persons, arising in any manner by reason of or incident to the performance of the Contract on the part of Contractor, or Contractor's officers, agents, employees, or subcontractors of any tier, except as may be caused by the sole negligence of IPA, IPSC, LADWP, or their boards, officers, agents, representatives, or employees.

8. Insurance Requirements: Prior to the start of the Work, but not later than thirty (30) calendar days after date of award of Contract, Contractor shall furnish IPSC evidence of coverage from insurers acceptable to IPSC and in a form acceptable to IPSC's Insurance Analyst. Such insurance shall be maintained by Contractor and at Contractor's sole cost and expense.

Such insurance shall not limit or qualify the liabilities and obligations of Contractor assumed under the Contract. IPA, IPSC, or LADWP shall not, by reason of any of their inclusion under these policies or otherwise, incur liability to the insurance carrier for payment of the premium for these policies.

Any insurance carried by IPA, IPSC, or LADWP which may be applicable is and shall be deemed excess insurance, and Contractor's insurance is and shall be primary for all purposes despite any provision in Contractor's policies to the contrary.

Should any portion of the required insurance be on a "Claims Made" policy, Contractor shall, prior to the policy expiration date following completion of the Work, provide evidence that the "Claims Made" policy has been renewed or replaced with the same limits and terms and conditions of the expiring policy at least for the Contract under which the Work was performed.

a. Workers' Compensation/Employer's Liability: Workers' Compensation Insurance covering all of Contractor's employees in accordance with the laws of all states in which the Work is to be performed and including Employer's Liability Insurance, and as appropriate, Broad Form All States Endorsement, Voluntary Compensation, Longshoremen's and Harbor Workers' Compensation, Jones Act, and Outer-Continental Shelf coverages. The limit for Employer's Liability coverage shall be not less than $1 million each accident and shall be a separate policy if not included with Workers' Compensation coverage. Evidence of such insurance shall be an endorsement to the policy providing for a thirty (30) calendar days prior written notice of cancellation or nonrenewal of a continuous policy to IPSC, by receipted delivery, and a Waiver of Subrogation in favor of IPA, IPSC, and LADWP, its officers, agents, and employees. Workers' Compensation/Employer's Liability exposure may be self-insured provided that IPSC is furnished with a copy of the certificate issued by the state authorizing Contractor to self-insure. Contractor shall notify IPSC, by receipted delivery, as soon as possible of the state withdrawing authority to self-insure.

b. Commercial General Liability: Commercial General Liability with Blanket Contractual Liability, Products and Completed Operations, Broad Form Property Damage, Premises and Operations, Independent Contractors, and Personal Injury coverages included. Such insurance shall provide coverage for total limits actually arranged by Contractor, but not less than $2 million Combined Single Limit and be specific for the Contract. Should the policy have an aggregate limit, such aggregate limits should not be less than $4 million. Umbrella or Excess Liability coverages may be used to supplement primary coverages to meet the required limits. Evidence of such

coverages shall be on IPSC's Additional Insured Endorsement Form or on an endorsement of the policy acceptable to IPSC and provide for the following:

(1) To include IPA, IPSC, LADWP, and their officers, agents, and employees as additional insured with the Named Insured for the activities and operations under and in connection with the Contract.

(2) That the insurance is primary and not contributing with any other insurance maintained by IPA, IPSC, or LADWP.

(3) A Severability-of-Interest or Cross-Liability Clause such as: "The policy to which this endorsement is attached shall apply separately to each insured against whom a claim is made or suit is brought, except with respect to the limits of the company's liability."

(4) That the policy shall not be subject to cancellation, change in coverage, reduction of limits or nonrenewal of a continuous policy, except after written notice to IPSC, by receipted delivery, no less than thirty (30) calendar days prior to the effective date thereof.

(5) A description of the coverages included under the policy.

c. Commercial Automobile Liability: Commercial Automobile Liability covering the use of owned, nonowned, hired, and leased vehicles for total limits actually arranged by Contractor, but not less than $1 million Combined Single Limit. Such insurance shall include Contractual Liability coverage. The method of providing evidence of insurance and requirements for additional insureds, primary insurance, notice of cancellation, and Severability-of-Interest shall

be the same as required in the Commercial General Liability Section of terms and conditions.

d. Professional Liability: Contractor shall provide Professional Liability Insurance with Contractual Liability coverage included, covering Contractor's liability arising from errors and omissions made directly or indirectly during the execution and performance of the Contract and shall provide coverage of $5 million Combined Single Limit. Evidence of such insurance shall be in the form of a special endorsement of insurance and shall include a Waiver of Subrogation against IPA, IPSC, and LADWP, their officers, agents, and employees.

The policy shall not be subject to cancellation, change in coverage, reduction of limits, or nonrenewal of a continuous policy, except after written notice to IPSC, by receipted delivery, not less than thirty (30) calendar days prior to the effective date thereof.

e. Other Conditions:

(1) Failure to maintain and provide acceptable evidence of any of the required insurance for the required period of coverage shall constitute a major breach of Contract, upon which IPSC may immediately terminate or suspend the Contract. In addition or in the alternative, IPSC has the right (but not duty), to procure such insurance and (a) to submit a claim for the cost thereof against any Performance Bond supplied by Contractor, (b) to deduct the cost thereof from any monies due Contractor under the Contract or otherwise, and/or (c) to charge and collect the cost thereof from Contractor, payable upon demand. Such claim, deduction, or charge shall include an administrative fee of two (2) percent of the cost of procuring said insurance. Said insurance may be procured and

maintained in the name of Contractor, IPA, IPSC, LADWP, and/or any combination thereof, as primary and/or secondary insured, all as IPSC may from time to time elect.

(2) Contractor shall be responsible for all subcontractors' compliance with these insurance requirements. The foregoing remedies in subsection (1) shall be available to IPSC against Contractor for any failure by any subcontractor to maintain and provide the required insurance.

9. Transportation: All shipments of hazardous materials under the Contract or in connection herewith shall be handled in accordance with current U.S. Department of Transportation regulations and all other applicable federal, state, and local laws and regulations.

10. Material Safety Data Sheets: Contractor shall furnish IPSC with a Material Safety Data Sheet (MSDS) for all hazardous materials furnished under the Contract, used, stored, or transported on or near IPP premises in connection with the Contract. The MSDS shall be furnished to IPSC on, or prior to, the date of the first delivery, use, storage, or transportation of the materials or equipment. If these Specifications require that Contractor furnish instruction books, the MSDS shall also be included in such books.

11. Contract Termination:

a. For Convenience or Security: IPSC reserves the right, by giving twenty (20) calendar days prior written notice (or such longer notice as IPSC may select) to Contractor, to terminate the whole or any part of the Contract at IPSC's convenience, whether or not Contractor is in default. IPSC also reserves the right to terminate the Contract, effective immediately upon notice, for purposes of security or safety of IPP facilities, persons who work at IPP facilities, or the public. In the

event of termination for convenience, security, or safety, IPA will pay Contractor reasonable and proper termination costs (if, however, Contractor's Proposal includes cancellation charges, payment for termination costs shall not exceed the cancellation charges set forth therein). Contractor shall, after consultation with IPSC, take all reasonable steps to minimize the costs related to termination. Contractor shall provide IPSC with an accounting of costs claimed, including adequate supporting information and documentation and IPSC may, at its expense, audit the claimed costs and supporting information and documentation.

b. For Breach: IPSC may terminate the whole or any part of the Contract effective immediately upon notice, in the event Contractor is in material default, and without right on the part of Contractor to claim any termination costs. This right to terminate is in addition to, and not in lieu of, any other remedy provided in the Contract or otherwise provided by law or equity.

c. Limitation of Liability: In no event shall termination of this Contract, or any portion thereof, whether for convenience, security, safety, breach, or otherwise, constitute the basis for or result in any claim for consequential damages (including loss of anticipated profits or other economic damages) or punitive damages, and Contractor hereby releases IPA, IPSC, and LADWP, and their officers, directors, employees, agents, and representatives, from any and all such claims or liability.

12. Suspension of Work: IPSC reserves the right to suspend and reinstate execution of the whole or any part of the Contract and the Work without invalidating the provisions of the Contract. In the event the Work is suspended, Contractor will be reimbursed for actual direct unavoidable costs that it reasonably incurs as a

result of the suspension. Claims for such cost reimbursement shall be submitted by invoice. Contractor shall use all reasonable means to minimize such costs, and shall allow IPSC to audit costs claimed. Contractor shall, upon request by IPSC, provide a projection of costs it anticipates to incur during any suspension, or continuation of suspension, contemplated by IPSC. In no event shall suspension constitute the basis for, or result in, any claim for consequential damages (including loss of anticipated profits or other economic damages) or punitive damages, and Contractor hereby releases IPA, IPSC, and LADWP, and their officers, directors, employees, agents, and representatives, from any and all such claims or liability.

13. No Waiver: No breach, noncompliance, or other failure to perform (collectively "breach") by Contractor, or any subcontractor, or of any Work shall be deemed waived unless expressly waived in writing by the President and Chief Operations Officer. No waiver by IPSC of any one breach shall be deemed to waive any other prior, concurrent, or subsequent breach. No exercise, or failure to exercise, or delay in exercising any particular remedy by IPSC shall be deemed a waiver or preclude IPSC from subsequently invoking that remedy for that breach or any other breach. All remedies granted to IPSC in the Contract, or by law or equity, are cumulative and may be exercised in any combination or order.

IP7014163

PART F - DIVISION F2

DETAILED SPECIFICATIONS - DETAILED REQUIREMENTS

Formatted

INTERMOUNTAIN POWER PROJECT

DELTA, UTAH

INTERMOUNTAIN GENERATING STATION

SPECIFICATIONS AND DOCUMENTS
FOR
VARIABLE FREQUENCY
I. D. FAN DRIVES

Deleted: ADJUST

SPECIFICATION 133101.63.2203.1

TABLE OF CONTENTS

	Page	thru Page
I. BIDDING REQUIREMENTS		
Proposal Data	PD-1	PD-6
II. SPECIFICATIONS		
Part 1 - GENERAL REQUIREMENTS		
Section		
1A - General Description and Scope of the Work	1A-1	1A-13
1B - General Equipment Specifications	1B-1	1B-35
1C - Engineering Data	1C-1	1C-11
1Q - General Quality System Requirements	1Q-1	1Q-3
1S - Seismic Design	1S-1	1S-6
Part 2 - TECHNICAL REQUIREMENTS		
Section		
2A - Medium Voltage Variable Frequency Drives	2A-1	2A-27
2B - VFD Isolation (VFDI) Transformers	2B-1	2B-11
2C Medium Voltage Induction Motors	2C-1	2C-14
Drawing List	1 page	

Deleted: 5
Deleted: 2
Deleted: 4
Deleted: 0
Deleted: 4
Deleted: 7
Deleted: 100702

IP7014164

PROPOSAL DATA

PD.1 GENERAL. Each bidder shall submit complete and definitive information on his offering in sufficient detail to permit a complete analysis of the Proposal. The requirements stated in the Instructions to Bidders relative to information submittal shall be followed.

The requirements for information contained in this section are basic requirements. Additional information shall be provided as requested by the Engineer.

The blank data sheets included in this section shall be completely filled in. The data listed therein shall not relieve the Contractor of his responsibility for meeting the requirements of the detailed specifications.

Deleted: Supplier

The bidder shall not alter the original Proposal Data section page numbers. If it becomes necessary to add pages, at other than the end of the section, a suffix such as a, b, c, etc., shall be added to the original number to designate the added page number. Pages added at the end of the section shall be numbered sequentially by continuation of originally established numbering.

If the bidder finds it necessary to reproduce any of the Proposal Data pages, methods of reproduction shall not appreciably reduce or enlarge the reproduced pages. In the process of preparing the bid evaluation, the right-hand portion of Proposal Data pages which have a trim line will be trimmed off and matched with corresponding pages received from other bidders. It is therefore desirable that these pages match as nearly as practicable with the original left-hand portion of the page when placed side by side. The bidder shall make no changes to the left of the trim line.

Where alternates are indicated in the Proposal or Proposal Data, the bidder shall provide complete information for each alternate.

Write entries boldly with black ink or type entries using black ink. Do not use ballpoint pens or blue ink.

PD.2 DRAWINGS. Drawings shall be submitted with the Proposal in sufficient detail to permit evaluation of the equipment offered and to permit preliminary arrangement studies to be made:

> Plan views of the existing control house indicating equipment layout. Outdoor cooling equipment, if required, shall also be shown. Provide estimated weights.

Deleted: 100702

IP7014165

External interconnection one-line diagram showing all power, control, and protection cabling required to complete the VFD onsite.

Harmonic study.

PD.3 SUPPLEMENTARY INFORMATION. The following supplementary information shall be submitted with the Proposal:

Complete description of proposed variable frequency drive. This shall include a description of shipping components and field assembly installation.

Summary description of codes and standards used if different than specified, including a review of major differences.

Identification of any modifications required to IPSC's ID fan system, composed of ID fan motor, ID fan, connecting shaft, bearings, and cable connecting the ID fan motor to the VFD system to allow this equipment to operate with the VFD while maintaining a normal 30 year lifetime of the ID fan system.

Deleted: the Purchaser

Documentation indicating the Contractor's VFD system does not produce torsional vibrations, shaft torsional resonance, or torque pulsations within the connecting shaft of the ID fan system.

Deleted: Supplier

Documentation indicating the Contractor's VFD system will not create accelerated ID fan system bearing wear due to common mode voltages delivered by high frequency PWM or other signals from the Contractor's inverter drive.

Deleted: Supplier

Deleted: Supplier

Documentation indicating the Contractor's VFD system does not contribute to insulation breakdown of the end turns of the motor winding.

Deleted: Supplier

Provide names and other contact information of five purchasers of the proposed VFD system applied to motors of 3,000 hp and above who have had the equipment installed and operating for at least 2 years.

Preliminary spare parts list.

Input current including harmonic content at 25, 50, 75, and 100 percent load.

Provide composite data on mean time to failure and mean time to repair for typical components contained within the VFD system and shown by operating experience to fail or require replacement.

Deleted: 100702

IP7014166

Provide a detailed description of the installation instructions of the proposed drive system including all of its components and any modifications to existing equipment.

Provide a description of the failure mode if control power is lost to the VFD control system.

Provide a description of the failure modes of the power switching devices (SCR, GTO, diode, IGBT, IGCT, etc.) or switching device control that will allow the drive system to continue to operate without tripping the fan.

Provide a description of accelerating and decelerating torque programming capabilities and other pertinent capabilities and limitations.

Preliminary schedule.

Harmonic calculation.

Efficiency (at the input to VFD isolation transformer) graph with Y-axis indicating 25, 50, 75, 100 percent torque and X-axis indicating 25, 50, 75, and 100 percent frequency.

Catalog brochures.

Complete list of required maintenance tools as discussed in Section 1B. The listing shall include a complete description and quantity of each item.

Information specified in the Instructions to Bidders.

Equipment storage requirements including inside or outside requirements, requirements for controlled temperature or humidity, etc.

Description of manufacturing, testing, and inspection procedures.

Written description, logic diagrams, or ladder diagram indicating recommended operating sequence.

Maintenance activities required by the manufacturer and/or by the Contractor to provide adequate storage and to maintain valid material and equipment warranties.

Deleted: Supplier

Motor Information from Article 2C.8.

Transformer Information from Article 2B.

Deleted: 100702

IP7014167

PD.4 EQUIPMENT AND MATERIAL DATA. The information required on the following pages is to assist the Engineer and IPSC in evaluating the Technical Proposal.

Deleted: Purchaser

The data listed herein is stated for definitive purposes and for the convenience of IPSC and the Engineer.

Deleted: the Purchaser

Deleted: 100702

IP7014168

_____
(Bidder's Name)

VFD isolation transformer rating (kVA) _____

System input voltage _____

System output voltage _____

Rated drive output power (continuous kVA) _____

Rated drive output current (continuous A) _____

Nominal load power (HP) _____

Rated VFD input current (A) _____

Nominal VFD input current at 8,200 hp output (A) _____

Deleted: 6,0

Drive type code/frame size _____

Rectifier pulse number _____

Auxiliary power consumption including pumps, lights, etc (kVA) _____

Fundamental VFD power factor at input to VFD

Isolation transformer

At 25 percent rated load _____

At 50 percent rated load _____

At 75 percent rated load _____

At 100 percent rated load _____

Total VFD power factor at input to VFD

Isolation transformer

At 25 percent rated load _____

At 50 percent rated load _____

IP7014169

	_____ (Bidder's Name)
At 75 percent rated load	_____
At 100 percent rated load	_____
Efficiency at input to VFD isolation transformer	
At 25 percent rated load	_____
At 50 percent rated load	_____
At 75 percent rated load	_____
At 100 percent rated load	_____
Maximum heat loss (kW)	_____
Control frequency range (Hz)	_____
Accuracy of speed control (percent of nominal speed)	_____

IP7014170

PART 1 - GENERAL REQUIREMENTS

TABLE OF CONTENTS

		Page
Section 1A - GENERAL DESCRIPTION AND SCOPE OF THE WORK		1A-1 thru 1A-13
1A.1	General	1A-1
1A.2	Work Included Under These Specifications	1A-2
1A.3	Miscellaneous Materials and Services	1A-4
1A.4	Work Not Included Under These Specifications	1A-5
1A.5	Supplier's Services	1A-5
1A.6	Mill and Factory Witness Tests	1A-8
1A.7	Schedule	1A-8
Section 1B - GENERAL EQUIPMENT SPECIFICATIONS		1B-1 thru 1B-35
1B.1	General	1B-1
1B.2	Referenced Standards	1B-1
1B.3	Materials and Equipment	1B-1
1B.4	Identification	1B-1
1B.5	Preshipment Inspection	1B-1
1B.6	Materials List	1B-2
1B.7	Hazardous Materials	1B-2
1B.8	Correction of Errors	1B-2
1B.9	Numbering System	1B-2
1B.10	Nameplates	1B-2
1B.11	Factory Assembly	1B-3
1B.12	Consolidated Shipments	1B-3
1B.13	Packaging and Identification of Spare Parts	1B-3
1B.14	Special Shipping Requirements	1B-4
1B.15	Welding	1B-4
1B.16	Service Conditions	1B-4
1B.17	Shop Coating	1B-4
1B.18	Protection	1B-6
1B.19	Tools	1B-6
1B.20	Alignment and Balance	1B-7
1B.21	Noise Level	1B-7
1B.22	Design Coordination	1B-7
1B.23	Lubrication	1B-7
1B.24	Enclosed Gear Drive Units	1B-7

Deleted: 2

Deleted: 4

Deleted: 4

Deleted: 100702

IP7014171

		Page
1B.25	Safety Guards	1B-8
1B.26	Shaft Couplings	1B-8
1B.27	Equipment Bases	1B-8
1B.28	Piping	1B-9
1B.29	Control Air Piping and Tubing	1B-9
1B.30	Instrument Primary Piping and/or Tubing	1B-10
1B.31	Instrument Valves	1B-12
1B.32	Compressed Air	1B-13
1B.33	Instrumentation	1B-13
1B.34	Control Power	1B-19
1B.35	Auxiliary Power	1B-20
1B.36	Raceway	1B-20
1B.37	Electrical Enclosures	1B-22
1B.38	Classification Identification of Electrical Equipment in Hazardous Areas	1B-23
1B.39	Wiring	1B-23
1B.40	Equipment Safety Grounding	1B-26
1B.41	Pin and Socket Connectors	1B-27
1B.42	Termination of 600 Volt Power Cable	1B-27
1B.43	Termination of Cables Rated Above 600 Volts	1B-28
1B.44	Terminal Blocks	1B-28
1B.45	Fuse Blocks	1B-29
1B.46	Fuses	1B-29
1B.47	Electrical Accessory Devices	1B-29
1B.48	Molded Case Circuit Breakers	1B-31
1B.49	Weatherproofing	1B-32
1B.50	Factory Prewired Electronic Systems Cabinets	1B-32
1B.51	Solid-State Logic Systems	1B-32
1B.52	Motor Control	1B-33
Typical Schematics for Combination Starters		1B-35

Section 1C - ENGINEERING DATA 1C-1 thru 1C-11

1C.1	General	1C-1
1C.2	Correspondence	1C-1
1C.3	Review of Engineering Data	1C-2
1C.4	Performance Curves	1C-2
1C.5	Design Data	1C-2
1C.6	Test and Inspection Data	1C-2
1C.7	Motor Information	1C-2
1C.8	Drawings	1C-2
1C.9	Wiring Diagrams	1C-4
1C.10	Instruction Manuals	1C-5
Motor Information Sheets		1C-9 thru 1C-11

Deleted: 0

Deleted: 3

Deleted: 4

Deleted: 100702

Deleted: 8

Deleted: 0

IP7014172

Page

Section 1Q - GENERAL QUALITY SYSTEM REQUIREMENTS		1Q-1 thru 1Q-3
1Q.1	Purpose/Scope	1Q-1
1Q.2	Quality System	1Q-1
1Q.3	Quality System Manual	1Q-2
1Q.4	Subcontractors	1Q-2
1Q.5	Inspections by Engineer	1Q-2
1Q.6	Receipt Inspection	1Q-3
Section 1S - SEISMIC DESIGN		1S-1 thru 1S-6
1S.1	General	1S-1
1S.2	Seismic Forces	1S-2
1S.3	Seismic Design	1S-2
1S.4	Documentation	1S-4
Site Meteorological and Seismic Data Sheet		1S-6

Deleted: 100702

IP7014173

Section 1A - GENERAL DESCRIPTION AND SCOPE OF THE WORK

1A.1 GENERAL. This section covers the general description, scope of the work, and supplementary requirements for equipment, materials, and services included under these specifications.

The equipment and materials covered by these specifications will be incorporated in the Intermountain Power Project Induced Draft Fan (IDF) Variable Frequency Drive (VFD) Replacement Project.

The Intermountain Power Project site is located at 850 West Brush Wellman Road, Delta, Utah 84624.

Deleted: A railroad siding may be available at the site for delivery of equipment and materials.

Existing System Description. The Intermountain Power Project (IPP) power plant consists of two 840 MW units. Intermountain Power Services Corporation (IPSC) is in the process of upgrading the units to 980 MW.

Deleted: 900

Each unit has four induced draft fans (IDF) rated 7415 hp at 954 rpm. The motors are six phase synchronous, eight pole, 3876 volt machines. Each motor has two three-phase windings. Winding 1 is phase shifted 30 electrical degrees from Winding 2. The motor windings are not reconnectable to change the motor voltage. Each motor is controlled by a pair of current source, load commutated inverter (LCI) variable frequency drives (VFD). Each drive has an input transformer to connect the 3876 volt drive to the 6900 volt circuit breaker. The transformer pairs are connected delta-delta and delta-wye such that the 6900 volt bus sees harmonics associated with 12-pulse rectification at full load of the drives. The motors and drives are about 20 years old and were manufactured by Westinghouse. The drive controls are a combination of analog and digital technologies. New System Requirements. The replacement equipment must include features that will fulfill the following needs/requirements:

Deleted: i

Deleted: and certain replacement parts are difficult to obtain.¶
¶

- Harmonic content on the 6900 volt bus must meet IEEE 519.
- Power factor at the 6900 volt feed to each ID fan shall be 0.95 or better.
- Existing fan capacities shall not be decreased.
- External controls and interlocks of the new equipment shall coordinate with the existing plant control system.
- New components proposed must not degrade rating or service life of existing components that are being reused.
- Extend service life of ID fan system.

Deleted: which

Deleted: 100702

IP7014174

- Equal or better reliability and maintainability of ID fan system.
- New equipment must fit in existing space.
- New equipment must allow any existing conduits that are encased in concrete to be reused for their same original purpose to minimize the installation costs.
- Equipment for two fans must be replaced and checked out during a scheduled 24-calendar day outage.

Formatted: Bullets and Numbering

Deleted: one

Long Range Goals. The replacement equipment shall have features that will provide or make provision for the following goals:

- Increased fan capacity to allow a 980 MW generating capacity with 3 fans operating with additional pollution control equipment added..
- Replace existing transformers.

Deleted: 900

1A.2 WORK INCLUDED UNDER THESE SPECIFICATIONS. The work under these specifications shall include furnishing FOB at the Intermountain Power Project Units 1 and 2 site the medium voltage variable frequency drives, and providing miscellaneous materials and services complete as specified herein and in accordance with the Contract Agreement.

Deleted: CIP

Deleted: Culley Station Unit 3

Deleted: Purchase Order documents defined in the article entitled PURCHASE ORDER DOCUMENTS of the General Conditions

All equipment and materials required for complete medium voltage variable frequency drive systems shall be furnished, except as specified otherwise in these specifications. The equipment, materials, and services to be furnished shall include, but not necessarily be limited to, the following major items:

The furnishing of all plant, labor, equipment, appliances, materials, software, training, and the performance of all operations in connection with the analysis or study, design, fabrication, testing, delivery, field setup, and field checkout of integrated medium voltage variable frequency drive (VFD) systems, to operate the ID fans. Each set shall be an engineered system composed of input switchgear, a variable frequency drive, self-contained closed cycle cooling system, and output connections to an existing ID fan motor. Drive equipment shall be housed in the existing control building. Equipment and software furnished shall be suitable for powering IPSC's ID fan motors or new motors provided by the Contractor. The Contractor shall identify any modifications required to IPSC's ID fan system, composed of ID fan motor, ID fan, connecting shaft, bearings, and cable connecting the ID fan motor to the VFD system to allow this equipment to operate with the VFD and still maintain a normal lifetime of the ID fan system. The Contractor shall also provide services to coordinate the proper selection of IPSC's ID fan system and programming of the VFD software. This includes, but is not limited to,

Deleted: the

Deleted: Purchaser's

Deleted: Supplier

Deleted: Supplier

Deleted: the

Deleted: Purchaser's

Deleted: Supplier

Deleted: the

Deleted: Purchaser's

Deleted: 100702

IP7014175

coordination of information transfer associated with IPSC's ID fan system, such as WK^2 of the fan, critical speeds, starting/running torque, and meetings with the new or existing fan motor supplier.

Deleted: the

Deleted: Purchaser's

Each variable frequency drive system shall consist of all system components required to meet the performance, protection, safety, testing, and certification criteria of these specifications. These components may include incoming harmonic filter/power factor correction unit, input isolation transformer, VFD converter/DC-link/inverter, and output filter. The VFD system shall represent a fully integrated package. All material and labor necessary to interconnect any VFD system elements shall be included, even if shipped separately, except as specified otherwise herein. The VFD shall be sized to operate the motor continuously at the horsepower rating multiplied by the motor service factor.

It is intended that the Contractor's standard product, with available options, be provided under this specification. Any modifications to a standard product provided to meet this specification shall be performed by the Contractor only. The Contractor shall explicitly indicate all exceptions or deviations to this specification in his proposal where identified in the Proposal Section. Only exceptions or deviations identified in the Proposal Section will be considered for negotiation and possible inclusion in the conformed contract.

Deleted: Supplier

Deleted: Supplier

Deleted: Supplier

Deleted: on page P-1

Deleted: on page P-1

The main VFD system components shall be completely factory prewired, assembled, and then tested as a complete package by the Contractor, to assure a properly coordinated, fully integrated drive system.

Deleted: Supplier

The Contractor shall conduct a certified startup of all Contractor-furnished equipment to confirm conformance to this specification.

Deleted: Supplier

Deleted: Supplier

Any third party certification, safety or protection requirements shall be applied to the VFD system as a whole. Certification or protection of system elements or individual components by themselves is not acceptable.

IPSC will test the equipment after erection to demonstrate its ability to operate under the conditions and fulfill the guarantees as set forth herein. If the tests indicate that the equipment fails to meet guaranteed performance, the Contractor shall make additional tests and modifications until the equipment performs as specified.

Deleted: The equipment will be tested by the Purchaser

Deleted: Supplier

Deleted: in accordance with the procedures stated in the article entitled Performance of the Supplementary Terms and Conditions

The Contractor shall provide drawings and other engineering data, manufacturer's field services, tools, instruction manuals, recommended spare parts list, and miscellaneous materials and services, and shall participate in design conferences, all as specified herein.

Deleted: Supplier

Deleted: 100702

IP7014176

Equipment, materials, and accessories furnished shall be delivered to the Intermountain Power Project site where they will be received, unloaded, stored, and erected under separate Purchase Order. Deficiencies shall be sufficient cause to reject equipment. Unloading from carrier and storing will not constitute acceptance.

1A.3 MISCELLANEOUS MATERIALS AND SERVICES. Miscellaneous materials and services not otherwise specifically called for shall be furnished by the Contractor in accordance with the following:

Deleted: Supplier

All nuts, bolts, gaskets, special fasteners, backing rings, etc., between components and equipment furnished under these specifications.

All piping integral to or between any equipment furnished under these specifications, except as otherwise specified.

All necessary connections for IPSC's piping and instruments.

Deleted: the

Deleted: Purchaser's

All necessary instrument, power and control wiring and raceways integral to any equipment furnished under these specifications. This shall include terminal blocks and internal wiring to these terminal blocks for equipment requiring external connection.

Coupling guards for all exposed shafts and couplings.

Leveling blocks, soleplates, thrust blocks, matching blocks, and shims.

Erection drawings, prints, information, instructions, and other data for use by IPSC's erection subcontractor.

Deleted: the

Deleted: Purchaser's

Detailed storage requirements and lubrication requirements (including frequencies) for use by IPSC's erection subcontractor.

Deleted: the

Deleted: Purchaser's

All special tools or lifting beams and lugs for offloading.

The use of all special tools required for erection of the equipment, exclusive of the maintenance tools specified to be furnished under Section 1B. Erection tools shall remain the property of the Contractor and all shipping costs to and from the jobsite shall be at the Contractor's expense.

Deleted: Supplier

Deleted: Supplier

1A.4 WORK NOT INCLUDED UNDER THESE SPECIFICATIONS. Purchaser will furnish the following items of work:

Deleted: T

Deleted: will be furnished by the Purchaser:

ID fan system, composed of ID fan motor (if existing motor is used), ID fan, connecting shaft, bearings, and cable connecting the ID fan motor for each ID

Deleted: 100702

IP7014177

fan. The connecting cable will be shielded 8 kV Type MV-90 single conductor medium voltage power cable. The WK^2 of the fan is 347,700 lb-ft^2. The fan is a variable torque load. High breakaway/starting torque is required.

One or two 6.9 kV incoming power feeds to each Contractor-furnished VFD system.

Deleted: Supplier

One 125 volt dc power feed to each Contractor-furnished VFD.

Deleted: Supplier

Deleted: house.

Control wiring from IPSC's plant control system to the VFD control system.

Deleted: the

Deleted: Purchaser's

Deleted: DCS

Supply and installation of power cables as required to interconnect the VFDs, isolation transformers, input circuit breakers, and ID fan motors.

Receiving, unloading, storing, and field erection of all equipment.

Motor controls and starters not otherwise specified to be furnished under these specifications.

Foundations, foundation bolts, bolt sleeves, and equipment bases.

Grouting materials and the placing thereof.

Permanent electric wiring to connect equipment terminal boxes to the plant electrical system.

Lubricants and fuels for operation.

Solvents and cleaning materials.

Finish painting of all equipment except as specified herein.

Operating personnel for startup and tests.

1A.5 CONTRACTOR'S SERVICES. The services called for in WORK INCLUDED UNDER THESE SPECIFICATIONS shall be in accordance with the following.

Deleted: SUPPLIER

1A.5.1 Submittal of Engineering Data. Drawings and other engineering data for the specified equipment and materials are vital to the design and subsequent construction of the entire project.

The Contractor will be required to submit drawings and engineering data in accordance with the schedule and requirements specified herein to assure compliance with the overall construction and operating schedule.

Deleted: Supplier

Deleted: 100702

IP7014178

The Contractor shall allow a reasonable amount of time for mailing, processing, and Engineer's review of drawings and data in his engineering schedule and procurement/production/ shipping schedule.

Deleted: Supplier

1A.5.2 Manufacturer's Technical Services. The Contractor shall furnish the services of one or more manufacturer's technical service representatives. The service representatives shall be technically competent, factory trained, experienced in the installation and operation of the equipment, and authorized by the manufacturer to perform the work stipulated.

Deleted: Supplier

The Contractor shall also furnish the field services of direct representatives of the manufacturers of auxiliary equipment which has rotating parts or which may require field inspection and adjustment to assure proper operation.

Deleted: Supplier

The manufacturer's technical service representatives shall furnish written certification to the Engineer that the equipment has been inspected and adjusted by them or under their direction and that it is ready for service, all of which shall be done before initial operation of the equipment.

The duties of manufacturer's technical service representatives may include, but may not be limited to, the following:

a. Providing technical advice to assist the erection supplier in installing the equipment.

b. Inspecting and testing the equipment after installation and directing any changes or adjustments required to assure proper operation.

c. Providing technical direction during startup and initial operation of the equipment.

d. Directing the correction of any design or manufacturing errors.

e. Instructing IPSC's personnel in the operation and maintenance of the equipment.

Deleted: the

Deleted: Purchaser's

f. Providing services required as a condition to providing the warranties and guarantees specified.

For each pair of variable frequency drive systems, the lump sum prices stated in the Proposal shall include 24 days of service and two round trips to the site for the field service representatives, to provide the services specified under Items (a), (b), (c), and (f) above. If the number of days of service and/or the number of round trips actually required under Items (a), (b), (c), and (f) are more or less than the specified quantities, the Purchase Order

Deleted: T

Deleted: 15

Deleted: 100702

IP7014179

amount will be increased or decreased in accordance with the adjustment prices for manufacturer's technical services stated in the Proposal.

When, in the judgment of the Engineer, field service representative's time is required under Item (d) above solely and expressly for the purpose of correcting design or manufacturing errors, no payment will be made, nor will the time spent at the site while correcting such errors apply toward the days of service or round trips specified for Items (a), (b), (c), and (f) above.

When additional field service representative's time is required by JPSC under Item (e) above, the per diem rates for service time plus the rate for each round trip will be paid in accordance with applicable adjustment prices for manufacturer's technical services as stated in the Proposal.

Deleted: the Purchaser

The per diem rates shall include all costs associated with the service representative's work at the site, including local travel, local travel time wages, and living expenses. The round trip rate shall include all expenses for travel to and from the manufacturer's facilities and JPSC's site, including any salary costs for travel time. JPSC will not reimburse Contractor for air fare costs exceeding tourist class air fare unless unusual circumstances exist. The Contractor shall notify the Engineer of such circumstances.

Deleted: the

Deleted: Purchaser's

Deleted: The Purchaser

Deleted: Supplier

Deleted: Supplier

A day of service (per diem) is defined as 8 man-hours at the site. The total number of days of service shall be defined as the total regular time man-hours at the site divided by eight.

1A.5.3 Design Conference. The Contractor's design engineer shall attend two design conferences at a time and place selected by the Engineer to discuss matters relative to the execution of this Purchase Order. The Contractor's design engineer shall attend additional design conferences as required by the Engineer thereafter to expedite the work.

Deleted: Supplier

Deleted: Supplier

1A.5.4 Instruction Manuals. Instruction manuals shall be furnished in accordance with the requirements stated in Section 1C of these specifications and as scheduled herein.

1A.5.5 Recommended Spare Parts. The Contractor shall provide a complete listing of recommended spare parts with unit prices FOB Intermountain Power Project site, not later than the date listed in the Schedule of Activities. The listing shall include the manufacturer of each part, a description of each part (including industry standard part number if available), the assembly or equipment in which each part will be used, and recommended quantities to be stocked; shall classify the relative criticality of parts based on the manufacturer's experience; and shall list the lead time required for manufacture and delivery of each part.

Deleted: Supplier

Deleted: CIP

JPSC will retain the option of purchasing any one or any combination of spare parts listed at the prices quoted until 6 months after final startup testing and acceptance.

Deleted: The Purchaser

Deleted: the date of commercial operation

Deleted: 100702

IP7014180

1A.6 MILL AND FACTORY WITNESS TESTS. Supplementing the provisions of Sections 2A, 2B, and 2C concerning mill and factory witness tests, the Contractor shall notify the Engineer not less than 10 days prior to the date of each mill or factory witness test.

Deleted: Supplier

Deleted: 15

1A.7 SCHEDULE. The Contractor shall complete the specified activities in accordance with the milestone time periods and dates listed in addition to the timely delivery of the equipment and materials.

Deleted: Supplier

The Schedule of Activities included at the end of this article stipulates the milestone dates and time periods for the work included in this Purchase Order. It is necessary that the Contractor perform the activities shown on or before the dates indicated to avoid delay of the entire project.

Deleted: Supplier

1A.7.1 Activity Periods and Dates. The time periods and dates listed in the Schedule of Activities indicate the latest dates by which the listed activities shall be completed. Data, drawings, and lists for planning, engineering, and documentation may be submitted earlier than the indicated dates at the Contractor's option.

Deleted: Supplier

Equipment and materials shall be delivered within the time frame specified. IPSC will not be obligated to accept delivery or make payment for equipment delivered prior to the earliest acceptable delivery date.

Deleted: The Purchaser

1A.7.2 Engineering Schedule. The Contractor shall submit a schedule for engineering associated with the equipment being provided. Such schedules shall be updated and submitted by the first of each month until completion of the engineering effort.

Deleted: Supplier

1A.7.3 Procurement/Production/Shipping Schedule. The Contractor shall submit a detailed procurement/production/shipping schedule for the equipment and materials not later than the date indicated; thereafter, the schedule shall be updated as directed by the Engineer or Purchaser, but at least every 30 days.

Deleted: Supplier

1A.7.4 Reference Drawings. The following reference drawings are included with this specification:

See attached Drawing List.

The Contractor shall field verify the information shown on the referenced drawings for any information that is used in the design and fabrication of the variable frequency I.D. fan drive equipment. All travel and living expenses expended by the Contractor for field verification shall be included in the lump sum contract price.

Deleted: 100702

IP7014181

1A.7.5 Schedule of Activities.

Activity	Days After Award of Purchase Order
Planning, Engineering & Documentation	
Contractor to participate in design conference	15
Contractor to deliver schedule of engineering to the Engineer	15
Contractor to deliver Quality System Manual to Engineer as specified in Section 1Q	30
Contractor to deliver Inspection and Test Plan to Engineer as specified in Section 1Q	30 days prior to first fabrication
Contractor to deliver Notification of tests/test/inspections to Engineer as specified in Section 1Q	10 days prior to inspection
Contractor to deliver hazardous materials documentation to the Engineer	30 days after award of Purchase Order and with material lists
Contractor to deliver drawings to Engineer	
Outline drawings	30
Schematic and wiring diagrams	45
Input/Output list to plant control system	15

Deleted: Supplier
Deleted: Supplier
Deleted: Supplier
Deleted: ubs
Deleted: 1
Deleted: Supplier
Deleted: ubs
Deleted: 1
Deleted: Supplier
Deleted: ubs
Deleted: 1
Deleted: 14
Deleted: Supplier
Deleted: Supplier
Deleted: DCS
Deleted: 100702

IP7014182

Activity	Days After Award of Purchase Order
Block diagram showing the basic control and protection systems specifying the protection, control, trip and alarm functions at the different locations, the reference signals and commands and the auxiliary supplies (i.e. air, oil, cooling water, electrical auxiliary supplies)	15
Electrical single-line diagram showing main and auxiliary circuitry, including main power input, switchgear, transformer, VFD, system earthing and auxiliary supplies - showing all CTs, PTs, relays, meters, etc., for the control, protection and operation of the drive system with electrical data (i.e. voltage, current, time ratings, impedances, and tolerances)	45
Equipment dimensions, including stub-up locations, shipping splits, and shipping weights	30
Nameplate drawings	15
Torsional analysis	30
Efficiency and power factor values	15
Startup and commissioning instructions and data	6 weeks prior to shipment

Deleted: VFD house structural calcu-¶ lations . 30¶

Deleted: 100702

IP7014183

Activity	Days After Award of Purchase Order
VFD equipment interface information including dead, and seismic loads	30
Anchor bolt information including material, size, and projection	30
Certified report (including test data) for all system level tests	15 days after completion of system level tests
Schedule of system level tests including proposed test procedures	30 days prior to tests
Schedule of certified field startup and acceptance tests	30 days before shipment
Contractor to deliver completed Motor Information Sheets to Engineer	30
Contractor to deliver cost breakdown information to Engineer	15
Contractor to deliver cash flow projection to Engineer	15
Contractor to deliver initial detailed procurement/production/shipping schedule to Engineer	30
Contractor to deliver recommended detailed erection sequence and procedure for Engineer review	45
Contractor to submit "Proof Copy" of Instruction Manual(s) to Engineer	60 days prior to shipment

Deleted: house, circuit breaker, and transformer foundation

Deleted: live, wind,

Deleted: Supplier

Deleted: Supplier

Deleted: Supplier

Deleted: Supplier

Deleted: Supplier

Deleted: Supplier

Deleted: 100702

IP7014184

Activity	Days After Award of Purchase Order
Contractor to distribute 12 copies each for Unit 1 and 2of accepted Instruction Manuals as designated by the Engineer	30 days prior to shipment
Contractor to deliver recommended spare parts list to Engineer	30 days prior to shipment
Contractor to notify Engineer for preshipment inspection	30 days prior to shipment
Contractor to notify Engineer of mill or factory witness test(s)	15 days prior to date of test(s)

Deleted: Supplier

Deleted: Supplier

Deleted: Supplier

Deleted: Supplier

	Earliest Acceptable Delivery Date	Latest Acceptable Delivery Date
Contractor to deliver equipment to jobsite		
Unit 2 (2 fans)	January 2, 2004	January 31, 2004
Unit 1 (2 fans)	January 2, 2005	January 31, 2005
Unit 2 (2 fans)	January 2, 2006	January 31, 2006
Unit 1 (2 fans)	January 2, 2007	January 31, 2007

Deleted: Supplier

Deleted: ASAP . June 15, 2003

24 day plant outage for installation of equipment, final startup testing and acceptance.	Date (exact dates to be determined after contract award)
Unit 2 (2 fans)	March, 2004
Unit 1 (2 fans)	March, 2005
Unit 2 (2 fans)	March, 2006
Unit 1 (2 fans)	March, 2007

Deleted: 100702

IP7014185

Section 1B - GENERAL EQUIPMENT SPECIFICATIONS

1B.1 GENERAL. These General Equipment Specifications apply in general to all equipment and materials and are supplementary to the detailed specifications. If requirements specified herein are in conflict with requirements specified in the detailed specifications, the detailed specifications shall govern to the extent of such conflict.

The Proposal shall be based upon the use of equipment and materials complying fully with the requirements specified in this Section 1B. It is recognized that the Contractor may have standardized on the use of certain components, materials, processes, or procedures different than those specified herein. Alternates in addition to the base proposal on the basis of supplying the Contractor's standard components, materials, processes, or procedures will be considered. The alternate proposal shall clearly stipulate the alternate proposed, the specific exceptions to the specifications, and the price change applicable for supplying such alternate.

Deleted: Supplier

Deleted: Supplier's

1B.2 REFERENCED STANDARDS. Reference to the standards of any technical society, organization, or association, or to the laws, ordinances, or codes of governmental authorities shall mean the latest standard, code, or specification adopted, published, and effective at the date of taking bids unless specifically stated otherwise in these specifications.

The specifications, codes, and standards referenced in these specifications (including addenda, amendments, and errata) shall govern in all cases where references thereto are made except where they conflict with these specifications. In case of conflict between the referenced specifications, codes, or standards and these specifications, the latter shall govern to the extent of such difference.

1B.3 MATERIALS AND EQUIPMENT. Unless specifically provided otherwise in each case, all materials and equipment furnished for permanent installation in the work shall conform to applicable standard specifications and shall be new, unused, and undamaged.

Asbestos containing materials will not be allowed.

Flanges and fittings manufactured in the People's Republic of China will not be allowed.

1B.4 IDENTIFICATION. All correspondence, shipping notices, specifications, engineering data, and other documents pertaining to the equipment and materials furnished under these specifications shall be identified by IPSC's name, the project name, the unit number, the specification number, and the Engineer's project number.

Deleted: the Purchaser's

1B.5 PRESHIPMENT INSPECTION. IPSC and Engineer reserve the right to inspect the equipment prior to shipment.

Deleted: The Purchaser

Deleted: 100702

IP7014186

The Contractor shall notify the Engineer of all shipments not less than 10 days prior to the date of shipment to allow IPSC and Engineer to inspect the equipment if so desired.

Deleted: Supplier

Deleted: the Purchaser

1B.6 MATERIALS LIST. The Contractor shall prepare and submit with the first shipping notice two copies of an itemized materials list covering all material and equipment furnished under these specifications. The materials list shall be in sufficient detail to permit an accurate determination of the completion of shipment.

Deleted: Supplier

1B.7 HAZARDOUS MATERIALS. All shipments of hazardous materials shall be identified on the materials list. A copy of the hazardous materials documentation required by the article entitled MATERIAL SAFETY DATA SHEETS in the Detailed Specifications - Special Conditions shall be included with the materials list and shall also be included with the shipping papers attached to the shipment.

Deleted:

Deleted: HAZARDOUS MATERIALS in the General

1B.8 CORRECTION OF ERRORS. Equipment and materials shall be complete in all respects within the limits herein outlined. All errors or omissions required to be corrected in the field shall be done by the manufacturer or his duly authorized representative at the Contractor's expense.

Deleted: Supplier's

1B.9 NUMBERING SYSTEM. The Engineer will establish an identification numbering system to provide consistent numbering throughout the generating unit. All electrical devices, control and instrumentation equipment, valves, and other items of similar nature shall be permanently identified with the identification number supplied by the Engineer. Except as specified otherwise in these specifications, the identification shall be engraved on stainless steel tags, laminated phenolic tags, nameplates, or an equally permanent method at the option of, and as acceptable to, the Engineer and shall be permanently affixed to the device. The Engineer's identification numbers shall also be included on the manufacturer's drawings.

1B.10 NAMEPLATES. Nameplates shall be furnished for all equipment when specified in the detailed specification sections.

Nameplates shall be laminated white phenolic engraving stock with black core, or 2 ply vinyl white with reverse engraved black fill as manufactured by B. F. Plastics of Lawrence, Ohio, or acceptable equal. The lettering shall not be less than 3/16 inch high. As space permits, nameplates shall have an overall minimum size of 3/4 inch by 3 inches for small equipment nameplates, and 2 inches by 8 inches minimum for major equipment nameplates. The nameplate size shall be subject to acceptance by the Engineer during drawing review.

Nameplates for equipment located in nonair-conditioned areas shall be attached with stainless steel panhead screws, rivets, or drive screws. Nameplates in air-conditioned rooms may be attached with 3M Scotch 468 or acceptable equal adhesive tape. Nameplates shall be not less than 1/16 inch thick when attached with adhesive, and not less than 1/8 inch thick when attached with rivets or screws.

Deleted:

Deleted: 100702

IP7014187

1B.11 FACTORY ASSEMBLY. Equipment shall be shipped completely factory assembled, except when the physical size, arrangement or configuration of the equipment, or shipping and handling limitations make the shipment of completely assembled equipment impracticable, in which case the equipment shall be assembled and shipped as stated in the Contractor's proposal.

Deleted:

Deleted: Supplier's

When proposals are submitted without statements describing sectional shipments, it will be understood that no field assembly of the equipment will be required and the Contractor shall be responsible for all costs encountered in the field for assembly of sections, accessories, or appurtenances not listed in the Proposal as requiring field assembly.

Deleted: Supplier

All separately packaged accessory items and parts shall be shipped with the equipment. Containers for separately packaged items shall be marked so that they are identified with the main equipment. An itemized packing slip, indicating what is in that container only, shall be attached to the outside of each container used for packaging. A similar list shall be inside of each container. A master packing slip, covering all accessory items for a given piece of equipment which are shipped in separate containers, shall be attached to one container.

1B.12 CONSOLIDATED SHIPMENTS. Except where authorized by the Engineer in writing, the Engineer will not accept direct shipments of Contractor-furnished materials and equipment from Subcontractor. The Contractor shall assemble shipping units composed of those items of materials and equipment which he obtains from Subcontractors. Shipping unit assembly shall be at one of the Contractor's regular business addresses. Each item shall be tagged with its individual identification used on the drawings for this Contract Agreement and shipped as part of a shipping unit to the construction site. All shipments from the Contractor's shipping unit assembly location shall be packaged and identified as indicated in this section. The Contractor shall state in his proposal the minimum quantity of materials and equipment he will assemble as a shipping unit, his proposed tagging system for individual items of material and equipment included as part of a shipping unit, and the assembly location for shipping units.

Deleted: Supplier-furnished

Deleted: Sub-suppliers. The Supplier

Deleted: Sub-suppliers.

Deleted: Supplier's

Deleted: Purchase

Deleted: Supplier's

Deleted: Supplier

1B.13 PACKAGING AND IDENTIFICATION OF SPARE PARTS. Spare parts shall be shipped in heavily constructed wooden boxes. The boxes shall be designed as permanent storage enclosures. Separate boxes shall be used for the spare parts for each major piece of equipment. Where applicable, boxes shall be designed and constructed for return shipment of damaged or worn components for repair.

Spare parts shall be protected from damage due to moisture and dirt accumulation during an extended storage period by use of special coatings, airtight membranes, bags of desiccant, or other means acceptable to the Engineer.

Deleted: 100702

IP7014188

Each box shall be marked with the large painted legend as follows:

INTERMOUNTAIN POWER SERVICE CORPORATION
INTERMOUNTAIN POWER PROJECT
SPARE PARTS FOR __(Name of Equipment)__
ERECTION SUPPLIER DO NOT OPEN EXCEPT WITH
IPSC'S PERMISSION

Deleted: ENGINEER'S

A weatherproofed itemized list of the contents shall be attached to the outside of each box. A similar list shall be inside each box.

1B.14 SPECIAL SHIPPING REQUIREMENTS. Where specified, the manufacturer shall mount and ship impact recorders on each railcar transporting the specified equipment. The impact recorders shall be mounted at the factory to provide a permanent record of the magnitude of axial, transverse, and vertical forces to which the equipment will be subjected while in transit. The custody of the impact recorders upon arrival at the plant site shall be the responsibility of the manufacturer's field representative. The recorder impact charts shall be delivered to the Engineer and shall become part of the furnished equipment.

Deleted:

1B.15 WELDING. If the manufacturer has special requirements relating to welding procedures for welds at the terminals of the equipment and if such welding is to be performed under separate specifications, the requirements shall be stated on the manufacturer's drawing of the affected part.

Deleted:

1B.16 SERVICE CONDITIONS. Unless specified otherwise, equipment and material furnished under these specifications shall be suitable for service at an altitude of 4700 feet above sea level, temperatures between -35° F and 45° F.

Deleted: -23° F and 105° F.

Equipment located outdoors shall also be suitable for exposure to solar radiation, fog, rain, snow, ice, coal dust, fly ash, wind, and windblown dust and sand.

Equipment located indoors shall also be suitable for exposure to water spray and dust, including coal dust, in some areas. Equipment located indoors where coal dust may be present shall also be suitable for hose washdown.

1B.17 SHOP COATING. Unless otherwise required by the Technical Requirements, the manufacturer's standard coating systems shall be applied in the shop to ferrous metal surfaces of equipment and materials. The coating systems shall provide resistance to corrosion caused by weather and industrial environments. Surfaces which will be inaccessible after assembly shall be protected for the life of the equipment.

Coating material and application shall conform to the regulations of the air quality management agency having jurisdiction. Materials shall be formulated to contain less than 0.06 percent lead or chromium in the dried film.

Deleted:

Deleted: 100702

IP7014189

Surfaces shall be cleaned, prepared, and coated in accordance with the coating manufacturer's instructions and Steel Structures Painting Council Paint Application Specification No. 1 "Shop, Field, and Maintenance Painting." Surfaces to be painted shall be filled to provide a smooth uniform base for painting.

No coating shall be applied to surfaces within 3 inches of field welded connections.

1B.17.1 Control and Electrical Equipment. Control and electrical equipment, including panels, cabinets, switchgear, transformers, and motors, shall be finish painted. Exterior surfaces shall be the manufacturer's standard color. The interior portions of cabinets shall be gloss white.

Touchup paint shall be provided for repair painting of at least 25 percent of the finish painted equipment surface. The touchup paint shall be the same type and color as the shop applied material. Application instructions shall be provided.

1B.17.2 Mechanical Equipment. Mechanical equipment includes pumps, compressors, valves, valve operators, external piping surfaces, and other similar equipment.

If equipment will operate at temperatures above 200° F and will not be insulated, a high temperature coating system designed for the operating temperatures shall be applied.

1B.17.3 Structural Steel and Miscellaneous Metals. Structural steel and miscellaneous metals include items fabricated of steel such as plates and shapes, ladders, handrail, stair stringers, ducts, hangers, equipment and pipe supports, and similar fabrications.

1B.17.4 Rust-Preventive Compounds. Machined surfaces and other ferrous surfaces which should not be coated, but are subject to corrosion, shall be protected with rust-preventive compounds.

Rust-preventive compounds which are used to protect surfaces of equipment and piping that are exposed to feedwater or steam shall be completely water soluble.

Machined surfaces of weld-end preparations shall be coated with consumable rust-preventive compounds which will not affect the quality of the weld.

1B.17.5 Galvanizing. Structural steel members and steel assemblies specified to be galvanized shall be "pickled" after fabrication processes have been completed. Pickling shall remove scale, rust, grease, and other impurities. Steel shall be hot-dip galvanized in accordance with ASTM A123.

Deleted:

Where either member to be bolted is galvanized, erection and structural bolts shall be galvanized in accordance with ASTM A153.

Deleted: 100702

IP7014190

1B.17.6 Documentation. Shop drawings shall identify the shop applied coating systems. Data to be provided shall include the coating system manufacturer's name and product designation, the degree of surface preparation, dry film thickness, finish color, and Material Safety and Data Sheets (MSDS). Documentation submittal shall conform to the requirements of Section 1C.

Deleted:

1B.18 PROTECTION. All equipment shall be boxed, crated, or otherwise suitably protected during shipment, handling, and storage. Equipment having antifriction or sleeve bearings shall be protected by weathertight enclosures.

Coated surfaces shall be protected against impact, abrasion, discoloration, and other damages. Surfaces which are damaged shall be repaired.

Electrical equipment, controls, and insulations shall be protected against moisture and water damage. All external gasket surfaces and flange faces, couplings, rotating equipment shafts, bearings, and like items shall be thoroughly cleaned, coated with rust-preventive compound, and protected with suitable wood, metal, or other substantial type covering to ensure their full protection. All exposed threaded parts shall be greased and protected with metallic or other substantial type protectors.

All piping, tubing, and conduit connections on equipment and other equipment openings shall be closed with rough usage covers or plugs. Female threaded openings shall be closed with forged steel plugs. The closures shall be taped to seal the interior of the equipment. Open ends of piping, tubing, and conduit shall be sealed and taped.

Returnable containers and special shipping devices shall be returned by the manufacturer's field representative at the Contractor's expense.

Deleted: Supplier's

1B.19 TOOLS. The Contractor shall furnish and ship with each piece of equipment one set of all special tools required for dismantling and maintenance of the equipment. The tools shall be shipped in separate heavily constructed wooden boxes provided with hinged covers and padlock hasps.

Deleted: Supplier

Maintenance tools for each piece of equipment shall be boxed separately and the boxes shall be marked with the large painted legend as follows:

INTERMOUNTAIN POWER SERVICE CORPORATION
INTERMOUNTAIN POWER PROJECT
MAINTENANCE TOOLS FOR ____(Name of Equipment)_____
ERECTION SUPPLIER DO NOT OPEN EXCEPT WITH
IPSC'S PERMISSION

Deleted: ENGINEER'S

Deleted: 100702

IP7014191

A weatherproofed itemized list of the contents shall also be attached to the outside of each box.

The maintenance tools shall include all special handling rigs, bars, slings, and cable. All maintenance tools shall be in new and unused condition and shall become the property of IPSC. The bidder's proposal shall include the list of maintenance tools which shall be furnished with the equipment.

Deleted: the Purchaser.

In addition to the tools for maintenance and dismantling, the Contractor shall furnish the use of all special tools required for erection of the equipment. Erection tools shall remain the property of the Contractor and all shipping costs to and from the jobsite shall be at the Contractor's expense. Erection tools for each piece of equipment shall be boxed separately. Erection tools shall not be boxed with maintenance tools.

Deleted: Supplier

Deleted: property of the Supplier

Deleted: Supplier's

1B.20 ALIGNMENT AND BALANCE. All rotating parts shall be true and dynamically balanced. Excessive noise or vibration, in the opinion of the Engineer or IPSC, will be sufficient cause for rejection of the equipment. All rotating equipment shall be balanced at the factory.

Deleted: Purchaser,

1B.21 NOISE LEVEL. The equivalent "A" weighted sound pressure level for equipment furnished under these specifications (excluding drive motors) shall not exceed 85 dBA free field measured 3 feet horizontally from the base of the equipment and 5 feet above floor level. If the drive motors for the equipment are also furnished under these specifications, the combined sound pressure level of the motor and driven equipment shall not exceed 90 dBA free field. The sound pressure levels stated are decibels to a reference of 20 micropascals.

1B.22 DESIGN COORDINATION. The Contractor shall be responsible for the selection and design of all equipment and materials which will provide the best coordinated performance of the entire system. Components of rotating equipment shall be selected so that the natural frequency of the complete unit is not at or critically near the operating range of the unit. Where actual design characteristics of proposed components vary from those quoted in the Proposal or specified, the Contractor shall take these into account in the establishment of design criteria for related components.

Deleted: Supplier

Deleted: Supplier

1B.23 LUBRICATION. Equipment shall be lubricated by systems designed for continuous operation. Lubrication systems shall not waste lubricants and shall not require attention during startup and shutdown, or routine inspection more frequently than once weekly.

Oil lubricant level indicators shall be furnished and marked to indicate proper levels under both standstill and operating conditions.

1B.24 ENCLOSED GEAR DRIVE UNITS. Enclosed gear drive units furnished as a part of the equipment specified shall be designed for continuous service and shall be in accordance with the latest AGMA standards for the type of gear drive being furnished.

Deleted: 100702

IP7014192

Each gear drive unit shall be capable of withstanding the motor torques developed during start, acceleration, and deceleration if stalled.

1B.25 SAFETY GUARDS. Guards shall be provided for protection of personnel from all exposed moving and/or rotating machine elements.

Each guard shall be fabricated from ASTM A36 steel plate having a minimum thickness of 3/16 inch and designed for easy installation and removal. Necessary supports and accessories shall be furnished with each guard.

Guards for outdoor installation shall be galvanized.

1B.25.1 Horizontal Shaft Equipment. Safety guards for horizontal shafts, shaft couplings, belt sheaves, etc., shall be of the inverted "U" design with sides extending to the equipment base or baseplate.

1B.25.2 Belt Guards. Belt guards shall be fabricated from 1/2 inch, 18 USS gauge, flattened, carbon steel expanded metal. Belt guards shall be complete with supports of 1/8 inch minimum thickness, accessories, and braces. The entire assembly shall be hot-dip galvanized after fabrication.

A permanent metal tag shall be attached to each belt guard. The tag shall indicate the manufacturer's model number, size, and style of replacement belt sets.

Deleted:

Grease fittings shall be extended through the safety guards. Each belt guard shall also be furnished with a hole suitable for insertion of a tachometer.

1B.26 SHAFT COUPLINGS. Shaft couplings shall be used between all drives and driven equipment. Couplings shall be attached to driver and driven shafts by press fits and keys. Couplings shall be of the all metal lubricated gear flexible type, Kop-Flex "Fast" or acceptable equal.

Shaft couplings shall be sized to transmit the maximum brake horsepower requirements of the driven equipment with a service factor of not less than 2.

On applications where the motor is furnished under separate specifications, the motor half coupling shall be machined to the motor shaft dimensions on the motor drawing reviewed by the Engineer, and shipped to the motor supplier for shop mounting. The responsibility for proper fit of the coupling halves shall rest with the Contractor.

Deleted: Supplier.

1B.27 EQUIPMENT BASES. A cast iron or welded steel baseplate shall be provided for all rotating equipment which is to be installed on a concrete base. Each baseplate shall support the unit and its drive assembly and shall have pads for anchoring the units. Baseplates for

Deleted: 100702

IP7014193

equipment subject to water or oil leakage shall be provided with a raised lip all around and shall have a threaded drain connection.

1B.28 PIPING. All piping shall be in accordance with ASME B31.1 - Power Piping. The following minimum requirements shall apply:

All piping other than control and instrument piping	ASTM A106 Grade B steel. 2-1/2 inches and larger shall be Schedule 40 minimum. 2 inches and smaller shall be Schedule 80 minimum.
Fittings	
2-1/2 inches and larger	Butt-weld type.
2 inches and smaller	Forged steel socket-weld type.
Valves	
2-1/2 inches and larger	Carbon steel, Class 150 minimum, butt-weld ends.
2 inches and smaller	Carbon steel, Class 600 minimum, socket-weld ends.

Joints shall be provided as required to facilitate assembly or disassembly of equipment. The joints shall be forged steel unions with hardened and ground stainless steel seats for piping 2 inches and smaller and shall be flanged joints for piping 2-1/2 inches and larger.

1B.29 CONTROL AIR PIPING AND TUBING. Control air piping and tubing shall comply with the requirements of ASME B31.1 - Power Piping.

Control air piping and tubing within control and instrument enclosures/racks shall be arranged to allow any device to be serviced, disconnected, or removed from the enclosure without disconnecting piping or tubing to other devices. Piping and tubing for external connections shall be terminated on a bulkhead plate utilizing bulkhead fittings for enclosures or unions for open racks. Each bulkhead termination shall be identified in a manner acceptable to the Engineer.

Air supply shutoff valves shall be provided for common air supply headers and for each individual air user. All tubing shall be blown clean with dry compressed air after routing but prior to attachment to devices at either end.

Deleted: 100702

IP7014194

The Contractor shall furnish 20 percent spare fittings on the bulkhead plate for external connections.

Deleted: Supplier

Piping and tubing schematic, connection, and interconnection diagrams shall be submitted to the Engineer for acceptance.

1B.29.1 Signal Air. Signal air lines shall be 1/4 inch outside diameter, light drawn temper copper tubing, ASTM B75, joined with compression type brass fittings. Fittings shall be Swagelok, Parker A-Lok, or acceptable equal. Tubing runs greater than 2 feet shall be continuously supported along their entire length using copper or copper plated steel supports or acceptable equal. Tubing runs less than 2 feet shall be supported as required to minimize vibration and tube damage. Tubing bends shall be made without reducing the internal diameter of the tubing.

1B.29.2 Supply Air. All supply air lines shall be drawn temper copper, ASTM B88 Type K, except for tubing runs between the individual air user shutoff valve and the individual user which shall be light drawn temper copper, ASTM B75.

Supply air lines 1/2 inch nominal size and larger shall be drawn temper copper, ASTM B88 Type K, joined by brazing using copper fittings. Copper tubing and fittings shall be made using oxygen free or phosphorus deoxidized copper. Oxygen bearing tough pitch copper tubing and fittings are not acceptable. All changes in direction shall be made with fittings. Valves shall be Whitey Series 60 brass ball valves or acceptable equal, with valve size equal to the line size. Low points shall be provided with drain legs and drain valves. Supply air line supports shall be furnished to minimize vibration and tube damage, and shall be copper or copper plated steel or acceptable equal. Supports for both horizontal and vertical tubing runs shall be furnished at intervals not greater than 5 feet.

Supply air lines 3/8 inch outside diameter and smaller shall be light drawn temper copper, ASTM B75, joined with compression type brass fittings. Transitions from ASTM B88 Type K to/from ASTM B75 light drawn temper copper tubing shall be brazed to NPT. Fittings shall be Swagelok, Parker A-Lok, or acceptable equal. Threaded brass nipples may be used to connect air supply line accessories. Valves shall be Whitey 40 Series brass ball valves or acceptable equal. Where throttling is required, needle valves as manufactured by Whitey, Parker, or acceptable equal shall be furnished. Tubing runs greater than 2 feet shall be supported continuously along their entire length using copper or copper plated steel supports or acceptable equal. Tubing runs less than 2 feet shall be supported as required to minimize vibration and tube damage. Tubing bends shall be made without reducing the internal diameter of the tubing.

1B.30 INSTRUMENT PRIMARY PIPING AND/OR TUBING. Instrument primary piping and tubing is defined as the piping/tubing from the process connection root valve to the blowdown and the instrument valves. Instrument primary piping and tubing shall be in accordance with ASME B31.1 - Power Piping.

Deleted: 100702

IP7014195

1B.30.1 Instrument Primary Tubing. Instrument primary tubing external to instrument enclosures/racks shall be 1/2 inch outside diameter stainless steel ASTM A213 TP316 with a minimum carbon content of 0.04 percent. ASTM A213 EAW (except average wall) is not acceptable. Tubing shall be joined with compression type or socket-weld type stainless steel fittings. Compression type fittings shall be Swagelok, Parker A-Lok, or acceptable equal. Socket-weld fittings shall be Cajon, Parker Weld-lok, or approved equal. Tubing wall thicknesses shall be 0.065 inch for 1,000 psi and below, and shall be 0.083 inch for pressures greater than 1,000 psi. Tubing material hardness shall not exceed Rockwell Rb90. Tubing supports shall be furnished to minimize vibration and tube damage. Tubing runs shall be supported continuously along the entire length both horizontally and vertically. Change in tubing direction shall be done with tube fittings or tube bending. Tubing bends shall be made without reducing the internal diameter of the tubing. All tubing shall be blown clean with dry compressed air after routing but prior to attachment to devices at either end.

Deleted:

1B.30.2 Control and Instrument Enclosure/Rack Tubing. Instrument process tubing within enclosures/racks shall be 1/2 inch outside diameter stainless steel ASTM A213 TP316 with a minimum carbon content of 0.04 percent, ASTM A213 EAW (except average wall) is joined with compression type or socket-weld type stainless steel fittings. Compression type fittings shall be Swagelok, Parker A-Lok, or acceptable equal. Socket-weld fittings shall be Cajon, Parker Weld-lok, or acceptable equal. Tubing wall thickness shall be 0.065 inch. Tubing material hardness shall not exceed Rockwell Rb90. Change in tubing direction shall be done with tube fittings or tube bending. Tubing bends shall be made without reducing the internal diameter of the tubing. All tubing shall be blown clean with dry compressed air after routing but prior to attachment to devices at either end.

Instrument tubing within enclosures/racks shall be arranged to allow any device to be serviced, disconnected, or removed from the enclosure/rack without disconnecting tubing to other devices. Tubing for external connections shall be terminated on a bulkhead plate utilizing bulkhead fittings for enclosures or unions for open racks. Each bulkhead termination shall be identified in a manner acceptable to the Engineer.

Deleted:

The Contractor shall furnish 20 percent spare fittings on the bulkhead plate for external connections.

Deleted: Supplier

Tubing schematic, connection, and interconnection diagrams shall be submitted to the Engineer for acceptance.

1B.30.3 Instrument Flexible Connection. Where flange type (direct mounting) manifolds are not utilized, the final connection from each instrument valve manifold or instrument valve to the instrument shall be 1/4 inch outside diameter tubing (EAW not acceptable). The tubing shall be ASTM A213 TP316 stainless steel with 0.035 inch wall thickness and maximum hardness of Rockwell Rb90. The final tubing connection shall be equipped with

Deleted:

Deleted: 100702

IP7014196

Swagelok, Parker A-Lok, or acceptable equal stainless steel fittings and shall be arranged for easy removal without disturbing the instrument or instrument valve manifold.

1B.31 INSTRUMENT VALVES. All instrument valve manifolds, instrument shutoff valves, instrument equalizing valves, and instrument blowdown valves shall be designed, manufactured, and tested to conform with ASME B31.1 - Power Piping.

Each pressure instrument shall be preceded by an instrument shutoff valve or instrument valve manifold which shall be specifically designed for instrument shutoff service. In addition, each liquid filled instrument primary line shall be provided with a tee ahead of the instrument valve/manifold and blowdown valve(s) which is specifically designed for this service, except as otherwise acceptable to the Engineer. Each differential pressure instrument, when not provided with an instrument valve manifold, shall be provided with an instrument equalizing valve, two instrument shutoff valves, and two test tees with 1/4 inch tube plugs. Each remotely mounted static pressure instrument, when not provided with an instrument valve manifold, shall be provided with an instrument shutoff valve and test tee with 1/4 inch tube plugs.

Deleted:

1B.31.1 Instrument Valve Manifolds. Two-valve manifolds shall be provided for all remotely mounted static pressure instruments. Three-valve manifolds shall be provided for differential pressure instruments. Valve manifolds shall be as manufactured by Anderson-Greenwood, Swagelok, Hex, Dragon, or acceptable equal.

Instrument valve manifolds shall include the following features:

Stainless steel construction.

Grafoil packed stems.

Test elbows with 1/4 inch tube plugs (instrument side).

Compression type tube fittings shall be dual ferrule.

Where flange type (direct mounting) manifolds are used, they shall be acceptable to the Engineer.

1B.31.2 Instrument Shutoff, Instrument Equalizing, and Instrument Blowdown Valves. Instrument shutoff, instrument equalizing, and instrument blowdown valves shall be Whitey stainless steel Series 12N with grafoil packing, Anderson-Greenwood stainless steel Series H7HP, or acceptable equal. Blowdown valves shall be provided at the instrument for each instrument primary line except oil, draft, and vacuum services. Blowdown valves shall have the following features: globe pattern design, stainless steel construction, grafoil packed

Deleted: 100702

IP7014197

stems, and shall have a minimum of 0.25 inch orifice. For systems having operating pressures above 600 psi, two blowdown valves in series shall be provided on each instrument primary line.

Deleted:

1B.32 COMPRESSED AIR. Filtered, dried, oil free compressed air will be supplied for operation of pneumatic instruments and control valves. Normal house service air will be supplied for operation of other pneumatic devices. The compressed air will be supplied at receiver pressure varying from 50 to 150 psi.

Pressure regulators shall be provided for pneumatic devices which operate at pressure levels other than receiver pressure. Pressure regulators shall be Fisher Controls Co. Model 67AFR with pressure gauge. Where pneumatic drives operate at full receiver air supply pressure, air filters shall be furnished. Air filters shall be Fisher Controls Co. Model 67AFD with pressure gauge.

1B.33 INSTRUMENTATION. Unless specified otherwise in other sections, all instrumentation components furnished with the equipment shall be in accordance with the following articles and shall be constructed to withstand the temperatures, pressures, and corrosive conditions encountered in the actual service. Instruments rated for hazardous area classifications shall be furnished where required by applicable code or the detailed specifications.

Deleted:

Deleted:

Scale ranges shall be suitable for the equipment and shall be submitted to the Engineer for acceptance.

All instruments requiring electrical wiring shall be provided with a 3/4 inch conduit hub if available.

1B.33.1 Limit Switches. Limit switches, except those integrally mounted on motor-operated valves, shall be selected from the following alternates:

> Namco Controls "Snaplock" Series EA-700-20000. Switches shall have not less than two normally open and two normally closed contacts.
>
> Namco Controls "Snaplock" Series EA-170-14100. Switches shall have not less than two normally open and two normally closed contacts.

1B.33.2 Pressure Switches. Pressure switches shall have a minimum of one SPDT switching element and shall be selected as follows:

> General static and differential pressure switches for normal static pressure applications shall be SOR, Inc.

Deleted: 100702

IP7014198

Low differential pressure switches for low static pressure applications (below 500 psig) requiring combined indication and switch contacts shall be Dwyer Instruments, Inc.

The acceptability of each pressure switch with respect to range, overpressure capability, repeatability, and deadband shall be demonstrated to the Engineer. Substitution of switches by other manufacturers must be acceptable to the Engineer.

1B.33.3 Temperature Switches. Temperature switches shall be Allen-Bradley Bulletin 837 or acceptable equal with NEMA 4 enclosures. Standard length stainless steel armored capillary tubes shall be furnished where required. Thermowells shall be furnished to allow removal of the capillary tube while the equipment is in service and shall be as specified in this Section 1B under the article entitled Thermowells. The acceptability of each temperature switch with respect to range, repeatability, and deadband shall be demonstrated to the Engineer.

Deleted:

1B.33.4 Float Type Level Switches. Level switches shall be as manufactured by Magnetrol International or acceptable equal having float and body construction appropriate to the service conditions of the systems to which they are connected. Switch elements shall be of the vibration resistant snap acting type magnetically coupled to the float. Two switch elements shall be available at each level point monitored. Each switch element shall be double-throw construction. Switch element leads shall be of high temperature construction and terminated on terminal blocks within the switch housing. Switch housings shall be NEMA Type 4, unless otherwise specified.

Deleted:

1B.33.5 Radio Frequency Probe Type Level Devices. Radio frequency (RF) probe type level instrument systems shall be manufactured by Drexelbrook Engineering, Magnetrol, or acceptable equal. Level instruments furnished shall be appropriately constructed to withstand the service conditions of the systems to which they are connected. Level instrument systems furnished shall be designed to ignore material buildup (coating) on the sensing element and thus only respond to actual changes in vessel material level. Where required by the manufacturer's design, level instrument systems shall be furnished complete with suitable radio frequency interference filters to eliminate the possible effect of transceivers being operated within the plant.

Deleted:

Electronic level monitoring systems shall impress low power, radio frequency voltages between sensing elements and ground. Both the capacitive and resistive components of the current flow caused by material level shall be measured and converted to produce suitable outputs for use by others. Continuous level systems shall output a 4 to 20 mA dc current signal which is isolated from ground and varies proportionally with material level. Point type system outputs shall be double-pole, double-throw (dpdt) output contacts. Level instrument systems shall be furnished to either be powered by a 115 volts ac, 60 hertz supply or powered by the dc supply used to power a typical 4 to 20 mA dc instrument signal current loop.

Deleted:

Deleted: 100702

IP7014199

In applications requiring that the electronics unit be mounted remote from the probe, the Contractor shall furnish 50 feet of any special cable recommended by the manufacturer to connect sensing probes to separately mounted electronics enclosures. Special cable shall be defined as anything other than stranded 16 AWG, twisted, shielded cable or stranded 14 AWG unshielded cable. Cable furnished shall be of adequate mechanical strength to be pulled through conduit provided by others. If special cable is required, it shall be furnished with any required connectors installed on one end only, along with any required cable termination kits and fittings.

Deleted: Supplier

1B.33.6 Solenoid Valves. Solenoid valves shall be as manufactured by Automatic Switch Company. Valves shall be selected to incorporate body construction, trim materials, and internal arrangements suitable to the application and shall be acceptable to the Engineer. Solenoid enclosures shall be NEMA 4 unless otherwise specified. Junction box solenoids with screw terminal coils shall be provided when available. Solenoid coils shall be Class H high temperature construction and shall be suitable for continuous duty.

Manual operators shall be provided for solenoid valves used as pneumatic operator pilot valves.

The manufacturer's standard solenoid valves may be furnished for the following applications: dust collector pulse air, hydraulic fluids, and gauged solenoids within an enclosure.

Deleted:

1B.33.7 Pressure Gauges. Gauges for control air supply and signal pressure integral to the instrument shall be in accordance with the manufacturer's standards. All other gauges shall have a scale range selected such that the normal operating pressure is approximately mid scale (between one-third and two-thirds of full scale). Gauges shall have the service legend engraved on the dial or have a tag, engraved with the Engineer's ID number and the service legend, attached to the gauge. Static gauges shall have a 4-1/2 inch dial. Gauges shall have laminated safety glass. Gauges shall have stainless steel wetted parts, movements, and sockets unless the specific application requires other materials. All static gauges shall have 1/2 inch NPT bottom connections.

Static gauges shall be supplied with the following options to protect the gauge sensing element as stated:

> Pulsation dampener (Teledyne Republic Type 6011 or acceptable equal) to protect against process fluid oscillations of ±3 percent or more of the scale range.
>
> Isolation diaphragm to protect against corrosive or thick plugging type process fluids.

Deleted: 100702

IP7014200

Overpressure and underpressure stops to protect against pressure surges outside the scale range limits.

Liquid fill to protect against excessive equipment or pipeline vibrations.

Static gauges shall be Perma-Cal Model 111TIB or Ashcroft "Duragauge" 1279.

Differential gauges for applications with static pressures up to 500 psig and ranges between 0 to 0.5 in. wc and 0 to 300 psid shall be Dwyer Instruments, Inc. Gauge bodies for water process fluids shall be brass.

Differential pressure gauges for applications with static pressures greater than 500 psig or where the above gauges are not suitable for the required differential pressure ranges, shall be ITT Barton 200 Series indicators with a Model 199 differential pressure cell. Gauges shall have 6 inch dials, 316 stainless steel bodies with a 1,000 or 3,000 psig safe working pressure, and ruptureproof stainless steel bellows.

1B.33.8 Thermometers. Thermometers for local mounting shall be minimum 4-1/2 inch dial, adjustable angle, bimetal or gas actuated thermometers manufactured by Ashcroft with 1/2 inch compression unions. Thermometers for panel mounting shall be minimum 4-1/2 inch dial, gas actuated thermometers manufactured by Ashcroft, Marsh, US Gauge, or Wechsler.

Gas actuated thermometers shall be furnished with stainless steel armored capillary tubing of the length required for the installation. Separate nameplates of engraved laminated phenolic shall be furnished and wired to the instrument to identify the service and tag number. Legends shall be as directed by the Engineer. Thermowells with lagging extensions where required shall be furnished for all thermometers and shall be as specified in this Section 1B under the article entitled Thermowells except that extension nipples shall not be furnished for thermometers.

Deleted:

1B.33.9 Temperature Detectors. Temperature detectors shall be thermocouples or resistance temperature detectors as required by the following paragraphs and the detailed specifications.

Temperature detectors equipped with thermowells shall be spring-loaded and shall be furnished as complete assemblies, each including a well, nipple, and weatherproof connection head. Thermowells shall be as specified in this Section 1B under the article entitled Thermowells.

Thermocouples shall be single element, stainless steel sheathed, with grounded measuring junctions. Thermocouples and extension wire shall meet the standard limits of error specified in ANSI MC96.1.

Deleted: 100702

IP7014201

Temperature detectors for bearing temperatures shall be ISA Type E (chromel-constantan) thermocouples with Type EX extension wire.

Temperature detectors for metal temperatures other than bearings shall be ISA Type E (chromel-constantan) thermocouples with Type EX extension wire.

Thermocouples for fluid system temperature measurements shall be ISA Type E (chromel-constantan) with Type EX extension wire.

Resistance temperature detectors for fluid system temperature measurements shall be 100 ohm at 0° C platinum, metal sheathed, ceramic packed, ungrounded resistance temperature detectors.

Temperature detectors for motor winding temperatures shall be as specified in Section 1D.

Temperature detectors for transformer winding temperatures shall be as specified in the detailed specification sections.

1B.33.10 Thermowells. Fluid system temperature sensors shall be equipped with thermowells. Thermowells shall be one-piece solid bored Type 316 stainless steel of stepless tapered design. Maximum bored internal diameter shall be 0.387 inch.

Deleted:

The design of thermowells shall be certified acceptable for the maximum conditions of temperature, pressure, and fluid velocity by methods described in ASME Performance Test Code 19.3, Chapter 1, Paragraphs 8 through 19. The acceptability of each well shall be demonstrated to the Engineer. Thermowells shall be threaded and constructed to allow seal welding after installation.

Thread sizes shall be as follows:

Gas and air duct protection tubes	2 inch NPT
All others	3/4 inch NPT

Thermowell and protection tube insertion length shall be as determined by the manufacturer, unless otherwise specified in the Technical Requirements. Thermowell outside diameter at the beginning of the taper shall be approximately the same as the root diameter of the threads. Each thermowell shall be furnished with a stainless steel extension nipple of the length required to keep the thermocouple head at least 2 inches away from the insulation and lagging.

1B.33.11 Test Wells. Test wells shall meet all the criteria for material, design, construction, and certification specified for thermowells. Each test well shall be furnished with a stainless steel extension nipple and stainless steel screwed cap. Extension nipple length shall be as determined by the manufacturer, unless otherwise specified in the Technical Requirements.

Deleted: 100702

IP7014202

1B.33.12 Protecting Tubes. Duct temperature sensors shall be equipped with protecting tubes. Protecting tubes shall be 1 inch standard weight pipe, 316 stainless steel unless specified otherwise in the technical specifications. Type 316 stainless steel protecting tube bushings shall be provided to make a 2 inch NPT connection to the duct wall allowing a variable insertion length into the duct by sliding the protecting tube through the bushing and then seal welding the protecting tube to the bushing. Protecting tube insertion lengths shall be as determined by the manufacturer and acceptable to the Engineer.

1B.33.13 Recorders. Recorders shall be chart type recording devices for the production of multicolored trace records which are legible and permanent. Thermal paper printers are not considered to be acceptable recording devices. Recorders furnished shall accept 120 VAC power supplies and shall be reliable, microprocessor based, programmable units of modular construction. If batteries are required to support programming memories, they shall be lithium type with a minimum 4 year life. Recorder chart writing systems shall employ long-life, disposable marking systems which are easily replaced. Recorders furnished shall, as a minimum, be capable of printing the chart scale and of producing red, green, and blue traces at a chart speed of 1 inch per hour. Recorders furnished shall also be capable of printing the date and time on the chart and of indicating signal input values in engineering units on a display visible from the recorder front. Strip chart recorders shall be furnished complete with a 1 year supply of "Z-fold" or "fan fold" type chart paper to simplify chart paper installation and to enhance record storage and review. Continuous writing pen type recorders shall be Johnson-Yokogawa Corp. of America Micro R 100 Series or acceptable equal.

Continuous writing pen type recorders are preferred. Multipoint type recorders which scan a number of inputs and produce a dot/trace type record shall ONLY be furnished in measurement applications which have received prior acceptance by the Engineer. An example of an acceptable multipoint recorder application would be the monitoring of numerous permanent or temporary boiler tube temperature thermocouples. If multipoint recorders are furnished, they shall be as manufactured by Johnson-Yokogawa Corp. of America or acceptable equal and be furnished in accordance with all applicable requirements specified for recorders in the preceding paragraph.

Deleted:

1B.33.14 Transmitters. Transmitters for the measurement of differential pressure, static pressure, or flow where applicable shall be microprocessor based Honeywell ST100 series SMART transmitters.

All wetted parts shall be stainless steel.

1B.33.15 Indicators. All indicators shall be Weschler Instruments Bargraph Meter Type BG252 with digital display or acceptable equal.

Deleted: 100702

IP7014203

1B.33.16 Positioners. Positioners shall be electric-to-pneumatic Fisher Controls Type DUC5010, or acceptable equal. Positioners shall be designed for a control signal input range of 4-20 mA dc.

All positioners shall provide an output signal from 0 psig to the full supply air pressure required by the diaphragm. Electric-to-pneumatic positioners shall not be provided with bypasses; however, pneumatic-to-pneumatic positioners shall be provided with bypasses.

All positioners shall be equipped with filter regulator air supply sets mounted on the valve yokes. All positioners shall be capable of split range sequencing and direct or reverse action. Positioner action shall be field changeable without additional parts. Positioners shall be of the force balance type employing positive cam type feedback to provide accurate character feed final control positioning.

Where electric-to-pneumatic positioners are not available, a Rosemount Type 3311 electric-to-pneumatic transducer shall be provided with a pneumatic-to-pneumatic positioner.

1B.33.17 Position Transmitters. Position transmitters shall be Jordan Controls, Inc., or acceptable equal. Position transmitters shall produce an electrical dc signal in direct relationship to the actuator position. The output signal range shall be 4-20 mA dc, ±1.0 percent linear. The transmitter shall be 2 wire, isolated, and loop powered with a NEMA 4 enclosure.

1B.33.18 Purge Rotameters. Rotameters shall be Fischer & Porter Model 10A6131NA2B1A, Ametek Model 20-7050-3200, Moore Products Company Model 62VA, or acceptable equal.

1B.33.19 In-Line Flow Switches. Flow switches shall be Universal Flow Monitors, Inc., indicating flow switch with one 4 wire spdt switch. Housing material and internal moving parts shall be brass, bronze, or stainless steel as acceptable to the Engineer. Switch housing shall be NEMA 4 with wired-on phenolic ID tag.

1B.34 CONTROL POWER. Electrical power for control and instrumentation will be a nominal 120 volt, single-phase, 60 hertz, alternating current, or a nominal 125 volt direct current. The Contractor shall provide any devices required for proper operation and protection of the equipment during electrical power supply and ambient temperature fluctuations described in the following paragraphs.

Deleted: Supplier

All dc electrical control devices shall be designed for continuous operation on an ungrounded station battery at any voltage from 100 to 140 volts dc. Electrical devices served from this supply shall not impose any ground connections on it.

All ac electrical control devices shall, unless otherwise specified, be designed for continuous operation at any voltage from 102 to 132 volts alternating current. The dropout voltage shall

Deleted: 100702

IP7014204

be less than 75 volts for relays and 90 volts for contactors and starters. Alternating current electrical control devices operating at nominal voltages other than 120 volts shall be designed for continuous operation over proportional voltage variations.

All devices shall be guaranteed to operate satisfactorily under voltage conditions specified in the above paragraphs and at a range of ambient temperatures from 50° C to -30° C outdoors and from 50° C to -10° C indoors.

1B.35 AUXILIARY POWER. Auxiliary equipment, such as motors, transformers, and rectifiers, requiring electrical power shall be designed to operate from one of the nominal electrical power sources as follows:

Volts	Phase	Hertz
6900	3	60
480	3	60
240	3	60
120	1	60
125	dc	-- (Emergency)

Deleted: 4160

Alternating current motor voltage ratings with relation to horsepower shall be in accordance with the following:

Horsepower	Volts	Phase
Below 1/2	115	1
1/2 thru 249	460	3
250 and above	6600	3

Deleted: 4000

Emergency motors shall be designed to operate from a nominal 125 volt dc supply. Direct current motors shall be capable of continuous operation at any terminal voltage from 100 to 140 volts dc for motors operating from a 125 volt dc supply.

Variations from motor design voltages specified must be acceptable to the Engineer.

1B.36 RACEWAY. Unless specified otherwise, all raceway interconnections between devices, panels, boxes, and fittings shall conform to ANSI C80.1 and UL 6. All conduit connections shall be of the threaded type, and all conduit, couplings, and fittings shall be hot-dip galvanized steel. The interior and exterior surfaces of all rigid conduit, couplings, and fittings shall have a continuous zinc coating with an overcoat of transparent enamel, lacquer or zinc chromate. Unless specified otherwise, all conduit shall be rigid steel or liquidtight flexible steel not exceeding 3 feet in length. All conduit entering outdoor enclosures shall enter through OZ-Gudney Type CHM raintight malleable iron hubs or threaded openings.

Deleted: 100702

IP7014205

Unless otherwise specified, all liquidtight flexible conduit shall be plastic jacketed, galvanized steel, Anaconda Sealtight Type UA for general service and Type HC for high temperature service. Flexible conduit that could be exposed to damaging liquids or vapors shall have a jacket material suitable for the service. Flexible conduits shall not exceed 3 feet in length.

Deleted:

Deleted:

One exterior locknut and one interior locknut and one bushing shall be provided at the termination of each conduit not terminated in a hub. Locknuts shall be designed to securely bond the conduit to the box or cabinet when tightened. Locknuts shall be so constructed that they will not be loosened by vibration.

Insulated bushings with insulating inserts in metal housings shall be provided on all conduit not terminated in hubs and couplings. Grounding type bushings shall be provided on all conduit containing power circuits and on all conduit on equipment to be located in hazardous areas. Hazardous areas shall be as defined by the National Electrical Safety Code and the National Electrical Code. Standard bushings shall be galvanized.

Unless otherwise specified, all conduit fittings shall conform to the requirements of UL 514. All liquidtight flexible conduit fittings shall be galvanized steel, Appleton STN, STB, or acceptable equal and shall bear the UL label.

Conduit fittings used on outdoor equipment shall be of heavy cast construction and shall be sealed and gasketed.

All conduit shall be installed in exposed runs parallel or perpendicular to dominant surfaces with right angle turns made of symmetrical bends or fittings. A run of conduit shall not contain more than the equivalent of four 90 degree bends, including those immediately at outlets and fittings. Bends in conduit shall be made without reducing the internal diameter of the conduit.

Deleted:

All conduit runs shall be rigidly supported at intervals not exceeding 10 feet. Each conduit shall be supported within 1 foot of junction boxes and fittings.

Conduit shall be supported by means of conduit clamps and clamp-backs.

Moisture pockets shall be eliminated from conduits. If water cannot drain to the natural opening in the conduit system, a hole shall be drilled in the bottom of a pull box or conduit fitting provided in the low point of the conduit run.

Conduit shall be securely fastened to all boxes and cabinets. Threads on metallic conduit shall project through the wall of the box to allow the bushing to butt against the end of the conduit. The locknuts both inside and outside shall then be tightened sufficiently to bond the conduit securely to the box.

Deleted: 100702

IP7014206

The raceway system provided for all interconnecting wiring shall be acceptable to the Engineer. Raceway systems utilizing gland seals will not be acceptable.

1B.37 ELECTRICAL ENCLOSURES. Unless indicated otherwise in these specifications, electrical enclosures, except junction boxes and pull boxes 4 inch trade size and smaller, shall be as follows:

Location	Enclosure Type
Indoor (Nonhazardous)	
Dry areas	NEMA 12.
Wet areas	NEMA 4.
Outdoor (Nonhazardous)	NEMA 4X (NEMA 3R, if 4X is not available).
Hazardous	NEMA 7.

The construction of electrical enclosures located in areas subject to conditions classified in the National Electrical Safety Code and the National Electrical Code as hazardous shall be of a type designated by NEMA as suitable for the environment in which they are located in addition to NEMA 4 or NEMA 12 as required.

Enclosures for areas classified as hazardous due to possible presence of ammonia, shall be Type NEMA 7.

Electrical enclosures, except those of cast metal, shall be constructed from steel plate reinforced as required to provide true surface and adequate support for devices mounted thereon. Thickness of the steel plate shall conform to the requirements of UL. Enclosures shall be of adequate strength to support mounted components during shipment and to support a concentrated load of 200 pounds on their top after erection.

Deleted:

Free-standing enclosures shall be 90 inches high, not more than 20 feet wide, and not more than 36 inches deep.

All junction boxes or pull boxes 4 inch trade size or smaller in any dimension shall be galvanized malleable iron or acceptable equal cast ferrous metal.

Deleted:

Junction boxes and pull boxes shall be in accordance with the requirements of NEC, Article 370, and shall be without knockouts.

Deleted: 100702

IP7014207

Except as indicated otherwise in these specifications or on the drawings, all junction boxes and pull boxes larger than 4 inch trade size in all dimensions for use in indoor locations shall be sheet steel hot-dip galvanized after fabrication and those for use in outdoor or damp locations shall be galvanized cast ferrous metal, sheet steel hot-dip galvanized after fabrication, or sheet steel epoxy coated inside and outside after fabrication. The epoxy coating shall consist of a 3 mil coat of zinc rich epoxy primer with a minimum of 80 percent zinc in the dry film, followed by two finish coats of epoxy. Each finish coat shall be a minimum of 4 mils thick high gloss, two component polyamide.

Deleted:

1B.37.1 Electrical Enclosure Heating. Where electrical enclosure heating is specified, at least two space heaters, one adjustable thermostat, and one fuse and fuse block shall be provided completely wired in the enclosure. The space heaters, thermostat, and fuse block shall not interfere with normal cable entrance into the enclosure or with maintenance or replacement of devices within the enclosure. Normal use of space heaters shall not change or discolor any painted surface.

Space heater capacity shall be as required to maintain the enclosure internal temperature above the dew point under the specified service conditions.

Space heater voltage rating shall be 240 volts. Voltage applied to space heaters shall be 120 volts.

Space heaters shall be controlled by an adjustable thermostat, factory set to close on falling temperature at 80° F (on) and open on rising temperature at 95° F (off). The thermostat shall incorporate an indicating thermometer and set point temperature indication.

Any thermally controlled devices within the enclosure shall be temperature compensated for correct operation at 85° F and above.

Space heater leads shall be stranded copper cable with 600 volt insulation and shall include terminal connectors. Space heater sheaths shall be of a corrosion-resistant, nonoxidizing material and shall have a thickness not less than 0.025 inch.

1B.38 CLASSIFICATION IDENTIFICATION OF ELECTRICAL EQUIPMENT IN HAZARDOUS AREAS. All electrical equipment and devices located in areas subject to conditions classified in the National Electrical Safety Code and the National Electrical Code as hazardous shall be furnished with a nameplate stating the equipment classification. The nameplate data shall include the class, group, division, and operating temperature designations as applicable, and the NEMA type. Classification identification nameplates and attachment pins shall be corrosion-resistant metal.

Deleted:

1B.39 WIRING. In general, all devices furnished under these specifications and requiring electrical connections shall be designed for wiring into electrical enclosures with terminal blocks. Terminal blocks shall be furnished for conductors requiring connection to circuits

Deleted: 100702

IP7014208

external to the specified equipment, for internal circuits crossing shipping splits, and where equipment parts replacement and maintenance will be facilitated.

Splices will not be permitted.

One spare normally open and one spare normally closed contact on each control switch and lockout relay shall be wired out to terminal blocks.

All wiring leaving an enclosure shall leave from terminal blocks and not from other devices in the enclosure.

Auxiliary equipment such as terminal blocks, auxiliary relays, or contactors shall be readily accessible. Auxiliary equipment shall be located in compartments, enclosures, or junction boxes in such arrangement that a serviceman will have direct access to the equipment without removal of barriers, cover plates, or wiring.

Terminal blocks for external connections shall be grouped in the instrument and control compartment for easy accessibility, unrestricted by interference from structural members and instruments. Sufficient space shall be provided on each side of each terminal block to allow an orderly arrangement of all leads to be terminated on the block.

Terminal blocks shall not be mounted in compartments containing cables or buses operating at voltages above 600 volts.

A shorting type terminal block shall be installed at an accessible location for each set of current transformers supplied with the equipment furnished under these specifications. The shorting terminal block shall be the one nearest the current transformers. No other shorting type terminal blocks are required unless specified otherwise. The shorting terminal blocks shall be furnished with white marking strips.

All electrical cables shall be conservatively selected for the electrical and environmental conditions of the installations and shall be of the best construction for the service where unusual service conditions are encountered. Proper temperature application cable shall be used throughout. Except where required to be otherwise to perform satisfactorily in the service, or unless otherwise specified in the detailed specifications, all electrical power and control conductors shall be Class B, stranded copper conductors, 14 AWG or larger.

Deleted:

Materials containing asbestos shall not be utilized in any of the electrical cable constructions. In addition, electrical cables which utilize mineral insulation (NEC Type MI) or polyvinyl chloride (PVC) insulation (NEC Types AWM, MTW, TA, TBS, THHN, THHW, THWN, TW, or THW) shall not be utilized. PVC shall not be utilized as a jacketing material on any of the cable constructions.

Deleted: 100702

IP7014209

Control panel and cabinet wiring shall utilize stranded copper conductors with flame retardant cross-linked polyethylene or flame retardant ethylene-propylene rubber insulation rated 600 volts and shall meet the requirements of UL 44 for Types SIS and XHHW. The cables shall also meet the UL 44 VW-1 flame test and shall be Rockbestos Type SIS, VW-1; American Insulated Wire Type SIS, VW-1; Continental Wire & Cable Type SIS, VW-1; or acceptable equal.

General service power and control cables, integral to the equipment furnished but not internal wiring of control cabinets or panels, shall be rated for the maximum service voltage but not less than 600 volts. Single conductor cables shall have ethylene-propylene rubber insulation with a hypalon jacket, and multi-conductor cables shall have flame retardant cross-linked polyethylene conductor insulation and an overall hypalon jacket or acceptable equal insulation system, except NEC Type SF-2 silicone rubber insulated cable with braided glass jacket or NEC Type FEP fluorinated ethylene-propylene insulated cable shall be used where ambient conditions cause conductor operating temperatures to exceed the temperature ratings of the general service cable insulation specified.

Deleted:

Deleted:

All thermocouple cable shall utilize solid conductors with twisted and shielded pairs. Insulation shall be color-coded in accordance with the requirements of ANSI MC96.1. These requirements also apply to thermocouple extension wire which is furnished internal to Contractor-furnished equipment. The shield wire for each thermocouple furnished for external connections shall be insulated with a spaghetti sleeve and terminated on an ungrounded terminal. Thermocouple extension cables shall utilize conductors which are 20 AWG or larger.

Deleted:

Deleted: Supplier-furnished

Deleted:

All instrument cable shall utilize stranded copper conductors with twisted and shielded pairs or triads. These requirements also apply to instrument cable which is furnished internal to Contractor-furnished equipment. Shielding of these cables shall consist of aluminum-polyester tape and copper drain wire. Conductor insulation and overall jacketing material on these cables shall be teflon. The shield drain wire for each instrument cable shall be insulated with a spaghetti sleeve and terminated on an ungrounded terminal. Instrument cables shall utilize conductors which are 18 AWG or larger.

Deleted: Supplier-furnished

Thermocouple extension and instrument cables shall be Belden Wire and Cable plenum type or acceptable equal.

Control conductor terminal connectors shall be compression type connectors properly sized for the conductor and the terminal. The connectors shall be constructed of copper and shall be tin plated. The interior surface of the connector wire barrel shall be serrated, and the exterior surface of the connector wire barrel shall be furnished with crimp guides.

Noninsulated terminal connectors shall be used for conductors terminated on devices equipped with individual fitted covers, such as General Electric Type SB-1 control switches and General Electric Type HEA lockout relays. Preinsulated ring type terminal connectors

Deleted: 100702

IP7014210

shall be used on all current and potential transformer circuits. All other terminal connectors for conductors smaller than 8 AWG shall be preinsulated ring type or preinsulated spade type.

Preinsulated terminal connectors shall include a vinyl sleeve, color coded to indicate conductor size. Preinsulated terminal connectors shall include a metallic support sleeve bonded to the vinyl insulating sleeve and designed to grip the conductor insulation.

Ring type connectors shall be manufactured by AMP, 3M, or acceptable equal. Spade type connectors shall be AMP slotted spring spade or 3M Scotchlok Series 61 snap spade terminal connectors.

Connectors for thermocouple extension wire shall be Omega Engineering Inc., Type SL, or acceptable equal.

Each terminal block, terminal, conductor, relay, breaker, fuse block, and other auxiliary device shall be permanently labeled to coincide with the identification indicated on the drawings. All terminals provided for termination of external circuits shall be identified by inscribing circuit designations acceptable to the Engineer on the terminal block marking strips with permanent black ink. All other wiring terminations shall be identified by printing on conductor identification sleeves. A conductor identification sleeve shall be provided on each end of each internal conductor. Each sleeve shall be marked with the opposite end destination identification described in Section 1C under WIRING DIAGRAMS. Conductor identification sleeves shall be polyvinyl chloride (PVC), not less than 1/2 inch long, and shall be as manufactured by W. H. Brady Company, Milwaukee, Wisconsin, or acceptable equal. Conductor identification shall be printed on the sleeve with permanent black ink acceptable to the Engineer. After inscription of the conductor identification, the sleeve shall be coated as required to prevent smudging. Conductor identification shall be permanent, unaffected by age, heat, solvents, or steam, and not easily dislodged. Adhesive labels are not acceptable.

The arrangement of connections on terminal blocks shall be acceptable to the Engineer.

All connections requiring disconnect plug and receptacle type devices shall be provided with factory terminated conductors on each plug and receptacle. Plugs and receptacles shall be factory wired into junction boxes containing terminal blocks for external connections. All conductors on the disconnect portion of plug-receptacle assemblies shall be in a common jacket.

All temporary wiring installed in the factory for equipment testing shall be removed prior to shipment of the equipment.

1B.40 EQUIPMENT SAFETY GROUNDING. All electrical equipment that is part of an integral shipping unit or assembly shall be furnished with bare copper grounding conductor

Deleted: 100702

IP7014211

extending to a central ground connection lug. The lug shall be suitable for field connection to the station ground grid by others.

Isolated logic system or single-point ground connections required for proper operation of electronic equipment shall be insulated from the equipment safety ground. Such connections shall be extended, using insulated cable, to a single termination point suitable for field connection to the appropriate ground system by others.

Deleted:

Electrical equipment shall include all enclosures containing electrical connections or bare conductors with the exception of control devices, such as solenoids, pressure switches, and limit switches, unless such devices require grounding for proper operation.

Where a ground conductor is included with the power conductors of motor circuits, a compression type ground conductor termination shall be used and connected to the motor frame inside the motor terminal housing.

The conduit system shall not be considered to be a ground conductor except for itself. All conduits containing power circuits shall be provided with grounding type bushings and shall be wired together inside enclosures and connected internally to the enclosure grounding lug or grounding bus with bare copper conductor. Grounding bushings 1-1/2 inches and smaller shall be grounded with 8 AWG bare copper ground conductor. The ground conductors to larger bushings shall be sized in accordance with the NEC but shall not be smaller than 8 AWG.

Unless otherwise specified, ground conductors shall be uninsulated strand Class B standard round soft drawn uncoated copper as defined in ICEA S-19-81, and all clamps, conductors, bolts, washers, nuts, and other hardware used with the grounding system shall be copper.

1B.41 PIN AND SOCKET CONNECTORS. Pin and socket connectors shall have threaded couplings and crimp type contacts and shall meet Military Specification MIL-C-5015 except for pin and socket plating. Pin and socket plating shall be a minimum of 0.000050 inch of gold over 0.000050 inch of nickel. Connectors shall be manufactured by Amphenol, ITT Cannon, Pyle-National, or acceptable equal. If the Contractor is unable to furnish connectors as specified, he shall submit a sample of the connector he proposes to furnish accompanied by complete manufacturer's specification data with the request for Engineer acceptance.

Deleted: Supplier

1B.42 TERMINATION OF 600 VOLT POWER CABLE. The capacities of conduit entrances, terminal enclosures, and conductor terminals for 600 volt power cable terminations in equipment furnished under these specifications shall be as required to accommodate copper or aluminum phase conductors and copper ground conductors which are sized in accordance with the requirements of this article.

Deleted:

1B.42.1 Conduit Entrances and Terminal Enclosures. Capacities of conduit entrances and terminal enclosures for phase conductors shall be as required for conductors sized in

Deleted: 100702

IP7014212

accordance with the requirements of the ICEA-NEMA standard for ampacities of cables in open-top cable trays, ICEA Pub. No. P-54-440 (Second Edition) and NEMA Pub. No. WC51-1975, and shall be based on installation in open-top cable tray to a 2.0 inch calculated depth of cables. The following tables in the previously referenced standard shall be used for the phase conductor materials and sizes, and cable constructions listed:

Deleted:

Table 3	Copper conductor Sizes 12 AWG through 2 AWG in three conductor cable.
Table 4	Copper conductor Sizes 1/0 AWG through 1,000 mcm in single conductor cable.
Table 20	Aluminum conductor Sizes 1/0 AWG through 1,000 mcm in single conductor cable.

Each power circuit will include a copper ground conductor or conductors having a total size coordinated with the full load current requirement of the equipment in accordance with the National Electrical Code.

1B.42.2 Conductor Terminals. Terminals for conductors 10 AWG and smaller shall be Marathon 1500 Series or acceptable equal. Terminals for conductors 8 AWG through 4/0 AWG shall be Curtis Industries, Inc., Type L, O, or S, or acceptable equal. Terminals for conductors larger than 4/0 AWG shall be tinned copper bar bus drilled and tapped with NEMA sized and spaced holes.

The sizes and types of conductor terminals for 600 volt power cable terminations in equipment shall be coordinated with the conductor and terminal connector data which will be furnished by the Engineer. The Contractor shall obtain terminal connector and conductor data from the Engineer before installing the conductor terminals.

Deleted:

Deleted: Supplier

1B.43 TERMINATION OF CABLES RATED ABOVE 600 VOLTS. The capacities of conduit entrances, terminal enclosures, and conductor terminals for cables rated above 600 volts shall be as required by the detailed specifications for the connected equipment.

1B.44 TERMINAL BLOCKS. Terminal blocks shall be furnished with white marking strips and, where permitted by the safety codes and standards, shall be without covers. Spare unused terminals shall be furnished on each terminal block for circuit modifications and for termination of all conductors in a multi-conductor control cable. Not less than two spare unused terminals shall be furnished for every 10 terminals used.

Fuses may be mounted on terminal blocks. Neither step type terminal blocks nor angle mounting of terminal blocks will be acceptable.

Deleted: 100702

IP7014213

All terminal blocks, except internal terminal blocks in factory prewired electronic systems cabinets and terminal blocks for thermocouple extension wire, shall be rated 600 volts minimum and shall have strap screw terminals. Terminal blocks for 10 AWG and smaller 600 volt insulated conductors shall be Marathon 1500 Series or acceptable equal. Terminal blocks for thermocouple extension wire shall be Buchanan Medium Duty with thermocouple contacts, or Marathon 200 Series with Omega Engineering Inc., Type TL terminal lugs for terminal blocks, or acceptable equal. Terminal blocks shall be appropriately sized for larger wire size or higher voltage insulated incoming conductors as necessary.

1B.45 FUSE BLOCKS. Where fuse blocks rated 30 amperes, 250 volts are required, they shall be modular type with bakelite frame and reinforced retaining clips. Blocks shall be Class H, 2-pole, Model No. H25030-2SR screw terminal fuse blocks as manufactured by Underwriters Safety Device Co. or acceptable equal. Blocks for other current and voltage ratings shall be similar in construction and by the same manufacturer.

1B.46 FUSES. Where slow blow fuses are required for protection of equipment, they shall be Bussmann Type MDL, Gould Shawmut Type GDL, or acceptable equal, with ampere ratings of 1/4, 1/2, 1, or 2. Where fast acting fuses are required for protection of equipment, they shall be Bussmann Type NON, Gould Shawmut Type OT, or acceptable equal, with ampere ratings of 1, 3, 6, 10, 15, 20, or 30. Where extremely fast acting fuses are required for protection of equipment, they shall be Bussmann Type KAB or acceptable equal, with ampere ratings of 1, 3, 6, 10, 15, 20, or 30.

1B.47 ELECTRICAL ACCESSORY DEVICES. Electrical accessory devices shall be furnished in accordance with the requirements stated herein unless otherwise specified in the detailed specification sections.

1B.47.1 Electrical Instruments. All indicating instruments for electrical quantities shall be of the switchboard type with 1 percent accuracy classification, shall be designed for flush mounting, and shall be approximately 4 inches square. All instrument scales shall consist of black markings on a white background. Any instrument which is checked in the field and found to be inaccurate in excess of 2 percent will be returned to the Contractor for calibration or replacement without cost to IPSC. All ac instruments shall be designed for operation through 5 ampere current transformer secondaries and 120 volt potential transformer secondaries. Instruments shall be Yokogawa Corporation (General Electric) Type AB-40, Weschler Electric Corporation (Westinghouse) Type 241, or acceptable equal.

Deleted: Supplier

Deleted: the Purchaser.

Deleted:

1B.47.2 Control Relays. General service auxiliary relays (industrial grade) shall be Allen-Bradley Bulletin 700 Type P or acceptable equal. Where current carrying requirements exceed the capacity of the general service auxiliary relays, auxiliary relays shall be Allen-Bradley Bulletin 700 Type PK, General Electric Type HFA or HGA, Westinghouse Type MG-6, or acceptable equal.

Deleted: 100702

IP7014214

Timing relays for general service shall be Allen-Bradley Bulletin 700 Type PT or acceptable equal, where the delay period is 1 minute or less. Timing relays for critical service shall be Agastat Series 7000 or acceptable equal.

1B.47.3 Control Switches. Control switches shall be 600 volt, 20 ampere, multistage, rotary type. Switches shall have black, fixed, modern, pistol grip type handles and engraved black plastic escutcheon plates with targets. Switches shall be General Electric Type SB-1, General Electric Type SB-10, Electro Switch Type 24, Electro Switch Type W, or acceptable equal. All General Electric switches shall be furnished with large covers.

Deleted:

1B.47.4 Push Buttons and Selector Switches. Push buttons and selector switches shall be heavy-duty oiltight, Honeywell Micro Switch Type PT, Square D Class 9001 Type K, or acceptable equal.

1B.47.5 Toggle Switches. Toggle switches shall be Honeywell Micro Switch Type TL or acceptable equal.

1B.47.6 Indicating Lights. Status indicating lights shall be either Micro Switch Type PTW, with Type 387 lamps, plastic lenses, and appropriately sized resistors; General Electric Type ET-16, with incandescent screw connectors, plastic lenses, and appropriately sized resistors; or acceptable equal.

Engraved indicating lights shall be Honeywell Micro Switch Series 2 with Type 387 lamps or acceptable equal.

Indicating light lens colors shall be coordinated with indicated conditions as specified in the following table. Indicating lights shall be energized when the condition exists and shall be de-energized when the condition does not exist:

Lens Color	Condition
Red	Equipment energized, such as motor running, valve open, or breaker closed.
Green	Equipment de-energized, such as motor stopped, valve closed, or breaker open.
White	Equipment abnormality, such as motor trip or breaker trip.
Amber or yellow	Equipment start permissive.

Deleted: 100702

IP7014215

Indicating lights for local control stations shall be heavy-duty oiltight, Square D Class 9001 Type K, Allen-Bradley Bulletin 800T, or acceptable equal.

1B.47.7 Alarm Contacts. Alarm contacts for remote annunciation shall be suitable for operation at 125 volts dc. All contacts shall be rated at least 0.5 ampere make or break, at 125 volts dc.

Alarm contacts shall be normally closed contacts which open to alarm condition.

1B.48 MOLDED CASE CIRCUIT BREAKERS. Molded case circuit breakers used in equipment furnished under these specifications shall be as listed in the following tables:

AC SERVICE

				Interrupting Capacity (NEMA)			
				AC		DC	
Poles	Service Volts ac	Frame Rating amperes	Trip Range amperes	Symmetrical Amperes	Volts	Amperes	Volts
1	120	100	15 - 100	10,000	120	5,000	125
2	240	100	15 - 100	10,000	240	5,000	250
2	480	100	15 - 100	14,000	480	10,000	250
3	240	100	15 - 100	10,000	240	*	*
3	480	100	15 - 100	14,000	480	*	*
2	480	225		18,000	480	10,000	250
3	480	225		18,000	480	*	*

*The construction of all 3-pole circuit breakers furnished under these specifications shall be equivalent to the single-pole and 2-pole circuit breakers specified. This shall include heavy-duty construction and spacing between poles as required for dc rated circuit breakers.

Deleted:

Deleted: 100702

IP7014216

DC SERVICE

Poles	Service Volts dc	Frame Rating amperes	Trip Range amperes	Interrupting Capacity (NEMA) AC Symmetrical Amperes	AC Volts	DC Amperes	DC Volts
2	125	100	15 - 100	10,000	120	5,000	125

1B.49 WEATHERPROOFING. All outdoor electrical equipment and all appurtenances shall be designed for satisfactory operation during 60 mile per hour wind and driving rain. All exposed unpainted parts shall be fabricated of corrosion-resisting metal. All ventilating openings shall be louvered on outdoor electrical equipment to prevent entrance of rain under weather conditions described above. All ventilating openings on outdoor electrical equipment shall be equipped with fine mesh filters and stainless steel bug screens.

Deleted:

1B.50 FACTORY PREWIRED ELECTRONIC SYSTEMS CABINETS. Internal wiring in factory prewired electronic systems cabinets may be installed according to the Contractor's standard as to wire size, insulation, and method of termination on internal equipment except that insulation for all wiring (including circuit board wiring, back plane wiring, and power supply wiring) shall meet the VW-1 (vertical wire) flame test requirements of UL 44. Interconnecting cables between devices shall meet the flame test requirements of IEEE Standard 383 (ANSI N41.10) using a gas burner flame source. The individual conductors of the interconnecting cables shall meet the flame resisting test requirements of ICEA S-19-81, Paragraph 6.19.6. Identification of conductors may be done by insulation color coding identified on drawings or by printed wiring lists. Terminal blocks for connection of external circuits into factory prewired electronic systems cabinets shall meet all the requirements of the article TERMINAL BLOCKS in this section.

Deleted: Supplier's

Deleted:

Deleted:

1B.51 SOLID-STATE LOGIC SYSTEMS. All electrical equipment containing solid-state logic systems shall be tested in accordance with the manufacturer's standard tests for a minimum of 120 hours under power prior to shipment from the factory. The components to be tested shall include the electronic devices, power supplies, input-output devices, operator interface devices, and interconnecting cables provided with the system. The system shall be tested as a complete assembly. Testing of individual components or modules will not be acceptable as system tests.

Deleted:

A description of the manufacturer's standard factory test procedure shall be provided in the proposal.

Deleted: 100702

IP7014217

The system test shall include a means of confirming the logic or mathematical design response of the system by simulating changes in system input. The test shall repeatedly cycle the system through all operations it will be expected to perform in service with loads on the various components equivalent to those which will be experienced in actual service.

The test shall include adjustment of power source voltages to the high and low limits. The test shall verify correct operation of the system at both high and low power source voltage limits. The system shall be tested and verified capable of providing surge withstand capability in accordance with the requirements of ANSI C37.90.1.

The test shall be performed with the solid-state logic system exposed to ambient temperature appropriate to the service for which the associated electrical equipment is designed.

Written test results shall be provided indicating when test occurred, component failures, voltage levels, and additional information as required to document the results of the testing.

1B.52 MOTOR CONTROL. The Typical Schematics for Combination Starters following this section indicate the wiring of the ac motor starters which will be furnished by IPSC for 460 volt, 3-phase motors rated 100 horsepower and smaller.

The Contractor shall assure that the control devices and the control wiring, including terminal designations, are compatible with the appropriate starter control voltages and wiring as indicated.

1B.52.1 Contractor-Furnished AC Motor Starters. The ac motor starters furnished with the equipment shall provide wiring in accordance with the Typical Schematics for Combination Starters following this section and in addition shall conform to the requirements which follow.

Motor starters for 480 volt ac service shall include 480 volt, 3-phase, 60 hertz contactors with manual reset thermal overload relays, 120 volt ac operating coils, and 480 to 120 volt dry type control transformers complete with one secondary lead fused and the other secondary lead grounded.

Single-speed starters shall be furnished with three overload relays. Two-speed starters shall be furnished with six overload relays.

Two-speed starters and reversing starters, where required, shall be mechanically and electrically interlocked so that only one set of contacts can be closed at any one time.

Auxiliary contacts shall be mechanically operated by the starter contactor. The quantity of contacts shall be as required, but not less than the quantity indicated on the Typical Schematics for Combination Starters. Terminal blocks shall be furnished as indicated on the Typical Schematics for Combination Starters.

Deleted:

Deleted:

Deleted: the Purchaser

Deleted: The Typical Schematic for 480 V Circuit Breakers following this section indicates the wiring of the 480 volt circuit breakers which will be furnished by the Purchaser for 460 volt, 3-phase motors rated larger than 100 horsepower.¶
¶
The Typical Schematic for 4160 V Feeder Controllers following this section indicates the wiring of the 4160 volt feeder controllers which will be furnished by the Purchaser for 4000 volt, 3-phase motors.¶
¶
The Typical Schematic for 4160V Feeder Circuit Breakers following this section indicates the wiring of the 4160 volt feeder circuit breakers which will be furnished by the Purchaser for 4000 volt, 3-phase motors.¶
¶
The switchgear breaker and feeder controller operating coils are momentarily energized to close and momentarily energized to open the breakers and feeder controllers.¶
¶

Deleted: Supplier

Deleted: , breaker, and controller

Deleted: Supplier-Furnished

Deleted: Large size starters which require line voltage to energize the operating coils shall be equipped with auxiliary contactors for use in the operating coil circuit. These contactors shall be operated from the 120 volt circuit of the control transformers.¶
¶

Deleted:

Deleted: 100702

IP7014218

Control transformers shall have 60 hertz ac ratings permitting operation at a primary voltage from 440 to 480 volts at a voltage ratio of 4:1. Assuming 440 volts on the primary terminals, each control transformer shall maintain a potential of not less than 105 volts at its secondary terminals during starter coil inrush, while simultaneously serving an additional load of 100 volt-amperes at 50 percent power factor.

Starters for 120 volt or 240 volt ac service shall be similar to 480 volt starters except control transformers will not be required.

1B.52.2 Contractor-Furnished DC Motor Starters. Magnetic starters for dc service shall be suitable for starting 125 volt dc motors.

Deleted: Supplier-Furnished

Each dc starter shall be complete with 125 volt dc operating coils, contactors, starting resistors as required, six electrically separate auxiliary relay contacts (three normally open and three normally closed), one overload relay, and a 36 point terminal block. All auxiliary and overload contacts shall be wired to terminal blocks for external use.

Deleted: 100702

IP7014219

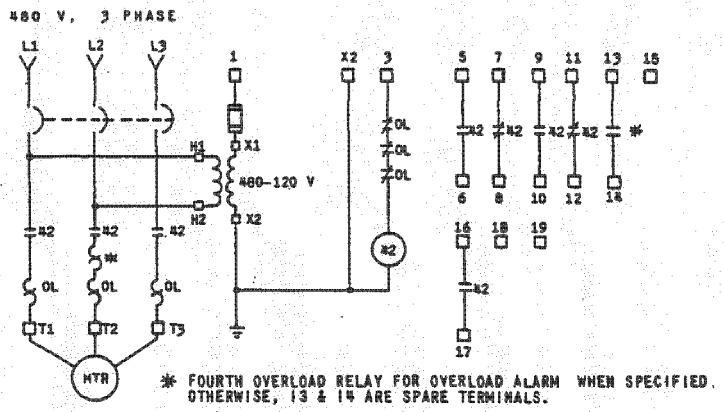

WIRING DIAGRAM COMBINATION FULL VOLTAGE NON-REVERSING STARTER
NOTE: THIS DOES NOT APPLY TO SIZE 5 AND LARGER

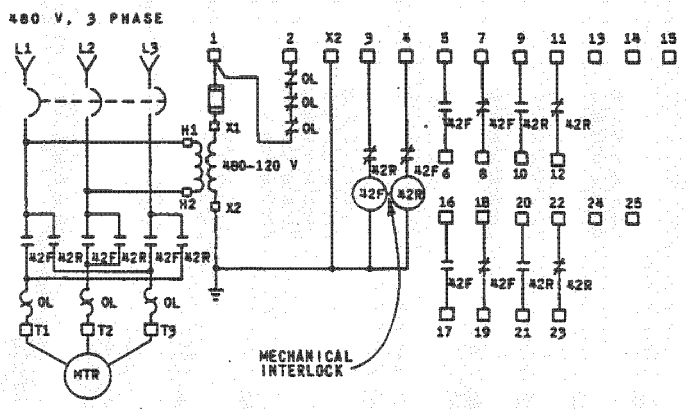

WIRING DIAGRAM COMBINATION FULL VOLTAGE REVERSING STARTER
NOTE: THIS DOES NOT APPLY TO SIZE 5 AND LARGER

P-EL-056-1

BLACK & VEATCH CONSULTING ENGINEERS		PROJECT _____ SPEC _____
	TYPICAL SCHEMATICS FOR COMBINATION STARTERS	

Deleted: 100702

IP7014220

Section 1C - ENGINEERING DATA

1C.1 GENERAL. This section stipulates the requirements for engineering data which the Contractor shall submit to the Engineer for design information and review. Compliance with the specified schedule for engineering data submittal is vital to the scheduled progress and completion of the project.

Deleted: Supplier

All engineering data shall be identified with the equipment or structure it represents by use of the nomenclature established by the purchase order documents. Equipment drawings shall have the Engineer's equipment name and number clearly displayed. Material drawings shall have the Engineer's structure name and structure number (when applicable) clearly displayed.

1C.1.1 Document Index. A document index listing all drawings and data to be submitted shall be included with the initial submittal. The document index shall be resubmitted as required to indicate revisions to the list. The list shall include the document number and title, if known, or the general document category, e.g., wiring diagrams for each item of equipment.

1C.2 CORRESPONDENCE. Correspondence, drawings, and data shall be addressed to the Engineer and the Owner as follows:

Original to IPSC:

Deleted: the Owner:

Intermountain Power Project
850 West Brush Wellman Road
Delta, Utah 84624

Attention: Jon Christensen

Copy to IPSC:

Deleted: the Owner:

Intermountain Power Project
850 West Brush Wellman Road
Delta, Utah 84624

Attention: (Later)

Copy to the Engineer:

Black & Veatch Corporation
11401 Lamar Avenue
Overland Park, Kansas 66211

Attention: John S. Morrow

Deleted: 100702

IP7014221

Letters of transmittal shall accompany all submittals of engineering data and shall include a list of the data included in the transmittal. Lists shall include manufacturer's drawing numbers identified with the corresponding project equipment or structure nomenclature as applicable. All correspondence shall be identified with the project name, specification number, Engineer's project number, and manufacturer's order number.

1C.3 REVIEW OF ENGINEERING DATA. The Engineer's review of engineering data will cover only general conformity of the data to the specifications and documents, external connections, interfaces with equipment and materials furnished under separate specifications, and dimensions which affect plant arrangements. The Engineer's review does not indicate a thorough review of all dimensions, quantities, and details of the equipment, material, device, or item indicated or the accuracy of the information submitted; nor shall review by the Engineer be construed as relieving the Contractor from any responsibility for errors or deviations from the requirements of the purchase order documents.

Deleted:

Deleted: Supplier

All engineering data submitted, after final processing by the Engineer shall become a part of the purchase order documents and the work indicated or described thereby shall be performed in conformity therewith, unless otherwise required by IPSC.

Deleted: the Purchaser.

1C.4 PERFORMANCE CURVES. If applicable, six copies of the performance curves shall be submitted as scheduled in Section 1A.

1C.5 DESIGN DATA. If applicable, six copies of the design data shall be submitted as scheduled in Section 1A.

1C.6 TEST AND INSPECTION DATA. Certified copies of test and inspection reports shall be provided by the Contractor for all tests and inspections conducted on the specified equipment. Six copies of each report shall be submitted to the Engineer within 2 weeks after completion of each test or inspection.

Deleted: Supplier

1C.7 MOTOR INFORMATION. Motor Information Sheets are included at the end of this section. If applicable, a copy of the appropriate sheets shall be completed for each motor furnished under these specifications. Copies of the completed sheets shall be submitted as specified in this section and as scheduled in Section 1A. The number of copies submitted shall be the same as for other manufacturer's drawings.

1C.8 DRAWINGS. Drawings shall be in sufficient detail to indicate the kind, size, arrangement, weights of each component, breakdown for shipment, and operation of component materials and devices; the external connections, anchorages, and supports required; the dimensions needed for installation and correlation with other materials and equipment; and the information specifically requested in the drawing submittal schedule specified in Section 1A.

Deleted: 100702

IP7014222

Drawings shall be fully completed and certified by the Contractor as to the compliance of the information contained thereon with the requirements of these specifications. Drawings shall have title block entries clearly indicating the drawing is certified. Drawings will be reviewed by the Engineer and processed as specified in this Section 1C.

Each drawing submitted shall be clearly marked with the name of the project, the unit designation, the specification title, the specification number, the project equipment or structure nomenclature, the Contractor's name, and the Engineer's drawing number (after it is assigned upon initial submittal of the drawing). Catalog pages are not acceptable. If standard drawings are submitted, the applicable equipment and devices furnished shall be clearly marked. Separate drawings shall be submitted for each of the two units.

Drawings shall be submitted in accordance with the schedule specified in Section 1A.

1C.8.1 Drawing Submittal. Six prints of each drawing shall be submitted. Prints shall be black line on white background (preferred) or blue line on white background. Print size shall not exceed 34 inches by 44 inches unless due to the size of the equipment larger drawings are necessary. Drawings shall be folded to 8-1/2 inches by 11 inches. Reproducible prints shall be submitted rolled.

Engineer will use either a 35 mm microfilm system or an electronic imaging system in processing drawings. All drawings shall be suitable for electronic imaging and shall have maximum levels of contrast. Drawing and lettering practices shall be in general accordance with the requirements of US Department of Defense, Military Standards - Engineering Drawing Practices, DOD-STD-100C. Drawings submitted which are not suitable for electronic imaging will not be accepted.

1C.8.2 Drawing Processing. A copy of each drawing reviewed will be returned to the Contractor as stipulated herein. Copies of drawings returned to the Contractor will be in the form of a print with the Engineer's marking, a print made from a microfilm of the marked up drawing, or a marked reproducible print for drawings larger than 30 inches by 42 inches in size, at the option of the Engineer.

When drawings and data are returned marked EXCEPTIONS NOTED, the changes shall be made as noted thereon, and six corrected copies shall be submitted to the Engineer.

When the drawings and data are returned marked RETURNED FOR CORRECTION, the corrections shall be made as noted thereon and as instructed by the Engineer, and six corrected copies shall be submitted.

When a drawing is revised and resubmitted, the Contractor shall include an issue number and revision description in the drawing revision block. All revisions pertaining to that particular drawing issue shall be backcircled or otherwise clearly noted on the drawing.

Deleted: Supplier

Deleted: the General Terms and Conditions.

Deleted:

Deleted: Supplier's

Deleted:

Deleted: 1C.9 WIRING DIAGRAMS. Connection and interconnection wiring diagrams furnished by the Supplier shall be as indicated in ANSI Y14.15a-1971, Section 15-11, Article 15-11.3.2.1 and Figure 11-4 except that function information and wire run code are not required. Each device connection shall have near each termination, indicated in breaks, conductor identification consisting of the opposite end destination. The wiring diagrams shall be drawn with all devices indicated in their relative physical locations and shall represent the equipment and terminals arranged as they would appear to a person wiring the equipment.¶
¶
Wiring diagrams shall be prepared on sheets approximately 30 inches by 42 inches. Where interconnecting wiring from different items of equipment or sectional wiring diagrams of the same item of equipment appear on different wiring diagram sheets, all interconnections shall be clearly identified. Where sectional wiring

Deleted: diagrams are required for a single item of equipment, such as a relay panel or control panel, that section of the panel which is represented by each individual wiring diagram sheet shall be keyed on that sheet in a manner acceptable

Deleted: 100702

IP7014223

When the drawings are returned marked NO EXCEPTIONS NOTED or RECEIVED FOR DISTRIBUTION, the Contractor shall submit drawings for final distribution as specified hereinafter under Final Drawings. Drawings marked RECEIVED FOR DISTRIBUTION have been filed, but have not been reviewed.

No work shall be performed in connection with the fabrication or manufacture of equipment and materials until the drawings and data therefor have been reviewed by the Engineer except at the Contractor's own risk and responsibility. Work may proceed on equipment and materials when the drawings and data therefor have been returned marked NO EXCEPTIONS NOTED or RECEIVED FOR DISTRIBUTION, and when drawings have been returned marked EXCEPTIONS NOTED, provided the work is performed in accordance with the Engineer's notations.

If changes are made to the equipment at the project site, revised drawings indicating the changes made shall be prepared by the Contractor and submitted to the Engineer.

1C.8.3 Final Drawings. Upon receipt from the Engineer of drawings marked NO EXCEPTIONS NOTED or RECEIVED FOR DISTRIBUTION, the Contractor shall transmit seven additional prints of each drawing to the Engineer for final distribution. However, if during the submittal process, the Contractor makes further changes to drawings that have been reviewed by the Engineer, the changes shall be clearly marked on the drawings and the submittal process shall be repeated.

1C.8.4 Reproducibles. One reproducible print of each final electrical wiring and elementary diagram for equipment shall be furnished. The reproducible shall be right reading on 0.004 inch thick Du Pont wash-off mylar and shall not exceed 34 inches by 44 inches in size. Diazo sepias, black line mylar, or auto-positive reproducibles will not be acceptable. Such drawings shall be submitted to the Engineer in rolls and not folded.

1C.9 WIRING DIAGRAMS. Connection and interconnection wiring diagrams furnished by the Contractor shall be as indicated in ANSI Y14.15a-1971, Section 15-11, Article 15-11.3.2.1 and Figure 11-4 except that function information and wire run code are not required. Each device connection shall have near each termination, indicated in breaks, conductor identification consisting of the opposite end destination. The wiring diagrams shall be drawn with all devices indicated in their relative physical locations and shall represent the equipment and terminals arranged as they would appear to a person wiring the equipment.

Wiring diagrams shall be prepared on sheets approximately 30 inches by 42 inches. Where interconnecting wiring from different items of equipment or sectional wiring diagrams of the same item of equipment appear on different wiring diagram sheets, all interconnections shall be clearly identified. Where sectional wiring diagrams are required for a single item of equipment, such as a relay panel or control panel, that section of the panel which is represented by each individual wiring diagram sheet shall be keyed on that sheet in a manner acceptable to the Engineer.

Deleted: 100702

IP7014224

Information indicated on the Contractor's drawings shall include wiring of the individual panel items as they actually will appear in the panel, contact arrangements of switches, and internal wiring of relays and instruments.

Deleted: Supplier's

Elementary diagrams shall be cross-referenced to terminal markings on the connection and interconnection diagrams, but need not indicate complete details of circuits external to the panels. Each item of panel mounted equipment indicated on the diagrams shall be identified by item number and name.

Sufficient space shall be left on IPSC's side of outgoing terminal blocks for adding cable color codes and circuit numbers. Color codes and circuit numbers will be added by the Engineer. The Contractor shall be responsible for adding the color codes and circuit numbers to his drawings after they are assigned by the Engineer.

Deleted: the Purchaser's

Deleted: Supplier

1C.10 INSTRUCTION MANUALS. Instruction manuals for the unloading, storage, installation, operation, and maintenance of the equipment shall be furnished. The number of manuals and their required time of delivery are specified in the Schedule of Activities in Section 1A.

1C.10.1 Content. Manuals shall include the following information specific to the furnished equipment:

Table of Contents and index tabs.

Specifications, test data, and curves.

Description of the equipment.

Instructions in the methods of receiving, inspection, storage, and handling prior to installation.

Installation instructions, including instructions for any modifications that are required for existing equipment.

Operating instructions.

Maintenance instructions.

Assembly drawings.

Parts lists.

List of acceptable lubricants.

Deleted: 100702

IP7014225

Nameplate information and shop order numbers for each item of equipment and component part thereof.

List of recommended spare parts.

List of maintenance tools furnished with the equipment.

The above listed requirements are minimum; however, requirements which are clearly not applicable to the equipment may be deleted. Additional information which is necessary for proper operation and care of the equipment shall also be included.

1C.10.2 Binding. Each copy of the manuals shall be assembled and bound in a special binder in accordance with the following:

Manufacturer	Viatech Publishing Solutions 424 North Cedarbrook Avenue Springfield, Missouri 65802 Phone: 1-800-888-0823
Direct contact	Karen Bailey 10621 W. 98th Street Overland Park, Kansas 66214 Email: kbailey@viatechpub.com Phone: 913-894-9699 Fax: 913-894-2505
Binder type	Swing Hinge C78 Split Prong.
Construction	Stiff binder board.
Covering	Supported vinyl, skytogen liner.
Color	Black.
Imprinting	Foil stamp in accordance with drawing bound at end of this section. Color of imprinting to be gold.
Capacities available	Split prong, swing hinge 2 inch or 3 inch as required.

Deleted: Color ... [1]

Binder capacities shall not exceed 3 inches, nor shall material included exceed the designed binder capacity. If material to be bound exceeds capacity rating, multiple volumes shall be

Deleted: 100702

IP7014226

furnished. Binder capacity should not be more than approximately 1/2 inch greater than the thickness of the material within the binder.

1C.10.3 Submittal. One complete "proof copy" of the proposed manual(s) shall be submitted to the Engineer for review. The Engineer's review will be for general conformity to specified requirements and is not intended to constitute detailed review of content.

The copy submitted for review shall be complete with binder; however, to expedite the manufacture and shipment of the binders, the binder supplier may contact the Engineer directly to secure acceptance of the binder and its imprinting on the basis of the supplier's layout drawing. This will enable manufacturer to proceed without requiring the submittal of a binder proof copy.

Upon acceptance of the manual by the Engineer, the Contractor shall distribute the remaining copies to the addresses designated by the Engineer. Separate manuals shall be provided for each of the two units.

Deleted: 100702

IP7014227

TYPICAL INSTRUCTION BOOK COVER

(Backbone)	(Cover)	
VARIABLE FREQUENCY I. D. FAN DRIVES	INTERMOUNTAIN POWER PROJECT	36
	INTERMOUNTAIN GENERATING STATION	24 24
INTERMOUNTAIN POWER PROJECT	INSTRUCTION BOOK FOR VARIABLE FREQUENCY I. D. FAN DRIVES VOLUME 1	36 36 36 36
INTERMOUNTAIN GENERATING STATION	SUPPLIER/MANUFACTURER ADDRESS ADDRESS	24 24
FILE NUMBER**	BLACK & VEATCH CORPORATION 11401 LAMAR AVENUE OVERLAND PARK, KANSAS 66211	14 14
VOLUME 1		

Deleted: ¶
¶
¶
ADJUSTABLE FREQUENCY¶
I. D. FAN DRIVES¶
¶
¶
¶
¶
INTERMOUNTAIN POWER PROJECT¶
¶
¶
¶
¶
¶
¶
INTERMOUNTAIN GENERATING STATION¶
¶
¶
¶
¶
¶
¶
¶
¶
¶
FILE¶
NUMBER**¶
¶
¶
¶
¶
¶
VOLUME 1¶
¶ ... [2]

NOTES:
1. All imprinting shall be "News Gothic" style font.
2. All backbone imprinting shall be 14 point.
3. Cover imprinting shall be point sizes indicated in column to right of cover illustration.
4. *Volume number required only if instructions are contained in more than one volume.
5. **B&V assigned file number.

Deleted: 100702

IP7014228

MOTOR INFORMATION SHEET

MOTOR_____

MOTOR DATA TO BE SUBMITTED

MANUFACTURER _____, MODEL _____

HP _____, VOLTS _____, PHASE _____, HERTZ _____

SERVICE FACTOR _____, NEMA DESIGN LETTER _____, FULL LOAD SPEED _____ RPM

ENCLOSURE: TYPE _____, FRAME SIZE _____

INSULATION SYSTEM: CLASS _____ STANDARD _____ SEALED _____, AMB TEMP _____° C

TEMP RISE _____° C BY RESISTANCE AT SERVICE FACTOR OF 1.0 _____, 1.15 _____

FULL LOAD CURRENT _____ AMP, LOCKED-ROTOR CURRENT _____ AMP

SPACE HEATER (IF FURNISHED): NUMBER OF UNITS _____, UNIT RATING, WATTS _____
VOLTS _____, PHASE _____

BEARINGS: TYPE _____, ABMA L-10 RATING LIFE, NOT LESS THAN _____ H

LUBRICATION: TYPE _____ SYSTEM _____

SOUND LEVELS:

SOUND POWER LEVEL
RE 10^{12} WATTS _____ dBA
FREE FIELD

OVERALL MEAN NO-LOAD SOUND PRESSURE LEVEL
RE 20 MICROPASCALS (0.0002 MICROBAR) REFERENCE
DISTANCE OF 1 METER _____ 2 METERS _____;
_____ dBA FREE FIELD

TOTAL MOTOR WT _____ LB

FOR MULTISPEED MOTORS:
VARIABLE TORQUE _____, CONSTANT TORQUE _____, CONSTANT HORSEPOWER _____
MOTOR TERMINAL CONNECTION DIAGRAM NO. _____ (ATTACH COPY OF DIAGRAM)

FOR WOUND ROTOR MOTORS:
SEC VOLTS _____, SEC AMP _____, SEC RES, OHMS M-M AT 25° C _____

FOR MOTORS IN HAZARDOUS LOCATIONS:
MOTOR ENCLOSURE SURFACE TEMPERATURE, _____° C AT SERVICE FACTOR OF 1.0 _____,
1.15 _____. WILL MOTOR CONTAIN A SURFACE TEMPERATURE CONTROL THERMOSTAT REQUIRING
CONNECTION INTO THE MOTOR STARTER CONTROL CIRCUIT: YES _____, NO _____

FOR DUST IGNITIONPROOF MOTORS: MOTOR ENCLOSURE SURFACE TEMPERATURE RISE UNDER ANY ABNORMAL OPERATING CONDITION INCLUDING OVERLOAD, SINGLE-PHASING, ETC., ASSUMING ENCLOSURE SURFACE TEMPERATURE OF 120° C WHEN ABNORMAL CONDITION DEVELOPS:

MINIMUM TIME TO REACH 165° C _____ S

MAXIMUM RATE OF RISE _____° C IN 5 S

ADDITIONAL MOTOR DATA FOR MOTORS LARGER THAN 200 HP AND FOR ALL MOTORS RATED ABOVE 600 VOLTS SHALL BE SUBMITTED ON SHEETS 2 AND 3.

Deleted: 100702

IP7014229

MOTOR INFORMATION SHEET

MOTOR_____

ADDITIONAL MOTOR DATA TO BE SUBMITTED FOR MOTORS LARGER THAN 200 HP AND FOR ALL MOTORS RATED ABOVE 600 VOLTS

EFFICIENCY, PERCENT GUARANTEED, LOAD: 1/2 _____ 3/4 _____ 4/4 _____
POWER FACTOR, PERCENT GUARANTEED, LOAD: 1/2 _____ 3/4 _____ 4/4 _____

MINIMUM STARTING VOLTAGE IN PERCENT OF RATED VOLTAGE:
CALCULATED: _____
SPECIFIED: _____

OCTAVE BAND MEAN NO-LOAD SOUND PRESSURE LEVEL RE 20 MICROPASCALS (0.0002 MICROBAR)
REFERENCE DISTANCE OF 1 METER _____; 2 METERS _____

CENTER FREQUENCY, HZ	LEVEL, dBC
31.5	
63	
125	
250	
500	
1,000	
2,000	
4,000	
8,000	

OUTLINE DWG NO. _____

ACCELERATING TIME:
AT RATED VOLTAGE _____ S
AT MINIMUM SPECIFIED
STARTING VOLTAGE _____ S
LOCKED-ROTOR PF _____ PERCENT
LOCKED-ROTOR TORQUE _____ LB-FT
PULL-UP TORQUE _____ LB-FT
BREAKDOWN TORQUE _____ LB-FT
TOTAL ROTOR WT _____ LB
ROTOR INERTIA _____ LB-FT^2
OPEN CIR. TIME CONSTANT _____ S
FOR VERTICAL MOTORS:
REED FREQUENCY _____ HZ

THERMAL LIMIT CURVE UNDER LOCKED-ROTOR, ACCELERATION, AND RUNNING OVERLOAD CONDITIONS; AND TIME-CURRENT CURVES DURING ACCELERATION AT RATED VOLTAGE AND AT MINIMUM SPECIFIED STARTING VOLTAGE CURVE NO. _____ (ATTACH CURVE)

LOCKED-ROTOR SAFE STALLED TIME, S	RATED VOLTAGE	MINIMUM SPECIFIED STARTING VOLTAGE
MOTOR INITIALLY AT MAXIMUM SPECIFIED AMBIENT TEMPERATURE		
MOTOR INITIALLY AT SERVICE FACTOR LOAD OPERATING TEMPERATURE		

Deleted: 100702

IP7014230

MOTOR_____

ADDITIONAL MOTOR DATA TO BE SUBMITTED FOR MOTORS LARGER THAN 200 HP AND FOR ALL MOTORS RATED ABOVE 600 VOLTS (Continued)

SPEED-TORQUE-CURRENT CURVES AT RATED VOLTAGE AND AT MINIMUM SPECIFIED STARTING VOLTAGE, IN PERCENT OF FULL LOAD OR CURVE NUMBERS _____ (ATTACH CURVES)	RATED VOLTAGE		MINIMUM SPECIFIED STARTING VOLTAGE	
	TORQUE, LB-FT	CURRENT, AMP	TORQUE, LB-FT	CURRENT, AMP
AT SPEED CORRESPONDING TO MAXIMUM TORQUE				
AT 80% SPEED				
AT 60% SPEED				
AT LOCKED-ROTOR				

NUMBER OF SUCCESSIVE STARTS:	AT RATED VOLTAGE	AT MINIMUM SPECIFIED STARTING VOLTAGE
MOTOR INITIALLY AT MAXIMUM SPECIFIED AMBIENT TEMPERATURE (COLD)		
MOTOR INITIALLY AT SERVICE FACTOR LOAD OPERATING TEMPERATURE (HOT)		
COOLING PERIOD REQUIRED AFTER COMPLETION OF THE PRECEDING MAXIMUM NUMBER OF SUCCESSIVE STARTS BEFORE MAKING ADDITIONAL STARTS BASED ON THE FOLLOWING COOLING CONDITIONS, MINUTES		
MOTOR RUNNING AT SERVICE FACTOR LOAD		
MOTOR RUNNING WITH DRIVEN EQUIPMENT UNLOADED		
MOTOR DE-ENERGIZED, COASTED TO STOP, AND LEFT IDLE		

FOR MOTORS FOR WHICH DIFFERENTIAL PROTECTION IS SPECIFIED, STATOR CONN: WYE_____, DELTA_____

FOR MOTORS REQUIRING INTEGRAL WATER COOLING OF BEARING OIL:
FLOW OF COOLING WATER REQUIRED _____ GPM
MAXIMUM COOLING WATER INLET TEMPERATURE _____ ° C
FOR MOTORS CONNECTED TO EXTERNAL LUBRICANT RECIRCULATING SYSTEM:
FLOW OF OIL REQUIRED TO MOTOR BEARINGS: _____ GPM AT _____ ° C MAXIMUM AT _____ PSI
BEARING HEAT REJECTION TO OIL: _____ BTU/H
OUTLET TEMPERATURE OF OIL FROM MOTOR BEARINGS: ____ ° C MAXIMUM
FOR HORIZONTAL MOTORS RATED 1,000 HP AND LARGER AT 3,600 RPM AND FOR ALL MOTORS RATED 3,500 HP AND LARGER AT ALL SPEEDS:
CRITICAL SPEEDS: FIRST CRITICAL _____ RPM
SECOND CRITICAL _____ RPM

Deleted: 100702

IP7014231

Page 6: [1] Deleted | Julie A. Gregory | 12/12/2002 10:18 AM

Color

Royal blue (Color Code PVS 4117A).

Page 8: [2] Deleted | Julie A. Gregory | 12/12/2002 10:18 AM

ADJUSTABLE FREQUENCY I. D. FAN DRIVES

INTERMOUNTAIN POWER PROJECT

INTERMOUNTAIN GENERATING STATION

FILE NUMBER**

VOLUME 1

INTERMOUNTAIN POWER PROJECT 36

INTERMOUNTAIN GENERATING STATION 24
24

INSTRUCTION BOOK
FOR
ADJUSTABLE FREQUENCY
I. D. FAN DRIVES
VOLUME 1

36
36
36
36

SUPPLIER/MANUFACTURER
ADDRESS
ADDRESS

24
24

BLACK & VEATCH CORPORATION
11401 LAMAR AVENUE
OVERLAND PARK, KANSAS 66211

14
14

IP7014232

Section 1Q - GENERAL QUALITY SYSTEM REQUIREMENTS

1Q.1 PURPOSE/SCOPE. The purpose of this supplemental document to the technical requirements is to establish a set of requirements pertaining to the quality of supplied equipment and commodities.

1Q.2 QUALITY SYSTEM. It is the responsibility of the Contractor to define and implement a detailed and documented quality management system which ensures that all equipment and commodities supplied are in conformance with required drawings and/or specifications and which meets all the guidelines (requirements) set forth in this document. The system shall be capable of providing assurance that design, purchasing, materials, manufacturing, examination and testing of equipment, shipping, storage, and related services comply with the requirements of the purchase order.

The Contractor's quality system shall include, at a minimum, procedures or methods to ensure that the following are controlled:

Design documents, drawings, specifications, quality assurance procedures, quality records, inspection procedures, inspection and test status, and purchase documents maintained current, accurate, and under control.

Purchased materials, equipment, and services conform to the requirements of this purchase order.

Receipt inspection, in-process inspection, examination, testing, and checkouts conducted.

Shipping, storage, and preservation of equipment and commodities supplied meet purchase order requirements.

Adequate inspection of subcontracted work.

Control of special processes such as welding, heat treating, hot forming, and nondestructive testing.

Proper methods employed for the qualification of personnel who are performing special processes: welding, nondestructive examinations, coatings, etc.

Inspection, measuring, and test equipment.

Procedures that document and control the verification, storage, use, and maintenance of customer supplied product provided for incorporation into manufactured equipment or commodities.

IP7014233

Any applicable commercial standards (such as ANSI, AGMA, API, ASME, etc.) should also be incorporated into this system. This system shall be made available to the Engineer's Quality Management Services (QMS) Department for review upon request.

1Q.3 QUALITY SYSTEM MANUAL. The quality system shall be documented in a quality system manual. One controlled copy of the manual shall be submitted to the Engineer's QMS Department. The quality system manual shall be kept current by submittal of revisions as applicable throughout the life of the purchase order.

1Q.4 SUBCONTRACTORS. Contractor shall notify the Engineer in writing prior to the award of this purchase order of the intention to use subcontractors. If, at the time of award of this purchase order, the prime contractor does not know the name of the subcontractor, the prime contractor shall provide the name, type, and location of the subcontractor and the Contractor's subcontractor qualification documentation prior to award of subcontractor's purchase order.

The Contractor shall ensure that subcontractors have the capabilities to fulfill purchase order requirements. Contractors shall submit objective evidence of subcontractor's capabilities, processes, or in-process work involving the fabricating and manufacturing of equipment and commodities for IPSC.

Subcontractor qualification and monitoring are the responsibility of the Contractor, in accordance with this supplemental specification, to ensure the same high quality standards. When deemed necessary, the Engineer's QMS Department has the authority to perform quality audits and inspections, and monitor and/or review subcontractor processes and facilities.

1Q.5 INSPECTIONS BY ENGINEER. Engineer's QMS Department may elect to perform inspections, quality audits, or witness testing at any time during the manufacturing process. Engineer's QMS Department may designate an authorized agent for inspections, witness testing, or quality audits. Authorized agent can be an employee of the Engineer or an out side agency. When an outside agency is designated as an authorized agent for the Engineer, such designation will be in writing with a copy provided to the Contractor. Hereinafter, when an Engineer's representative is used, it may also mean the Engineer's QMS Department or the authorized agent.

The following requirements shall apply for Engineer's inspection at the Contractor's mill, factory, yard, or warehouse.

1Q.5.1 Inspection and Test Plan. In accordance with the Schedule of Submittals, a detailed inspection and test plan (i.e., a Quality Assurance/Quality Control Plan) for the work shall be submitted to the Engineer as specified in the purchase order. The inspection and test plan is a detailed step-by-step list of operations and requirements which shall identify the inspection and testing points for major components of the work and shall be maintained current

IP7014234

throughout the purchase order. The plan shall include the Contractor's strategy for inspecting subcontractor's work, including inspection by the Contractor at his subcontractor's facilities. The Engineer's QMS Engineer will designate any test witness points or other inspection points required.

1Q.5.2 Access. Engineer will have the right to inspect the Contractor's and subcontractor's work and related documents in the course of manufacture providing no delays in manufacture are caused thereby. The Contractor is required to provide, at his own expense, reasonable facilities including tools and instruments for demonstrating acceptability of the work.

1Q.5.3 Test Witnessing. If called for in the purchase order and when designated as a hold point, witnessing of mill or factory tests must be performed in the presence of the Engineer's representative unless waived in writing by the Engineer's representative. The Contractor shall bear all expense of such tests except the compensation and expense of the Engineer's representative.

The Contractor shall inform and notify the Engineer's QMS Engineer at least 10 working days in advance of the appropriate times of inspections and tests, when such inspection and test points have been designated as required hold points for witnessing. The work shall not progress past a required inspection and test point until the Engineer's QMS Engineer has inspected the work or witnessed the designated test, or waived in writing the right to perform an inspection or to witness a test.

1Q.5.4 Corrective Action. Upon detection of a noncompliance with the requirements of the purchase order or the Contractor's quality system, the Contractor shall document the noncompliance issue and provide the Engineer's representative a copy of the report. If the Contractor does not document the noncompliance, then the Engineer's representative shall issue a corrective action report to the Contractor. The Contractor will be required to correct, in a timely manner, all deficiencies identified.

1Q.5.5 Rejection. If any items or articles are found not to meet the requirements of the specifications, the lot, or any faulty portion thereof, may be rejected. Before offering specified material or equipment for shipment, the Contractor is required to inspect the material and equipment and eliminate any items that are defective or do not meet the requirements of the purchase order. The fact that materials or equipment have been previously inspected, tested, and accepted does not relieve the Contractor of responsibility in the case of later discovery of flaws or defects.

1Q.6 RECEIPT INSPECTION. Materials or equipment purchased under this purchase order may be inspected at the specified receiving points and will either be accepted or rejected. Inspection will include the necessary testing for determining compliance with the specifications. All expense of initial acceptance tests will be borne by IPSC. The expense of subsequent tests, due to initial test failures, will be charged against the Contractor.

IP7014235

Section 1S - SEISMIC DESIGN

1S.1 GENERAL. This section specifies the general criteria and procedures that shall be used to ensure that structures, components, and equipment meet performance objectives during and following a seismic event. The intent of these procedures is to minimize the hazard to human life. Buildings and structures may be damaged but remain suitable for occupancy and use, albeit in an impaired condition. The damage is anticipated to be repairable. Components and equipment are expected to remain in place without collapsing or breaking away from supports, and to remain intact to the extent that they do not create an ignition hazard or release hazardous materials.

The building structural system shall provide a continuous load path, or paths, with adequate strength and stiffness to transfer all seismic forces from the point of application to the final point of resistance.

Components and equipment shall be attached so that seismic forces are transferred to the structural system of the building. These attachments shall be bolted, welded, or otherwise positively fastened. Frictional resistance due to gravity shall not be considered in evaluating the required resistance to seismic forces.

For seismic design of vessels, tanks, and other components, contents that are flammable, explosive, corrosive, acidic, caustic, toxic, or that otherwise present a danger to the general public if released shall be considered hazardous materials.

Seismic design shall be performed in accordance with the building code specified in the Site Meteorological and Seismic Data Sheet found at the end of this section, along with the following references:

- American Institute of Steel Construction (AISC), "Specification for Structural Steel Buildings - Allowable Stress Design and Plastic Design," 1989.
- American Institute of Steel Construction (AISQ, "Load and Resistance Factor Design Specification for Structural Steel Buildings," 1993.
- American Institute of Steel Construction (AISC), "Seismic Provisions for Structural Steel Buildings," 1997.
- American Concrete Institute (ACI), ACI 318-99, "Building Code Requirements for Structural Concrete," 1999.
- American Society of Mechanical Engineers (ASME), "Boiler and Pressure Vessel Code," 1995, and all addenda.
- American National Standards Institute (ANSI), "ASME Code for Pressure Piping, ASME B31.1 - 1995, Power Piping."
- Manufacturers Standardization Society of the Valve and Fitting Industry (MSS), MSS SP-58, "Pipe Hangers and Supports -Materials, Design, and Manufacture," 1988.
- American Petroleum Institute (API), API 650, 'Welded Steel Tanks for Oil Storage," 1993.

IP7014236

- American Water Works Association (AWWA), AWWA D100, "Welded Steel Tanks for Water Storage," 1984.
- National Fire Protection Association (NFPA), NFPA 13, "Standard for the Installation of Sprinkler Systems," 1990.
- Other nationally recognized and accepted design standards and references as appropriate.

1S.2 SEISMIC FORCES. Seismic forces shall be determined from the basic seismic parameters given in the Site Meteorological and Seismic Data Sheet found at the end of this section. The design forces and their distribution over the height of the building or structure shall be determined using a linearly elastic analysis model and the procedures listed in the specified building code. Load combinations, including seismic, shall be in accordance with the specified building code.

Hydrodynamic effects of contents shall be considered in the seismic design of vessels and tanks as required by the specified building code.

1S.3 SEISMIC DESIGN.

1S.3.1 Buildings. Buildings shall provide sufficient strength and ductility to resist the specified seismic effects and may use any of the basic structural systems permitted by the specified building code. Usage of structural systems shall be in accordance with the limitations prescribed in the specified building code. The effects of both plan and vertical irregularities shall be considered, as required by the specified building code.

Buildings shall be seismically analyzed using either Equivalent Lateral Forces or Modal Analysis and shall meet all of the design, proportioning, detailing, inspection, and quality assurance provisions of the specified building code.

"W" for buildings shall include the total dead load, the total operating weight of permanent equipment and the effective contents of vessels, and applicable portions of other loads, as required by the specified building code.

1S.3.2 Nonbuilding Structures. Nonbuilding structures include all self-supporting structures, other than buildings, bridges, and dams, that are supported by the earth; that carry gravity loads; and that may be required to resist seismic effects. Design of nonbuilding structures shall provide sufficient strength and ductility, consistent with the requirements for buildings, to resist the specified seismic effects.

Nonbuilding structures shall be seismically analyzed using either Equivalent Lateral Forces or Modal Analysis, and shall meet all of the design, proportioning, detailing, inspection, and quality assurance provisions of the specified building code.

IP7014237

"W" for nonbuilding structures shall include all dead load as defined for buildings, and shall also include all normal operating contents of tanks, vessels, bins, and piping.

Seismic design of reinforced concrete chimneys shall use the Dynamic Response Spectrum Analysis method of ACI 307-98. Seismic design of steel stacks shall also use the Dynamic Response Spectrum Analysis method. The analytical model used in the dynamic analysis of these structures shall be sufficiently refined to represent variations of chimney, stack, and liner masses; variations of stiffness; and the foundation support condition.

1S.3.3 Equipment. Seismic design of mechanical and electrical equipment, attachments, and supports shall consider the dynamic effects of the equipment; its contents; piping attached to its nozzles; and, when appropriate, its supports. Most mechanical and electrical equipment is presumed to be inherently rugged and capable of surviving strong motions and earthquakes provided it is adequately attached to the structure. It is not the intent of this specification to require seismic design of mechanical or electrical assemblies unless it is considered to be essential for life-safety and must remain functional during and after an earthquake.

Equipment mounted on vibration isolation systems shall have a bumper restraint or snubber in each horizontal direction. These seismic restraints shall be designed for twice the seismic force acting on the equipment. Seismic supports shall maintain positive engagement with the equipment.

If the equipment is essential and must remain functional after an earthquake, or if the equipment contains hazardous materials, it may be seismically qualified by design or by testing. Adaptation of a nationally recognized standard for qualification by testing is acceptable, provided that the equipment seismic capacity equals or exceeds the requirements of the specified building code.

1S.3.4 Components. Components are architectural, mechanical, and electrical parts and portions that are attached to and supported by the building but are not part of the building structural system, such as nonbearing walls and partitions, ceilings, storage racks, access floors, tanks, piping, HVAC ductwork, elevators, electrical panels, cable tray, and other nonstructural items. Components shall have the same Seismic Performance Category as the building to which they are attached.

Fire protection components, equipment, and piping shall be functional after an earthquake and shall be assigned the corresponding Importance Factor, IP.

W_p for tanks, bins, and silos shall represent the weight of the tank structure and appurtenances and the operating weight of the contents at maximum rated capacity.

W_p for piping systems shall represent the total distributed operating weight of the piping system, including but not limited to any insulation, fluids, and concentrated loads such as valves, condensate traps, and similar components.

IP7014238

Seismic effects that shall be analyzed in the design of piping systems include the dynamic effects of the piping system, contents, and, when appropriate, supports. The interaction between the piping system and the supporting structures, including other mechanical and electrical equipment, shall also be considered.

In addition to seismic loadings, piping systems shall be designed to withstand dead plus operating loading, occasional (wind or hydrotesting) loading, and thermal loadings. Wind loadings shall not be considered to act concurrently with seismic loadings.

1S.4 DOCUMENTATION. Complete structural support and anchorage details shall be shown on all drawings, including the size of members, details of connections, anchor bolt sizes, etc.

If the specified building code is ASCE 7-95, the following seismic design data shall be indicated on the design drawings:

- Effective Peak Acceleration, A_a.
- Effective Peak Velocity-Related Acceleration, A_v.
- Building Classification Category.
- Seismic Performance Category.
- Soil Profile Type.
- Basic Structural System and Seismic Force Resisting System.
- Response Modification Coefficient, R, and Deflection Amplification Factor, C_d.
- Seismic Analysis Procedure.

If the specified building code is ASCE 7-98 the following seismic design data shall be indicated on the Design Drawings:

- Seismic Use Group.
- Spectral Response Coefficients S_{DS} and S_{DI}.
- Site Class.
- Basic Seismic-Force-Resisting System.
- Design Base Shear.
- Analysis Procedure.

If the specified building code is either BOCA or SBC, the following seismic design data shall be indicated on the design drawings:

- Effective Peak Velocity-Related Acceleration, A_v.
- Effective Peak Acceleration, A_a.
- Seismic Hazard Exposure Group.
- Seismic Performance Category.
- Soil Profile Type.
- Basic Structural System and Seismic Force Resisting System.
- Response Modification Coefficient, R, and Deflection Amplification Factor, C_d.
- Seismic Analysis Procedure.

IP7014239

If the specified building code is UBC, the following seismic design data shall be indicated on the design drawings:

- Seismic Zone.
- Occupancy Category.
- Importance Factor, I.
- Soil Profile Type.
- Base Shear Coefficient.
- Basic Structural System and Seismic Force Resisting System.
- Response Modification Coefficient, R.
- Seismic Analysis Procedure.

If the specified building code is IBC 2000, the following seismic design data shall be indicated on the design drawings.

- Seismic Use Group.
- Spectral Response Coefficients S_{DS} and S_{DI} Site Class.
- Basic Seismic-Force-Resisting System.
- Design Base Shear.
- Analysis Procedure.

Equipment and component drawings shall indicate the total load and/or loads to be transmitted to the structure that must ultimately restrain the components, equipment, or structure. This information shall include the weight, dimensions locating the center of gravity of the component or equipment, or the seismic design forces (magnitude, direction, and location) acting on the supports.

If requested by the Engineer, design calculations shall be submitted for all structures, equipment, or components which are designed in accordance with this section of the specification. If requested by the Engineer, these calculations shall be certified by a professional engineer registered in the appropriate jurisdiction.

IP7014240

Site Meteorological and Seismic Data Sheet

Work shall be designed according to the following building code and site conditions.

Building Code: IBC 2000

Occupancy Category II Substantial Hazard Facilities

Meteorological Data:

Basic Wind Speed, V 90 MPH 3-second gust speed with 50-year mean recurrence interval

Exposure C Flat and Generally Open Terrain

Ground Snow Load, Pg _____ 50-year mean recurrence interval

Site Elevation (mean seal level) _____

Seismic Design Data:

Maximum Considered Earthquake Spectral Response Accelerations

At Short Periods (Ss) 0.43 g

At 1 Second Period (S1) 0.14 g

Seismic Use Group II Substantial Hazard Facilities

Site Class D Stiff soil profile

IP7014241

PART 2 - TECHNICAL REQUIREMENTS

TABLE OF CONTENTS

		Page	
Section 2A - MEDIUM VOLTAGE VARIABLE FREQUENCY DRIVES		2A-1 thru 2A-27	Deleted: 2
2A.1	General	2A-1	
2A.2	Performance	2A-3	
2A.3	Design Calculations	2A-9	Deleted: 8
2A.4	Availability	2A-9	
2A.5	Serviceability/Maintainability	2A-10	
2A.6	Physical Requirements	2A-10	
2A.7	Protective Devices/Diagnostics	2A-13	
2A.8	Programming and Communications	2A-16	
2A.9	Component Requirements	2A-17	
2A.10	Switchgear	2A-21	Deleted: 19
2A.11	Accessories	2A-22	Deleted: 0
2A.12	Testing	2A-22	Deleted: 0
2A.13	Delivery	2A-23	Deleted: 1
2A.14	Training	2A-24	Deleted: 2
2A.15	Startup	2A-24	Deleted: 2
Induced Draft Fan Speed-Torque Curve		2A-25	
Hardwired Control Signal List		2A-26	
Section 2B - VFD ISOLATION (VFDI) TRANSFORMERS		2B-1 thru 2B-11	
2B.1	Input Isolation Transformer	2B-1	
2B.2	Liquid Filled Transformers	2B-1	
2B.3	Dry Type Transformers	2B-2	
2B.4	Mechanical Construction	2B-3	
2B.5	Core and Coils	2B-4	
2B.6	De-Energized Taps	2B-4	
2B.7	Forced Cooling	2B-4	
2B.8	Accessories	2B-5	
2B.9	Termination Compartments	2B-5	
2B.10	Factory Testing	2B-6	
2B.11	Scope of Supply	2B-6	
2B.12	Schedule of Contract Submittals	2B-7	
2B.13	Performance and Design Technical Requirements	2B-7	
2B.14	Required Bid Submittals	2B-9	
2B.15	Technical Data	2B-9	Deleted: 100702

IP7014242

		Page
Section 2C - MEDIUM VOLTAGE INDUCTION MOTORS		2C-1 thru 2C-14
2C.1	General	2C-1
2C.2	Design and Construction	2C-1
2C.3	Scope of Supply	2C-7
2C.4	Scope of Erection/Construction	2C-7
2C.5	Schedule of Contract Submittals	2C-8
2C.6	Performance and Design Requirements	2C-9
2C.7	Additional Requirements	2C-12
2C.8	Required Bid Submittals	2C-13
2C.9	Technical Data	2C-13
DRAWING LIST		1 thru 2

Deleted: . 2B.16 . Unit Adjustment Prices . 2B-11¶

Deleted: 7

Deleted: . 2C.3 . Motor Efficiency Contract Price Adjustments . 2C-9¶

Deleted: 4

Deleted: 9

Deleted: 5

Deleted: 9

Deleted: 6

Deleted: 10

Deleted: 7

Deleted: 10

Deleted: 8

Deleted: 4

Deleted: 9

Deleted: 6

Deleted: 10

Deleted: 6

Deleted: . 2C.11 . Unit Adjustment Prices . 2C-17¶

Deleted: 100702

IP7014243

Section 2A - MEDIUM VOLTAGE VARIABLE FREQUENCY DRIVES

2A.1 GENERAL. This section specifies requirements for variable frequency drives (VFD) for large 3-phase synchronous or squirrel cage induction motors. Both current source load commutated (LCI) and pulse width modulated (PWM) drives are being considered.

To the extent possible, considering this is a retrofit application, the intent is to purchase the suppliers standard equipment with needed available options. Alternate configurations will be considered. If existing synchronous motors are used, two VFDs, complete with all required control components, shall be furnished for each motor. If new motors are provided, one drive per motor is needed. This project requires VFDs for eight ID fan motors.

VFDs shall be manufactured and completely assembled at the Contractor's factory.

Deleted: Supplier

The VFDs shall be housed in the existing control building along with any associated cooling equipment.

Rated capacity	10,000 hp per fan at 1020 RPM and 8200 hp at 954 RPM.
Quantity	VFD systems for two fans per year for the next four years.
Application	ID fan service.
Input voltage	Existing transformers - 6900 to 3876 volts. (see Nameplate)
Nominal frequency	60 Hz.
Short-circuit current at point of common coupling	32 kA at 6900V symmetrical (max.)
VFD equipment enclosure	NEMA 1.
Ambient temperature	0 to 50° C.
Speed range	0 - 1049 rpm (Rated - 954 rpm)
ID fan motor startup/ramp up or ramp down limitations	125 percent full load current maximum or accelerate from 0 RPM to maximum speed in 45 seconds.

Deleted: Continuous operation at ID fan rated horsepower multiplied by service factor.

Deleted: Two

Deleted: 4031

Deleted: 2

Deleted: 100702

IP7014244

2A.1.1 Coordination. The design of each VFD shall be coordinated with the design of the electric supply and driven equipment. The Contractor shall be responsible for furnishing each VFD, for matching the motor and the drive, and for coordinating the collection of data and the design effort to limit harmonics to the specified levels. The Contractor shall be knowledgeable of the requirements specific to the loads that are powered by each VFD. Applicable VFD system options, unique to the load type, shall be provided.

Deleted: Supplier

Deleted: Supplier

2A.1.2 Nameplates. All devices mounted on the face of each drive shall be provided with suitable nameplates. Push buttons, selector switches, and pilot lights shall have the device manufacturer's standard legend plate. All other devices shall have an engraved, phenolic laminated plate, with black lettering on a white background.

2A.1.3 Instruction Manuals. In addition to requirements indicated in Section 1C, Contractor's instruction manuals for each size of VFD shall be furnished and shall include the following:

Deleted: Supplier

Contractor's standard manuals for each size and type of bypass switch, output contactor, transformer, line reactor, and filter.

Deleted: Supplier

Schematics, wiring diagrams, and panel drawings in conformance with construction records.

Troubleshooting procedures, with a cross-reference between symptoms and corrective recommendations.

Connection data to permit removal and installation of recommended smallest field-replaceable parts.

Information on testing of power supplies and printed circuit boards and an explanation of the drive diagnostics.

2A.1.4 Codes and Standards. Provide equipment in full accordance with the latest applicable rules, regulations, and standards of the following:

National Electric Code (NEC).

Underwriters' Laboratories (UL).

American National Standards Institute (ANSI).

National Electrical Manufacturers Association (NEMA).

Deleted: 100702

IP7014245

Institute of Electrical and Electronics Engineers (IEEE).

Federal Communications Commission (FCC).

2A.1.5 Acceptable VFD Systems. The Contractor shall be able to demonstrate at least 10 years of experience in manufacturing VFDs at medium voltage, to demonstrate their capability to provide parts and service support. The proposed VFD system shall have been commercially available for a period of not less than 2 years prior to the date of contract award. The Contractor shall provide at least three sites where similar equipment has been retrofitted.

Deleted: Supplier

Deleted: Supplier

2A.1.6 Experience. It is the intent of this specification to purchase dependable and reliable equipment offering the best performance available from current proven technology. All equipment furnished under this purchase order shall, therefore, have documentation showing proof of actual operation for a minimum of 2 years in similar service. It is also the intent of this specification to procure the Contractor's standard system with any options required to meet this specification. However, any deviations from this specification shall be clearly identified in the Proposal section as exceptions.

Deleted: Supplier

Deleted: on page P-1 of

2A.2 PERFORMANCE. Each VFD system for a fan motor shall be capable of 10,000 hp output at 0.9 per unit voltage on a motor rated volt base. Each VFD shall also be designed and constructed to meet the required performance as specified in the following articles.

Deleted: pair

2A.2.1 Operating Envelope. Each VFD shall meet the following speed and torque requirements.

Each drive shall provide a turning gear speed of 90 rpm.

Each VFD shall be capable of producing a variable ac voltage/frequency output to provide continuous operation over the speed range of 90 to 1100 rpm. Drives shall include a software setable maximum speed limit. Each VFD shall be capable of sustained operation at 1/10 speed to facilitate checkout and maintenance of the driven equipment. As a commissioning and troubleshooting feature, each VFD power circuit shall be capable of operating without a motor connected to a VFD output.

Deleted: normal system 30 to 115 percent

Each VFD shall be capable of operating any standard ac motor of equivalent rating (horsepower and speed) over the specified speed range. Each VFD shall be rated to power the motor continuously at the motor's rated nameplate horsepower multiplied by the service factor.

The controls in each VFD shall provide an adjustable maximum horsepower limit so the drive output can be matched to the existing motor (if being re-used) or to a larger motor (up to 10,000 HP).

Deleted: 100702

IP7014246

If high breakaway/starting torque is required due to the load type, each VFD shall provide 60 percent of full rated torque at standstill. Overload torque shall be 105 percent of full load torque.

2A.2.2 Operating Range. Each VFD system shall be designed to enable fan operation over the entire operating range defined on the speed-torque curve shown in Figure 3-3, located at the end of this section.

Formatted

Formatted

2A.2.3 Input Harmonics. VFDs input harmonics shall comply with the latest edition of IEEE 519 for total harmonic voltage and current distortion calculation and measurement and meet the following distortion limits:

Deleted: 2

Voltage Harmonics: Individual or simultaneous operation of the VFDs shall not add more than 2.5 percent total harmonic voltage distortion while operating from the utility source.

Current Harmonics: Maximum allowable total harmonic current distortion limits for each VFD shall not exceed 5 percent as calculated and measured at the point of common coupling.

Each group of VFD AC to DC converters shall be 24 pulse or provide harmonic filters to provide equivalent harmonic performance.

Compliance shall be verified by the Contractor with field measurements of harmonic distortion differences at the point of common coupling with and without VFDs operating. The point of common coupling (PCC) for all harmonic calculations and field measurements for both voltage and current distortion shall be defined as the main breaker feeding the 6900 volt bus feeding the drive.

Deleted: Supplier

Deleted: two

Deleted: s

Power quality metering shall be installed in each VFD system to continuously monitor and display input and output power quality. The power quality data shall include the following:

Input voltage (average rms value).

Input current (individual phase rms values and average rms value).

Input frequency.

Power factor.

Input (kW, kvar).

Input (kWh).

Deleted: 100702

IP7014247

Input current THD (average of three phases).

Single harmonic calculation in input voltage or current (phase A, B, or C).

Drive efficiency.

Motor voltage (rms).

Motor current (rms).

Motor speed (in rpm or percent).

Motor flux (percent).

Motor torque (percent).

Drive output power (kW).

Output (kWh).

2A.2.4 Motor Compatibility. Characteristics of the existing ID fan motors:

Deleted: 3

Service	ID fan
Machine type	Synchronous
Mounting	Horizontal
Enclosure	NEMA WPII with filters
Insulation	Class F; Thermalastic
Temperature rise	75° C
Standards	NEMA and IEEE
Ambient temperature maximum	45° C
Altitude maximum	4700 ft above mean sea level
Duty	Continuous
Rated output, hp	7,415 hp

Deleted: Quantity

Deleted: 2

Deleted: 100702

IP7014248

Service factor	1.0
Voltage, volts/ frequency/phase	3876 V, 63.6 Hz, 3-phase
Speed, rpm	954
Current, amps	2 windings, shifted 30°, 472 full load amps each when two windings in service. With 1 winding in service, 506 amps.
Locked rotor amps, max.	N/A
Efficiency, min. (full load)	97 percent
Power factor, min. (full load)	0.9 percent
Starting voltage range	VFD
Starting capability	VFD
Running capability	VFD
Bearings	Sleeve
Bearing lubrication	Forced oil, recirculation type
Temperature detectors	One Type E thermocouple per bearing, two 10 ohm copper RTD's per winding
Windings	Copper
Vibration detectors	Mounting only
Terminal box	Two per motor, includes 3 neutral current transformers
Space heater	Yes
Sound level	85 dB at 3 feet in accordance with IEEE 85
Tests	Copies will be made available for review
Incoming cable	Shielded cable in conduit
Current transformers	Yes

Deleted: k

Deleted: One per bearing

Deleted: 100702

IP7014249

Surge capacitors	No
Lightning arresters	No

Deleted: Motor shaft

Deleted: Solid except at exciter end, with HOLSET coupling type WB

If the existing motors are used, each VFD system shall provide an output waveform suitable for the existing motors. Motor life expectancy shall not be compromised in any way by operation with a VFD system. Each VFD shall provide motor overload protection in any operating condition.

The system design shall not have any inherent output harmonic resonance in the operating speed range.

Each VFD output shall be tuned to minimize electrically induced pulsating torque to the output shaft and the mechanical system. The Contractor shall be responsible for damage to the existing motor, coupling, and fan due to torque pulsations. The Contractor shall repair and/or replace items damaged at no cost to IPSC.

Deleted: Supplier

Deleted: Supplier

Deleted: the Owner

Existing input transformers and reactors may be used if adequate for the service. New transformers and reactors shall be provided if existing transformers and reactors are not adequate.

2A.2.5 VFD System Efficiency. Guaranteed minimum total VFD system efficiency (ηsys) shall be a minimum 96 percent at 100 percent speed and 100 percent load and minimum 95 percent at 80 percent speed and 50 percent load. Efficiency evaluation shall include input transformer, harmonic filter and power factor correction (if applicable), VFD converter, and output filter, as indicated below. Auxiliary controls, such as internal VFD control boards, cooling fans, or pumps, shall be included in all loss calculations.

Deleted: 4

The efficiency of a VFD system shall be calculated as follows:

$$\eta sys = \eta VFD \times \eta xfmr \times \eta pfc \times \eta harm \times \eta filter$$

Converter/Inverter (VFD)	ηVFD
Input Transformer	$\eta xfmr$
Power Factor Correction	ηpfc
Input Harmonic Filter	$\eta harm$
Output Filter	$\eta filt$

Total VFD System Efficiency (ηsys) shall be 96.0 percent at full load and 95 percent at 50 percent load.

Note: If the motor power factor is poor (less than 0.85 at rated load), causing a VFD to provide higher than normal reactive current to the machine, the required total VFD system efficiency requirement will be reduced by 0.5 percent.

Deleted: 100702

IP7014250

The transformer efficiency shall be measured at factory test. The VFD efficiency shall be calculated by the segregated loss method and certified documentation shall be provided as part of the factory test. The VFD system total efficiency shall be verified during the startup (refer to 2A.2.2). A penalty ($1,275 per kW) shall be assessed if efficiency is not achieved and shall be deducted from the purchase order price.

System Input Power Factor

Each VFD system shall maintain a 95 percent minimum true power factor from 30 percent to 100 percent of rated speed. The Contractor shall supply a power factor correction system, if required, to meet this requirement. The power factor correction unit shall include a separate input isolating contactor with fuses, power factor correction grade capacitors (voltage class shall be consistent with each VFD system input voltage), and series harmonic decoupling reactors, all integrated into the VFD system and mounted within each VFD enclosure. A penalty ($50 per kVAR) shall be assessed if power factor is not achieved and shall be deducted from the purchase order price.

Deleted: Supplier

2A.2.6 Speed Control System. The speed control system shall be designed to be compatible with the IPSC-furnished plant control system. The speed control system, shall also be in accordance with the paragraphs which follow.

Accelerating and decelerating torque shall be independently field adjustable. Accelerating and decelerating torque shall, within the limits of power equipment, be independent of isolation transformer input voltage. The Contractor's proposal shall include a description of accelerating and decelerating torque programming capabilities and other pertinent capabilities and limitations. Acceleration and deceleration shall be smooth.

The speed control system shall initiate regenerative braking (deceleration) when given a maintained contact closure from IPSC's plant control system. The Contractor's proposal shall include a regenerative braking speed torque curve based on a 6,900 volt bus operating voltage. Regenerative braking torque shall be field adjustable.

The speed control system shall provide linear speed control corresponding to IPSC-furnished 4-20 mA (linear from 0-100 percent) speed control signal. Dynamic speed control range shall be 0 to 100 percent. Steady-state speed control range shall be 10 to 100 percent. The speed control shall be capable of setting the motor speed to an accuracy of plus or minus one percent of the test block speed of the fan.

A change in IPSC-furnished speed control signal shall not initiate a drive system acceleration or deceleration torque command unless the IPSC-furnished speed control signal changes by a field adjustable amount. The range of this field adjustable amount shall be from plus or minus 0.5 percent to plus or minus 5 percent of full speed.

Deleted: 100702

IP7014251

The speed control system shall be inherently stable when the IPSC-furnished speed control signal is in a steady-state condition. The speed control system shall automatically adjust rectifier SCR firing to maintain motor speed to compensate for motor load changes and 6,900 volt bus voltage changes. Changes in motor load and 6,900 volt bus voltage shall not initiate acceleration or deceleration torques. Steady-state speed control shall be within plus or minus one rpm without encoder or tachometer feedback.

It is expected that during starting of other large motors, the 6,900 volt bus voltage will drop momentarily to as low as 5,400 volts. This condition shall not affect motor speed as long as sufficient current, up to current limit, is available in relation to supply voltage to maintain motor speed. If insufficient current is available to maintain drive speed, the current applied shall be the current limit. The speed control system and all components of the ID Fan Variable Frequency Drive shall be capable of sustaining this condition for a minimum of 30 seconds after which coasting of the motor will be permitted. Normal control shall be initiated as soon as the 6,900 volt bus voltage reaches 6,600 volts.

If the 6,900 volt bus voltage drops below 5,400 volts, motor coasting shall be initiated. Normal control shall be initiated as soon as the 6,900 volt bus voltage reaches 6,600 volts unless voltage has remained below 5,400 volts for 30 seconds or more in which case automatic shutdown of the ID Fan Variable Frequency Drive shall be initiated.

Maximum line current at the primary terminals of the power transformer shall not exceed 125 percent full load current during either acceleration or regenerative braking.

The electric adjustable speed drive systems shall be suitable for continuous operation at turning gear speed for equipment cool-down. Proposed information shall describe operation at turning gear speed.

2A.2.7 Sound Level. Maximum allowable audible noise from a VFD system shall be 75 dB(A) at a distance of 1 meter (3.3 feet) at any speed or load condition. VFD systems with audible noise in excess of this limit shall be provided with sufficient noise abatement treatment to reduce the sound pressure level below 75 dB(A).

Formatted

Deleted: 2A.2.5 Speed Regulation. VFD speed regulation shall be ±0.5 percent without encoder or tachometer feedback.¶
¶

Deleted: 6

2A.3 DESIGN CALCULATIONS.

2A.3.1 Torsional Analysis. The price of a torsional analysis shall be included in the base price. A deduct shall be included in case IPSC chooses not to have a torsional analysis. The total rotating system shall be analyzed to determine its natural resonant frequencies. Stresses shall be calculated for elements of the rotating system, utilizing torsional excitation data from the drive and driven system, taking into account potential fault conditions and appropriate amplification and damping factors of the rotating system. A written report on the analysis, which details the procedures used and the assumptions that were considered, shall be provided. The results of the analysis shall be presented in both detailed and summary form. Specific data presented shall include the following:

Deleted: If a torsional analysis is required, t

Deleted: the

Deleted: 100702

IP7014252

A diagram of the frequencies of the torque pulsations and the mechanical resonant frequencies showing their coincident points.

A plot of total shaft stress versus operating speed for the most highly stressed areas of the rotating system.

A diagram of the rotating system model and mode shapes for resonance(s) of interest.

Tables summarizing total calculated stresses for each element of the rotating system at operating speeds where interference(s) exist between torsional excitations and torsional resonance.

Details of the rotating system used in the analysis, including the specified or a recommended alternate coupling.

Recommendations for any modifications to the proposed system, if indicated by the analysis to be advisable, the cost of which shall be borne by the Contractor.

Deleted: Supplier

2A.3.2 Harmonic Study. A preliminary harmonic analysis shall be performed. A power system short-circuit ratio of 20 shall be assumed, with all VFDs operating at maximum speed and maximum load. Short-circuit current (ISC) utilized for harmonic analysis calculations is defined as:

I_{SC} = 10 * (sum of total full load amps of all VFD systems)

The Contractor shall submit the harmonic analysis at the time of bid, which includes all voltage and current harmonics up to the 49th.

Deleted: Supplier

2A.4 AVAILABILITY.

2A.4.1 Firing Signals. All internal firing signals, and other communications (which link operational controls with power components such as status and diagnostic signals) shall meet noise immunity and safety requirements as defined by applicable IEEE Standards.

2A.4.2 Failed Switch Bypass/Ride-Through Capability. The failure of any power switching device (SCR, GTO, diode, IGBT, IGCT, etc.) or switching device control shall not result in a process trip and shall allow for continued operation of each VFD system. In the event of a device or device control failure, a VFD shall annunciate and identify the specific location of the failed device and allow for continued operation until such time as repairs can be scheduled.

Deleted: 100702

IP7014253

2A.4.3 Power Interrupt Ride-Through. Each VFD system shall be capable of continuous operation in the event of a power loss of 50 cycles or less.

Each VFD system shall be capable of automatically restarting in the event of a loss of power. Each VFD system shall provide IPSC with the choice of automatically restarting or not. The choice will be selected by the operator and retained by the control system until changed by the operator. IPSC shall be able to selectively apply this feature and have the ability to set the allowable restart time applicable to some (but not necessarily all) conditions as determined by IPSC to be appropriate for the specific application.

Deleted: momentary

Deleted: the Purchaser

Deleted: The Purchaser

Deleted: the Purchaser

2A.4.4 Power Sag Ride-Through. Each VFD system shall be capable of continuous operation with a thirty (30) percent voltage sag on the input power line.

2A.4.5 "Catch-A-Spinning-Load" Capability. Each VFD system shall be able to catch and take control of a spinning load if started while rotating equipment is already spinning. Appropriate safeguards shall be included in this operation to prevent damaging torque(s), voltages, or currents from impacting any of the equipment. IPSC shall have the option of employing this feature or disabling it.

Deleted: The Purchaser

2A.4.6 Auto Restart Capability. Each VFD system shall be capable of automatically restarting in the event of an undervoltage trip. Each VFD system shall provide IPSC with the choice of automatically restarting or not. IPSC shall be able to selectively apply this feature to some (but not necessarily all) conditions as determined by IPSC to be appropriate for the specific application. Logic shall be provided to inhibit the boiler trip signal when appropriate.

Deleted: the Purchaser

Deleted: The Purchaser

Deleted: the Purchaser

2A.4.7 Ground Fault Withstand. In the event of a ground fault, a VFD shall be capable of annunciating the ground fault condition, safely operating and, by Purchaser selection, either trip or continue operation. As a result of a ground fault trip, a VFD shall be capable of being reset and begin operating normally again after the ground fault condition has been corrected. There shall be no risk of fire or electric shock as a result of the ground fault.

2A.5 SERVICEABILITY/MAINTAINABILITY.

2A.5.1 Front Access. Each VFD system shall be designed for front access only. Contractor shall state in his proposal if rear or side access is required. An explanation of reason for any required rear or side access shall be given.

Deleted: Supplier

2A.5.2 Power Component Accessibility. All power components in the converter sections shall be mounted on a swing frame or rack-out for ease of maintenance and to minimize repair downtime. Alternate access options shall be described in the Proposal for the Engineer's review and evaluation.

Deleted: 100702

IP7014254

2A.5.3 Voltage Isolation. All low voltage components, circuits, and wiring shall be separated with physical barriers from any sources of medium voltage.

2A.5.4 Remote Diagnostics. Each VFD system shall be provided with the capability for remote diagnostics via modem communication or Ethernet link.

2A.5.5 Marking/Labeling. Sleeve type wire marker tags or other acceptable means of permanent identification shall be applied to power and control wiring. Individual nameplates shall be provided for all major components of a VFD system.

2A.5.6 Mean Time to Repair (MTTR). The VFD design shall demonstrate an actual mean time to repair of less than 15 minutes in the event of any power switching component failure.

2A.6 PHYSICAL REQUIREMENTS.

2A.6.1 Environmental Requirements. Each VFD system shall be capable of continuous operation in an average ambient temperature between 0°C and 50°C at an elevation up to 4,700 feet above mean sea level without derating. Each VFD system shall also be simultaneously suitable for continuous operation in a maximum humidity between 0 and 95 percent noncondensing.

2A.6.2 Heat Dissipation/Cooling System. Each VFD system shall be air-cooled unless air-cooling is unavailable or impractical, in which case liquid cooling shall be provided.

2A.6.3 Air-Cooling Requirements. Air-cooled VFDs shall be provided with fan redundancy and automatic switchover in the event of a fan failure for enhanced reliability. If a fan fails, the system shall automatically switch to the alternate fan and generate an alarm to notify operator of initial fan system failure. The drive shall have ability to detect failed operation of the cooling system (using temperature detectors as the only protection against loss of fan system is not acceptable). During normal operation, the system shall periodically cycle between the two fan systems to "exercise" them and prevent drying out of bearings, seals, etc., and to ensure availability of all systems. The Contractor shall provide heat dissipation data necessary to design all auxiliary HVAC systems.

Deleted: Supplier

2A.6.4 Liquid-Cooling Requirements. Liquid-cooled VFDs shall be provided with 100 percent redundant pumps and automatic switchover in the event of a pump failure. Redundant systems shall be provided such that a cooling system can be taken out of service for maintenance or repair without taking a drive out of service.

The system shall be arranged for either an internal liquid-to-liquid heat exchanger, mounted inside each VFD cabinet, or an external liquid-to-air heat exchanger for mounting on a deck supplied by the Contractor.

Deleted: A resin-encapsulated dry type transformer shall be supplied.¶
¶

Deleted: Supplier

Deleted: 100702

IP7014255

A minimum of 90 percent of the heat generated (losses) by the drive system shall be removed through the liquid cooling system. The Contractor shall provide heat dissipation data necessary to design all auxiliary cooling systems and utilities. The system shall be designed so that a failed pump can be safely isolated and repaired while a VFD system remains in service. Cooling pump motors shall have sealed bearings for long, maintenance free life.

Deleted: Supplier

VFD liquid-to-liquid heat exchangers requiring a separate source of cooling water supplied by IPSC are not acceptable. If one is required, the requirement shall be explicitly indicated in the Proposal as an exception. Unless otherwise specified, the design shall be based on a supply of clean (maximum fouling factor of 0.002) cooling water at a maximum temperature of 35 ºC and a maximum pressure of 125 psi.

Deleted: the Purchaser

Deleted: (page P-1)

Liquid-to-air heat exchangers shall be furnished and installed outdoors on a deck attached to the control building by the Contractor. The Contractor shall furnish piping and power and control wiring between each VFD and the heat exchanger. The cooling system shall be filled following installation of the drive. Coolant liquid shall be furnished by the Contractor.

Deleted: Supplier

Deleted: Supplier

Deleted: Supplier

The cooling system shall consist of two circuits. One internal circuit where deionized water is used and one exterior circuit where propylene glycol is used to provide an ambient service temperature range of -40°C to +40°C. Ethylene glycol is NOT acceptable due to environmental and hazardous material concerns.

Quick disconnect fittings shall be provided at each connection between the header and the supply hose.

Dissimilar metals shall be completely avoided in cooling liquid piping. Plastic piping is not acceptable. The use of threaded connections shall be minimized. All connections and fittings shall be designed based upon the system cooling fluid, the required flow, and shall be tested at two times the normal system design operating temperature and pressure.

Each VFD cooling system shall maintain system coolant temperature within a safe minimum and safe maximum temperature to avoid thermal shock and/or condensation.

2A.6.5 Enclosure. All VFD system components, including transformer (for PWM drives), shall be mounted and wired by the Contractor in a grounded enclosure meeting the following requirements without exception. Separately mounted transformers shall be provided for LCI drives.

Deleted: Supplier

Input filters, transformer, power conversion, output filters and auxiliary equipment enclosure sections shall be NEMA 1 design. Air-cooled units shall be NEMA 1 Ventilated, with gasketed doors. Liquid-cooled units shall be NEMA 1 Nonventilated. Air-cooled units shall have cleanable filter media covering all air inlets. Inlet air filters shall be 100 percent washable, with a progressively structured, corrosion free media. Filters shall be front replaceable (for cleaning) while each VFD is in operation without exposing maintenance

Deleted: 100702

IP7014256

personnel to any of the power components. Unless specified otherwise, cabinet color shall be ANSI 61 Gray. Paint procedures and materials shall be manufacturer's system designed and proven for resistance to chemical attack in industrial powerhouse environments.

Microprocessor and control logic boards and their power supplies shall be housed in a sealed, nonventilated NEMA 12 section, safely accessible without exposure to high voltages and without drive shutdown. All low voltage wiring shall be fully isolated from medium voltage compartments by metal barriers.

Cabinets and doors shall be fabricated using heavy gauge steel (12 gauge minimum) for sturdy construction and dimensional integrity to assure long-term fit and function. All doors shall be gasketed to provide environmental protection and secure fits.

Enclosures shall be designed to avoid harmonic and inductive heating effects. The enclosure shall be designed to shield any outside equipment from interference, enclosing and shielding the complete component to eliminate any radio frequency interference in compliance with FCC Part 18 requirements.

2A.6.6 Installation/Cabling. IPSC will set the VFD equipment in place and install interconnecting wiring. The Contractor's proposal shall include a detailed description of installation and wiring.

Deleted: The Purchaser

Deleted: Supplier

2A.6.7 Space Limitations - Footprint. The Contractor shall provide a proposed layout of equipment with the proposal. Floor plans of the existing control building are included.

Deleted: Supplier

2A.6.8 Interlocks. Mechanical key interlocks shall be provided on all doors. Interlocking shall be fully coordinated to prevent access to all high voltage compartments, including transformer, filters, or any switchgear that is part of the supply, when line power is applied to each VFD system. Interlocks shall be mechanical to provide positive lockout prevention and safety. Electrical interlock switches alone are not acceptable due to the possibility of inadvertent shutdown and the ease with which such switches could be bypassed.

2A.6.9 Control Power and UPS System. The Contractor's proposal shall include a detailed description of control and accessory power requirements for his proposed system.

Deleted: Supplier

Formatted

2A.6.10 Space Heaters. The power/control assembly including individual compartments shall be provided with space heaters to prevent condensation of moisture within the enclosures. The heaters shall be spaced away and thermally insulated from any painted surfaces.

Space heater capacity shall be as required to maintain the compartment internal temperature above the dew point.

Deleted: 100702

IP7014257

Voltage normally applied to the space heaters will be 120 volts ac. Space heater voltage rating shall be 120 volts ac.

IPSC will provide a 2 wire, 120 volt, 60 hertz space heater supply feeder to each assembly. The Contractor shall provide all required internal wiring and suitable branch circuit protection for each space heater circuit.

All space heaters shall be controlled by an adjustable thermostat, factory set to close at 85° F (ON) and to open at 95° F (OFF).

Formatted

2A.7 PROTECTIVE DEVICES/DIAGNOSTICS.

2A.7.1 Power Component Protection. Each VFD system shall include intermediate class surge arresters to protect the input transformer and VFD against voltage surges.

Each VFD system shall include protection to the converter rectifier devices to protect the secondary of the transformer from any potentially harmful fault currents. Arrangements that involve coordinated protection with an input circuit breaker are not as desirable and, if proposed, the Contractor shall furnish all coordinating elements, including the circuit breaker itself, and shall furnish a detailed description of the protection scheme with the proposal.

Deleted: Supplier

2A.7.2 Protective Features and Circuits. The controller shall include the following alarms and protective features:

Static instantaneous overcurrent and overvoltage trip.

Undervoltage and power loss protection.

Overtemperature protection.

Electronic motor inverse time overload protection.

Responsive action to motor winding temperature detectors. An RTD analog input from the motors to each VFD control system is required.

When power is restored after a complete power outage, each VFD shall be capable of catching the motor while it is still spinning and restoring it to proper operating speed without the use of an encoder.

Motor overspeed.

Deleted: 100702

IP7014258

Each VFD system shall be protected from damage due to the following, without requiring an output contactor:

Single-phase fault or 3-phase short circuit on VFD system output terminals.

Failure to commutate inverter thyristor due to severe overload or other conditions.

Loss of input power due to opening of VFD input disconnect device or utility power failure during VFD operation.

Loss of one phase of input power.

Motor regeneration due to backspin or loss of VFD input power.

Each VFD shall be able to withstand the following fault conditions without damage to the power circuit components:

Failure to connect a motor to a VFD output.

VFD output open circuit that may occur during operation.

Each VFD shall include a Purchaser selectable automatic restart feature. When enabled, a VFD shall automatically attempt to restart after a trip condition resulting from overcurrent, undervoltage, or over voltage. Logic shall be provided to inhibit unit trip when appropriate.

2A.7.3 Data Displays. A door mounted LCD display shall be furnished, capable of displaying VFD operational status and drive parameters. The digital display shall present all diagnostic message and parameter values in plain language engineering units when accessed, without the use of codes.

As a minimum, the following door mounted digital indications shall be supplied:

Speed demand in percent.

Actual speed.

Input current in amperes.

Output current in amperes.

Output frequency in hertz.

Input voltage.

Deleted: 100702

IP7014259

Output voltage.

Total 3-phase kW output.

Kilowatt-hour meter.

Elapsed time running meter.

2A.7.4 Diagnostics and Fault Recording. The control logic section shall be fully digital and not require analog adjustment pots or fixed selector resistors.

Fault log data storage memory shall be stored in nonvolatile memory or be supported by a UPS sized to provide a minimum 48 hour data retention.

Each VFD shall include a comprehensive microprocessor based digital diagnostic system, which monitors its own control functions and displays faults and operating conditions.

A "FAULT LOG" shall record, store, display, and print, upon demand, the following for the 50 most recent events:

VFD mode (auto/manual).

Date and time of day.

Type of fault.

Reset mode (auto/manual).

A "HISTORIC LOG" shall record, store, display, and print, upon demand, the following control variables at an adjustable time interval for the 50 intervals immediately preceding a fault trip and 100 intervals following such trip:

VFD mode (manual/auto/inhibited/tripped/etc.).

Speed demand.

VFD output frequency.

Demand (output) amps.

Feedback (motor) amps.

VFD output volts.

Deleted: 100702

IP7014260

Type of fault.

Drive inhibit (on/off).

The fault log record shall be accessible via a fiber-optic link as well as line by line on the keypad display.

One laptop PC, printer, and a "Windows based" graphical tool suite shall be provided with the VFDs. This graphical PC tool shall be able to plot and display up to eight different VFD parameters and have the ability to freeze plotting and print hard copy versions of the plots. Capability to display at least eight different VFD system parameters is required, and all parameters displayed on the PC tool shall be synchronized with the standard keypad display.

2A.8 PROGRAMMING AND COMMUNICATIONS.

2A.8.1 User Input/Keypad. The door of each power unit shall include manual speed device, a mode selector marked "Manual/Automatic," a "POWER ON" light, a VFD "FAULT" light, a VFD "RUNNING" light, start push button, stop push button, and reset push button.

A door mounted keypad with integral digital LCD display shall be furnished, capable of controlling a VFD and setting drive parameters. The display shall present all diagnostic message and parameter values in standard engineering units when accessed, without the use of codes. The keypad shall allow the operator to enter exact numerical settings in standard engineering units. A plain language user menu (rather than codes) shall be provided in software as a guide to parameter setting.

Drive parameters shall be factory set in nonvolatile EEPROM registers and resettable in the field through the keypad. Multiple levels of password security shall be available to protect drive parameters from unauthorized personnel. The EEPROM stored drive variables shall be able to be transferred for programming of new or spare boards. System shall allow programming changes while in service.

The keypad module shall contain a "self-test" software program that can be activated to verify proper keypad operations.

Each VFD system shall have the user selectable option of programming up to three speed avoidance bands. This gives the user the ability to block out and prevent operation at any undesirable speed, such as one that may be coincident with a mechanical resonance condition.

2A.8.2 Hard-Wired Communication. The Contractor shall provide five additional analog, 10 additional digital inputs, and 10 additional digital outputs for connection to IPSC's plant control system for each VFD drive. All trip and start commands from IPSC's plant control

Deleted: Supplier

Deleted: the Purchaser

Deleted: Honeywell DCS

Deleted: 100702

Deleted: the Purchaser

Deleted: DCS

IP7014261

system shall be hard-wired. A listing of the existing hardwired control signals is included at the end of this section. A copy of the existing schematics will be provided to the Contractor after the contract is awarded.

Contractor shall provide drive to drive communications and coordination of drives associated with each boiler. Certain parameters of this feature may be controlled by the operator.

2A.8.3 Serial Communication/Protocols/Modem or Cable. VFD shall be capable of direct communication to an IBM or compatible computer via fiber-optic link for setup of parameters, fault diagnostics, trending, and diagnostic log downloading. VFD parameters, fault log, and diagnostic log shall be downloadable for hard copy printout via the fiber-optic link and the standard serial printer.

Each VFD shall be provided with single port digital communication capability to allow status communication with the plant control system. Modbus communication protocol shall be provided.

Deleted: Honeywell

An Ethernet communications link shall be provided for future use.

2A.9 COMPONENT REQUIREMENTS.

2A.9.1 Printed Circuit Boards. All printed circuit boards shall be new. They shall be coated for moisture and chemical resistance, in addition to any dielectric coating properties. All boards shall be tested in accordance with Article 2A.12.

Deleted: 3

2A.9.2 Power Bus and Wiring. Main power bus shall be high conductivity copper and plated for chemical and corrosion resistance and low losses. Bus shall be appropriately sized for the VFD continuous current rating and braced to withstand the mechanical forces caused by a momentary short-circuit current of 32 kA at 6900V. All connections shall be bolted or continuously welded.

Deleted: 40

Main grounding of each VFD system shall have a common loop consisting of 4/0 minimum copper cable placed in the enclosure base. This cable shall loop the perimeter of the base and shall be attached to stainless steel grounding pads welded to the base on two locations, one at each end of the enclosure.

All control wiring shall be physically separated from the power wiring. Low and high voltage cables shall be physically isolated from each other. Each VFD system shall be pre-wired within the enclosure. Spade type connectors are not acceptable. No soldering shall be used in connection with any wiring. Wiring shall be adequately supported to avoid tension on conductors and terminations. All wiring shall be run in surface mounted conduit or wire-ways. Any section of wiring outside of conduit or wireway shall be securely tied with cable ties at intervals not exceeding 6 inches. No cables shall be tied off to or in any way

Deleted: 100702

IP7014262

supported from power buses. Wherever wiring passes metal edges or through holes, suitable guards or grommets shall be provided to prevent cutting or chafing of the insulation.

All terminal blocks shall have at least 20 percent spares. No more than two wires shall be terminated on one terminal.

All wiring shall be tagged with permanent labels at each termination, junction box, and device. Labels shall correspond to the schematic and wiring diagrams.

2A.9.3 Ground Connection. Corrosion resistant grounding pads shall be provided in each power cubicle. A copper ground bus shall be provided for grounding of control circuits.

2A.9.4 Input Isolation Transformer. Each VFD system shall use a drive isolation transformer to provide common mode voltage protection and phase shifting. The existing input transformers may be used if adequate. If new transformers are proposed, they shall be as specified in Section 2B.

2A.9.5 DC Link Inductors. Dc link inductors if required shall be air core to prevent saturation. Separate inductors (split dual winding type) shall be provided in the positive and negative legs of the dc link to minimize stray magnetic fields. Maximum temperature rise shall not exceed 115° C with minimum 220° C insulation and overtemperature protection. To minimize cabling costs, the inductors shall be integral to each VFD system lineup. If it is not possible to integrate the inductors into each VFD system enclosure, the cabling and connecting shall be entirely furnished by the Contractor, and approved by the Engineer. Inductors shall meet the requirements of ANSI C57.16 and shall be designed to prevent saturation under maximum fault current conditions.

Deleted: Supplier

2A.9.6 DC Link Capacitors. Capacitors used in the converter dc link shall be integral to each VFD system lineup to minimize cabling costs.

Capacitors used in the converter dc link shall contain discharge resistors and shall be capable of reducing the residual charge to 50 volts or less within 5 minutes after the capacitor is disconnected from the source of supply.

2A.9.7 Input Harmonic Filters. If after meeting the requirements of Article 2A.2, harmonic filters are still required to meet power factor requirements, stricter local requirements, or telephone interference factor restrictions, the Contractor shall provide the filter, upstream filter isolation, protection, and protection coordination. As harmonic filters are power system dependent, the Contractor is responsible for maintaining and providing any required upgrades required during the warranty period at no cost to IPSC. To minimize cabling costs, the harmonic filter components shall be integral to each VFD system lineup, but isolated from other components, such that they can be disconnected from the power source and accessed for maintenance/repair while each VFD is in operation. If it is not possible to integrate the filters into each VFD system enclosure, the cabling and connecting shall be entirely furnished

Deleted: Supplier

Deleted: Supplier

Deleted: the Purchaser

Deleted: 100702

IP7014263

by the Contractor, and approved by the Engineer. Harmonic filters shall be located on the primary side of the input isolation transformer and shall be switchable with the VFD, to prevent their remaining on the power line in the event of a VFD trip, which could create a damaging leading power factor condition. The complete filter shall have independent protection for overcurrent, phase differential, and ground fault.

Deleted: Supplier

Any inductors used shall be iron core or air core with a maximum temperature rise of 115° C with minimum 220° C insulation and overtemperature protection. Reactors shall be designed to prevent saturation under maximum fault current conditions. Reactors shall meet the requirements of ANSI C57.16.

Capacitors used in the harmonic filter banks shall meet the requirements of IEEE 18 and IEEE 1036 for shunt power capacitors. Capacitors used in any harmonic filter banks shall be provided with a method of shorting the phases to ground once power has been removed and the capacitors have been discharged to a safe voltage level. Where oil-filled capacitors are required and the total volume of oil exceeds 500 gallons, the oil sump and containment provisions shall be supplied as part of the VFD system.

2A.9.8 Output Filters. If an output filter is required to meet the output harmonics requirements of this specification, or to meet any special requirements of the application, they shall be fully incorporated into each VFD system design. To minimize cabling costs, the output filter components shall be integral to each VFD system lineup. If it is not possible to integrate the output filters into each VFD system enclosure, the cabling and connecting shall be entirely furnished by the Contractor, and approved by the Engineer.

Deleted: Supplier

Any inductors used shall be iron core with a maximum temperature rise of 115° C with minimum 220° C insulation and overtemperature protection. Reactors shall be designed to prevent saturation under maximum fault current conditions. Reactors shall meet the requirements of IEEE C57.16.

Capacitors used in the harmonic filter banks shall meet the requirements of IEEE 18 and IEEE 1036 for shunt power capacitors. Capacitors used in any harmonic filter banks shall be provided with a method of shorting the phases to ground once power has been removed and the capacitors have been discharged to a safe voltage level.

Where potential exists for self-excitation between the output filter and the motor system, a fully (voltage and current) rated output contactor shall be provided by the Contractor as part of each VFD system delivery.

Deleted: Supplier

2A.9.9 Input Power Terminations. Input and output power connections shall be made to isolated, supported, and plated bus strap connections. Sufficient space shall be provided for termination connections from the top or the bottom of each VFD cubicle. Space provisions shall be provided for application of standard stress cones, and provisions shall be provided for grounding of shielded cabling.

Deleted: 100702

IP7014264

2A.10 SWITCHGEAR. Each VFD input section shall contain a suitably rated load break disconnect switch with fuses (anti-single phasing protection shall be provided) interlocked with the door. This switch shall isolate a VFD for maintenance and service while the fuses provide input circuit protection for the entire system. For safety, blade position shall be visible through the door. The disconnect switch shall be integrated into each VFD system so as to appear as a single integrated package. This switch shall consist of dead front, completely metal enclosed vertical sections containing load interrupter switches and fuses. The door shall be interlocked with the switch so that (a) the switch must be opened before the door can be opened and (b) the door must be closed before the switch can be closed. There shall be a provision for padlocking the switch in either the open or closed position. The switch shall have permanent "open" and "closed" switch position indicators. The switch shall have a quick-make, quick-break mechanism providing full load current interrupting capability and shall have fuses that are permanently calibrated to provide short-circuit detecting and interrupting capabilities. The speed of opening and closing the switch shall be independent of the operator. Switch blades shall be designed such that full clearance is maintained until the switch mechanism goes over toggle. There shall not be any possibility of the blades arriving at an intermediate position. Insulating barriers shall separate each phase and between the outer phases and the enclosure. All switches shall comply with ANSI C37.20.3, ANSI C37.22, ANSI C37.57, ANSI C37.58, NEMA SG5, and UL Standards.

2A.11 ACCESSORIES. A test tool for testing the solid state power devices shall be provided.

2A.12 TESTING.

2A.12.1 Subassembly Tests. Printed circuit boards shall be visually inspected and functionally tested. All boards shall be tested individually prior to assembly to minimize any impact faulty boards may have on delivery schedules and system reliability. Each board shall be load and temperature cycled from no load to full load and from ambient to +60° C during a 48 hour burn-in test. Any boards that exhibit drift during the test shall be replaced with boards that have successfully completed the burn-in without drift.

Power assemblies shall be visually inspected and then HIPOT tested. Complete diagnostics and logic shall be tested. The complete power conversion circuit shall be thoroughly tested at 100 percent load for a minimum of 1 hour and then tested for 1 minute at momentary overload rating, to reduce potential problems in advance of final system testing.

The following is a summary of factory tests:

Component tests.

Burn in test.

Deleted: 100702

IP7014265

Visual inspection.

Wiring and equipment test.

Insulation test.

Power circuit test.

Control and auxiliary supply circuit test.

Hardware protection trip test.

Load test.

2A.12.2 System Level Tests. The system shall be given preliminary checks, including verification of electrical connections and ground connections. Power and control wiring shall be resistance checked point-to-point. EPROM and EEPROM shall be checked for correct revision level. Visual check shall be performed to verify: degree of protection for cabinets, input isolation is lockable in the off-position, marking of terminals and wiring, space availability for cable termination, accessibility of components, and ease of maintenance and repair. Each VFD system shall be fully checked against the approved drawings for compliance and correct physical dimensions.

Power circuit and all control circuits shall be HIPOT tested to ground.

All control voltage levels are to be checked and verified.

A no load test shall be performed on the system. The drive shall be connected to an unloaded motor and feed back signals shall be verified. Output voltage shall be calibrated. All logic and interlocks, including customer logic and instrumentation, shall be tested.

The drive shall be given a full power test at rated current and rated voltage (simultaneously) for a minimum of 4 hours (or until all system temperatures stabilize, whichever is longer) on a dynamometer or reactor load. This test shall be performed as an integrated system including all supplied input switchgear, input transformer, input filter (if supplied), power section, and output filter (if supplied). The Contractor shall perform the factory system test to verify that total system efficiency, power factor, and harmonic distortion limits are met as specified. Total system efficiency shall be measured using watt meters or Multilin PQM or approved equivalent meters on both the input and the output of the complete system. System shall not be shipped unless performance criteria are met. Certified test data of all tests conducted shall be provided with final documentation.

Deleted: Supplier

The testing may be witnessed by the Engineer and/or Purchaser. A projected test schedule and a copy of proposed test procedures shall be provided at least 1 month in advance of test

Deleted: 100702

IP7014266

date. The Engineer shall be given at least 1 week's notice or confirmation of actual test date(s).

2A.13 DELIVERY. VFD system shall be delivered to the site preassembled and wired with all specified interconnecting wiring and cable. Cabling for connection across shipping splits shall be neatly coiled and identified. Exposed sections of equipment shall be fully protected from damage during shipment. All necessary hardware for reconnecting shipping splits shall be provided.

Setting equipment in place, aligning, and anchoring will be done by others. The Contractor shall supervise all system interconnections across shipping splits at the site.

Deleted: Supplier

Complete instructions for handling and storage shall be provided prior to delivery of the equipment. All equipment shall have adequate provisions for handling by overhead crane or forklift truck.

2A.14 TRAINING. The Contractor shall provide an onsite training school for Purchaser's operations, maintenance, and service personnel (15 total). The training school shall include classroom discussion on the theory of operation of the equipment, as well as maintenance and service methods for the purchased equipment. Topics covered shall include safety, hardware layout and functions, power and control wiring, diagnostic indicators, keypad/display interface, software mapping, programming, setup, configuration, control loop tuning, operational indicators, faults, diagnostic tools, troubleshooting, and preventive maintenance. Hands-on training shall be provided on equipment of the same design as that provided. Documentation shall be provided, and shall include actual manuals for the equipment and drawings and schematics of equipment supplied for this project.

Deleted: Supplier

2A.15 STARTUP. The Contractor shall provide the field services of a factory technician as necessary to supervise/inspect installation, test, and start up all equipment provided as part of the fixed price proposal. The firm price shall include all travel and living expenses in addition to the startup engineer's time required to complete supervision of the installation, testing and startup as indicated in Section 1A. All equipment required for testing, startup, and performance verification shall be provided by the startup technician. The Contractor shall furnish all required startup spare parts.

Deleted: Supplier

Deleted: Supplier

Verification of VFD input harmonic voltage and current distortion limits specified shall be verified at rated speed and rated power as part of final startup and acceptance. A recording type Fluke, Multilin PQM, BMI, or equivalent harmonic analyzer displaying individual and total harmonic currents and voltages shall be utilized.

Deleted: 100702

IP7014267

SYSTEM DESCRIPTION	FILE NO. 9255.93.1405
INDUCED DRAFT (CCE)	IPP 121284-1

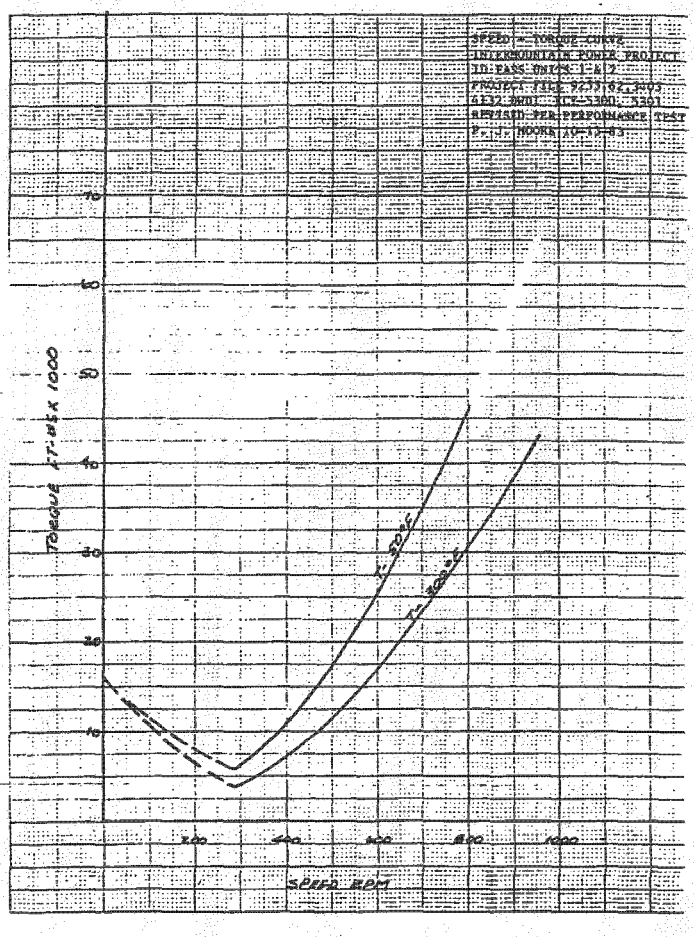

INDUCED DRAFT FAN
SPEED-TORQUE CURVE
FIGURE 3-3

Deleted: 100702

EXISTING HARDWIRED CONTROL SIGNALS LIST

Formatted

DEVICE	TYPE	SWITCH	DESCRIPTION	POWER SOURCE		
CONTACTOR	DI		INDUCED DRAFT FAN CONTACTOR 1A2 CLOSED	ID FAN 1A REMOTE I/O POWER		
CONTACTOR	DI		INDUCED DRAFT FAN CONTACTOR 1A1 OPEN	ID FAN 1A REMOTE I/O POWER		
CONTACTOR	DI		INDUCED DRAFT FAN CONTACTOR 1A2 OPEN	ID FAN 1A REMOTE I/O POWER		
CONTACTOR	DI		ID FAN CONT 1A1 DISCONN KEY SW PERMIT TO CLOSE BKR	FIELD POWER		
CONTACTOR	DI		SWGR POWER OFF (GREEN LIGHT)	FIELD POWER		
CONTACTOR	DI		ID FAN FEEDER BKR TRIP PUSH BUTTON	FIELD POWER		
CONTACTOR	DI		INDUCED DRAFT FAN CONTACTOR 1A1 CLOSED	ID FAN 1A REMOTE I/O POWER		
CONTACTOR	DI		ID FAN FEEDER BKR DOOR SWITCH	FIELD POWER		
CONTACTOR	DI		SWGR POWER ON (RED LIGHT)	FIELD POWER		
CONTACTOR	DI		ID FAN CONT 1A1 DISCONN KEY SW TRIP SURGE BKR	FIELD POWER		
MOTOR	AI	TE-946	ID FAN 1A MOTOR INBD BEARING TEMPERATURE			
MOTOR	AI	TE-681	ID FAN 1A MOTOR INBD BEARING TEMPERATURE			
MOTOR	AI	TE-685	ID FAN 1A MOTOR OUTBD BEARING TEMPERATURE			
MOTOR	AI	TE-986	ID FAN 1A MOTOR WINDING TEMPERATURE			
MOTOR	AI	TE-942	ID FAN 1A MOTOR WINDING TEMPERATURE			
MOTOR	AI	TE-980	ID FAN 1A MOTOR OUTBD BEARING TEMPERATURE			
MOTOR	DI	TS-603	XFMR 1A1 TEMP HI-HI	ID FAN 1A REMOTE I/O POWER		
MOTOR	DI	TS-602	XFMR 1A1 TEMP HI-HI	ID FAN 1A REMOTE I/O POWER		
MOTOR	DI	TS-604	1A2 XFMR HI-HI	ID FAN 1A REMOTE I/O POWER		
MOTOR	DI	TS-601	XFMR 1A1 TEMP HI-HI	ID FAN 1A REMOTE I/O POWER		
MOTOR	DI	PS-426	ID FAN 1A MOTOR AIR FILTER DIFF PRESS HI	ID FAN 1A REMOTE I/O POWER		
MOTOR	DI	TS-606	1A2 XFMR HI-HI	ID FAN 1A REMOTE I/O POWER		
MOTOR	DI	TS-605	1A2 XFMR HI-HI	ID FAN 1A REMOTE I/O POWER		
VSD	DI		ID FAN VARIABLE SPEED DRIVE 1A2 FDR BRKR CLOSED			
VSD	DI		ID FAN VARIABLE SPEED DRIVE 1A2 CONTACTOR	ID FAN 1A REMOTE I/O POWER		
VSD	DI		ID FAN VARIABLE SPEED DRIVE 1A1 TURNING GEAR SPEED	ID FAN 1A REMOTE I/O POWER		
VSD	DI		ID FAN VARIABLE SPEED DRIVE 1A2 FDR BRKR CLOSED			
VSD	DI		ID FAN VARIABLE SPEED DRIVE 1A1 CONTACTOR	ID FAN 1A REMOTE I/O POWER		
VSD	DI		ID FAN VARIABLE SPEED DRIVE 1A1 ZERO SPEED	ID FAN 1A REMOTE I/O POWER		
VSD	DI		ID FAN VARIABLE SPEED DRIVE 1A2 MIN SPEED 150 RPM	ID FAN 1A REMOTE I/O POWER		
VSD	DI		ID FAN VARIABLE SPEED DRIVE 1A1 FAN CONTROL RUN			
VSD	DI		ID FAN VARIABLE SPEED DRIVE 1A2 ZERO SPEED	ID FAN 1A REMOTE I/O POWER		
VSD	DI		ID FAN VARIABLE SPEED DRIVE 1A2 TROUBLE	ID FAN 1A REMOTE I/O POWER		

Deleted: 100702

IP7014269

DEVICE	TYPE	SWITCH	DESCRIPTION	POWER SOURCE		
VSD	DI		ID FAN VARIABLE SPEED DRIVE 1A2 FDR BRKR OPEN			
VSD	DI		ID FAN VARIABLE SPEED DRIVE 1A2 TRNGR SPD COMMAND			
VSD	DI		ID FAN VARIABLE SPEED DRIVE 1A2 NORM SP COMMAND			
VSD	DI		ID FAN VARIABLE SPEED DRIVE 1A2 TURNING GEAR SPEED	ID FAN 1A REMOTE I/O POWER		
VSD	DI		ID FAN VARIABLE SPEED DRIVE 1A2 READY	ID FAN 1A REMOTE I/O POWER		
VSD	DI		ID FAN VARIABLE SPEED 1A1 DRIVE READY	ID FAN 1A REMOTE I/O POWER		
VSD	DI		ID FAN VARIABLE SPEED DRIVE 1A1 REFERENCE FAILURE			
VSD	DI		ID FAN VARIABLE SPEED DRIVE 1A1 TROUBLE	ID FAN 1A REMOTE I/O POWER		
VSD	DI		ID FAN VARIABLE SPEED DRIVE 1A1 FAN CONTROL OFF			
VSD	DI		ID FAN VARIABLE SPEED DRIVE 1A1 MIN SPEED 150 RPM	ID FAN 1A REMOTE I/O POWER		
VSD	DO		ID FAN VARIABLE SPEED DRIVE 1A1 NORM SP COMMAND			
VSD	DO		ID FAN VARIABLE SPEED DRIVE 1A1 FDR BREAKER OPEN			
VSD	DO		ID FAN VARIABLE SPEED DRIVE 1A1 FDR BREAKER CLOSED			
VSD	DO		ID FAN VARIABLE SPEED DRIVE 1A1 TRNGR SP COMMAND			
VSD	DO		ID FAN VARIABLE SPEED DRIVE 1A1 BREAKER CLOSED			
VSD	DO		ID FAN VARIABLE SPEED DRIVE 1A1 RUN COMMAND			
VSD	DO		ID FAN VARIABLE SPEED DRIVE 1A1 OFF COMMAND			
VSD	DI		ID FAN VARIABLE SPEED DRIVE 1A1 REGENERATIVE BRAKING			
VSD	AI		ID FAN VARIABLE SPEED DRIVE 1A1 SPEED CONTROL SIGNAL			
VSD	DO		MISCELLANEOUS ALARMS 1A1			
VSD	DI		ID FAN VARIABLE SPEED DRIVE 1A2 REGENERATIVE BRAKING			
VSD	AI		ID FAN VARIABLE SPEED DRIVE 1A2 SPEED CONTROL SIGNAL			
VSD	DO		MISCELLANEOUS ALARMS 1A2			

Deleted: 100702

IP7014270

Section 2B - VFD ISOLATION (VFDI) TRANSFORMERS

VFDI transformers for the VFD input shall be furnished as specified in this section. Each transformer shall be suitable for continuous operation at 100 percent of nameplate rating, with normal life expectancy, based on the specified ambient conditions.

This section describes the features of acceptable transformers. The bidder shall provide detailed information on what is being offered. Depending on whether liquid filled or dry type is being provided, the following clauses will then apply as appropriate. The bidder may propose alternate designs for consideration, provided that the base bid is met first.

Deleted:

2B.1 INPUT ISOLATION TRANSFORMER. Each VFD system shall use a drive isolation transformer to provide common mode voltage protection and phase shifting (for 24 pulse or higher converter bridge, if employed to meet the power quality requirements of Article 2A.2.3).

Deleted: 2

Transformer design shall be a rectifier grade isolation type with a K Factor of 12 for variable torque loads or a K Factor of 20 for constant torque loads when applied to a SCR converter, in accordance with current EPRI recommendations and ANSI/IEEE Standard C57.110. A K Factor of 6 is required for diode rectifier converters. Transformers shall have a BIL rating in accordance with the requirements of ANSI/IEEE Standard C57.12.01.

If dry type construction transformers are required, they shall be AA rated to the base capacity of the VFD and provided with provisions for a fan-cooled system.

If silicone high fire-point fluid-filled type transformers are required due to size or other project-specific need, they shall have a maximum temperature rise of 55° C (top oil and average winding). Paper insulation shall be thermally upgraded. A sudden pressure protection relay shall be provided. If the total oil capacity of both transformers exceeds 500 gallons, the oil sump and containment provisions shall be supplied as part of the VFD system.

Transformer shall be supplied with electrostatic shield, electronic temperature monitoring with alarm and trip contact, auxiliary terminal box, distribution class surge arresters, and vibration dampers.

2B.2 LIQUID FILLED TRANSFORMERS.

2B.2.1 Oil-Filled Transformers. Each oil-filled transformer shall be shipped filled with its oil. The electrical insulating mineral oil shall meet all the requirements of the applicable national or international standards and shall be chemically stable and free from acidity or other corrosive ingredients. The bidder's proposal shall include complete information on the oil.

Deleted: 100702

IP7014271

2B.2.2 Silicone High Fire-Point Liquid Filled Transformers. Each high fire-point insulating liquid filled transformer shall be shipped filled with its liquid. The insulating liquid shall meet all the requirements of the applicable national or international standards and shall be chemically stable and free from acidity or other corrosive ingredients.

Formatted

The bidder's proposal shall include the following minimum information on the proposed silicone high firepoint insulating liquid:

- Name of manufacturer.
- A complete description of characteristics.
- A listing of the specific safety codes and industry standards with which it conforms.
- Documentation verifying approval for use in indoor transformers without vaults or other fire protection.

2B.2.3 Liquid Preservation System. Unless otherwise specified in this section, the insulating liquid preservation system shall be "sealed tank" type. The system shall include a pressure vacuum gauge and a pressure relief device designed to seal the interior of the transformer from the atmosphere and hold the gas plus liquid volume constant within the range of +10 psi (68.9 kilopascal) to -8 psi (55.1 kilopascal).

2B.3 DRY TYPE TRANSFORMERS. The insulating materials used shall be suitable for operation at a temperature of 220° C with a temperature rise limited to 130° C for conventional dry type transformers. Cast coil epoxy insulated transformers with an operating temperature of 185° C shall have a temperature rise limited to 100° C. Cast coil epoxy insulated transformers designed for an operating temperature of 155° C shall be limited to 80° C rise regardless of the allowable rise shown in this section.

2B.3.1 Conventional Dry Type. The windings shall be sealed and protected using a Vacuum Pressure Impregnation (VPI) or encapsulation process. The preheated windings shall be subjected to a dry vacuum cycle, followed by a wet vacuum cycle during which time the windings are impregnated with an electrical grade varnish resin, polyester resin, or silicone resin. A pressure cycle shall then force the resin throughout the insulation. The windings shall then be cured to bind the resin to the insulation material, while eliminating voids which could create hot spots, partial discharge, or cause corona formation. This process shall completely seal and protect the windings from moisture, dust, dirt, salt air, and other industrial contaminants.

2B.3.2 Cast Coil Type. The high voltage windings shall be cast in a mold using fiberglass reinforced epoxy materials. The coil/mold assembly shall be filled with the epoxy

Deleted: 100702

IP7014272

formulation under vacuum. Then, using overpressure, the epoxy shall be forced into all voids and cured. The final product shall be a void free winding design, hermetically sealed, with smooth external surfaces and optimum dielectric, mechanical, and thermal strength. The insulation system shall be nonexplosive, nonflammable, and self-extinguishing. A partial discharge test shall be performed to assure void free construction.

2B.4 MECHANICAL CONSTRUCTION.

2B.4.1 Liquid Filled Transformers. All tanks, bases, radiators, covers, junction boxes when required, and any other attached compartments shall be fabricated from steel of sufficient strength to withstand normal service stresses without distortion or damage to any part. The tank shall be designed to withstand 125 percent of the maximum operating pressure of the liquid preservation system furnished.

For transformers rated 2,500 kVA and below, all joints in transformer tanks, radiators, bases, etc., shall be made gaslight and liquidtight by welding. For transformers rated above 2,500 kVA, the connections between oil radiators and tanks shall be provided with gasketed bolt secured flanges. All covers shall be welded in place. The transformer tank shall be equipped with lifting lugs, pulling eyes, and jack pads, and be suitable for rolling, skidding, lifting, and jacking in all directions.

Each transformer shall be thoroughly cleaned, then given a rust resisting primer coat and two or more finish coats of enamel. The proposal shall include a complete description of the paint system.

2B.4.2 Dry Type Transformers. All transformer enclosures, incoming sections, and outgoing sections shall have completely enclosed sheet metal bottoms. All side panels shall be removable. The ventilated enclosure shall be of heavy gauge sheet steel, and be suitable for outdoor or indoor operation, as specified in this section.

Each transformer enclosure shall be gasketed and shall be provided with tops and shields required to prevent falling or dripping water from entering the enclosure. Each transformer enclosure, both interior and exterior shall be thoroughly cleaned, then given a rust resisting primer coat and two or more finish coats of enamel. The proposal shall include a complete description of the paint system.

External lifting eyes, or other means acceptable to the IPSC for handling of the complete transformer assembly, shall be furnished as part of each enclosure framework so that during movement of the unit its core and coils remain completely protected from damage or shifting.

Deleted: Purchaser

The unit(s) shall also be constructed and supported such that movement in any direction on rollers will not damage or permanently distort the enclosure, frame, or internal apparatus.

Deleted: 100702

IP7014273

2B.5 CORE AND COILS. The core and coil assembly shall be adequately braced to withstand short-circuit forces without damage or displacement, limited only by the transformer impedance. It shall also withstand normal moving and handling without the use of special shipping braces. Verification that short-circuit withstand tests have been performed on a prototype or identical transformer design shall be submitted.

For dry type, the core and coil assembly shall rest on vibration dampers designed to isolate core vibration from the enclosure.

The core shall be constructed of high-grade grain oriented silicon steel. For liquid filled, it shall be securely grounded to the tank, in an externally located terminal box or near a handhole cover located in the top cover of the main tank. For dry type, it shall be securely grounded to the frame. Magnetic flux densities shall be kept well below the saturation point.

Standard values of impedance shall be used, unless otherwise specified in this section.

The basic impulse insulation level shall be inherent to the design, and is to be obtained without the use of supplemental surge arresters.

2B.6 DE-ENERGIZED TAPS. Unless otherwise specified in this section, the high voltage winding shall have four approximately 2-1/2 percent rated full-capacity de-energized taps, two above and two below rated primary voltage. For liquid filled, the external operating mechanism shall be mounted on the side of the transformer tank and have provisions for padlocking. For dry type, the tap connections shall be bolted, flexible jumper, or rigid bar type, easily accessible by removal of one of the enclosure side panels. The tap position indicator and terminal markings shall be clearly visible and identical with those used on the transformer nameplate.

2B.7 FORCED COOLING. If a forced cooled rating is specified in the technical section of this section, the transformer shall be furnished with a complete forced air-cooling system, including cooling fans, fan support brackets, winding temperature controls, fan power supply transformers, circuit protective devices, wiring, terminal blocks, and control panel. The fan power supply transformers shall be factory wired to the low voltage side of the transformer. All current carrying parts shall be sized for the maximum FA rating.

If a forced cooled rating is not specified in the technical section of this section, the transformer shall be furnished with all the components above that must be installed at the time of manufacture. Adding the remaining components at a later date shall be easily accomplished. The only work necessary for future addition of forced air-cooling shall be to mount the fans on existing brackets and connect the motor leads to existing terminal blocks. All current carrying parts shall be sized for the maximum future FA rating.

Deleted: 100702

IP7014274

2B.8 ACCESSORIES. Each transformer shall be furnished with the manufacturer's standard accessories including, as applicable to liquid or dry, the following:

Deleted: 7

- Two grounding pads.
- Stainless steel diagrammatic nameplate.
- Provisions for lifting and jacking.
- Dial or digital winding temperature indicator.
- Liquid temperature indicator.
- Magnetic liquid level gauge.
- Resetting mechanical pressure relief device with visual indicator and alarm contacts.
- Drain and sampling valve.
- Upper filter press valve and connection.
- Pressure vacuum gauge.

One set of spdt alarm contacts shall be furnished on the winding temperature, liquid level, liquid temperature, and pressure relief devices. All alarm contacts shall be wired to identified terminal points in the control compartment.

All accessories shall be clearly identified and described in the proposal.

2B.9 TERMINATION COMPARTMENTS. Each transformer shall include HV and LV termination compartments in accordance with the following paragraphs.

2B.9.1 HV Compartments. HV termination compartments shall be metal-enclosed air insulated terminal chambers with gasketed and bolted covers. The compartments shall be large enough to accommodate working space for field installation of stress cones on HV cables that are shielded and to house other accessories specified, such as surge arresters. Enclosures shall be fabricated of electrogalvanized sheet steel or aluminum and painted in accordance with these specifications.

Indoor enclosures shall be dust-tight and impervious to dripping or failing water. Hardware shall be stainless steel or cadmium plated steel.

All exterior hardware for units located outdoors shall be stainless steel.

Deleted: 100702

IP7014275

2B.9.2 LV Compartments. LV termination compartments shall be of the type specified in this section and in accordance with the following paragraphs.

The compartments shall be metal-enclosed air insulated terminal chambers with gasketed and bolted covers. Enclosures shall be fabricated of electrogalvanized sheet steel or aluminum and painted in accordance with these specifications.

Indoor enclosures shall be dust-tight and impervious to dripping or falling water. Hardware shall be stainless steel or cadmium plated steel.

All exterior hardware for units located outdoors shall be stainless steel.

Terminal compartments shall be one of the following:

Terminal compartments being provided that are "throat" connected to LV equipment shall be designed to connect directly to the specified equipment to form a complete assembly. All required hardware, bus splice plates, flexible connectors, etc., shall be provided.

Deleted: that are specified to be

Terminal compartments being provided that are connected to LV bus duct shall be designed to connect directly to the specified bus duct to form a complete assembly. All required flanges, gaskets, hardware, bus splice plates, flexible connectors, etc. shall be provided.

Deleted: that are specified to be

Terminal compartments being provided that are connected to LV cables shall be designed to accommodate field installation of the size and number of cables specified from the direction indicated in this section.

Deleted: that are specified to be

2B.10 FACTORY TESTING. Each transformer shall be completely assembled and tested at the factory in accordance with applicable standards and the manufacturer's standard practices, using materials and equipment that will be a part of the final assembled unit and receive the routine and design tests as dictated by the latest revision of the applicable standard. Certified test reports shall be supplied, summarizing the results of all tests. In particular, the calculated hottest spot temperature rises of the primary and secondary windings shall be shown.

Hottest spot temperature rises shall conform to the appropriate standard, and shall be calculated using mathematical models verified by thermal tests on test windings and/or a prototype transformer representative of the design family. Tests shall have been conducted at conditions of full load or conditions simulating full load. Complete data shall be available for IPSC's review.

Deleted: Purchasers

The IPSC reserves the right to witness factory testing and shall be informed in writing at least 10 days prior to the scheduled starting date of tests so that arrangements can be made for a representative to be present.

Deleted: Purchaser

Deleted: 3

Deleted: 100702

IP7014276

2B.11 SCOPE OF SUPPLY. Provide input isolation transformers for configurations in which existing transformers are not suitable. These are not required on drives which include integral input transformers.

2B.12 SCHEDULE OF CONTRACT SUBMITTALS.

Submittal Item Activity (To be received no later than...)	Days After Award of Purchase Order
Outline Drawings	30
Schematic and wiring diagrams	45
Nameplate Drawings	30
Design data and performance curves	30
Certified test reports	15 days after tests are completed

2B.13 PERFORMANCE AND DESIGN TECHNICAL REQUIREMENTS.

Transformer name	VFD INPUT TRANSFORMER	ID Number	1CCE-XF-1A1, -1B1, -1C1, -1D1, -1A2, -1B2, -1C2, -1D2
Transformer type	Silicone Fluid or Cast Coil	Quantity, each	1
Standard	ANSI/IEEE C57		
Self-cooled rating capacity	As required kVA		
Force-cooled rating capacity	Provisions kVA		
Primary voltage	6900 volts	Secondary voltage	As required volts
Primary insulation	75 kV BIL	Secondary insulation	Full kV BIL
Primary winding	Delta	Secondary winding	Wye-grounded/Delta
Primary termination compartment	Yes	Secondary termination compartment	Yes
Frequency	60 Hz		

Deleted: Type
Deleted: Calendar Days
Deleted: Event/Date
Deleted: 45
Deleted: After
Deleted: Contract Award
Deleted: DOCS
Deleted: DOCS
Deleted: 90
Deleted: After
Deleted: Contract Award
Deleted: DOCS
Deleted: 45
Deleted: After
Deleted: Contract Award
Deleted: DOCS
Deleted: 120
Deleted: After
Deleted: Shipment
Deleted: ¶ Delta
Deleted: 100702

IP7014277

Number of phases	3	
Average winding rise	55/80	° C
Cooling class	OA/AA	
Enclosure type	NEMA 1	
Vector relationship	12 pulse	
HV de-energized taps	±2 x 2.5%	
Sound level	75	dBA
Site altitude	4700 ft.	
Impedance	As required	%Z at self-cooled rating
Maximum ambient temperature	50	° C
Maximum monthly average ambient temperature	30	° C
Average annual ambient temperature	20	° C
Maximum 24 hour average ambient temperature	30	° C
Liquid Preservation system	Sealed tank	
Conductor material	Copper	
Paint system and color	Manufacturer's Standard	
Auxiliary ac power supply	120 Volt	
K-factor rating for nonsinusoidal loads	As required for service	
Neutral grounding	Solid	
Unusual operating conditions	VFD input	
Special accessories	Electronic Temperature Monitor	
Additional requirements	Space Heaters	

Deleted: 115

Deleted: 24

... [1]

... [2]

Deleted: 100702

IP7014278

2B.14 REQUIRED BID SUBMITTALS.

Submittal Description

Complete description of proposed transformer

Preliminary outline Drawings showing, estimated weights, dimensions, oil volumes, and locations of major accessories

Specifications of insulating oil

Descriptive literature of all equipment proposed

Summary description of codes and standards used if different than specified including a review of major differences

List of recommended spare parts

List of special and maintenance tools to be furnished

Bidder experience record with proposed equipment

List of factory routine tests

Complete description of the extent of shop assembly of components

2B.15 TECHNICAL DATA.

Manufacturer	_____	
Factory location	_____	
Quantity	_____	
Type (oil, dry, cast, etc.)	_____	
Winding materials	_____	
kVA, self-cooled	_____	kVA
kVA, force-cooled (top rating)	_____	kVA
High voltage	_____	V

Deleted: 100702

IP7014279

kV BIL	_____	kV BIL
Delta or wye	_____	
Taps	_____	
Low voltage	_____	V
kV BIL	_____	kV BIL
Delta or wye	_____	
Taps	_____	
Average winding rise-HV	_____	° C
Insulation system maximum temp-HV	_____	° C
Insulation system maximum temp-LV	_____	° C
Cooling class	_____	
Frequency	_____	Hz
Enclosure type	_____	
Impedance	_____	%Z
Vector group	_____	
Maximum sound level	_____	dBA
Liquid preservation system	_____	
No-load losses	_____	kW
Load losses	_____	kW
Fan losses	_____	kW
K-factor rating	_____	

Deleted: 100702

IP7014280

	_____
Total weight	_____
Dimensions, L x W x H	_____ x _____ x [ ]
Fluid type	_____
Fluid volume	_____
HV winding description	_____
LV winding description	_____
Terminal compartment type	_____
Accessories	_____

Deleted: Fluid r

Deleted: equired

Deleted: 2B.16 UNIT ADJUSTMENT PRICES.¶
¶
The following unit prices may be used to adjust the Contract price for additions or deletions to compensate for modifications to the work in accordance with the applicable requirements of the contract Regulations. Each unit adjustment price is the total cost of the specific unit of work to be billed to the Purchaser for additions or to be deducted from the Contract price for deletions. Each unit price is a firm fixed price, includes furnishing complete the specific unit designated, and includes all associated engineering and design costs, overtime, and profit markup. If an item is not listed below, unit adjustment pricing is not required for that item.¶

Deleted: 100702

IP7014281

Page 8: [1] Deleted **Jesse D. Evins** **12/10/2002 1:46 PM**

Surge arrester rating	9	kV
Auxiliary dc power supply		

Page 8: [2] Deleted **Jesse D. Evins** **12/10/2002 1:47 PM**

Neutral grounding equipment	None	
Resistance value	ohms - N/A	2 to 5 amperes ground fault current
Resistance time rating	N/A	
Neutral grounding scheme manufacturer	N/A	

Section 2C - MEDIUM VOLTAGE INDUCTION MOTORS

2C.1 GENERAL. This motor specification is applicable to all medium voltage, 3-phase, squirrel-cage induction electric motors.

2C.2 DESIGN AND CONSTRUCTION. Design and construction of each motor shall be as specified herein.

Motors shall be designed for use with a variable frequency drive.

Deleted: direct-on-line (full voltage) starting

All motors shall be capable of continuous running duty.

2C.2.1 Nameplates. All motor nameplate data shall conform to the requirements of the standards listed in this section. The following additional nameplate data shall be included:

- Insulation system class designation.
- Maximum ambient temperature for which motor is designed and temperature rise by resistance.
- Starting capabilities at rated volts and at minimum starting voltage (may be a separate nameplate):
  - -- Number of successive starts (coasting to a rest between starts) allowable after:
    1. Motor initially at maximum specified ambient temperature.
    2. Motor driving maximum expected operating load in the maximum specified ambient temperature and coasting to a stop.
  - -- Cooling period required after completion of the preceding maximum number of starts before making an additional start with the motor in the following conditions:
    1. Motor running driving maximum expected operating load in the maximum specified ambient temperature.
    2. Motor running with the driven equipment uncoupled.
    3. Motor at rest after being de-energized on reaching rated speed.
  - -- Direction of rotation and voltage sequence.

Deleted: 100702

IP7014283

- For dual voltage rated or multispeed motors, connection diagram for the specified voltage or the specified speeds.
- For motors with connections to an external lubricant recirculating system, or with an integral forced lubrication system, oil pressure and oil flow required.
- Type and grade of bearing lubricant, attached adjacent to lubricant filling devices.
- For motors with current transformers for differential protection, connection diagram indicating motor lead terminal connections.
- For motors with air filters, recommended set point for differential pressure device, attached on or near device enclosure.

All motor nameplates and attachment pins shall be corrosion-resistant metal.

2C.2.2 Enclosures. New motors shall match critical dimensions and weight of existing motors as shown on the reference drawings. Enclosure parts for all motors (e.g., frames, bearing brackets, terminal housings, external fan covers) shall be made of cast iron, cast steel, sheet steel, or steel plates. Aluminum enclosure parts are not acceptable.

Air filters are required and shall be removable from the outside of the motor. Washable impingement type air filters shall be furnished.

Cooling fans, when provided, shall be bidirectional to allow for continuous motor operation in either a clockwise or counterclockwise direction. Specific cases where such a fan is impractical for mechanical reasons shall be brought to the attention of IPSC.

2C.2.3 Air Filter Pressure Differential Devices. A pressure differential device shall be provided at the air inlet of all motors furnished with air filters. The device shall be furnished with a snap-action sealed switch having one normally open and one normally closed contacts (Form C) which change state (close) on high-pressure differential. The switch shall have an adjustable set point which is accessible for calibration while the motor is in service. The initial adjustment shall be made at the motor supplier's factory. The purpose of the switch is to prevent motor excessive temperature by alarming clogged filters.

2C.2.4 Insulation And Windings. All stator coils shall utilize copper conductors, shall be form-wound, and shall be insulated with mica based materials. All stator winding materials shall have a Class F (155° C) thermal classification and shall utilize a vacuum pressure impregnation (VPI) system.

Motor windings shall be furnished with a fly ash resistant coating.

Deleted: specified and shall be removable w

Deleted: the Purchaser

Deleted: 2C.2.2.1 Totally Enclosed Motors. Totally enclosed motors shall be furnished with drain holes and rotating shaft seals. Drain holes shall be provided with combination water drain-breather plugs.¶
¶
When totally enclosed fan cooled enclosures (IP54, 1C411) are specified, the Supplier shall have the option of selecting from one of the following enclosure constructions:¶
¶
. Totally Enclosed Fan Cooled . IP54 . 1C411¶
. Totally Enclosed Tube Cooled . 1P54 . 1C511¶
. Totally Enclosed Air-to-Air Cooled . 1P54 . 1C611¶
¶
External cooling fans for fan cooled motors shall be fabricated of brass, bronze, aluminum alloy containing not more than 0.2 percent copper, malleable iron, or plastic. All plastic fans shall be fabricated of a reinforced thermosetting plastic.¶
¶
Totally enclosed motors shall have all exposed metal surfaces protected with a corrosion-resistant polyester paint or coating and shall have enclosure interior surfaces and the stator and rotor air gap surfaces protected with a corrosion-resistant alkyd enamel or with polyester or epoxy paint or coating. The stator air gap surfaces may be protected with a vacuum pressure impregnation coating. Bolts, nuts, screws, and other hardware items shall be corrosion-resistant or zinc dichromate treated metal. Motors furnished with sliding type bearings shall have a rotating labyrinth shaft seal furnished on the shaft extension end of the motor.¶
¶

Deleted: 100702

IP7014284

All multiturn form-wound stator coils shall have adequate turn-to-turn insulation to enable them to pass the Figure 2 Alternative Coil Impulse Voltage Withstand Envelope, which is described in IEEE Standard 522.

2C.2.5 Temperature Rise. The temperature rises at rated output shall not exceed those for a Class B thermal insulation classification.

2C.2.6 Space Heaters. All motors shall have space heaters. Heaters shall be located and insulated so they do not damage motor components or finish.

Space heaters shall be sized as required to maintain the motor internal temperature above the dew point when the motor is idle.

2C.2.7 Terminal Housings. A terminal housing for power leads and a separate accessory terminal housing for accessory leads shall be furnished on all motors.

All terminal housings shall be externally mounted on the motor frame enclosure. Terminal housings for all motors shall be cast iron or sheet steel. Minimum protection requirements shall be equivalent to NEMA 4 (IP 54).

All motor leads located in the housings shall be permanently marked for ease of identification.

A separate accessory terminal housing shall be provided for space heater leads, temperature detector leads, and other similar accessory equipment leads. It shall be complete with screw type terminal blocks for termination of such leads. Each terminal in the blocks shall be identified and marked for its respective leads. Accessory terminal housings shall be accessible from outside the motor.

When current transformers for motor differential protection are specified, the current transformers shall be mounted in the power lead terminal housing.

Motor power lead terminal housings shall be large enough to provide working space for the field fabrication of stress relief kits for shielded cable within the housing and to contain the stress relief kits after fabrication. The minimum distance from the motor leads to the cable entrance plate of the motor terminal box shall be as follows:

- Motors with cable leads - 24 inches (610 mm).
- Motors with busbar leads - 36 inches (914 mm).

Location and dimensions of terminal housings shall be acceptable to IPSC.

Deleted: the Purchaser

Deleted: 100702

IP7014285

2C.2.8 Leads. All leads, including motor power leads, space heater leads, and temperature detector leads, shall be wired into their respective terminal housings.

All motors shall have the direction of rotation marked by an arrow mounted visibly on the stator frame near the terminal housing or on the nameplate and the leads marked for phase sequence to correspond to the direction of rotation and supply voltage sequence.

Leads for dual voltage rated or for multispeed motors shall be easily connected or reconnected in the terminal housing for the operating voltage or for the specified speeds.

When current transformers for motor differential protection are specified for single-speed motors, the motor phase leads shall be wired to the motor power lead terminal housing for connection for self-balancing current type differential protection. Each current transformer shall encircle all power leads to the associated winding. The motor winding wye or delta connections shall be completed at the factory, leaving only three leads, TI, T2, T3 (U, V, W), for field connection in the power lead terminal housing. The wye or delta connection shall be completed in a manner which will allow easy access to the end of each phase for field testing.

When current transformers for motor differential protection are specified for two-speed motors, the motor phase leads shall be wired to the power lead terminal housing for connection for self-balancing current type differential protection. Each current transformer shall encircle all power leads to the associated winding. The motor winding wye or delta connections shall be completed at the factory, leaving only six leads, TI, T2, T3, T4, T5, T6 (U1, VI, WI, U2, V2, W2), for field connection in the power lead terminal housing. The wye or delta connections shall be completed in a manner which will allow easy access to each end of each phase for field testing.

Cable motor leads shall utilize stranded copper conductors insulated with silicone rubber covered with a glass braid or acceptable equal.

2C.2.9 Bearings. The type of bearing furnished shall be as specified or the motor supplier shall determine the type of bearing to be furnished based upon the load, speed, and thrust conditions of the driven equipment.

Thrust bearings for vertical motors shall have a life as specified and shall be capable of operating for extended periods of time at any of the thrust loadings imposed by the specific piece of driven equipment during starting and normal operation without damage to the bearing, the motor frame, or other motor parts.

2C.2.9.1 Sliding Type Bearings. Sleeve bearings for horizontal motors shall be oil ring lubricated type. The bearings, end bells, and bearing housings shall be split type when available. Air gap measurement holes or other acceptable means shall be provided in each motor end enclosure for checking air gap ~~of sleeve bearing motors.~~

Deleted: 100702

IP7014286

Sleeve bearings on horizontal motors shall be designed and located centrally, with respect to running magnetic center, to prevent the rotor axial thrust from being continuously applied against either end of the bearing. The motors shall be capable of withstanding without damage the axial thrusts that are developed when the motor is initially energized.

Vertical motors with plate type thrust bearings shall have oil lubricated split sleeve guide bearings.

2C.2.9.2 Bearing Lubrication System. Motor shall be designed to use the existing pressurized bearing oil system.

2C.2.9.3 Miscellaneous Bearing Requirements. All bearing mountings shall be designed to prevent the entrance of lubricant into the motor enclosure or dirt into the bearings and shall be provided with pipes and drain plugs.

Bearings and bearing housings shall be designed to permit disassembly in the field for inspection of the bearings or removal of the rotor.

All oil-lubricated bearings shall be provided with oil level sight glasses marked for required oil level at motor running and standstill. Plastic sight windows or bottles shall be of a material not adversely affected by continuous exposure to sunlight.

Insulation shall be provided to prevent circulation of shaft current on bearings, on bearing temperature detectors, or on oil piping connections.

Bearing lubricants shall contain a corrosion inhibitor. The type and grade of lubricant shall be indicated on a nameplate attached to the motor frame or end shield adjacent to the lubricant-filling device. The Contractor shall furnish all lubrication information required to assure proper equipment startup and subsequent bearing maintenance.

2C.2.10 Oil Lubrication Systems. For the existing external lubricant recirculating system, the Contractor shall furnish pipe taps for oil inlet and outlet connections in addition to the internal lubricant recirculating system previously specified. The Contractors lubrication system shall maintain proper lubrication and cooling of the bearings over the complete performance range of the external lubricant recirculating system. The internal lubricant recirculating system shall provide proper lubrication and cooling of the bearings during startup and coast-down with no oil flow from the external lubricant recirculating system.

Where water cooling of bearing oil is required, the Contractor shall furnish pipe taps for the water inlet and outlet connections. The Contractors lubrication system shall maintain proper cooling of the oil and bearings under the cooling water conditions specified.

Deleted: Unless specified otherwise, bearing lubrication shall be furnished by an internal lubricant recirculation system. Oil reservoir capacity and ventilation of the bearing housing and oil reservoir shall be as required to adequately maintain proper cooling of the oil and bearings

Deleted: 2C.2.9.3 Antifriction Bearings. Antifriction bearings for horizontal shaft motors shall be designed and fabricated to have a life as specified.¶
¶
Motors furnished with spherical roller thrust bearings shall be furnished with deep groove radial guide bearings.¶
¶
Antifriction bearings shall be grease lubricated except where the specified speed and thrust require oil lubrication for the specified life. Grease lubricated bearings shall be self-lubricating and regreaseable.¶
¶

Deleted: 4

Deleted: Filler caps or grease fittings for lubrication shall be arranged for safe, easy addition of lubricant from the outside of the motor while the motor is in service.¶
¶

Deleted: when required

Deleted: Supplier

Deleted: If an

Deleted: is provided

Deleted: Supplier

Deleted: Pipe taps for vertical motors shall be arranged to recirculate oil from the motor thrust bearing oil reservoir for cooling.

Deleted: Supplier

Deleted: Supplier

Deleted: Supplier

Deleted: 100702

IP7014287

2C.2.11 Rotors. All induction motors shall have squirrel-cage rotors. Rotors shall be adequately sized to avoid overheating during acceleration of the motor and driven equipment. Rotors shall be copper or copper alloy cage material. All fabricated cage rotors shall include a swaging or wedging method during the installation of rotor bars to prevent rotor bar vibration.

Deleted: Rotors may be die-cast aluminum construction for ratings up to 560 kW (750 hp). Above 560 kW, the r

Deleted: except that aluminum cage materials will be considered on 2-pole motors only.¶
¶

All motor rotating components shall be dynamically balanced after mounting on the shaft. Motor vibration shall not exceed the peak-to-peak amplitude values listed in the following table. In addition, the magnitude of vibration values for twice the line frequency vibrations shall not exceed 0.0005 inches (0.013 mm).

Synchronous Speed, rpm	Maximum Amplitude, Inches, (mm) Peak-to-Peak
999 and below	0.001 (0.025)

Deleted: 3,000 and above
Deleted: 0.0005 (0.013)
Deleted: 1,500-2,999, inclusive
Deleted: 0.001 (0.025)
Deleted: 1,000-1,499, inclusive
Deleted: 0.00125 (0.032)
Deleted: 5
Deleted: 38

The minimum clearance space required for removal of the rotor shall be indicated both in the proposal data and on the dimensional outline drawing.

2C.2.12 Shafts. All shafts shall be solid. Each shaft shall be furnished with a corrosion-resistant treatment or shall be made of a corrosion-resistant material.

The output shafts of motors furnished with sleeve bearings shall be circumscribed with permanent marks indicating the motor magnetic center and end float limits when level and running at rated speed. A permanent, identified reference point shall be indicated or attached to the bearing housing or shaft seal. The markings shall be easily identifiable for use during motor installation.

For horizontal sleeve bearing motors, the rotor end float and coupling end play shall be in accordance with NEMA or IEC requirements. The distance from the magnetic center line mark to each end float limit mark shall be not less than 37.5 percent of the total rotor end float.

2C.2.13 Grounding Pads. External grounding pads shall be provided in at least two locations (near mounting feet at opposite corners).

2C.2.14 Torque Characteristics. Breakaway, run-up/pull-up, and pull-out/breakdown torque shall at all times be at least 10 percent higher than the load-torque of the driven machine, at minimum specified starting voltage. Load-torque characteristics are specified in Section 2A

Deleted: 100702
Deleted: will be furnished by the driven equipment supplier:

IP7014288

and as shown on the speed torque curve in Article 2A.2.2; however, the responsibility for successful starting under the given conditions rests with the motor manufacturer.

2C.2.15 Quality Control Tests and Inspections. Each motor shall be tested and inspected at the manufacturer's factory to determine that it is free from electrical or mechanical defects and to provide assurance that it meets the requirements of these specifications. Test procedures shall be in accordance with IEEE, NEMA, or IEC test procedures for 3-phase induction motors.

Copies of reports of the quality control tests and inspections for each motor shall be submitted prior to shipment of the motor from the manufacturer's factory.

The routine tests listed in NEMA or IEC shall be performed on each motor.

One of the motors shall have complete tests in accordance with IEEE Standard 112.

Additional tests shall be performed to determine the efficiency and power factor for each motor.

2C.2.16 Drawings and Engineering Data. Motor dimensional drawings shall include the following information in addition to the requirements listed hereinbefore:

- Complete nameplate data.
- Rotor weight and motor total weight.

2C.2.17 Couplings. The motor shaft shall be designed so that the existing motor half coupling can be transferred to the new motor and reused. The existing coupling shall be reconditioned such that the existing vibration dampening materials are replaced with new. 2C.2.18 Soleplates. Existing sole plates shall be used. 2C.2.19 Critical Speeds. Motors shall be designed to keep torsional and rotational natural frequencies of vibration at least 25 percent above or below, preferably above, the motor rated speed ranges to avoid resonant vibration over the operating speed range of the equipment-motor unit.

2C.2.20 Vibration Transducer Mounting. When specified, a vibration transducer mounting for field installation of a Purchaser-furnished vibration transducer shall be provided on the drive shaft bearing housing of the motor. The vibration transducer and monitoring equipment will be furnished under separate specifications.

2C.3 SCOPE OF SUPPLY. Provide squirrel cage induction motors for configurations in which existing motors are not suitable.

2C.4 SCOPE OF ERECTION/CONSTRUCTION. Motors must be constructed to replace existing motors on the existing foundation and on existing sole plates using the existing

Deleted: For motors purchased separately from the driven equipment, coupling drawings or templates for shaft machining will be provided by the Purchaser. Half couplings will be supplied to the Supplier by the driven equipment supplier. The Supplier shall mount and secure the half couplings to the motor shafts.¶
¶
2C.2.18 Plugging Switch. A plugging switch shall be furnished on each motor where the time for the motor to accelerate the driven equipment plus 1 second is equal to or greater than the safe stalled time. The switch shall have normally open contacts set to close on increasing acceleration.¶
¶

Deleted: 9

Deleted: Soleplates shall be furnished when specified. Soleplate drawings shall be furnished indicating the size and location of the anchor bolts holding each soleplate to the concrete foundation and all mounting, alignment, and connection details and procedures. Motor mounting bolts shall be furnished with each soleplate. All foundation anchor bolts, washers, and nuts will be furnished by others.¶
¶
Soleplate anchor bolt cross-sectional area shall not be less than the cross-sectional area of the motor mounting bolts. Anchor bolt holes shall be shop drilled and shall be oversized 1/4 inch (6 mm) in diameter. The anchor bolts shall be located under the motor, and all projections, including washers and nuts, shall clear the motor and its appurtenances completely. Grout holes shall be provided in the central portion of each soleplate. Motor mounting holes shall be drilled and tapped.¶
¶
Motors shall be designed to permit convenient access for drilling vert ... [1]

Deleted: 20

Deleted: 21

Deleted: 2C.2.22 Variations From Rated Voltage and Rated Frequency. Unless specified otherwise, induction motors shall operate successfully under running conditions at rated load with a variation in the voltage or the freq ... [2]

Deleted: 4

Deleted: 5

Deleted: 100702

Deleted: preferably

IP7014289

motor coupling and supply conduits.. Contractor shall include a detailed description of work required to mate new motor with existing fan and motor foundation. The written work description shall be submitted for review with the motor dimensional drawings and included in the instruction manuals. The work description shall be of sufficient detail to provide the installing contractor with all information needed to install the new motors and modify any of the existing equipment.

Deleted: Supplier

2C.5 SCHEDULE OF CONTRACT SUBMITTALS.

Deleted: 6

Submittal Item Activity (To be received no later than…)	Days After Award of Purchase Order
Superimposed medium voltage motor and driven equipment speed-torque curves at minimum, rated, and maximum voltage range	15
Superimposed thermal limit and time-current curves for medium voltage motors at minimum, rated, and maximum voltage range	15
Power factor versus percent load curves for medium voltage motors	15
Motor dimensional drawings	30
Wiring diagrams	45
Motor nameplate data	30
Medium voltage motor rotor removal clearance drawings	30
Bearing disassembly and reassembly drawings	With Instruction Manual

Deleted: Type ... [3]

Deleted: DOCS ... [4]

Deleted: DOCS ... [5]

Deleted: DOCS ... [6]

Deleted: DOCS ... [7]

Deleted: DOCS ... [8]

Deleted: Bearing disassembly and reassembly drawings ... [9]

Deleted: DOCS ... [10]

Deleted: DOCS ... [11]

Deleted: Part of general submi ... [12]

Deleted: 100702

IP7014290

2C.6 PERFORMANCE AND DESIGN REQUIREMENTS. This motor data sheet is applicable for motors with nameplate ratings:

Deleted: 7

Including and below N/A

Including and above 7415

Driven Equipment	B&V Tag Number	Quantity
I. D. Fan	1CCE-FAN-1A	1

Minimum Output Rating				
NEMA (hp)	Service Factor	IEC (kW)	Synchronous Speed (rpm)	Direction of Rotation*
8200	1.15	N/A	900**	CW/CCW

Deleted: 7415

Deleted: 0

Deleted: 954

* Direction of shaft rotation shall be viewed from motor end opposite to motor output shaft and looking at the driven equipment. Contractor to coordinate direction of rotation with respective existing I.D. Fan.

** Motors shall be designed to operate continuously at 15% overspeed.

Horizontal shaft mounting arrangement - horizontally mounted motor

NEMA motor Horizontal, single shaft extension

Vertical shaft mounting arrangement - vertically mounted motor

Deleted: IEC motor¶ ¶ Code I: IM N/A¶ ¶ Code II: IM N/A¶ ¶

NEMA motor N/A

Rated voltage (volts) /frequency (hertz) As Required/Varies

Deleted: ¶ IEC motor¶ ¶ Code I: IM N/A¶ ¶ Code II: IM N/A¶

Maximum ambient temperature (° C) 50

Minimum ambient temperature (° C) -35

Deleted: 0

Altitude 4700 ft

Efficiency, minimum High percent

Motors shall be manufactured to NEMA/ANSI

Deleted: either

The following features shall be provided:

Deleted: 100702

IP7014291

Feature	NEMA	IEC
Enclosure/degree of protection	WP II	

Deleted: Method of cooling
Deleted: N/A
Deleted: Hazardous classification
Deleted: N/A
Deleted: N/A

Enclosure openings shall be covered with screens manufactured from the following materials: Stainless

Air filters: Stainless

No-load sound produced by the motor at 1 meter: 80 dBA

Deleted: 3

Deleted: Full load starts per year
Deleted: 10
Deleted: Surge protection to be located in motor terminal box
Deleted: N/A

Current transformers: Yes 600:5

Stator winding temperature devices: RTDs - 10 ohm copper (2 per phase per winding)

Deleted: 0
Deleted: platinum
Deleted: six per motor

Starting voltage range Minimum VFD percent Minimum VFD percent

Starting current during acceleration: 125%

Deleted: Motor safe stall time at minimum starting voltage
Deleted: 2
Deleted: seconds
Deleted: shall not be less than motor acceleration time at
Deleted: minimum voltage plus
Deleted: Yes

Incoming power supply cable and terminations: Must match existing cables or cables required that will fit in existing conduits.

Anticondensation space heaters: Space heater shall be provided. Space heater circuits exceeding 10 amperes, single-phase shall be configured 3 phase.

Space heaters shall be energized at 208., 3Ø volts

Deleted: 120

The following dollar value will be used to evaluate motor energy losses at driven equipment maximum brake horsepower (kW) as defined on the motor proposal data sheet:

Dollars (US)/kW $1,275.00

Deleted: 100702

IP7014292

Horizontal motors

Soleplates	Use existing soleplates.
Terminal box location, viewed from motor end opposite to motor output shaft	Match existing
Horizontal motor bearing type	Sleeve bearings forced oil lubricated
Bearing temperature detectors shall be furnished	On each motor sleeve bearing
Bearing temperature detectors shall be	Type E thermocouple
Bearing lubrication system	Oil rings
Bearing lubrication system cooling	Existing

Driven equipment characteristics

Driven equipment inertia	wk^2 - lb ft^2	388,240	
Synchronous speed required torque		954 rpm	

Deleted: Soleplates for motors shall be provided for all motors not mounted on a common skid with the driven equipment

Deleted: To be determined during detailed design

Deleted: Anti-friction bearings shall have an AFBMA (Anti-friction Bearing Manufacturer's Association) L10 life of not less than the following when operating under the load, speed, and thrust requirements of the driven equipment:¶
¶
Connection to Driven Equipment . Hours¶
¶
Direct . 140,000¶

Deleted: Vertical motors

Deleted: Motor bearing type

Deleted: N/A

Deleted: Bearings shall have a life when

Deleted: N/A

Deleted: operating under the load, speed, and

Deleted: thrust requirements of the driven

Deleted: equipment of not less than

Deleted: Vertical thrust¶

Deleted: Maximum upward

Deleted: N/A

Deleted: Continuous upward

Deleted: N/A

Deleted: Maximum downward

Deleted: N/A

Deleted: Continuous downward

Deleted: N/A

Deleted: RTDs - 100 ohm platinum

Deleted: Self-cooled

Deleted: 16

Deleted: 347,700

Deleted: 100702

IP7014293

Starting load	Fan - Dampers Closed	

Deleted: Open

2C.7 ADDITIONAL REQUIREMENTS.

Deleted: 8

2C.7.1 Special Requirements. Special requirements beyond the established standards have been defined for this project.

Deleted: 8

Provided below are technical exceptions to, or deviations from, the requirements specified in the associated Technical Specifications for this equipment or service. These exceptions and deviations shall govern over the standard specifications only to the extent of the difference.

2C.7.2 Codes and Standards. Work performed under this specification shall be done in accordance with the following codes and standards. The version that is latest adopted, published, and effective at the date of this document shall apply unless specifically stated otherwise. These references shall govern the work except where they conflict with Purchaser specifications. In cases of conflict, the latter shall govern to the extent of such difference.

Deleted: 8

ANSI designed motors	NEMA MG1, ANSI C50.41, IEEE 112, IEEE 522

Deleted: Works . In Accordance With¶
¶
IEC designed motors . N/A¶
¶

2C.7.3 Material Specifications.

Deleted: 8

2C.7.3.1 Approved Manufacturers.

Deleted: 8

For the following components, only the listed manufacturers are recognized as maintaining the level of quality of workmanship required by these specifications. If the Contractor wants to propose a non-listed manufacturer that is considered to provide an equivalent level of quality, this manufacturer must be identified and supporting testimony provided. Acceptance of the manufacturer as a substitute is at the discretion of IPSC.

Deleted: Supplier

Deleted: the Purchaser

Component	Manufacturer
Medium voltage induction motors	ABB
	Electric Machinery
	General Electric
	Reliance
	Siemens
	U.S. Motors
	TECO - Westinghouse Motor Co.
	Toshiba

Deleted: GEC Alsthom

Deleted: G

Deleted: WEG

Deleted: 100702

IP7014294

2C.8 REQUIRED BID SUBMITTALS. The following data shall be submitted for use in the evaluation of bids. The proposal will be considered incomplete until the required submittals are received.

Submittal Description

Overall size, weight, and configuration for each motor and arrangement of accessory items

Overall drawing showing center lines and major dimensions of each motor

Efficiency versus percent load curves

Superimposed speed-torque curves

Motor thermal limit curves

2C.9 TECHNICAL DATA.

Motor

Separately Purchased Equipment

Manufacturer _____

Model No. _____

Location of manufacture _____

Design standards (i.e., NEMA, IEC) _____

Driven equipment maximum brake HP or kW _____

Motor nameplate _____

Service factor (NEMA motors only) _____

Motor losses when operating at the driven equipment maximum brake HP or kW _____

Safe stalled time at minimum starting voltage _____ seconds

Acceleration time at minimum starting voltage _____ seconds

Motor bearing type _____

Enclosure _____

Starting voltage range

Deleted: 2C.8.4 Test Requirements. The following testing shall be conducted in accordance with the specified source. This testing is to be considered part of the defined Scope of Work, and all associated costs are the responsibility of the Supplier unless specifically identified as a Bid Option or Purchaser-conducted. Tests identified as an option are to be priced separately on the Option Forms. If identified as Purchaser-conducted, costs for the initial test will be the responsibility of the Purchaser. However, the Supplier is responsible for all costs associated with correcting deficiencies and retesting in the event of a test failure.¶
¶
Tests . In Accordance with . Conducted by¶
¶
Routine shop tests . NEMA¶
¶
2C.8.5 Supplemental Requirements. The following supplemental specifications contain additional requirements which are not included in the Technical Specifications.¶
¶
Supplemental Specification¶
¶
Q001 . General Quality System Requirements¶
Q004 . Quality System Requirements¶
Q301 . Manufacturer's Standard Coating¶
Q400 . General Equipment Requirements¶
¶

Deleted: 9

Deleted: 10

Deleted: 100702

IP7014295

	_____
Bearing lubrication system	_____
Space heater rating, watts/voltage/phase	_____ / _____ / _____
Minimum clearance required to remove rotor	_____
Height	_____
Length	_____
Width	_____
Weight	_____
Stator	_____
Rotor	_____
Total	_____
Overall dimensions, including shaft extension	_____
Length	_____
Width	_____
Height	_____
List of special tools that will be furnished	_____
Field assembly work required	_____

Deleted: 2C.11 UNIT ADJUSTMENT PRICES. The following unit prices may be used to adjust the Contract price for additions or deletions to compensate for modifications to the work in accordance with the applicable requirements of the Contract Regulations. Each unit adjustment price is the total cost of the specific unit of work to be billed to the Purchaser for additions or to be deducted from the Contract price for deletions. Each unit price is a firm fixed price, includes furnishing complete the specific unit designated, and includes all associated engineering and design costs, overtime, and profit markup. If an item is not listed below, unit adjustment pricing is not required for that item.¶
¶

Deleted: 100702

IP7014296

Page 7: [1] Deleted **Julie A. Gregory** **12/10/2002 2:27 PM**

Soleplates shall be furnished when specified. Soleplate drawings shall be furnished indicating the size and location of the anchor bolts holding each soleplate to the concrete foundation and all mounting, alignment, and connection details and procedures. Motor mounting bolts shall be furnished with each soleplate. All foundation anchor bolts, washers, and nuts will be furnished by others.

Soleplate anchor bolt cross-sectional area shall not be less than the cross-sectional area of the motor mounting bolts. Anchor bolt holes shall be shop drilled and shall be oversized 1/4 inch (6 mm) in diameter. The anchor bolts shall be located under the motor, and all projections, including washers and nuts, shall clear the motor and its appurtenances completely. Grout holes shall be provided in the central portion of each soleplate. Motor mounting holes shall be drilled and tapped.

Motors shall be designed to permit convenient access for drilling vertically through the motor feet for installation of tapered dowel pins after the motors are mounted with driven equipment. Where motor design requires angle drilling of dowel pin holes through the motor feet, the Supplier shall start the dowel pin holes at the required angle, and shall drill each hole to a depth not less than one-half the thickness of the motor feet. The tapered dowel pins shall be furnished by the Supplier.

Page 7: [2] Deleted **Julie A. Gregory** **12/10/2002 2:28 PM**

2C.2.22 Variations From Rated Voltage and Rated Frequency. Unless specified otherwise, induction motors shall operate successfully under running conditions at rated load with a variation in the voltage or the frequency up to the following:

□Plus or minus 10 percent of rated voltage, with rated frequency.

□Plus or minus 5 percent of rated frequency with rated voltage.

□A combined variation in voltage and frequency of 10 percent (sum of absolute values) of the rated values, provided the frequency variation does not exceed plus or minus 5 percent of rated frequency.

2C.3 MOTOR EFFICIENCY CONTRACT PRICE ADJUSTMENTS. Any motor which upon test is found to have an efficiency value less than the values stated in the proposal data shall have the contract price reduced. The price reduction will be the difference between the guaranteed efficiency obtained from the values stated in the proposal data and the actual efficiency as determined from test values multiplied by the appropriate dollar values given in this section. The price reduction will be invoked for each motor of a given motor design based on the testing of one motor of that design.

Page 8: [3] Deleted **Julie A. Gregory** **12/10/2002 2:34 PM**

Type

Page 8: [3] Deleted	**Julie A. Gregory**	**12/10/2002 2:34 PM**
Calendar Days		
Page 8: [3] Deleted	**Julie A. Gregory**	**12/10/2002 2:34 PM**
	Event/Date	
Page 8: [3] Deleted	**Julie A. Gregory**	**12/10/2002 2:34 PM**
	Liquidated Damages Apply	
Page 8: [4] Deleted	**Julie A. Gregory**	**12/10/2002 2:34 PM**
	DOCS	
Page 8: [4] Deleted	**Julie A. Gregory**	**12/10/2002 2:34 PM**
60 After		
Page 8: [4] Deleted	**Julie A. Gregory**	**12/10/2002 2:34 PM**
	Contract Award	
Page 8: [4] Deleted	**Julie A. Gregory**	**12/10/2002 2:34 PM**
	⊟	
Page 8: [5] Deleted	**Julie A. Gregory**	**12/10/2002 2:34 PM**
	DOCS	
Page 8: [5] Deleted	**Julie A. Gregory**	**12/10/2002 2:34 PM**
60 After		
Page 8: [5] Deleted	**Julie A. Gregory**	**12/10/2002 2:34 PM**
	Contract Award	
Page 8: [5] Deleted	**Julie A. Gregory**	**12/10/2002 2:34 PM**
	⊟	
Page 8: [6] Deleted	**Julie A. Gregory**	**12/10/2002 2:34 PM**
	DOCS	

Page 8: [6] Deleted **Julie A. Gregory** **12/10/2002 2:34 PM**

60 After

Page 8: [6] Deleted **Julie A. Gregory** **12/10/2002 2:34 PM**

Contract Award

Page 8: [6] Deleted **Julie A. Gregory** **12/10/2002 2:34 PM**

Page 8: [7] Deleted **Julie A. Gregory** **12/10/2002 2:34 PM**

DOCS

Page 8: [7] Deleted **Julie A. Gregory** **12/10/2002 2:34 PM**

60 After

Page 8: [7] Deleted **Julie A. Gregory** **12/10/2002 2:34 PM**

Shipment

Page 8: [7] Deleted **Julie A. Gregory** **12/10/2002 2:34 PM**

Page 8: [8] Deleted **Julie A. Gregory** **12/10/2002 2:34 PM**

DOCS

Page 8: [8] Deleted **Julie A. Gregory** **12/10/2002 2:34 PM**

60 After

Page 8: [8] Deleted **Julie A. Gregory** **12/10/2002 2:34 PM**

Contract Award

Page 8: [8] Deleted **Julie A. Gregory** **12/10/2002 2:34 PM**

Page 8: [9] Deleted **Julie A. Gregory** **12/10/2002 2:35 PM**

Bearing disassembly and reassembly drawings

Page 8: [9] Deleted	**Julie A. Gregory** DOCS	**12/10/2002 2:34 PM**
Page 8: [9] Deleted With	**Julie A. Gregory**	**12/10/2002 2:34 PM**
Page 8: [9] Deleted	**Julie A. Gregory** Instruction Manual	**12/10/2002 2:34 PM**
Page 8: [9] Deleted	**Julie A. Gregory** ⊟	**12/10/2002 2:34 PM**
Page 8: [10] Deleted	**Julie A. Gregory** DOCS	**12/10/2002 2:34 PM**
Page 8: [10] Deleted 60 After	**Julie A. Gregory**	**12/10/2002 2:34 PM**
Page 8: [10] Deleted	**Julie A. Gregory** Contract Award	**12/10/2002 2:34 PM**
Page 8: [10] Deleted	**Julie A. Gregory** ⊟	**12/10/2002 2:34 PM**
Page 8: [11] Deleted	**Julie A. Gregory** DOCS	**12/10/2002 2:34 PM**
Page 8: [11] Deleted 60 After	**Julie A. Gregory**	**12/10/2002 2:34 PM**
Page 8: [11] Deleted	**Julie A. Gregory** Contract Award	**12/10/2002 2:34 PM**
Page 8: [11] Deleted	**Julie A. Gregory** ⊟	**12/10/2002 2:34 PM**

Page 8: [12] Deleted	**Julie A. Gregory**	**12/10/2002 2:35 PM**
Part of general submittals		

Page 8: [12] Deleted	**Julie A. Gregory**	**12/10/2002 2:34 PM**
	DOCS	

Page 8: [12] Deleted	**Julie A. Gregory**	**12/10/2002 2:34 PM**
60 After		

Page 8: [12] Deleted	**Julie A. Gregory**	**12/10/2002 2:34 PM**
	Contract Award	

Page 8: [12] Deleted	**Julie A. Gregory**	**12/10/2002 2:34 PM**
	⊟	

DRAWING LIST

The following reference drawings and pictures are included on the CD that is included with the specification.

Existing Design Drawings

Drawing Number	Rev	Title
9255-1APE-E1002	9	ONE-LINE DIAGRAMS OVERALL FUNCTIONAL RELAYING
9255-1APE-E1006	8	ONE-LINE DIAGRAMS 6900V UNIT SWITCHGEAR 1A2
9255-1APE-E1008	9	ONE-LINE DIAGRAMS 6900V UNIT SUBSTATION 1B2
9255-1BSB-M1040	13	PLANT ARRANGEMENT-AQCS CONTROL BLDG & ID FAN AREA GROUND FLOOR - EL 4676'-0"
9255-1BSB-M1041	9	PLANT ARRANGEMENT-AQCS CONTROL BLDG & ID FAN AREA MEZZANINE FLOOR - EL 4692'-0"
9255-2APE-E1002	4	ONE-LINE DIAGRAMS OVERALL FUNCTIONAL RELAYING
9255-2APE-E1006	5	ONE-LINE DIAGRAMS 6900V UNIT SWITCHGEAR 2A2
9255-2APE-E1008	5	ONE-LINE DIAGRAMS 6900V UNIT SUBSTATION 2B2
9255-2BSB-M1040	8	PLANT ARRANGEMENT-AQCS CONTROL BLDG & ID FAN AREA GROUND FLOOR - EL 4676'-0"
9255-2BSB-M1041	6	PLANT ARRANGEMENT-AQCS CONTROL BLDG & ID FAN AREA MEZZANINE FLOOR - EL 4692'-0"

IP7014302

Existing ID Fan Drawings

Drawing Number	Rev	Title
2090F87	7	CONTRACT DRAWING 4132 SPECIAL I.D. FAN CL. 954 ARR. 3 DW W/324" BOXES 60" TAU DISCH. CW&CCW ROTA.
2429D95	2	FAN FOUNDATION SYSTEM DESIGN CRITERIA CATEGORY IV FOR ADJUSTABLE SPEED DRIVE SYSTEMS

Existing Drive and Motor Drawings

The existing drive and motor drawings are included as files 00250001.tif through 00250156.tif.

Pictures

File Name	Description
Pb130002.jpg	Looking west at Unit 2 wall of AQCS Control Building
Pb130003.jpg	Looking west at Unit 2 wall of AQCS Control Building and ID Fan 1A
Pb130010.jpg	Looking west at Unit 1 wall of AQCS Control Building
Pb130012.jpg	Looking west at Unit 1 wall of AQCS Control Building and ID Fan 1A

IP7014303

SPECIFICATIONS
AND
DOCUMENTS

INTERMOUNTAIN POWER PROJECT

INTERMOUNTAIN GENERATING STATION
DELTA, UTAH

VARIABLE FREQUENCY
I. D. FAN DRIVES

SPECIFICATION 133101.63.2203.1

July 25, 2003

IP7014304

PART F - DIVISION F2

DETAILED SPECIFICATIONS - DETAILED REQUIREMENTS

INTERMOUNTAIN POWER PROJECT

DELTA, UTAH

INTERMOUNTAIN GENERATING STATION

SPECIFICATIONS AND DOCUMENTS
FOR
VARIABLE FREQUENCY
I. D. FAN DRIVES

SPECIFICATION 133101.63.2203.1

TABLE OF CONTENTS

		Page thru Page	
I.	BIDDING REQUIREMENTS		
	Proposal Data	PD-1	PD-6
II.	SPECIFICATIONS		
	Part 1 - GENERAL REQUIREMENTS		
	Section		
	1A - General Description and Scope of the Work	1A-1	1A-13
	1B - General Equipment Specifications	1B-1	1B-35
	1C - Engineering Data	1C-1	1C-11
	1Q - General Quality System Requirements	1Q-1	1Q-3
	1S - Seismic Design	1S-1	1S-6
	Part 2 - TECHNICAL REQUIREMENTS		
	Section		
	2A - Medium Voltage Variable Frequency Drives	2A-1	2A-27
	2B - VFD Isolation (VFDI) Transformers	2B-1	2B-11
	2C Medium Voltage Induction Motors	2C-1	2C-14
	Drawing List	1 page	

IP7014305

PROPOSAL DATA

PD.1 GENERAL. Bidder shall submit complete and definitive information on his offering in sufficient detail to permit a complete analysis of the Proposal. The requirements stated in the Instructions to Bidders relative to information submittal shall be followed.

The requirements for information contained in this section are basic requirements. Additional information shall be provided as requested by the Engineer.

The blank data sheets included in this section shall be completely filled in. The data listed therein shall not relieve the Contractor of his responsibility for meeting the requirements of the detailed specifications.

The bidder shall not alter the original Proposal Data section page numbers. If it becomes necessary to add pages, at other than the end of the section, a suffix such as a, b, c, etc., shall be added to the original number to designate the added page number. Pages added at the end of the section shall be numbered sequentially by continuation of originally established numbering.

The Proposal Data pages are included on a floppy disk for Contractor to use in submitting the data. The filled in disks will be used by the purchaser to prepare comparison spreadsheets for evaluation, therefore Contractor shall not modify the format.

Where alternates are indicated in the Proposal or Proposal Data, the bidder shall provide complete information for each alternate.

PD.2 DRAWINGS. Drawings shall be submitted with the Proposal in sufficient detail to permit evaluation of the equipment offered and to permit preliminary arrangement studies to be made:

> Plan view showing the proposed equipment in the existing electrical equipment room. Contractor shall also include estimated weights for all equipment. . Outdoor cooling equipment, if required, shall also be shown. External interconnection one-line diagram showing all power, control, and protection cabling required to complete the installation of the VFD system.
>
> Harmonic study.

PD.3 SUPPLEMENTARY INFORMATION. The following supplementary information shall be submitted with the Proposal:

IP7014306

Provide a complete description of proposed variable frequency drive. This shall include a description of shipping components and field assembly installation.

Summary description of codes and standards used if different than specified, including a review of major differences.

Identification of any modifications required to IPSC's ID fan system, composed of ID fan motor, ID fan, connecting shaft, bearings, and cable connecting the ID fan motor to the VFD system to allow this equipment to operate with the VFD while maintaining a normal 30 year lifetime of the ID fan system.

Documentation indicating the Contractor's VFD system does not produce torsional vibrations, shaft torsional resonance, or torque pulsations within the connecting shaft of the ID fan system.

Documentation indicating the Contractor's VFD system will not create accelerated ID fan system bearing wear due to common mode voltages delivered by high frequency PWM or other signals from the Contractor's inverter drive.

Documentation indicating the Contractor's VFD system does not contribute to insulation breakdown of the end turns of the motor winding.

Provide names and other contact information of five purchasers of the proposed VFD system applied to motors of 3,000 hp and above who have had the equipment installed and operating for at least 2 years.

Priced preliminary spare parts list.

Input current including harmonic content at 25, 50, 75, 85, and 100 percent load.

Provide composite data on mean time to failure and mean time to repair for typical components contained within the VFD system and shown by operating experience to fail or require replacement.

Provide a detailed description of the installation instructions of the proposed drive system including all of its components and any modifications to existing equipment.

Provide a description of the failure mode if control power is lost to the VFD control system.

IP7014307

Provide a description of VFD operation when the input voltage dips to 70%.

Provide a description of the failure modes of the power switching devices (SCR, GTO, diode, IGBT, IGCT, etc.) or switching device control that will allow the drive system to continue to operate without tripping the fan.

Provide a description of accelerating and decelerating torque programming capabilities and other pertinent capabilities and limitations.

Preliminary schedule.

Harmonic calculation.

Efficiency (at the input to VFD isolation transformer) graph with Y-axis indicating 25, 50, 75, 85, and 100 percent torque and X-axis indicating 25, 50, 75, 85, and 100 percent frequency.

Catalog brochures.

Complete list of required maintenance tools as discussed in Section 1B. The listing shall include a complete description and quantity of each item.

Information specified in the Instructions to Bidders.

Equipment storage requirements including inside or outside requirements, requirements for controlled temperature or humidity, etc.

Description of manufacturing, testing, and inspection procedures.

Written description, logic diagrams, or ladder diagram indicating recommended operating sequence.

Maintenance activities required by the manufacturer and/or by the Contractor to provide adequate storage and to maintain valid material and equipment warranties.

Motor Information if motor is furnished from Article 2C.8.

Transformer Information from Article 2B.

PD.4 EQUIPMENT AND MATERIAL DATA. The information required on the following pages is to assist the Engineer and IPSC in evaluating the Technical Proposal.

IP7014308

The data listed herein is stated for definitive purposes and for the convenience of IPSC and the Engineer.

Furnish a complete description of the proposed system indicating exactly what is being replaced and what is being reused.

Provide a drawing (the plant arrangement –AQCS control bldg Mezzanine drawing may be used) showing the proposed arrangement and dimensions including clearances between existing items and all new items. This drawing shall also indicate the approximate weight of all components.

Provide guaranteed reliability and maintainability times of the proposed system

Is any core drilling required if so how much?

Provide a description of the WORK required for complete replacement.

Provide a list of maintenance tools, which shall be furnished with the equipment.

Provide a description of the manufacturer's standard factory test procedure.

Provide the expected and maximum heat loss on a per drive bases.

Provide at least three sites and names of individuals that may be contacted where similar equipment has been retrofitted.

Verify that the minimum speed of 10% is acceptable to the motor vendor.

The VFD shall be suitable for continuous operation at turning gear speed for equipment cool-down. Provide information describing the operation at turning gear speed.

Provide a harmonic analysis, which includes all voltage and current harmonics up to the 49th.

Provide any alternate access options required.

Provide heat dissipation data necessary to verify existing HVAC systems or design new HVAC systems.

Provide a summary description of codes and standards used if different than specified including a review of major differences.

Provide a priced list of recommended spare parts.

List any special and maintenance tools being furnished.

IP7014309

Provide bidder experience record with proposed equipment

Provide a list of factory routine tests being proposed.

Provide a complete description of the extent of shop assembly of components, and what will not be shop assembled.

Provide efficiency versus load curves based on the driven equipment.

Provide a written description of the results of a failure of any power switching device (SCR, GTO, diode, IGBT, IGCT, etc.) or switching device control. Contractor shall include the sequence of each channel in the write-up.

Describe why rear or side access is needed.

Contractor shall confirm that all power components in the converter sections will be mounted on a swing frame or rack-out for ease of maintenance. If not describe alternate.

IP7014310

_____
(Bidder's Name)

VARIABLE FREQUENCY DRIVE SYSTEM

VFD isolation transformer rating (kVA) _____

System input voltage _____

System output voltage _____

Rated drive output power (continuous kVA) _____

Rated drive output current (continuous A) _____

Nominal load power (HP) _____

Rated VFD input current (A) _____

Nominal VFD input current at [redacted] output (A) _____

VARIABLE FREQUENCY DRIVE

Manufacturer and model ..... [_____]

Overall Dimensions:

Height ..... (in) [_____]

Depth ..... (in) [_____]

Width ..... (in) [_____]

Shipping height ..... (in) [_____]

Length of longest shipping piece ..... (in) [_____]

Technology ..... [_____]

Microprocessor-based multi-level switching ..... [_____]

Phase/frequency/voltage ..... (ph/Hz/V) [_____]

Rectifier device ..... [_____]

Inverter device ..... [_____]

IP7014311

_____
(Bidder's Name)

Cell voltage.....(V) [_____]

Number of cells..... [_____]

In the event of any power switching device (SCR, GTO, diode, IGBT, IGCT, etc.) failure, will the VFD continue to operate at full rated output? ..... (Yes/No) [_____]

If "No," explain ..... [_____]

Number of pulses..... [_____]

DC link capacitors ..... (Yes/No) [_____]

Input power factor (30% to 100% speed) .....(Cos f) [_____]

Power interrupt ride through duration.....(cycles) [_____]

Voltage dip (with continuous operation) .....(%) [_____]

VFD output voltage .....(V) [_____]

Overload capability for 60 seconds.....(%) [_____]

Torque pulsations across speed range.....(%) [_____]

Cooling medium ..... [_____]

Enclosure protection ..... [_____]

Ambient temperature maximum .....(°C) [_____]

Humidity (non-condensing).....(%) [_____]

Altitude ..... (feet) [_____]

DC LINK REACTOR DATA

Manufacturer..... [_____]

Class and type of core..... [_____]

Insulating liquid ..... [_____]

Quantity ..... [_____]

Nominal dc voltage rating.....(V) [_____]

Continuous dc current rating.....(A) [_____]

IP7014312

_____
(Bidder's Name)

Rated dc load .....(kW) [_____]

Conductor material of winding (if aluminum, state the grade)..... [_____]

Basic lighting impulse insulation level (BIL) ..... (kV) [_____]

Approximate resistance at 75°C.....(ohms) [_____]

Inductance.....(henrys) [_____]

Loses (guaranteed):

No-load loss (excitation only)

At 100% voltage .....(kW) [_____]

At 110% voltage .....(kW) [_____]

Total loss, no-load loss plus load loss, with full rated dc load(kW) [_____]

Temperature under continuous operation guaranteed:

Temperature rise at full-rated dc load

Winding temperature rise by resistance .....(°C) [_____]

Hottest spot winding temperature rise .....(°C) [_____]

Average sound level at rated dc load, Scale "A," slow response, at one foot from the reactor .....(db) [_____]

Short circuit capability:

DC short circuit current .....(A) [_____]

Maximum duration of short circuit current..... (sec.) [_____]

REACTOR WEIGHT AND DIMENSIONS

Net weights:

Core and coils ..... (lb.) [_____]

Insulating liquid ..... (lb./gal.) [_____]

Total.....(lb.) [_____]

Heaviest piece to handle during erection .....(lb.) [_____]

IP7014313

_____
(Bidder's Name)

Overall dimensions:

Height .....(in.) [_____]

Depth .....(in.) [_____]

Width .....(in.) [_____]

Shipping height.....(in.) [_____]

TUNED FILTER BANK

Is a tuned filter bank required for harmonic suppression ...(yes/no) [_____]

If yes, where is it mounted? (Include dimensions and weights)... [_____]

DRIVE COOLING SYSTEM

Manufacturer ..... [_____]

Cooling Methodology.....(liquid/air) [_____]

Type of liquid ..... [_____]

Is cooling system 100% redundant .....(yes/no) [_____]

Net weight..... [_____]

HARMONIC VOLTAGE DISTORTION

Guaranteed maximum harmonic voltage distortion contribution , without filters, to auxiliary electrical power system under the worst case conditions:

HARMONIC	90%	100%	110%
5	[_____]	[_____]	[_____]
7	[_____]	[_____]	[_____]
11	[_____]	[_____]	[_____]
13	[_____]	[_____]	[_____]
17	[_____]	[_____]	[_____]
19	[_____]	[_____]	[_____]
23	[_____]	[_____]	[_____]
25	[_____]	[_____]	[_____]
TOTAL	[_____]	[_____]	[_____]

IP7014314

_____
(Bidder's Name)

EFFICIENCY

Guaranteed overall system efficiency at rated speed and load ..... (%) [_____]

Total guaranteed system losses at rated speed and load .....(kW) [_____]

SYSTEM SPEED RESPONSE

Maximum deceleration rate .....(rpm/sec) [_____]

Maximum acceleration rate .....(rpm/sec) [_____]

INTERFACE

Type and quantity of communication ports which are included (i.e., RS232, RS485, USB, etc.) ..... [_____]

_____
BIDDER'S NAME AND TITLE (TYPED)

_____
SIGNATURE OF BIDDER

_____
DATE OF BID

_____
BIDDER'S TELEPHONE NUMBER

IP7014315

_____

(Bidder's Name)

IP7014316

PART 1 - GENERAL REQUIREMENTS

TABLE OF CONTENTS

		Page
Section 1A - GENERAL DESCRIPTION AND SCOPE OF THE WORK		1A-1 thru 1A-13
1A.1	General	1A-1
1A.2	Work Included Under These Specifications	1A-2
1A.3	Miscellaneous Materials and Services	1A-4
1A.4	Work Not Included Under These Specifications	1A-5
1A.5	Supplier's Services	1A-5
1A.6	Mill and Factory Witness Tests	1A-8
1A.7	Schedule	1A-8
Section 1B - GENERAL EQUIPMENT SPECIFICATIONS		1B-1 thru 1B-35
1B.1	General	1B-1
1B.2	Referenced Standards	1B-1
1B.3	Materials and Equipment	1B-1
1B.4	Identification	1B-1
1B.5	Preshipment Inspection	1B-1
1B.6	Materials List	1B-2
1B.7	Hazardous Materials	1B-2
1B.8	Correction of Errors	1B-2
1B.9	Numbering System	1B-2
1B.10	Nameplates	1B-2
1B.11	Factory Assembly	1B-3
1B.12	Consolidated Shipments	1B-3
1B.13	Packaging and Identification of Spare Parts	1B-3
1B.14	Special Shipping Requirements	1B-4
1B.15	Welding	1B-4
1B.16	Service Conditions	1B-4
1B.17	Shop Coating	1B-4
1B.18	Protection	1B-6
1B.19	Tools	1B-6
1B.20	Alignment and Balance	1B-7
1B.21	Noise Level	1B-7
1B.22	Design Coordination	1B-7
1B.23	Lubrication	1B-7
1B.24	Enclosed Gear Drive Units	1B-7

IP7014317

		Page
1B.25	Safety Guards	1B-8
1B.26	Shaft Couplings	1B-8
1B.27	Equipment Bases	1B-8
1B.28	Piping	1B-9
1B.29	Control Air Piping and Tubing	1B-9
1B.30	Instrument Primary Piping and/or Tubing	1B-10
1B.31	Instrument Valves	1B-12
1B.32	Compressed Air	1B-13
1B.33	Instrumentation	1B-13
1B.34	Control Power	1B-19
1B.35	Auxiliary Power	1B-20
1B.36	Raceway	1B-20
1B.37	Electrical Enclosures	1B-22
1B.38	Classification Identification of Electrical Equipment in Hazardous Areas	1B-23
1B.39	Wiring	1B-23
1B.40	Equipment Safety Grounding	1B-26
1B.41	Pin and Socket Connectors	1B-27
1B.42	Termination of 600 Volt Power Cable	1B-27
1B.43	Termination of Cables Rated Above 600 Volts	1B-28
1B.44	Terminal Blocks	1B-28
1B.45	Fuse Blocks	1B-29
1B.46	Fuses	1B-29
1B.47	Electrical Accessory Devices	1B-29
1B.48	Molded Case Circuit Breakers	1B-31
1B.49	Weatherproofing	1B-32
1B.50	Factory Prewired Electronic Systems Cabinets	1B-32
1B.51	Solid-State Logic Systems	1B-32
1B.52	Motor Control	1B-33
Typical Schematics for Combination Starters		1B-35
Section 1C - ENGINEERING DATA		1C-1 thru 1C-11
1C.1	General	1C-1
1C.2	Correspondence	1C-1
1C.3	Review of Engineering Data	1C-2
1C.4	Performance Curves	1C-2
1C.5	Design Data	1C-2
1C.6	Test and Inspection Data	1C-2
1C.7	Motor Information	1C-2
1C.8	Drawings	1C-2
1C.9	Wiring Diagrams	1C-4
1C.10	Instruction Manuals	1C-5
Motor Information Sheets		1C-9 thru 1C-11

IP7014318

		Page
Section 1Q - GENERAL QUALITY SYSTEM REQUIREMENTS		1Q-1 thru 1Q-3
1Q.1	Purpose/Scope	1Q-1
1Q.2	Quality System	1Q-1
1Q.3	Quality System Manual	1Q-2
1Q.4	Subcontractors	1Q-2
1Q.5	Inspections by Engineer	1Q-2
1Q.6	Receipt Inspection	1Q-3
Section 1S - SEISMIC DESIGN		1S-1 thru 1S-6
1S.1	General	1S-1
1S.2	Seismic Forces	1S-2
1S.3	Seismic Design	1S-2
1S.4	Documentation	1S-4
Site Meteorological and Seismic Data Sheet		1S-6

IP7014319

Section 1A - GENERAL DESCRIPTION AND SCOPE OF THE WORK

1A.1 GENERAL. This section covers the general description, scope of the work, and supplementary requirements for equipment, materials, and services included under these specifications.

The equipment and materials covered by these specifications will be incorporated in the Intermountain Power Project Induced Draft Fan (IDF) Variable Frequency Drive (VFD) Replacement Project.

The Intermountain Power Project site is located at 850 West Brush Wellman Road, Delta, Utah 84624.

It is desirable to provide the best suited and largest standard drive suitable for possible use at a later date due to unforeseen changes that may be required in the future.

Reuse of the existing fan and motor is desirable. If the motor is reused the Contractor shall verify and warrantee the existing motor is acceptable for use with the new system.

The existing output contactors and all power and control electronics shall be replaced. Contractor may replace or reuse any and all other items as is deemed appropriate, however contractor shall included in his proposal a complete description of the proposed system and what is being replaced and what is being reused.

Contractor shall include in his proposal a drawing showing the proposed arrangement and dimensions including clearances between existing items and all new items. This drawing shall also indicate the approximate weight of all components.

Existing System Description. The Intermountain Power Project (IPP) power plant consists of two 840 MW units. Intermountain Power Services Corporation (IPSC) is in the process of upgrading the units to 950 MW.

Each unit has four induced draft fans (IDF) rated 7415 hp at 954 rpm existing maximum speed limit. The motors are six phase synchronous, eight pole, 3876 volt machines. Each motor has two three-phase windings. Winding 1 is phase shifted 30 electrical degrees from Winding 2. The motor windings are not re-connectable to change the motor voltage. Each motor is controlled by a pair of current source, load commutated inverter (LCI) variable frequency drives (VFD). Each drive has an input transformer to connect the 3876 volt drive to the 6900 volt circuit breaker. The transformer pairs are connected delta-delta and delta-wye such that the 6900 volt bus sees harmonics associated with 12-pulse rectification at full load of the drives. The motors and drives are about 20 years old and were manufactured by Westinghouse. The drive controls are a combination of analog and digital technologies.

IP7014320

New System Requirements. The replacement equipment must include features that will fulfill the following needs/requirements:

- Harmonic content on the 6900 volt bus must meet IEEE 519.
- Power factor at the 6900 volt feed to each ID fan shall be 0.95 or better at full load. Contractor shall include in the proposal the power factor at 25, 50, 75, 85, and 100% loads.
- Existing fan capacities shall not be decreased.
- External controls and interlocks of the new equipment shall coordinate with the existing plant control system.
- New components proposed must not degrade rating or service life of existing components that are being re-used. Extend service life of ID fan system.
- Contractor shall include in the proposal the guaranteed reliability and maintainability of ID fan system. New equipment must fit in existing space.
- It is desirable to have the new equipment use the existing conduits that are encased in concrete to minimize the installation costs. If necessary, others will do core drilling of the concrete however, Contractor shall list all core drilling necessary in the proposal.
- Equipment for VFD's shall be replaced and checked out during a scheduled 24-calendar day outage. Contractor shall include in his proposal a description of the WORK required for complete replacement.

Long Range Goals. The replacement equipment shall have features that will provide or make provision for the following goals:

- Increased fan capacity to allow a 950 MW generating capacity with 3 fans operating with additional pollution control equipment added.
- Provide for future ID Fan increases using Contractors standard equipment.
- Replace existing transformers.

1A.2 WORK INCLUDED UNDER THESE SPECIFICATIONS. The work under these specifications shall include furnishing FOB at the Intermountain Power Project Units 1 and 2 site the medium voltage variable frequency drives, and providing miscellaneous materials and services complete as specified herein and in accordance with the Contract Agreement.

IP7014321

All equipment and materials required for complete medium voltage variable frequency drive systems shall be furnished, except as specified otherwise in these specifications. The equipment, materials, and services to be furnished shall include, but not necessarily be limited to, the following major items:

> The furnishing of all plant, labor, equipment, appliances, materials, software, training, and the performance of all operations in connection with the analysis or study, design, fabrication, testing, delivery, field setup, and field checkout of integrated medium voltage variable frequency drive (VFD) systems, to operate the ID fans. Each set shall be an engineered system composed of the existing input switchgear, a variable frequency drive, self-contained closed cycle cooling system, and output contactor with connections to an existing ID fan motor. Drive equipment shall be housed in the existing control building. Equipment and software furnished shall be suitable for powering IPSC's ID fan motors or new motors provided by the Contractor. The Contractor shall identify any modifications required to IPSC's ID fan system, composed of ID fan motor, ID fan, connecting shaft, bearings, and cable connecting the ID fan motor to the VFD system to allow this equipment to operate with the VFD and still maintain a normal lifetime of the ID fan system. The Contractor shall also provide services to coordinate the proper selection of IPSC's ID fan system and programming of the VFD software. This includes, but is not limited to, coordination of information transfer associated with IPSC's ID fan system, such as WK^2 of the fan, critical speeds, starting/running torque, and meetings with the new or existing fan motor supplier.

Each variable frequency drive system shall consist of all system components required to meet the performance, protection, safety, testing, and certification criteria of these specifications. These components may include incoming harmonic filter/power factor correction unit, input isolation transformer, VFD converter/DC-link/inverter, and output filter. The VFD system shall represent a fully integrated package. All material and labor necessary to interconnect any VFD system elements shall be included, even if shipped separately, except as specified otherwise herein. The minimum VFD size shall be such that the motor will operate continuously at the horsepower rating multiplied by the motor service factor.

It is intended that the Contractor's standard product, with available options, be provided under this specification. Any modifications to a standard product provided to meet this specification shall be performed by the Contractor only. The Contractor shall explicitly indicate all exceptions or deviations to this specification in his proposal where identified in the Proposal Section. Only exceptions or deviations identified in the Proposal Section will be considered for negotiation and possible inclusion in the conformed contract.

IP7014322

The main VFD system components shall be completely factory prewired, assembled, and then tested as a complete package by the Contractor, to assure a properly coordinated, fully integrated drive system. It is desirable that the factory acceptance tests include all components being furnished, including the transformer.

The Contractor shall conduct a certified startup of all Contractor-furnished equipment to confirm conformance to this specification.

Any third party certification, safety or protection requirements shall be applied to the VFD system as a whole. Certification or protection of system elements or individual components by themselves is not acceptable.

IPSC will test the equipment after erection to demonstrate its ability to operate under the specified conditions and fulfill the guarantees as set forth herein. If the tests indicate that the equipment fails to meet guaranteed performance, the Contractor shall make additional tests and modifications until the equipment performs as specified.

The Contractor shall provide drawings and other engineering data, manufacturer's field services, tools, instruction manuals, recommended spare parts list, and miscellaneous materials and services, and shall participate in design conferences, all as specified herein.

Equipment, materials, and accessories furnished shall be delivered to the Intermountain Power Project site where they will be received, unloaded, stored, and erected under separate Purchase Order. Deficiencies shall be sufficient cause to reject equipment. Unloading from carrier and storing will not constitute acceptance.

1A.3 MISCELLANEOUS MATERIALS AND SERVICES. Miscellaneous materials and services not otherwise specifically called for shall be furnished by the Contractor in accordance with the following:

All piping integral to or between any equipment furnished under these specifications, except as otherwise specified.

All necessary instrument, power and control wiring and raceways integral to any equipment furnished under these specifications. This shall include terminal blocks and internal wiring to these terminal blocks for equipment requiring external connection.

Coupling guards for all exposed shafts and couplings.

Leveling blocks, soleplates, thrust blocks, and matching blocks.

IP7014323

Erection drawings, prints, information, instructions, and other data for use by IPSC's erection subcontractor.

Detailed storage requirements and lubrication requirements (including frequencies) for use by IPSC's erection subcontractor.

The use of all special tools required for erection of the equipment, exclusive of the maintenance tools specified to be furnished under Section 1B. Erection tools shall remain the property of the Contractor and all shipping costs to and from the jobsite shall be at the Contractor's expense.

1A.4 WORK NOT INCLUDED UNDER THESE SPECIFICATIONS. Purchaser will furnish the following items of work:

ID fan system, composed of ID fan motor (if existing motor is used), ID fan, connecting shaft, bearings, and cable connecting the ID fan motor for each ID fan (if Contractor verifies existing cabling is acceptable). The connecting cable will be shielded 8 kV Type MV-90 single conductor medium voltage power cable. The WK^2 of the fan is 347,700 lb-ft^2. The fan is a variable torque load. High breakaway/starting torque is required.
One or two 6.9 kV incoming power feeds to each Contractor-furnished VFD system.

One 125 volt dc power feed to each Contractor-furnished VFD.

Control wiring from IPSC's plant control system to the VFD control system.

Supply and installation of power cables as required to interconnect the VFDs, isolation transformers, input circuit breakers, and ID fan motors.

Receiving, unloading, storing, and field erection of all equipment.

Foundations, foundation bolts, bolt sleeves, and equipment bases.

Grouting materials and the placing thereof.

Permanent electric wiring to connect equipment terminal boxes to the plant electrical system.

Lubricants and fuels for operation.

Solvents and cleaning materials.

IP7014324

Finish painting of all equipment except as specified herein.

Operating personnel for startup and tests.

1A.5 CONTRACTOR'S SERVICES. The services called for in WORK INCLUDED UNDER THESE SPECIFICATIONS shall be in accordance with the following.

1A.5.1 Submittal of Engineering Data. Drawings and other engineering data for the specified equipment and materials are vital to the design and subsequent construction of the entire project.

The Contractor will be required to submit drawings and engineering data in accordance with the schedule and requirements specified herein to assure compliance with the overall construction and operating schedule.

The Contractor shall allow a reasonable amount of time for mailing, processing, and Engineer's review of drawings and data in his engineering schedule and procurement/production/ shipping schedule.

1A.5.2 Manufacturer's Technical Services. The Contractor shall furnish the services of one or more manufacturer's technical service representatives. The service representatives shall be technically competent, factory trained, experienced in the installation and operation of the equipment, and authorized by the manufacturer to perform the work stipulated.

The manufacturer's technical service representatives shall furnish written certification to the Engineer that the equipment has been inspected and adjusted by them or under their direction and that it is ready for service, all of which shall be done before initial operation of the equipment.

The duties of manufacturer's technical service representatives may include, but may not be limited to, the following:

a. Providing technical advice to assist the erection supplier in installing the equipment.

b. Inspecting and testing the equipment after installation and directing any changes or adjustments required to assure proper operation.

c. Providing technical direction during startup and initial operation of the equipment.

d. Directing the correction of any design or manufacturing errors.

IP7014325

e. Instructing IPSC's personnel in the operation and maintenance of the equipment.

f. Providing services required as a condition to providing the warranties and guarantees specified.

For each variable frequency drive system, the lump sum prices stated in the Proposal shall include the recommended number of days of service and round trips to the site for the field service. The contractor shall include as a minimum 24 days per drive.The representatives, shall provide the services specified under Items (a), (b), (c), and (f) above.
When, in the judgment of the Engineer, field service representative's time is required under Item (d) above solely and expressly for the purpose of correcting design or manufacturing errors, no payment will be made, nor will the time spent at the site while correcting such errors apply toward the days of service or round trips specified for Items (a), (b), (c), and (f) above.

When additional field service representative's time is required by IPSC under Item (e) above, the per diem rates for service time plus the rate for each round trip will be paid in accordance with applicable adjustment prices for manufacturer's technical services as stated in the Proposal.

The per diem rates shall include all costs associated with the service representative's work at the site, including local travel, local travel time wages, and living expenses. The round trip rate shall include all expenses for travel to and from the manufacturer's facilities and IPSC's site, including any salary costs for travel time. IPSC will not reimburse Contractor for air fare costs exceeding tourist class air fare unless unusual circumstances exist. The Contractor shall notify the Engineer of such circumstances.

A day of service (per diem) is defined as 8 man-hours at the site. The total number of days of service shall be defined as the total regular time man-hours at the site divided by eight.

1A.5.3 Design Conference. The Contractor's design engineer shall attend one design conference as part of the kickoff meeting at a time and place selected by the Engineer to discuss matters relative to the execution of this Purchase Order.

1A.5.4 Instruction Manuals. Instruction manuals shall be furnished in accordance with the requirements stated in Section 1C of these specifications and as scheduled herein.

1A.5.5 Recommended Spare Parts. The Contractor shall provide a complete listing of recommended spare parts with unit prices FOB Intermountain Power Project site, not later than the date listed in the Schedule of Activities. The listing shall include the manufacturer of each part, a description of each part (including industry standard part number if available), the assembly or equipment in which each part will be used, and recommended quantities to

be stocked; shall classify the relative criticality of parts based on the manufacturer's experience; and shall list the lead time required for manufacture and delivery of each part.

IPSC will retain the option of purchasing any one or any combination of spare parts listed at the prices quoted until 6 months after final startup testing and acceptance.

1A.6 FACTORY WITNESS TESTS. Supplementing the provisions of Sections 2A, 2B, and 2C concerning factory witness tests, the Contractor shall notify the Engineer not less than 10 days prior to the date of each factory witness test. Purchaser and engineer have the right to witness the factory acceptance test and be present for all other tests conducted.

1A.7 SCHEDULE. The Contractor shall complete the specified activities in accordance with the milestone time periods and dates listed in addition to the timely delivery of the equipment and materials.

The Schedule of Activities included at the end of this article stipulates the milestone dates and time periods for the work included in this Purchase Order. It is necessary that the Contractor perform the activities shown on or before the dates indicated to avoid delay of the entire project.

1A.7.1 Activity Periods and Dates. The time periods and dates listed in the Schedule of Activities indicate the latest dates by which the listed activities shall be completed. Data, drawings, and lists for planning, engineering, and documentation may be submitted earlier than the indicated dates at the Contractor's option.

Equipment and materials shall be delivered within the time frame specified. IPSC will not be obligated to accept delivery or make payment for equipment delivered prior to the earliest acceptable delivery date.

1A.7.2 Engineering Schedule. The Contractor shall submit a schedule for engineering associated with the equipment being provided. Such schedules shall be updated and submitted by the first of each month until completion of the engineering effort.

1A.7.3 Procurement/Production/Shipping Schedule. The Contractor shall submit a detailed procurement/production/shipping schedule for the equipment and materials not later than the date indicated; thereafter, the schedule shall be updated as directed by the Engineer or Purchaser, but at least every 30 days.

1A.7.4 Reference Drawings. The following reference drawings are included with this specification:

See attached Drawing List.

IP7014327

The Contractor shall field verify the information shown on the referenced drawings for any information that is used in the design and fabrication of the variable frequency I.D. fan drive equipment. All travel and living expenses expended by the Contractor for field verification shall be included in the lump sum contract price.

IP7014328

1A.7.5 Schedule of Activities.

Activity	Days After Award of Purchase Order
Planning, Engineering & Documentation	
Contractor to participate in design conference	15
Contractor to deliver schedule of engineering to the Engineer	15
Contractor to deliver Quality System Manual to Engineer as specified in Section 1Q.	20
Contractor to deliver Inspection and Test Plan to Engineer as specified in Section 1Q.	30 days prior to first fabrication
Contractor to deliver Notification of tests/test/inspections to Engineer as specified in Section 1Q.	10 days prior to inspection
Contractor to deliver hazardous materials documentation to the Engineer	30 days after award of Purchase Order and with material lists
Contractor to deliver drawings to Engineer	
Outline drawings	15
Schematic and wiring diagrams	20
Input/Output list to plant control system	15

IP7014329

Activity	Days After Award of Purchase Order
Block diagram showing the basic control and protection systems specifying the protection, control, trip and alarm functions at the different locations, the reference signals and commands and the auxiliary supplies (i.e. air, oil, cooling water, electrical auxiliary supplies)	15
Electrical single-line diagram showing main and auxiliary circuitry, including main power input, switchgear, transformer, VFD, system earthing and auxiliary supplies - showing all CTs, PTs, relays, meters, etc., for the control, protection and operation of the drive system with electrical data (i.e. voltage, current, time ratings, impedances, and tolerances)	20
Equipment dimensions, including stub-up locations, shipping splits, and shipping weights	15
Nameplate drawings	15
Torsional analysis	20
Efficiency and power factor values	15
Startup and commissioning instructions and data	6 weeks prior to shipment

IP7014330

Activity	Days After Award of Purchase Order
VFD equipment interface information including dead, and seismic loads	20
Anchor bolt information including material, size, and projection	20
Certified report (including test data) for all system level tests	15 days after completion of system level tests
Schedule of system level tests including proposed test procedures	30 days prior to tests
Schedule of certified field startup and acceptance tests	30 days before shipment
Contractor to deliver completed Motor Information Sheets to Engineer	15
Contractor to deliver cash flow projection to Engineer	15
Contractor to deliver initial detailed procurement/production/shipping schedule to Engineer	15
Contractor to deliver recommended detailed erection sequence and procedure for Engineer review	20
Contractor to submit "Proof Copy" of Instruction Manual(s) to Engineer	30days prior to shipment

IP7014331

Activity	Days After Award of Purchase Order	
Contractor to distribute 12 copies each for Unit 1 and 2of accepted Instruction Manuals as designated by the Engineer	30 days prior to shipment	
Contractor to deliver recommended spare parts list to Engineer	30 days prior to shipment	
Contractor to notify Engineer for preshipment inspection	30 days prior to shipment	
Contractor to notify Engineer of factory witness test(s)	10 days prior to date of test(s)	
	Earliest Acceptable Delivery Date	Latest Acceptable Delivery Date
Contractor to deliver equipment to jobsite		
Unit 2 (1 fans)	January 2, 2004	February 20, 2004
Unit 1 (2 fans)	January 2, 2005	January 31, 2005
Unit 2 (3 fans)	January 2, 2006	January 31, 2006
Unit 1 (2 fans)	January 2, 2007	January 31, 2007
24 day plant outage for installation of equipment, final startup testing and acceptance.	Date (exact dates to be determined after contract award)	
Unit 2 (1 fans)	March, 2004	
Unit 1 (2 fans)	March, 2005	
Unit 2 (3 fans)	March, 2006	
Unit 1 (2 fans)	March, 2007	

IP7014332

Section 1B - GENERAL EQUIPMENT SPECIFICATIONS

1B.1 GENERAL. These General Equipment Specifications apply in general to all equipment and materials and are supplementary to the detailed specifications. If requirements specified herein are in conflict with requirements specified in the detailed specifications, the detailed specifications shall govern to the extent of such conflict.

The Proposal shall be based upon the use of equipment and materials complying fully with the requirements specified in this Section 1B. It is recognized that the Contractor may have standardized on the use of certain components, materials, processes, or procedures different than those specified herein. Alternates in addition to the base proposal on the basis of supplying the Contractor's standard components, materials, processes, or procedures will be considered. The alternate proposal shall clearly stipulate the alternate proposed, the specific exceptions to the specifications, and the price change applicable for supplying such alternate.

1B.2 REFERENCED STANDARDS. Reference to the standards of any technical society, organization, or association, or to the laws, ordinances, or codes of governmental authorities shall mean the latest standard, code, or specification adopted, published, and effective at the date of taking bids unless specifically stated otherwise in these specifications.

The specifications, codes, and standards referenced in these specifications (including addenda, amendments, and errata) shall govern in all cases where references thereto are made except where they conflict with these specifications. In case of conflict between the referenced specifications, codes, or standards and these specifications, the latter shall govern to the extent of such difference.

1B.3 MATERIALS AND EQUIPMENT. Unless specifically provided otherwise in each case, all materials and equipment furnished for permanent installation in the work shall conform to applicable standard specifications and shall be new, unused, and undamaged.

1B.4 IDENTIFICATION. All correspondence, shipping notices, specifications, engineering data, and other documents pertaining to the equipment and materials furnished under these specifications shall be identified by IPSC's name, the project name, the unit number, the specification number, and the Engineer's project number.

1B.5 PRESHIPMENT INSPECTION. IPSC and Engineer reserve the right to inspect the equipment prior to shipment.

The Contractor shall notify the Engineer of all shipments not less than 10 days prior to the date of shipment to allow IPSC and Engineer to inspect the equipment if so desired.

IP7014333

1B.6 MATERIALS LIST. The Contractor shall prepare and submit with the first shipping notice two copies of an itemized materials list covering all material and equipment furnished under these specifications. The materials list shall be in sufficient detail to permit an accurate determination of the completion of shipment.

1B.7 HAZARDOUS MATERIALS. All shipments of hazardous materials shall be identified on the materials list. A copy of the hazardous materials documentation required by the article entitled MATERIAL SAFETY DATA SHEETS in the Detailed Specifications - Special Conditions shall be included with the materials list and shall also be included with the shipping papers attached to the shipment.

1B.8 CORRECTION OF ERRORS. Equipment and materials shall be complete in all respects within the limits herein outlined. All errors or omissions required to be corrected in the field shall be done by the manufacturer or his duly authorized representative at the Contractor's expense.

1B.9 NUMBERING SYSTEM. IPSC has established an identification numbering system to provide consistent numbering of all plant equipment. All electrical devices, control and instrumentation equipment, valves, and other items of similar nature shall be permanently identified with the identification number supplied by IPSC. Except as specified otherwise in these specifications, the identification shall be engraved on stainless steel tags, laminated phenolic tags, nameplates, or an equally permanent method at the option of, and as acceptable to, IPSC and shall be permanently affixed to the device. IPSC's identification numbers shall also be included on the manufacturer's drawings.

1B.10 NAMEPLATES. Nameplates shall be furnished for all equipment when specified in the detailed specification sections.

Nameplates shall be laminated white phenolic engraving stock with black core, or 2 ply vinyl white with reverse engraved black fill as manufactured by B. F. Plastics of Lawrence, Ohio, or acceptable equal. The lettering shall not be less than 3/16 inch high. As space permits, nameplates shall have an overall minimum size of 3/4 inch by 3 inches for small equipment nameplates, and 2 inches by 8 inches minimum for major equipment nameplates. The nameplate size shall be subject to acceptance by the Engineer during drawing review.

Nameplates shall be attached with stainless steel screws

1B.11 FACTORY ASSEMBLY. Equipment shall be shipped completely factory assembled, except when the physical size, arrangement or configuration of the equipment, or shipping and handling limitations make the shipment of completely assembled equipment impracticable, in which case the equipment shall be assembled and shipped as stated in the Contractor's proposal.

IP7014334

All separately packaged accessory items and parts shall be shipped with the equipment. Containers for separately packaged items shall be marked so that they are identified with the main equipment. An itemized packing slip, indicating what is in that container only, shall be attached to the outside of each container used for packaging. A similar list shall be inside of each container. A master packing slip, covering all accessory items for a given piece of equipment which are shipped in separate containers, shall be attached to one container.

Each box shall be marked with the large painted legend as follows:

INTERMOUNTAIN POWER SERVICE CORPORATION
INTERMOUNTAIN POWER PROJECT
SPARE PARTS FOR __(Name of Equipment)__
ERECTION SUPPLIER DO NOT OPEN EXCEPT WITH
IPSC'S PERMISSION

A weatherproofed itemized list of the contents shall be attached to the outside of each box. A similar list shall be inside each box.

1B.16 SERVICE CONDITIONS. Unless specified otherwise, equipment and material furnished under these specifications shall be suitable for service at an altitude of 4700 feet above sea level, temperatures between -35° C and 50° C.

Equipment located outdoors shall also be suitable for exposure to solar radiation, fog, rain, snow, ice, coal dust, fly ash, wind, and windblown dust and sand.

1B.17.1 Control and Electrical Equipment. Control and electrical equipment, including panels, cabinets, switchgear, transformers, and motors, shall be finish painted. Exterior surfaces shall be the manufacturer's standard color. The interior portions of cabinets shall be gloss white.

Touchup paint shall be provided for repair painting.

1B.18 PROTECTION. All equipment shall be boxed, crated, or otherwise suitably protected during shipment, handling, and storage

IP7014335

Electrical equipment, controls, and insulations shall be protected against moisture and water damage.

1B.19 TOOLS. The Contractor shall furnish and ship with each piece of equipment one set of all special tools required for dismantling and maintenance of the equipment.

Maintenance tools for each piece of equipment shall be boxed separately and the boxes shall be marked with the large painted legend as follows:

> INTERMOUNTAIN POWER SERVICE CORPORATION
> INTERMOUNTAIN POWER PROJECT
> MAINTENANCE TOOLS FOR ____(Name of Equipment)_____
> ERECTION SUPPLIER DO NOT OPEN EXCEPT WITH
> IPSC'S PERMISSION

A weatherproofed itemized list of the contents shall also be attached to the outside of each box.

The maintenance tools shall include all special handling rigs, bars, slings, and cable. All maintenance tools shall be in new and unused condition and shall become the property of IPSC. The bidder's proposal shall include the list of maintenance tools which shall be furnished with the equipment.

In addition to the tools for maintenance and dismantling, the Contractor shall furnish the use of all special tools required for erection of the equipment. Erection tools shall remain the property of the Contractor and all shipping costs to and from the jobsite shall be at the Contractor's expense. Erection tools for each piece of equipment shall be boxed separately. Erection tools shall not be boxed with maintenance tools.

1B.20 ALIGNMENT AND BALANCE. All rotating parts shall be true and dynamically balanced. Excessive noise or vibration, in the opinion of the Engineer or IPSC, will be sufficient cause for rejection of the equipment. All rotating equipment shall be balanced at the factory.

1B.21 NOISE LEVEL. The equivalent "A" weighted sound pressure level for equipment furnished under these specifications (excluding drive motors) shall not exceed 85 dBA free field measured 3 feet horizontally from the base of the equipment and 5 feet above floor level. If the drive motors for the equipment are also furnished under these specifications, the combined sound pressure level of the motor and driven equipment shall not exceed 90 dBA free field. The sound pressure levels stated are decibels to a reference of 20 micropascals.

1B.22 DESIGN COORDINATION. The Contractor shall be responsible for the selection and design of all equipment and materials which will provide the best coordinated performance of the entire system. Components of rotating equipment shall be selected so

IP7014336

that the natural frequency of the complete unit is not at or critically near the operating range of the unit.

IP7014337

1B.34 CONTROL POWER. Electrical power for control and instrumentation will be a nominal 120 volt, single-phase, 60 hertz, alternating current, or a nominal 125 volt direct current. The Contractor shall provide any devices required for proper operation and protection of the equipment during electrical power supply and ambient temperature fluctuations described in the following paragraphs.

All dc electrical control devices shall be designed for continuous operation on an ungrounded station battery at any voltage from 100 to 140 volts dc. Electrical devices served from this supply shall not impose any ground connections on it.

All ac electrical control devices shall, unless otherwise specified, be designed for continuous operation at any voltage from 102 to 132 volts alternating current. The dropout voltage shall be less than 75 volts for relays and 90 volts for contactors and starters. Alternating current electrical control devices operating at nominal voltages other than 120 volts shall be designed for continuous operation over proportional voltage variations.

All devices shall be guaranteed to operate satisfactorily under voltage conditions specified in the above paragraphs and at a range of ambient temperatures from 50° C to -35° C outdoors and from 50° C to -10° C indoors.

1B.35 AUXILIARY POWER. Auxiliary equipment, such as motors, transformers, and rectifiers, requiring electrical power shall be designed to operate from one of the nominal electrical power sources as follows:

Volts	Phase	Hertz
6900	3	60
480	3	60
208	3	60
120	1	60
125	dc	-- (Emergency)

Alternating current motor voltage ratings with relation to horsepower shall be in accordance with the following:

Horsepower	Volts	Phase
Below 1/2	115	1
1/2 thru 249	460	3

IP7014338

1B.37.1 Electrical Enclosure Heating. Where electrical enclosure heating is specified, at least two space heaters, one adjustable thermostat, and one fuse and fuse block shall be provided completely wired in the enclosure. The space heaters, thermostat, and fuse block shall not interfere with normal cable entrance into the enclosure or with maintenance or replacement of devices within the enclosure. Normal use of space heaters shall not change or discolor any painted surface.

Space heater capacity shall be as required to maintain the enclosure internal temperature above the dew point under the specified service conditions.

Space heater voltage rating shall be 240 volts. Voltage applied to space heaters shall be 120 volts.

Space heaters shall be controlled by an adjustable thermostat, factory set to close on falling temperature at 80° F (on) and open on rising temperature at 95° F (off). The thermostat shall incorporate an indicating thermometer and set point temperature indication.

Any thermally controlled devices within the enclosure shall be temperature compensated for correct operation at 85° F and above.

Space heater leads shall be stranded copper cable with 600 volt insulation and shall include terminal connectors. Space heater sheaths shall be of a corrosion-resistant, nonoxidizing material and shall have a thickness not less than 0.025 inch.

1B.39 WIRING. In general, all devices furnished under these specifications and requiring electrical connections shall be designed for wiring into electrical enclosures with terminal blocks. Terminal blocks shall be furnished for conductors requiring connection to circuits external to the specified equipment, for internal circuits crossing shipping splits, and where equipment parts replacement and maintenance will be facilitated.

Splices will not be permitted.

One spare normally open and one spare normally closed contact on each control switch and lockout relay shall be wired out to terminal blocks.

All wiring leaving an enclosure shall leave from terminal blocks and not from other devices in the enclosure.

Auxiliary equipment such as terminal blocks, auxiliary relays, or contactors shall be readily accessible. Auxiliary equipment shall be located in compartments, enclosures, or junction boxes in such arrangement that a serviceman will have direct access to the equipment without removal of barriers, cover plates, or wiring.

IP7014339

Terminal blocks for external connections shall be grouped in the instrument and control compartment for easy accessibility, unrestricted by interference from structural members and instruments. Sufficient space shall be provided on each side of each terminal block to allow an orderly arrangement of all leads to be terminated on the block.

Terminal blocks shall not be mounted in compartments containing cables or buses operating at voltages above 600 volts.

A shorting type terminal block shall be installed at an accessible location for each set of current transformers supplied with the equipment furnished under these specifications. The shorting terminal block shall be the one nearest the current transformers. No other shorting type terminal blocks are required unless specified otherwise. The shorting terminal blocks shall be furnished with white marking strips.

All electrical cables shall be conservatively selected for the electrical and environmental conditions of the installations and shall be of the best construction for the service where unusual service conditions are encountered. Proper temperature application cable shall be used throughout. Except where required to be otherwise to perform satisfactorily in the service, or unless otherwise specified in the detailed specifications, all electrical power and control conductors shall be Class B, stranded copper conductors, 14 AWG or larger.

Electrical cables which utilize mineral insulation (NEC Type MI) or polyvinyl chloride (PVC) insulation (NEC Types AWM, MTW, TA, TBS, THHN, THHW, THWN, TW, or THW) shall not be utilized. PVC shall not be utilized as a jacketing material on any of the cable constructions.

Control panel and cabinet wiring shall utilize stranded copper conductors with flame retardant cross-linked polyethylene or flame retardant ethylene-propylene rubber insulation rated 600 volts and shall meet the requirements of UL 44 for Types SIS and XHHW. The cables shall also meet the UL 44 VW-1 flame test and shall be Rockbestos Type SIS, VW-1; American Insulated Wire Type SIS, VW-1; Continental Wire & Cable Type SIS, VW-1; or acceptable equal.

Preinsulated terminal connectors shall include a vinyl sleeve, color coded to indicate conductor size. Preinsulated terminal connectors shall include a metallic support sleeve bonded to the vinyl insulating sleeve and designed to grip the conductor insulation.

IP7014340

Ring type connectors shall be manufactured by AMP, 3M, or acceptable equal. Spade type connectors shall be AMP slotted spring spade or 3M Scotchlok Series 61 snap spade terminal connectors.

Each terminal block, terminal, conductor, relay, breaker, fuse block, and other auxiliary device shall be permanently labeled to coincide with the identification indicated on the drawings. All terminals provided for termination of external circuits shall be identified by inscribing circuit designations acceptable to the Engineer on the terminal block marking strips with permanent black ink. All other wiring terminations shall be identified by printing on conductor identification sleeves. A conductor identification sleeve shall be provided on each end of each internal conductor. Each sleeve shall be marked with the opposite end destination identification described in Section 1C under WIRING DIAGRAMS. Conductor identification sleeves shall be polyvinyl chloride (PVC), not less than 1/2 inch long, and shall be as manufactured by W. H. Brady Company, Milwaukee, Wisconsin, or acceptable equal. Conductor identification shall be printed on the sleeve with permanent black ink acceptable to the Engineer. After inscription of the conductor identification, the sleeve shall be coated as required to prevent smudging. Conductor identification shall be permanent, unaffected by age, heat, solvents, or steam, and not easily dislodged. Adhesive labels are not acceptable.

The arrangement of connections on terminal blocks shall be acceptable to the Engineer.

All connections requiring disconnect plug and receptacle type devices shall be provided with factory terminated conductors on each plug and receptacle. Plugs and receptacles shall be factory wired into junction boxes containing terminal blocks for external connections. All conductors on the disconnect portion of plug-receptacle assemblies shall be in a common jacket.

All temporary wiring installed in the factory for equipment testing shall be removed prior to shipment of the equipment.

1B.40 EQUIPMENT SAFETY GROUNDING. All electrical equipment that is part of an integral shipping unit or assembly shall be furnished with bare copper grounding conductor extending to a central ground connection lug. The lug shall be suitable for field connection to the station ground grid by others.

Isolated logic system or single-point ground connections required for proper operation of electronic equipment shall be insulated from the equipment safety ground. Such connections shall be extended, using insulated cable, to a single termination point suitable for field connection to the appropriate ground system by others.

Electrical equipment shall include all enclosures containing electrical connections or bare conductors with the exception of control devices, such as solenoids, pressure switches, and limit switches, unless such devices require grounding for proper operation.

IP7014341

1B.44 TERMINAL BLOCKS. Terminal blocks shall be furnished with white marking strips and, where permitted by the safety codes and standards, shall be without covers. 20 % spare terminals shall be furnished.
All terminal blocks, except internal terminal blocks in factory prewired electronic systems cabinets and terminal blocks for thermocouple extension wire, shall be rated 600 volts minimum and shall have strap screw terminals. Terminal blocks for 10 AWG and smaller 600 volt insulated conductors shall be Marathon 1500 Series or acceptable equal. Terminal blocks for thermocouple extension wire shall be Buchanan Medium Duty with thermocouple contacts, or Marathon 200 Series with Omega Engineering Inc., Type TL terminal lugs for terminal blocks, or acceptable equal. Terminal blocks shall be appropriately sized for larger wire size or higher voltage insulated incoming conductors as necessary.

1B.47.6 Indicating Lights. Status indicating lights shall be either Micro Switch Type PTW, with Type 387 lamps, plastic lenses, and appropriately sized resistors; General Electric Type ET-16, with incandescent screw connectors, plastic lenses, and appropriately sized resistors; or acceptable equal.

Engraved indicating lights shall be Honeywell Micro Switch Series 2 with Type 387 lamps or acceptable equal.

Indicating light lens colors shall be coordinated with indicated conditions as specified in the following table. Indicating lights shall be energized when the condition exists and shall be de-energized when the condition does not exist:

Lens Color	Condition
Red	Equipment energized, such as motor running, valve open, or breaker closed.
Green	Equipment de-energized, such as motor stopped, valve closed, or breaker open.
White	Equipment abnormality, such as motor trip or breaker trip.
Amber or yellow	Equipment start permissive.

IP7014342

1B.47.7 Alarm Contacts. Alarm contacts for remote annunciation shall be suitable for operation at 125 volts dc. All contacts shall be rated at least 0.5 ampere make or break, at 125 volts dc.

Alarm contacts shall be normally closed contacts which open to alarm condition.

1B.48 MOLDED CASE CIRCUIT BREAKERS.

Molded case circuit breakers used in equipment furnished under these specifications shall be as listed in the following tables:

AC SERVICE

				Interrupting Capacity (NEMA)			
				AC		DC	
Poles	Service Volts ac	Frame Rating amperes	Trip Range amperes	Symmetrical Amperes	Volts	Amperes	Volts
1	120	100	15 - 100	10,000	120	5,000	125
2	208	100	15 - 100	10,000	240	5,000	250
2	480	100	15 - 100	25,000	480	10,000	250
3	208	100	15 - 100	10,000	240	*	*
3	480	100	15 - 100	25,000	480	*	*
2	480	225		25,000	480	10,000	250
3	480	225		25,000	480	*	*

*The construction of all 3-pole circuit breakers furnished under these specifications shall be equivalent to the single-pole and 2-pole circuit breakers specified. This shall include heavy-duty construction and spacing between poles as required for dc rated circuit breakers.

IP7014343

DC SERVICE

Poles	Service Volts dc	Frame Rating amperes	Trip Range amperes	Interrupting Capacity (NEMA) AC Symmetrical Amperes	AC Volts	DC Amperes	DC Volts
2	125	100	15 - 100	10,000	120	5,000	125

1B.50 FACTORY PREWIRED ELECTRONIC SYSTEMS CABINETS. Internal wiring in factory prewired electronic systems cabinets may be installed according to the Contractor's standard as to wire size, insulation, and method of termination on internal equipment except that insulation for all wiring (including circuit board wiring, back plane wiring, and power supply wiring) shall meet the VW-1 (vertical wire) flame test requirements of UL 44. Interconnecting cables between devices shall meet the flame test requirements of IEEE Standard 383 (ANSI N41.10) using a gas burner flame source. The individual conductors of the interconnecting cables shall meet the flame resisting test requirements of ICEA S-19-81, Paragraph 6.19.6. Identification of conductors may be done by insulation color coding identified on drawings or by printed wiring lists. Terminal blocks for connection of external circuits into factory prewired electronic systems cabinets shall meet all the requirements of the article TERMINAL BLOCKS in this section.

1B.51 SOLID-STATE LOGIC SYSTEMS. All electrical equipment containing solid-state logic systems shall be tested in accordance with the manufacturer's standard tests for a minimum of 120 hours under power prior to shipment from the factory. The components to be tested shall include the electronic devices, power supplies, input-output devices, operator interface devices, and interconnecting cables provided with the system. The system shall be tested as a complete assembly. Testing of individual components or modules will not be acceptable as system tests. Testing should be done at max operating temperature. All solid state boards should under go a burn in phase prior to any actual tests.

A description of the manufacturer's standard factory test procedure shall be provided in the proposal.

IP7014344

1B.52.1 Contractor-Furnished AC Motor Starters. The ac motor starters furnished with the equipment shall provide wiring in accordance with the Typical Schematics for Combination Starters following this section and in addition shall conform to the requirements which follow.

Motor starters for 480 volt ac service shall include 480 volt, 3-phase, 60 hertz contactors with manual reset thermal overload relays, 120 volt ac operating coils, and 480 to 120 volt dry type control transformers complete with one secondary lead fused and the other secondary lead grounded.

Auxiliary contacts shall be mechanically operated by the starter contactor. The quantity of contacts shall be as required, but not less than the quantity indicated on the Typical Schematics for Combination Starters. Terminal blocks shall be furnished as indicated on the Typical Schematics for Combination Starters.

Control transformers shall have 60 hertz ac ratings permitting operation at a primary voltage from 440 to 480 volts at a voltage ratio of 4:1. Assuming 440 volts on the primary terminals, each control transformer shall maintain a potential of not less than 105 volts at its secondary terminals during starter coil inrush, while simultaneously serving an additional load of 100 volt-amperes at 50 percent power factor.

Starters for 120 volt or 240 volt ac service shall be similar to 480 volt starters except control transformers will not be required.

IP7014345

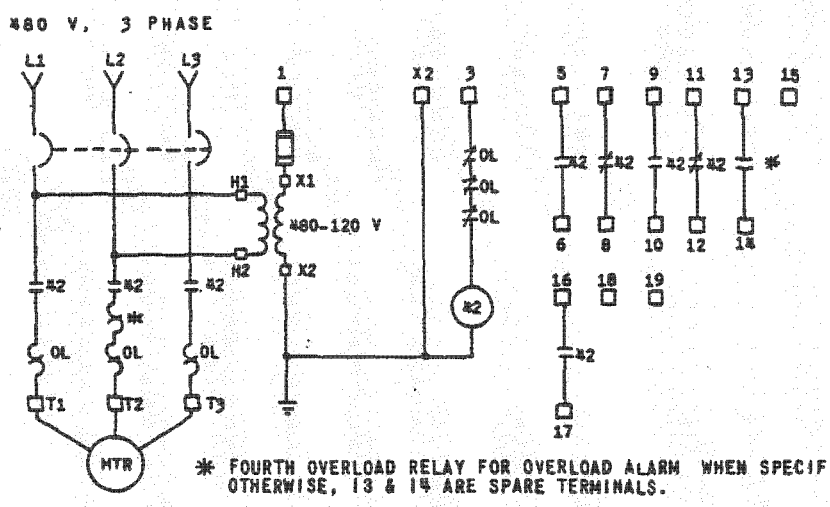

* FOURTH OVERLOAD RELAY FOR OVERLOAD ALARM WHEN SPECIFIED. OTHERWISE, 13 & 14 ARE SPARE TERMINALS.

WIRING DIAGRAM COMBINATION FULL VOLTAGE NON-REVERSING STARTER
NOTE: THIS DOES NOT APPLY TO SIZE 5 AND LARGER

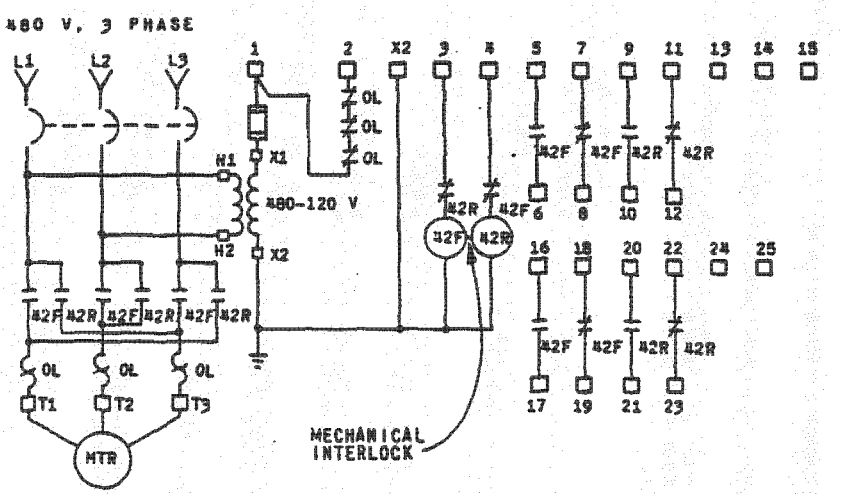

WIRING DIAGRAM COMBINATION FULL VOLTAGE REVERSING STARTER
NOTE: THIS DOES NOT APPLY TO SIZE 5 AND LARGER

P-EL-056-1

BLACK & VEATCH
CONSULTING ENGINEERS

PROJECT _____
SPEC _____

TYPICAL SCHEMATICS
FOR COMBINATION STARTERS

IP7014346

Section 1C - ENGINEERING DATA

1C.1 GENERAL. This section stipulates the requirements for engineering data which the Contractor shall submit to IPSC for design information and review. Compliance with the specified schedule for engineering data submittal is vital to the scheduled progress and completion of the project.

All engineering data shall be identified with the equipment or structure it represents by use of the nomenclature established by the purchase order documents. Equipment drawings shall have the engineer's equipment name and number clearly displayed. Material drawings shall have the engineer's structure name and structure number (when applicable) clearly displayed.

1C.1.1 Document Index. A document index listing all drawings and data to be submitted shall be included with the initial submittal. The document index shall be resubmitted as required to indicate revisions to the list. The list shall include the document number and title, if known, or the general document category, e.g., wiring diagrams for each item of equipment.

1C.2 CORRESPONDENCE. Correspondence, drawings, and data shall be addressed to the ENGINEER and the Owner as follows:

Original to IPSC:

Intermountain Power Project
850 West Brush Wellman Road
Delta, Utah 84624

Attention: Jon Christensen

Copy to ENGINEER:

Later

Letters of transmittal shall accompany all submittals of engineering data and shall include a list of the data included in the transmittal. Lists shall include manufacturer's drawing numbers identified with the corresponding project equipment or structure nomenclature as applicable. All correspondence shall be identified with the project name, specification number, engineer's project number, and manufacturer's order number.

1C.3 REVIEW OF ENGINEERING DATA. IPSC's review of engineering data will cover only general conformity of the data to the specifications and documents, external connections, interfaces with equipment and materials furnished under separate specifications, and dimensions which affect plant arrangements. The IPSC's review does not indicate a

IP7014347

thorough review of all dimensions, quantities, and details of the equipment, material, device, or item indicated or the accuracy of the information submitted; nor shall review by the IPSC be construed as relieving the Contractor from any responsibility for errors or deviations from the requirements of the purchase order documents.

All engineering data submitted, after final processing by the IPSC shall become a part of the purchase order documents and the work indicated or described thereby shall be performed in conformity therewith, unless otherwise required by IPSC.

1C.4 PERFORMANCE CURVES. If applicable, six copies of the performance curves shall be submitted as scheduled in Section 1A.

1C.5 DESIGN DATA. If applicable, six copies of the design data shall be submitted as scheduled in Section 1A.

1C.6 TEST AND INSPECTION DATA. Certified copies of test and inspection reports shall be provided by the Contractor for all tests and inspections conducted on the specified equipment. Six copies of each report shall be submitted to IPSC within 2 weeks after completion of each test or inspection.

1C.7 MOTOR INFORMATION. Motor Information Sheets are included at the end of this section. If applicable, a copy of the appropriate sheets shall be completed for each motor furnished under these specifications. Copies of the completed sheets shall be submitted as specified in this section and as scheduled in Section 1A. The number of copies submitted shall be the same as for other manufacturer's drawings.

1C.8 DRAWINGS. Drawings shall be in sufficient detail to indicate the kind, size, arrangement, weights of each component, breakdown for shipment, and operation of component materials and devices; the external connections, anchorages, and supports required; the dimensions needed for installation and correlation with other materials and equipment; and the information specifically requested in the drawing submittal schedule specified in Section 1A.

Drawings shall be fully completed and certified by the Contractor as to the compliance of the information contained thereon with the requirements of these specifications. Drawings shall have title block entries clearly indicating the drawing is certified. Drawings will be reviewed by the ENGINEER and processed as specified in this Section 1C.

Each drawing submitted shall be clearly marked with the name of the project, the unit designation, the specification title, the specification number, the project equipment or structure nomenclature, the Contractor's name, and IPSC's drawing number (after it is assigned upon initial submittal of the drawing). Catalog pages are not acceptable. If standard drawings are submitted, the applicable equipment and devices furnished shall be clearly marked. Separate drawings shall be submitted for each of the two units.

IP7014348

Drawings shall be submitted in accordance with the schedule specified in Section 1A.

1C.8.1 Drawing Submittal. Six prints of each drawing shall be submitted. Prints shall be black line on white background. Print size shall not exceed 34 inches by 44 inches unless due to the size of the equipment larger drawings are necessary. Drawings shall be folded to 8-1/2 inches by 11 inches. One copy of each drawings shall be submitted in AutoCAD dwg file format.

Drawing and lettering practices shall be in general accordance with the requirements of US Department of Defense, Military Standards - Engineering Drawing Practices, DOD-STD-100C.

1C.8.2 Drawing Processing. A copy of each drawing reviewed will be returned to the Contractor as stipulated herein. Copies of drawings returned to the Contractor will be in the form of a print with IPSC's marking.

When drawings and data are returned marked EXCEPTIONS NOTED, the changes shall be made as noted thereon, and six corrected copies shall be submitted to IPSC.

When the drawings and data are returned marked RETURNED FOR CORRECTION, the corrections shall be made as noted thereon and as instructed by IPSC and six corrected copies shall be submitted.

When a drawing is revised and resubmitted, the Contractor shall include an issue number and revision description in the drawing revision block. All revisions pertaining to that particular drawing issue shall be clouded or otherwise clearly noted on the drawing.

When the drawings are returned marked NO EXCEPTIONS NOTED or RECEIVED FOR DISTRIBUTION, the Contractor shall submit drawings for final distribution as specified hereinafter under Final Drawings. Drawings marked RECEIVED FOR DISTRIBUTION have been filed, but have not been reviewed.

No work shall be performed in connection with the fabrication or manufacture of equipment and materials until the drawings and data therefor have been reviewed by IPSC except at the Contractor's own risk and responsibility. Work may proceed on equipment and materials when the drawings and data therefor have been returned marked NO EXCEPTIONS NOTED or RECEIVED FOR DISTRIBUTION, and when drawings have been returned marked EXCEPTIONS NOTED, provided the work is performed in accordance with IPSC's notations.

If changes are made to the equipment at the project site, revised drawings indicating the changes made shall be prepared by the Contractor and submitted to IPSC.

IP7014349

1C.8.3 Final Drawings. Upon receipt from IPSC of drawings marked NO EXCEPTIONS NOTED or RECEIVED FOR DISTRIBUTION, the Contractor shall transmit seven additional prints of each drawing to the IPSC for final distribution. However, if during the submittal process, the Contractor makes further changes to drawings that have been reviewed by IPSC, the changes shall be clearly marked on the drawings and the submittal process shall be repeated.

1C.8.4 Electronic file copies. One electronic copy, in AutoCAD dwg file format, of each final electrical wiring and elementary diagram for equipment shall be furnished. Electronic copies shall be submitted to IPSC on archival quality compact discs.

1C.9 WIRING DIAGRAMS. Connection and interconnection wiring diagrams furnished by the Contractor shall be as indicated in ANSI Y14.15a-1971, Section 15-11, Article 15-11.3.2.1 and Figure 11-4 except that function information and wire run code are not required. Each device connection shall have near each termination, indicated in breaks, conductor identification consisting of the opposite end destination. The wiring diagrams shall be drawn with all devices indicated in their relative physical locations and shall represent the equipment and terminals arranged as they would appear to a person wiring the equipment.

Wiring diagrams shall be prepared on sheets approximately 30 inches by 42 inches. Where interconnecting wiring from different items of equipment or sectional wiring diagrams of the same item of equipment appear on different wiring diagram sheets, all interconnections shall be clearly identified. Where sectional wiring diagrams are required for a single item of equipment, such as a relay panel or control panel, that section of the panel which is represented by each individual wiring diagram sheet shall be keyed on that sheet in a manner acceptable to IPSC.

Information indicated on the Contractor's drawings shall include wiring of the individual panel items as they actually will appear in the panel, contact arrangements of switches, and internal wiring of relays and instruments.

Elementary diagrams shall be cross-referenced to terminal markings on the connection and interconnection diagrams, but need not indicate complete details of circuits external to the panels. Each item of panel mounted equipment indicated on the diagrams shall be identified by item number and name.

Sufficient space shall be left on IPSC's side of outgoing terminal blocks for adding cable color codes and circuit numbers. Color codes and circuit numbers will be added by IPSC. The Contractor shall be responsible for adding the color codes and circuit numbers to his drawings after they are assigned by IPSC.

1C.10 INSTRUCTION MANUALS. Instruction manuals for the unloading, storage, installation, operation, and maintenance of the equipment shall be furnished. The number of

IP7014350

manuals and their required time of delivery are specified in the Schedule of Activities in Section 1A.

1C.10.1 Content. Manuals shall include the following information specific to the furnished equipment:

Table of Contents and index tabs.

Specifications, test data, and curves.

Description of the equipment.

Instructions in the methods of receiving, inspection, storage, and handling prior to installation.

Installation instructions, including instructions for any modifications that are required for existing equipment.

Operating instructions.

Maintenance instructions.

Assembly drawings.

Parts lists.

List of acceptable lubricants.

Nameplate information and shop order numbers for each item of equipment and component part thereof.

List of recommended spare parts.

List of maintenance tools furnished with the equipment.

The above listed requirements are minimum; however, requirements which are clearly not applicable to the equipment may be deleted. Additional information which is necessary for proper operation and care of the equipment shall also be included.

1C.10.2 Binding. Each copy of the manuals shall be assembled and bound in a special binder in accordance with the following:

IP7014351

Manufacturer	Viatech Publishing Solutions 424 North Cedarbrook Avenue Springfield, Missouri 65802 Phone: 1-800-888-0823
Direct contact	Karen Bailey 10621 W. 98th Street Overland Park, Kansas 66214 Email: kbailey@viatechpub.com Phone: 913-894-9699 Fax: 913-894-2505
Binder type	Swing Hinge C78 Split Prong.
Construction	Stiff binder board.
Covering	Supported vinyl, skytogen liner.
Color	Black.
Imprinting	Foil stamp in accordance with drawing bound at end of this section. Color of imprinting to be gold.
Capacities available	Split prong, swing hinge 2 inch or 3 inch as required.

Binder capacities shall not exceed 3 inches, nor shall material included exceed the designed binder capacity. If material to be bound exceeds capacity rating, multiple volumes shall be furnished. Binder capacity should not be more than approximately 1/2 inch greater than the thickness of the material within the binder.

1C.10.3 Submittal. One complete "proof copy" of the proposed manual(s) shall be submitted to IPSC for review. IPSC's review will be for general conformity to specified requirements and is not intended to constitute detailed review of content.

The copy submitted for review shall be complete with binder; however, to expedite the manufacture and shipment of the binders, the binder supplier may contact IPSC directly to secure acceptance of the binder and its imprinting on the basis of the supplier's layout drawing. This will enable manufacturer to proceed without requiring the submittal of a binder proof copy.

Upon acceptance of the manual by IPSC, the Contractor shall distribute the remaining copies to the addresses designated by the IPSC. Separate manuals shall be provided for each of the

IP7014352

two units.

IP7014353

TYPICAL INSTRUCTION BOOK COVER

(Backbone)	(Cover)	
VARIABLE FREQUENCY I. D. FAN DRIVES	INTERMOUNTAIN POWER PROJECT	36
	INTERMOUNTAIN GENERATING STATION	24 24
INTERMOUNTAIN POWER PROJECT	INSTRUCTION BOOK FOR VARIABLE FREQUENCY I. D. FAN DRIVES VOLUME 1	36 36 36 36
INTERMOUNTAIN GENERATING STATION	SUPPLIER/MANUFACTURER ADDRESS ADDRESS	24 24
FILE NUMBER**		14 14
VOLUME 1		

NOTES:
1. All imprinting shall be "News Gothic" style font.
2. All backbone imprinting shall be 14 point.
3. Cover imprinting shall be point sizes indicated in column to right of cover illustration.
4. *Volume number required only if instructions are contained in more than one volume.
5. **B&V assigned file number.

IP7014354

MOTOR INFORMATION SHEET

MOTOR_____

MOTOR DATA TO BE SUBMITTED

MANUFACTURER _____, MODEL _____

HP _____, VOLTS _____, PHASE _____, HERTZ _____

SERVICE FACTOR _____, NEMA DESIGN LETTER _____, FULL LOAD SPEED _____ RPM

ENCLOSURE: TYPE _____, FRAME SIZE _____

INSULATION SYSTEM: CLASS _____ STANDARD _____ SEALED _____, AMB TEMP _____° C

TEMP RISE _____° C BY RESISTANCE AT SERVICE FACTOR OF 1.0 _____, 1.15 _____

FULL LOAD CURRENT _____ AMP, LOCKED-ROTOR CURRENT _____ AMP

SPACE HEATER (IF FURNISHED): NUMBER OF UNITS _____, UNIT RATING, WATTS _____
VOLTS _____, PHASE _____

BEARINGS: TYPE _____, ABMA L-10 RATING LIFE, NOT LESS THAN _____ H

LUBRICATION: TYPE _____ SYSTEM _____

SOUND LEVELS:

SOUND POWER LEVEL
RE 10^{-12} WATTS _____ dBA
FREE FIELD

OVERALL MEAN NO-LOAD SOUND PRESSURE LEVEL
RE 20 MICROPASCALS (0.0002 MICROBAR) REFERENCE
DISTANCE OF 1 METER _____ 2 METERS _____;
_____ dBA FREE FIELD

TOTAL MOTOR WT _____ LB

FOR MULTISPEED MOTORS:
VARIABLE TORQUE _____, CONSTANT TORQUE _____, CONSTANT HORSEPOWER _____
MOTOR TERMINAL CONNECTION DIAGRAM NO. _____ (ATTACH COPY OF DIAGRAM)

FOR WOUND ROTOR MOTORS:
SEC VOLTS _____, SEC AMP _____, SEC RES, OHMS M-M AT 25° C _____

FOR MOTORS IN HAZARDOUS LOCATIONS:
MOTOR ENCLOSURE SURFACE TEMPERATURE, _____° C AT SERVICE FACTOR OF 1.0 _____,
1.15 _____. WILL MOTOR CONTAIN A SURFACE TEMPERATURE CONTROL THERMOSTAT REQUIRING
CONNECTION INTO THE MOTOR STARTER CONTROL CIRCUIT: YES _____, NO _____

FOR DUST IGNITIONPROOF MOTORS: MOTOR ENCLOSURE SURFACE TEMPERATURE RISE UNDER ANY ABNORMAL OPERATING CONDITION INCLUDING OVERLOAD, SINGLE-PHASING, ETC., ASSUMING ENCLOSURE SURFACE TEMPERATURE OF 120° C WHEN ABNORMAL CONDITION DEVELOPS:

MINIMUM TIME TO REACH 165° C _____ S

MAXIMUM RATE OF RISE _____° C IN 5 S

ADDITIONAL MOTOR DATA FOR MOTORS LARGER THAN 200 HP AND FOR ALL MOTORS RATED ABOVE 600 VOLTS SHALL BE SUBMITTED ON SHEETS 2 AND 3.

IP7014355

MOTOR INFORMATION SHEET

MOTOR_____

ADDITIONAL MOTOR DATA TO BE SUBMITTED FOR MOTORS LARGER THAN 200 HP AND FOR ALL MOTORS RATED ABOVE 600 VOLTS

EFFICIENCY, PERCENT GUARANTEED, LOAD: 1/2 _____ 3/4 _____ 4/4 _____
POWER FACTOR, PERCENT GUARANTEED, LOAD: 1/2 _____ 3/4 _____ 4/4 _____

MINIMUM STARTING VOLTAGE IN PERCENT OF RATED VOLTAGE:
CALCULATED: _____
SPECIFIED: _____

OCTAVE BAND MEAN NO-LOAD SOUND PRESSURE LEVEL RE 20 MICROPASCALS (0.0002 MICROBAR)
REFERENCE DISTANCE OF 1 METER _____; 2 METERS _____

CENTER FREQUENCY, HZ	LEVEL, dBC
31.5	
63	
125	
250	
500	
1,000	
2,000	
4,000	
8,000	

OUTLINE DWG NO. _____

ACCELERATING TIME:
AT RATED VOLTAGE _____ S
AT MINIMUM SPECIFIED
STARTING VOLTAGE _____ S
LOCKED-ROTOR PF _____ PERCENT
LOCKED-ROTOR TORQUE _____ LB-FT
PULL-UP TORQUE _____ LB-FT
BREAKDOWN TORQUE _____ LB-FT
TOTAL ROTOR WT _____ LB
ROTOR INERTIA _____ LB-FT^2
OPEN CIR. TIME CONSTANT _____ S
FOR VERTICAL MOTORS:
REED FREQUENCY _____ HZ

THERMAL LIMIT CURVE UNDER LOCKED-ROTOR, ACCELERATION, AND RUNNING OVERLOAD CONDITIONS; AND TIME-CURRENT CURVES DURING ACCELERATION AT RATED VOLTAGE AND AT MINIMUM SPECIFIED STARTING VOLTAGE CURVE NO. _____ (ATTACH CURVE)

LOCKED-ROTOR SAFE STALLED TIME, S	RATED VOLTAGE	MINIMUM SPECIFIED STARTING VOLTAGE
MOTOR INITIALLY AT MAXIMUM SPECIFIED AMBIENT TEMPERATURE		
MOTOR INITIALLY AT SERVICE FACTOR LOAD OPERATING TEMPERATURE		

IP7014356

MOTOR_____

ADDITIONAL MOTOR DATA TO BE SUBMITTED FOR MOTORS LARGER THAN 200 HP AND FOR ALL MOTORS RATED ABOVE 600 VOLTS (Continued)

SPEED-TORQUE-CURRENT CURVES AT RATED VOLTAGE AND AT MINIMUM SPECIFIED STARTING VOLTAGE, IN PERCENT OF FULL LOAD OR CURVE NUMBERS _____ (ATTACH CURVES)	RATED VOLTAGE		MINIMUM SPECIFIED STARTING VOLTAGE	
	TORQUE, LB-FT	CURRENT, AMP	TORQUE, LB-FT	CURRENT, AMP
AT SPEED CORRESPONDING TO MAXIMUM TORQUE				
AT 80% SPEED				
AT 60% SPEED				
AT LOCKED-ROTOR				

NUMBER OF SUCCESSIVE STARTS:	AT RATED VOLTAGE	AT MINIMUM SPECIFIED STARTING VOLTAGE
MOTOR INITIALLY AT MAXIMUM SPECIFIED AMBIENT TEMPERATURE (COLD)		
MOTOR INITIALLY AT SERVICE FACTOR LOAD OPERATING TEMPERATURE (HOT)		
COOLING PERIOD REQUIRED AFTER COMPLETION OF THE PRECEDING MAXIMUM NUMBER OF SUCCESSIVE STARTS BEFORE MAKING ADDITIONAL STARTS BASED ON THE FOLLOWING COOLING CONDITIONS, MINUTES		
MOTOR RUNNING AT SERVICE FACTOR LOAD		
MOTOR RUNNING WITH DRIVEN EQUIPMENT UNLOADED		
MOTOR DE-ENERGIZED, COASTED TO STOP, AND LEFT IDLE		

FOR MOTORS FOR WHICH DIFFERENTIAL PROTECTION IS SPECIFIED, STATOR CONN: WYE_____, DELTA_____

FOR MOTORS REQUIRING INTEGRAL WATER COOLING OF BEARING OIL:
FLOW OF COOLING WATER REQUIRED _____ GPM
MAXIMUM COOLING WATER INLET TEMPERATURE _____ ° C
FOR MOTORS CONNECTED TO EXTERNAL LUBRICANT RECIRCULATING SYSTEM:
FLOW OF OIL REQUIRED TO MOTOR BEARINGS: _____ GPM AT _____ ° C MAXIMUM AT _____ PSI
BEARING HEAT REJECTION TO OIL: _____ BTU/H
OUTLET TEMPERATURE OF OIL FROM MOTOR BEARINGS: ____ ° C MAXIMUM
FOR HORIZONTAL MOTORS RATED 1,000 HP AND LARGER AT 3,600 RPM AND FOR ALL MOTORS RATED 3,500 HP AND LARGER AT ALL SPEEDS:
CRITICAL SPEEDS: FIRST CRITICAL _____ RPM
SECOND CRITICAL _____ RPM

IP7014357

Section 1Q - GENERAL QUALITY SYSTEM REQUIREMENTS

1Q.1 PURPOSE/SCOPE. The purpose of this supplemental document to the technical requirements is to establish a set of requirements pertaining to the quality of supplied equipment and commodities.

1Q.2 QUALITY SYSTEM. It is the responsibility of the Contractor to define and implement a detailed and documented quality management system which ensures that all equipment and commodities supplied are in conformance with required drawings and/or specifications and which meets all the guidelines (requirements) set forth in this document. The system shall be capable of providing assurance that design, purchasing, materials, manufacturing, examination and testing of equipment, shipping, storage, and related services comply with the requirements of the purchase order.

The Contractor's quality system shall include, at a minimum, procedures or methods to ensure that the following are controlled:

Design documents, drawings, specifications, quality assurance procedures, quality records, inspection procedures, inspection and test status, and purchase documents maintained current, accurate, and under control.

Purchased materials, equipment, and services conform to the requirements of this purchase order.

Receipt inspection, in-process inspection, examination, testing, and checkouts conducted.

Shipping, storage, and preservation of equipment and commodities supplied meet purchase order requirements.

Adequate inspection of subcontracted work.

Control of special processes such as welding, heat treating, hot forming, and nondestructive testing.

Proper methods employed for the qualification of personnel who are performing special processes: welding, nondestructive examinations, coatings, etc.

Inspection, measuring, and test equipment.

Procedures that document and control the verification, storage, use, and maintenance of customer supplied product provided for incorporation into manufactured equipment or commodities.

IP7014358

Any applicable commercial standards (such as ANSI, AGMA, API, ASME, etc.) should also be incorporated into this system. This system shall be made available to the Engineer's Quality Management Services (QMS) Department for review upon request.

1Q.3 QUALITY SYSTEM MANUAL. The quality system shall be documented in a quality system manual. One controlled copy of the manual shall be submitted to the Engineer's QMS Department. The quality system manual shall be kept current by submittal of revisions as applicable throughout the life of the purchase order.

1Q.4 SUBCONTRACTORS. Contractor shall notify the Engineer in writing prior to the award of this purchase order of the intention to use subcontractors. If, at the time of award of this purchase order, the prime contractor does not know the name of the subcontractor, the prime contractor shall provide the name, type, and location of the subcontractor and the Contractor's subcontractor qualification documentation prior to award of subcontractor's purchase order.

The Contractor shall ensure that subcontractors have the capabilities to fulfill purchase order requirements. Contractors shall submit objective evidence of subcontractor's capabilities, processes, or in-process work involving the fabricating and manufacturing of equipment and commodities for IPSC.

Subcontractor qualification and monitoring are the responsibility of the Contractor, in accordance with this supplemental specification, to ensure the same high quality standards. When deemed necessary, the Engineer's QMS Department has the authority to perform quality audits and inspections, and monitor and/or review subcontractor processes and facilities.

1Q.5 INSPECTIONS BY ENGINEER. Engineer's QMS Department may elect to perform inspections, quality audits, or witness testing at any time during the manufacturing process. Engineer's QMS Department may designate an authorized agent for inspections, witness testing, or quality audits. Authorized agent can be an employee of the Engineer or an out side agency. When an outside agency is designated as an authorized agent for the Engineer, such designation will be in writing with a copy provided to the Contractor. Hereinafter, when an Engineer's representative is used, it may also mean the Engineer's QMS Department or the authorized agent.

The following requirements shall apply for Engineer's inspection at the Contractor's mill, factory, yard, or warehouse.

1Q.5.1 Inspection and Test Plan. In accordance with the Schedule of Submittals, a detailed inspection and test plan (i.e., a Quality Assurance/Quality Control Plan) for the work shall be submitted to the Engineer as specified in the purchase order. The inspection and test plan is a detailed step-by-step list of operations and requirements which shall identify the inspection and testing points for major components of the work and shall be maintained current

IP7014359

throughout the purchase order. The plan shall include the Contractor's strategy for inspecting subcontractor's work, including inspection by the Contractor at his subcontractor's facilities. The Engineer's QMS Engineer will designate any test witness points or other inspection points required.

1Q.5.2 Access. Engineer will have the right to inspect the Contractor's and subcontractor's work and related documents in the course of manufacture providing no delays in manufacture are caused thereby. The Contractor is required to provide, at his own expense, reasonable facilities including tools and instruments for demonstrating acceptability of the work.

1Q.5.3 Test Witnessing. If called for in the purchase order and when designated as a hold point, witnessing of mill or factory tests must be performed in the presence of the Engineer's representative unless waived in writing by the Engineer's representative. The Contractor shall bear all expense of such tests except the compensation and expense of the Engineer's representative.

The Contractor shall inform and notify the Engineer's QMS Engineer at least 10 working days in advance of the appropriate times of inspections and tests, when such inspection and test points have been designated as required hold points for witnessing. The work shall not progress past a required inspection and test point until the Engineer's QMS Engineer has inspected the work or witnessed the designated test, or waived in writing the right to perform an inspection or to witness a test.

1Q.5.4 Corrective Action. Upon detection of a noncompliance with the requirements of the purchase order or the Contractor's quality system, the Contractor shall document the noncompliance issue and provide the Engineer's representative a copy of the report. If the Contractor does not document the noncompliance, then the Engineer's representative shall issue a corrective action report to the Contractor. The Contractor will be required to correct, in a timely manner, all deficiencies identified.

1Q.5.5 Rejection. If any items or articles are found not to meet the requirements of the specifications, the lot, or any faulty portion thereof, may be rejected. Before offering specified material or equipment for shipment, the Contractor is required to inspect the material and equipment and eliminate any items that are defective or do not meet the requirements of the purchase order. The fact that materials or equipment have been previously inspected, tested, and accepted does not relieve the Contractor of responsibility in the case of later discovery of flaws or defects.

1Q.6 RECEIPT INSPECTION. Materials or equipment purchased under this purchase order may be inspected at the specified receiving points and will either be accepted or rejected. Inspection will include the necessary testing for determining compliance with the specifications. All expense of initial acceptance tests will be borne by IPSC. The expense of subsequent tests, due to initial test failures, will be charged against the Contractor.

IP7014360

Section 1S - SEISMIC DESIGN

1S.1 GENERAL. This section specifies the general criteria and procedures that shall be used to ensure that structures, components, and equipment meet performance objectives during and following a seismic event. The intent of these procedures is to minimize the hazard to human life. Buildings and structures may be damaged but remain suitable for occupancy and use, albeit in an impaired condition. The damage is anticipated to be repairable. Components and equipment are expected to remain in place without collapsing or breaking away from supports, and to remain intact to the extent that they do not create an ignition hazard or release hazardous materials.

The building structural system shall provide a continuous load path, or paths, with adequate strength and stiffness to transfer all seismic forces from the point of application to the final point of resistance.

Components and equipment shall be attached so that seismic forces are transferred to the structural system of the building. These attachments shall be bolted, welded, or otherwise positively fastened. Frictional resistance due to gravity shall not be considered in evaluating the required resistance to seismic forces.

For seismic design of vessels, tanks, and other components, contents that are flammable, explosive, corrosive, acidic, caustic, toxic, or that otherwise present a danger to the general public if released shall be considered hazardous materials.

Seismic design shall be performed in accordance with the building code specified in the Site Meteorological and Seismic Data Sheet found at the end of this section, along with the following references:

- American Institute of Steel Construction (AISC), "Specification for Structural Steel Buildings - Allowable Stress Design and Plastic Design," 1989.
- American Institute of Steel Construction (AISQ, "Load and Resistance Factor Design Specification for Structural Steel Buildings," 1993.
- American Institute of Steel Construction (AISC), "Seismic Provisions for Structural Steel Buildings," 1997.
- American Concrete Institute (ACI), ACI 318-99, "Building Code Requirements for Structural Concrete," 1999.
- American Society of Mechanical Engineers (ASME), "Boiler and Pressure Vessel Code," 1995, and all addenda.
- American National Standards Institute (ANSI), "ASME Code for Pressure Piping, ASME B31.1 - 1995, Power Piping."
- Manufacturers Standardization Society of the Valve and Fitting Industry (MSS), MSS SP-58, "Pipe Hangers and Supports -Materials, Design, and Manufacture," 1988.
- American Petroleum Institute (API), API 650, 'Welded Steel Tanks for Oil Storage," 1993.

IP7014361

- American Water Works Association (AWWA), AWWA D100, "Welded Steel Tanks for Water Storage," 1984.
- National Fire Protection Association (NFPA), NFPA 13, "Standard for the Installation of Sprinkler Systems," 1990.
- Other nationally recognized and accepted design standards and references as appropriate.

1S.2 SEISMIC FORCES. Seismic forces shall be determined from the basic seismic parameters given in the Site Meteorological and Seismic Data Sheet found at the end of this section. The design forces and their distribution over the height of the building or structure shall be determined using a linearly elastic analysis model and the procedures listed in the specified building code. Load combinations, including seismic, shall be in accordance with the specified building code.

Hydrodynamic effects of contents shall be considered in the seismic design of vessels and tanks as required by the specified building code.

1S.3 SEISMIC DESIGN.

1S.3.1 Buildings. Buildings shall provide sufficient strength and ductility to resist the specified seismic effects and may use any of the basic structural systems permitted by the specified building code. Usage of structural systems shall be in accordance with the limitations prescribed in the specified building code. The effects of both plan and vertical irregularities shall be considered, as required by the specified building code.

Buildings shall be seismically analyzed using either Equivalent Lateral Forces or Modal Analysis and shall meet all of the design, proportioning, detailing, inspection, and quality assurance provisions of the specified building code.

"W" for buildings shall include the total dead load, the total operating weight of permanent equipment and the effective contents of vessels, and applicable portions of other loads, as required by the specified building code.

1S.3.2 Nonbuilding Structures. Nonbuilding structures include all self-supporting structures, other than buildings, bridges, and dams, that are supported by the earth; that carry gravity loads; and that may be required to resist seismic effects. Design of nonbuilding structures shall provide sufficient strength and ductility, consistent with the requirements for buildings, to resist the specified seismic effects.

Nonbuilding structures shall be seismically analyzed using either Equivalent Lateral Forces or Modal Analysis, and shall meet all of the design, proportioning, detailing, inspection, and quality assurance provisions of the specified building code.

IP7014362

"W" for nonbuilding structures shall include all dead load as defined for buildings, and shall also include all normal operating contents of tanks, vessels, bins, and piping.

Seismic design of reinforced concrete chimneys shall use the Dynamic Response Spectrum Analysis method of ACI 307-98. Seismic design of steel stacks shall also use the Dynamic Response Spectrum Analysis method. The analytical model used in the dynamic analysis of these structures shall be sufficiently refined to represent variations of chimney, stack, and liner masses; variations of stiffness; and the foundation support condition.

1S.3.3 Equipment. Seismic design of mechanical and electrical equipment, attachments, and supports shall consider the dynamic effects of the equipment; its contents; piping attached to its nozzles; and, when appropriate, its supports. Most mechanical and electrical equipment is presumed to be inherently rugged and capable of surviving strong motions and earthquakes provided it is adequately attached to the structure. It is not the intent of this specification to require seismic design of mechanical or electrical assemblies unless it is considered to be essential for life-safety and must remain functional during and after an earthquake.

Equipment mounted on vibration isolation systems shall have a bumper restraint or snubber in each horizontal direction. These seismic restraints shall be designed for twice the seismic force acting on the equipment. Seismic supports shall maintain positive engagement with the equipment.

If the equipment is essential and must remain functional after an earthquake, or if the equipment contains hazardous materials, it may be seismically qualified by design or by testing. Adaptation of a nationally recognized standard for qualification by testing is acceptable, provided that the equipment seismic capacity equals or exceeds the requirements of the specified building code.

1S.3.4 Components. Components are architectural, mechanical, and electrical parts and portions that are attached to and supported by the building but are not part of the building structural system, such as nonbearing walls and partitions, ceilings, storage racks, access floors, tanks, piping, HVAC ductwork, elevators, electrical panels, cable tray, and other nonstructural items. Components shall have the same Seismic Performance Category as the building to which they are attached.

Fire protection components, equipment, and piping shall be functional after an earthquake and shall be assigned the corresponding Importance Factor, IP.

W_p for tanks, bins, and silos shall represent the weight of the tank structure and appurtenances and the operating weight of the contents at maximum rated capacity.

W_p for piping systems shall represent the total distributed operating weight of the piping system, including but not limited to any insulation, fluids, and concentrated loads such as valves, condensate traps, and similar components.

IP7014363

Seismic effects that shall be analyzed in the design of piping systems include the dynamic effects of the piping system, contents, and, when appropriate, supports. The interaction between the piping system and the supporting structures, including other mechanical and electrical equipment, shall also be considered.

In addition to seismic loadings, piping systems shall be designed to withstand dead plus operating loading, occasional (wind or hydrotesting) loading, and thermal loadings. Wind loadings shall not be considered to act concurrently with seismic loadings.

1S.4 DOCUMENTATION. Complete structural support and anchorage details shall be shown on all drawings, including the size of members, details of connections, anchor bolt sizes, etc.

If the specified building code is ASCE 7-95, the following seismic design data shall be indicated on the design drawings:

- Effective Peak Acceleration, A_a.
- Effective Peak Velocity-Related Acceleration, A_v.
- Building Classification Category.
- Seismic Performance Category.
- Soil Profile Type.
- Basic Structural System and Seismic Force Resisting System.
- Response Modification Coefficient, R, and Deflection Amplification Factor, C_d.
- Seismic Analysis Procedure.

If the specified building code is ASCE 7-98 the following seismic design data shall be indicated on the Design Drawings:

- Seismic Use Group.
- Spectral Response Coefficients S_{DS} and S_{DI}.
- Site Class.
- Basic Seismic-Force-Resisting System.
- Design Base Shear.
- Analysis Procedure.

If the specified building code is either BOCA or SBC, the following seismic design data shall be indicated on the design drawings:

- Effective Peak Velocity-Related Acceleration, A_v.
- Effective Peak Acceleration, A_a.
- Seismic Hazard Exposure Group.
- Seismic Performance Category.
- Soil Profile Type.
- Basic Structural System and Seismic Force Resisting System.
- Response Modification Coefficient, R, and Deflection Amplification Factor, C_d.
- Seismic Analysis Procedure.

IP7014364

If the specified building code is UBC, the following seismic design data shall be indicated on the design drawings:

- Seismic Zone.
- Occupancy Category.
- Importance Factor, I.
- Soil Profile Type.
- Base Shear Coefficient.
- Basic Structural System and Seismic Force Resisting System.
- Response Modification Coefficient, R.
- Seismic Analysis Procedure.

If the specified building code is IBC 2000, the following seismic design data shall be indicated on the design drawings.

- Seismic Use Group.
- Spectral Response Coefficients S_{DS} and S_{DI} Site Class.
- Basic Seismic-Force-Resisting System.
- Design Base Shear.
- Analysis Procedure.

Equipment and component drawings shall indicate the total load and/or loads to be transmitted to the structure that must ultimately restrain the components, equipment, or structure. This information shall include the weight, dimensions locating the center of gravity of the component or equipment, or the seismic design forces (magnitude, direction, and location) acting on the supports.

If requested by the Engineer, design calculations shall be submitted for all structures, equipment, or components which are designed in accordance with this section of the specification. If requested by the Engineer, these calculations shall be certified by a professional engineer registered in the appropriate jurisdiction.

IP7014365

Site Meteorological and Seismic Data Sheet

Work shall be designed according to the following building code and site conditions.

Building Code: IBC 2000

Occupancy Category II Substantial Hazard Facilities

Meteorological Data:

Basic Wind Speed, V 90 MPH 3-second gust speed with 50-year mean recurrence interval

Exposure C Flat and Generally Open Terrain

Ground Snow Load, Pg _____ 50-year mean recurrence interval

Site Elevation (mean seal level) _____

Seismic Design Data:

Maximum Considered Earthquake Spectral Response Accelerations

At Short Periods (Ss) 0.43 g

At 1 Second Period (S1) 0.14 g

Seismic Use Group II Substantial Hazard Facilities

Site Class D Stiff soil profile

IP7014366

PART 2 - TECHNICAL REQUIREMENTS

TABLE OF CONTENTS

		Page
Section 2A - MEDIUM VOLTAGE VARIABLE FREQUENCY DRIVES		2A-1 thru 2A-27
2A.1	General	2A-1
2A.2	Performance	2A-3
2A.3	Design Calculations	2A-9
2A.4	Availability	2A-9
2A.5	Serviceability/Maintainability	2A-10
2A.6	Physical Requirements	2A-10
2A.7	Protective Devices/Diagnostics	2A-13
2A.8	Programming and Communications	2A-16
2A.9	Component Requirements	2A-17
2A.10	Switchgear	2A-21
2A.11	Accessories	2A-22
2A.12	Testing	2A-22
2A.13	Delivery	2A-23
2A.14	Training	2A-24
2A.15	Startup	2A-24
Induced Draft Fan Speed-Torque Curve		2A-25
Hardwired Control Signal List		2A-26
Section 2B - VFD ISOLATION (VFDI) TRANSFORMERS		2B-1 thru 2B-11
2B.1	Input Isolation Transformer	2B-1
2B.2	Liquid Filled Transformers	2B-1
2B.3	Dry Type Transformers	2B-2
2B.4	Mechanical Construction	2B-3
2B.5	Core and Coils	2B-4
2B.6	De-Energized Taps	2B-4
2B.7	Forced Cooling	2B-4
2B.8	Accessories	2B-5
2B.9	Termination Compartments	2B-5
2B.10	Factory Testing	2B-6
2B.11	Scope of Supply	2B-6
2B.12	Schedule of Contract Submittals	2B-7
2B.13	Performance and Design Technical Requirements	2B-7
2B.14	Required Bid Submittals	2B-9
2B.15	Technical Data	2B-9

IP7014367

		Page
Section 2C - MEDIUM VOLTAGE INDUCTION MOTORS		2C-1 thru 2C-14
2C.1	General	2C-1
2C.2	Design and Construction	2C-1
2C.3	Scope of Supply	2C-7
2C.4	Scope of Erection/Construction	2C-7
2C.5	Schedule of Contract Submittals	2C-8
2C.6	Performance and Design Requirements	2C-9
2C.7	Additional Requirements	2C-12
2C.8	Required Bid Submittals	2C-13
2C.9	Technical Data	2C-13
DRAWING LIST		1 thru 2

IP7014368

Section 2A - MEDIUM VOLTAGE VARIABLE FREQUENCY DRIVES

2A.1 GENERAL. This section specifies requirements for variable frequency drives (VFD) for large 3-phase synchronous or squirrel cage induction motors. Both current source load commutated (LCI) and pulse width modulated (PWM) drives are being considered.

To the extent possible, considering this is a retrofit application, the intent is to purchase the suppliers standard equipment with needed available options. Alternate configurations will be considered. If existing synchronous motors are used, two VFDs, complete with all required control components, shall be furnished for each motor. If new motors are provided, one drive per motor is needed. This project requires VFDs for eight ID fan motors.

VFDs shall be manufactured and completely assembled including the input transformer at the Contractor's factory

The VFDs shall be housed in the existing control building along with any associated cooling equipment. The Contractor shall include in his proposal the expected and maximum heat loss on a per drive bases for the VFD proposed.

Rated capacity	10,000 hp per fan at 1050 RPM and 8200 hp at 954 RPM.
Quantity	VFD systems for eight fans total over the next four years.
Application	ID fan service.
Input voltage	Existing transformers - 6900 to 3876 volts. (see Nameplate)
Nominal frequency	60 Hz.
Short-circuit current at point of common coupling	32 kA at 6900V symmetrical (max.)
VFD equipment enclosure	NEMA 1.
Ambient temperature	-35° C to 50° C.
Speed range	Existing 0 – 954 RPM. 0 - 1050 rpm

IP7014369

2A.1.1 Coordination. The design of each VFD shall be coordinated with the design of the electric supply and driven equipment. The Contractor shall be responsible for furnishing each VFD, for matching the motor and the drive, and for coordinating the collection of data and the design effort to limit harmonics to the specified levels. The Contractor shall be knowledgeable of the requirements specific to the loads that are powered by each VFD. Applicable VFD system options, unique to the load type, shall be provided.

2A.1.2 Nameplates. All devices mounted on the face of each drive shall be provided with suitable nameplates. Push buttons, selector switches, and pilot lights shall have the device manufacturer's standard legend plate. All other devices shall have an engraved, phenolic laminated plate, with black lettering on a white background.

2A.1.3 Instruction Manuals. In addition to requirements indicated in Section 1C, Contractor's instruction manuals for each size of VFD shall be furnished and shall include the following:

Contractor's standard manuals for each size and type of bypass switch, output contactor, transformer, line reactor, and filter.

Schematics, wiring diagrams, and panel drawings in conformance with construction records.

Troubleshooting procedures, with a cross-reference between symptoms and corrective recommendations.

Connection data to permit removal and installation of recommended smallest field-replaceable parts.

Information on testing of power supplies and printed circuit boards and an explanation of the drive diagnostics.

2A.1.4 Codes and Standards. It is desirable that the proposed layout of the equipment be in accordance with standards listed below, however if due to equipment sizing the proposed arrangement can not comply with any of the standards the Contractor shall list in his proposal the variation and reason. The equipment shall be provided in full accordance with the latest applicable rules, regulations, and standards of the following:

National Electrical Code (NEC).

Underwriters' Laboratories (UL).

American National Standards Institute (ANSI).

National Electrical Manufacturers Association (NEMA).

IP7014370

Institute of Electrical and Electronics Engineers (IEEE).

Federal Communications Commission (FCC).

2A.1.5 Acceptable VFD Systems. The Contractor shall be able to demonstrate at least 10 years of experience in manufacturing VFDs at medium voltage, to demonstrate their capability to provide parts and service support. The proposed VFD system shall have been commercially available for a period of not less than 2 years prior to the date of contract award. The Contractor shall provide at least three sites and names of individuals that may be contacted in his proposal where similar equipment has been retrofitted.

2A.1.6 Experience. It is the intent of this specification to purchase dependable and reliable equipment offering the best performance available from current proven technology. All equipment furnished under this purchase order shall, therefore, have documentation showing proof of actual operation for a minimum of 2 years in similar service. It is also the intent of this specification to procure the Contractor's standard system with any options required to meet this specification. However, any deviations from this specification shall be clearly identified in the Proposal section as exceptions.

2A.2 PERFORMANCE. Each VFD system for a fan motor shall be capable of 10,000 hp output at 0.9 per unit input voltage to the VFD. Each VFD shall also be designed and constructed to meet the required performance as specified in the following articles.

2A.2.1 Operating Envelope. Each VFD shall meet the following speed and torque requirements.

Each drive shall provide a turning gear speed of 10 % speed. The Contractor shall verify that the minimum speed of 10% is acceptable to the motor vendor.

Each VFD shall be capable of producing a variable ac voltage/frequency output to provide continuous operation over the speed range of 10% to 1050 rpm. Drives shall include a software setable maximum speed limit. Each VFD shall be capable of sustained operation at 1/10 speed to facilitate checkout and maintenance of the driven equipment. As a commissioning and troubleshooting feature, each VFD power circuit shall be capable of operating without a motor connected to a VFD output.

Each VFD shall be capable of operating any new standard ac motor of equivalent rating (horsepower and speed) over the specified speed range. Each VFD shall be rated to power the motor continuously at the motor's rated nameplate horsepower multiplied by the service factor.

IP7014371

The controls in each VFD shall provide an adjustable maximum horsepower limit so the drive output can be matched to the existing motor (if being re-used) or to a larger motor (up to 10,000 HP).

Overload torque shall be 105 percent of full load torque.

2A.2.2 Operating Range. Each VFD system shall be designed to enable fan operation over the entire operating range defined on the speed-torque curve shown in Figure 3-3, located at the end of this section.

2A.2.3 Input Harmonics. VFDs input harmonics shall comply with the latest edition of IEEE 519 for total harmonic voltage and current distortion calculation and measurement and meet the following distortion limits:

> Voltage Harmonics: Individual or simultaneous operation of the VFDs shall not add more than 2.5 percent total harmonic voltage distortion while operating from the utility source.
>
> Current Harmonics: Maximum allowable total harmonic current distortion limits for each VFD shall not exceed 5 percent as calculated and measured at the point of common coupling.

Each motor converter shall be 24 pulse or provide harmonic filters to provide equivalent harmonic performance.

Compliance shall be verified by the Contractor with field measurements of harmonic distortion differences at the point of common coupling with and without VFDs operating. The point of common coupling (PCC) for all harmonic calculations and field measurements for both voltage and current distortion shall be defined as the main breaker feeding the 6900 volt bus feeding the drive, based on individual motors
Power quality metering shall be installed in each VFD system to continuously monitor and display input and output power quality. The power quality data shall include the following:

> Input voltage (average rms value).
>
> Input current (individual phase rms values and average rms value).
>
> Input frequency.
>
> Power factor.
>
> Input (kW, kvar).
>
> Input (kWh).

IP7014372

Input current THD (average of three phases).

Single harmonic calculation in input voltage or current (phase A, B, or C).

Drive efficiency.

Motor voltage (rms).

Motor current (rms).

Motor speed (in rpm or percent).

Motor flux (percent).

Motor torque (percent).

Drive output power (kW).

Output (kWh).

2A.2.4 Motor Compatibility. Characteristics of the existing ID fan motors:

Service	ID fan
Machine type	Synchronous
Mounting	Horizontal
Enclosure	NEMA WPII with filters
Insulation	Class F; Thermalastic
Temperature rise	75° C
Standards	NEMA and IEEE
Ambient temperature maximum	50° C
Altitude maximum	4700 ft above mean sea level
Duty	Continuous

IP7014373

Rated output, hp	7,415 hp
Service factor	1.0
Voltage, volts/ frequency/phase	3876 V, 63.6 Hz, 3-phase
Speed, rpm	954
Current, amps	2 windings, shifted 30°, 472 full load amps each when two windings in service. With 1 winding in service, 506 amps.
Locked rotor amps, max.	N/A
Efficiency, min. (full load)	97 percent
Power factor, min. (full load)	0.9 percent
Starting voltage range	VFD
Starting capability	VFD
Running capability	VFD
Bearings	Sleeve
Bearing lubrication	Forced oil, recirculation type Each bearing requires 2.5 GPM at 20 PSIG
Temperature detectors	One Type E thermocouple per bearing, two 10 ohm copper RTD's per winding
Windings	Copper
Vibration detectors	Mounting only
Terminal box	Two per motor, includes 3 neutral current transformers
Space heater	Yes
Sound level	85 dB at 3 feet in accordance with IEEE 85
Tests	Copies will be made available for review
Incoming cable	Shielded cable in conduit

IP7014374

Current transformers	If required
Surge capacitors	No
Lightning arresters	No

If the existing motors are used, each VFD system shall provide an output waveform suitable for the existing motors. Contractor shall verify that his equipment will not be detrimental to the motor life expectancy shall not be compromised in any way by operation with a VFD system. Each VFD shall provide motor overload protection in any operating condition.

The system design shall not have any inherent output harmonic resonance in the operating speed range.

Each VFD output shall be tuned to minimize electrically induced pulsating torque to the output shaft and the mechanical system. The Contractor shall be responsible for damage to the existing motor, coupling, and fan due to torque pulsations. The Contractor shall repair and/or replace items damaged at no cost to IPSC
Existing input transformers and reactors may be used if adequate for the service. New transformers and reactors shall be provided if existing transformers and reactors are not adequate.

2A.2.5 VFD System Efficiency. Guaranteed minimum total VFD system efficiency (ηsys) shall be a minimum 96 percent at 100 percent speed and 100 percent load and minimum 95 percent at 80 percent speed and 50 percent load. Efficiency evaluation shall include input transformer, harmonic filter and power factor correction (if applicable), VFD converter, and output filter, as indicated below. Auxiliary controls, such as internal VFD control boards, cooling fans, or pumps, shall be included in all loss calculations.

The efficiency of a VFD system shall be calculated as follows:

$$\eta sys = \eta VFD \times \eta xfmr \times \eta pfc \times \eta harm \times \eta filter$$

Converter/Inverter (VFD)	ηVFD
Input Transformer	$\eta xfmr$
Power Factor Correction	ηpfc
Input Harmonic Filter	$\eta harm$
Output Filter	$\eta filt$

Total VFD System Efficiency (ηsys) shall be 96.0 percent at full load and 95 percent at 50 percent load.

IP7014375

A penalty ($1,275 per kW) shall be assessed if efficiency is not achieved and shall be deducted from the purchase order price.

System Input Power Factor

Each VFD system shall maintain a 95 percent minimum true power factor from 30 percent to 100 percent of rated speed. The Contractor shall supply a power factor correction system, if required, to meet this requirement. The power factor correction unit shall include a separate input isolating contactor with fuses, power factor correction grade capacitors (voltage class shall be consistent with each VFD system input voltage), and series harmonic decoupling reactors, all integrated into the VFD system and mounted within each VFD enclosure. A penalty ($50 per kVAR) shall be assessed if power factor is not achieved and shall be deducted from the purchase order price.

2A.2.6 Speed Control System. The speed control system shall be designed to be compatible with the IPSC-furnished plant control system. The speed control system, shall also be in accordance with the paragraphs which follow.

The speed control system shall provide linear speed control corresponding to IPSC-furnished 4-20 mA (linear from 0-100 percent) speed control signal. Dynamic speed control range shall be 0 to 100 percent. Steady-state speed control range shall be 10 to 100 percent. The speed control shall be capable of setting the motor speed to an accuracy of plus or minus one percent of the test block speed of the fan.

A change in IPSC-furnished speed control signal shall not initiate a drive system acceleration or deceleration torque command unless the IPSC-furnished speed control signal changes by a field adjustable amount. The range of this field adjustable amount shall be from plus or minus 0.5 percent to plus or minus 5 percent of full speed.

The speed control system shall be inherently stable when the IPSC-furnished speed control signal is in a steady-state condition. The speed control system shall automatically adjust rectifier SCR firing to maintain motor speed to compensate for motor load changes and 6,900 volt bus voltage changes. Changes in motor load and 6,900 volt bus voltage shall not initiate acceleration or deceleration torques. Steady-state speed control shall be within plus or minus one rpm without encoder or tachometer feedback

It is expected that during starting of other large motors, the 6,900 volt bus voltage will drop momentarily to as low as 5,400 volts. This condition shall not affect motor speed as long as sufficient current, up to current limit, is available in relation to supply voltage to maintain motor speed. If insufficient current is available to maintain drive speed, the current applied shall be the current limit. The speed control system and all components of the ID Fan Variable Frequency Drive shall be capable of sustaining this condition for a minimum of 30 seconds after which coasting of the motor will be permitted. Normal control shall be initiated as soon as the 6,900 volt bus voltage reaches 6,600 volts. Speed control should resume once motor is out of current limit.

IP7014376

During certain times the input voltage will drop to 70% of its rating, motor coasting shall be initiated. Normal control shall be initiated as soon as the 6,900 volt bus voltage reaches 6,600 volts.

The electric adjustable speed drive systems shall be suitable for continuous operation at turning gear speed for equipment cool-down. Proposed information shall describe operation at turning gear speed.

2A.2.7 Sound Level. Maximum allowable audible noise from a VFD system shall be 75 dB(A) at a distance of 1 meter (3.3 feet) at any speed or load condition. VFD systems with audible noise in excess of this limit shall be provided with sufficient noise abatement treatment to reduce the sound pressure level below 75 dB(A).

2A.3 DESIGN CALCULATIONS.

2A.3.1 Torsional Analysis. The price of a torsional analysis shall be included in the base price. A deduct shall be included in case IPSC chooses not to have a torsional analysis. The total rotating system shall be analyzed to determine its natural resonant frequencies. Stresses shall be calculated for elements of the rotating system, utilizing torsional excitation data from the drive and driven system, taking into account potential fault conditions and appropriate amplification and damping factors of the rotating system. A written report on the analysis, which details the procedures used and the assumptions that were considered, shall be provided. The results of the analysis shall be presented in both detailed and summary form. Specific data presented shall include the following:

A diagram of the frequencies of the torque pulsations and the mechanical resonant frequencies showing their coincident points.

A plot of total shaft stress versus operating speed for the most highly stressed areas of the rotating system.

A diagram of the rotating system model and mode shapes for resonance(s) of interest.

Tables summarizing total calculated stresses for each element of the rotating system at operating speeds where interference(s) exist between torsional excitations and torsional resonance.

Details of the rotating system used in the analysis, including the specified or a recommended alternate coupling. If a new coupling is required the Contractor shall furnish it.

IP7014377

Recommendations for any modifications to the proposed system, if indicated by the analysis to be advisable, the cost of which shall be borne by the Contractor.

2A.3.2 Harmonic Study. A preliminary harmonic analysis shall be performed. A power system short-circuit ratio of 20 shall be assumed, with all VFDs operating at maximum speed and maximum load. Short-circuit current (ISC) utilized for harmonic analysis calculations is defined as:

I_{SC} = 10 * (sum of total full load amps of all VFD systems)

The Contractor shall submit the harmonic analysis at the time of bid, which includes all voltage and current harmonics up to the 49th.

2A.4 AVAILABILITY.

2A.4.1 Firing Signals. All internal firing signals, and other communications (which link operational controls with power components such as status and diagnostic signals) shall meet noise immunity and safety requirements as defined by applicable IEEE Standards.

2A.4.2 Failed Switch Bypass/Ride-Through Capability. The failure of any power switching device (SCR, GTO, diode, IGBT, IGCT, etc.) or switching device control shall not result in a process trip and shall allow for continued operation of each VFD system. Either N-1 or cell bypass is acceptable. In the event of a device or device control failure, a VFD shall annunciate and identify the specific location of the failed device and allow for continued operation until such time as repairs can be scheduled. The failure of any power switching device (SCR, GTO, diode, IGBT, IGCT, etc.) or switching device control shall not result in a channel trip and shall allow for continued operation of each VFD system with both channels in service. If one channel does trip Contractor shall state this in the proposal.

2A.4.3 Power Interrupt Ride-Through. Each VFD system shall be capable of continuous operation in the event of a power loss of 5 cycles or less.

Each VFD system shall be capable of automatically restarting in the event of a loss of power. Each VFD system shall provide IPSC with the choice of automatically restarting or not. The choice will be selected by the operator and retained by the control system until changed by the operator. IPSC shall be able to selectively apply this feature and have the ability to set the allowable restart time applicable to some (but not necessarily all) conditions as determined by IPSC to be appropriate for the specific application.

2A.4.4 Power Sag Ride-Through. Each VFD system shall be capable of continuous operation with a thirty (30) percent voltage sag on the input power line.

IP7014378

2A.4.5 "Catch-A-Spinning-Load" Capability. Each VFD system shall be able to catch and take control of a spinning load if started while rotating equipment is already spinning. Appropriate safeguards shall be included in this operation to prevent damaging torque(s), voltages, or currents from impacting any of the equipment. IPSC shall have the option of employing this feature or disabling it.

2A.4.6 Auto Restart Capability. Each VFD system shall be capable of automatically restarting in the event of an undervoltage trip. Each VFD system shall provide IPSC with the choice of automatically restarting or not. IPSC shall be able to selectively apply this feature to some (but not necessarily all) conditions as determined by IPSC to be appropriate for the specific application.

2A.4.7 Ground Fault Withstand. In the event of a ground fault, a VFD shall be capable of annunciating the ground fault condition, safely operating and, by Purchaser selection, either trip or continue operation. As a result of a ground fault trip, a VFD shall be capable of being reset and begin operating normally again after the ground fault condition has been corrected. There shall be no risk of fire or electric shock as a result of the ground fault.

2A.5 SERVICEABILITY/MAINTAINABILITY.

2A.5.1 Front Access. It is preferred that each system of channel be be designed for front access only. Contractor shall state in his proposal if rear or side access is required. An explanation of reason for any required rear or side access shall be given.

2A.5.2 Power Component Accessibility. All power components in the converter sections shall be mounted on a swing frame or rack-out for ease of maintenance and to minimize repair downtime. Alternate access options shall be described in the Proposal for the Engineer's review and evaluation.

2A.5.3 Voltage Isolation. All low voltage components, circuits, and wiring shall be separated with physical barriers from any sources of medium voltage.

2A.5.4 Remote Diagnostics. Each VFD system shall be provided with the capability for remote diagnostics via modem communication or Ethernet link.

2A.5.5 Marking/Labeling. Sleeve type wire marker tags or other acceptable means of permanent identification shall be applied to power and control wiring. Individual nameplates shall be provided for all major components of a VFD system.

2A.5.6 Mean Time to Repair (MTTR). The VFD design shall demonstrate an actual mean time to repair of less than 15 minutes in the event of any power switching component failure.

IP7014379

2A.6 PHYSICAL REQUIREMENTS.

2A.6.1 Environmental Requirements. Each VFD system shall be capable of continuous operation in an average ambient temperature between -10°C and 50°C at an elevation up to 4,700 feet above mean sea level without derating. Each VFD system shall also be simultaneously suitable for continuous operation in a maximum humidity between 0 and 95 percent noncondensing.

2A.6.2 Heat Dissipation/Cooling System. Each VFD system shall be air-cooled unless air-cooling is unavailable or impractical, in which case liquid cooling shall be provided. The existing system is air cooled and it is desirable to reuse the existing system. If liquid cooling is required Contractor shall furnish the heat exchangers and any and all modifications to the building wall to accommodate them.

2A.6.3 Air-Cooling Requirements. Air-cooled VFDs shall be provided with 100% fan redundancy and automatic switchover in the event of a fan failure for enhanced reliability. If a fan fails, the system shall automatically switch to the alternate fan and generate an alarm to notify operator of initial fan system failure. The drive shall have ability to detect failed operation of the cooling system (using temperature detectors as the only protection against loss of fan system is not acceptable). During normal operation, the system shall periodically cycle between the two fan systems to "exercise" them and prevent drying out of bearings, seals, etc., and to ensure availability of all systems. The Contractor shall provide with his proposal heat dissipation data necessary to verify existing HVAC systems or design new HVAC systems.

2A.6.4 Liquid-Cooling Requirements. Liquid-cooled VFDs shall be provided with 100 percent redundant pumps and heat exchangers with automatic switchover in the event of a pump or heat exchanger failure. Redundant systems shall be provided such that a cooling system can be taken out of service for maintenance or repair without taking a drive out of service.

The system shall be arranged for an external liquid-to-air heat exchanger for mounting on a deck engineered, designed, and furnished as a complete system by the Contractor

A minimum of 90 percent of the heat generated (losses) by the drive system shall be removed through the liquid cooling system. The Contractor shall provide heat dissipation data necessary to design all auxiliary cooling systems and utilities. The system shall be designed so that a failed pump can be safely isolated and repaired while a VFD system remains in service. Cooling pump motors shall have sealed bearings for long, maintenance free life.

Liquid-to-air heat exchangers shall be furnished and installed outdoors on a deck attached to the control building by the Contractor. The Contractor shall furnish piping and power and control wiring between each VFD and the heat exchanger. The cooling system shall be filled following installation of the drive. Coolant liquid shall be furnished by the Contractor.

IP7014380

The cooling system shall consist of two circuits. One internal circuit where deionized water is used and one exterior circuit where propylene glycol is used to provide an ambient service temperature range of -35°C to +50°C. Ethylene glycol is NOT acceptable due to environmental and hazardous material concerns.

Quick disconnect fittings shall be provided at each connection between the header and the supply hose.

Dissimilar metals shall be completely avoided in cooling liquid piping. Plastic piping is not acceptable. The use of threaded connections shall be minimized. All connections and fittings shall be designed based upon the system cooling fluid, the required flow, and shall be tested at two times the normal system design operating temperature and pressure.

Each VFD cooling system shall maintain system coolant temperature within a safe minimum and safe maximum temperature to avoid thermal shock and/or condensation.

2A.6.5 Enclosure. All VFD system components, including transformer (for PWM drives), shall be mounted and wired by the Contractor in a grounded enclosure meeting the following requirements without exception.
Input filters, transformer, power conversion, output filters and auxiliary equipment enclosure sections shall be NEMA 12 design. Air-cooled units shall be NEMA 12 Ventilated, with gasketed doors. Liquid-cooled units shall be NEMA 12 Nonventilated. Air-cooled units shall have changeable filters covering all air inlets. Filters shall be front replaceable (for replacement) while each VFD is in operation without exposing maintenance personnel to any of the power components.
Microprocessor and control logic boards and their power supplies shall be housed in a sealed, nonventilated NEMA 12 section, safely accessible without exposure to high voltages and without drive shutdown. All low voltage wiring shall be fully isolated from medium voltage compartments by metal barriers.

Cabinets and doors shall be fabricated using heavy gauge steel (12 gauge minimum) for sturdy construction and dimensional integrity to assure long-term fit and function. All doors shall be gasketed to provide environmental protection and secure fits.

Enclosures shall be designed to avoid harmonic and inductive heating effects. The enclosure shall be designed to shield any outside equipment from interference, enclosing and shielding the complete component to eliminate any radio frequency interference in compliance with FCC Part 18 requirements.

2A.6.6 Installation/Cabling. IPSC will set the VFD equipment in place and install interconnecting wiring. The Contractor's proposal shall include a detailed description of installation requirement .

IP7014381

2A.6.7 Space Limitations - Footprint. The Contractor shall provide a proposed layout of equipment with the proposal. Floor plans of the existing control building are included.

2A.6.8 Interlocks. Mechanical key interlocks shall be provided on all doors. Interlocking shall be fully coordinated to prevent access to all high voltage compartments, including transformer, filters, or any switchgear that is part of the supply, when line power is applied to each VFD systemInterlocks shall be mechanical to provide positive lockout prevention and safety. Electrical interlock switches alone are not acceptable due to the possibility of inadvertent shutdown and the ease with which such switches could be bypassed.

2A.6.9 Control Power and UPS System. The Contractor's proposal shall include a detailed description of control and accessory power requirements for his proposed system.

2A.6.10 Space Heaters. The power/control assembly including individual compartments shall be provided with space heaters to prevent condensation of moisture within the enclosures. The heaters shall be spaced away and thermally insulated from any painted surfaces.

Space heater capacity shall be as required to maintain the compartment internal temperature above the dew point.

Voltage normally applied to the space heaters will be 120 volts ac. Space heater voltage rating shall be 120 volts ac.

IPSC will provide a 2 wire, 120 volt, 60 hertz space heater supply feeder to each assembly. The Contractor shall provide all required internal wiring and suitable branch circuit protection for each space heater circuit.

All space heaters shall be controlled by an adjustable thermostat, factory set to close at 85° F (ON) and to open at 95° F (OFF).

2A.7 PROTECTIVE DEVICES/DIAGNOSTICS.

2A.7.1 Power Component Protection. Each VFD system shall include intermediate class surge arresters to protect the input transformer and VFD against voltage surges.

Each VFD system shall include protection to the converter rectifier devices to protect the secondary of the transformer from any potentially harmful fault currents. Arrangements that involve coordinated protection with an input circuit breaker are not as desirable and, if proposed, the Contractor shall furnish all coordinating elements, including the circuit breaker itself, and shall furnish a detailed description of the protection scheme with the proposal.

2A.7.2 Protective Features and Circuits. The controller shall include the following alarms and protective features:

IP7014382

Static instantaneous overcurrent and overvoltage trip.

Undervoltage and power loss protection.

Overtemperature protection.

Electronic motor inverse time overload protection.

Motor overspeed.

Each VFD system shall be protected from damage due to the following, without requiring an output contactor:

Single-phase fault or 3-phase short circuit on VFD system output terminals.

Failure to commutate inverter thyristor due to severe overload or other conditions.

Loss of input power due to opening of VFD input disconnect device or utility power failure during VFD operation.

Loss of one phase of input power.

Each VFD shall be able to withstand the following fault conditions without damage to the power circuit components:

2A.7.3 Data Displays. A door mounted LCD display shall be furnished, capable of displaying VFD operational status and drive parameters. The digital display shall present all diagnostic message and parameter values in plain language engineering units when accessed, without the use of codes.

As a minimum, the following door mounted digital indications shall be supplied:

Speed demand in percent.

Actual speed.

Input current in amperes.

IP7014383

Output current in amperes.

Output frequency in hertz.

Input voltage.

Output voltage.

Total 3-phase kW output.

Kilowatt-hour meter.

Elapsed time running meter.

2A.7.4 Diagnostics and Fault Recording. The control logic section shall be fully digital and not require analog adjustment pots or fixed selector resistors.

Fault log data storage memory shall be stored in nonvolatile memory or be supported by a UPS sized to provide a minimum 48 hour data retention.

Each VFD shall include a comprehensive microprocessor based digital diagnostic system, which monitors its own control functions and displays faults and operating conditions.

A "FAULT LOG" shall record, store, display, and print, upon demand, the following for the 50 most recent events:

VFD mode (auto/manual).

Date and time of day.

Type of fault.

Reset mode (auto/manual).

A "HISTORIC LOG" shall record, store, display, and print, upon demand, the following control variables at an adjustable time interval for the 50 intervals immediately preceding a fault trip and 100 intervals following such trip:

VFD mode (manual/auto/inhibited/tripped/etc.).

Speed demand.

VFD output frequency.

IP7014384

Demand (output) amps.

Feedback (motor) amps.

VFD output volts.

Type of fault.

Drive inhibit (on/off).

The fault log record shall be accessible via a fiber-optic link as well as line by line on the keypad display.

One laptop PC, printer, and a "Windows 95 or newer based" graphical tool suite shall be provided with the VFDs. This graphical PC tool shall be able to plot and display up to eight different VFD parameters and have the ability to freeze plotting and print hard copy versions of the plots. Capability to display at least eight different VFD system parameters is required, and all parameters displayed on the PC tool shall be synchronized with the standard keypad display.

2A.8 PROGRAMMING AND COMMUNICATIONS.

2A.8.1 User Input/Keypad. The door of each unit shall include manual speed device, a mode selector marked "Manual/Automatic," a "POWER ON" light, a VFD "FAULT" light, a VFD "RUNNING" light, start push button, stop push button, and reset push button.

A door mounted keypad with integral digital LCD display shall be furnished, capable of controlling a VFD and setting drive parameters. The display shall present all diagnostic message and parameter values in standard engineering units when accessed, without the use of codes. The keypad shall allow the operator to enter exact numerical settings in standard engineering units. A plain language user menu (rather than codes) shall be provided in software as a guide to parameter setting.

Drive parameters shall be factory set in nonvolatile EEPROM registers and resettable in the field through the keypad. Multiple levels of password security shall be available to protect drive parameters from unauthorized personnel. The EEPROM stored drive variables shall be able to be transferred for programming of new or spare boards. System shall allow programming changes while in service.

The keypad module shall contain a "self-test" software program that can be activated to verify proper keypad operations.

Each VFD system shall have the user selectable option of programming up to three speed avoidance bands. This gives the user the ability to block out and prevent operation at any

IP7014385

undesirable speed, such as one that may be coincident with a mechanical resonance condition.

2A.8.2 Hard-Wired Communication. The Contractor shall provide five additional analog, 10 additional digital inputs, and 10 additional digital outputs for connection to IPSC's plant control system for each VFD drive. All trip and start commands from IPSC's plant control system shall be hard-wired. A listing of the existing hardwired control signals is included at the end of this section. A copy of the existing schematics will be provided to the Contractor after the contract is awarded.

Contractor shall provide drive to drive communications and coordination of drives associated with each boiler. Certain parameters of this feature may be controlled by the operator.

2A.8.3 Serial Communication/Protocols/Modem or Cable. VFD shall be capable of direct communication to an IBM or compatible computer via fiber-optic link for setup of parameters, fault diagnostics, trending, and diagnostic log downloading. VFD parameters, fault log, and diagnostic log shall be downloadable for hard copy printout via the fiber-optic link and the standard serial printer.

Each VFD shall be provided with single port digital communication capability to allow status communication with the plant control system. Modbus communication protocol shall be provided.

An Ethernet communications link shall be provided for future use.

2A.9 COMPONENT REQUIREMENTS.

2A.9.1 Printed Circuit Boards. All printed circuit boards shall be new. They shall be coated for moisture and chemical resistance, in addition to any dielectric coating properties. All boards shall be tested in accordance with Article 2A.12.

2A.9.2 Power Bus and Wiring. Main power bus shall be high conductivity copper and plated for chemical and corrosion resistance and low losses. Bus shall be appropriately sized for the VFD continuous current rating and braced to withstand the mechanical forces caused by a momentary short-circuit current of 32 kA at 6900V. All connections shall be bolted or continuously welded.

2A.9.3 Ground Connection. Corrosion resistant grounding pads shall be provided in each power cubicle. A copper ground bus shall be provided for grounding of control circuits.

2A.9.4 Input Isolation Transformer. Each VFD system shall use a drive isolation transformer to provide common mode voltage protection and phase shifting. The existing input transformers may be used if adequate. If new transformers are proposed, they shall be as specified in Section 2B.

IP7014386

2A.9.5 DC Link Inductors. Dc link inductors if required shall be air core to prevent saturation. Separate inductors (split dual winding type) shall be provided in the positive and negative legs of the dc link to minimize stray magnetic fields. Maximum temperature rise shall not exceed 115° C with minimum 220° C insulation and overtemperature protection. To minimize cabling costs, the inductors shall be integral to each VFD system lineup. If it is not possible to integrate the inductors into each VFD system enclosure, the cabling and connecting shall be entirely furnished by the Contractor, and approved by the Engineer. Inductors shall meet the requirements of ANSI C57.16 and shall be designed to prevent saturation under maximum fault current conditions.

2A.9.6 DC Link Capacitors. Capacitors used in the converter dc link shall be integral to each VFD system lineup to minimize cabling costs.

Capacitors used in the converter dc link shall contain discharge resistors and shall be capable of reducing the residual charge to 50 volts or less within 5 minutes after the capacitor is disconnected from the source of supply.

2A.9.7 Input Harmonic Filters. If after meeting the requirements of Article 2A.2, harmonic filters are still required to meet power factor requirements, stricter local requirements, or telephone interference factor restrictions, the Contractor shall provide the filter, upstream filter isolation, protection, and protection coordination. As harmonic filters are power system dependent, the Contractor is responsible for maintaining and providing any required upgrades required during the warranty period at no cost to IPSC. To minimize cabling costs, the harmonic filter components shall be integral to each VFD system lineup, but isolated from other components, such that they can be disconnected from the power source and accessed for maintenance/repair while each VFD is in operation. If it is not possible to integrate the filters into each VFD system enclosure, the cabling and connecting shall be entirely furnished by the Contractor, and approved by the Engineer. Harmonic filters shall be located on the primary side of the input isolation transformer and shall be switchable with the VFD, to prevent their remaining on the power line in the event of a VFD trip, which could create a damaging leading power factor condition. The complete filter shall have independent protection for overcurrent, phase differential, and ground fault.

Any inductors used shall be iron core or air core with a maximum temperature rise of 115° C with minimum 220° C insulation and overtemperature protection. Reactors shall be designed to prevent saturation under maximum fault current conditions. Reactors shall meet the requirements of ANSI C57.16.

Capacitors used in the harmonic filter banks shall meet the requirements of IEEE 18 and IEEE 1036 for shunt power capacitors. Capacitors used in any harmonic filter banks shall be provided with a method of shorting the phases to ground once power has been removed and the capacitors have been discharged to a safe voltage level.

IP7014387

2A.9.8 Output Filters. If an output filter is required to meet the output harmonics requirements of this specification, or to meet any special requirements of the application, they shall be fully incorporated into each VFD system design. To minimize cabling costs, the output filter components shall be integral to each VFD system lineup. If it is not possible to integrate the output filters into each VFD system enclosure, the cabling and connecting shall be entirely furnished by the Contractor, and approved by the Engineer.

Any inductors used shall be iron core with a maximum temperature rise of 115° C with minimum 220° C insulation and overtemperature protection. Reactors shall be designed to prevent saturation under maximum fault current conditions. Reactors shall meet the requirements of IEEE C57.16.

Capacitors used in the harmonic filter banks shall meet the requirements of IEEE 18 and IEEE 1036 for shunt power capacitors. Capacitors used in any harmonic filter banks shall be provided with a method of shorting the phases to ground once power has been removed and the capacitors have been discharged to a safe voltage level.

Where potential exists for self-excitation between the output filter and the motor system, a fully (voltage and current) rated output contactor shall be provided by the Contractor as part of each VFD system delivery.

2A.9.9 Input Power Terminations. Input and output power connections shall be made to isolated, supported, and plated bus strap connections. Sufficient space shall be provided for termination connections from the top or the bottom of each VFD cubicle. Space provisions shall be provided for application of standard stress cones, and provisions shall be provided for grounding of shielded cabling.

2A.10 OUTPUT CONTACTOR OR SWITCHGEAR. Each VFD output section shall contain a suitably rated load break disconnect switch interlocked with the door. This switch shall isolate a VFD for maintenance and service. For safety, blade position shall be visible through the door. The disconnect switch shall be integrated into each VFD system so as to appear as a single integrated package. The switch shall be electrically interlocked with a contact from the drive input circuit breaker to prevent the switch from changing positions while the input circuit breaker is closed. This switch shall consist of dead front, completely metal enclosed vertical sections containing isolation switches or breakers. The door shall be interlocked with the switch so that (a) the switch must be opened before the door can be opened and (b) the door must be closed before the switch can be closed. There shall be a provision for padlocking the switch in either the open or closed position. The switch shall have permanent "open" and "closed" switch position indicators. The switch shall have a quick-make, quick-break mechanism providing isolation. Insulating barriers shall separate each phase and between the outer phases and the enclosure. All switches shall comply with ANSI C37.20.3, ANSI C37.22, ANSI C37.57, ANSI C37.58, NEMA SG5, and UL Standards.

IP7014388

2A.12 TESTING.

A no load test shall be performed on the system. The drive shall be connected to an unloaded motor and feed back signals shall be verified. Output voltage shall be calibrated. All logic and interlocks, including customer logic and instrumentation, shall be tested.

The drive shall be given a full power test at rated current and rated voltage (simultaneously) for a minimum of 4 hours (or until all system temperatures stabilize, whichever is longer). This test shall be performed as an integrated system including all supplied input switchgear, input transformer, input filter (if supplied), power section, and output filter (if supplied). The Contractor shall perform the factory system test to verify that total system efficiency, power factor, and harmonic distortion limits are met as specified. Total system efficiency shall be measured using watt meters or Multilin PQM or approved equivalent meters on both the input and the output of the complete system. System shall not be shipped unless performance criteria are met. Certified test data of all tests conducted shall be provided with final documentation.

The testing may be witnessed by the Engineer and/or Purchaser. A projected test schedule and a copy of proposed test procedures shall be provided at least 1 month in advance of test date. The Engineer shall be given at least 1 week's notice or confirmation of actual test date(s).

2A.13 DELIVERY. VFD system shall be delivered to the site preassembled and wired with all specified interconnecting wiring and cable. Cabling for connection across shipping splits shall be neatly coiled and identified. Exposed sections of equipment shall be fully protected from damage during shipment. All necessary hardware for reconnecting shipping splits shall be provided.

Setting equipment in place, aligning, and anchoring will be done by others. The Contractor shall supervise all system interconnections across shipping splits at the site.

Complete instructions for handling and storage shall be provided prior to delivery of the equipment. All equipment shall have adequate provisions for handling by overhead crane or forklift truck.

2A.14 TRAINING. The Contractor shall provide an onsite training school for Purchaser's operations, maintenance, and service personnel (15 total). The training school shall include classroom discussion on the theory of operation of the equipment, as well as maintenance and service methods for the purchased equipment. Topics covered shall include safety, hardware layout and functions, power and control wiring, diagnostic indicators, keypad/display interface, software mapping, programming, setup, configuration, control loop tuning, operational indicators, faults, diagnostic tools, troubleshooting, and preventive maintenance. Hands-on training shall be provided on equipment of the same design as that provided. Documentation shall be provided, and shall include actual manuals for the

IP7014389

equipment and drawings and schematics of equipment supplied for this project. Purchaser reserves the right to video tape all training secessions.

2A.15 STARTUP. The Contractor shall provide the field services of a factory technician as necessary to supervise/inspect installation, test, and start up all equipment provided as part of the fixed price proposal. The firm price shall include all travel and living expenses in addition to the startup engineer's time required to complete supervision of the installation, testing and startup as indicated in Section 1A. All equipment required for testing, startup, and performance verification shall be provided by the startup technician. The Contractor shall furnish all required startup spare parts.

Verification of VFD input harmonic voltage and current distortion limits specified shall be verified at rated speed and rated power as part of final startup and acceptance. A recording type Fluke, Multilin PQM, BMI, or equivalent harmonic analyzer displaying individual and total harmonic currents and voltages shall be utilized.

IP7014390

	SYSTEM DESCRIPTION	FILE NO. 9255.93.1405
	INDUCED DRAFT (CCE)	IPP 121284-1

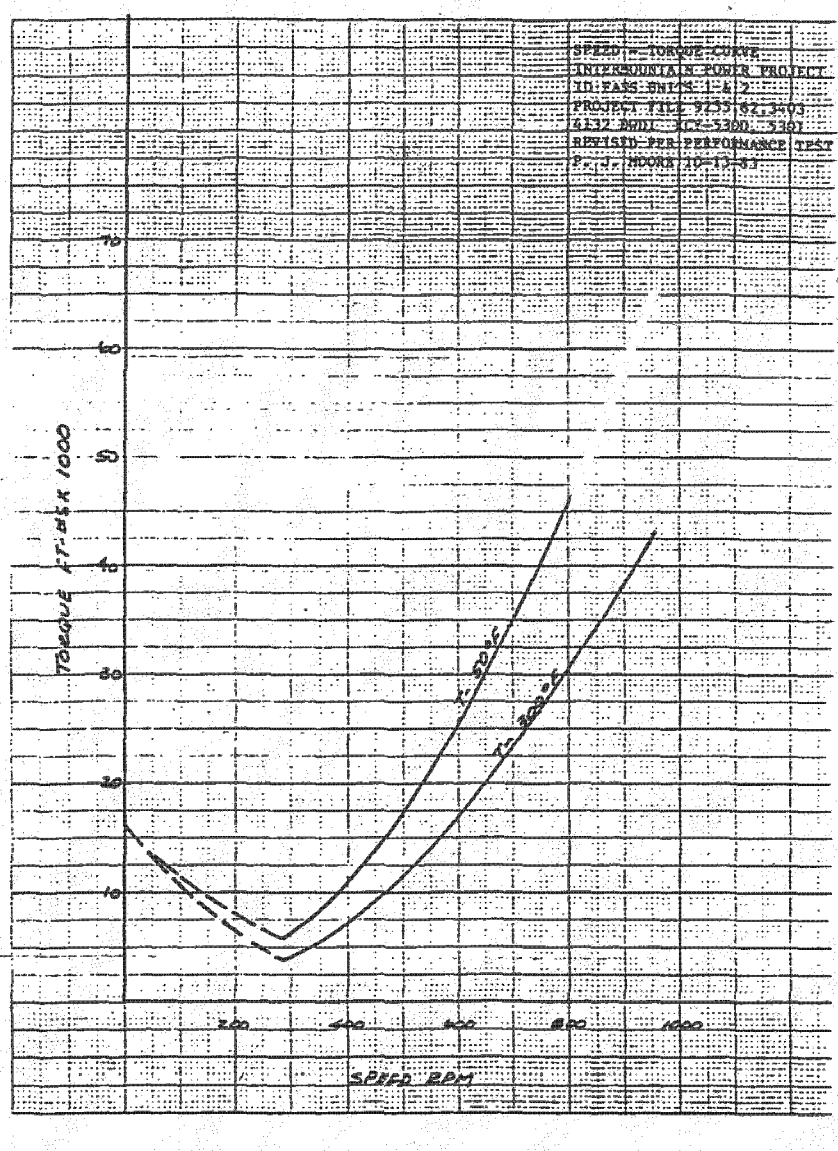

INDUCED DRAFT FAN
SPEED-TORQUE CURVE
FIGURE 3-3

IP7014391

EXISTING HARDWIRED CONTROL SIGNALS LIST

DEVICE	TYPE	SWITCH	DESCRIPTION	POWER SOURCE	POINT NAME	SIGNAL
CONTACTOR	DI		INDUCED DRAFT FAN CONTACTOR 1A2 CLOSED	ID FAN 1A REMOTE I/O POWER	10234	120 VAC
CONTACTOR	DI		INDUCED DRAFT FAN CONTACTOR 1A1 OPEN	ID FAN 1A REMOTE I/O POWER	10235	120 VAC
CONTACTOR	DI		INDUCED DRAFT FAN CONTACTOR 1A2 OPEN	ID FAN 1A REMOTE I/O POWER	10233	120 VAC
CONTACTOR	DI		ID FAN CONT 1A1 DISCONN KEY SW PERMIT TO CLOSE BKR	FIELD POWER		125 VDC
CONTACTOR	DI		SWGR POWER OFF (GREEN LIGHT)	FIELD POWER		125 VDC
CONTACTOR	DI		ID FAN FEEDER BKR TRIP PUSH BUTTON	FIELD POWER		125 VDC
CONTACTOR	DI		INDUCED DRAFT FAN CONTACTOR 1A1 CLOSED	ID FAN 1A REMOTE I/O POWER	10236	120 VAC
CONTACTOR	DI		ID FAN FEEDER BKR DOOR SWITCH	FIELD POWER		125 VDC
CONTACTOR	DI		SWGR POWER ON (RED LIGHT)	FIELD POWER		125 VDC
CONTACTOR	DI		ID FAN CONT 1A1 DISCONN KEY SW TRIP SURGE BKR	FIELD POWER		125 VDC
MOTOR	AI	TE-946	ID FAN 1A MOTOR INBD BEARING TEMPERATURE			4-20 MA
MOTOR	AI	TE-681	ID FAN 1A MOTOR INBD BEARING TEMPERATURE			4-20 MA
MOTOR	AI	TE-685	ID FAN 1A MOTOR OUTBD BEARING TEMPERATURE			4-20 MA
MOTOR	AI	TE-986	ID FAN 1A MOTOR WINDING TEMPERATURE			4-20 MA
MOTOR	AI	TE-942	ID FAN 1A MOTOR WINDING TEMPERATURE			4-20 MA
MOTOR	AI	TE-980	ID FAN 1A MOTOR OUTBD BEARING TEMPERATURE			4-20 MA
MOTOR	DI	TS-603	XFMR 1A1 TEMP HI-HI	ID FAN 1A REMOTE I/O POWER	10179	120 VAC
MOTOR	DI	TS-602	XFMR 1A1 TEMP HI-HI	ID FAN 1A REMOTE I/O POWER	10179	120 VAC
MOTOR	DI	TS-604	1A2 XFMR HI-HI	ID FAN 1A REMOTE I/O POWER	10180	120 VAC
MOTOR	DI	TS-601	XFMR 1A1 TEMP HI-HI	ID FAN 1A REMOTE I/O POWER	10179	120 VAC
MOTOR	DI	PS-426	ID FAN 1A MOTOR AIR FILTER DIFF PRESS HI	ID FAN 1A REMOTE I/O POWER	10178	120 VAC
MOTOR	DI	TS-606	1A2 XFMR HI-HI	ID FAN 1A REMOTE I/O POWER	10180	120 VAC
MOTOR	DI	TS-605	1A2 XFMR HI-HI	ID FAN 1A REMOTE I/O POWER	10180	120 VAC
VSD	DI		ID FAN VARIABLE SPEED DRIVE 1A2 FDR BRKR CLOSED		10129	
VSD	DI		ID FAN VARIABLE SPEED DRIVE 1A2 CONTACTOR	ID FAN 1A REMOTE I/O POWER	10232	120 VAC
VSD	DI		ID FAN VARIABLE SPEED DRIVE 1A1 TURNING GEAR SPEED	ID FAN 1A REMOTE I/O POWER	10225	120 VAC
VSD	DI		ID FAN VARIABLE SPEED DRIVE 1A2 FDR BRKR CLOSED		10130	
VSD	DI		ID FAN VARIABLE SPEED DRIVE 1A1 CONTACTOR	ID FAN 1A REMOTE I/O POWER	10244	120 VAC
VSD	DI		ID FAN VARIABLE SPEED DRIVE 1A1 ZERO SPEED	ID FAN 1A REMOTE I/O POWER	10227	120 VAC
VSD	DI		ID FAN VARIABLE SPEED DRIVE 1A2 MIN SPEED 150 RPM	ID FAN 1A REMOTE I/O POWER	10226	120 VAC
VSD	DI		ID FAN VARIABLE SPEED DRIVE 1A1 FAN CONTROL RUN			
VSD	DI		ID FAN VARIABLE SPEED DRIVE 1A2 ZERO SPEED	ID FAN 1A REMOTE I/O POWER	10227	120 VAC
VSD	DI		ID FAN VARIABLE SPEED DRIVE 1A2 TROUBLE	ID FAN 1A REMOTE I/O POWER	10228	120 VAC

IP7014392

DEVICE	TYPE	SWITCH	DESCRIPTION	POWER SOURCE	POINT NAME	SIGNAL
VSD	DI		ID FAN VARIABLE SPEED DRIVE 1A2 FDR BRKR OPEN		10134	
VSD	DI		ID FAN VARIABLE SPEED DRIVE 1A2 TRNGR SPD COMMAND		10131	
VSD	DI		ID FAN VARIABLE SPEED DRIVE 1A2 NORM SP COMMAND		10132	
VSD	DI		ID FAN VARIABLE SPEED DRIVE 1A2 TURNING GEAR SPEED	ID FAN 1A REMOTE I/O POWER	10225	120 VAC
VSD	DI		ID FAN VARIABLE SPEED DRIVE 1A2 READY	ID FAN 1A REMOTE I/O POWER	10231	120 VAC
VSD	DI		ID FAN VARIABLE SPEED 1A1 DRIVE READY	ID FAN 1A REMOTE I/O POWER	10243	120 VAC
VSD	DI		ID FAN VARIABLE SPEED DRIVE 1A1 REFERENCE FAILURE			
VSD	DI		ID FAN VARIABLE SPEED DRIVE 1A1 TROUBLE	ID FAN 1A REMOTE I/O POWER	10229	120 VAC
VSD	DI		ID FAN VARIABLE SPEED DRIVE 1A1 FAN CONTROL OFF			
VSD	DI		ID FAN VARIABLE SPEED DRIVE 1A1 MIN SPEED 150 RPM	ID FAN 1A REMOTE I/O POWER	10226	120 VAC
VSD	DO		ID FAN VARIABLE SPEED DRIVE 1A1 NORM SP COMMAND		00344	
VSD	DO		ID FAN VARIABLE SPEED DRIVE 1A1 FDR BREAKER OPEN		00345	
VSD	DO		ID FAN VARIABLE SPEED DRIVE 1A1 FDR BREAKER CLOSED		00341	
VSD	DO		ID FAN VARIABLE SPEED DRIVE 1A1 TRNGR SP COMMAND		00343	
VSD	DO		ID FAN VARIABLE SPEED DRIVE 1A1 BREAKER CLOSED		00346	
VSD	DO		ID FAN VARIABLE SPEED DRIVE 1A1 RUN COMMAND		00347	
VSD	DO		ID FAN VARIABLE SPEED DRIVE 1A1 OFF COMMAND		00342	
VSD	DI		ID FAN VARIABLE SPEED DRIVE 1A1 REGENERATIVE BRAKING			
VSD	AI		ID FAN VARIABLE SPEED DRIVE 1A1 SPEED CONTROL SIGNAL			
VSD	DO		MISCELLANEOUS ALARMS 1A1			
VSD	DI		ID FAN VARIABLE SPEED DRIVE 1A2 REGENERATIVE BRAKING			
VSD	AI		ID FAN VARIABLE SPEED DRIVE 1A2 SPEED CONTROL SIGNAL			
VSD	DO		MISCELLANEOUS ALARMS 1A2			

IP7014393

Section 2B - VFD ISOLATION (VFDI) TRANSFORMERS

Transformers for the VFD input shall be manufacture's standard and furnished as specified in this section. Each transformer shall be suitable for continuous operation at 100 percent of nameplate rating, with normal life expectancy, based on the specified ambient conditions.

This section describes the features of acceptable transformers. The bidder shall provide detailed information on what is being offered. Depending on whether liquid filled or dry type is being provided, the following clauses will then apply as appropriate. The bidder may propose alternate designs for consideration.

2B.1 INPUT ISOLATION TRANSFORMER. Each VFD system shall use a drive isolation transformer to provide common mode voltage protection and phase shifting (for 24 pulse or higher converter bridge, if employed to meet the power quality requirements of Article 2A.2.3).

Transformer design shall be a rectifier grade isolation type with a K Factor of 12 for variable torque loads or a K Factor of 20 for constant torque loads when applied to a SCR converter, in accordance with current EPRI recommendations and ANSI/IEEE Standard C57.110. A K Factor of 6 is required for diode rectifier converters. Transformers shall have a BIL rating in accordance with the requirements of ANSI/IEEE Standard C57.12.01.

If dry type construction transformers are required, they shall be AA rated to the base capacity of the VFD and provided with provisions for a fan-cooled system. If a FA transformer is supplied it shall be provided with one (1) redundant fan.

Transformer shall be supplied with electrostatic shield, electronic temperature monitoring with alarm and trip contact, auxiliary terminal box, distribution class surge arresters, and vibration dampers.

2B.3 DRY TYPE TRANSFORMERS. The insulating materials used shall be suitable for operation at a temperature of 220° C with a temperature rise limited to 115 ° C for conventional dry type transformers.
2B.3.1 Conventional Dry Type. The windings shall be sealed and protected using a Vacuum Pressure Impregnation (VPI) or encapsulation process. The preheated windings shall be subjected to a dry vacuum cycle, followed by a wet vacuum cycle during which time the windings are impregnated with an electrical grade varnish resin, polyester resin, or silicone resin. A pressure cycle shall then force the resin throughout the insulation. The windings shall then be cured to bind the resin to the insulation material, while eliminating voids which could create hot spots, partial discharge, or cause corona formation. This process shall

IP7014394

completely seal and protect the windings from moisture, dust, dirt, salt air, and other industrial contaminants.

2B.4 MECHANICAL CONSTRUCTION.

2B.4.2 Dry Type Transformers. All transformer enclosures, incoming sections, and outgoing sections shall have completely enclosed sheet metal bottoms. All side panels shall be removable. The ventilated enclosure shall be of heavy gauge sheet steel, and be suitable for outdoor or indoor operation.
Each transformer enclosure shall be gasketed and shall be provided with tops and shields required to prevent falling or dripping water from entering the enclosure. Each transformer enclosure, both interior and exterior shall be thoroughly cleaned, then given a rust resisting primer coat and two or more finish coats of enamel. The proposal shall include a complete description of the paint system.

External lifting eyes, or other means acceptable to the IPSC for handling of the complete transformer assembly, shall be furnished as part of each enclosure framework so that during movement of the unit its core and coils remain completely protected from damage or shifting.

The unit(s) shall also be constructed and supported such that movement in any direction on rollers will not damage or permanently distort the enclosure, frame, or internal apparatus.

2B.5 CORE AND COILS. The core and coil assembly shall be adequately braced to withstand short-circuit forces without damage or displacement, limited only by the transformer impedance. It shall also withstand normal moving and handling without the use of special shipping braces. Verification that short-circuit withstand tests have been performed on a prototype or identical transformer design shall be submitted.

For dry type, the core and coil assembly shall rest on vibration dampers designed to isolate core vibration from the enclosure.

The core shall be constructed of high-grade grain oriented silicon steel.

Standard values of impedance shall be used, unless otherwise required for the VFD system.

The basic impulse insulation level shall be inherent to the design, and is to be obtained without the use of supplemental surge arresters.

2B.6 DE-ENERGIZED TAPS. Unless otherwise specified in this section, the high voltage winding shall have four approximately 2-1/2 percent rated full-capacity de-energized taps, two above and two below rated primary voltage. A different tap setting is acceptable if required for the VFD system. For dry type, the tap connections shall be bolted, flexible

IP7014395

jumper, or rigid bar type, easily accessible by removal of one of the enclosure side panels. The tap position indicator and terminal markings shall be clearly visible and identical with those used on the transformer nameplate.

2B.7 FORCED COOLING. If a forced cooled rating is specified in the technical section of this section, the transformer shall be furnished with a complete forced air-cooling system, including cooling fans, fan support brackets, winding temperature controls, fan power supply transformers, circuit protective devices, wiring, terminal blocks, and control panel. The fan power supply transformers shall be factory wired to the low voltage side of the transformer. All current carrying parts shall be sized for the maximum FA rating.

2B.8 ACCESSORIES. Each transformer shall be furnished with the manufacturer's standard accessories including, as applicable to dry, the following:

- Two grounding pads.
- Stainless steel diagrammatic nameplate.
- Provisions for lifting and jacking.
- Dial or digital winding temperature indicator.
-

One set of SPDT alarm contacts shall be furnished on the winding temperature, All alarm contacts shall be wired to identified terminal points in the control compartment.

All accessories shall be clearly identified and described in the proposal.

2B.9 TERMINATION COMPARTMENTS. Each transformer shall include HV and LV termination compartments, if the transformers are not an integral part of the VFD lineup, in accordance with the following paragraphs.

2B.9.1 HV Compartments. HV termination compartments shall be metal-enclosed air insulated terminal chambers with gasketed and bolted covers. The compartments shall be large enough to accommodate working space for field installation of stress cones on HV cables that are shielded and to house other accessories specified, such as surge arresters. Enclosures shall be fabricated of electrogalvanized sheet steel or aluminum and painted in accordance with these specifications.

Indoor enclosures shall be dust-tight and impervious to dripping or failing water. Hardware shall be stainless steel or cadmium plated steel.

IP7014396

All exterior hardware for units located outdoors shall be stainless steel.

2B.9.2 LV Compartments. LV termination compartments shall be of the type specified in this section and in accordance with the following paragraphs.

The compartments shall be metal-enclosed air insulated terminal chambers with gasketed and bolted covers. Enclosures shall be fabricated of electrogalvanized sheet steel or aluminum and painted in accordance with these specifications.

Indoor enclosures shall be dust-tight and impervious to dripping or falling water. Hardware shall be stainless steel or cadmium plated steel.

All exterior hardware for units located outdoors shall be stainless steel.
Terminal compartments shall be one of the following:

Terminal compartments being provided that are "throat" connected to LV equipment shall be designed to connect directly to the specified equipment to form a complete assembly. All required hardware, bus splice plates, flexible connectors, etc., shall be provided.

Terminal compartments being provided that are connected to LV bus duct shall be designed to connect directly to the specified bus duct to form a complete assembly. All required flanges, gaskets, hardware, bus splice plates, flexible connectors, etc. shall be provided.

Terminal compartments being provided that are connected to LV cables shall be designed to accommodate field installation of the size and number of cables specified from the direction indicated in this section.

2B.10 FACTORY TESTING. Each transformer shall be completely assembled and tested at the factory in accordance with applicable standards and the manufacturer's standard practices, using materials and equipment that will be a part of the final assembled unit and receive the routine and design tests as dictated by the latest revision of the applicable standard. Certified test reports shall be supplied, summarizing the results of all tests. In particular, the calculated hottest spot temperature rises of the primary and secondary windings shall be shown.

Hottest spot temperature rises shall conform to the appropriate standard, and shall be calculated using mathematical models verified by thermal tests on test windings and/or a prototype transformer representative of the design family. Tests shall have been conducted at conditions of full load or conditions simulating full load. Complete data shall be available for IPSC's review.

The IPSC reserves the right to witness factory testing and shall be informed in writing at least 10 days prior to the scheduled starting date of tests so that arrangements can be made for a representative to be present.

IP7014397

2B.11 SCOPE OF SUPPLY. Provide input isolation transformers for configurations in which existing transformers are not suitable. These are not required on drives which include integral input transformers.

2B.12 SCHEDULE OF CONTRACT SUBMITTALS.

Submittal Item Activity (To be received no later than…)	Days After Award of Purchase Order
Outline Drawings	15
Schematic and wiring diagrams	30
Nameplate Drawings	15
Design data and performance curves	15
Certified test reports	15 days after tests are completed

2B.13 PERFORMANCE AND DESIGN TECHNICAL REQUIREMENTS.

Transformer name	VFD INPUT TRANSFORMER	ID Number	1CCE-XF-1A1, -1B1, -1C1, -1D1, -1A2, -1B2, -1C2, -1D2
Transformer type	Dry type	Quantity, each	1
Standard	ANSI/IEEE C57		
Self-cooled rating capacity	As required kVA		
Force-cooled rating capacity	Provisions kVA		
Primary voltage	6900 volts	Secondary voltage	As required volts
Primary insulation	45 kV BIL	Secondary insulation	Full kV BIL
Primary winding	Wye	Secondary winding	Wye-grounded/Delta
Primary termination compartment	Yes	Secondary termination compartment	Yes
Frequency	60 Hz		

IP7014398

Number of phases	3	
Average winding rise	115	°C
Cooling class	FA or OA/AA	
Enclosure type	NEMA 1	
Vector relationship	24 pulse	
HV de-energized taps	±2 x 2.5% or 1x±5%	
Sound level	75	dBA
Site altitude	4700 ft.	
Impedance	As required	%Z at self-cooled rating

Maximum ambient temperature	50	°C
Maximum monthly average ambient temperature	30	°C
Average annual ambient temperature	20	°C
Maximum 24 hour average ambient temperature	30	°C
Conductor material	Copper	
Paint system and color	Manufacturer's Standard	
Auxiliary ac power supply	120 Volt	
K-factor rating for nonsinusoidal loads	As required for service	
Neutral grounding	Solid	
Unusual operating conditions	VFD input	
Special accessories	Thermostat or Electronic Temperature Monitor	
Additional requirements	Space Heaters	

IP7014399

2B.14 REQUIRED BID SUBMITTALS.

Submittal Description

Complete description of proposed transformer

Preliminary outline Drawings showing, estimated weights, dimensions, , and locations of major accessories

Summary description of codes and standards used if different than specified including a review of major differences

Priced list of recommended spare parts

List of special and maintenance tools to be furnished

Bidder experience record with proposed equipment

List of factory routine tests

Complete description of the extent of shop assembly of components

2B.15 TECHNICAL DATA.

Manufacturer _____

Factory location _____

Quantity _____

Class and type of core

Phase

Type (, dry, , etc.) _____

Conductor material of each winding _____

kVA, self-cooled _____ kVA

kVA, force-cooled (top rating) _____ kVA

IP7014400

	_____	
High voltage winding	_____	kV
kV BIL	_____	kV BIL
Delta or wye	_____	
Taps	_____	
Low voltage winding	_____	c`
kV BIL	_____	kV BIL
Delta or wye	_____	
Taps	_____	
Average winding rise-HV	_____	° C
Insulation system maximum temp-HV	_____	° C
Insulation system maximum temp-LV	_____	° C
Cooling class	_____	
Frequency	_____	Hz
Enclosure type	_____	
Impedance	_____	%Z
Vector group	_____	
Maximum sound level	_____	dBA
	_____	
No-load losses	_____	kW
Load losses	_____	kW

IP7014401

Fan losses _____ kW

Efficiency at unity power factor _____
At full load _____
At 85 % load _____
At 75% load _____

K-factor rating _____

Total weight _____

Dimensions, L x W x H _____ x _____ x [ ]

_____

_____

HV winding description _____

LV winding description _____

Terminal compartment type _____

Accessories _____

IP7014402

Section 2C - MEDIUM VOLTAGE INDUCTION MOTORS

2C.1 GENERAL. This motor specification is applicable to all medium voltage, 3-phase, squirrel-cage induction electric motors.

2C.2 DESIGN AND CONSTRUCTION. Design and construction of each motor shall be as specified herein.

Motors shall be designed for use with a variable frequency drive

All motors shall be capable of continuous running duty.

2C.2.1 Nameplates. All motor nameplate data shall conform to the requirements of the standards listed in this section. The following additional nameplate data shall be included:

- Insulation system class designation.
- Maximum ambient temperature for which motor is designed and temperature rise by resistance.
- For motors with connections to an external lubricant recirculating system, or with an integral forced lubrication system, oil pressure and oil flow required. The existing motor and fan have an existing lube oil system. The existing motor requires 2.5 GPM at 20 PSIG per bearing. If the new motor requires more lube oil than available a new lube oil system shall be furnished.
- Type and grade of bearing lubricant, attached adjacent to lubricant filling devices.
- For motors with current transformers for differential protection, connection diagram indicating motor lead terminal connections.
- For motors with air filters, recommended set point for differential pressure device, attached on or near device enclosure.

All motor nameplates and attachment pins shall be corrosion-resistant metal.

2C.2.2 Enclosures. New motors shall match critical dimensions and weight of existing motors as shown on the reference drawings. An adapter sole plate is allowed. Enclosure parts for all motors (e.g., frames, bearing brackets, terminal housings, external fan covers)

IP7014403

shall be made of cast iron, cast steel, sheet steel, or steel plates. Aluminum enclosure parts are not acceptable.

Air filters are required and shall be removable from the outside of the motor and from the side only, not from the front or back. Replaceable type air filters shall be furnished.

Cooling fans, when provided, shall be bi-directional to allow for continuous motor operation in either a clockwise or counterclockwise direction. Specific cases where such a fan is impractical for mechanical reasons shall be brought to the attention of IPSC.

2C.2.3 Air Filter Pressure Differential Devices. A pressure differential device shall be provided at the air inlet of all motors furnished with air filters. The device shall be furnished with a snap-action sealed switch having one normally open and one normally closed contacts (Form C) which change state (close) on high-pressure differential. The switch shall have an adjustable set point which is accessible for calibration while the motor is in service. The initial adjustment shall be made at the motor supplier's factory. The purpose of the switch is to prevent motor excessive temperature by alarming clogged filters.

2C.2.4 Insulation and Windings. All stator coils shall utilize copper conductors, shall be form-wound, and shall be insulated with mica based materials. All stator winding materials shall have a Class F (155° C) thermal classification and shall utilize a vacuum pressure impregnation (VPI) system.

Motor windings shall be furnished with a fly ash resistant coating.

2C.2.5 Temperature Rise. The temperature rises at rated output shall not exceed those for a Class B thermal insulation classification.

2C.2.6 Space Heaters. All motors shall have space heaters. Heaters shall be located and insulated so they do not damage motor components or finish.

Space heaters shall be sized as required to maintain the motor internal temperature above the dew point when the motor is idle. Space heater below 1000 watts shall be rated at 240 volts for use on a 120 volt system. Heaters 1000 watts and above shall be rated at 480 volts for use on a three phase 208 volt system.

2C.2.7 Terminal Housings. A terminal housing for power leads and a separate accessory terminal housing for accessory leads shall be furnished on all motors. The existing motor conduits shall be reused.

All terminal housings shall be externally mounted on the motor frame enclosure. Terminal housings for all motors shall be cast iron or sheet steel. Minimum protection requirements shall be equivalent to NEMA 4 (IP 54).Type II motor terminal box shall be furnished.

IP7014404

All motor leads located in the housings shall be permanently marked for ease of identification.

A separate accessory terminal housing shall be provided for space heater leads, temperature detector leads, and other similar accessory equipment leads. It shall be complete with screw type terminal blocks for termination of such leads. Each terminal in the blocks shall be identified and marked for its respective leads. Accessory terminal housings shall be accessible from outside the motor.

When current transformers for motor differential protection are specified, the current transformers shall be mounted in the power lead terminal housing
Motor power lead terminal housings shall be large enough to provide working space for the field fabrication of stress relief kits for shielded cable within the housing and to contain the stress relief kits after fabrication. Type II terminal boxes shall be furnished.

Location and dimensions of terminal housings shall match the existing motor terminal box..

2C.2.8 Leads. All leads, including motor power leads, space heater leads, and temperature detector leads, shall be wired into their respective terminal housings.

All motors shall have the direction of rotation marked by an arrow mounted visibly on the stator frame near the terminal housing or on the nameplate and the leads marked for phase sequence to correspond to the direction of rotation and supply voltage sequence.

When current transformers for motor differential protection are specified for single-speed motors, the motor phase leads shall be wired to the motor power lead terminal housing for connection for self-balancing current type differential protection. Each current transformer shall encircle all power leads to the associated winding. The motor winding wye or delta connections shall be completed at the factory, leaving only three leads, TI, T2, T3 (U, V, W), for field connection in the power lead terminal housing. The wye or delta connection shall be completed in a manner, which will allow easy access to the end of each phase for field testing.

Cable motor leads shall utilize stranded copper conductors insulated with silicone rubber covered with a glass braid or acceptable equal.

2C.2.9 Bearings. The type of bearing furnished shall be determined by the motor supplier based upon the load, speed, and thrust conditions of the driven equipment.

IP7014405

2C.2.9.1 Sliding Type Bearings. Sleeve bearings for horizontal motors shall be oil ring lubricated type. The bearings, end bells, and bearing housings shall be split type when available. Air gap measurement holes or other acceptable means shall be provided in each motor end enclosure for checking air gap of sleeve bearing motors.

2C.2.9.2 Bearing Lubrication System. Motor shall be designed to use the existing pressurized bearing oil system

2C.2.9.3 Miscellaneous Bearing Requirements. All bearing mountings shall be designed to prevent the entrance of lubricant into the motor enclosure or dirt into the bearings and shall be provided with pipes and drain plugs.

Bearings and bearing housings shall be designed to permit disassembly in the field for inspection of the bearings or removal of the rotor.

All oil-lubricated bearings shall be provided with oil level sight glasses marked for required oil level at motor running and standstill. Plastic sight windows or bottles shall be of a material not adversely affected by continuous exposure to sunlight.

Insulation shall be provided to prevent circulation of shaft current on bearings, on bearing temperature detectors, or on oil piping connections.

Bearing lubricants shall contain a corrosion inhibitor. The type and grade of lubricant shall be indicated on a nameplate attached to the motor frame or end shield adjacent to the lubricant-filling device. The Contractor shall verify that the existing lubrication system to assure proper equipment startup and subsequent bearing maintenance.

2C.2.10 Oil Lubrication Systems. For the existing external lubricant recirculating system, the Contractor shall furnish pipe taps for oil inlet and outlet connections in addition to the internal lubricant recirculating system previously specified. The reused lubrication system shall maintain proper lubrication and cooling of the bearings over the complete speed range.

2C.2.11 Rotors. All induction motors shall have squirrel-cage rotors. Rotors shall be adequately sized to avoid overheating during acceleration of the motor and driven equipment. Rotors shall be copper or copper alloy cage material. All fabricated cage rotors shall include a swaging or wedging method during the installation of rotor bars to prevent rotor bar vibration.

All motor rotating components shall be dynamically balanced after mounting on the shaft. Motor vibration shall not exceed the peak-to-peak amplitude values listed in the following table. In addition, the magnitude of vibration values for twice the line frequency vibrations shall not exceed 0.0005 inches (0.013 mm).

IP7014406

Synchronous Speed, rpm	Maximum Amplitude, Inches, (mm) Peak-to-Peak
999 and below	0.001 (0.025)

The minimum clearance space required for removal of the rotor shall be indicated both in the proposal data and on the dimensional outline drawing.

2C.2.12 Shafts. All shafts shall be solid. Each shaft shall be furnished with a corrosion-resistant treatment or shall be made of a corrosion-resistant material.

The output shafts of motors furnished with sleeve bearings shall be circumscribed with permanent marks indicating the motor magnetic center and end float limits when level and running at rated speed. A permanent, identified reference point shall be indicated or attached to the bearing housing or shaft seal. The markings shall be easily identifiable for use during motor installation.

For horizontal sleeve bearing motors, the rotor end float and coupling end play shall be in accordance with NEMA requirements. The distance from the magnetic center line mark to each end float limit mark shall be not less than 37.5 percent of the total rotor end float.

2C.2.13 Grounding Pads. External grounding pads shall be provided in at least two locations (near mounting feet at opposite corners).

2C.2.14 Torque Characteristics. Breakaway, run-up/pull-up, and pull-out/breakdown torque shall at all times be at least 10 percent higher than the load-torque of the driven machine, at minimum specified starting voltage. Load-torque characteristics are specified in Section 2A and as shown on the speed torque curve in Article 2A.2.2; however, the responsibility for successful starting under the given conditions rests with the motor manufacturer.

2C.2.15 Quality Control Tests and Inspections. Each motor shall be tested and inspected at the manufacturer's factory to determine that it is free from electrical or mechanical defects and to provide assurance that it meets the requirements of these specifications. Test procedures shall be in accordance with IEEE, or NEMA, test procedures for 3-phase induction motors.

Copies of reports of the quality control tests and inspections for each motor shall be submitted prior to shipment of the motor from the manufacturer's factory.

The routine tests listed in NEMA shall be performed on each motor.

One of the motors shall have complete tests in accordance with IEEE Standard 112.

IP7014407

Additional tests shall be performed to determine the efficiency and power factor for each motor.

2C.2.16 Drawings and Engineering Data. Motor dimensional drawings shall include the following information in addition to the requirements listed hereinbefore:

- Complete nameplate data.
- Rotor weight and motor total weight.

2C.2.17 Couplings. The motor shaft shall be designed so that the existing motor half coupling can be transferred to the new motor and reused. The existing coupling shall be reconditioned such that the existing vibration dampening materials are replaced with new. Contractor has the option of furnishing a new coupling. If a new coupling is being proposed contractor shall provide coupling information in the proposal data.

2C.2.18 Soleplates. Existing sole plates shall be used however if an adapter plate is required Contractor shall furnish one that can be bolted directly to the existing sole plate. Contractor shall provide adapter information as part of his proposal.

2C.2.19 Critical Speeds. Motors shall be designed to keep torsional and rotational natural frequencies of vibration at least 25 percent above , the motor rated speed ranges to avoid resonant vibration over the operating speed range of the equipment-motor unit.

2C.2.20 Vibration Transducer Mounting. A vibration transducer mounting for field installation of a Purchaser-furnished vibration transducer shall be provided on the drive shaft bearing housing of the motor. The vibration transducer and monitoring equipment will be furnished under separate specifications.

2C.3 SCOPE OF SUPPLY. Provide squirrel cage induction motors for configurations in which existing motors are not suitable.

2C.4 SCOPE OF ERECTION/CONSTRUCTION. Motors must be constructed to replace existing motors on the existing foundation and on existing sole plates and all conduits.. Contractor shall include a detailed description of work required to mate new motor with existing fan and motor foundation. The written work description shall be submitted for review with the motor dimensional drawings and included in the instruction manuals. The work description shall be of sufficient detail to provide the installing contractor with all information needed to install the new motors and modify any of the existing equipment.

2C.5 SCHEDULE OF CONTRACT SUBMITTALS.

Days After Award of Purchase Order

IP7014408

Submittal Item Activity
(To be received no later than…)

Power factor and efficiency versus percent load curves for medium voltage motors	15
Motor dimensional drawings	15
Wiring diagrams	30
Motor nameplate data	20
Medium voltage motor rotor removal clearance drawings	15
Bearing disassembly and reassembly drawings	With Instruction Manual

2C.6 PERFORMANCE AND DESIGN REQUIREMENTS. This motor data sheet is applicable for motors with nameplate ratings:

Driven Equipment	B&V Tag Number	Quantity
I. D. Fan	1CCE-FAN-1A	1

Minimum Output Rating				
NEMA (hp)	Service Factor	IEC (kW)	Synchronous Speed (rpm)	Direction of Rotation*
8700	1.15	N/A	900**	CW/CCW

IP7014409

* Direction of shaft rotation shall be viewed from motor end opposite to motor output shaft and looking at the driven equipment. Contractor to coordinate direction of rotation with respective existing I.D. Fan.

** Motors shall be designed to operate continuously at 1050 RPM.

Horizontal shaft mounting arrangement - horizontally mounted motor

NEMA motor — Horizontal, single shaft extension

Rated voltage (volts) /frequency (hertz)	As Required
Maximum ambient temperature (° C)	50
Minimum ambient temperature (° C)	-35
Altitude	4700 ft
Efficiency, minimum	High Percent

Motors shall be manufactured to NEMA/ANSI

The following features shall be provided:

Feature	NEMA	
Enclosure/degree of protection	WP II	

Enclosure openings shall be covered with screens manufactured from the following materials:	Stainless
Air filters	Replaceable
No-load sound produced by the motor at 1 meter	80 dBA

IP7014410

Current transformers	If required
Stator winding temperature devices	RTDs - 10 ohm copper (2 per phase per winding)

Starting voltage range Minimum VFD percent Minimum VFD percent

Incoming power supply cable and terminations	Must match existing cables or cables required that will fit in existing conduits.
Anti-condensation space heaters	Space heater shall be provided..
Space heaters shall be energized at	120 V for heater , 1000 W and 208, 3Ø for heaters 1000W and above Volts

The following dollar value will be used to evaluate motor energy losses at driven equipment maximum brake horsepower (kW) as defined on the motor proposal data sheet:

Dollars (US)/kW	$1,275.00

Horizontal motors

Soleplates	Use existing soleplates.
Terminal box location, viewed from motor end opposite to motor output shaft	Match existing
Horizontal motor bearing type	Sleeve bearings forced oil lubricated

IP7014411

Bearing temperature detectors shall be furnished	On each motor sleeve bearing
Bearing temperature detectors shall be	Type E thermocouple
Bearing lubrication system	Oil rings
Bearing lubrication system cooling	Existing

Driven equipment characteristics

Driven equipment inertia	wk^2 - lb ft^2	388,240	
Synchronous speed required torque		954 rpm	
Starting load		Fan - Dampers Closed	

2C.7 ADDITIONAL REQUIREMENTS.

2C.7.1 Special Requirements. Special requirements beyond the established standards have been defined for this project.

Provided below are technical exceptions to, or deviations from, the requirements specified in the associated Technical Specifications for this equipment or service. These exceptions and deviations shall govern over the standard specifications only to the extent of the difference.

2C.7.2 Codes and Standards. Work performed under this specification shall be done in accordance with the following codes and standards. The version that is latest adopted, published, and effective at the date of this document shall apply unless specifically stated otherwise. These references shall govern the work except where they conflict with Purchaser specifications. In cases of conflict, the latter shall govern to the extent of such difference.

ANSI designed motors	NEMA MG1, ANSI C50.41, IEEE 112, IEEE 522

2C.7.3.1 Approved Manufacturers.

For the following components, only the listed manufacturers are recognized as maintaining the level of quality of workmanship required by these specifications. If the Contractor wants to propose a non-listed manufacturer that is considered to provide an equivalent level of

IP7014412

quality, this manufacturer must be identified and supporting testimony provided. Acceptance of the manufacturer as a substitute is at the discretion of IPSC.

Component	Manufacturer
Medium voltage induction motors	ABB Electric Machinery General Electric Reliance Siemens TECO - Westinghouse Motor Co. Toshiba

2C.8 REQUIRED BID SUBMITTALS. The following data shall be submitted for use in the evaluation of bids. The proposal will be considered incomplete until the required submittals are received.

Submittal Description

Overall size, weight, and configuration for each motor and arrangement of accessory items

Overall drawing showing center lines and major dimensions of each motor and minimum clearance space required for removal of the rotor shall be indicated on the dimensional outline drawing.

Efficiency versus percent load curves

Power factor versus percent load curves

Is a new coupling is being proposed, if provide coupling information, manufacturer and type.

Is an adapter plate being proposed, if so provide adapter information, size and dimensions.

Motor thermal limit curves

IP7014413

2C.9 TECHNICAL DATA.

Motor

Manufacturer _____

Model No. _____

Location of manufacture _____

Design standards (i.e., NEMA,) _____

Type and application _____

RPM maximum _____

Bearing temperature detectors _____

Winding temperature detectors _____

Insulation class _____

Driven equipment maximum brake HP _____

Motor nameplate horsepower _____

Service factor (NEMA motors only) _____

Motor losses when operating at the driven equipment maximum brake HP _____

_____

_____

Motor bearing type _____

Enclosure _____

Starting voltage range _____

Bearing lubrication system _____

Space heater rating, watts/voltage/phase _____ / _____ / _____

Minimum clearance required to remove rotor _____

Height _____

Length _____

IP7014414

	_____
Width	_____
Weight	_____
Stator	_____
Rotor	_____
Total	_____
Overall dimensions, including shaft extension	_____
Length	_____
Width	_____
Height	_____
Minimum clearance space required for rotor removal	_____
List of special tools that will be furnished	_____
Field assembly work required	_____

IP7014415

EXISTING HARDWIRED CONTROL SIGNALS LIST

DEVICE	TYPE	SWITCH	DESCRIPTION	POWER SOURCE	POINT NAME	SIGNAL
CONTACTOR	DI		INDUCED DRAFT FAN CONTACTOR 1A2 CLOSED	ID FAN 1A REMOTE I/O POWER	10234	120 VAC
CONTACTOR	DI		INDUCED DRAFT FAN CONTACTOR 1A1 OPEN	ID FAN 1A REMOTE I/O POWER	10235	120 VAC
CONTACTOR	DI		INDUCED DRAFT FAN CONTACTOR 1A2 OPEN	ID FAN 1A REMOTE I/O POWER	10233	120 VAC
CONTACTOR	DI		ID FAN CONT 1A1 DISCONN KEY SW PERMIT TO CLOSE BKR	FIELD POWER		125 VDC
CONTACTOR	DI		SWGR POWER OFF (GREEN LIGHT)	FIELD POWER		125 VDC
CONTACTOR	DI		ID FAN FEEDER BKR TRIP PUSH BUTTON	FIELD POWER		125 VDC
CONTACTOR	DI		INDUCED DRAFT FAN CONTACTOR 1A1 CLOSED	ID FAN 1A REMOTE I/O POWER	10236	120 VAC
CONTACTOR	DI		ID FAN FEEDER BKR DOOR SWITCH	FIELD POWER		125 VDC
CONTACTOR	DI		SWGR POWER ON (RED LIGHT)	FIELD POWER		125 VDC
CONTACTOR	DI		ID FAN CONT 1A1 DISCONN KEY SW TRIP SURGE BKR	FIELD POWER		125 VDC
MOTOR	AI	TE-946	ID FAN 1A MOTOR INBD BEARING TEMPERATURE			4-20 MA
MOTOR	AI	TE-681	ID FAN 1A MOTOR INBD BEARING TEMPERATURE			4-20 MA
MOTOR	AI	TE-685	ID FAN 1A MOTOR OUTBD BEARING TEMPERATURE			4-20 MA
MOTOR	AI	TE-986	ID FAN 1A MOTOR WINDING TEMPERATURE			4-20 MA
MOTOR	AI	TE-942	ID FAN 1A MOTOR WINDING TEMPERATURE			4-20 MA
MOTOR	AI	TE-980	ID FAN 1A MOTOR OUTBD BEARING TEMPERATURE			4-20 MA
MOTOR	DI	TS-603	XFMR 1A1 TEMP HI-HI	ID FAN 1A REMOTE I/O POWER	10179	120 VAC
MOTOR	DI	TS-602	XFMR 1A1 TEMP HI-HI	ID FAN 1A REMOTE I/O POWER	10179	120 VAC
MOTOR	DI	TS-604	1A2 XFMR HI-HI	ID FAN 1A REMOTE I/O POWER	10180	120 VAC
MOTOR	DI	TS-601	XFMR 1A1 TEMP HI-HI	ID FAN 1A REMOTE I/O POWER	10179	120 VAC
MOTOR	DI	PS-426	ID FAN 1A MOTOR AIR FILTER DIFF PRESS HI	ID FAN 1A REMOTE I/O POWER	10178	120 VAC
MOTOR	DI	TS-606	1A2 XFMR HI-HI	ID FAN 1A REMOTE I/O POWER	10180	120 VAC
MOTOR	DI	TS-605	1A2 XFMR HI-HI	ID FAN 1A REMOTE I/O POWER	10180	120 VAC
VSD	DI		ID FAN VARIABLE SPEED DRIVE 1A2 FDR BRKR CLOSED		10129	
VSD	DI		ID FAN VARIABLE SPEED DRIVE 1A2 CONTACTOR	ID FAN 1A REMOTE I/O POWER	10232	120 VAC
VSD	DI		ID FAN VARIABLE SPEED DRIVE 1A1 TURNING GEAR SPEED	ID FAN 1A REMOTE I/O POWER	10225	120 VAC
VSD	DI		ID FAN VARIABLE SPEED DRIVE 1A2 FDR BRKR CLOSED		10130	
VSD	DI		ID FAN VARIABLE SPEED DRIVE 1A1 CONTACTOR	ID FAN 1A REMOTE I/O POWER	10244	120 VAC
VSD	DI		ID FAN VARIABLE SPEED DRIVE 1A1 ZERO SPEED	ID FAN 1A REMOTE I/O POWER	10227	120 VAC
VSD	DI		ID FAN VARIABLE SPEED DRIVE 1A2 MIN SPEED 150 RPM	ID FAN 1A REMOTE I/O POWER	10226	120 VAC
VSD	DI		ID FAN VARIABLE SPEED DRIVE 1A1 FAN CONTROL RUN			
VSD	DI		ID FAN VARIABLE SPEED DRIVE 1A2 ZERO SPEED	ID FAN 1A REMOTE I/O POWER	10227	120 VAC
VSD	DI		ID FAN VARIABLE SPEED DRIVE 1A2 TROUBLE	ID FAN 1A REMOTE I/O POWER	10228	120 VAC

IP7014416

DEVICE	TYPE	SWITCH	DESCRIPTION	POWER SOURCE	POINT NAME	SIGNAL
VSD	DI		ID FAN VARIABLE SPEED DRIVE 1A2 FDR BRKR OPEN		10134	
VSD	DI		ID FAN VARIABLE SPEED DRIVE 1A2 TRNGR SPD COMMAND		10131	
VSD	DI		ID FAN VARIABLE SPEED DRIVE 1A2 NORM SP COMMAND		10132	
VSD	DI		ID FAN VARIABLE SPEED DRIVE 1A2 TURNING GEAR SPEED	ID FAN 1A REMOTE I/O POWER	10225	120 VAC
VSD	DI		ID FAN VARIABLE SPEED DRIVE 1A2 READY	ID FAN 1A REMOTE I/O POWER	10231	120 VAC
VSD	DI		ID FAN VARIABLE SPEED 1A1 DRIVE READY	ID FAN 1A REMOTE I/O POWER	10243	120 VAC
VSD	DI		ID FAN VARIABLE SPEED DRIVE 1A1 REFERENCE FAILURE			
VSD	DI		ID FAN VARIABLE SPEED DRIVE 1A1 TROUBLE	ID FAN 1A REMOTE I/O POWER	10229	120 VAC
VSD	DI		ID FAN VARIABLE SPEED DRIVE 1A1 FAN CONTROL OFF			
VSD	DI		ID FAN VARIABLE SPEED DRIVE 1A1 MIN SPEED 150 RPM	ID FAN 1A REMOTE I/O POWER	10226	120 VAC
VSD	DO		ID FAN VARIABLE SPEED DRIVE 1A1 NORM SP COMMAND		00344	
VSD	DO		ID FAN VARIABLE SPEED DRIVE 1A1 FDR BREAKER OPEN		00345	
VSD	DO		ID FAN VARIABLE SPEED DRIVE 1A1 FDR BREAKER CLOSED		00341	
VSD	DO		ID FAN VARIABLE SPEED DRIVE 1A1 TRNGR SP COMMAND		00343	
VSD	DO		ID FAN VARIABLE SPEED DRIVE 1A1 BREAKER CLOSED		00346	
VSD	DO		ID FAN VARIABLE SPEED DRIVE 1A1 RUN COMMAND		00347	
VSD	DO		ID FAN VARIABLE SPEED DRIVE 1A1 OFF COMMAND		00342	
VSD	DI		ID FAN VARIABLE SPEED DRIVE 1A1 REGENERATIVE BRAKING			
VSD	AI		ID FAN VARIABLE SPEED DRIVE 1A1 SPEED CONTROL SIGNAL			
VSD	DO		MISCELLANEOUS ALARMS 1A1			
VSD	DI		ID FAN VARIABLE SPEED DRIVE 1A2 REGENERATIVE BRAKING			
VSD	AI		ID FAN VARIABLE SPEED DRIVE 1A2 SPEED CONTROL SIGNAL			
VSD	DO		MISCELLANEOUS ALARMS 1A2			

IP7014417

SPECIFICATIONS
AND
DOCUMENTS

INTERMOUNTAIN POWER PROJECT

INTERMOUNTAIN GENERATING STATION
DELTA, UTAH

VARIABLE FREQUENCY
I. D. FAN DRIVES

SPECIFICATION 133101.63.2203.1

July 7, 2003

IP7014418

CONTRACT AGREEMENT

THIS CONTRACT AGREEMENT, entered into this ___ day of _ 20____, between the **INTERMOUNTAIN POWER SERVICE CORPORATION** (IPSC), a nonprofit organization under contract to the Intermountain Power Agency (IPA), a political subdivision of the state of Utah, organized and existing under the Interlocal Co-Operation Act, Title 11, Chapter 13, Utah Code Annotated 1953, as amended, and _____, a _____, with its principal office in _____ _____, hereinafter called the (Contractor),

WHEREAS, IPSC has prepared specifications and other Contract Documents for Variable Frequency I. D. Fan Drives as detailed in the Contract Documents (the Work), and has requested proposals from bidders to perform the Work;

WHEREAS, Contractor has submitted to IPSC a Proposal in accordance with the terms of this Contract Agreement; and

WHEREAS, IPSC has determined and declared Contractor to be the lowest and best, regular responsible bidder for the said Work, subject to execution of this Contract Agreement;

AGREEMENTS: In consideration of the compensation to be paid to Contractor, and of the mutual terms and conditions contained herein, IPSC for itself and its successors, and Contractor for itself and its permitted successors and assigns, hereby agree as follows:

ARTICLE I: Contractor shall perform in accordance with the provisions of this Contract Agreement, including the Contract Documents identified in Article III hereof.

ARTICLE II: Contractor will be paid for its performance under this Contract Agreement in accordance with the provisions of the Contract Documents, including those provisions in the Article entitled "Limitation of Liability; Responsible Party" in Part E, Division E1, General Conditions.

IP7014419

ARTICLE III: The term Contract Documents means and includes all of the following:

PART	DIV	TITLE
A	A1	Notice Inviting Proposals
B	B1	Instructions to Bidder
	B2	Supplementary Instructions to Bidders
C		Bidding Documents
	C1	Proposal
	C1	Labor, Material, and Performance Bond
	C2	Proposal Schedule
	C3	Additional Bid Information
D	D1	Contract Documents Description
E	E1	General Conditions
	E2	Additional General Conditions
F		Detailed Specifications
	F1	Special Conditions
	F2	Detailed Requirements

The foregoing Contract Documents, and the documents identified in Part D "Contract Documents Description," are an integral part of this Contract Agreement and are hereby incorporated as part of this Contract Agreement as if fully restated herein. The above listed Contract Documents shall prevail over other information submitted with Contractor's Proposal.

ARTICLE IV: This Contract Agreement, including the Contract Documents, constitutes the entire Agreement of the parties hereto with respect to the Work and other subjects addressed herein, and supersedes all prior oral communications or written documents.

IP7014420

WHEREFORE, IPSC and Contractor execute this Contract Agreement as of the date stated in the first introductory paragraph.

INTERMOUNTAIN POWER SERVICE CORPORATION
850 West Brush Wellman Road
Delta, UT 84624-9546

By: _____ _____
George W. Cross Date
President and Chief Operations Officer

Vendor
Vendor entity type and State of Organization
Vendor Full Address

By: _____ _____
Date

Title: _____

IP7014421

Spec.

IPSC 133101 MEDIUM VOLTAGE VARIABLE FREQUENCY DRIVES 63.2203.1
121102

IP7014422

TABLE OF CONTENTS

SPECIFICATIONS

PART	DIV	TITLE	PAGE NUMBER
A	A1	Notice Inviting Proposals	A1-1
B	B1	Instructions to Bidders	B1-1 thru B1-3
	B2	Supplementary Instructions to Bidders	B2-1
C		Bidding Documents	
	C1	Bidder's Bond	C1-1
	C1	Proposal	C1-2
	C1	Labor, Material, and Performance Bond	C1-3 thru C1-4
	C2	Proposal Schedule	C2-1 thru C2-2
	C3	Additional Bid Information	C3-1
D	D1	Contract Documents Description	D1-1
E	E1	General Conditions	E1-1 thru E1-8
	E2	Additional General Conditions	E2-1 thru E2-2
F		Detailed Specifications	
	F1	Special Conditions	F1-1 thru F1-6
	F2	Detailed Requirements	F2-1

IP7014423

PART A - DIVISION A1

NOTICE INVITING PROPOSALS

The Intermountain Power Service Corporation (IPSC) invites sealed bids for furnishing and delivering **Variable Frequency I. D. Fan Drives** in accordance with **Specifications 133101.63.2203.1**, available in the Purchasing Section, Intermountain Power Service Corporation, 850 West Brush Wellman Road, Delta, UT 84624-9546.

Proposals shall be submitted on IPSC's bidding forms. All Proposals shall be filed with the Buyer at the above address on or before **LATER**.

Each Proposal shall be accompanied by a certified or cashier's check payable to Intermountain Power Agency (IPA), or a Surety Bond payable to IPA, IPSC, and the City of Los Angeles Department of Water and Power (LADWP) in the amount of 5 percent of the aggregate sum of the Proposal as a guarantee that the bidder shall execute the proposed Contract Agreement if awarded.

Proposals shall be subject to acceptance within, and irrevocable for, a period of 60 calendar days after date of bid opening.

IPSC reserves the right to reject any and all Proposals.

The successful bidder shall furnish a Performance Bond equal to 100 percent of the estimated Contract amount, and shall keep the Performance Bond in place at all times thereafter until all obligations under the Contract have been discharged.

In the performance of any contract awarded, the bidder shall not discriminate in employment practices against any employee or applicant for employment because of race, religion, national origin, ancestry, sex, age, or physical disability.

Dated: _____ _____

Buyer
Intermountain Power Service Corporation

IP7014424

PART B - DIVISION B1

INSTRUCTIONS TO BIDDERS

1. Form, Signature, and Delivery of the Proposals: The bidder's Proposal shall be made on the yellow copy of the Bidding Documents. The Specifications printed on white paper shall be retained by the bidder.

   The bidder's name, address, and the date shall be stated in the Proposal. The Proposal shall be signed by the person authorized to bind the bidder.

   The Proposal shall be enclosed in a sealed envelope, plainly marked in the upper left-hand corner with the name and address of the bidder. The envelope shall bear the words "Proposal for," followed by the Specification Number, the title of the Specifications, and the date and hour of bid opening.

   If the Proposal is mailed, it shall be addressed as follows:

   Purchasing Section
   Intermountain Power Service Corporation
   850 West Brush Wellman Road
   Delta, UT 84624-9546

   If the Proposal is sent by messenger, it shall be delivered to the Administration Building, Intermountain Power Service Corporation, 850 West Brush Wellman Road, Delta, Utah.

2. Interpretations and Addenda: Should a bidder find discrepancies or omissions in the plans, specifications, or other documents, or should there be doubt as to their true meaning, the bidder shall submit to the Buyer a written request for an interpretation or clarification thereof. A request for addenda, interpretation, or clarification shall be delivered to the Buyer marked "Request for Interpretation" and must be received by the Buyer in time to permit a reasonable response before the date of opening bids. Any interpretation of, or change in the documents will be made only by addendum issued to each person to whom Specifications have been issued and will become a part of any contract awarded. IPSC will not be responsible for or bound by any other explanations or interpretations.

3. Correspondence: All inquiries or correspondence to IPSC prior to award of Contract shall be addressed to the Buyer.

4. Changes or Alternatives: The bidder shall not change any wording in the documents. Any explanations or alternatives offered shall be submitted in a letter attached to the front of the Bidding Documents. Alternatives which do not substantially comply with IPSC's Specifications cannot be considered. Language of negation or limitation of any rights, remedies, or warranties provided by law will not be considered part of the Proposal. Bids offered subject to conditions or limitations may be rejected.

IP7014425

5. Specified Materials or Equivalent: Whenever any particular material or process is specified by a patent or proprietary name, by a trade or brand name, of a manufacturer, such wording is used for the purpose of describing the material or process, fixing the standard of quality required, and shall be deemed to be followed by the words "or equivalent." The bidder may offer any material or process which shall be the equivalent of that so specified, but the bidder must identify the equivalent offered.

6. Language: Everything submitted by the bidder shall be written in the English language.

7. Sales or Use Taxes: Prices quoted by the bidder shall not include any applicable sales or use taxes or Federal Excise Taxes.

8. Duties: Prices quoted by the bidder shall include all applicable duties.

9. Award of Contract: Any award of Contract will be made to the lowest and best, regular responsible bidder. The determination as to which is the lowest and best, regular responsible bidder may be made on the basis of the lowest ultimate cost of the services, materials, equipment, or other Work in place and use. The right is reserved to reject any or all Proposals.

   Within thirty (30) calendar days after the date of award of Contract, the successful bidder shall sign the Contract supplied by IPSC. The Contract will be effective upon execution by IPSC. Award of Contract is subject to execution of IPSC's form of Contract Agreement and other Contract Documents.

10. Comparison of Bids: For the purpose of comparing bids, it will be assumed that the specified quantity of Variable Frequency I. D. Fan Drives will be required during the Contract period.

11. Bidder's Bond: The Proposal shall be accompanied by a certified check or a cashier's check issued by a responsible bank, payable in the state of Utah to the order of Intermountain Power Agency, in an amount not less than 5 percent of the aggregate sum of the Proposal. A surety bond payable to IPA, IPSC, and LADWP in a like amount will be accepted in lieu of a check.

12. Performance Bond: Within thirty (30) calendar days after date of award of Contract, the successful bidder shall furnish a Performance Bond, payable to IPA, IPSC, and LADWP equal to 100 percent of the estimated amount of the Contract.

13. Calculation of the Bonds: The estimated amount of the Proposal for the Bidder's Bond, or of the Contract for the Performance Bond, will be considered to be the price, including freight charges, quoted by the bidder in the Proposal Schedule, times the assumed quantity under the Comparison of Bids in Article 10 of this Division.

PART B - DIVISION B2

SUPPLEMENTARY INSTRUCTIONS TO BIDDERS

1. LOCAL CONDITIONS. Each bidder shall visit the site of the work and thoroughly inform himself of all conditions and factors which would affect the prosecution and completion of the work, including, but not limited to, the arrangement and condition of existing or proposed equipment affecting or which is affected by the proposed work. A pre-bid site visit is scheduled for July 30, 2003 at 10:00 am. All bid are required to send a representative to the pre-bid meeting.

It must be understood and agreed that all such factors have been properly investigated and considered in the preparation of every proposal submitted. No claims for financial adjustment to any contract awarded for the work will be permitted which are based on the lack of such prior information or its effect on the cost of the work.

Bidders my schedule additional visits to the site by telephoning Mr. Jon Christensen at (435) 864-6481.

IP7014427

PART C - DIVISION C1

BIDDING DOCUMENTS

BIDDER'S BOND

(Not necessary when certified or cashier's check accompanies bid. See below*.)

SURETY BOND

We, the undersigned Principal and Surety, acknowledge ourselves jointly and severally bound to Intermountain Power Agency (IPA) and Intermountain Power Service Corporation (IPSC) of the state of Utah, and the City of Los Angeles Department of Water and Power (LADWP), in the sum of _____ Dollars ($_____), to be paid to IPA if the attached Proposal shall be accepted and the proposed Contract awarded to said bidder, and said bidder shall fail to execute the Contract and bond for the faithful performance thereof; otherwise this obligation to be void.

Dated: _____, 20____

Firm Name: _____

By: _____
(Signature)**

(Surety): _____

By: _____
(Signature)

*When bidder is submitting a check in lieu of a bond, the check must be made payable to Intermountain Power Agency, must either be certified by a responsible bank or be a cashier's check issued by a responsible bank, and must be payable in the state of Utah.

If check is submitted herewith, state check number _____ and amount $__

**See Form, Signature, and Delivery of the Proposals, Division B1

NOTE: All signatures above must be written in ink.

IP7014428

PROPOSAL

The undersigned hereby proposes to furnish and deliver **Variable Frequency I. D. Fan Drives** to the Intermountain Power Service Corporation in accordance with **Specifications 133101.63.2203.1**.

The undersigned agrees, upon the acceptance of this Proposal, (a) to execute IPSC's form of Contract (including the Contract Agreement and other Contract Documents identified in said Specifications) for furnishing and delivering the items and services embraced in the accepted Proposal, (b) to perform its obligations under the Contract at the prices stated in the accompanying Proposal Schedule, and (c) to furnish a Performance Bond conditioned upon the faithful performance of the Contract.

The undersigned furthermore agrees that, in case of failure to execute such Contract Agreement and provide the necessary Performance Bond, the check or Bidder's Bond accompanying this Proposal, and the monies payable thereon, shall be forfeited to and remain the property of Intermountain Power Agency.

The undersigned declares under penalty of perjury that this Proposal is genuine, is not a sham or collusive, and is not made in the interest or in behalf of any person or entity not herein named. The undersigned further declares under penalty of perjury that the bidder has not directly or indirectly induced or solicited any other bidder to submit a sham bid, or any other person, firm, or corporation to refrain from bidding. The undersigned also declares under penalty of perjury that the bidder has not in any manner sought by collusion to secure for itself an advantage over any other bidder.

The undersigned hereby declares that the following list states any and all variations from the exceptions to the requirements of the contract documents and that, otherwise, it is the intent of this Proposal that the work will be performed in strict accordance with the contract documents:

_____

_____

_____

_____

_____

(Attach additional pages as required.)

I declare under penalty of perjury under the laws of the state of Utah that the foregoing is true and correct.

Date: _____, 20_____

Bidder: _____

Address: _____

IP7014429

Signed By: _____
(Authorized Signature)

Print Name: _____

Title: _____

IP7014430

Spec. 133101.63.2203.1

Contract No.

Bond No.

LABOR, MATERIAL, AND PERFORMANCE BOND

1. Know all persons by these presents, that

_____

(Insert Contractor's name and address or legal title.)

_____

as Principal, hereinafter called Contractor, and

_____

as Surety, hereinafter called Surety, are held and firmly bound unto Intermountain Power Agency, Intermountain Power Service Corporation, hereinafter called IPSC, and the City of Los Angeles Department of Water and Power, as Obligees, in the amount of
Dollars ($_____) for the payment whereof Contractor and Surety bind themselves, their heirs, executors, administrators, successors and assigns, jointly and severally, firmly by these presents.

2. WHEREAS, Contractor has by written agreement dated _____, 20____, entered into a Contract Agreement with IPSC for **Variable Frequency ID Fan Drives** in accordance with **Contract No. 133101.63.2203.1** which Contract is attached hereto and by reference made a part hereof, and is hereinafter referred to as the Contract.

NOW, THEREFORE,

3. THE CONDITION OF THIS OBLIGATION is such that, if Contractor shall promptly and faithfully perform said Contract, and shall promptly make payment to all claimants for labor and material used or supplied for use in the performance of the Contract, then this obligation shall be null and void; otherwise, it shall remain in full force and effect.

4. Whenever Contractor shall be, and declared by IPSC to be, in default under the Contract, IPSC having performed IPSC's obligations there under, the Surety may promptly remedy the default, or shall promptly:

   a. Complete the Contract in accordance with its terms and conditions, or

   b. Obtain a bid or bids for submission to IPSC for completing the Contract in accordance with its terms and conditions, and upon determination by IPSC and Surety of the lowest and best, regular responsible bidder acceptable to IPSC, arrange for a Contract between such bidder and IPSC, and make available as work progresses (even though there should be a default or a succession of defaults under the Contract or Contracts of Completion arranged under this paragraph) sufficient funds to pay the cost of completion less the Balance of the Contract price, but not exceeding the amount of the Bond. The term

"Balance of the Contract price," as used in this paragraph, shall mean the total amount payable to Contractor under the Contract and any amendments thereto, less the amount previously paid to Contractor.

5. Upon failure of Contractor to timely pay laborers and material men, Surety agrees to discharge such obligation in an amount not exceeding the sum set forth above and also, in case suit is brought upon this Bond, a reasonable attorney's fee to be fixed by the court. This bond shall inure to the benefit of any and all persons named in Title 14, Chapter 2, Utah Code, as amended, so as to give a right of action to such persons or their assigns in any suit brought upon this bond.

6. No right of action shall accrue on this bond to or for the use of any person or corporation other than named herein, or the heirs, executors, administrators, or successors and assigns of the Obligees, except as provided by statutory or regulatory provisions relating to Contractor's bonds upon public and private contracts, the provisions of which are made a part hereof as a supplemental description of Surety's obligations herein.

7. Surety hereby waives notice of any change orders or extensions of time made by IPSC in accordance with the terms of the Contract.

8. SIGNED AND SEALED this _____ day of _____ A.D. 20_____

In the presence of: _____
(Principal)

(Seal)

(Witness) (Title)

(Seal) (Surety)

(Witness) (Title)

PART C- DIVISION C2

BIDDING DOCUMENTS - PROPOSAL SCHEDULE

Proposal is hereby made to furnish and deliver to IPSC **Variable Frequency I. D. Fan Drives.**

Lump sum price for complete drive systems for one I. D. Fan delivered in January 2004.

_____

_____ ($)
Price in words

Lump sum price for complete drive systems for two I. D. Fans delivered in January 2005.

_____

_____ ($)
Price in words

Lump sum price for complete drive systems for three I. D. Fans delivered in January 2006.

_____

_____ ($)
Price in words

Lump sum price for complete drive systems for two I. D. Fans delivered in January 2007.

_____

_____ ($)
Price in words

Latest date for IPSC to exercise option to purchase two complete drive systems in January 2005.

_____

Latest date for IPSC to exercise option to purchase two complete drive systems in January 2006.

_____

Latest date for IPSC to exercise option to purchase two complete drive systems in January 2007.

IP7014433

_____

Bids shall include an anticipated payment schedule.

Contractor's Technical Services. The following adjusting prices will be used to adjust the contract amount for manufacturer's service representatives' time:

	Daily Rate	Daily Overtime Rate
Per diem at the site of the work	$ _____	$ _____
Per round trip to and from the site of the work	$ _____	

Prices: The price or prices shall be firm.

Cash Terms: A discount for prompt payment is offered of _____ percent for Contract payments made within _____ calendar days after date of acceptance or delivery and receipt of invoice.

Taxes: The foregoing quoted prices are exclusive of all applicable sales and use taxes.

Manufacturer: _____

Location of Point of Manufacture: _____

Brand and Catalog Number or Other Designation: _____

Form of Business Organization: The bidder shall state below the form of its business organization.

Bidder is a: _____, organized under the laws of the state of _____.
(Corporation, Partnership, Limited Partnership, Individual)

If a partnership, the bidder shall state below the names of the partners. If a corporation, the bidder shall state below the names of the president and of the secretary.

IP7014434

Person to Contact: Should IPSC desire information concerning this Proposal, please contact:

Name: _____ Telephone No: _____

Address: _____

(If different, the address of bidder's chief executive office is:) _____

_____

IP7014435

PART C - DIVISION C3

BIDDING DOCUMENTS - ADDITIONAL BID INFORMATION

1. Detailed Information: The bidder shall furnish the following detailed information for the **Variable Frequency I. D. Fan Drive Systems** to be furnished.

   - See required proposal data in detail specifications in Division F2.
   - The bidder shall provide a price breakdown of the major equipment components included in the lump sum price.
   - The bidder shall provide price adders and deducts for equipment or options to equipment that are unique to the bidder's equipment or system.
   - The bidder shall provide a listing of the available equipment options that are included in the lump sum price. A listing of other options that are available with a corresponding unit price shall be provided for IPSC to consider. Any available additional options selected by IPSC will be added to the lump sum price at the time of contract award.

IP7014436

PART D - DIVISION D1

CONTRACT DOCUMENTS DESCRIPTION

The Contract Agreement, together with the documents listed in Article III thereof, the Reference Specifications, any other documents listed below, and such of Contractor's Proposal documents as are expressly agreed to by IPSC shall constitute the Contract (the Contract). Said Documents are complementary and require complete and finished Work. Anything shown or required of Contractor in any one or more of said documents shall be as binding as if contained in all of said documents. Contractor shall not be allowed to take advantage of any error, discrepancy, omission, or ambiguity in any document, but shall immediately report to the Chief Operations Officer, in writing, any such matter discovered. The Chief Operations Officer will then decide or correct the same and the decision will be final.

IP7014437

PART E - DIVISION E1

GENERAL CONDITIONS

1. Definitions: The following words shall have the following meanings:

   a. Bidder: The person, firm, or corporation adopting and submitting a Proposal under these Specifications.

   b. Buyer: The Purchasing Agent for IPSC.

   c. Chief Operations Officer: The President and Chief Operations Officer of IPSC, or other representatives designated by the President and Chief Operations Officer acting within the limits of their authority.

   d. Contract Administrator: The IPSC employee designated by the Chief Operations Officer with primary responsibility for administration of the Contract, or other representatives designated by the Contract Administrator acting within the limits of their authority.

   e. Contractor: The person, firm, or corporation to whom the Contract is awarded.

   f. Directed, Required, Approved, etc.: The words *directed, required, approved, permitted, ordered, designated, prescribed, instructed, acceptable, accepted, satisfactory,* or similar words shall refer to actions, expressions, and prerogatives of the Contract Administrator unless otherwise expressly stated.

   g. Engineer: The Intermountain Power Service Corporation, a duly authorized agent of the Owner.

   h. Gallon: Liquid volume of 231 cubic inches at 60 degrees Fahrenheit.

   i. IGS: Intermountain Generating Station located at 850 West Brush Wellman Road, Delta, Utah 84624.

   j. IPA: Intermountain Power Agency, the owner of Intermountain Power Project, and a political subdivision of the state of Utah, organized and existing under the Interlocal Co-operation Act, Title 11, Chapter 13, Utah Code Annotated 1953, as amended.

   k. IPP: Intermountain Power Project, consisting of Intermountain Generating Station, Intermountain Railcar, Intermountain Converter Station, Adelanto Converter Station, Intermountain AC Switchyard and associated transmission lines, microwave stations, and support facilities.

   l. IPSC: Intermountain Power Service Corporation, a nonprofit corporation, furnishing personnel to support the Operating Agent in the performance of operation and maintenance.

IP7014438

m. Operating Agent, or LADWP: The City of Los Angeles Department of Water and Power which is responsible for operation and maintenance for IPP.

n. Reference Specifications: Those bulletins, standards, rules, methods of analysis or tests, codes, and specifications of other agencies, engineering societies, or industrial associations referred to in these Specifications. These refer to the latest edition, including amendments published and in effect at the date of the Invitation for Proposal, unless specifically referred to by edition, volume, or date. Unless the context otherwise requires, Reference Specifications also include all amendments published or adopted after the date of the Invitation for Proposal.

o. Subcontractor: A person, firm, or corporation, other than Contractor and employees thereof, who supplies labor, services or materials for a portion of the Work to be performed by Contractor under the Contract.

p. Ton: The short ton of 2000 pounds.

q. Work: The services, materials, equipment, and other performance identified in these Specifications and other Contract Documents to be provided by Contractor.

2. Materials and Work: All Work shall comply with these Specifications. All materials used or supplied, and all equipment furnished, shall be new and unused, but this requirement shall not preclude the use of recycled materials in the manufacturing processes. All Work shall be done by qualified workers in a thorough and workmanlike manner that would pass without objection in both Contractor's trade and IPA's and IPSC's industry. Materials, equipment, workmanship, and other Work not definitely specified, but incidental to and necessary for the Work, shall conform to the best commercial practice for the type of Work in question and be of a quality that passes without objection in Contractor's trade and IPA's and IPSC's industry.

3. Nondiscrimination: The applicable provisions of Executive Order No. 11246 of September 24, 1965, and Bureau of Land Management regulations, and all other applicable governmental regulations pertaining to nondiscrimination in employment in the performance of contracts, are incorporated herein by reference, and made a part hereof as if they were fully set forth herein. During the performance of the Contract, Contractor shall not discriminate in its employment practices against any employee or applicant for employment because of the employee's or applicant's race, religion, national origin, ancestry, sex, age, or physical disability. All subcontracts awarded under or pursuant to the Contract shall contain a like nondiscrimination provision.

4. Governing Law; Venue: The Contract shall be governed by the substantive laws of the state of Utah, regardless of any rules on conflicts of laws or choice of law that would otherwise cause a court to apply the laws of any other state or jurisdiction. Any action, in law or in equity, concerning any alleged breach of or interpretation of the Contract, or concerning any tort in

relation to the Contract or incidental to performance under the Contract, shall be filed only in the state or federal courts located in the state of Utah.

5. Patents and Intellectual Property: Contractor shall fully indemnify and, at the election of IPA, defend IPA, IPSC, and the Operating Agent against any and all liability, whatsoever, by reason of any alleged infringement of any intellectual property rights (including, but not limited to, patents, copyrights, trademarks, or trade secrets) on any article, process, method, or application used in any designs, plans, drawings, or specifications provided under the Contract, or by reason of Contractor's manner of performance under the Contract, or by reason of use by IPA, IPSC, or the Operating Agent of any article, process, or material specified by Contractor.

6. Contractor's Address and Legal Service: The address given in the Proposal shall be considered the legal address of Contractor and shall be changed only by advance written notice to IPSC. Contractor shall supply an address to which certified mail can be delivered. The delivery of any communication to Contractor personally, or delivery to such address, or the depositing in the United States Mail, registered or certified with postage prepaid addressed to Contractor at such address, shall constitute a legal service thereof.

7. Assignment of Contract Prohibited: Contractor shall not assign or otherwise attempt to dispose of the Contract, or any rights hereunder, or of any monies due or to become due hereunder, unless authorized by the prior written consent of the Chief Operations Officer. The Contract, and Contractor's rights hereunder (including rights of collection) are non-assignable without the Chief Operations Officer's prior written consent. No right or claim can be asserted against IPA, IPSC, or the Operating Agent, in law or equity, by any person, by reason of any assignment or disposition unless so authorized.

   If Contractor, without such prior written consent, purports to assign or dispose of the Contract, or any right or interest hereunder, IPSC may at its option terminate the Contract. Such termination shall relieve and discharge IPA, IPSC, and the Operating Agent from any and all liability, duties, and obligations to Contractor, and to any assignee or transferee thereof.

8. Quality Assurance: IPSC has the right to subject any or all materials, services, equipment, or other Work furnished and delivered under the Contract to rigorous inspection and testing. (Unless otherwise specifically provided in the Contract with respect to specific materials, services, equipment, or other Work, IPSC has no duty to inspect, test, or specifically accept.) Before offering any material, services, equipment, or other Work for inspection, testing, delivery, or acceptance, Contractor shall eliminate all items or portions which are defective or do not meet the requirements of these Specifications. If any items or portions are found not to meet the requirements of these Specifications, the lot, or any faulty portion thereof, may be rejected. Only the Contract Administrator may accept any material, service, equipment, or other Work as complying with these Specifications on behalf of IPSC.

   IPSC may inspect and reject materials, services, equipment, or other Work tendered or purchased under the Contract at any reasonable location IPSC may choose (including, but not limited to,

points of origin, while in transit to IPSC, IPSC's specified receiving points, IPSC's storage sites, or any point of use or installation). Inspection can include any testing that IPSC deems necessary or convenient to determine compliance with these Specifications. The expense of any initial tests will be borne by IPSC. All expenses of subsequent or additional tests will be charged against Contractor when due to failure of first-offered materials, services, equipment, or other Work to comply with these Specifications.

The fact that the materials, services, equipment, or other Work have or have not been inspected, tested, or accepted by IPSC, whether voluntarily or as required by any specific provision in the Contract, shall not relieve Contractor of responsibility in case of later discovery of nonconformity, flaws, or defects, whether patent or latent.

9. Extra Work, Reduced Work, and Change Orders by IPSC: IPSC reserves the right at any time before final acceptance of the entire Work to order Contractor to furnish or perform extra Work, or to make changes altering, adding to, or deducting from the Work, without invalidating the Contract. Changes shall not be binding upon either IPSC or Contractor unless made in writing in accordance with this Article.

Changes will originate with the Chief Operations Officer who will transmit to Contractor a written request for a Proposal covering the requested change, setting forth the changed Work in detail, and including any required supplemental plans or specifications. Upon receipt of such request, Contractor shall promptly submit in writing to the Chief Operations Officer a Proposal offering to perform such change, a request for any required extension of time caused by such change, and an itemized statement of the cost or credit for the proposed change. Failure of Contractor to include a request for extension of time in the Proposal shall constitute conclusive evidence that such extra Work or revisions will entail no delay and that no extension of time will be required.

If Contractor's Proposal is accepted by IPSC, a written change order will be issued by the Chief Operations Officer stating that the extra Work or change is authorized and granting any required adjustments of the Contract price and of time of completion. If Contractor's Proposal is rejected by IPSC, then IPSC may order the additional or changed Work from other vendors.

Additional Work or changes pursuant to the change order shall be performed in accordance with the terms and conditions of these Specifications. No extra Work shall be performed or change made unless pursuant to such written change order, and no claim for an addition to the Contract price shall be valid unless so ordered.

Notwithstanding anything in the preceding paragraphs to this Article, IPSC may issue a written order reducing the Scope of Work without issuing a request for Proposal. Any such reduction in the Scope of Work shall be effective upon issuance. Reductions ordered by IPSC shall constitute partial terminations and shall reduce the price to be paid.

10. Changes at Request of Contractor: Changes may be made to facilitate the Work of Contractor. Such changes may only be made without additional cost to IPSC, without extension of time, and

pursuant to written permission from the Chief Operations Officer. Permission for such changes shall be requested in writing by Contractor to the Chief Operations Officer.

11. Time is of the Essence and Extensions of Time: Time is of the essence to the Contract. Delivery and other performance of Work must be completed within the times and by the dates specified. Time for delivery or other performance of Work shall not be extended except as provided in this Article. Failure to deliver or otherwise perform Work within the times and by the dates specified shall constitute a default and be grounds for IPSC to immediately terminate the Contract.

If Contractor makes a timely written request in accordance with this Article, the time for delivery or other performance of Work will be extended by a period of time equivalent to any delay in the whole Work which is: (a) authorized in writing by the Chief Operations Officer, (b) caused solely by IPSC, or (c) due to unforeseeable causes (such as war, strikes, or natural disasters) and which delay is beyond the control and without the fault or negligence of Contractor and subcontractors.

Contractor shall promptly notify the Chief Operations Officer in writing at both the beginning and ending of any delay, of its cause, its effect on the whole Work, and the extension of time claimed. Failure of Contractor to provide such written notices and to show such facts shall constitute conclusive evidence that no excusable delay has occurred and that no extension of time is required.

The Chief Operations Officer will ascertain the facts and the extent of the delay and will extend the time for delivery when the findings of fact justify such an extension. The Chief Operations Officer's determination will be final and conclusive.

IPSC will be responsible for granting extensions of time as herein provided, but will not otherwise be responsible in any manner or liable to any extent for damage directly or indirectly suffered by Contractor as a result of any delay.

12. Protests and Claims: If Contractor considers any demand of the Chief Operations Officer to be outside of the requirements of the Contract, or considers any amount of payment, or any record, ruling, or other act, omission, or determination by the Chief Operations Officer to be unreasonable, Contractor shall promptly deliver to the Chief Operations Officer a written statement of the protest and of the amount of compensation or nature of accommodation, if any, claimed.

Upon written request by the Chief Operations Officer, Contractor shall provide access to all records containing any evidence relating to the protest or claim.

Upon review of the protest, claim, and evidence, the Chief Operations Officer will promptly advise Contractor in writing of the final decision which will be binding on all parties.

The requirements of this Article shall be in addition to, and shall not be construed as waiving claims provisions of the Statutes of the state of Utah. Contractor is deemed to have waived and does waive all claims for extensions of time and for compensation in addition to the Contract price except for protests and claims made and determined in accordance with this Article.

13. Limitation of Liability; Responsible Party: It is understood and agreed that IPA shall be the sole party or person liable to Contractor for payments under or pursuant to the Contract, and for any breaches, defaults, or for any torts in the performance of or in relation to the Contract by IPA, IPSC, or the Operating Agent, or any officers, agents, or employees thereof. Contractor hereby expressly covenants and agrees that no suit shall be brought by Contractor against IPSC, or the Operating Agent, or their, or IPA's officers, agents, or employees, or any of the purchasers of power from IPA, but that all rights or remedies that Contractor may have or that may arise under or in relation to the Contact shall be asserted by Contractor solely against IPA. Without limiting the foregoing provisions of this Article, Contractor shall have no right against any of the foregoing (including IPA) to assert or recover in contract or in tort, damages, or losses in the nature of consequential damages, incidental damages, punitive, or exemplary damages.

14. Independent Contractor: Contractor shall perform all Work as an independent contractor in the pursuit of its independent calling. Contractor is not an employee, agent, joint venture, partner, or other representative of IPA, IPSC, or the Operating Agent and shall be under the control of IPSC only to provide the services requested and not as to the means or manner by which the Work is to be accomplished. Contractor has no authority to act for, bind, or legally commit IPA, IPSC, or the Operating Agent in any way.

15. Drug Policy: Contractor shall submit a current copy of its drug policy for review. IPP facilities are a drug free and zero tolerance workplace. Contractor's employees and its subcontractors' employees who are to perform Work or otherwise be at the IPP facilities shall participate in a drug testing program prior to arrival, and at any additional time(s) during the Contract as IPSC may request.

16. Security and Safety Compliance: Contractor and its employees, agents, representatives, and/or subcontractors, while performing Work on IPP premises, or who are otherwise on IPP premises, shall fully comply with all security, fire prevention, and safety rules and procedures in force at IPP. IPSC has the right (but not duty) to make periodic and random inspections of the persons, and of their respective property, upon entering, at any time while on, and when departing any IPP facility. Such persons subject to inspection include Contractor, any subcontractor, and their respective employees, agents, and representatives. Property subject to inspection includes, but is not limited to, vehicles, clothing, toolboxes, lunch boxes, any other carrying case, tools or equipment, and anything contained therein. If violations are noted, the violations will be reported to Contractor's on-site supervisor and the Contract Administrator for appropriate action.

All Contractor's employees will be given security identification badges by IPSC and those badges shall be displayed each day to allow admittance on IPP premises. Contractor's employees who do not have security identification badges in their possession, will not be allowed on site unless signed in by the Contract Administrator. All security badges shall be returned to the Security Contractor when the employee terminates their work at this site. All Contractor's vehicles will also receive parking stickers from the Security Contractor allowing entrance on IPP premises.

Temporary badges and parking stickers are available for intermittent Contractor employees and vehicles.

Contractor shall have access on IPP premises between the hours of 7:00 am to 7:00 pm Monday through Friday. Access may be allowed on weekends or at other times with the approval of the Contract Administrator.

Contractor will be directed to specified areas for parking vehicles and equipment by the Contract Administrator. Certain areas of IPP premises are restricted to IPSC vehicles only. Exceptions to the parking restriction will be made on an as needed basis through Contractor's respective Contract Administrator. Contractor shall make its employees, agents, representatives, and/or subcontractors aware of all areas that are subject to restricted parking.

Contractor agrees, warrants, and represents that (a) it is familiar with the risks of injury associated with the Work and otherwise being on IPP premises, (b) has reviewed the Work to be performed, (c) has inspected the IPP Work site with an IPSC representative, and (d) has determined that no unusual or peculiar risk of harm exists with regard to the Work to be performed on IPP premises. Contractor further agrees that it shall, at all times, provide on IPP premises, a competent supervisor(s) familiar with IPSC's and the industry's safety standards to ensure compliance with all federal, state, and local regulations pertaining to safety (including, but not limited to, Federal and State OSHA, as said regulations relate to the Work to be performed under the Contract). Although IPSC assumes no responsibility to oversee or supervise the Work, IPSC reserves the right to review safety programs and practices and to make recommendations to Contractor. No such review or recommendation by IPSC shall impose any liability or responsibility on IPSC, or relieve Contractor from providing a safe working environment and complying with all legal requirements.

Contractor shall comply with IPSC's safety and equipment requirements prior to starting the Work. Worker protective clothing, which includes, but is not limited to, hardhats, safety glasses, safety shoes, gloves, respirators, earplugs, safety harnesses, and face shields shall be provided by Contractor.

Prior to starting the Work, all of Contractor's personnel shall attend a safety orientation taught by a representative of IPSC. At Contractor's option and subject to IPSC approval, a supervisor of Contractor may attend the orientation taught by IPSC, and then present the orientation to the remainder of Contractor's personnel. In that case, a roll shall be provided to IPSC which lists each person who received the orientation and the date it was received.

17. Nonexclusive: This is a nonexclusive Contract. IPSC reserves the right to obtain services, materials, equipment, or other Work from other vendors or suppliers.

PART E - DIVISION E2

ADDITIONAL GENERAL CONDITIONS

1. Guarantee: Contractor guarantees and warrants for a minimum period of one (1) year after final startup testing and acceptance of each drive system, and for such longer period as may be specified by the applicable statute of limitations, that all services, materials, equipment, and other Work furnished are free from defects and otherwise conform to the terms of the Contract, including, but not limited to, the Article entitled "Materials and Work" in Part E, Division E1, General Conditions.

   Contractor shall repair or replace, as IPSC may direct, all defective services, materials, equipment, or other Work. Such repair or replacement shall be F.O.B. at such destination as IPSC may direct (contract delivery point, point of installation, point of consumption, etc.). IPSC's right to demand repair or replacement is in addition to any other remedies that may be available for breach of the foregoing guarantee and warranty.

   Contractor shall, for the protection and benefit of IPA, IPSC, and LADWP, obtain guarantees conforming to the foregoing two paragraphs from each of its vendors and subcontractors with respect to their material, equipment, services, or other portion of the Work. Such guarantees from vendors and subcontractors shall be in addition to, and not in lieu of, Contractor's own guarantees.

2. Payment: Payment will be made within thirty (30) calendar days after delivery and receipt of the invoice in the form directed by IPSC.

3. Work Slips and Invoices: Contractor shall furnish Work slips suitable for recording (e.g., - the weight of concentrated sulfuric acid in tons), at the time of each delivery. IPSC may direct the form of Work slips to be used. Accuracy of completed Work slips shall be subject to verification by IPSC, who will retain the original copies.

   At the expiration of each calendar month during which material or other Work is delivered, Contractor shall render an invoice and copies of signed Work slips (e.g., - the total weight of acid) delivered during said month.

   Invoices shall be submitted in duplicate to Accounts Payable, Intermountain Power Service Corporation, 850 West Brush Wellman Road, Delta, UT 84624-9546. All letters pertaining to invoices shall be addressed to the foregoing address.

   IPSC may direct the form of invoice to be used. All invoices shall show the Contract number, release number, or other identification of each delivery covered by the invoice. In all cases, the amount of the applicable sales tax or use tax shall be separately stated on the invoice.

4. Regulations, Permits, Licenses, and Warrants: Contractor shall comply with all applicable federal, state, and local regulations including, but not limited to, Federal and State OSHA, as said regulations relate to the Contract, Contractor's performance, or Contractor's trade. In addition,

IP7014445

Contractor shall ensure that all permits, licenses, and warrants relating to the Contract, Contractor's performance, and Contractor's trade be acquired.

5. Letters to IPSC: All inquiries relating to these Specifications prior to award of Contract shall be addressed to the Buyer.

After award of Contract, all letters pertaining to performance of the Contract (other than invoice) shall be addressed as follows:

President and Chief Operations Officer
Intermountain Power Service Corporation
850 West Brush Wellman Road
Delta, UT 84624-9546

Attention: Contract Administrator

Regarding **Contract No. 133101.63.2203.1**

IP7014446

PART F - DIVISION F1

DETAILED SPECIFICATIONS - SPECIAL CONDITIONS

1. General: Under the terms of the Contract, Contractor shall furnish and deliver **Variable Frequency I. D. Fan Drives** ordered by IPSC during the specified period beginning with date stated in the first introductory paragraph of the Contract Agreement (hereinafter called the Contractual Period).

2. Quantity: IPSC agrees to purchase **the specified variable frequency I. D. fan drive systems** during the Contractual Period.

   In consideration of the above agreed purchase quantity, and as an additional consideration thereto, IPSC, shall during the Contractual Period have the option (but not duty) of purchasing additional quantities of **the specified variable frequency I. D. fan drive systems** up to IPSC's maximum requirements for operation and storage during the Contractual Period. Said option may be exercised, in whole or in part, by the issuance to Contractor of releases for any portion thereof by the Buyer or the Buyer's duly authorized representative. Nothing contained herein shall require IPSC to order any of its requirements beyond the approximate quantities stated in Division A1 from Contractor as opposed to from other suppliers or contractors.

3. Delivery: Contractor shall make deliveries only upon receipt of releases issued by the Buyer or a duly authorized representative. IPSC reserves the right to specify in said releases the amounts and dates of deliveries at the locations described in the Proposal Schedule; provided, however, that no release will specify a single delivery of less than two variable frequency I. D. fan drive systems. IPSC requires delivery as specified after the date of issuance of such releases.

   Deliveries shall be made between the hours of 8:00 a.m and 3:00 p.m., except holidays, Monday through Friday, unless other arrangements are made in writing between Contractor and Buyer.

4. Printed Documents: All printed documents, including drawings and instruction books, if applicable, shall be in the English language. All units of measurement shall be in the English foot-pound-second system.

5. Delivery Arrangements: After award of the Contract and prior to delivery or other performance of any Work, Contractor shall become familiar with the unloading facilities at the delivery point(s) set forth in the Proposal Schedule, either by personal inspection or by contacting the Contract Administrator, (435) 864-4414.

6. Option to Renew: IPSC has the right and option at any time during the original term of the Contract to renew the Contract for a period of 2 years from the date of scheduled expiration of the original term of the Contract.
   In the event that said option is exercised by IPSC, it will be exercised by the issuance and delivery to Contractor of a written order therefore by the Buyer or his duly authorized representative. The

Contract executed for the original Contract period shall remain in full force and effect for any such extended or option period, at the same prices and under the same terms and conditions for such extended or option period.

7. Indemnity Clause: Contractor undertakes and agrees to indemnify, hold harmless, and at the option of the IPA, defend IPA, IPSC, LADWP, and any and all of their boards, officers, agents, representatives, employees, assigns, and successors in interest from and against any and all suits and causes of action, claims, charges, costs, damages, demands, expenses (including, but not limited to, reasonable attorneys' fees and cost of litigation), judgments, civil fines and penalties, liabilities or losses of any kind or nature, including, but not limited to, violations of regulatory law, breach of contract, death, bodily injury or personal injury to any person, including Contractor's employees and agents, or damage or destruction to any property of either party hereto, or of third persons, arising in any manner by reason of or incident to the performance of the Contract on the part of Contractor, or Contractor's officers, agents, employees, or subcontractors of any tier, except as may be caused by the sole negligence of IPA, IPSC, LADWP, or their boards, officers, agents, representatives, or employees.

8. Insurance Requirements: Prior to the start of the Work, but not later than thirty (30) calendar days after date of award of Contract, Contractor shall furnish IPSC evidence of coverage from insurers acceptable to IPSC and in a form acceptable to IPSC's Insurance Analyst. Such insurance shall be maintained by Contractor and at Contractor's sole cost and expense.

Such insurance shall not limit or qualify the liabilities and obligations of Contractor assumed under the Contract. IPA, IPSC, or LADWP shall not, by reason of any of their inclusion under these policies or otherwise, incur liability to the insurance carrier for payment of the premium for these policies.

Any insurance carried by IPA, IPSC, or LADWP which may be applicable is and shall be deemed excess insurance, and Contractor's insurance is and shall be primary for all purposes despite any provision in Contractor's policies to the contrary.

Should any portion of the required insurance be on a "Claims Made" policy, Contractor shall, prior to the policy expiration date following completion of the Work, provide evidence that the "Claims Made" policy has been renewed or replaced with the same limits and terms and conditions of the expiring policy at least for the Contract under which the Work was performed.

a. Workers' Compensation/Employer's Liability: Workers' Compensation Insurance covering all of Contractor's employees in accordance with the laws of all states in which the Work is to be performed and including Employer's Liability Insurance, and as appropriate, Broad Form All States Endorsement, Voluntary Compensation, Longshoremen's and Harbor Workers' Compensation, Jones Act, and Outer-Continental Shelf coverages. The limit for Employer's Liability coverage shall be not less than $1 million each accident and shall be a separate policy if not included with Workers' Compensation coverage. Evidence of such insurance shall be an endorsement to the policy providing for a thirty (30) calendar days

prior written notice of cancellation or nonrenewal of a continuous policy to IPSC, by receipted delivery, and a Waiver of Subrogation in favor of IPA, IPSC, and LADWP, its officers, agents, and employees. Workers' Compensation/Employer's Liability exposure may be self-insured provided that IPSC is furnished with a copy of the certificate issued by the state authorizing Contractor to self-insure. Contractor shall notify IPSC, by receipted delivery, as soon as possible of the state withdrawing authority to self-insure.

b. Commercial General Liability: Commercial General Liability with Blanket Contractual Liability, Products and Completed Operations, Broad Form Property Damage, Premises and Operations, Independent Contractors, and Personal Injury coverages included. Such insurance shall provide coverage for total limits actually arranged by Contractor, but not less than $2 million Combined Single Limit and be specific for the Contract. Should the policy have an aggregate limit, such aggregate limits should not be less than $4 million. Umbrella or Excess Liability coverages may be used to supplement primary coverages to meet the required limits. Evidence of such coverages shall be on IPSC's Additional Insured Endorsement Form or on an endorsement of the policy acceptable to IPSC and provide for the following:

(1) To include IPA, IPSC, LADWP, and their officers, agents, and employees as additional insured with the Named Insured for the activities and operations under and in connection with the Contract.

(2) That the insurance is primary and not contributing with any other insurance maintained by IPA, IPSC, or LADWP.

(3) A Severability-of-Interest or Cross-Liability Clause such as: "The policy to which this endorsement is attached shall apply separately to each insured against whom a claim is made or suit is brought, except with respect to the limits of the company's liability."

(4) That the policy shall not be subject to cancellation, change in coverage, reduction of limits or nonrenewal of a continuous policy, except after written notice to IPSC, by receipted delivery, no less than thirty (30) calendar days prior to the effective date thereof.

(5) A description of the coverages included under the policy.

c. Commercial Automobile Liability: Commercial Automobile Liability covering the use of owned, nonowned, hired, and leased vehicles for total limits actually arranged by Contractor, but not less than $1 million Combined Single Limit. Such insurance shall include Contractual Liability coverage. The method of providing evidence of insurance and requirements for additional insureds, primary insurance, notice of cancellation, and Severability-of-Interest shall be the same as required in the Commercial General Liability Section of terms and conditions.

d. Professional Liability: Contractor shall provide Professional Liability Insurance with Contractual Liability coverage included, covering Contractor's liability arising from errors and omissions made directly or indirectly during the execution and performance of the Contract and shall provide coverage of $5 million Combined Single Limit. Evidence of such insurance shall be in the form of a special endorsement of insurance and shall include a Waiver of Subrogation against IPA, IPSC, and LADWP, their officers, agents, and employees.

The policy shall not be subject to cancellation, change in coverage, reduction of limits, or nonrenewal of a continuous policy, except after written notice to IPSC, by receipted delivery, not less than thirty (30) calendar days prior to the effective date thereof.

e. Other Conditions:

(1) Failure to maintain and provide acceptable evidence of any of the required insurance for the required period of coverage shall constitute a major breach of Contract, upon which IPSC may immediately terminate or suspend the Contract. In addition or in the alternative, IPSC has the right (but not duty), to procure such insurance and (a) to submit a claim for the cost thereof against any Performance Bond supplied by Contractor, (b) to deduct the cost thereof from any monies due Contractor under the Contract or otherwise, and/or (c) to charge and collect the cost thereof from Contractor, payable upon demand. Such claim, deduction, or charge shall include an administrative fee of two (2) percent of the cost of procuring said insurance. Said insurance may be procured and maintained in the name of Contractor, IPA, IPSC, LADWP, and/or any combination thereof, as primary and/or secondary insured, all as IPSC may from time to time elect.

(2) Contractor shall be responsible for all subcontractors' compliance with these insurance requirements. The foregoing remedies in subsection (1) shall be available to IPSC against Contractor for any failure by any subcontractor to maintain and provide the required insurance.

9. Transportation: All shipments of hazardous materials under the Contract or in connection herewith shall be handled in accordance with current U.S. Department of Transportation regulations and all other applicable federal, state, and local laws and regulations.

10. Material Safety Data Sheets: Contractor shall furnish IPSC with a Material Safety Data Sheet (MSDS) for all hazardous materials furnished under the Contract, used, stored, or transported on or near IPP premises in connection with the Contract. The MSDS shall be furnished to IPSC on, or prior to, the date of the first delivery, use, storage, or transportation of the materials or equipment. If these Specifications require that Contractor furnish instruction books, the MSDS shall also be included in such books.

11. Contract Termination:

a. For Convenience or Security: IPSC reserves the right, by giving twenty (20) calendar days prior written notice (or such longer notice as IPSC may select) to Contractor, to terminate the whole or any part of the Contract at IPSC's convenience, whether or not Contractor is in default. IPSC also reserves the right to terminate the Contract, effective immediately upon notice, for purposes of security or safety of IPP facilities, persons who work at IPP facilities, or the public. In the event of termination for convenience, security, or safety, IPA will pay Contractor reasonable and proper termination costs (if, however, Contractor's Proposal includes cancellation charges, payment for termination costs shall not exceed the cancellation charges set forth therein). Contractor shall, after consultation with IPSC, take all reasonable steps to minimize the costs related to termination. Contractor shall provide IPSC with an accounting of costs claimed, including adequate supporting information and documentation and IPSC may, at its expense, audit the claimed costs and supporting information and documentation.

b. For Breach: IPSC may terminate the whole or any part of the Contract effective immediately upon notice, in the event Contractor is in material default, and without right on the part of Contractor to claim any termination costs. This right to terminate is in addition to, and not in lieu of, any other remedy provided in the Contract or otherwise provided by law or equity.

c. Limitation of Liability: In no event shall termination of this Contract, or any portion thereof, whether for convenience, security, safety, breach, or otherwise, constitute the basis for or result in any claim for consequential damages (including loss of anticipated profits or other economic damages) or punitive damages, and Contractor hereby releases IPA, IPSC, and LADWP, and their officers, directors, employees, agents, and representatives, from any and all such claims or liability.

12. Suspension of Work: IPSC reserves the right to suspend and reinstate execution of the whole or any part of the Contract and the Work without invalidating the provisions of the Contract. In the event the Work is suspended, Contractor will be reimbursed for actual direct unavoidable costs that it reasonably incurs as a result of the suspension. Claims for such cost reimbursement shall be submitted by invoice. Contractor shall use all reasonable means to minimize such costs, and shall allow IPSC to audit costs claimed. Contractor shall, upon request by IPSC, provide a projection of costs it anticipates to incur during any suspension, or continuation of suspension, contemplated by IPSC. In no event shall suspension constitute the basis for, or result in, any claim for consequential damages (including loss of anticipated profits or other economic damages) or punitive damages, and Contractor hereby releases IPA, IPSC, and LADWP, and their officers, directors, employees, agents, and representatives, from any and all such claims or liability.

13. No Waiver: No breach, noncompliance, or other failure to perform (collectively "breach") by Contractor, or any subcontractor, or of any Work shall be deemed waived unless expressly waived in writing by the President and Chief Operations Officer. No waiver by IPSC of any one breach shall be deemed to waive any other prior, concurrent, or subsequent breach. No exercise, or

failure to exercise, or delay in exercising any particular remedy by IPSC shall be deemed a waiver or preclude IPSC from subsequently invoking that remedy for that breach or any other breach. All remedies granted to IPSC in the Contract, or by law or equity, are cumulative and may be exercised in any combination or order.

PART F - DIVISION F2

DETAILED SPECIFICATIONS - DETAILED REQUIREMENTS

INTERMOUNTAIN POWER PROJECT

DELTA, UTAH

INTERMOUNTAIN GENERATING STATION

SPECIFICATIONS AND DOCUMENTS
FOR
VARIABLE FREQUENCY
I. D. FAN DRIVES

SPECIFICATION 133101.63.2203.1

TABLE OF CONTENTS

		Page thru Page	
I.	BIDDING REQUIREMENTS		
	Proposal Data	PD-1	PD-6
II.	SPECIFICATIONS		
	Part 1 - GENERAL REQUIREMENTS		
	Section		
	1A - General Description and Scope of the Work	1A-1	1A-13
	1B - General Equipment Specifications	1B-1	1B-35
	1C - Engineering Data	1C-1	1C-11
	1Q - General Quality System Requirements	1Q-1	1Q-3
	1S - Seismic Design	1S-1	1S-6
	Part 2 - TECHNICAL REQUIREMENTS		
	Section		
	2A - Medium Voltage Variable Frequency Drives	2A-1	2A-27
	2B - VFD Isolation (VFDI) Transformers	2B-1	2B-11
	2C Medium Voltage Induction Motors	2C-1	2C-14
	Drawing List	1 page	

IP7014453

PROPOSAL DATA

PD.1 GENERAL. Each bidder shall submit complete and definitive information on his offering in sufficient detail to permit a complete analysis of the Proposal. The requirements stated in the Instructions to Bidders relative to information submittal shall be followed.

The requirements for information contained in this section are basic requirements. Additional information shall be provided as requested by the Engineer.

The blank data sheets included in this section shall be completely filled in. The data listed therein shall not relieve the Contractor of his responsibility for meeting the requirements of the detailed specifications.

The bidder shall not alter the original Proposal Data section page numbers. If it becomes necessary to add pages, at other than the end of the section, a suffix such as a, b, c, etc., shall be added to the original number to designate the added page number. Pages added at the end of the section shall be numbered sequentially by continuation of originally established numbering.

If the bidder finds it necessary to reproduce any of the Proposal Data pages, methods of reproduction shall not appreciably reduce or enlarge the reproduced pages. In the process of preparing the bid evaluation, the right-hand portion of Proposal Data pages which have a trim line will be trimmed off and matched with corresponding pages received from other bidders. It is therefore desirable that these pages match as nearly as practicable with the original left-hand portion of the page when placed side by side. The bidder shall make no changes to the left of the trim line.

Where alternates are indicated in the Proposal or Proposal Data, the bidder shall provide complete information for each alternate.

Write entries boldly with black ink or type entries using black ink. Do not use ballpoint pens or blue ink.

PD.2 DRAWINGS. Drawings shall be submitted with the Proposal in sufficient detail to permit evaluation of the equipment offered and to permit preliminary arrangement studies to be made:

> Plan views of the existing control house indicating equipment layout. Outdoor cooling equipment, if required, shall also be shown. Provide estimated weights.

IP7014454

External interconnection one-line diagram showing all power, control, and protection cabling required to complete the VFD onsite.

Harmonic study.

PD.3 SUPPLEMENTARY INFORMATION. The following supplementary information shall be submitted with the Proposal:

Complete description of proposed variable frequency drive. This shall include a description of shipping components and field assembly installation.

Summary description of codes and standards used if different than specified, including a review of major differences.

Identification of any modifications required to IPSC's ID fan system, composed of ID fan motor, ID fan, connecting shaft, bearings, and cable connecting the ID fan motor to the VFD system to allow this equipment to operate with the VFD while maintaining a normal 30 year lifetime of the ID fan system.

Documentation indicating the Contractor's VFD system does not produce torsional vibrations, shaft torsional resonance, or torque pulsations within the connecting shaft of the ID fan system.

Documentation indicating the Contractor's VFD system will not create accelerated ID fan system bearing wear due to common mode voltages delivered by high frequency PWM or other signals from the Contractor's inverter drive.

Documentation indicating the Contractor's VFD system does not contribute to insulation breakdown of the end turns of the motor winding.

Provide names and other contact information of five purchasers of the proposed VFD system applied to motors of 3,000 hp and above who have had the equipment installed and operating for at least 2 years.

Preliminary spare parts list.

Input current including harmonic content at 25, 50, 75, and 100 percent load.

Provide composite data on mean time to failure and mean time to repair for typical components contained within the VFD system and shown by operating experience to fail or require replacement.

IP7014455

Provide a detailed description of the installation instructions of the proposed drive system including all of its components and any modifications to existing equipment.

Provide a description of the failure mode if control power is lost to the VFD control system.

Provide a description of the failure modes of the power switching devices (SCR, GTO, diode, IGBT, IGCT, etc.) or switching device control that will allow the drive system to continue to operate without tripping the fan.

Provide a description of accelerating and decelerating torque programming capabilities and other pertinent capabilities and limitations.

Preliminary schedule.

Harmonic calculation.

Efficiency (at the input to VFD isolation transformer) graph with Y-axis indicating 25, 50, 75, 100 percent torque and X-axis indicating 25, 50, 75, and 100 percent frequency.

Catalog brochures.

Complete list of required maintenance tools as discussed in Section 1B. The listing shall include a complete description and quantity of each item.

Information specified in the Instructions to Bidders.

Equipment storage requirements including inside or outside requirements, requirements for controlled temperature or humidity, etc.

Description of manufacturing, testing, and inspection procedures.

Written description, logic diagrams, or ladder diagram indicating recommended operating sequence.

Maintenance activities required by the manufacturer and/or by the Contractor to provide adequate storage and to maintain valid material and equipment warranties.

Motor Information from Article 2C.8.

Transformer Information from Article 2B.

IP7014456

PD.4 EQUIPMENT AND MATERIAL DATA. The information required on the following pages is to assist the Engineer and IPSC in evaluating the Technical Proposal.

The data listed herein is stated for definitive purposes and for the convenience of IPSC and the Engineer.

IP7014457

_____
(Bidder's Name)

VFD isolation transformer rating (kVA) _____

System input voltage _____

System output voltage _____

Rated drive output power (continuous kVA) _____

Rated drive output current (continuous A) _____

Nominal load power (HP) _____

Rated VFD input current (A) _____

Nominal VFD input current at 8,200 hp output (A) _____

Drive type code/frame size _____

Rectifier pulse number _____

Auxiliary power consumption including pumps, lights, etc (kVA) _____

Fundamental VFD power factor at input to VFD

Isolation transformer

At 25 percent rated load _____

At 50 percent rated load _____

At 75 percent rated load _____

At 100 percent rated load _____

Total VFD power factor at input to VFD

Isolation transformer

At 25 percent rated load _____

At 50 percent rated load _____

IP7014458

_____
(Bidder's Name)

At 75 percent rated load _____

At 100 percent rated load _____

Efficiency at input to VFD isolation transformer

At 25 percent rated load _____

At 50 percent rated load _____

At 75 percent rated load _____

At 100 percent rated load _____

Maximum heat loss (kW) _____

Control frequency range (Hz) _____

Accuracy of speed control (percent of nominal speed) _____

IP7014459

PART 1 - GENERAL REQUIREMENTS

TABLE OF CONTENTS

		Page
Section 1A - GENERAL DESCRIPTION AND SCOPE OF THE WORK		1A-1 thru 1A-13
1A.1	General	1A-1
1A.2	Work Included Under These Specifications	1A-2
1A.3	Miscellaneous Materials and Services	1A-4
1A.4	Work Not Included Under These Specifications	1A-5
1A.5	Supplier's Services	1A-5
1A.6	Mill and Factory Witness Tests	1A-8
1A.7	Schedule	1A-8
Section 1B - GENERAL EQUIPMENT SPECIFICATIONS		1B-1 thru 1B-35
1B.1	General	1B-1
1B.2	Referenced Standards	1B-1
1B.3	Materials and Equipment	1B-1
1B.4	Identification	1B-1
1B.5	Preshipment Inspection	1B-1
1B.6	Materials List	1B-2
1B.7	Hazardous Materials	1B-2
1B.8	Correction of Errors	1B-2
1B.9	Numbering System	1B-2
1B.10	Nameplates	1B-2
1B.11	Factory Assembly	1B-3
1B.12	Consolidated Shipments	1B-3
1B.13	Packaging and Identification of Spare Parts	1B-3
1B.14	Special Shipping Requirements	1B-4
1B.15	Welding	1B-4
1B.16	Service Conditions	1B-4
1B.17	Shop Coating	1B-4
1B.18	Protection	1B-6
1B.19	Tools	1B-6
1B.20	Alignment and Balance	1B-7
1B.21	Noise Level	1B-7
1B.22	Design Coordination	1B-7
1B.23	Lubrication	1B-7
1B.24	Enclosed Gear Drive Units	1B-7

IP7014460

		Page
1B.25	Safety Guards	1B-8
1B.26	Shaft Couplings	1B-8
1B.27	Equipment Bases	1B-8
1B.28	Piping	1B-9
1B.29	Control Air Piping and Tubing	1B-9
1B.30	Instrument Primary Piping and/or Tubing	1B-10
1B.31	Instrument Valves	1B-12
1B.32	Compressed Air	1B-13
1B.33	Instrumentation	1B-13
1B.34	Control Power	1B-19
1B.35	Auxiliary Power	1B-20
1B.36	Raceway	1B-20
1B.37	Electrical Enclosures	1B-22
1B.38	Classification Identification of Electrical Equipment in Hazardous Areas	1B-23
1B.39	Wiring	1B-23
1B.40	Equipment Safety Grounding	1B-26
1B.41	Pin and Socket Connectors	1B-27
1B.42	Termination of 600 Volt Power Cable	1B-27
1B.43	Termination of Cables Rated Above 600 Volts	1B-28
1B.44	Terminal Blocks	1B-28
1B.45	Fuse Blocks	1B-29
1B.46	Fuses	1B-29
1B.47	Electrical Accessory Devices	1B-29
1B.48	Molded Case Circuit Breakers	1B-31
1B.49	Weatherproofing	1B-32
1B.50	Factory Prewired Electronic Systems Cabinets	1B-32
1B.51	Solid-State Logic Systems	1B-32
1B.52	Motor Control	1B-33
Typical Schematics for Combination Starters		1B-35
Section 1C - ENGINEERING DATA		1C-1 thru 1C-11
1C.1	General	1C-1
1C.2	Correspondence	1C-1
1C.3	Review of Engineering Data	1C-2
1C.4	Performance Curves	1C-2
1C.5	Design Data	1C-2
1C.6	Test and Inspection Data	1C-2
1C.7	Motor Information	1C-2
1C.8	Drawings	1C-2
1C.9	Wiring Diagrams	1C-4
1C.10	Instruction Manuals	1C-5
Motor Information Sheets		1C-9 thru 1C-11

IP7014461

Page

Section 1Q - GENERAL QUALITY SYSTEM REQUIREMENTS		1Q-1 thru 1Q-3
1Q.1	Purpose/Scope	1Q-1
1Q.2	Quality System	1Q-1
1Q.3	Quality System Manual	1Q-2
1Q.4	Subcontractors	1Q-2
1Q.5	Inspections by Engineer	1Q-2
1Q.6	Receipt Inspection	1Q-3
Section 1S - SEISMIC DESIGN		1S-1 thru 1S-6
1S.1	General	1S-1
1S.2	Seismic Forces	1S-2
1S.3	Seismic Design	1S-2
1S.4	Documentation	1S-4
Site Meteorological and Seismic Data Sheet		1S-6

IP7014462

Section 1A - GENERAL DESCRIPTION AND SCOPE OF THE WORK

1A.1 GENERAL. This section covers the general description, scope of the work, and supplementary requirements for equipment, materials, and services included under these specifications.

The equipment and materials covered by these specifications will be incorporated in the Intermountain Power Project Induced Draft Fan (IDF) Variable Frequency Drive (VFD) Replacement Project.

The Intermountain Power Project site is located at 850 West Brush Wellman Road, Delta, Utah 84624.

Existing System Description. The Intermountain Power Project (IPP) power plant consists of two 840 MW units. Intermountain Power Services Corporation (IPSC) is in the process of upgrading the units to 980 MW.

Each unit has four induced draft fans (IDF) rated 7415 hp at 954 rpm. The motors are six phase synchronous, eight pole, 3876 volt machines. Each motor has two three-phase windings. Winding 1 is phase shifted 30 electrical degrees from Winding 2. The motor windings are not reconnectable to change the motor voltage. Each motor is controlled by a pair of current source, load commutated inverter (LCI) variable frequency drives (VFD). Each drive has an input transformer to connect the 3876 volt drive to the 6900 volt circuit breaker. The transformer pairs are connected delta-delta and delta-wye such that the 6900 volt bus sees harmonics associated with 12-pulse rectification at full load of the drives. The motors and drives are about 20 years old and were manufactured by Westinghouse. The drive controls are a combination of analog and digital technologies. New System Requirements. The replacement equipment must include features that will fulfill the following needs/requirements:

- Harmonic content on the 6900 volt bus must meet IEEE 519.
- Power factor at the 6900 volt feed to each ID fan shall be 0.95 or better.
- Existing fan capacities shall not be decreased.
- External controls and interlocks of the new equipment shall coordinate with the existing plant control system.
- New components proposed must not degrade rating or service life of existing components that are being reused.
- Extend service life of ID fan system.

IP7014463

- Equal or better reliability and maintainability of ID fan system.
- New equipment must fit in existing space.
- New equipment must allow any existing conduits that are encased in concrete to be reused for their same original purpose to minimize the installation costs.
- Equipment for two fans must be replaced and checked out during a scheduled 24-calendar day outage.

Long Range Goals. The replacement equipment shall have features that will provide or make provision for the following goals:

- Increased fan capacity to allow a 980 MW generating capacity with 3 fans operating with additional pollution control equipment added..
- Replace existing transformers.

1A.2 WORK INCLUDED UNDER THESE SPECIFICATIONS. The work under these specifications shall include furnishing FOB at the Intermountain Power Project Units 1 and 2 site the medium voltage variable frequency drives, and providing miscellaneous materials and services complete as specified herein and in accordance with the Contract Agreement.

All equipment and materials required for complete medium voltage variable frequency drive systems shall be furnished, except as specified otherwise in these specifications. The equipment, materials, and services to be furnished shall include, but not necessarily be limited to, the following major items:

> The furnishing of all plant, labor, equipment, appliances, materials, software, training, and the performance of all operations in connection with the analysis or study, design, fabrication, testing, delivery, field setup, and field checkout of integrated medium voltage variable frequency drive (VFD) systems, to operate the ID fans. Each set shall be an engineered system composed of input switchgear, a variable frequency drive, self-contained closed cycle cooling system, and output connections to an existing ID fan motor. Drive equipment shall be housed in the existing control building. Equipment and software furnished shall be suitable for powering IPSC's ID fan motors or new motors provided by the Contractor. The Contractor shall identify any modifications required to IPSC's ID fan system, composed of ID fan motor, ID fan, connecting shaft, bearings, and cable connecting the ID fan motor to the VFD system to allow this equipment to operate with the VFD and still maintain a normal lifetime of the ID fan system. The Contractor shall also provide services to coordinate the proper selection of IPSC's ID fan system and programming of the VFD software. This includes, but is not limited to,

IP7014464

coordination of information transfer associated with IPSC's ID fan system, such as WK^2 of the fan, critical speeds, starting/running torque, and meetings with the new or existing fan motor supplier.

Each variable frequency drive system shall consist of all system components required to meet the performance, protection, safety, testing, and certification criteria of these specifications. These components may include incoming harmonic filter/power factor correction unit, input isolation transformer, VFD converter/DC-link/inverter, and output filter. The VFD system shall represent a fully integrated package. All material and labor necessary to interconnect any VFD system elements shall be included, even if shipped separately, except as specified otherwise herein. The VFD shall be sized to operate the motor continuously at the horsepower rating multiplied by the motor service factor.

It is intended that the Contractor's standard product, with available options, be provided under this specification. Any modifications to a standard product provided to meet this specification shall be performed by the Contractor only. The Contractor shall explicitly indicate all exceptions or deviations to this specification in his proposal where identified in the Proposal Section. Only exceptions or deviations identified in the Proposal Section will be considered for negotiation and possible inclusion in the conformed contract.

The main VFD system components shall be completely factory prewired, assembled, and then tested as a complete package by the Contractor, to assure a properly coordinated, fully integrated drive system.

The Contractor shall conduct a certified startup of all Contractor-furnished equipment to confirm conformance to this specification.

Any third party certification, safety or protection requirements shall be applied to the VFD system as a whole. Certification or protection of system elements or individual components by themselves is not acceptable.

IPSC will test the equipment after erection to demonstrate its ability to operate under the conditions and fulfill the guarantees as set forth herein. If the tests indicate that the equipment fails to meet guaranteed performance, the Contractor shall make additional tests and modifications until the equipment performs as specified.

The Contractor shall provide drawings and other engineering data, manufacturer's field services, tools, instruction manuals, recommended spare parts list, and miscellaneous materials and services, and shall participate in design conferences, all as specified herein.

IP7014465

Equipment, materials, and accessories furnished shall be delivered to the Intermountain Power Project site where they will be received, unloaded, stored, and erected under separate Purchase Order. Deficiencies shall be sufficient cause to reject equipment. Unloading from carrier and storing will not constitute acceptance.

1A.3 MISCELLANEOUS MATERIALS AND SERVICES. Miscellaneous materials and services not otherwise specifically called for shall be furnished by the Contractor in accordance with the following:

All nuts, bolts, gaskets, special fasteners, backing rings, etc., between components and equipment furnished under these specifications.

All piping integral to or between any equipment furnished under these specifications, except as otherwise specified.

All necessary connections for IPSC's piping and instruments.

All necessary instrument, power and control wiring and raceways integral to any equipment furnished under these specifications. This shall include terminal blocks and internal wiring to these terminal blocks for equipment requiring external connection.

Coupling guards for all exposed shafts and couplings.

Leveling blocks, soleplates, thrust blocks, matching blocks, and shims.

Erection drawings, prints, information, instructions, and other data for use by IPSC's erection subcontractor.

Detailed storage requirements and lubrication requirements (including frequencies) for use by IPSC's erection subcontractor.

All special tools or lifting beams and lugs for offloading.

The use of all special tools required for erection of the equipment, exclusive of the maintenance tools specified to be furnished under Section 1B. Erection tools shall remain the property of the Contractor and all shipping costs to and from the jobsite shall be at the Contractor's expense.

1A.4 WORK NOT INCLUDED UNDER THESE SPECIFICATIONS. Purchaser will furnish the following items of work:

ID fan system, composed of ID fan motor (if existing motor is used), ID fan, connecting shaft, bearings, and cable connecting the ID fan motor for each ID

IP7014466

fan. The connecting cable will be shielded 8 kV Type MV-90 single conductor medium voltage power cable. The WK^2 of the fan is 347,700 lb-ft^2. The fan is a variable torque load. High breakaway/starting torque is required.

One or two 6.9 kV incoming power feeds to each Contractor-furnished VFD system.

One 125 volt dc power feed to each Contractor-furnished VFD.

Control wiring from IPSC's plant control system to the VFD control system.

Supply and installation of power cables as required to interconnect the VFDs, isolation transformers, input circuit breakers, and ID fan motors.

Receiving, unloading, storing, and field erection of all equipment.

Motor controls and starters not otherwise specified to be furnished under these specifications.

Foundations, foundation bolts, bolt sleeves, and equipment bases.

Grouting materials and the placing thereof.

Permanent electric wiring to connect equipment terminal boxes to the plant electrical system.

Lubricants and fuels for operation.

Solvents and cleaning materials.

Finish painting of all equipment except as specified herein.

Operating personnel for startup and tests.

1A.5 CONTRACTOR'S SERVICES. The services called for in WORK INCLUDED UNDER THESE SPECIFICATIONS shall be in accordance with the following.

1A.5.1 Submittal of Engineering Data. Drawings and other engineering data for the specified equipment and materials are vital to the design and subsequent construction of the entire project.

The Contractor will be required to submit drawings and engineering data in accordance with the schedule and requirements specified herein to assure compliance with the overall construction and operating schedule.

IP7014467

The Contractor shall allow a reasonable amount of time for mailing, processing, and Engineer's review of drawings and data in his engineering schedule and procurement/production/ shipping schedule.

1A.5.2 Manufacturer's Technical Services. The Contractor shall furnish the services of one or more manufacturer's technical service representatives. The service representatives shall be technically competent, factory trained, experienced in the installation and operation of the equipment, and authorized by the manufacturer to perform the work stipulated.

The Contractor shall also furnish the field services of direct representatives of the manufacturers of auxiliary equipment which has rotating parts or which may require field inspection and adjustment to assure proper operation.

The manufacturer's technical service representatives shall furnish written certification to the Engineer that the equipment has been inspected and adjusted by them or under their direction and that it is ready for service, all of which shall be done before initial operation of the equipment.

The duties of manufacturer's technical service representatives may include, but may not be limited to, the following:

a. Providing technical advice to assist the erection supplier in installing the equipment.

b. Inspecting and testing the equipment after installation and directing any changes or adjustments required to assure proper operation.

c. Providing technical direction during startup and initial operation of the equipment.

d. Directing the correction of any design or manufacturing errors.

e. Instructing IPSC's personnel in the operation and maintenance of the equipment.

f. Providing services required as a condition to providing the warranties and guarantees specified.

For each pair of variable frequency drive systems, the lump sum prices stated in the Proposal shall include 24 days of service and two round trips to the site for the field service representatives, to provide the services specified under Items (a), (b), (c), and (f) above. If the number of days of service and/or the number of round trips actually required under Items (a), (b), (c), and (f) are more or less than the specified quantities, the Purchase Order

IP7014468

amount will be increased or decreased in accordance with the adjustment prices for manufacturer's technical services stated in the Proposal.

When, in the judgment of the Engineer, field service representative's time is required under Item (d) above solely and expressly for the purpose of correcting design or manufacturing errors, no payment will be made, nor will the time spent at the site while correcting such errors apply toward the days of service or round trips specified for Items (a), (b), (c), and (f) above.

When additional field service representative's time is required by IPSC under Item (e) above, the per diem rates for service time plus the rate for each round trip will be paid in accordance with applicable adjustment prices for manufacturer's technical services as stated in the Proposal.

The per diem rates shall include all costs associated with the service representative's work at the site, including local travel, local travel time wages, and living expenses. The round trip rate shall include all expenses for travel to and from the manufacturer's facilities and IPSC's site, including any salary costs for travel time. IPSC will not reimburse Contractor for air fare costs exceeding tourist class air fare unless unusual circumstances exist. The Contractor shall notify the Engineer of such circumstances.

A day of service (per diem) is defined as 8 man-hours at the site. The total number of days of service shall be defined as the total regular time man-hours at the site divided by eight.

1A.5.3 Design Conference. The Contractor's design engineer shall attend two design conferences at a time and place selected by the Engineer to discuss matters relative to the execution of this Purchase Order. The Contractor's design engineer shall attend additional design conferences as required by the Engineer thereafter to expedite the work.

1A.5.4 Instruction Manuals. Instruction manuals shall be furnished in accordance with the requirements stated in Section 1C of these specifications and as scheduled herein.

1A.5.5 Recommended Spare Parts. The Contractor shall provide a complete listing of recommended spare parts with unit prices FOB Intermountain Power Project site, not later than the date listed in the Schedule of Activities. The listing shall include the manufacturer of each part, a description of each part (including industry standard part number if available), the assembly or equipment in which each part will be used, and recommended quantities to be stocked; shall classify the relative criticality of parts based on the manufacturer's experience; and shall list the lead time required for manufacture and delivery of each part.

IPSC will retain the option of purchasing any one or any combination of spare parts listed at the prices quoted until 6 months after final startup testing and acceptance.

IP7014469

1A.6 MILL AND FACTORY WITNESS TESTS. Supplementing the provisions of Sections 2A, 2B, and 2C concerning mill and factory witness tests, the Contractor shall notify the Engineer not less than 10 days prior to the date of each mill or factory witness test.

1A.7 SCHEDULE. The Contractor shall complete the specified activities in accordance with the milestone time periods and dates listed in addition to the timely delivery of the equipment and materials.

The Schedule of Activities included at the end of this article stipulates the milestone dates and time periods for the work included in this Purchase Order. It is necessary that the Contractor perform the activities shown on or before the dates indicated to avoid delay of the entire project.

1A.7.1 Activity Periods and Dates. The time periods and dates listed in the Schedule of Activities indicate the latest dates by which the listed activities shall be completed. Data, drawings, and lists for planning, engineering, and documentation may be submitted earlier than the indicated dates at the Contractor's option.

Equipment and materials shall be delivered within the time frame specified. IPSC will not be obligated to accept delivery or make payment for equipment delivered prior to the earliest acceptable delivery date.

1A.7.2 Engineering Schedule. The Contractor shall submit a schedule for engineering associated with the equipment being provided. Such schedules shall be updated and submitted by the first of each month until completion of the engineering effort.

1A.7.3 Procurement/Production/Shipping Schedule. The Contractor shall submit a detailed procurement/production/shipping schedule for the equipment and materials not later than the date indicated; thereafter, the schedule shall be updated as directed by the Engineer or Purchaser, but at least every 30 days.

1A.7.4 Reference Drawings. The following reference drawings are included with this specification:

See attached Drawing List.

The Contractor shall field verify the information shown on the referenced drawings for any information that is used in the design and fabrication of the variable frequency I.D. fan drive equipment. All travel and living expenses expended by the Contractor for field verification shall be included in the lump sum contract price.

IP7014470

1A.7.5 Schedule of Activities.

Activity	Days After Award of Purchase Order
Planning, Engineering & Documentation	
Contractor to participate in design conference	15
Contractor to deliver schedule of engineering to the Engineer	15
Contractor to deliver Quality System Manual to Engineer as specified in Section 1Q.	30
Contractor to deliver Inspection and Test Plan to Engineer as specified in Section 1Q.	30 days prior to first fabrication
Contractor to deliver Notification of tests/test/inspections to Engineer as specified in Section 1Q.	10 days prior to inspection
Contractor to deliver hazardous materials documentation to the Engineer	30 days after award of Purchase Order and with material lists
Contractor to deliver drawings to Engineer	
Outline drawings	30
Schematic and wiring diagrams	45
Input/Output list to plant control system	15

IP7014471

Activity	Days After Award of Purchase Order
Block diagram showing the basic control and protection systems specifying the protection, control, trip and alarm functions at the different locations, the reference signals and commands and the auxiliary supplies (i.e. air, oil, cooling water, electrical auxiliary supplies)	15
Electrical single-line diagram showing main and auxiliary circuitry, including main power input, switchgear, transformer, VFD, system earthing and auxiliary supplies - showing all CTs, PTs, relays, meters, etc., for the control, protection and operation of the drive system with electrical data (i.e. voltage, current, time ratings, impedances, and tolerances)	45
Equipment dimensions, including stub-up locations, shipping splits, and shipping weights	30
Nameplate drawings	15
Torsional analysis	30
Efficiency and power factor values	15
Startup and commissioning instructions and data	6 weeks prior to shipment

IP7014472

Activity	Days After Award of Purchase Order
VFD equipment interface information including dead, and seismic loads	30
Anchor bolt information including material, size, and projection	30
Certified report (including test data) for all system level tests	15 days after completion of system level tests
Schedule of system level tests including proposed test procedures	30 days prior to tests
Schedule of certified field startup and acceptance tests	30 days before shipment
Contractor to deliver completed Motor Information Sheets to Engineer	30
Contractor to deliver cost breakdown information to Engineer	15
Contractor to deliver cash flow projection to Engineer	15
Contractor to deliver initial detailed procurement/production/shipping schedule to Engineer	30
Contractor to deliver recommended detailed erection sequence and procedure for Engineer review	45
Contractor to submit "Proof Copy" of Instruction Manual(s) to Engineer	60 days prior to shipment

IP7014473

Activity	Days After Award of Purchase Order	
Contractor to distribute 12 copies each for Unit 1 and 2of accepted Instruction Manuals as designated by the Engineer	30 days prior to shipment	
Contractor to deliver recommended spare parts list to Engineer	30 days prior to shipment	
Contractor to notify Engineer for preshipment inspection	30 days prior to shipment	
Contractor to notify Engineer of mill or factory witness test(s)	15 days prior to date of test(s)	
	Earliest Acceptable Delivery Date	Latest Acceptable Delivery Date
Contractor to deliver equipment to jobsite		
Unit 2 (2 fans)	January 2, 2004	January 31, 2004
Unit 1 (2 fans)	January 2, 2005	January 31, 2005
Unit 2 (2 fans)	January 2, 2006	January 31, 2006
Unit 1 (2 fans)	January 2, 2007	January 31, 2007
24 day plant outage for installation of equipment, final startup testing and acceptance.	Date (exact dates to be determined after contract award)	
Unit 2 (2 fans)	March, 2004	
Unit 1 (2 fans)	March, 2005	
Unit 2 (2 fans)	March, 2006	
Unit 1 (2 fans)	March, 2007	

IP7014474

Section 1B - GENERAL EQUIPMENT SPECIFICATIONS

1B.1 GENERAL. These General Equipment Specifications apply in general to all equipment and materials and are supplementary to the detailed specifications. If requirements specified herein are in conflict with requirements specified in the detailed specifications, the detailed specifications shall govern to the extent of such conflict.

The Proposal shall be based upon the use of equipment and materials complying fully with the requirements specified in this Section 1B. It is recognized that the Contractor may have standardized on the use of certain components, materials, processes, or procedures different than those specified herein. Alternates in addition to the base proposal on the basis of supplying the Contractor's standard components, materials, processes, or procedures will be considered. The alternate proposal shall clearly stipulate the alternate proposed, the specific exceptions to the specifications, and the price change applicable for supplying such alternate.

1B.2 REFERENCED STANDARDS. Reference to the standards of any technical society, organization, or association, or to the laws, ordinances, or codes of governmental authorities shall mean the latest standard, code, or specification adopted, published, and effective at the date of taking bids unless specifically stated otherwise in these specifications.

The specifications, codes, and standards referenced in these specifications (including addenda, amendments, and errata) shall govern in all cases where references thereto are made except where they conflict with these specifications. In case of conflict between the referenced specifications, codes, or standards and these specifications, the latter shall govern to the extent of such difference.

1B.3 MATERIALS AND EQUIPMENT. Unless specifically provided otherwise in each case, all materials and equipment furnished for permanent installation in the work shall conform to applicable standard specifications and shall be new, unused, and undamaged.

Asbestos containing materials will not be allowed.

Flanges and fittings manufactured in the People's Republic of China will not be allowed.

1B.4 IDENTIFICATION. All correspondence, shipping notices, specifications, engineering data, and other documents pertaining to the equipment and materials furnished under these specifications shall be identified by IPSC's name, the project name, the unit number, the specification number, and the Engineer's project number.

1B.5 PRESHIPMENT INSPECTION. IPSC and Engineer reserve the right to inspect the equipment prior to shipment.

IP7014475

The Contractor shall notify the Engineer of all shipments not less than 10 days prior to the date of shipment to allow IPSC and Engineer to inspect the equipment if so desired.

1B.6 MATERIALS LIST. The Contractor shall prepare and submit with the first shipping notice two copies of an itemized materials list covering all material and equipment furnished under these specifications. The materials list shall be in sufficient detail to permit an accurate determination of the completion of shipment.

1B.7 HAZARDOUS MATERIALS. All shipments of hazardous materials shall be identified on the materials list. A copy of the hazardous materials documentation required by the article entitled MATERIAL SAFETY DATA SHEETS in the Detailed Specifications - Special Conditions shall be included with the materials list and shall also be included with the shipping papers attached to the shipment.

1B.8 CORRECTION OF ERRORS. Equipment and materials shall be complete in all respects within the limits herein outlined. All errors or omissions required to be corrected in the field shall be done by the manufacturer or his duly authorized representative at the Contractor's expense.

1B.9 NUMBERING SYSTEM. The Engineer will establish an identification numbering system to provide consistent numbering throughout the generating unit. All electrical devices, control and instrumentation equipment, valves, and other items of similar nature shall be permanently identified with the identification number supplied by the Engineer. Except as specified otherwise in these specifications, the identification shall be engraved on stainless steel tags, laminated phenolic tags, nameplates, or an equally permanent method at the option of, and as acceptable to, the Engineer and shall be permanently affixed to the device. The Engineer's identification numbers shall also be included on the manufacturer's drawings.

1B.10 NAMEPLATES. Nameplates shall be furnished for all equipment when specified in the detailed specification sections.

Nameplates shall be laminated white phenolic engraving stock with black core, or 2 ply vinyl white with reverse engraved black fill as manufactured by B. F. Plastics of Lawrence, Ohio, or acceptable equal. The lettering shall not be less than 3/16 inch high. As space permits, nameplates shall have an overall minimum size of 3/4 inch by 3 inches for small equipment nameplates, and 2 inches by 8 inches minimum for major equipment nameplates. The nameplate size shall be subject to acceptance by the Engineer during drawing review.

Nameplates for equipment located in nonair-conditioned areas shall be attached with stainless steel panhead screws, rivets, or drive screws. Nameplates in air-conditioned rooms may be attached with 3M Scotch 468 or acceptable equal adhesive tape. Nameplates shall be not less than 1/16 inch thick when attached with adhesive, and not less than 1/8 inch thick when attached with rivets or screws.

IP7014476

1B.11 FACTORY ASSEMBLY. Equipment shall be shipped completely factory assembled, except when the physical size, arrangement or configuration of the equipment, or shipping and handling limitations make the shipment of completely assembled equipment impracticable, in which case the equipment shall be assembled and shipped as stated in the Contractor's proposal.

When proposals are submitted without statements describing sectional shipments, it will be understood that no field assembly of the equipment will be required and the Contractor shall be responsible for all costs encountered in the field for assembly of sections, accessories, or appurtenances not listed in the Proposal as requiring field assembly.

All separately packaged accessory items and parts shall be shipped with the equipment. Containers for separately packaged items shall be marked so that they are identified with the main equipment. An itemized packing slip, indicating what is in that container only, shall be attached to the outside of each container used for packaging. A similar list shall be inside of each container. A master packing slip, covering all accessory items for a given piece of equipment which are shipped in separate containers, shall be attached to one container.

1B.12 CONSOLIDATED SHIPMENTS. Except where authorized by the Engineer in writing, the Engineer will not accept direct shipments of Contractor-furnished materials and equipment from Subcontractor. The Contractor shall assemble shipping units composed of those items of materials and equipment which he obtains from Subcontractors. Shipping unit assembly shall be at one of the Contractor's regular business addresses. Each item shall be tagged with its individual identification used on the drawings for this Contract Agreement and shipped as part of a shipping unit to the construction site. All shipments from the Contractor's shipping unit assembly location shall be packaged and identified as indicated in this section. The Contractor shall state in his proposal the minimum quantity of materials and equipment he will assemble as a shipping unit, his proposed tagging system for individual items of material and equipment included as part of a shipping unit, and the assembly location for shipping units.

1B.13 PACKAGING AND IDENTIFICATION OF SPARE PARTS. Spare parts shall be shipped in heavily constructed wooden boxes. The boxes shall be designed as permanent storage enclosures. Separate boxes shall be used for the spare parts for each major piece of equipment. Where applicable, boxes shall be designed and constructed for return shipment of damaged or worn components for repair.

Spare parts shall be protected from damage due to moisture and dirt accumulation during an extended storage period by use of special coatings, airtight membranes, bags of desiccant, or other means acceptable to the Engineer.

IP7014477

Each box shall be marked with the large painted legend as follows:

INTERMOUNTAIN POWER SERVICE CORPORATION
INTERMOUNTAIN POWER PROJECT
SPARE PARTS FOR __(Name of Equipment)__
ERECTION SUPPLIER DO NOT OPEN EXCEPT WITH
IPSC'S PERMISSION

A weatherproofed itemized list of the contents shall be attached to the outside of each box. A similar list shall be inside each box.

1B.14 SPECIAL SHIPPING REQUIREMENTS. Where specified, the manufacturer shall mount and ship impact recorders on each railcar transporting the specified equipment. The impact recorders shall be mounted at the factory to provide a permanent record of the magnitude of axial, transverse, and vertical forces to which the equipment will be subjected while in transit. The custody of the impact recorders upon arrival at the plant site shall be the responsibility of the manufacturer's field representative. The recorder impact charts shall be delivered to the Engineer and shall become part of the furnished equipment.

1B.15 WELDING. If the manufacturer has special requirements relating to welding procedures for welds at the terminals of the equipment and if such welding is to be performed under separate specifications, the requirements shall be stated on the manufacturer's drawing of the affected part.

1B.16 SERVICE CONDITIONS. Unless specified otherwise, equipment and material furnished under these specifications shall be suitable for service at an altitude of 4700 feet above sea level, temperatures between -35° F and 45° F.

Equipment located outdoors shall also be suitable for exposure to solar radiation, fog, rain, snow, ice, coal dust, fly ash, wind, and windblown dust and sand.

Equipment located indoors shall also be suitable for exposure to water spray and dust, including coal dust, in some areas. Equipment located indoors where coal dust may be present shall also be suitable for hose washdown.

1B.17 SHOP COATING. Unless otherwise required by the Technical Requirements, the manufacturer's standard coating systems shall be applied in the shop to ferrous metal surfaces of equipment and materials. The coating systems shall provide resistance to corrosion caused by weather and industrial environments. Surfaces which will be inaccessible after assembly shall be protected for the life of the equipment.

Coating material and application shall conform to the regulations of the air quality management agency having jurisdiction. Materials shall be formulated to contain less than 0.06 percent lead or chromium in the dried film.

IP7014478

Surfaces shall be cleaned, prepared, and coated in accordance with the coating manufacturer's instructions and Steel Structures Painting Council Paint Application Specification No. 1 "Shop, Field, and Maintenance Painting." Surfaces to be painted shall be filled to provide a smooth uniform base for painting.

No coating shall be applied to surfaces within 3 inches of field welded connections.

1B.17.1 Control and Electrical Equipment. Control and electrical equipment, including panels, cabinets, switchgear, transformers, and motors, shall be finish painted. Exterior surfaces shall be the manufacturer's standard color. The interior portions of cabinets shall be gloss white.

Touchup paint shall be provided for repair painting of at least 25 percent of the finish painted equipment surface. The touchup paint shall be the same type and color as the shop applied material. Application instructions shall be provided.

1B.17.2 Mechanical Equipment. Mechanical equipment includes pumps, compressors, valves, valve operators, external piping surfaces, and other similar equipment.

If equipment will operate at temperatures above 200° F and will not be insulated, a high temperature coating system designed for the operating temperatures shall be applied.

1B.17.3 Structural Steel and Miscellaneous Metals. Structural steel and miscellaneous metals include items fabricated of steel such as plates and shapes, ladders, handrail, stair stringers, ducts, hangers, equipment and pipe supports, and similar fabrications.

1B.17.4 Rust-Preventive Compounds. Machined surfaces and other ferrous surfaces which should not be coated, but are subject to corrosion, shall be protected with rust-preventive compounds.

Rust-preventive compounds which are used to protect surfaces of equipment and piping that are exposed to feedwater or steam shall be completely water soluble.

Machined surfaces of weld-end preparations shall be coated with consumable rust-preventive compounds which will not affect the quality of the weld.

1B.17.5 Galvanizing. Structural steel members and steel assemblies specified to be galvanized shall be "pickled" after fabrication processes have been completed. Pickling shall remove scale, rust, grease, and other impurities. Steel shall be hot-dip galvanized in accordance with ASTM A123.

Where either member to be bolted is galvanized, erection and structural bolts shall be galvanized in accordance with ASTM A153.

IP7014479

1B.17.6 Documentation. Shop drawings shall identify the shop applied coating systems. Data to be provided shall include the coating system manufacturer's name and product designation, the degree of surface preparation, dry film thickness, finish color, and Material Safety and Data Sheets (MSDS). Documentation submittal shall conform to the requirements of Section 1C.

1B.18 PROTECTION. All equipment shall be boxed, crated, or otherwise suitably protected during shipment, handling, and storage. Equipment having antifriction or sleeve bearings shall be protected by weathertight enclosures.

Coated surfaces shall be protected against impact, abrasion, discoloration, and other damages. Surfaces which are damaged shall be repaired.

Electrical equipment, controls, and insulations shall be protected against moisture and water damage. All external gasket surfaces and flange faces, couplings, rotating equipment shafts, bearings, and like items shall be thoroughly cleaned, coated with rust-preventive compound, and protected with suitable wood, metal, or other substantial type covering to ensure their full protection. All exposed threaded parts shall be greased and protected with metallic or other substantial type protectors.

All piping, tubing, and conduit connections on equipment and other equipment openings shall be closed with rough usage covers or plugs. Female threaded openings shall be closed with forged steel plugs. The closures shall be taped to seal the interior of the equipment. Open ends of piping, tubing, and conduit shall be sealed and taped.

Returnable containers and special shipping devices shall be returned by the manufacturer's field representative at the Contractor's expense.

1B.19 TOOLS. The Contractor shall furnish and ship with each piece of equipment one set of all special tools required for dismantling and maintenance of the equipment. The tools shall be shipped in separate heavily constructed wooden boxes provided with hinged covers and padlock hasps.

Maintenance tools for each piece of equipment shall be boxed separately and the boxes shall be marked with the large painted legend as follows:

INTERMOUNTAIN POWER SERVICE CORPORATION
INTERMOUNTAIN POWER PROJECT
MAINTENANCE TOOLS FOR ____(Name of Equipment)_____
ERECTION SUPPLIER DO NOT OPEN EXCEPT WITH
IPSC'S PERMISSION

IP7014480

A weatherproofed itemized list of the contents shall also be attached to the outside of each box.

The maintenance tools shall include all special handling rigs, bars, slings, and cable. All maintenance tools shall be in new and unused condition and shall become the property of IPSC. The bidder's proposal shall include the list of maintenance tools which shall be furnished with the equipment.

In addition to the tools for maintenance and dismantling, the Contractor shall furnish the use of all special tools required for erection of the equipment. Erection tools shall remain the property of the Contractor and all shipping costs to and from the jobsite shall be at the Contractor's expense. Erection tools for each piece of equipment shall be boxed separately. Erection tools shall not be boxed with maintenance tools.

1B.20 ALIGNMENT AND BALANCE. All rotating parts shall be true and dynamically balanced. Excessive noise or vibration, in the opinion of the Engineer or IPSC, will be sufficient cause for rejection of the equipment. All rotating equipment shall be balanced at the factory.

1B.21 NOISE LEVEL. The equivalent "A" weighted sound pressure level for equipment furnished under these specifications (excluding drive motors) shall not exceed 85 dBA free field measured 3 feet horizontally from the base of the equipment and 5 feet above floor level. If the drive motors for the equipment are also furnished under these specifications, the combined sound pressure level of the motor and driven equipment shall not exceed 90 dBA free field. The sound pressure levels stated are decibels to a reference of 20 micropascals.

1B.22 DESIGN COORDINATION. The Contractor shall be responsible for the selection and design of all equipment and materials which will provide the best coordinated performance of the entire system. Components of rotating equipment shall be selected so that the natural frequency of the complete unit is not at or critically near the operating range of the unit. Where actual design characteristics of proposed components vary from those quoted in the Proposal or specified, the Contractor shall take these into account in the establishment of design criteria for related components.

1B.23 LUBRICATION. Equipment shall be lubricated by systems designed for continuous operation. Lubrication systems shall not waste lubricants and shall not require attention during startup and shutdown, or routine inspection more frequently than once weekly.

Oil lubricant level indicators shall be furnished and marked to indicate proper levels under both standstill and operating conditions.

1B.24 ENCLOSED GEAR DRIVE UNITS. Enclosed gear drive units furnished as a part of the equipment specified shall be designed for continuous service and shall be in accordance with the latest AGMA standards for the type of gear drive being furnished.

IP7014481

Each gear drive unit shall be capable of withstanding the motor torques developed during start, acceleration, and deceleration if stalled.

1B.25 SAFETY GUARDS. Guards shall be provided for protection of personnel from all exposed moving and/or rotating machine elements.

Each guard shall be fabricated from ASTM A36 steel plate having a minimum thickness of 3/16 inch and designed for easy installation and removal. Necessary supports and accessories shall be furnished with each guard.

Guards for outdoor installation shall be galvanized.

1B.25.1 Horizontal Shaft Equipment. Safety guards for horizontal shafts, shaft couplings, belt sheaves, etc., shall be of the inverted "U" design with sides extending to the equipment base or baseplate.

1B.25.2 Belt Guards. Belt guards shall be fabricated from 1/2 inch, 18 USS gauge, flattened, carbon steel expanded metal. Belt guards shall be complete with supports of 1/8 inch minimum thickness, accessories, and braces. The entire assembly shall be hot-dip galvanized after fabrication.

A permanent metal tag shall be attached to each belt guard. The tag shall indicate the manufacturer's model number, size, and style of replacement belt sets.

Grease fittings shall be extended through the safety guards. Each belt guard shall also be furnished with a hole suitable for insertion of a tachometer.

1B.26 SHAFT COUPLINGS. Shaft couplings shall be used between all drives and driven equipment. Couplings shall be attached to driver and driven shafts by press fits and keys. Couplings shall be of the all metal lubricated gear flexible type, Kop-Flex "Fast" or acceptable equal.

Shaft couplings shall be sized to transmit the maximum brake horsepower requirements of the driven equipment with a service factor of not less than 2.

On applications where the motor is furnished under separate specifications, the motor half coupling shall be machined to the motor shaft dimensions on the motor drawing reviewed by the Engineer, and shipped to the motor supplier for shop mounting. The responsibility for proper fit of the coupling halves shall rest with the Contractor.

1B.27 EQUIPMENT BASES. A cast iron or welded steel baseplate shall be provided for all rotating equipment which is to be installed on a concrete base. Each baseplate shall support the unit and its drive assembly and shall have pads for anchoring the units. Baseplates for

IP7014482

equipment subject to water or oil leakage shall be provided with a raised lip all around and shall have a threaded drain connection.

1B.28 PIPING. All piping shall be in accordance with ASME B31.1 - Power Piping. The following minimum requirements shall apply:

All piping other than control and instrument piping	ASTM A106 Grade B steel. 2-1/2 inches and larger shall be Schedule 40 minimum. 2 inches and smaller shall be Schedule 80 minimum.
Fittings	
2-1/2 inches and larger	Butt-weld type.
2 inches and smaller	Forged steel socket-weld type.
Valves	
2-1/2 inches and larger	Carbon steel, Class 150 minimum, butt-weld ends.
2 inches and smaller	Carbon steel, Class 600 minimum, socket-weld ends.

Joints shall be provided as required to facilitate assembly or disassembly of equipment. The joints shall be forged steel unions with hardened and ground stainless steel seats for piping 2 inches and smaller and shall be flanged joints for piping 2-1/2 inches and larger.

1B.29 CONTROL AIR PIPING AND TUBING. Control air piping and tubing shall comply with the requirements of ASME B31.1 - Power Piping.

Control air piping and tubing within control and instrument enclosures/racks shall be arranged to allow any device to be serviced, disconnected, or removed from the enclosure without disconnecting piping or tubing to other devices. Piping and tubing for external connections shall be terminated on a bulkhead plate utilizing bulkhead fittings for enclosures or unions for open racks. Each bulkhead termination shall be identified in a manner acceptable to the Engineer.

Air supply shutoff valves shall be provided for common air supply headers and for each individual air user. All tubing shall be blown clean with dry compressed air after routing but prior to attachment to devices at either end.

IP7014483

The Contractor shall furnish 20 percent spare fittings on the bulkhead plate for external connections.

Piping and tubing schematic, connection, and interconnection diagrams shall be submitted to the Engineer for acceptance.

1B.29.1 Signal Air. Signal air lines shall be 1/4 inch outside diameter, light drawn temper copper tubing, ASTM B75, joined with compression type brass fittings. Fittings shall be Swagelok, Parker A-Lok, or acceptable equal. Tubing runs greater than 2 feet shall be continuously supported along their entire length using copper or copper plated steel supports or acceptable equal. Tubing runs less than 2 feet shall be supported as required to minimize vibration and tube damage. Tubing bends shall be made without reducing the internal diameter of the tubing.

1B.29.2 Supply Air. All supply air lines shall be drawn temper copper, ASTM B88 Type K, except for tubing runs between the individual air user shutoff valve and the individual user which shall be light drawn temper copper, ASTM B75.

Supply air lines 1/2 inch nominal size and larger shall be drawn temper copper, ASTM B88 Type K, joined by brazing using copper fittings. Copper tubing and fittings shall be made using oxygen free or phosphorus deoxidized copper. Oxygen bearing tough pitch copper tubing and fittings are not acceptable. All changes in direction shall be made with fittings. Valves shall be Whitey Series 60 brass ball valves or acceptable equal, with valve size equal to the line size. Low points shall be provided with drain legs and drain valves. Supply air line supports shall be furnished to minimize vibration and tube damage, and shall be copper or copper plated steel or acceptable equal. Supports for both horizontal and vertical tubing runs shall be furnished at intervals not greater than 5 feet.

Supply air lines 3/8 inch outside diameter and smaller shall be light drawn temper copper, ASTM B75, joined with compression type brass fittings. Transitions from ASTM B88 Type K to/from ASTM B75 light drawn temper copper tubing shall be brazed to NPT. Fittings shall be Swagelok, Parker A-Lok, or acceptable equal. Threaded brass nipples may be used to connect air supply line accessories. Valves shall be Whitey 40 Series brass ball valves or acceptable equal. Where throttling is required, needle valves as manufactured by Whitey, Parker, or acceptable equal shall be furnished. Tubing runs greater than 2 feet shall be supported continuously along their entire length using copper or copper plated steel supports or acceptable equal. Tubing runs less than 2 feet shall be supported as required to minimize vibration and tube damage. Tubing bends shall be made without reducing the internal diameter of the tubing.

1B.30 INSTRUMENT PRIMARY PIPING AND/OR TUBING. Instrument primary piping and tubing is defined as the piping/tubing from the process connection root valve to the blowdown and the instrument valves. Instrument primary piping and tubing shall be in accordance with ASME B31.1 - Power Piping.

IP7014484

1B.30.1 Instrument Primary Tubing. Instrument primary tubing external to instrument enclosures/racks shall be 1/2 inch outside diameter stainless steel ASTM A213 TP316 with a minimum carbon content of 0.04 percent. ASTM A213 EAW (except average wall) is not acceptable. Tubing shall be joined with compression type or socket-weld type stainless steel fittings. Compression type fittings shall be Swagelok, Parker A-Lok, or acceptable equal. Socket-weld fittings shall be Cajon, Parker Weld-lok, or approved equal. Tubing wall thicknesses shall be 0.065 inch for 1,000 psi and below, and shall be 0.083 inch for pressures greater than 1,000 psi. Tubing material hardness shall not exceed Rockwell Rb90. Tubing supports shall be furnished to minimize vibration and tube damage. Tubing runs shall be supported continuously along the entire length both horizontally and vertically. Change in tubing direction shall be done with tube fittings or tube bending. Tubing bends shall be made without reducing the internal diameter of the tubing. All tubing shall be blown clean with dry compressed air after routing but prior to attachment to devices at either end.

1B.30.2 Control and Instrument Enclosure/Rack Tubing. Instrument process tubing within enclosures/racks shall be 1/2 inch outside diameter stainless steel ASTM A213 TP316 with a minimum carbon content of 0.04 percent, ASTM A213 EAW (except average wall) is joined with compression type or socket-weld type stainless steel fittings. Compression type fittings shall be Swagelok, Parker A-Lok, or acceptable equal. Socket-weld fittings shall be Cajon, Parker Weld-lok, or acceptable equal. Tubing wall thickness shall be 0.065 inch. Tubing material hardness shall not exceed Rockwell Rb90. Change in tubing direction shall be done with tube fittings or tube bending. Tubing bends shall be made without reducing the internal diameter of the tubing. All tubing shall be blown clean with dry compressed air after routing but prior to attachment to devices at either end.

Instrument tubing within enclosures/racks shall be arranged to allow any device to be serviced, disconnected, or removed from the enclosure/rack without disconnecting tubing to other devices. Tubing for external connections shall be terminated on a bulkhead plate utilizing bulkhead fittings for enclosures or unions for open racks. Each bulkhead termination shall be identified in a manner acceptable to the Engineer.

The Contractor shall furnish 20 percent spare fittings on the bulkhead plate for external connections.

Tubing schematic, connection, and interconnection diagrams shall be submitted to the Engineer for acceptance.

1B.30.3 Instrument Flexible Connection. Where flange type (direct mounting) manifolds are not utilized, the final connection from each instrument valve manifold or instrument valve to the instrument shall be 1/4 inch outside diameter tubing (EAW not acceptable). The tubing shall be ASTM A213 TP316 stainless steel with 0.035 inch wall thickness and maximum hardness of Rockwell Rb90. The final tubing connection shall be equipped with

IP7014485

Swagelok, Parker A-Lok, or acceptable equal stainless steel fittings and shall be arranged for easy removal without disturbing the instrument or instrument valve manifold.

1B.31 INSTRUMENT VALVES. All instrument valve manifolds, instrument shutoff valves, instrument equalizing valves, and instrument blowdown valves shall be designed, manufactured, and tested to conform with ASME B31.1 - Power Piping.

Each pressure instrument shall be preceded by an instrument shutoff valve or instrument valve manifold which shall be specifically designed for instrument shutoff service. In addition, each liquid filled instrument primary line shall be provided with a tee ahead of the instrument valve/manifold and blowdown valve(s) which is specifically designed for this service, except as otherwise acceptable to the Engineer. Each differential pressure instrument, when not provided with an instrument valve manifold, shall be provided with an instrument equalizing valve, two instrument shutoff valves, and two test tees with 1/4 inch tube plugs. Each remotely mounted static pressure instrument, when not provided with an instrument valve manifold, shall be provided with an instrument shutoff valve and test tee with 1/4 inch tube plugs.

1B.31.1 Instrument Valve Manifolds. Two-valve manifolds shall be provided for all remotely mounted static pressure instruments. Three-valve manifolds shall be provided for differential pressure instruments. Valve manifolds shall be as manufactured by Anderson-Greenwood, Swagelok, Hex, Dragon, or acceptable equal.

Instrument valve manifolds shall include the following features:

Stainless steel construction.

Grafoil packed stems.

Test elbows with 1/4 inch tube plugs (instrument side).

Compression type tube fittings shall be dual ferrule.

Where flange type (direct mounting) manifolds are used, they shall be acceptable to the Engineer.

1B.31.2 Instrument Shutoff, Instrument Equalizing, and Instrument Blowdown Valves. Instrument shutoff, instrument equalizing, and instrument blowdown valves shall be Whitey stainless steel Series 12N with grafoil packing, Anderson-Greenwood stainless steel Series H7HP, or acceptable equal. Blowdown valves shall be provided at the instrument for each instrument primary line except oil, draft, and vacuum services. Blowdown valves shall have the following features: globe pattern design, stainless steel construction, grafoil packed

IP7014486

stems, and shall have a minimum of 0.25 inch orifice. For systems having operating pressures above 600 psi, two blowdown valves in series shall be provided on each instrument primary line.

1B.32 COMPRESSED AIR. Filtered, dried, oil free compressed air will be supplied for operation of pneumatic instruments and control valves. Normal house service air will be supplied for operation of other pneumatic devices. The compressed air will be supplied at receiver pressure varying from 50 to 150 psi.

Pressure regulators shall be provided for pneumatic devices which operate at pressure levels other than receiver pressure. Pressure regulators shall be Fisher Controls Co. Model 67AFR with pressure gauge. Where pneumatic drives operate at full receiver air supply pressure, air filters shall be furnished. Air filters shall be Fisher Controls Co. Model 67AFD with pressure gauge.

1B.33 INSTRUMENTATION. Unless specified otherwise in other sections, all instrumentation components furnished with the equipment shall be in accordance with the following articles and shall be constructed to withstand the temperatures, pressures, and corrosive conditions encountered in the actual service. Instruments rated for hazardous area classifications shall be furnished where required by applicable code or the detailed specifications.

Scale ranges shall be suitable for the equipment and shall be submitted to the Engineer for acceptance.

All instruments requiring electrical wiring shall be provided with a 3/4 inch conduit hub if available.

1B.33.1 Limit Switches. Limit switches, except those integrally mounted on motor-operated valves, shall be selected from the following alternates:

> Namco Controls "Snaplock" Series EA-700-20000. Switches shall have not less than two normally open and two normally closed contacts.
>
> Namco Controls "Snaplock" Series EA-170-14100. Switches shall have not less than two normally open and two normally closed contacts.

1B.33.2 Pressure Switches. Pressure switches shall have a minimum of one SPDT switching element and shall be selected as follows:

> General static and differential pressure switches for normal static pressure applications shall be SOR, Inc.

IP7014487

Low differential pressure switches for low static pressure applications (below 500 psig) requiring combined indication and switch contacts shall be Dwyer Instruments, Inc.

The acceptability of each pressure switch with respect to range, overpressure capability, repeatability, and deadband shall be demonstrated to the Engineer. Substitution of switches by other manufacturers must be acceptable to the Engineer.

1B.33.3 Temperature Switches. Temperature switches shall be Allen-Bradley Bulletin 837 or acceptable equal with NEMA 4 enclosures. Standard length stainless steel armored capillary tubes shall be furnished where required. Thermowells shall be furnished to allow removal of the capillary tube while the equipment is in service and shall be as specified in this Section 1B under the article entitled Thermowells. The acceptability of each temperature switch with respect to range, repeatability, and deadband shall be demonstrated to the Engineer.

1B.33.4 Float Type Level Switches. Level switches shall be as manufactured by Magnetrol International or acceptable equal having float and body construction appropriate to the service conditions of the systems to which they are connected. Switch elements shall be of the vibration resistant snap acting type magnetically coupled to the float. Two switch elements shall be available at each level point monitored. Each switch element shall be double-throw construction. Switch element leads shall be of high temperature construction and terminated on terminal blocks within the switch housing. Switch housings shall be NEMA Type 4, unless otherwise specified.

1B.33.5 Radio Frequency Probe Type Level Devices. Radio frequency (RF) probe type level instrument systems shall be manufactured by Drexelbrook Engineering, Magnetrol, or acceptable equal. Level instruments furnished shall be appropriately constructed to withstand the service conditions of the systems to which they are connected. Level instrument systems furnished shall be designed to ignore material buildup (coating) on the sensing element and thus only respond to actual changes in vessel material level. Where required by the manufacturer's design, level instrument systems shall be furnished complete with suitable radio frequency interference filters to eliminate the possible effect of transceivers being operated within the plant.

Electronic level monitoring systems shall impress low power, radio frequency voltages between sensing elements and ground. Both the capacitive and resistive components of the current flow caused by material level shall be measured and converted to produce suitable outputs for use by others. Continuous level systems shall output a 4 to 20 mA dc current signal which is isolated from ground and varies proportionally with material level. Point type system outputs shall be double-pole, double-throw (dpdt) output contacts. Level instrument systems shall be furnished to either be powered by a 115 volts ac, 60 hertz supply or powered by the dc supply used to power a typical 4 to 20 mA dc instrument signal current loop.

IP7014488

In applications requiring that the electronics unit be mounted remote from the probe, the Contractor shall furnish 50 feet of any special cable recommended by the manufacturer to connect sensing probes to separately mounted electronics enclosures. Special cable shall be defined as anything other than stranded 16 AWG, twisted, shielded cable or stranded 14 AWG unshielded cable. Cable furnished shall be of adequate mechanical strength to be pulled through conduit provided by others. If special cable is required, it shall be furnished with any required connectors installed on one end only, along with any required cable termination kits and fittings.

1B.33.6 Solenoid Valves. Solenoid valves shall be as manufactured by Automatic Switch Company. Valves shall be selected to incorporate body construction, trim materials, and internal arrangements suitable to the application and shall be acceptable to the Engineer. Solenoid enclosures shall be NEMA 4 unless otherwise specified. Junction box solenoids with screw terminal coils shall be provided when available. Solenoid coils shall be Class H high temperature construction and shall be suitable for continuous duty.

Manual operators shall be provided for solenoid valves used as pneumatic operator pilot valves.

The manufacturer's standard solenoid valves may be furnished for the following applications: dust collector pulse air, hydraulic fluids, and gauged solenoids within an enclosure.

1B.33.7 Pressure Gauges. Gauges for control air supply and signal pressure integral to the instrument shall be in accordance with the manufacturer's standards. All other gauges shall have a scale range selected such that the normal operating pressure is approximately mid scale (between one-third and two-thirds of full scale). Gauges shall have the service legend engraved on the dial or have a tag, engraved with the Engineer's ID number and the service legend, attached to the gauge. Static gauges shall have a 4-1/2 inch dial. Gauges shall have laminated safety glass. Gauges shall have stainless steel wetted parts, movements, and sockets unless the specific application requires other materials. All static gauges shall have 1/2 inch NPT bottom connections.

Static gauges shall be supplied with the following options to protect the gauge sensing element as stated:

> Pulsation dampener (Teledyne Republic Type 6011 or acceptable equal) to protect against process fluid oscillations of ±3 percent or more of the scale range.
>
> Isolation diaphragm to protect against corrosive or thick plugging type process fluids.

IP7014489

Overpressure and underpressure stops to protect against pressure surges outside the scale range limits.

Liquid fill to protect against excessive equipment or pipeline vibrations.

Static gauges shall be Perma-Cal Model 111TIB or Ashcroft "Duragauge" 1279.

Differential gauges for applications with static pressures up to 500 psig and ranges between 0 to 0.5 in. wc and 0 to 300 psid shall be Dwyer Instruments, Inc. Gauge bodies for water process fluids shall be brass.

Differential pressure gauges for applications with static pressures greater than 500 psig or where the above gauges are not suitable for the required differential pressure ranges, shall be ITT Barton 200 Series indicators with a Model 199 differential pressure cell. Gauges shall have 6 inch dials, 316 stainless steel bodies with a 1,000 or 3,000 psig safe working pressure, and ruptureproof stainless steel bellows.

1B.33.8 Thermometers. Thermometers for local mounting shall be minimum 4-1/2 inch dial, adjustable angle, bimetal or gas actuated thermometers manufactured by Ashcroft with 1/2 inch compression unions. Thermometers for panel mounting shall be minimum 4-1/2 inch dial, gas actuated thermometers manufactured by Ashcroft, Marsh, US Gauge, or Wechsler.

Gas actuated thermometers shall be furnished with stainless steel armored capillary tubing of the length required for the installation. Separate nameplates of engraved laminated phenolic shall be furnished and wired to the instrument to identify the service and tag number. Legends shall be as directed by the Engineer. Thermowells with lagging extensions where required shall be furnished for all thermometers and shall be as specified in this Section 1B under the article entitled Thermowells except that extension nipples shall not be furnished for thermometers.

1B.33.9 Temperature Detectors. Temperature detectors shall be thermocouples or resistance temperature detectors as required by the following paragraphs and the detailed specifications.

Temperature detectors equipped with thermowells shall be spring-loaded and shall be furnished as complete assemblies, each including a well, nipple, and weatherproof connection head. Thermowells shall be as specified in this Section 1B under the article entitled Thermowells.

Thermocouples shall be single element, stainless steel sheathed, with grounded measuring junctions. Thermocouples and extension wire shall meet the standard limits of error specified in ANSI MC96.1.

IP7014490

Temperature detectors for bearing temperatures shall be ISA Type E (chromel-constantan) thermocouples with Type EX extension wire.

Temperature detectors for metal temperatures other than bearings shall be ISA Type E (chromel-constantan) thermocouples with Type EX extension wire.

Thermocouples for fluid system temperature measurements shall be ISA Type E (chromel-constantan) with Type EX extension wire.

Resistance temperature detectors for fluid system temperature measurements shall be 100 ohm at 0° C platinum, metal sheathed, ceramic packed, ungrounded resistance temperature detectors.

Temperature detectors for motor winding temperatures shall be as specified in Section 1D.

Temperature detectors for transformer winding temperatures shall be as specified in the detailed specification sections.

1B.33.10 Thermowells. Fluid system temperature sensors shall be equipped with thermowells. Thermowells shall be one-piece solid bored Type 316 stainless steel of stepless tapered design. Maximum bored internal diameter shall be 0.387 inch.

The design of thermowells shall be certified acceptable for the maximum conditions of temperature, pressure, and fluid velocity by methods described in ASME Performance Test Code 19.3, Chapter 1, Paragraphs 8 through 19. The acceptability of each well shall be demonstrated to the Engineer. Thermowells shall be threaded and constructed to allow seal welding after installation.

Thread sizes shall be as follows:

Gas and air duct protection tubes	2 inch NPT
All others	3/4 inch NPT

Thermowell and protection tube insertion length shall be as determined by the manufacturer, unless otherwise specified in the Technical Requirements. Thermowell outside diameter at the beginning of the taper shall be approximately the same as the root diameter of the threads. Each thermowell shall be furnished with a stainless steel extension nipple of the length required to keep the thermocouple head at least 2 inches away from the insulation and lagging.

1B.33.11 Test Wells. Test wells shall meet all the criteria for material, design, construction, and certification specified for thermowells. Each test well shall be furnished with a stainless steel extension nipple and stainless steel screwed cap. Extension nipple length shall be as determined by the manufacturer, unless otherwise specified in the Technical Requirements.

IP7014491

1B.33.12 Protecting Tubes. Duct temperature sensors shall be equipped with protecting tubes. Protecting tubes shall be 1 inch standard weight pipe, 316 stainless steel unless specified otherwise in the technical specifications. Type 316 stainless steel protecting tube bushings shall be provided to make a 2 inch NPT connection to the duct wall allowing a variable insertion length into the duct by sliding the protecting tube through the bushing and then seal welding the protecting tube to the bushing. Protecting tube insertion lengths shall be as determined by the manufacturer and acceptable to the Engineer.

1B.33.13 Recorders. Recorders shall be chart type recording devices for the production of multicolored trace records which are legible and permanent. Thermal paper printers are not considered to be acceptable recording devices. Recorders furnished shall accept 120 VAC power supplies and shall be reliable, microprocessor based, programmable units of modular construction. If batteries are required to support programming memories, they shall be lithium type with a minimum 4 year life. Recorder chart writing systems shall employ long-life, disposable marking systems which are easily replaced. Recorders furnished shall, as a minimum, be capable of printing the chart scale and of producing red, green, and blue traces at a chart speed of 1 inch per hour. Recorders furnished shall also be capable of printing the date and time on the chart and of indicating signal input values in engineering units on a display visible from the recorder front. Strip chart recorders shall be furnished complete with a 1 year supply of "Z-fold" or "fan fold" type chart paper to simplify chart paper installation and to enhance record storage and review. Continuous writing pen type recorders shall be Johnson-Yokogawa Corp. of America Micro R 100 Series or acceptable equal.

Continuous writing pen type recorders are preferred. Multipoint type recorders which scan a number of inputs and produce a dot/trace type record shall ONLY be furnished in measurement applications which have received prior acceptance by the Engineer. An example of an acceptable multipoint recorder application would be the monitoring of numerous permanent or temporary boiler tube temperature thermocouples. If multipoint recorders are furnished, they shall be as manufactured by Johnson-Yokogawa Corp. of America or acceptable equal and be furnished in accordance with all applicable requirements specified for recorders in the preceding paragraph.

1B.33.14 Transmitters. Transmitters for the measurement of differential pressure, static pressure, or flow where applicable shall be microprocessor based Honeywell ST100 series SMART transmitters.

All wetted parts shall be stainless steel.

1B.33.15 Indicators. All indicators shall be Weschler Instruments Bargraph Meter Type BG252 with digital display or acceptable equal.

IP7014492

1B.33.16 Positioners. Positioners shall be electric-to-pneumatic Fisher Controls Type DUC5010, or acceptable equal. Positioners shall be designed for a control signal input range of 4-20 mA dc.

All positioners shall provide an output signal from 0 psig to the full supply air pressure required by the diaphragm. Electric-to-pneumatic positioners shall not be provided with bypasses; however, pneumatic-to-pneumatic positioners shall be provided with bypasses.

All positioners shall be equipped with filter regulator air supply sets mounted on the valve yokes. All positioners shall be capable of split range sequencing and direct or reverse action. Positioner action shall be field changeable without additional parts. Positioners shall be of the force balance type employing positive cam type feedback to provide accurate character feed final control positioning.

Where electric-to-pneumatic positioners are not available, a Rosemount Type 3311 electric-to-pneumatic transducer shall be provided with a pneumatic-to-pneumatic positioner.

1B.33.17 Position Transmitters. Position transmitters shall be Jordan Controls, Inc., or acceptable equal. Position transmitters shall produce an electrical dc signal in direct relationship to the actuator position. The output signal range shall be 4-20 mA dc, ±1.0 percent linear. The transmitter shall be 2 wire, isolated, and loop powered with a NEMA 4 enclosure.

1B.33.18 Purge Rotameters. Rotameters shall be Fischer & Porter Model 10A6131NA2B1A, Ametek Model 20-7050-3200, Moore Products Company Model 62VA, or acceptable equal.

1B.33.19 In-Line Flow Switches. Flow switches shall be Universal Flow Monitors, Inc., indicating flow switch with one 4 wire spdt switch. Housing material and internal moving parts shall be brass, bronze, or stainless steel as acceptable to the Engineer. Switch housing shall be NEMA 4 with wired-on phenolic ID tag.

1B.34 CONTROL POWER. Electrical power for control and instrumentation will be a nominal 120 volt, single-phase, 60 hertz, alternating current, or a nominal 125 volt direct current. The Contractor shall provide any devices required for proper operation and protection of the equipment during electrical power supply and ambient temperature fluctuations described in the following paragraphs.

All dc electrical control devices shall be designed for continuous operation on an ungrounded station battery at any voltage from 100 to 140 volts dc. Electrical devices served from this supply shall not impose any ground connections on it.

All ac electrical control devices shall, unless otherwise specified, be designed for continuous operation at any voltage from 102 to 132 volts alternating current. The dropout voltage shall

IP7014493

be less than 75 volts for relays and 90 volts for contactors and starters. Alternating current electrical control devices operating at nominal voltages other than 120 volts shall be designed for continuous operation over proportional voltage variations.

All devices shall be guaranteed to operate satisfactorily under voltage conditions specified in the above paragraphs and at a range of ambient temperatures from 50° C to -30° C outdoors and from 50° C to -10° C indoors.

1B.35 AUXILIARY POWER. Auxiliary equipment, such as motors, transformers, and rectifiers, requiring electrical power shall be designed to operate from one of the nominal electrical power sources as follows:

Volts	Phase	Hertz
6900	3	60
480	3	60
240	3	60
120	1	60
125	dc	-- (Emergency)

Alternating current motor voltage ratings with relation to horsepower shall be in accordance with the following:

Horsepower	Volts	Phase
Below 1/2	115	1
1/2 thru 249	460	3
250 and above	6600	3

Emergency motors shall be designed to operate from a nominal 125 volt dc supply. Direct current motors shall be capable of continuous operation at any terminal voltage from 100 to 140 volts dc for motors operating from a 125 volt dc supply.

Variations from motor design voltages specified must be acceptable to the Engineer.

1B.36 RACEWAY. Unless specified otherwise, all raceway interconnections between devices, panels, boxes, and fittings shall conform to ANSI C80.1 and UL 6. All conduit connections shall be of the threaded type, and all conduit, couplings, and fittings shall be hot-dip galvanized steel. The interior and exterior surfaces of all rigid conduit, couplings, and fittings shall have a continuous zinc coating with an overcoat of transparent enamel, lacquer or zinc chromate. Unless specified otherwise, all conduit shall be rigid steel or liquidtight flexible steel not exceeding 3 feet in length. All conduit entering outdoor enclosures shall enter through OZ-Gudney Type CHM raintight malleable iron hubs or threaded openings.

IP7014494

Unless otherwise specified, all liquidtight flexible conduit shall be plastic jacketed, galvanized steel, Anaconda Sealtight Type UA for general service and Type HC for high temperature service. Flexible conduit that could be exposed to damaging liquids or vapors shall have a jacket material suitable for the service. Flexible conduits shall not exceed 3 feet in length.

One exterior locknut and one interior locknut and one bushing shall be provided at the termination of each conduit not terminated in a hub. Locknuts shall be designed to securely bond the conduit to the box or cabinet when tightened. Locknuts shall be so constructed that they will not be loosened by vibration.

Insulated bushings with insulating inserts in metal housings shall be provided on all conduit not terminated in hubs and couplings. Grounding type bushings shall be provided on all conduit containing power circuits and on all conduit on equipment to be located in hazardous areas. Hazardous areas shall be as defined by the National Electrical Safety Code and the National Electrical Code. Standard bushings shall be galvanized.

Unless otherwise specified, all conduit fittings shall conform to the requirements of UL 514. All liquidtight flexible conduit fittings shall be galvanized steel, Appleton STN, STB, or acceptable equal and shall bear the UL label.

Conduit fittings used on outdoor equipment shall be of heavy cast construction and shall be sealed and gasketed.

All conduit shall be installed in exposed runs parallel or perpendicular to dominant surfaces with right angle turns made of symmetrical bends or fittings. A run of conduit shall not contain more than the equivalent of four 90 degree bends, including those immediately at outlets and fittings. Bends in conduit shall be made without reducing the internal diameter of the conduit.

All conduit runs shall be rigidly supported at intervals not exceeding 10 feet. Each conduit shall be supported within 1 foot of junction boxes and fittings.

Conduit shall be supported by means of conduit clamps and clamp-backs.

Moisture pockets shall be eliminated from conduits. If water cannot drain to the natural opening in the conduit system, a hole shall be drilled in the bottom of a pull box or conduit fitting provided in the low point of the conduit run.

Conduit shall be securely fastened to all boxes and cabinets. Threads on metallic conduit shall project through the wall of the box to allow the bushing to butt against the end of the conduit. The locknuts both inside and outside shall then be tightened sufficiently to bond the conduit securely to the box.

IP7014495

The raceway system provided for all interconnecting wiring shall be acceptable to the Engineer. Raceway systems utilizing gland seals will not be acceptable.

1B.37 ELECTRICAL ENCLOSURES. Unless indicated otherwise in these specifications, electrical enclosures, except junction boxes and pull boxes 4 inch trade size and smaller, shall be as follows:

Location	Enclosure Type
Indoor (Nonhazardous)	
Dry areas	NEMA 12.
Wet areas	NEMA 4.
Outdoor (Nonhazardous)	NEMA 4X (NEMA 3R, if 4X is not available).
Hazardous	NEMA 7.

The construction of electrical enclosures located in areas subject to conditions classified in the National Electrical Safety Code and the National Electrical Code as hazardous shall be of a type designated by NEMA as suitable for the environment in which they are located in addition to NEMA 4 or NEMA 12 as required.

Enclosures for areas classified as hazardous due to possible presence of ammonia, shall be Type NEMA 7.

Electrical enclosures, except those of cast metal, shall be constructed from steel plate reinforced as required to provide true surface and adequate support for devices mounted thereon. Thickness of the steel plate shall conform to the requirements of UL. Enclosures shall be of adequate strength to support mounted components during shipment and to support a concentrated load of 200 pounds on their top after erection.

Free-standing enclosures shall be 90 inches high, not more than 20 feet wide, and not more than 36 inches deep.

All junction boxes or pull boxes 4 inch trade size or smaller in any dimension shall be galvanized malleable iron or acceptable equal cast ferrous metal.

Junction boxes and pull boxes shall be in accordance with the requirements of NEC, Article 370, and shall be without knockouts.

IP7014496

Except as indicated otherwise in these specifications or on the drawings, all junction boxes and pull boxes larger than 4 inch trade size in all dimensions for use in indoor locations shall be sheet steel hot-dip galvanized after fabrication and those for use in outdoor or damp locations shall be galvanized cast ferrous metal, sheet steel hot-dip galvanized after fabrication, or sheet steel epoxy coated inside and outside after fabrication. The epoxy coating shall consist of a 3 mil coat of zinc rich epoxy primer with a minimum of 80 percent zinc in the dry film, followed by two finish coats of epoxy. Each finish coat shall be a minimum of 4 mils thick high gloss, two component polyamide.

1B.37.1 Electrical Enclosure Heating. Where electrical enclosure heating is specified, at least two space heaters, one adjustable thermostat, and one fuse and fuse block shall be provided completely wired in the enclosure. The space heaters, thermostat, and fuse block shall not interfere with normal cable entrance into the enclosure or with maintenance or replacement of devices within the enclosure. Normal use of space heaters shall not change or discolor any painted surface.

Space heater capacity shall be as required to maintain the enclosure internal temperature above the dew point under the specified service conditions.

Space heater voltage rating shall be 240 volts. Voltage applied to space heaters shall be 120 volts.

Space heaters shall be controlled by an adjustable thermostat, factory set to close on falling temperature at 80° F (on) and open on rising temperature at 95° F (off). The thermostat shall incorporate an indicating thermometer and set point temperature indication.

Any thermally controlled devices within the enclosure shall be temperature compensated for correct operation at 85° F and above.

Space heater leads shall be stranded copper cable with 600 volt insulation and shall include terminal connectors. Space heater sheaths shall be of a corrosion-resistant, nonoxidizing material and shall have a thickness not less than 0.025 inch.

1B.38 CLASSIFICATION IDENTIFICATION OF ELECTRICAL EQUIPMENT IN HAZARDOUS AREAS. All electrical equipment and devices located in areas subject to conditions classified in the National Electrical Safety Code and the National Electrical Code as hazardous shall be furnished with a nameplate stating the equipment classification. The nameplate data shall include the class, group, division, and operating temperature designations as applicable, and the NEMA type. Classification identification nameplates and attachment pins shall be corrosion-resistant metal.

1B.39 WIRING. In general, all devices furnished under these specifications and requiring electrical connections shall be designed for wiring into electrical enclosures with terminal blocks. Terminal blocks shall be furnished for conductors requiring connection to circuits

IP7014497

external to the specified equipment, for internal circuits crossing shipping splits, and where equipment parts replacement and maintenance will be facilitated.

Splices will not be permitted.

One spare normally open and one spare normally closed contact on each control switch and lockout relay shall be wired out to terminal blocks.

All wiring leaving an enclosure shall leave from terminal blocks and not from other devices in the enclosure.

Auxiliary equipment such as terminal blocks, auxiliary relays, or contactors shall be readily accessible. Auxiliary equipment shall be located in compartments, enclosures, or junction boxes in such arrangement that a serviceman will have direct access to the equipment without removal of barriers, cover plates, or wiring.

Terminal blocks for external connections shall be grouped in the instrument and control compartment for easy accessibility, unrestricted by interference from structural members and instruments. Sufficient space shall be provided on each side of each terminal block to allow an orderly arrangement of all leads to be terminated on the block.

Terminal blocks shall not be mounted in compartments containing cables or buses operating at voltages above 600 volts.

A shorting type terminal block shall be installed at an accessible location for each set of current transformers supplied with the equipment furnished under these specifications. The shorting terminal block shall be the one nearest the current transformers. No other shorting type terminal blocks are required unless specified otherwise. The shorting terminal blocks shall be furnished with white marking strips.

All electrical cables shall be conservatively selected for the electrical and environmental conditions of the installations and shall be of the best construction for the service where unusual service conditions are encountered. Proper temperature application cable shall be used throughout. Except where required to be otherwise to perform satisfactorily in the service, or unless otherwise specified in the detailed specifications, all electrical power and control conductors shall be Class B, stranded copper conductors, 14 AWG or larger.

Materials containing asbestos shall not be utilized in any of the electrical cable constructions. In addition, electrical cables which utilize mineral insulation (NEC Type MI) or polyvinyl chloride (PVC) insulation (NEC Types AWM, MTW, TA, TBS, THHN, THHW, THWN, TW, or THW) shall not be utilized. PVC shall not be utilized as a jacketing material on any of the cable constructions.

IP7014498

Control panel and cabinet wiring shall utilize stranded copper conductors with flame retardant cross-linked polyethylene or flame retardant ethylene-propylene rubber insulation rated 600 volts and shall meet the requirements of UL 44 for Types SIS and XHHW. The cables shall also meet the UL 44 VW-1 flame test and shall be Rockbestos Type SIS, VW-1; American Insulated Wire Type SIS, VW-1; Continental Wire & Cable Type SIS, VW-1; or acceptable equal.

General service power and control cables, integral to the equipment furnished but not internal wiring of control cabinets or panels, shall be rated for the maximum service voltage but not less than 600 volts. Single conductor cables shall have ethylene-propylene rubber insulation with a hypalon jacket, and multi-conductor cables shall have flame retardant cross-linked polyethylene conductor insulation and an overall hypalon jacket or acceptable equal insulation system, except NEC Type SF-2 silicone rubber insulated cable with braided glass jacket or NEC Type FEP fluorinated ethylene-propylene insulated cable shall be used where ambient conditions cause conductor operating temperatures to exceed the temperature ratings of the general service cable insulation specified.

All thermocouple cable shall utilize solid conductors with twisted and shielded pairs. Insulation shall be color-coded in accordance with the requirements of ANSI MC96.1. These requirements also apply to thermocouple extension wire which is furnished internal to Contractor-furnished equipment. The shield wire for each thermocouple furnished for external connections shall be insulated with a spaghetti sleeve and terminated on an ungrounded terminal. Thermocouple extension cables shall utilize conductors which are 20 AWG or larger.

All instrument cable shall utilize stranded copper conductors with twisted and shielded pairs or triads. These requirements also apply to instrument cable which is furnished internal to Contractor-furnished equipment. Shielding of these cables shall consist of aluminum-polyester tape and copper drain wire. Conductor insulation and overall jacketing material on these cables shall be teflon. The shield drain wire for each instrument cable shall be insulated with a spaghetti sleeve and terminated on an ungrounded terminal. Instrument cables shall utilize conductors which are 18 AWG or larger.

Thermocouple extension and instrument cables shall be Belden Wire and Cable plenum type or acceptable equal.

Control conductor terminal connectors shall be compression type connectors properly sized for the conductor and the terminal. The connectors shall be constructed of copper and shall be tin plated. The interior surface of the connector wire barrel shall be serrated, and the exterior surface of the connector wire barrel shall be furnished with crimp guides.

Noninsulated terminal connectors shall be used for conductors terminated on devices equipped with individual fitted covers, such as General Electric Type SB-1 control switches and General Electric Type HEA lockout relays. Preinsulated ring type terminal connectors

IP7014499

shall be used on all current and potential transformer circuits. All other terminal connectors for conductors smaller than 8 AWG shall be preinsulated ring type or preinsulated spade type.

Preinsulated terminal connectors shall include a vinyl sleeve, color coded to indicate conductor size. Preinsulated terminal connectors shall include a metallic support sleeve bonded to the vinyl insulating sleeve and designed to grip the conductor insulation.

Ring type connectors shall be manufactured by AMP, 3M, or acceptable equal. Spade type connectors shall be AMP slotted spring spade or 3M Scotchlok Series 61 snap spade terminal connectors.

Connectors for thermocouple extension wire shall be Omega Engineering Inc., Type SL, or acceptable equal.

Each terminal block, terminal, conductor, relay, breaker, fuse block, and other auxiliary device shall be permanently labeled to coincide with the identification indicated on the drawings. All terminals provided for termination of external circuits shall be identified by inscribing circuit designations acceptable to the Engineer on the terminal block marking strips with permanent black ink. All other wiring terminations shall be identified by printing on conductor identification sleeves. A conductor identification sleeve shall be provided on each end of each internal conductor. Each sleeve shall be marked with the opposite end destination identification described in Section 1C under WIRING DIAGRAMS. Conductor identification sleeves shall be polyvinyl chloride (PVC), not less than 1/2 inch long, and shall be as manufactured by W. H. Brady Company, Milwaukee, Wisconsin, or acceptable equal. Conductor identification shall be printed on the sleeve with permanent black ink acceptable to the Engineer. After inscription of the conductor identification, the sleeve shall be coated as required to prevent smudging. Conductor identification shall be permanent, unaffected by age, heat, solvents, or steam, and not easily dislodged. Adhesive labels are not acceptable.

The arrangement of connections on terminal blocks shall be acceptable to the Engineer.

All connections requiring disconnect plug and receptacle type devices shall be provided with factory terminated conductors on each plug and receptacle. Plugs and receptacles shall be factory wired into junction boxes containing terminal blocks for external connections. All conductors on the disconnect portion of plug-receptacle assemblies shall be in a common jacket.

All temporary wiring installed in the factory for equipment testing shall be removed prior to shipment of the equipment.

1B.40 EQUIPMENT SAFETY GROUNDING. All electrical equipment that is part of an integral shipping unit or assembly shall be furnished with bare copper grounding conductor

IP7014500

extending to a central ground connection lug. The lug shall be suitable for field connection to the station ground grid by others.

Isolated logic system or single-point ground connections required for proper operation of electronic equipment shall be insulated from the equipment safety ground. Such connections shall be extended, using insulated cable, to a single termination point suitable for field connection to the appropriate ground system by others.

Electrical equipment shall include all enclosures containing electrical connections or bare conductors with the exception of control devices, such as solenoids, pressure switches, and limit switches, unless such devices require grounding for proper operation.

Where a ground conductor is included with the power conductors of motor circuits, a compression type ground conductor termination shall be used and connected to the motor frame inside the motor terminal housing.

The conduit system shall not be considered to be a ground conductor except for itself. All conduits containing power circuits shall be provided with grounding type bushings and shall be wired together inside enclosures and connected internally to the enclosure grounding lug or grounding bus with bare copper conductor. Grounding bushings 1-1/2 inches and smaller shall be grounded with 8 AWG bare copper ground conductor. The ground conductors to larger bushings shall be sized in accordance with the NEC but shall not be smaller than 8 AWG.

Unless otherwise specified, ground conductors shall be uninsulated strand Class B standard round soft drawn uncoated copper as defined in ICEA S-19-81, and all clamps, conductors, bolts, washers, nuts, and other hardware used with the grounding system shall be copper.

1B.41 PIN AND SOCKET CONNECTORS. Pin and socket connectors shall have threaded couplings and crimp type contacts and shall meet Military Specification MIL-C-5015 except for pin and socket plating. Pin and socket plating shall be a minimum of 0.000050 inch of gold over 0.000050 inch of nickel. Connectors shall be manufactured by Amphenol, ITT Cannon, Pyle-National, or acceptable equal. If the Contractor is unable to furnish connectors as specified, he shall submit a sample of the connector he proposes to furnish accompanied by complete manufacturer's specification data with the request for Engineer acceptance.

1B.42 TERMINATION OF 600 VOLT POWER CABLE. The capacities of conduit entrances, terminal enclosures, and conductor terminals for 600 volt power cable terminations in equipment furnished under these specifications shall be as required to accommodate copper or aluminum phase conductors and copper ground conductors which are sized in accordance with the requirements of this article.

1B.42.1 Conduit Entrances and Terminal Enclosures. Capacities of conduit entrances and terminal enclosures for phase conductors shall be as required for conductors sized in

IP7014501

accordance with the requirements of the ICEA-NEMA standard for ampacities of cables in open-top cable trays, ICEA Pub. No. P-54-440 (Second Edition) and NEMA Pub. No. WC51-1975, and shall be based on installation in open-top cable tray to a 2.0 inch calculated depth of cables. The following tables in the previously referenced standard shall be used for the phase conductor materials and sizes, and cable constructions listed:

Table 3	Copper conductor Sizes 12 AWG through 2 AWG in three conductor cable.
Table 4	Copper conductor Sizes 1/0 AWG through 1,000 mcm in single conductor cable.
Table 20	Aluminum conductor Sizes 1/0 AWG through 1,000 mcm in single conductor cable.

Each power circuit will include a copper ground conductor or conductors having a total size coordinated with the full load current requirement of the equipment in accordance with the National Electrical Code.

1B.42.2 Conductor Terminals. Terminals for conductors 10 AWG and smaller shall be Marathon 1500 Series or acceptable equal. Terminals for conductors 8 AWG through 4/0 AWG shall be Curtis Industries, Inc., Type L, O, or S, or acceptable equal. Terminals for conductors larger than 4/0 AWG shall be tinned copper bar bus drilled and tapped with NEMA sized and spaced holes.

The sizes and types of conductor terminals for 600 volt power cable terminations in equipment shall be coordinated with the conductor and terminal connector data which will be furnished by the Engineer. The Contractor shall obtain terminal connector and conductor data from the Engineer before installing the conductor terminals.

1B.43 TERMINATION OF CABLES RATED ABOVE 600 VOLTS. The capacities of conduit entrances, terminal enclosures, and conductor terminals for cables rated above 600 volts shall be as required by the detailed specifications for the connected equipment.

1B.44 TERMINAL BLOCKS. Terminal blocks shall be furnished with white marking strips and, where permitted by the safety codes and standards, shall be without covers. Spare unused terminals shall be furnished on each terminal block for circuit modifications and for termination of all conductors in a multi-conductor control cable. Not less than two spare unused terminals shall be furnished for every 10 terminals used.

Fuses may be mounted on terminal blocks. Neither step type terminal blocks nor angle mounting of terminal blocks will be acceptable.

IP7014502

All terminal blocks, except internal terminal blocks in factory prewired electronic systems cabinets and terminal blocks for thermocouple extension wire, shall be rated 600 volts minimum and shall have strap screw terminals. Terminal blocks for 10 AWG and smaller 600 volt insulated conductors shall be Marathon 1500 Series or acceptable equal. Terminal blocks for thermocouple extension wire shall be Buchanan Medium Duty with thermocouple contacts, or Marathon 200 Series with Omega Engineering Inc., Type TL terminal lugs for terminal blocks, or acceptable equal. Terminal blocks shall be appropriately sized for larger wire size or higher voltage insulated incoming conductors as necessary.

1B.45 FUSE BLOCKS. Where fuse blocks rated 30 amperes, 250 volts are required, they shall be modular type with bakelite frame and reinforced retaining clips. Blocks shall be Class H, 2-pole, Model No. H25030-2SR screw terminal fuse blocks as manufactured by Underwriters Safety Device Co. or acceptable equal. Blocks for other current and voltage ratings shall be similar in construction and by the same manufacturer.

1B.46 FUSES. Where slow blow fuses are required for protection of equipment, they shall be Bussmann Type MDL, Gould Shawmut Type GDL, or acceptable equal, with ampere ratings of 1/4, 1/2, 1, or 2. Where fast acting fuses are required for protection of equipment, they shall be Bussmann Type NON, Gould Shawmut Type OT, or acceptable equal, with ampere ratings of 1, 3, 6, 10, 15, 20, or 30. Where extremely fast acting fuses are required for protection of equipment, they shall be Bussmann Type KAB or acceptable equal, with ampere ratings of 1, 3, 6, 10, 15, 20, or 30.

1B.47 ELECTRICAL ACCESSORY DEVICES. Electrical accessory devices shall be furnished in accordance with the requirements stated herein unless otherwise specified in the detailed specification sections.

1B.47.1 Electrical Instruments. All indicating instruments for electrical quantities shall be of the switchboard type with 1 percent accuracy classification, shall be designed for flush mounting, and shall be approximately 4 inches square. All instrument scales shall consist of black markings on a white background. Any instrument which is checked in the field and found to be inaccurate in excess of 2 percent will be returned to the Contractor for calibration or replacement without cost to IPSC. All ac instruments shall be designed for operation through 5 ampere current transformer secondaries and 120 volt potential transformer secondaries. Instruments shall be Yokogawa Corporation (General Electric) Type AB-40, Weschler Electric Corporation (Westinghouse) Type 241, or acceptable equal.

1B.47.2 Control Relays. General service auxiliary relays (industrial grade) shall be Allen-Bradley Bulletin 700 Type P or acceptable equal. Where current carrying requirements exceed the capacity of the general service auxiliary relays, auxiliary relays shall be Allen-Bradley Bulletin 700 Type PK, General Electric Type HFA or HGA, Westinghouse Type MG-6, or acceptable equal.

IP7014503

Timing relays for general service shall be Allen-Bradley Bulletin 700 Type PT or acceptable equal, where the delay period is 1 minute or less. Timing relays for critical service shall be Agastat Series 7000 or acceptable equal.

1B.47.3 Control Switches. Control switches shall be 600 volt, 20 ampere, multistage, rotary type. Switches shall have black, fixed, modern, pistol grip type handles and engraved black plastic escutcheon plates with targets. Switches shall be General Electric Type SB-1, General Electric Type SB-10, Electro Switch Type 24, Electro Switch Type W, or acceptable equal. All General Electric switches shall be furnished with large covers.

1B.47.4 Push Buttons and Selector Switches. Push buttons and selector switches shall be heavy-duty oiltight, Honeywell Micro Switch Type PT, Square D Class 9001 Type K, or acceptable equal.

1B.47.5 Toggle Switches. Toggle switches shall be Honeywell Micro Switch Type TL or acceptable equal.

1B.47.6 Indicating Lights. Status indicating lights shall be either Micro Switch Type PTW, with Type 387 lamps, plastic lenses, and appropriately sized resistors; General Electric Type ET-16, with incandescent screw connectors, plastic lenses, and appropriately sized resistors; or acceptable equal.

Engraved indicating lights shall be Honeywell Micro Switch Series 2 with Type 387 lamps or acceptable equal.

Indicating light lens colors shall be coordinated with indicated conditions as specified in the following table. Indicating lights shall be energized when the condition exists and shall be de-energized when the condition does not exist:

Lens Color	Condition
Red	Equipment energized, such as motor running, valve open, or breaker closed.
Green	Equipment de-energized, such as motor stopped, valve closed, or breaker open.
White	Equipment abnormality, such as motor trip or breaker trip.
Amber or yellow	Equipment start permissive.

IP7014504

Indicating lights for local control stations shall be heavy-duty oiltight, Square D Class 9001 Type K, Allen-Bradley Bulletin 800T, or acceptable equal.

1B.47.7 Alarm Contacts. Alarm contacts for remote annunciation shall be suitable for operation at 125 volts dc. All contacts shall be rated at least 0.5 ampere make or break, at 125 volts dc.

Alarm contacts shall be normally closed contacts which open to alarm condition.

1B.48 MOLDED CASE CIRCUIT BREAKERS. Molded case circuit breakers used in equipment furnished under these specifications shall be as listed in the following tables:

AC SERVICE

				Interrupting Capacity (NEMA)			
				AC		DC	
Poles	Service Volts ac	Frame Rating amperes	Trip Range amperes	Symmetrical Amperes	Volts	Amperes	Volts
1	120	100	15 - 100	10,000	120	5,000	125
2	240	100	15 - 100	10,000	240	5,000	250
2	480	100	15 - 100	14,000	480	10,000	250
3	240	100	15 - 100	10,000	240	*	*
3	480	100	15 - 100	14,000	480	*	*
2	480	225		18,000	480	10,000	250
3	480	225		18,000	480	*	*

*The construction of all 3-pole circuit breakers furnished under these specifications shall be equivalent to the single-pole and 2-pole circuit breakers specified. This shall include heavy-duty construction and spacing between poles as required for dc rated circuit breakers.

IP7014505

DC SERVICE

Poles	Service Volts dc	Frame Rating amperes	Trip Range amperes	Interrupting Capacity (NEMA) AC Symmetrical Amperes	AC Volts	DC Amperes	DC Volts
2	125	100	15 - 100	10,000	120	5,000	125

1B.49 WEATHERPROOFING. All outdoor electrical equipment and all appurtenances shall be designed for satisfactory operation during 60 mile per hour wind and driving rain. All exposed unpainted parts shall be fabricated of corrosion-resisting metal. All ventilating openings shall be louvered on outdoor electrical equipment to prevent entrance of rain under weather conditions described above. All ventilating openings on outdoor electrical equipment shall be equipped with fine mesh filters and stainless steel bug screens.

1B.50 FACTORY PREWIRED ELECTRONIC SYSTEMS CABINETS. Internal wiring in factory prewired electronic systems cabinets may be installed according to the Contractor's standard as to wire size, insulation, and method of termination on internal equipment except that insulation for all wiring (including circuit board wiring, back plane wiring, and power supply wiring) shall meet the VW-1 (vertical wire) flame test requirements of UL 44. Interconnecting cables between devices shall meet the flame test requirements of IEEE Standard 383 (ANSI N41.10) using a gas burner flame source. The individual conductors of the interconnecting cables shall meet the flame resisting test requirements of ICEA S-19-81, Paragraph 6.19.6. Identification of conductors may be done by insulation color coding identified on drawings or by printed wiring lists. Terminal blocks for connection of external circuits into factory prewired electronic systems cabinets shall meet all the requirements of the article TERMINAL BLOCKS in this section.

1B.51 SOLID-STATE LOGIC SYSTEMS. All electrical equipment containing solid-state logic systems shall be tested in accordance with the manufacturer's standard tests for a minimum of 120 hours under power prior to shipment from the factory. The components to be tested shall include the electronic devices, power supplies, input-output devices, operator interface devices, and interconnecting cables provided with the system. The system shall be tested as a complete assembly. Testing of individual components or modules will not be acceptable as system tests.

A description of the manufacturer's standard factory test procedure shall be provided in the proposal.

IP7014506

The system test shall include a means of confirming the logic or mathematical design response of the system by simulating changes in system input. The test shall repeatedly cycle the system through all operations it will be expected to perform in service with loads on the various components equivalent to those which will be experienced in actual service.

The test shall include adjustment of power source voltages to the high and low limits. The test shall verify correct operation of the system at both high and low power source voltage limits. The system shall be tested and verified capable of providing surge withstand capability in accordance with the requirements of ANSI C37.90.1.

The test shall be performed with the solid-state logic system exposed to ambient temperature appropriate to the service for which the associated electrical equipment is designed.

Written test results shall be provided indicating when test occurred, component failures, voltage levels, and additional information as required to document the results of the testing.

1B.52 MOTOR CONTROL. The Typical Schematics for Combination Starters following this section indicate the wiring of the ac motor starters which will be furnished by IPSC for 460 volt, 3-phase motors rated 100 horsepower and smaller.

The Contractor shall assure that the control devices and the control wiring, including terminal designations, are compatible with the appropriate starter control voltages and wiring as indicated.

1B.52.1 Contractor-Furnished AC Motor Starters. The ac motor starters furnished with the equipment shall provide wiring in accordance with the Typical Schematics for Combination Starters following this section and in addition shall conform to the requirements which follow.

Motor starters for 480 volt ac service shall include 480 volt, 3-phase, 60 hertz contactors with manual reset thermal overload relays, 120 volt ac operating coils, and 480 to 120 volt dry type control transformers complete with one secondary lead fused and the other secondary lead grounded.

Single-speed starters shall be furnished with three overload relays. Two-speed starters shall be furnished with six overload relays.

Two-speed starters and reversing starters, where required, shall be mechanically and electrically interlocked so that only one set of contacts can be closed at any one time.

Auxiliary contacts shall be mechanically operated by the starter contactor. The quantity of contacts shall be as required, but not less than the quantity indicated on the Typical Schematics for Combination Starters. Terminal blocks shall be furnished as indicated on the Typical Schematics for Combination Starters.

IP7014507

Control transformers shall have 60 hertz ac ratings permitting operation at a primary voltage from 440 to 480 volts at a voltage ratio of 4:1. Assuming 440 volts on the primary terminals, each control transformer shall maintain a potential of not less than 105 volts at its secondary terminals during starter coil inrush, while simultaneously serving an additional load of 100 volt-amperes at 50 percent power factor.

Starters for 120 volt or 240 volt ac service shall be similar to 480 volt starters except control transformers will not be required.

1B.52.2 Contractor-Furnished DC Motor Starters. Magnetic starters for dc service shall be suitable for starting 125 volt dc motors.

Each dc starter shall be complete with 125 volt dc operating coils, contactors, starting resistors as required, six electrically separate auxiliary relay contacts (three normally open and three normally closed), one overload relay, and a 36 point terminal block. All auxiliary and overload contacts shall be wired to terminal blocks for external use.

IP7014508

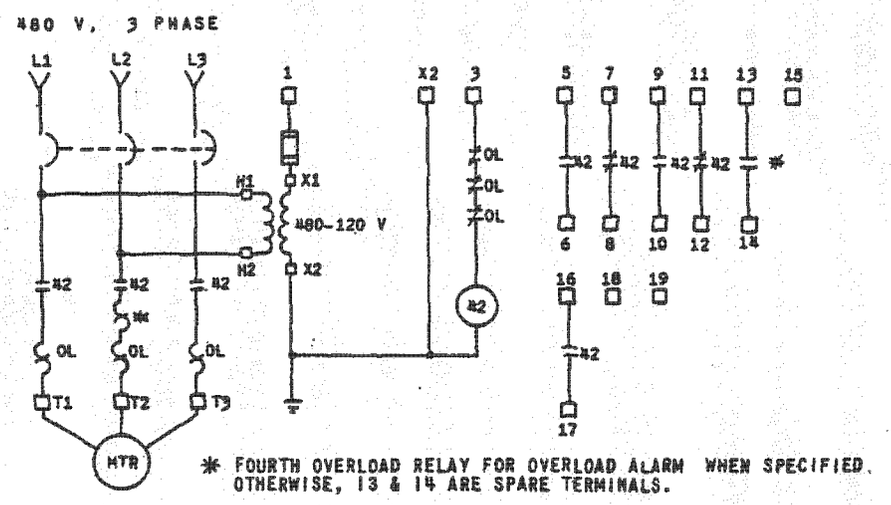

* FOURTH OVERLOAD RELAY FOR OVERLOAD ALARM WHEN SPECIFIED. OTHERWISE, 13 & 14 ARE SPARE TERMINALS.

WIRING DIAGRAM COMBINATION FULL VOLTAGE NON-REVERSING STARTER
NOTE: THIS DOES NOT APPLY TO SIZE 5 AND LARGER

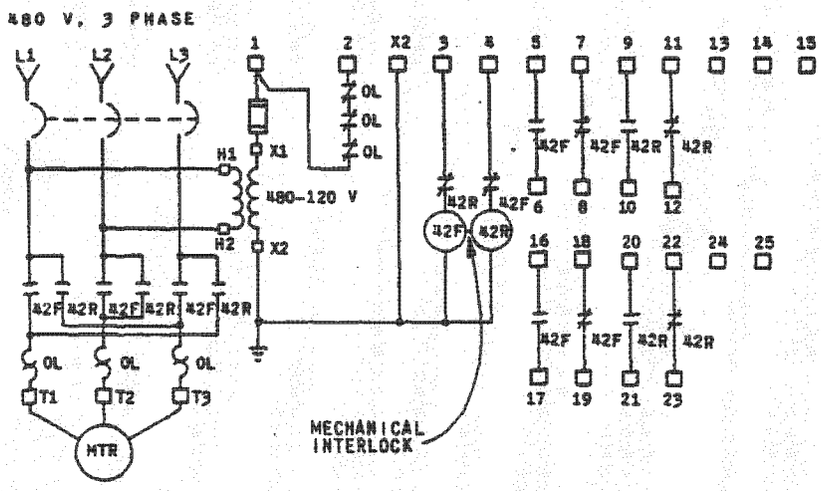

WIRING DIAGRAM COMBINATION FULL VOLTAGE REVERSING STARTER
NOTE: THIS DOES NOT APPLY TO SIZE 5 AND LARGER

P-EL-056-1

BLACK & VEATCH CONSULTING ENGINEERS		PROJECT _____ SPEC _____
	TYPICAL SCHEMATICS FOR COMBINATION STARTERS	

IP7014509

Section 1C - IPSCING DATA

1C.1 GENERAL. This section stipulates the requirements for IPSCing data which the Contractor shall submit to the IPSC for design information and review. Compliance with the specified schedule for IPSCing data submittal is vital to the scheduled progress and completion of the project.

All IPSCing data shall be identified with the equipment or structure it represents by use of the nomenclature established by the purchase order documents. Equipment drawings shall have the IPSC's equipment name and number clearly displayed. Material drawings shall have the IPSC's structure name and structure number (when applicable) clearly displayed.

1C.1.1 Document Index. A document index listing all drawings and data to be submitted shall be included with the initial submittal. The document index shall be resubmitted as required to indicate revisions to the list. The list shall include the document number and title, if known, or the general document category, e.g., wiring diagrams for each item of equipment.

1C.2 CORRESPONDENCE. Correspondence, drawings, and data shall be addressed to the IPSC and the Owner as follows:

Original to IPSC:

Intermountain Power Project
850 West Brush Wellman Road
Delta, Utah 84624

Attention: Jon Christensen

Copy to IPSC:

Intermountain Power Project
850 West Brush Wellman Road
Delta, Utah 84624

Attention: (Later)

Letters of transmittal shall accompany all submittals of IPSCing data and shall include a list of the data included in the transmittal. Lists shall include manufacturer's drawing numbers identified with the corresponding project equipment or structure nomenclature as applicable. All correspondence shall be identified with the project name, specification number, IPSC's project number, and manufacturer's order number.

IP7014510