DRG. No. R277/A0/1341 SHEET No. - OF - SHEETS

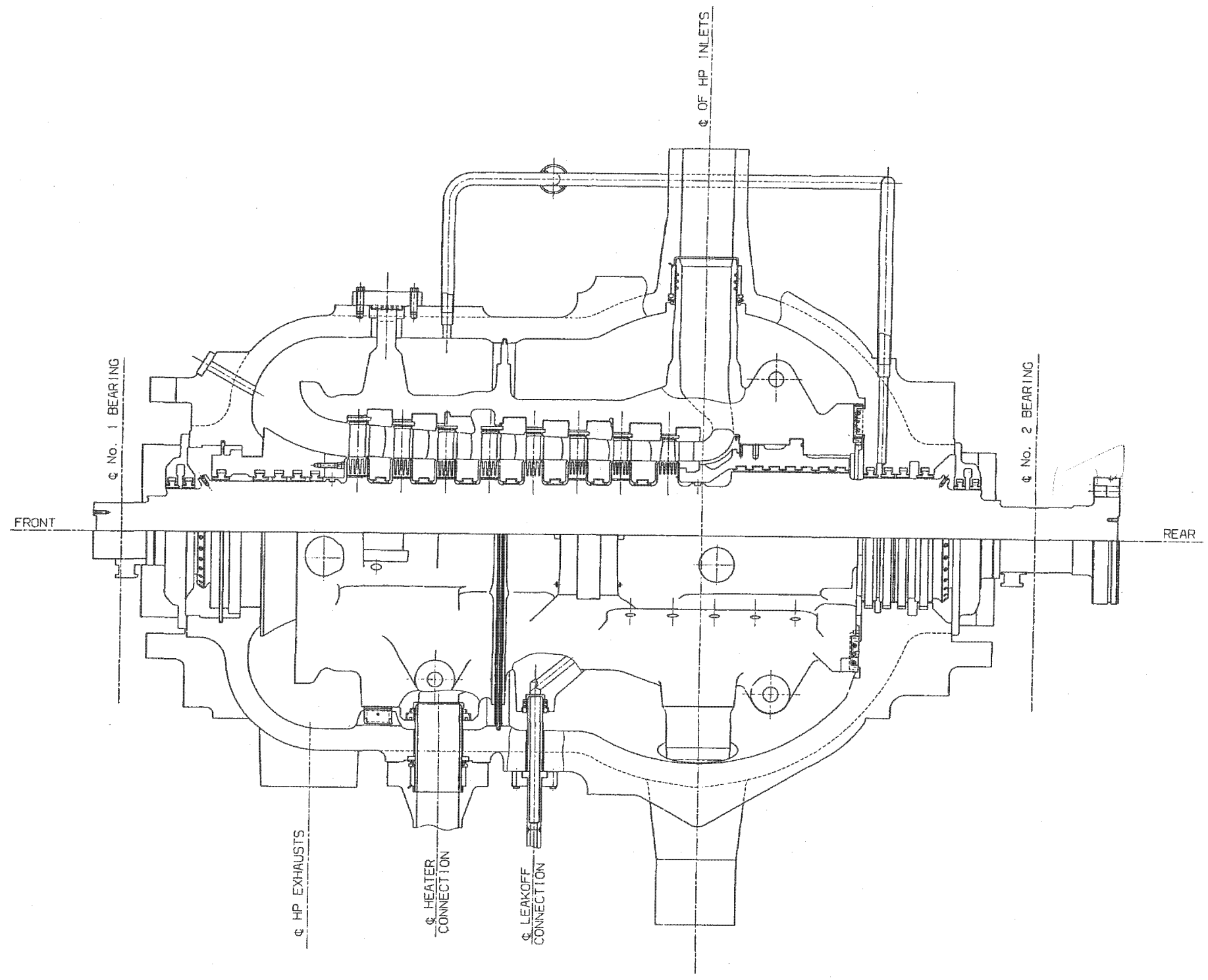

TITLE
HP MODULE GENERAL ARRANGEMENT

IP7011428

ORG. No. R202/A0/5396 SHEET No. 5 OF 6 SHEETS

DIMENSIONS IN INCHES UNLESS OTHERWISE STATED

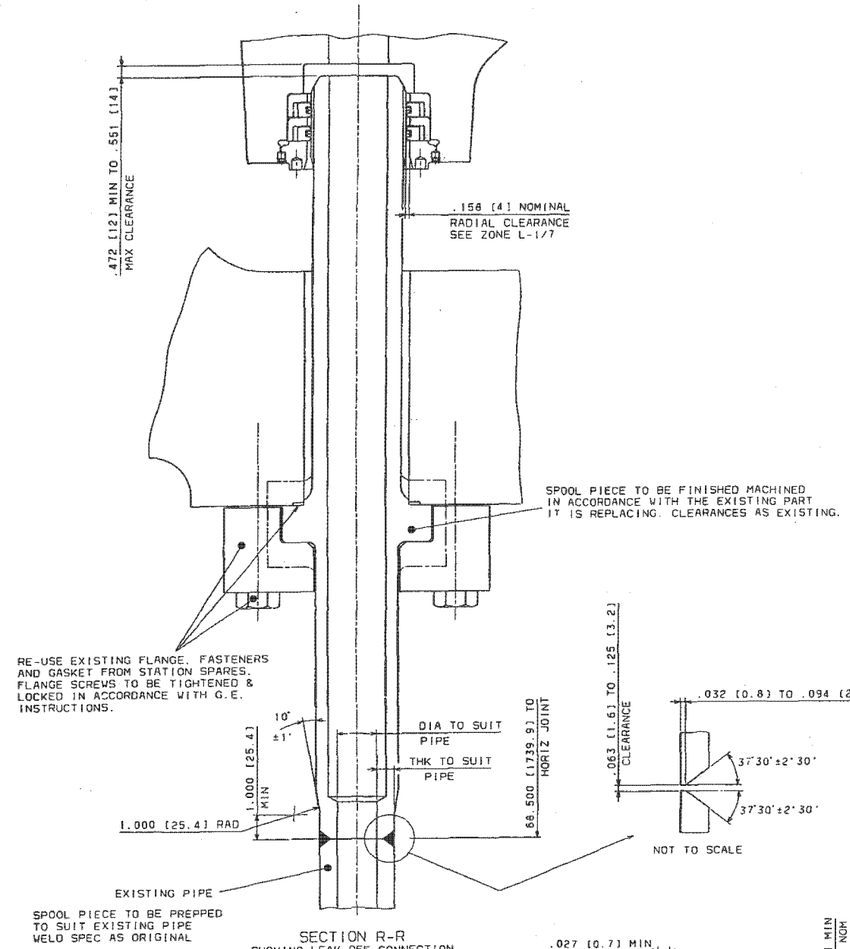

SECTION R-R
SHOWING LEAK OFF CONNECTION
ZONE L-8

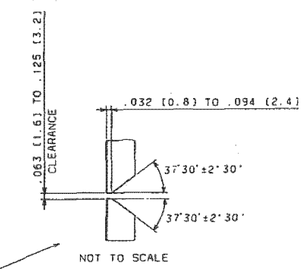

NOT TO SCALE

CLEARANCES ARE TO BE MEASURED AT THE FRONT, REAR, LHS & RHS OF LEAK OFF CONNECTION. THE ACCEPTABLE MINIMUM SIDE CLEARANCES ARE DEPENDANT UPON THE ACHIEVED CLEARANCES IN THE AXIAL DIRECTION. (I.E. FRONT AND REAR). DETERMINED FROM THE TABLE BELOW. (LINEAR INTERPOLATION IS PERMITTED)

LEAK OFF CONNECTION	
ACHIEVED AXIAL CLEARANCE (MINIMUM OF FRONT AND REAR)	MINIMUM LHS OR RHS CLEARANCE
.157 [4]	.028 [0.7]
.122 [3.11]	.031 [0.8]
.067 [1.69]	.063 [1.6]
.048 [1.23]	.094 [2.4]
.039 [0.98]	.126 [3.2]
.035 [0.9]	.157 [4]

CLEARANCE TABLE FOR HP LEAK OFF CONNECTION

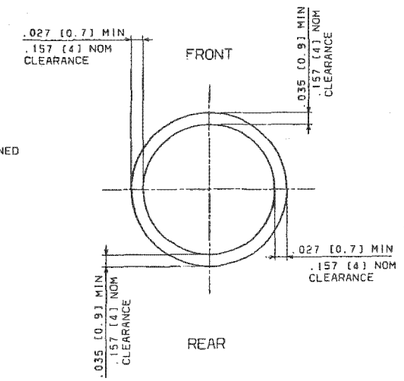

DIAGRAMATIC VIEW SHOWING DISPOSITION OF CLEARANCE TOLERANCE FOR LEAK OFF CONNECTION
NOT TO SCALE

CLEARANCES ARE TO BE MEASURED AT THE FRONT, REAR, LHS & RHS OF HEATER CONNECTION. THE ACCEPTABLE MINIMUM SIDE CLEARANCES ARE DEPENDANT UPON THE ACHIEVED CLEARANCES IN THE AXIAL DIRECTION. (I.E. FRONT AND REAR). DETERMINED FROM THE TABLE BELOW. (LINEAR INTERPOLATION IS PERMITTED)

HEATER CONNECTION	
ACHIEVED AXIAL CLEARANCE (MINIMUM OF FRONT AND REAR)	MINIMUM LHS OR RHS CLEARANCE
.239 [6.07]	.039 [1]
.179 [4.55]	.079 [2]
.150 [3.82]	.118 [3]
.132 [3.36]	.157 [4]
.122 [3.09]	.197 [5]
.118 [3]	.236 [6]

CLEARANCE TABLE FOR HP HEATER CONNECTION

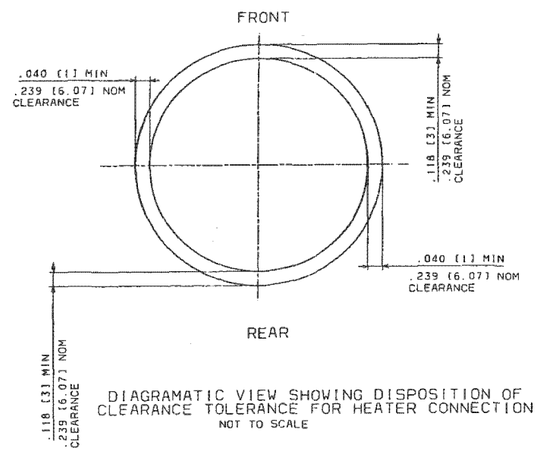

DIAGRAMATIC VIEW SHOWING DISPOSITION OF CLEARANCE TOLERANCE FOR HEATER CONNECTION
NOT TO SCALE

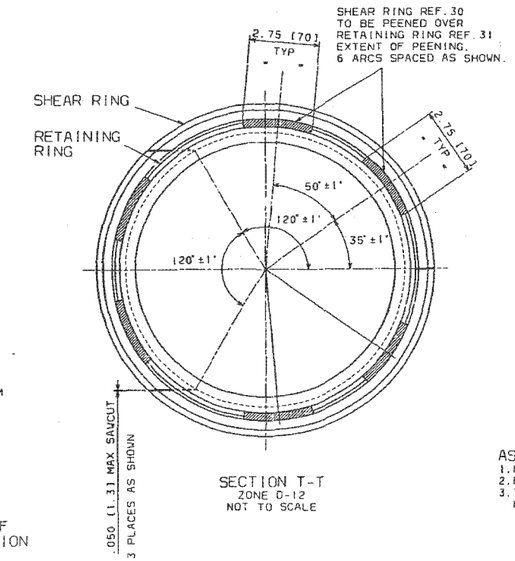

SECTION T-T
ZONE D-12
NOT TO SCALE

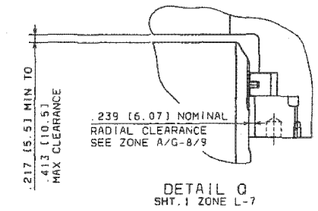

DETAIL Q
SHT.1 ZONE L-7

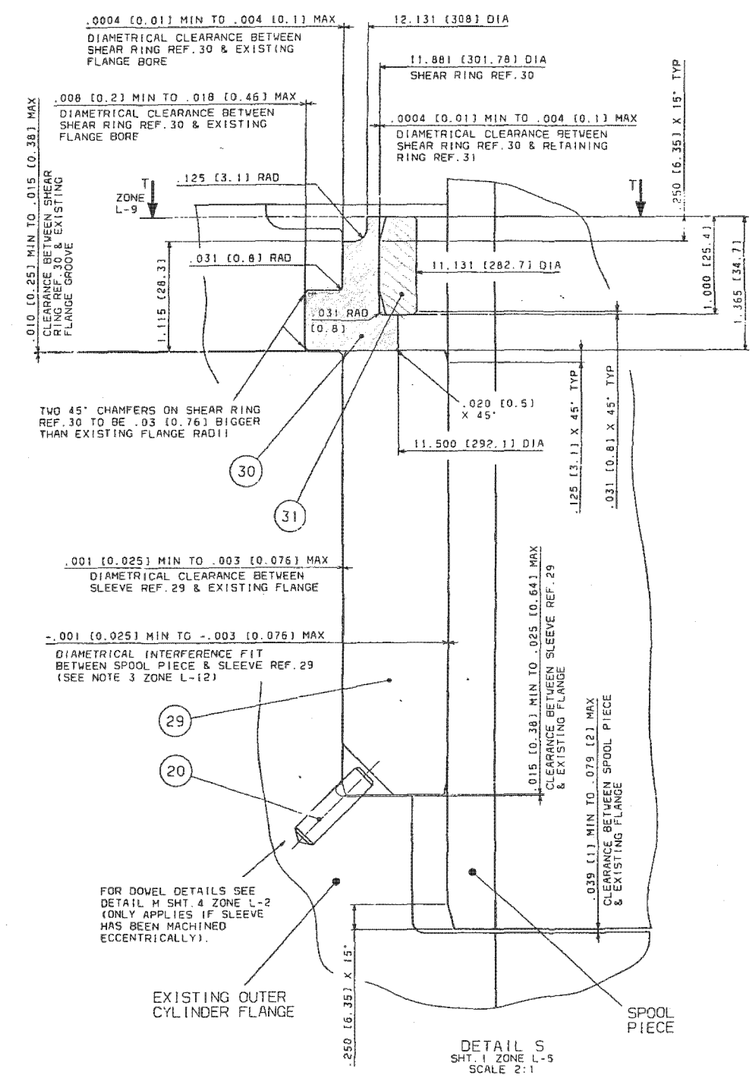

DETAIL S
SHT.1 ZONE L-5
SCALE 2:1

ASSEMBLY SEQUENCE OF HEATER CONNECTION
1. FIT SLEEVE REF.29 INTO FLANGE
2. FIT SHEAR RING REF.30 ANG RETAINING RING REF.31
3. TO ACHIEVE INTERFERENCE FIT AS STATED AT ZONE F-12 HEAT UP FLANGE AND SLEEVE SUB ASSEMBLY TO APPROX. 100°C AND FIT SPOOL PIECE.

TITLE
HP CYLINDER INTERFACE

IP7011429

DRG No. R202/A0/5396 SHEET No. 4 OF 5 SHEETS

DIMENSIONS IN INCHES UNLESS OTHERWISE STATED

NOTE:-
IF NECESSARY DIMENSIONS MARKED THUS *CAN BE MACHINED TO A MAX OF .27 [6.8] ECCENTRIC TO THEIR BORES.
THIS ECCENTRICITY WILL BE REQUIRED IF DURING SITE INVESTIGATION THE MIN CLEARANCE BETWEEN THE LINER AND THE NOZZLE BOX CANNOT BE ACHIEVED.
SEE DIAGRAMATIC VIEW OF CLEARANCES ZONE K-10

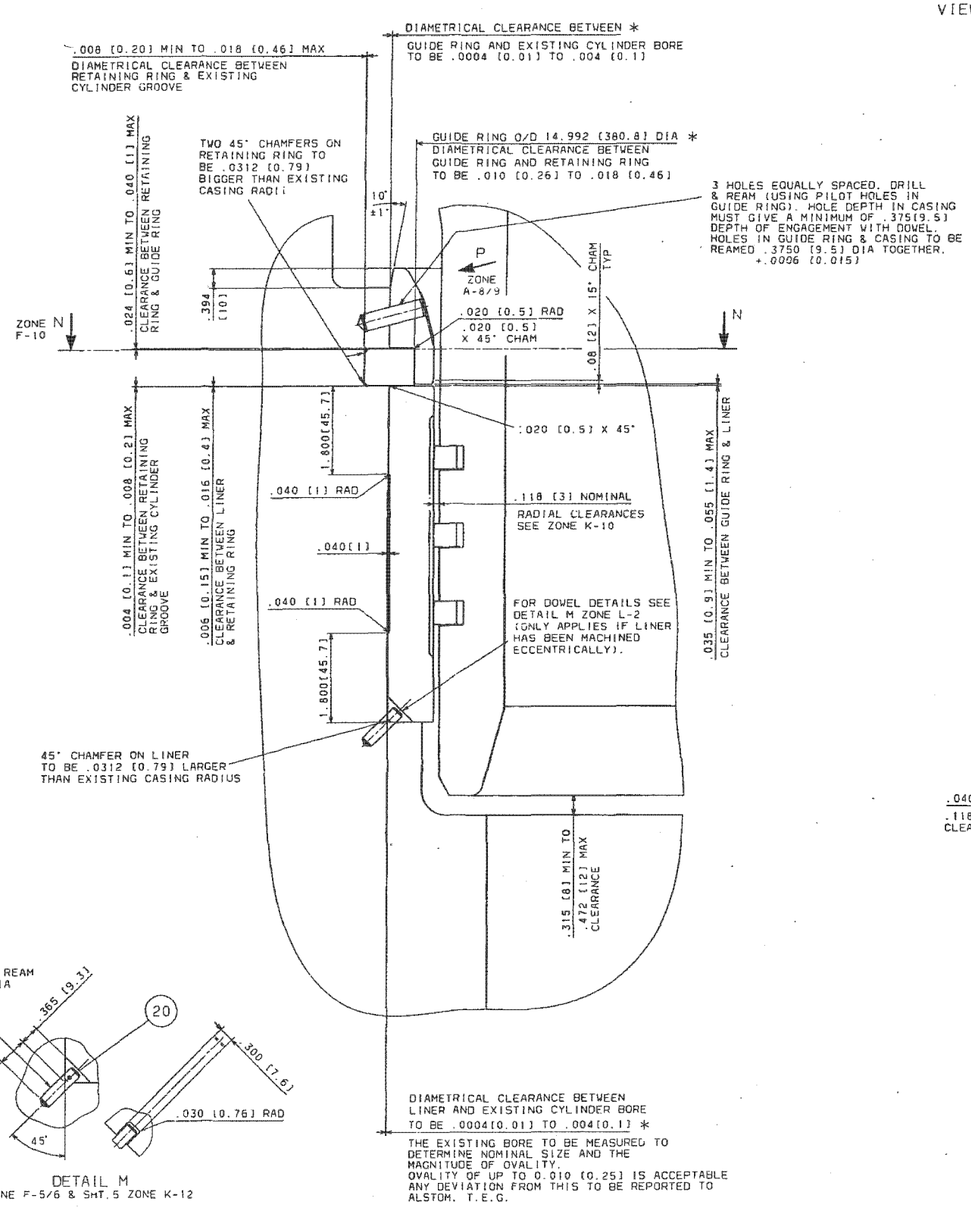

PART SECTION L-L
SHT 1 ZONE L-10

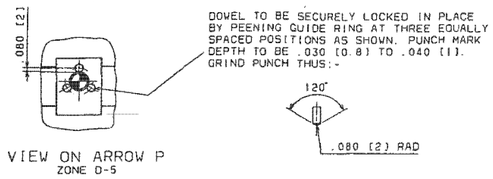

VIEW ON ARROW P
ZONE D-5

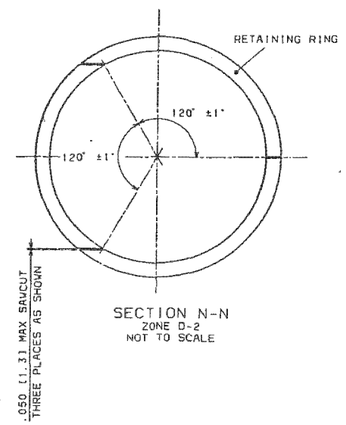

SECTION N-N
ZONE D-2
NOT TO SCALE

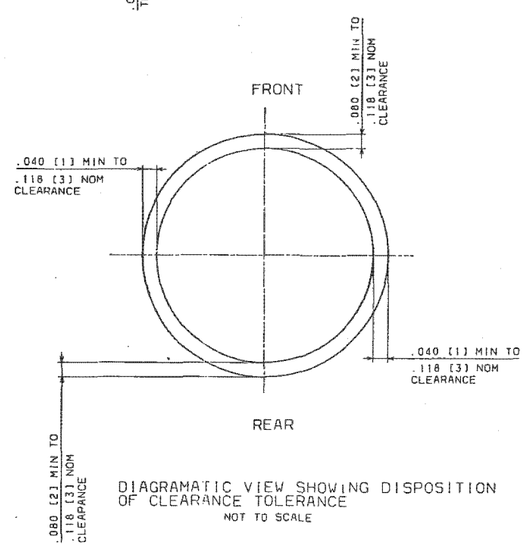

DIAGRAMATIC VIEW SHOWING DISPOSITION OF CLEARANCE TOLERANCE
NOT TO SCALE

CLEARANCES ARE TO BE MEASURED AT THE FRONT, REAR, LHS & RHS OF EACH INLET THE ACCEPTABLE MINIMUM SIDE CLEARANCES ARE DEPENDANT UPON THE ACHIEVED CLEARANCES IN THE AXIAL DIRECTION. (I.E. FRONT AND REAR), DETERMINED FROM THE TABLE BELOW. (LINEAR INTERPOLATION IS PERMITTED)

INLETS	
ACHIEVED AXIAL CLEARANCE (MINIMUM OF FRONT AND REAR)	MINIMUM LHS OR RHS CLEARANCE
.118 [3]	.039 [1]
.108 [2.75]	.040 [1.01]
.098 [2.5]	.053 [1.34]
.089 [2.25]	.071 [1.8]
.079 [2]	.118 [3]

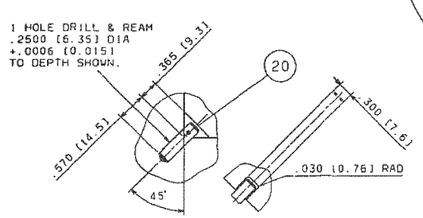

DETAIL M
ZONE F-5/6 & SHT.5 ZONE K-12

NOTE:-
THIS MACHINING IS REQUIRED ONLY IF LINER HAS BEEN MACHINED ECCENTRICALLY.

TITLE
HP CYLINDER INTERFACE

A

IP7011430

DRG. NO. R202/A0/5396 SHEET No. 3 OF 5 SHEETS

DIMENSIONS IN INCHES UNLESS OTHERWISE STATED

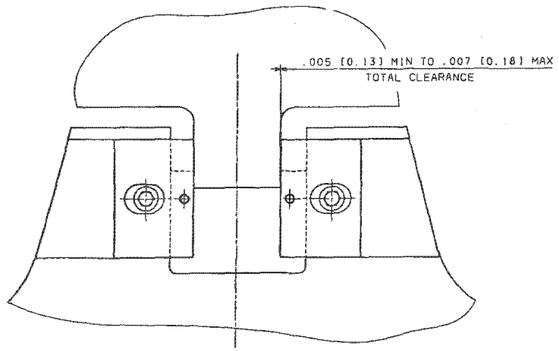

DETAIL F
SHT. 1 ZONE B-8

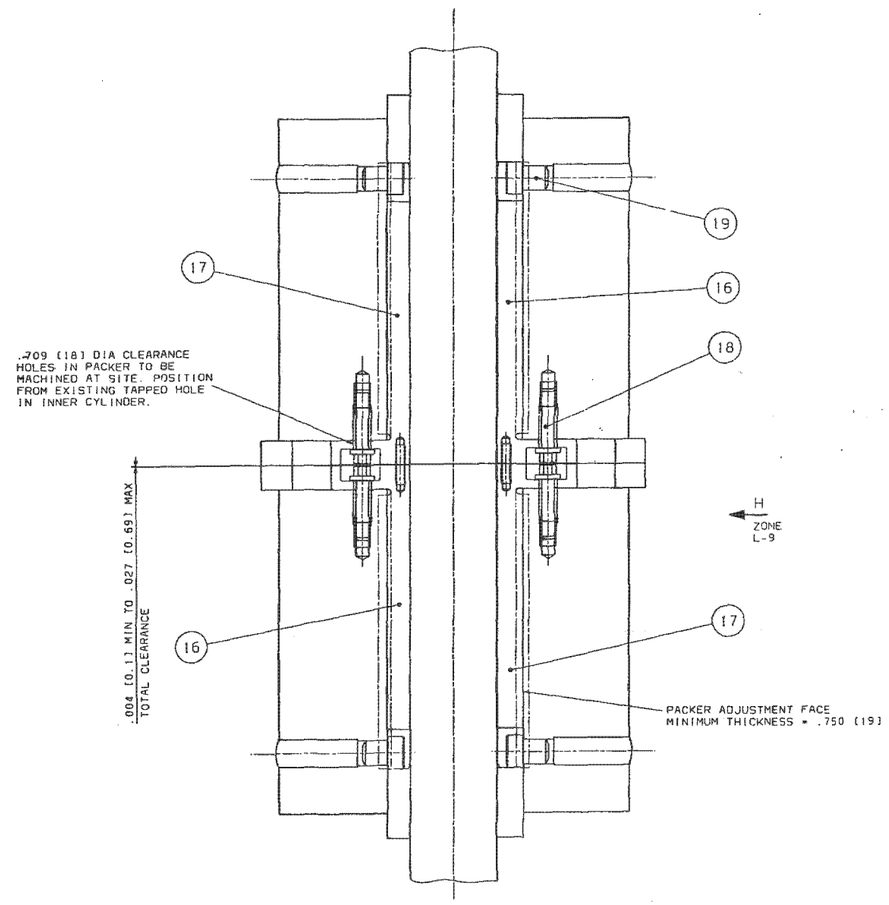

SECTION J-J
ZONE E-9

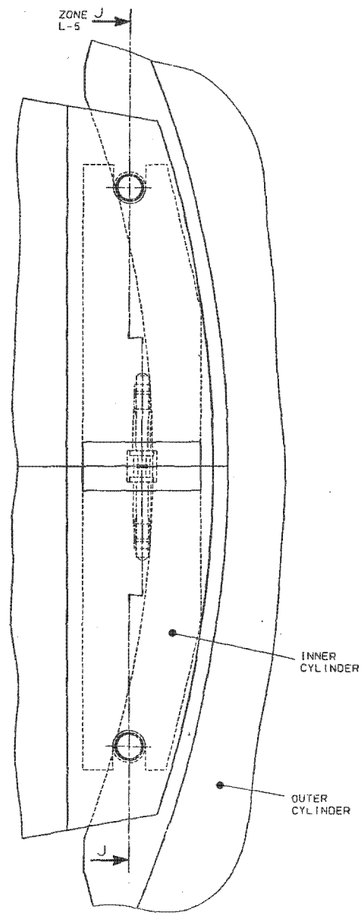

VIEW ON ARROW H
ZONE H-7

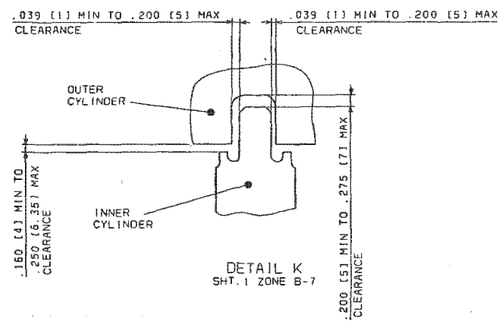

DETAIL K
SHT. 1 ZONE B-7

TITLE
HP CYLINDER INTERFACE

A

IP7011431

DRG. No. R202/A0/5396 SHEET No. 2 OF 6 SHEETS

DIMENSIONS IN INCHES UNLESS OTHERWISE STATED

NOTE:
HOLDING DOWN COVER PLATES REF. 14
TO BE FITTED AFTER MODULE ASSY.

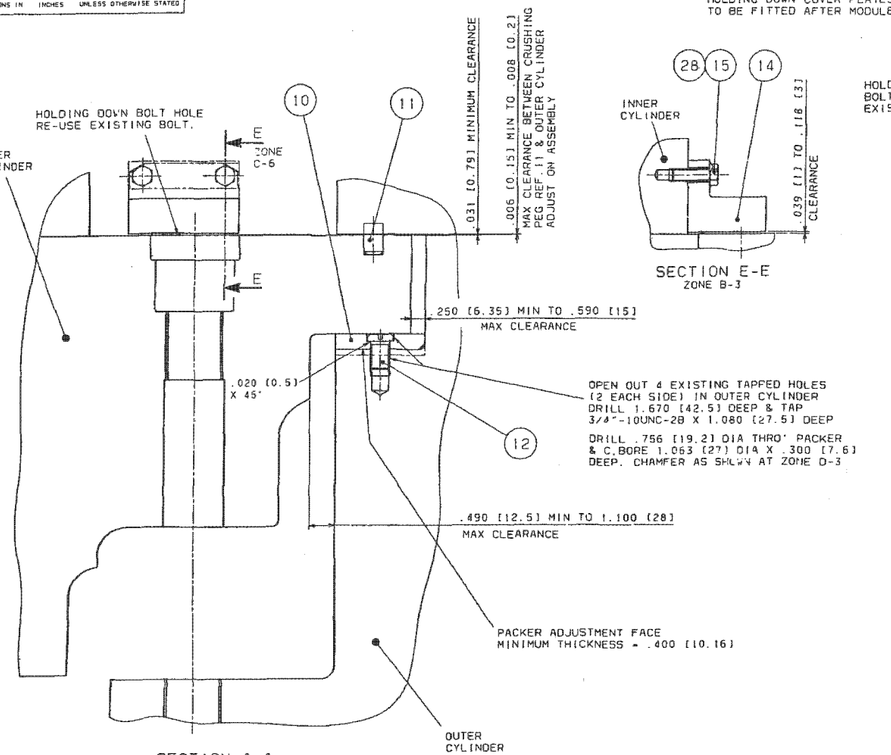

SECTION A-A
SHT. 1 ZONE D-13

SECTION E-E
ZONE B-3

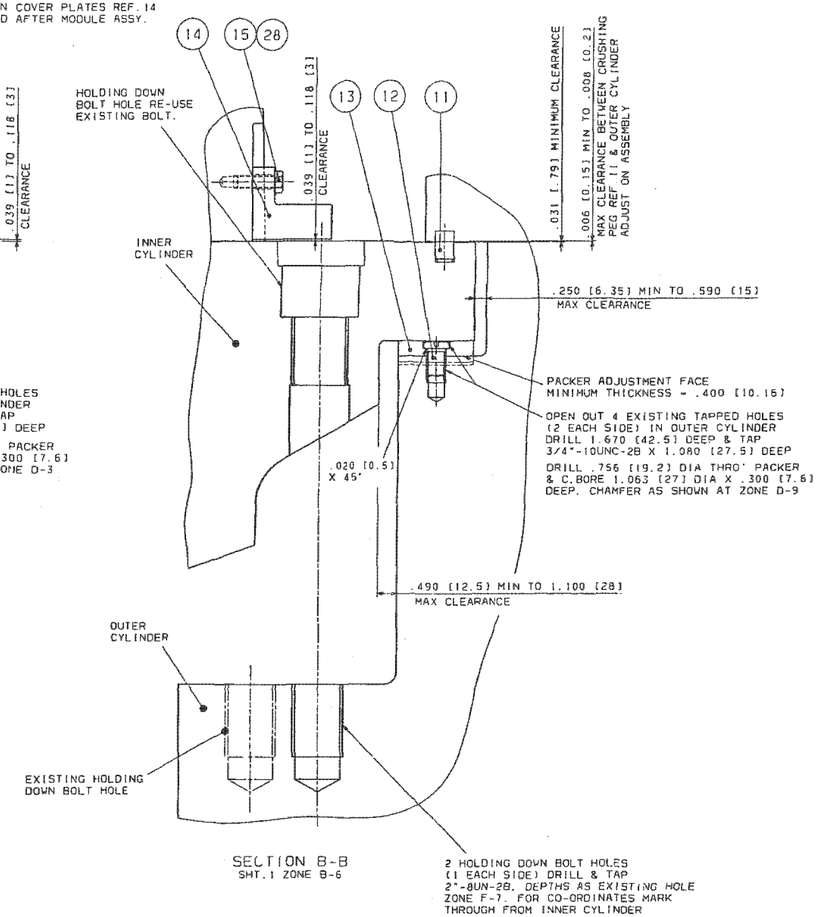

SECTION B-B
SHT. 1 ZONE B-6

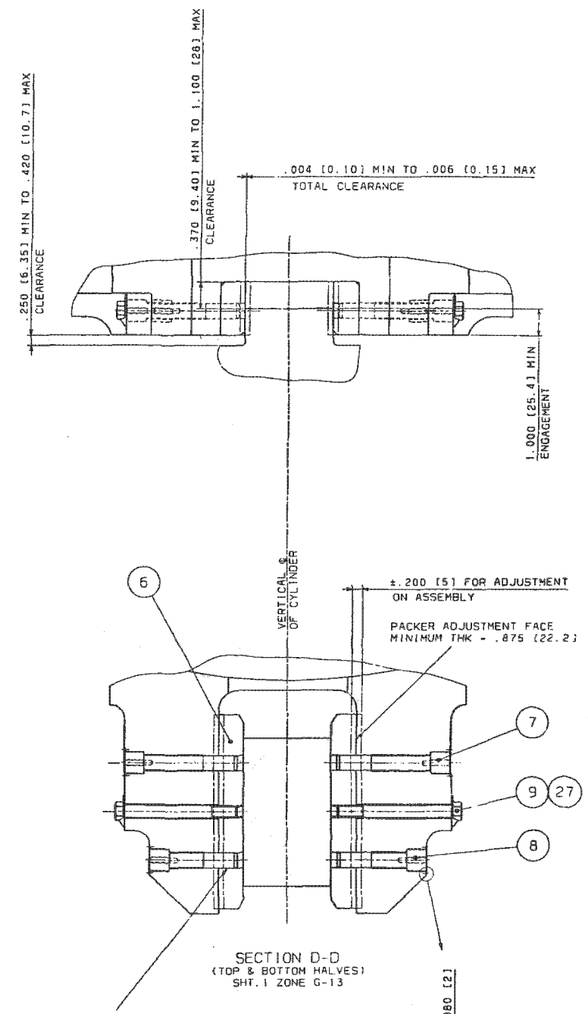

SECTION D-D
(TOP & BOTTOM HALVES)
SHT. 1 ZONE G-13

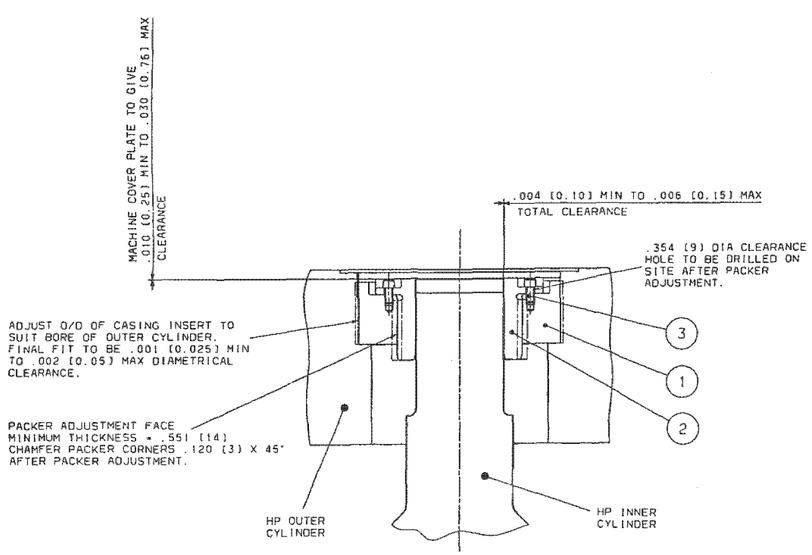

SECTION SHOWING TOP GIB KEY
SEE SHT. 1 ZONE J-4

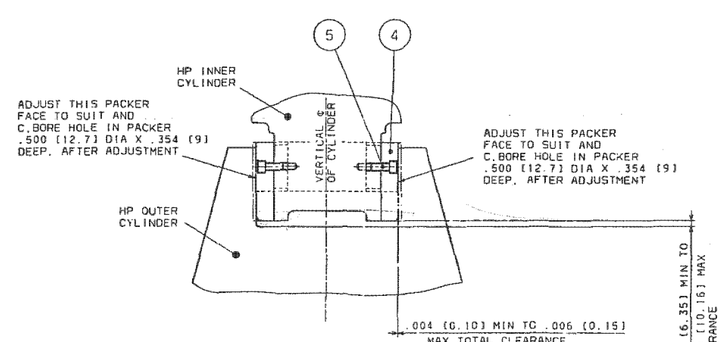

SECTION C-C
(BOTTOM HALF ONLY)
SHT. 1 ZONE J-5

TITLE
HP CYLINDER INTERFACE

IP7011432

DRG No. R202/A0/5396 SHEET No. 6 OF 6 SHEETS

DIMENSIONS IN INCHES UNLESS OTHERWISE STATED

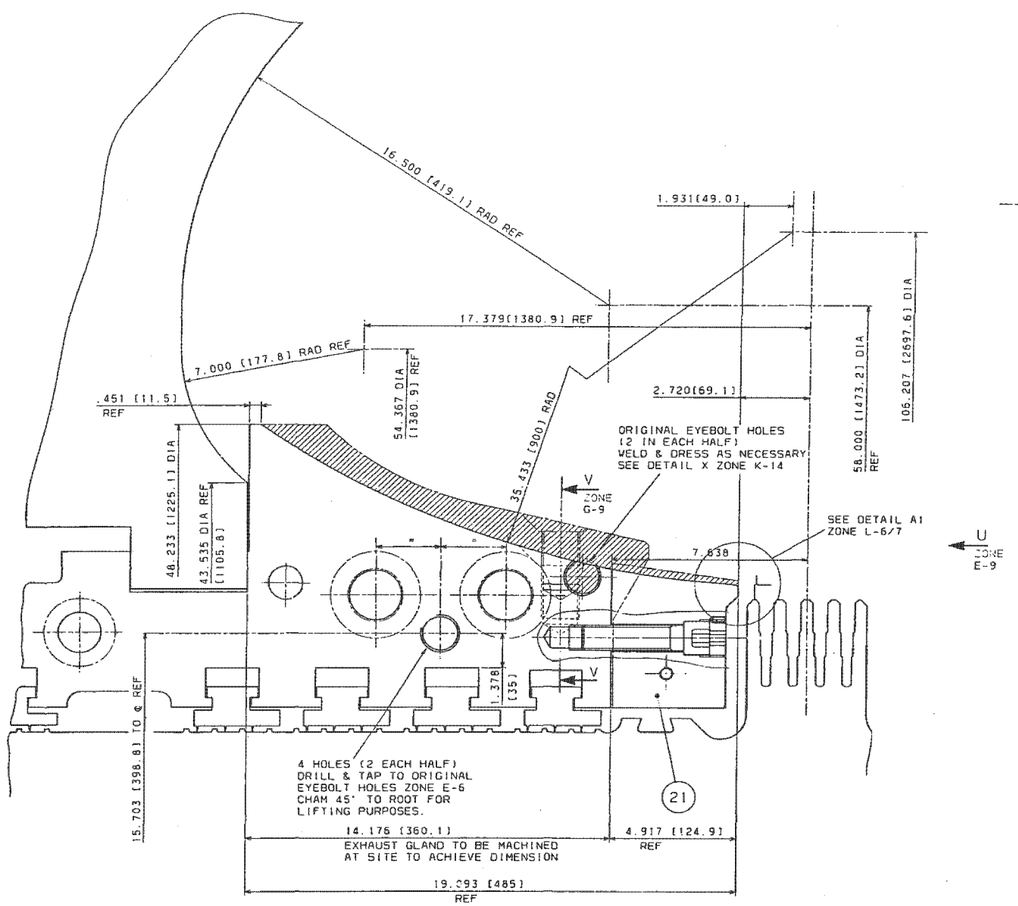

DETAIL W
SHT. 1 ZONE F-4

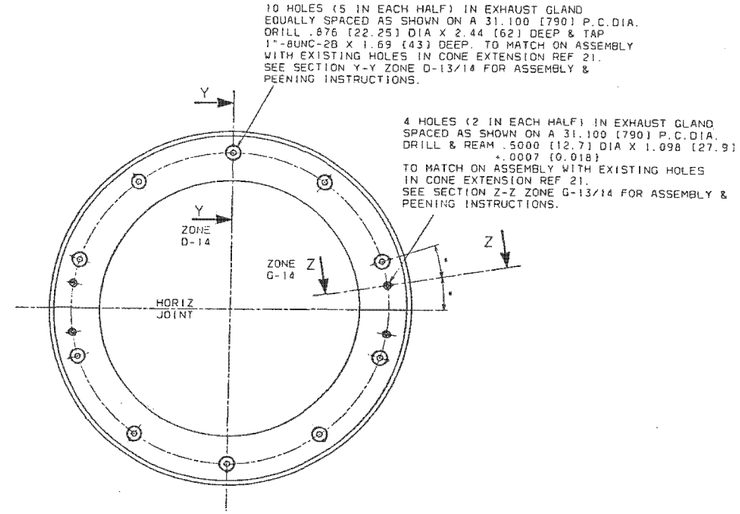

VIEW ON ARROW U
ZONE F-7/8
SCALE 1:5

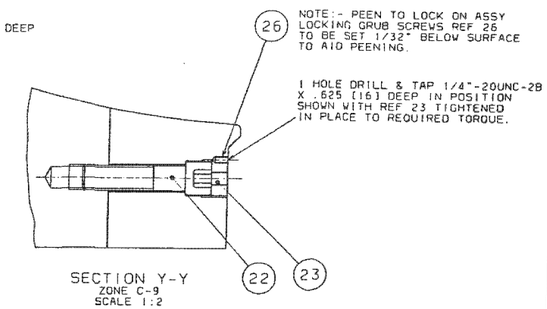

SECTION Y-Y
ZONE C-9
SCALE 1:2

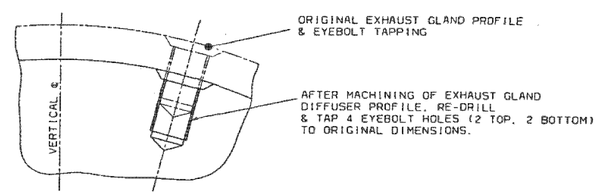

PART SECTION V-V
ZONE E-5

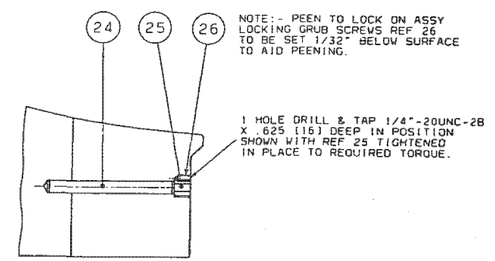

SECTION Z-Z
ZONE C-9/10
SCALE 1:2

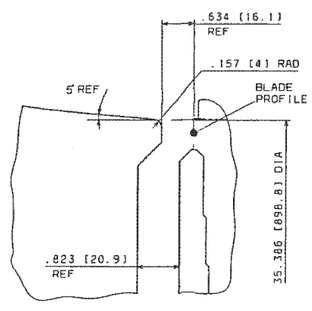

DETAIL A1
ZONE E-7
SCALE 1:1

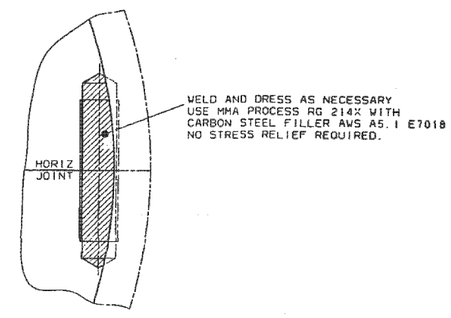

DETAIL X
ZONE E-6

THIRD ANGLE PROJECTION	DRAWN N. SEWELL	CHECKED S.L.H.	Alstom Energy Ltd Steam Turbines	

TITLE
HP CYLINDER INTERFACE

IP7011433