7653.5 Net Turbine Cycle Heat Rate 87.69 % HP Efficiency
88.71 % IP Efficiency

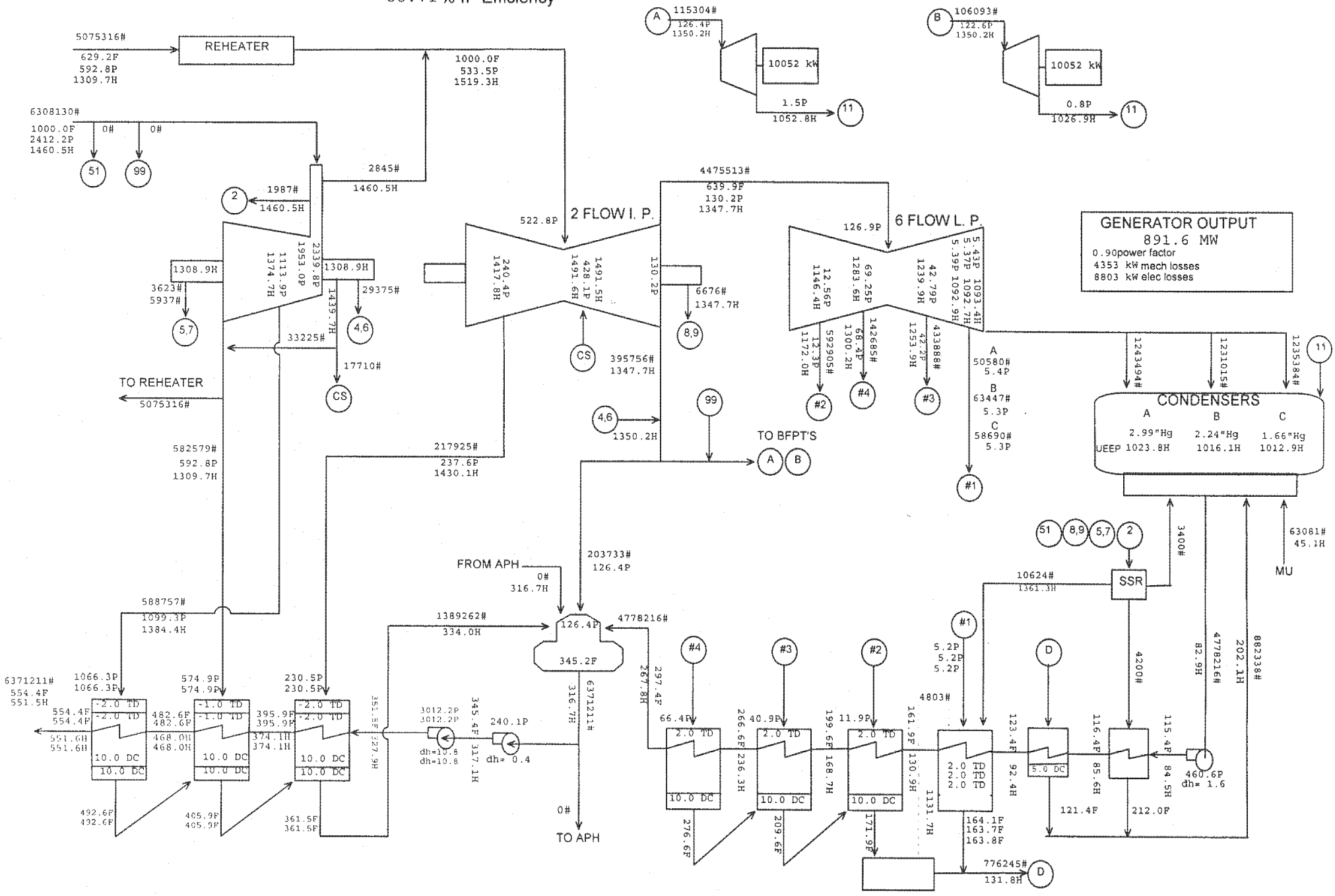

IGS - Unit 1 Benchmark Test @ VWO

IP7010535

7689.2 Net Turbine Cycle Heat Rate 87.10 % HP Efficiency
90.05 % IP Efficiency

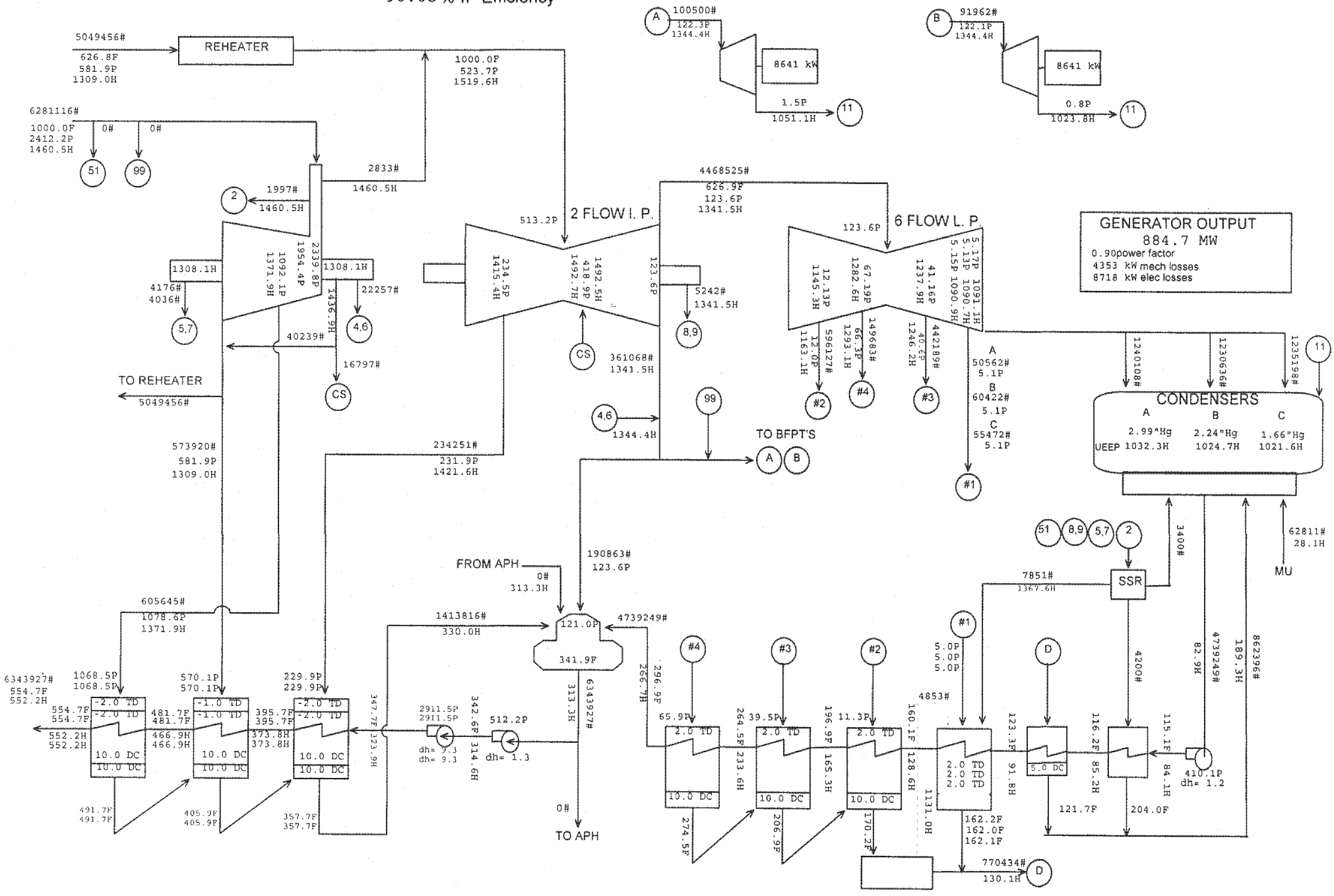

IGS - Unit 2 Benchmark Test @ VWO

IP7010536

7942.6 Net Turbine Cycle Heat Rate 85.54 % HP Efficiency
90.93 % IP Efficiency

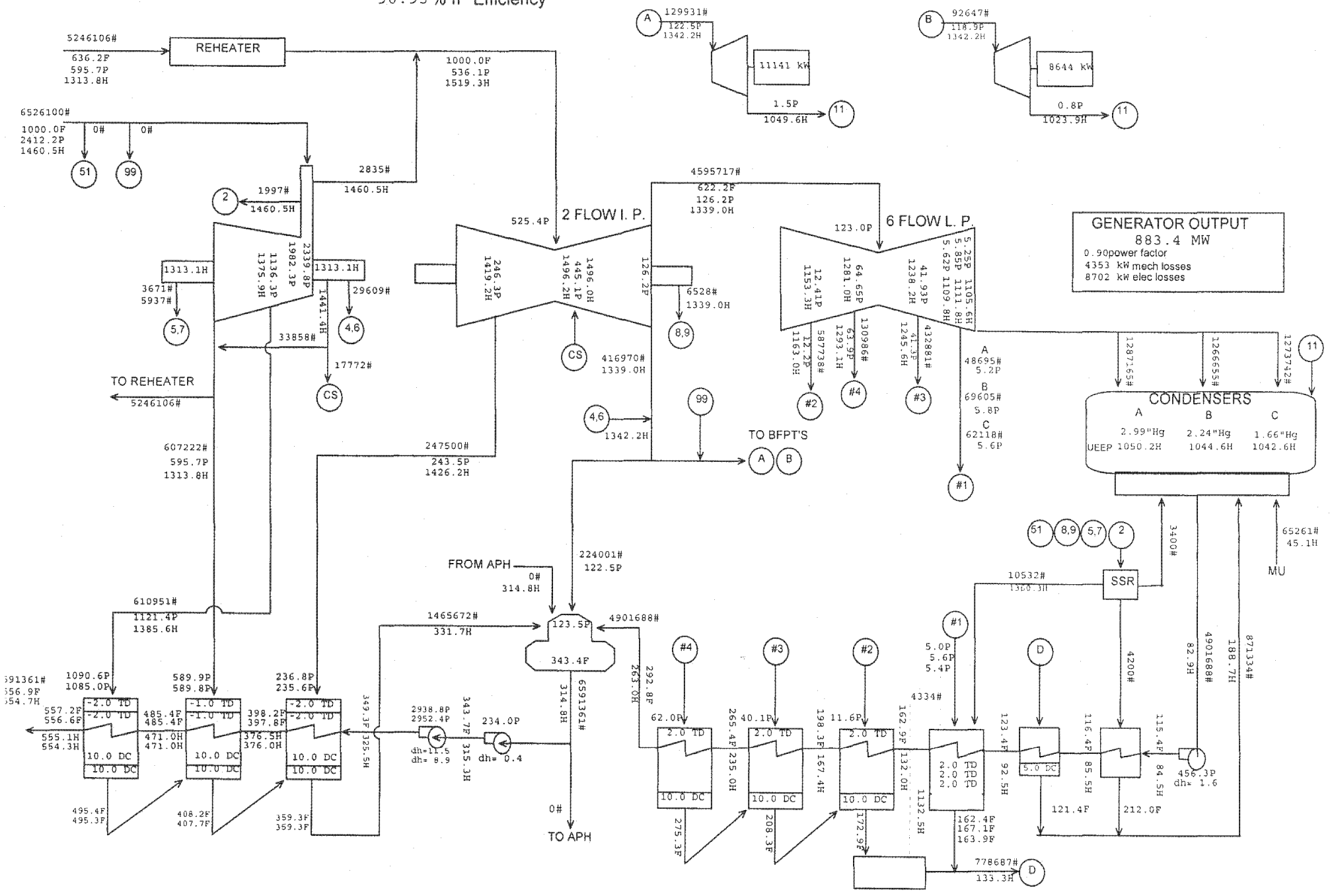

IGS - Unit 1 Operating Heat Balance (Corr Test)

IP7010537

7719.9 Net Turbine Cycle Heat Rate 84.05 % HP Efficiency
91.35 % IP Efficiency

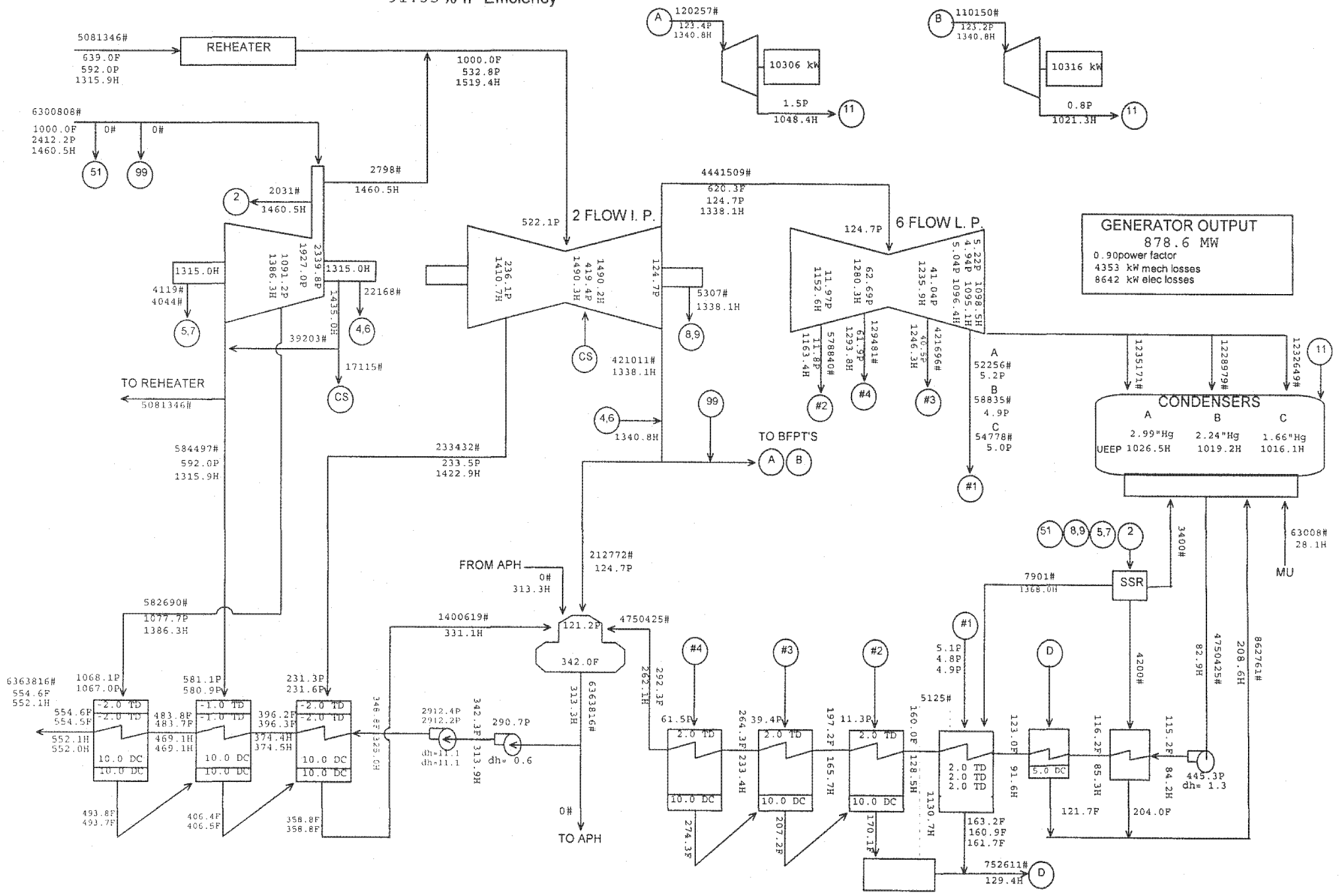

IGS - Unit 2 Operating Heat Balance (Corr Test)

IP70105538

7862.1 Net Turbine Cycle Heat Rate 93.00 % HP Efficiency
91.22 % IP Efficiency

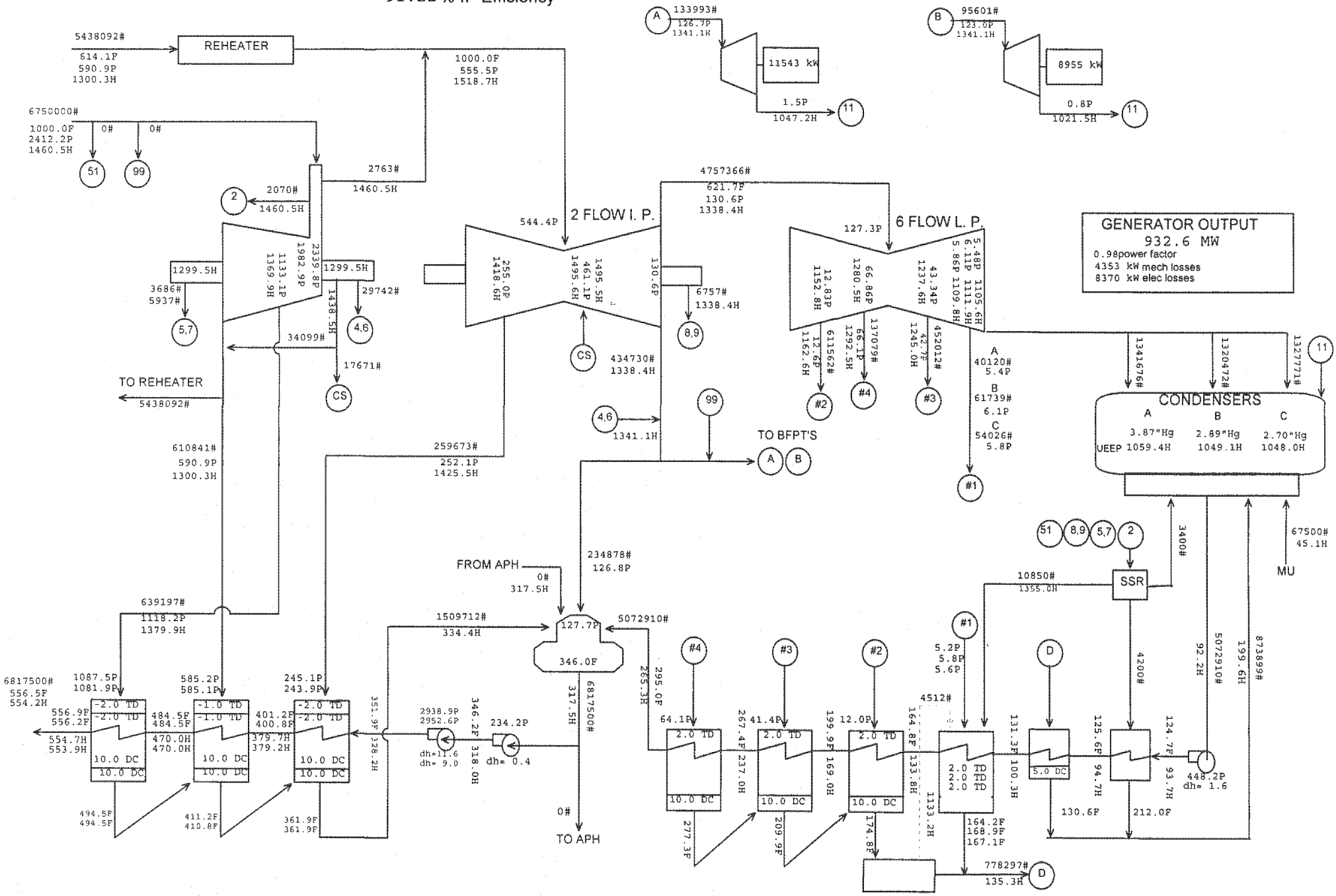

IGS - Unit 1 Operating Heat Balance @ 6,750 kpph, 93% HP Eff

IP7010539

7623.5 Net Turbine Cycle Heat Rate 93.00 % HP Efficiency
91.53 % IP Efficiency

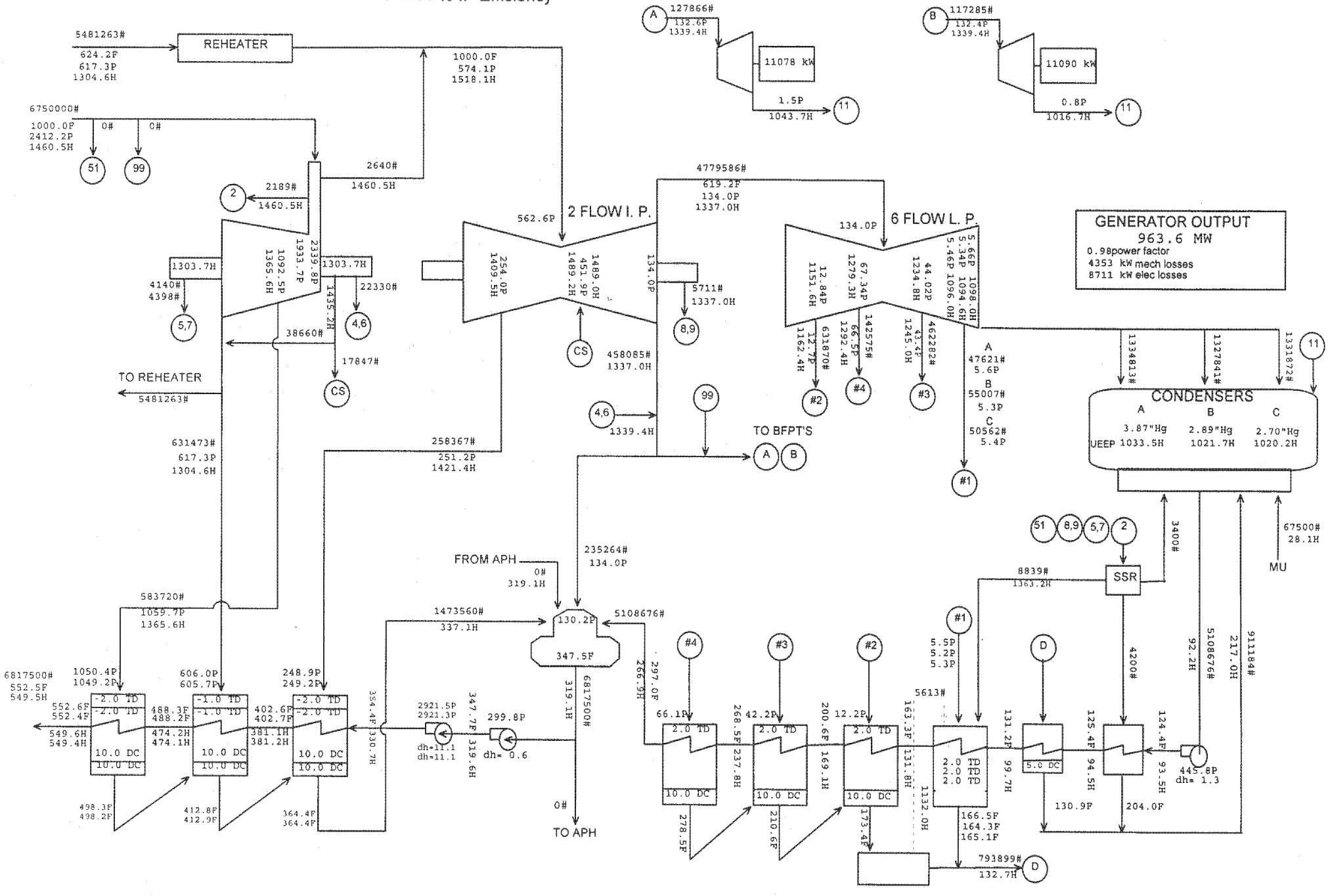

IGS - Unit 2 Operating Heat Balance @ 6,750 kpph, 93% HP Eff

IP7010540

7862.1 Net Turbine Cycle Heat Rate 93.00 % HP Efficiency
91.22 % IP Efficiency

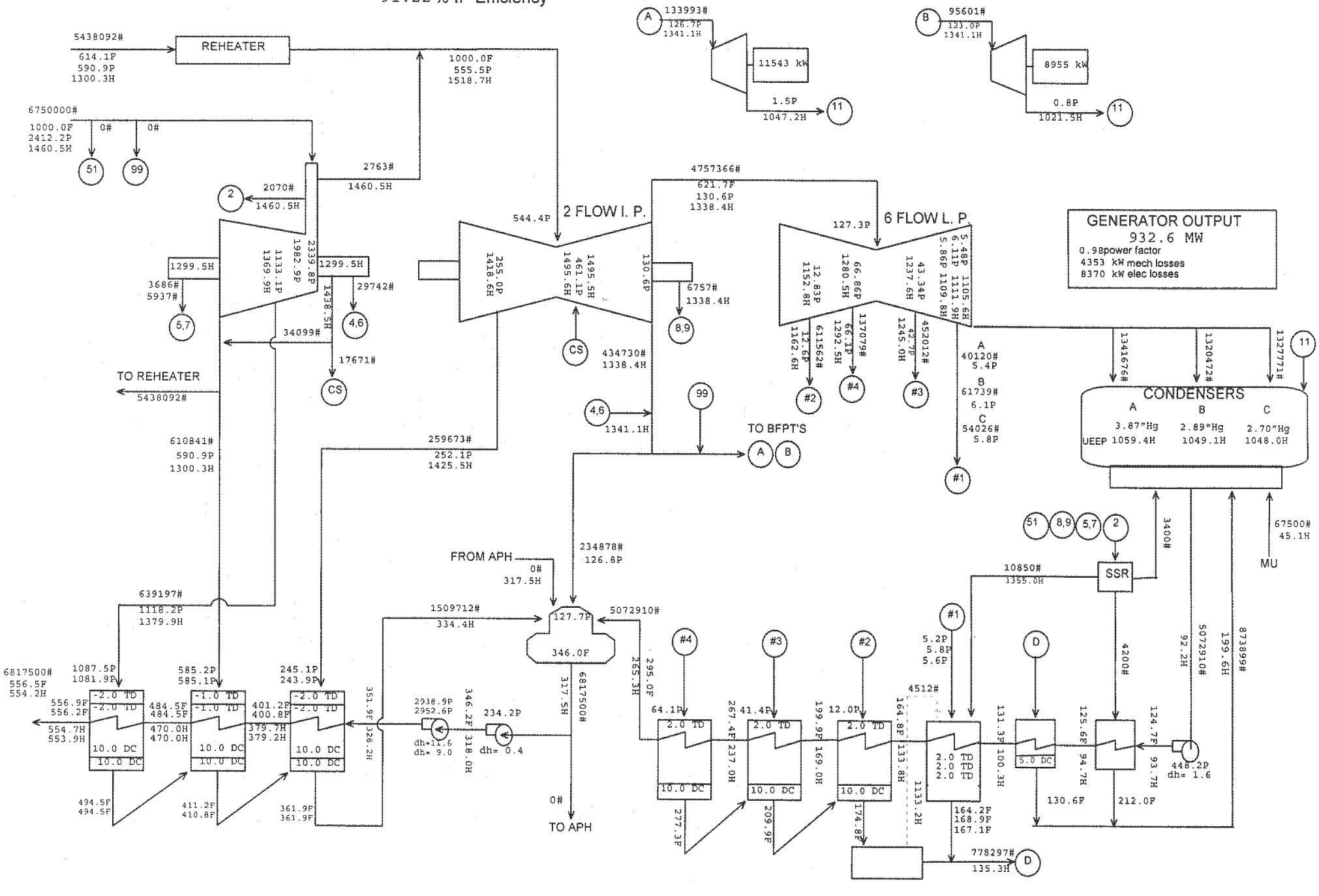

IGS - Unit 1 Operating Heat Balance @ 6,750 kpph, 93% HP Eff

IP7010541

7862.1 Net Turbine Cycle Heat Rate 93.00% HP Efficiency
91.22% IP Efficiency

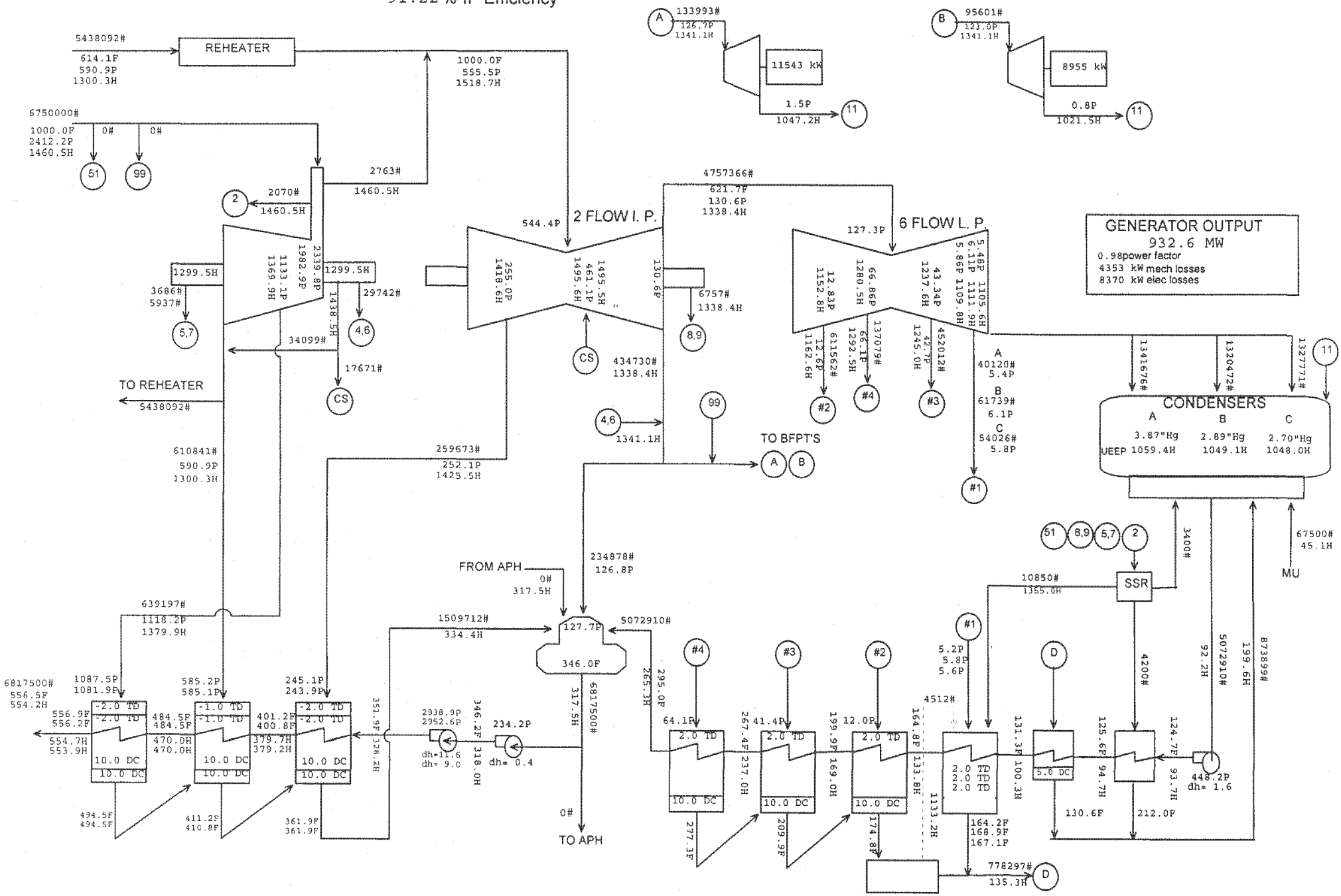

IGS - Unit 1 Operating Heat Balance @ 6,750 kpph, 93% HP Eff

IP7010542

7623.5 Net Turbine Cycle Heat Rate 93.00 % HP Efficiency
91.53 % IP Efficiency

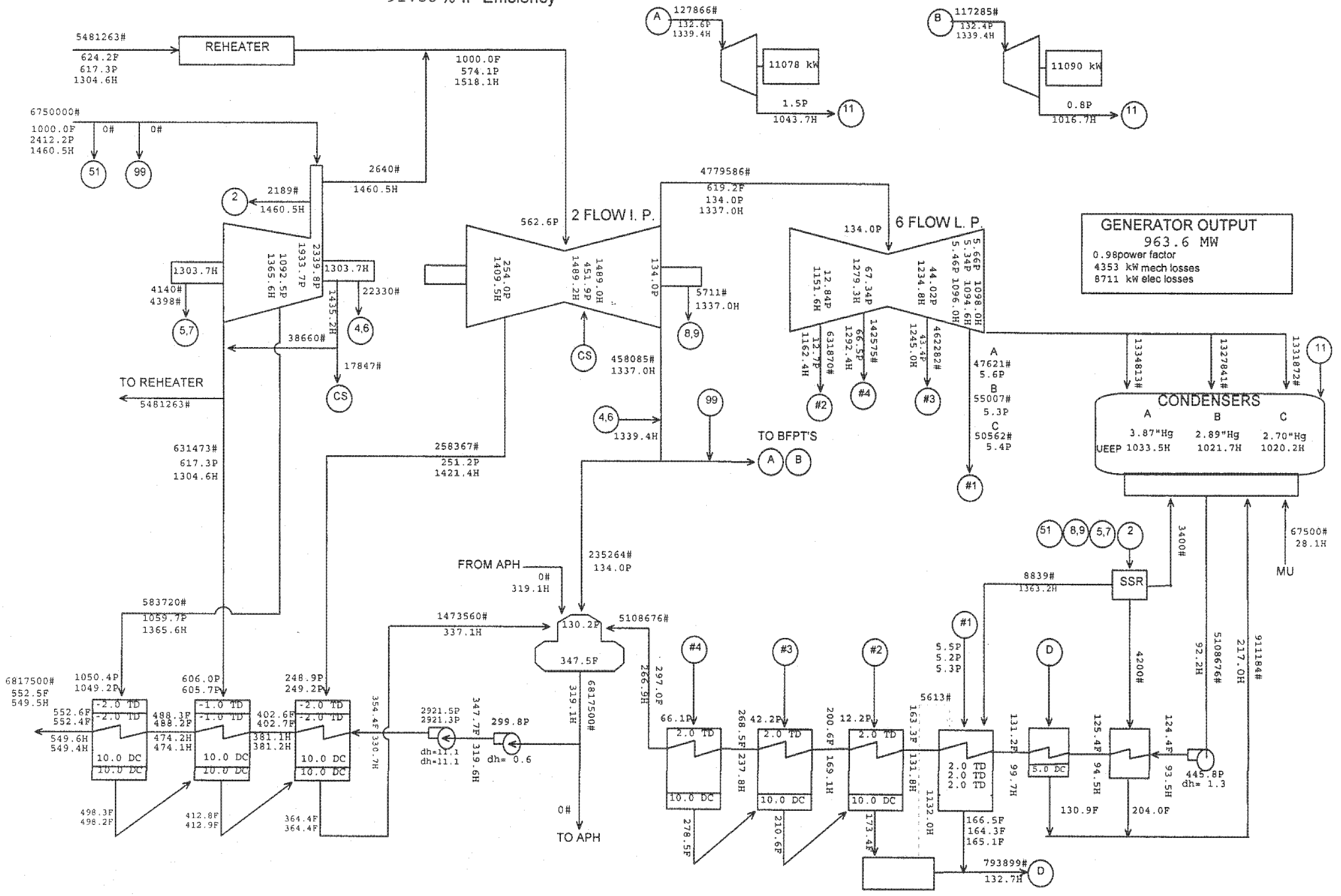

IGS - Unit 2 Operating Heat Balance @ 6,750 kpph, 93% HP Eff

IP7010543

7623.5 Net Turbine Cycle Heat Rate 93.00 % HP Efficiency
91.53 % IP Efficiency

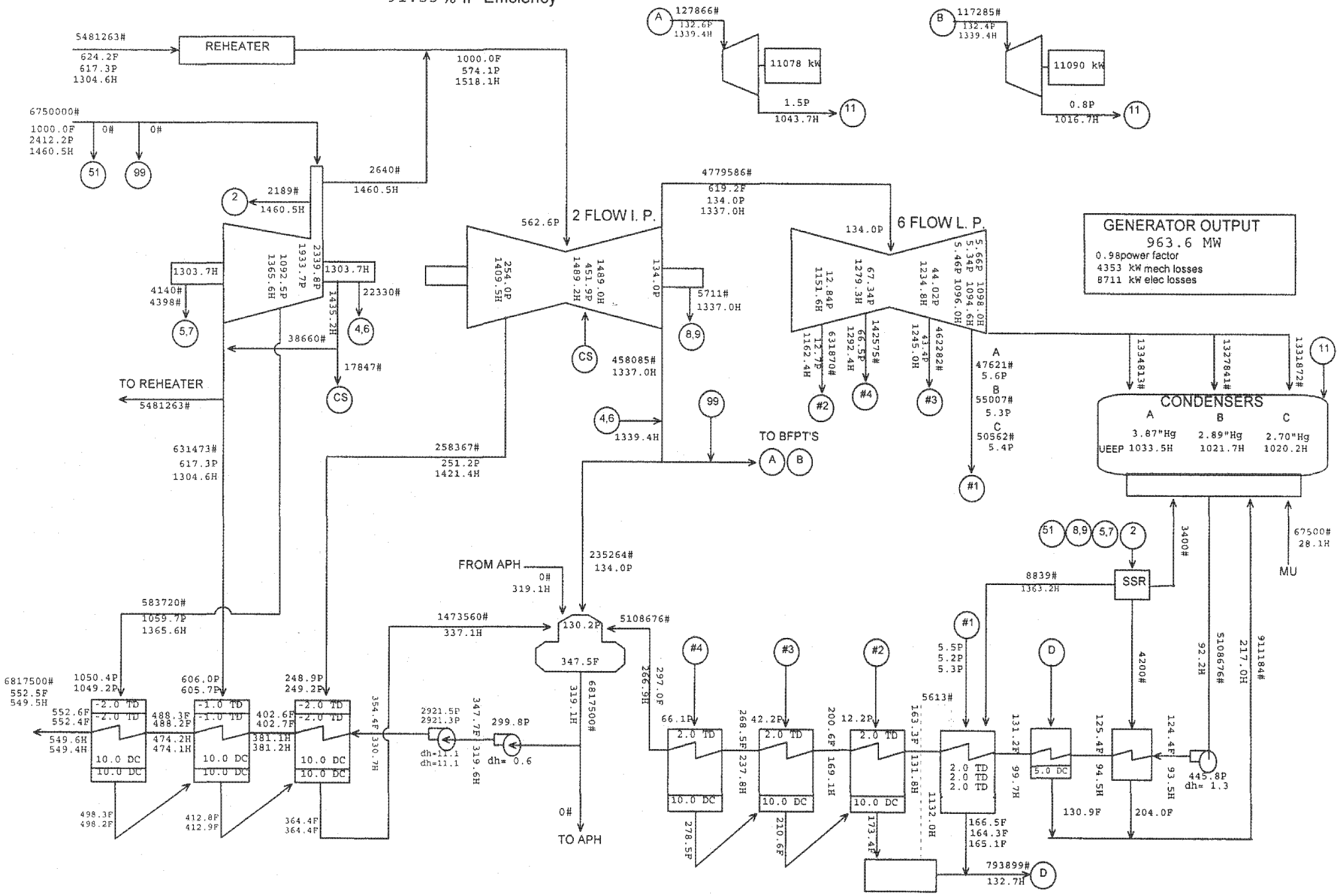

IGS - Unit 2 Operating Heat Balance @ 6,750 kpph, 93% HP Eff

IP7010544