High Pressure Turbine Replacement- Proposed Design

11/10/00 U2 Proposed Design Tests, Actual Cond Press

	U2 92% HP VWO 6,750 kpph	U2 92% HP VWO 6,900 kpph	U2 93% HP VWO 6,750 kpph	U2 93% HP VWO 6,900 kpph
Gross Power (Mw)	960.7	979.6	963.6	982.6
NTCHR (Btu/kwh)	7,638	7,644	7,623	7,630
Throttle flow (kpph)	**6,750**	**6,900**	**6,750**	**6,900**
Throttle press (psia)	2,412.2	2,412.2	2,412.2	2,412.2
Throttle temp (°F)	1,000	1,000	1,000	1,000
Hot Reheat temp (°F)	1,000	1,000	1,000	1,000
Reheater flow (kpph)	5,483.3	5,619.8	5,481.3	5,617.7
% Reheater press drop (%)	7	7	7	7
Reheater duty (MBtu/h)	1,162	1,175	1,170	1,184
High Pressure Turbine				
Efficiency (%)	92	92	93	93
Wheel power (Mw)	293.2	295.8	296.4	299.0
% Total Wheel power	30.1	29.8	30.4	30.0
Section press drop (psi)	1,722.2	1,707.1	1,722.5	1,707.3
1st stg shell press (psia)	1,933.8	1,933.8	1,933.8	1,933.8
1st stg press drop (psi)	406.1	406.1	406.1	406.1
4th stg ext press (psia)	1,092.5	1,092.5	1,092.5	1,092.5
4th stg ext enthalpy (Btu/lb)	1,366.7	1,366.6	1,365.6	1,365.6
Exhaust press (psia)	617.6	632.7	617.3	632.5
Exhaust enthalpy (Btu/lb)	1,305.4	1,307.8	1,303.7	1,306.2
Intermediat Pressure Turbine				
Efficiency (%)	91.51	91.52	91.53	91.54
Wheel power (Mw)	285.3	292.3	285.2	292.2
% Total Wheel power	29.3	29.4	29.2	29.3
8th stg bowl press (psia)	562.85	576.66	562.65	576.45
Section press drop (psi)	428.76	439.39	428.61	439.22
Exhaust press (psia)	134.09	137.3	134.04	137.23
Exhaust enthalpy (Btu/lb)	1,337.0	1,336.6	1,337.0	1,336.6
Low Pressure Turbines				
Wheel power (Mw)	395.2	404.8	395.0	404.6
% Total Wheel power	40.6	40.8	40.4	40.6
LPA exhaust press ("hg)	3.87	3.97	3.87	3.97
LPB exhaust press ("hg)	2.89	2.95	2.89	2.95
LPC exhaust press ("hg)	2.70	2.75	2.70	2.75

IP7010525

High Pressure Turbine Replacement- Proposed Design

11/10/00

U2 Proposed Design Tests, Actual Cond Press

	U2 92% HP VWO 6,750 kpph	U2 92% HP VWO 6,900 kpph	U2 93% HP VWO 6,750 kpph	U2 93% HP VWO 6,900 kpph
Stage Bowl Flow				
HP 1st stg flow (lb/hr)	6,745,170	6,895,170	6,745,170	6,895,170
HP 2-5th stg flow (lb/hr)	6,670,921	6,820,920	6,670,902	6,820,902
HP 6-7th stg flow (lb/hr)	6,088,214	6,246,676	6,087,183	6,245,636
IP 8th stg flow (lb/hr)	5,485,909	5,622,347	5,483,903	5,620,323
IP 9-11th stg flow (lb/hr)	5,503,758	5,640,636	5,501,750	5,638,609
IP 12-14th stg flow (lb/hr)	5,245,268	5,373,468	5,243,383	5,371,566
LP 15th stg flow (lb/hr)	4,781,339	4,896,783	4,779,586	4,895,016
LP 16th stg flow (lb/hr)	4,638,700	4,749,598	4,637,011	4,747,897
LP 17-18th stg flow (lb/hr)	4,318,857	4,420,239	4,317,304	4,418,675
LPA 19th stg flow (lb/hr)	1,382,928	1,415,155	1,382,434	1,414,657
LPB 19th stg flow (lb/hr)	1,383,343	1,415,580	1,382,849	1,415,082
LPC 19th stg flow (lb/hr)	1,382,928	1,415,155	1,382,434	1,414,657
LPA 20th stg flow (lb/hr)	1,335,265	1,366,242	1,334,813	1,365,788
LPB 20th stg flow (lb/hr)	1,328,296	1,359,030	1,327,841	1,358,573
LPC 20th stg flow (lb/hr)	1,332,328	1,363,194	1,331,872	1,362,735
Stage Bowl Pressure				
HP 1st stg press (psia)	2339.83	2339.83	2339.83	2339.83
HP 2-5th stg press (psia)	1933.75	1933.75	1933.75	1933.75
HP 6-7th stg press (psia)	1092.51	1092.51	1092.51	1092.51
IP 8th stg press (psia)	562.85	576.66	562.65	576.45
IP 9-11th stg press (psia)	452.05	463.14	451.89	462.98
IP 12-14th stg press (psia)	254.12	260.23	254.03	260.14
LP 15th stg press (psia)	134.09	137.27	134.04	137.23
LP 16th stg press (psia)	67.36	68.94	67.34	68.92
LP 17-18th stg press (psia)	44.03	45.05	44.02	45.03
LPA 19th stg press (psia)	12.84	13.13	12.84	13.13
LPB 19th stg press (psia)	12.84	13.13	12.84	13.13
LPC 19th stg press (psia)	12.84	13.13	12.84	13.13
LPA 20th stg press (psia)	5.66	5.79	5.66	5.79
LPB 20th stg press (psia)	5.35	5.47	5.34	5.47
LPC 20th stg press (psia)	5.46	5.59	5.46	5.59
Stage Press Drop				
HP 1st stg press drop (psi)	406.08	406.08	406.08	406.08
HP 2-5th stg press drop (psi)	841.24	841.24	841.24	841.24
HP 6-7th stg press drop (psi)	474.91	459.81	475.21	460.01
IP 8th stg press drop (psi)	110.80	113.52	110.76	113.47
IP 9-11th stg press drop (psi)	197.93	202.91	197.86	202.84
IP 12-14th stg press drop (psi)	120.03	122.96	119.99	122.91
LP 15th stg press drop (psi)	66.73	68.33	66.70	68.31
LP 16th stg press drop (psi)	23.33	23.89	23.32	23.89
LP 17-18th stg press drop (psi)	31.19	31.92	31.18	31.90
LPA 19th stg press drop (psi)	7.18	7.34	7.18	7.34
LPB 19th stg press drop (psi)	7.49	7.66	7.50	7.66
LPC 19th stg press drop (psi)	7.38	7.54	7.38	7.54
LPA 20th stg press drop (psi)	3.76	3.84	3.76	3.84
LPB 20th stg press drop (psi)	3.93	4.02	3.92	4.02
LPC 20th stg press drop (psi)	4.13	4.24	4.13	4.24

IP7010526

7629.7 Net Turbine Cycle Heat Rate 93.00 % HP Efficiency
91.54 % IP Efficiency

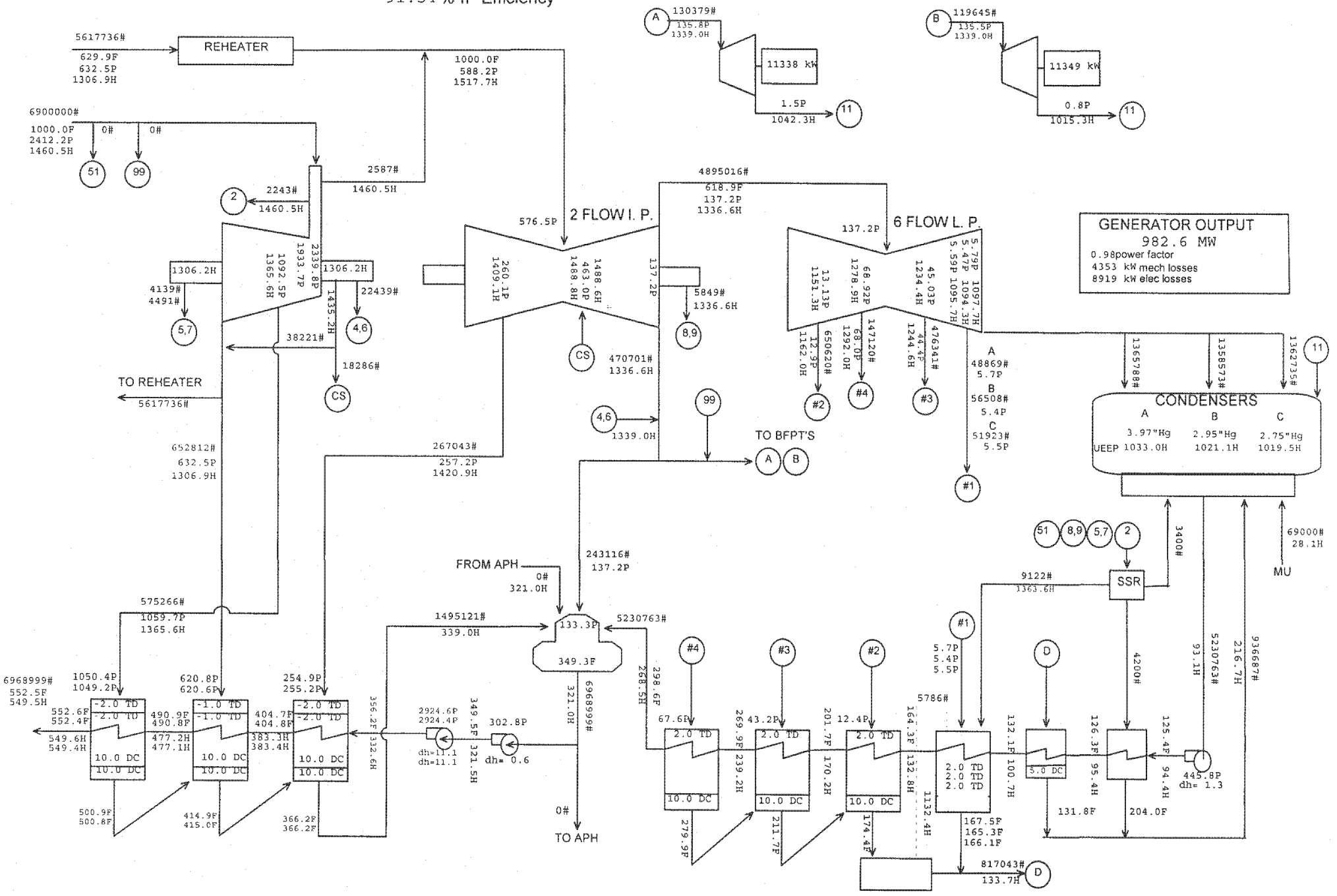

IGS - Unit 2 Operating Heat Balance @ 6,900 kpph, 93% HP Eff

IP7010527

High Pressure Turbine Replacement- Proposed Design

11/10/00 U1 Proposed Design Tests, Actual Cond Press,

	U1 92% HP VWO 6,750 kpph	U1 92% HP VWO 6,900 kpph	U1 93% HP VWO 6,750 kpph	U1 93% HP VWO 6,900 kpph
Gross Power (Mw)	929.7	947.7	932.7	950.7
NTCHR (Btu/kwh)	7,878	7,886	7,862	7,871
Throttle flow (kpph)	**6,750**	**6,900**	**6,750**	**6,900**
Throttle press (psia)	2,412.2	2,412.2	2,412.2	2,412.2
Throttle temp (°F)	1,000	1,000	1,000	1,000
Hot Reheat temp (°F)	1,000	1,000	1,000	1,000
Reheater flow (kpph)	5,440.1	5,575.3	5,438.1	5,573.3
% Reheater press drop (%)	6	6	6	6
Reheater duty (MBtu/h)	1,179	1,193	1,188	1,202
High Pressure Turbine				
Efficiency (%)	92	92	93	93
Wheel power (Mw)	297.0	299.7	300.2	303.1
% Total Wheel power	31.5	31.2	31.8	31.4
Section press drop (psi)	1,748.7	1,734.2	1,748.9	1,734.4
1st stg shell press (psia)	1,982.9	1,982.9	1,982.9	1,982.9
1st stg press drop (psi)	356.9	356.9	356.9	356.9
4th stg ext press (psia)	1,133.1	1,133.1	1,133.1	1,133.1
4th stg ext enthalpy (Btu/lb)	1,370.9	1,370.9	1,369.9	1,369.9
Exhaust press (psia)	591.1	605.6	590.9	605.4
Exhaust enthalpy (Btu/lb)	1,301.3	1,303.6	1,299.5	1,301.9
Intermediat Pressure Turbine				
Efficiency (%)	91.19	91.20	91.22	91.23
Wheel power (Mw)	281.4	288.3	281.3	288.2
% Total Wheel power	29.9	30.0	29.8	29.9
8th stg bowl press (psia)	544.54	557.88	544.35	557.69
Section press drop (psi)	417.22	427.54	417.08	427.4
Exhaust press (psia)	127.32	130.3	127.27	130.29
Exhaust enthalpy (Btu/lb)	1,338.4	1,338.1	1,338.4	1,338.1
Low Pressure Turbines				
Wheel power (Mw)	364.0	372.6	363.9	372.4
% Total Wheel power	38.6	38.8	38.5	38.6
LPA exhaust press ("hg)	3.87	3.97	3.87	3.97
LPB exhaust press ("hg)	2.89	2.95	2.89	2.95
LPC exhaust press ("hg)	2.70	2.75	2.70	2.75

IP7010528

High Pressure Turbine Replacement- Proposed Design

11/10/00

U1 Proposed Design Tests, Actual Cond Press,

	U1 92% HP VWO 6,750 kpph	U1 92% HP VWO 6,900 kpph	U1 93% HP VWO 6,750 kpph	U1 93% HP VWO 6,900 kpph
Stage Bowl Flow				
HP 1st stg flow (lb/hr)	6,745,167	6,895,167	6,745,167	6,895,167
HP 2-5th stg flow (lb/hr)	6,673,102	6,823,102	6,673,086	6,823,086
HP 6-7th stg flow (lb/hr)	6,034,859	6,191,318	6,033,889	6,190,339
IP 8th stg flow (lb/hr)	5,442,813	5,577,962	5,440,855	5,575,967
IP 9-11th stg flow (lb/hr)	5,460,487	5,596,070	5,458,526	5,594,073
IP 12-14th stg flow (lb/hr)	5,200,693	5,327,627	5,198,853	5,325,754
LP 15th stg flow (lb/hr)	4,759,073	4,873,793	4,757,366	4,872,057
LP 16th stg flow (lb/hr)	4,621,934	4,732,297	4,620,287	4,730,623
LP 17-18th stg flow (lb/hr)	4,306,869	4,407,883	4,305,354	4,406,343
LPA 19th stg flow (lb/hr)	1,382,280	1,414,479	1,381,797	1,413,987
LPB 19th stg flow (lb/hr)	1,382,695	1,414,903	1,382,211	1,414,411
LPC 19th stg flow (lb/hr)	1,382,280	1,414,479	1,381,797	1,413,987
LPA 20th stg flow (lb/hr)	1,342,130	1,373,143	1,341,676	1,372,682
LPB 20th stg flow (lb/hr)	1,320,914	1,351,420	1,320,472	1,350,971
LPC 20th stg flow (lb/hr)	1,328,216	1,358,941	1,327,771	1,358,489
Stage Bowl Pressure				
HP 1st stg press (psia)	2339.83	2339.83	2339.83	2339.83
HP 2-5th stg press (psia)	1982.91	1982.91	1982.91	1982.91
HP 6-7th stg press (psia)	1133.09	1133.09	1133.09	1133.09
IP 8th stg press (psia)	544.54	557.88	544.35	557.69
IP 9-11th stg press (psia)	461.29	472.59	461.13	472.42
IP 12-14th stg press (psia)	255.05	261.17	254.96	261.08
LP 15th stg press (psia)	127.32	130.34	127.27	130.29
LP 16th stg press (psia)	66.89	68.46	66.86	68.43
LP 17-18th stg press (psia)	43.35	44.35	43.34	44.33
LPA 19th stg press (psia)	12.84	13.13	12.83	13.12
LPB 19th stg press (psia)	12.84	13.13	12.83	13.12
LPC 19th stg press (psia)	12.84	13.13	12.83	13.12
LPA 20th stg press (psia)	5.48	5.61	5.48	5.61
LPB 20th stg press (psia)	6.11	6.25	6.11	6.25
LPC 20th stg press (psia)	5.86	6.00	5.86	6.00
Stage Press Drop				
HP 1st stg press drop (psi)	356.92	356.92	356.92	356.92
HP 2-5th stg press drop (psi)	849.82	849.82	849.82	849.82
HP 6-7th stg press drop (psi)	541.99	527.49	542.19	527.69
IP 8th stg press drop (psi)	83.25	85.29	83.22	85.27
IP 9-11th stg press drop (psi)	206.24	211.42	206.17	211.34
IP 12-14th stg press drop (psi)	127.73	130.83	127.69	130.79
LP 15th stg press drop (psi)	60.43	61.88	60.41	61.86
LP 16th stg press drop (psi)	23.54	24.11	23.52	24.10
LP 17-18th stg press drop (psi)	30.51	31.22	30.51	31.21
LPA 19th stg press drop (psi)	7.36	7.52	7.35	7.51
LPB 19th stg press drop (psi)	6.73	6.88	6.72	6.87
LPC 19th stg press drop (psi)	6.98	7.13	6.97	7.12
LPA 20th stg press drop (psi)	3.58	3.66	3.58	3.66
LPB 20th stg press drop (psi)	4.69	4.80	4.69	4.80
LPC 20th stg press drop (psi)	4.53	4.65	4.53	4.65

IP7010529

7870.7 Net Turbine Cycle Heat Rate 93.00% HP Efficiency
91.23% IP Efficiency

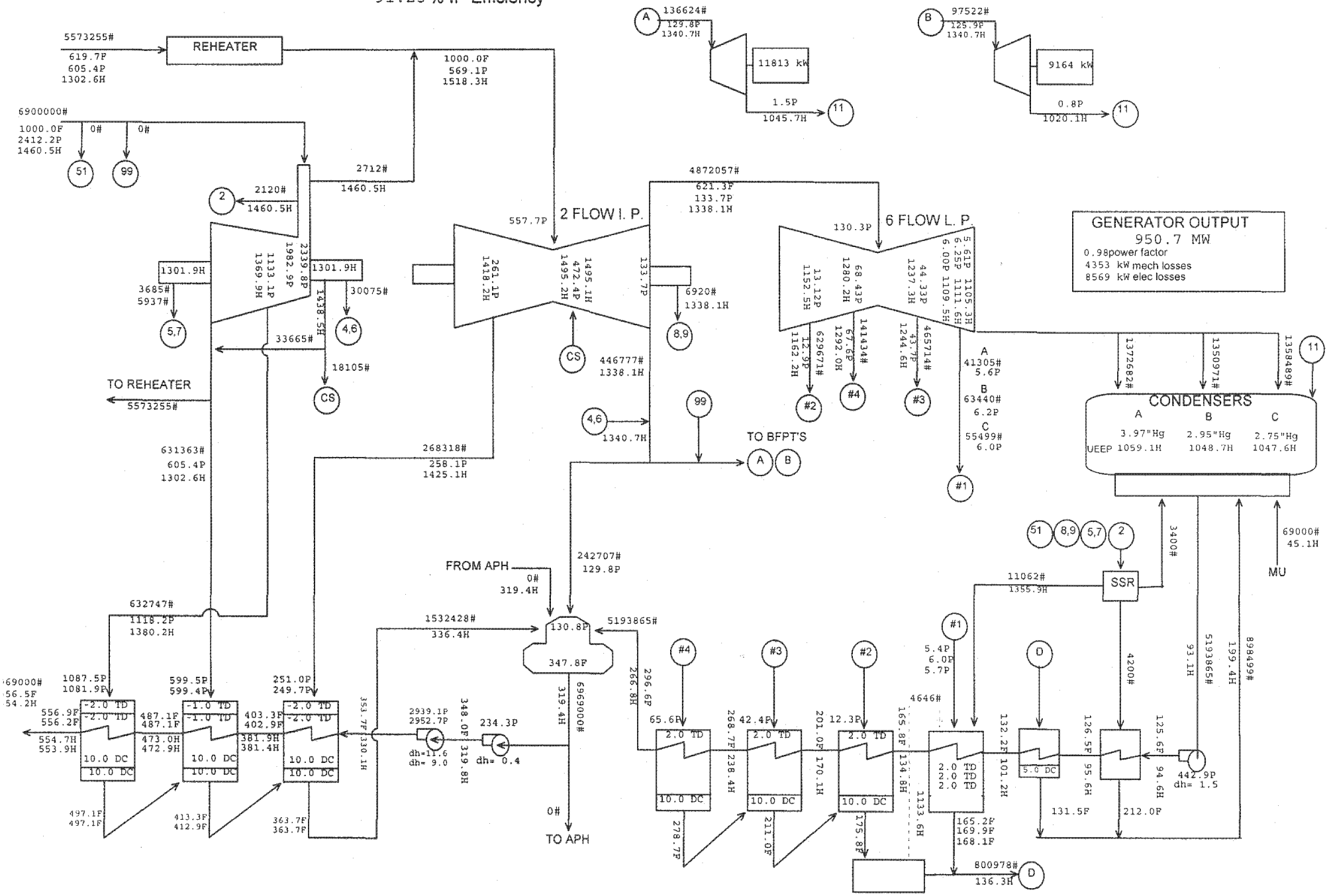

IGS - Unit 1 Operating Heat Balance @ 6,900 kpph, 93% HP Eff

IP7010530