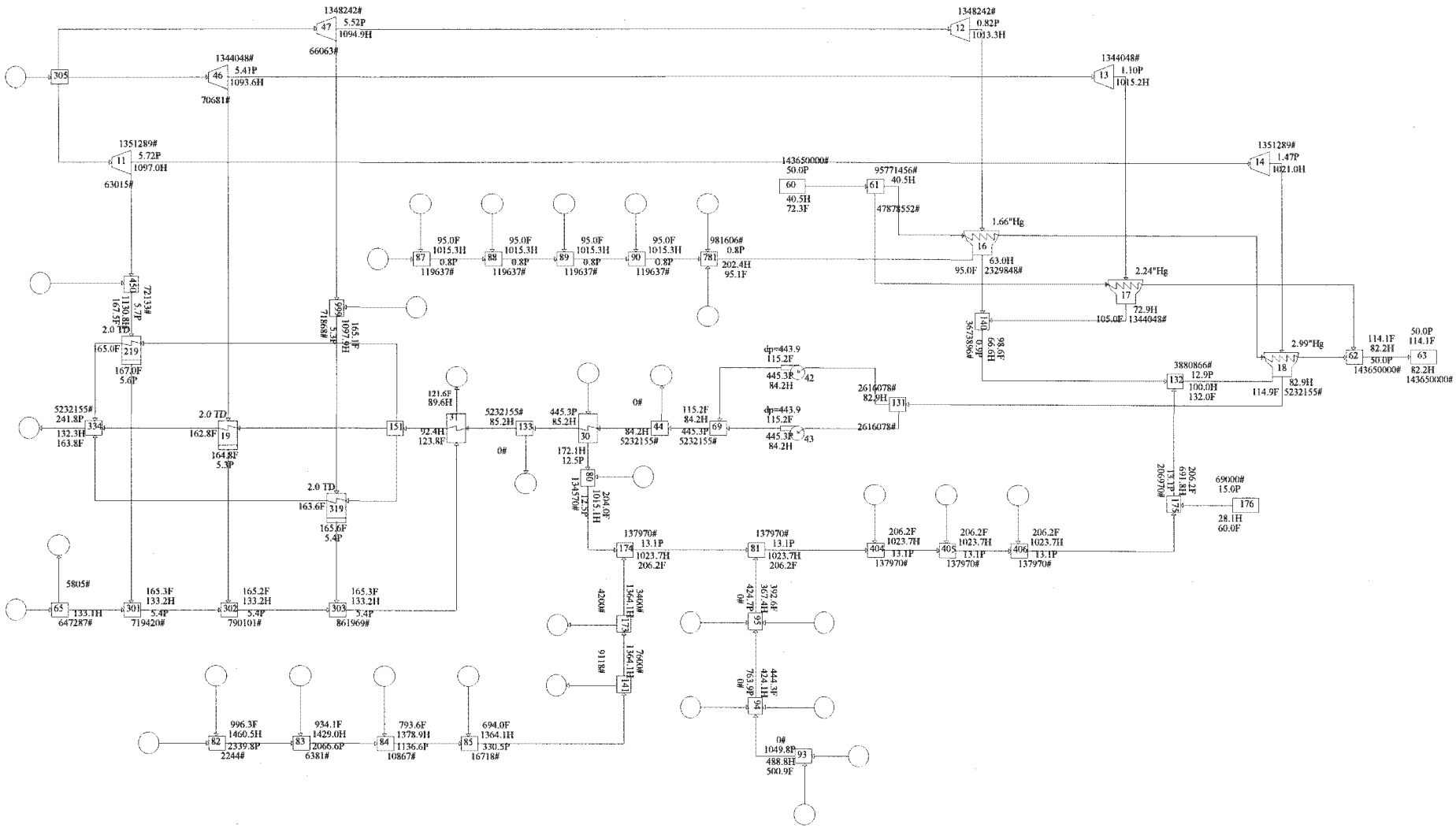

HP Turbine efficiency upgrade step

02/27/01 988.7 MW

7574.9 NTCHR 6900000# Throttle Flow

92.20 HP Efficiency 91.53 IP Efficiency

IP7010472