Submittal
#V 6-10-82

481 HB 784

FOR STUDY PURPOSES ONLY

TURBINE AND EXTRACTION ARRANGEMENT IS SCHEMATIC ONLY

CALCULATED DATA NOT GUARANTEED

RATING FLOW IS 5831171. M AT INLET STEAM CONDITIONS OF 2412.2 PSIA AND 1000.0 T
TO ASSURE THAT THE TURBINE WILL PASS THIS FLOW CONSIDERING VARIATIONS IN FLOW COEFFICIENTS FROM EXPECTED VALUES, SHOP TOLERANCES ON DRAWING AREAS, ETC. WHICH MAY AFFECT THE FLOW THE TURBINE IS BEING DESIGNED FOR A DESIGN FLOW (RATING FLOW PLUS 5.0 PERCENT) OF 6122730. M
THE EQUIVALENT DESIGN FLOW AT 2532.2 PSIA AND 1000.0 T IS 6449000 M
THE VALUE OF GENERATOR OUTPUT SHOWN ON THIS HEAT BALANCE IS AFTER ALL POWER FOR EXCITATION AND OTHER TURBINE-GENERATOR AUXILIARIES HAS BEEN DEDUCTED.

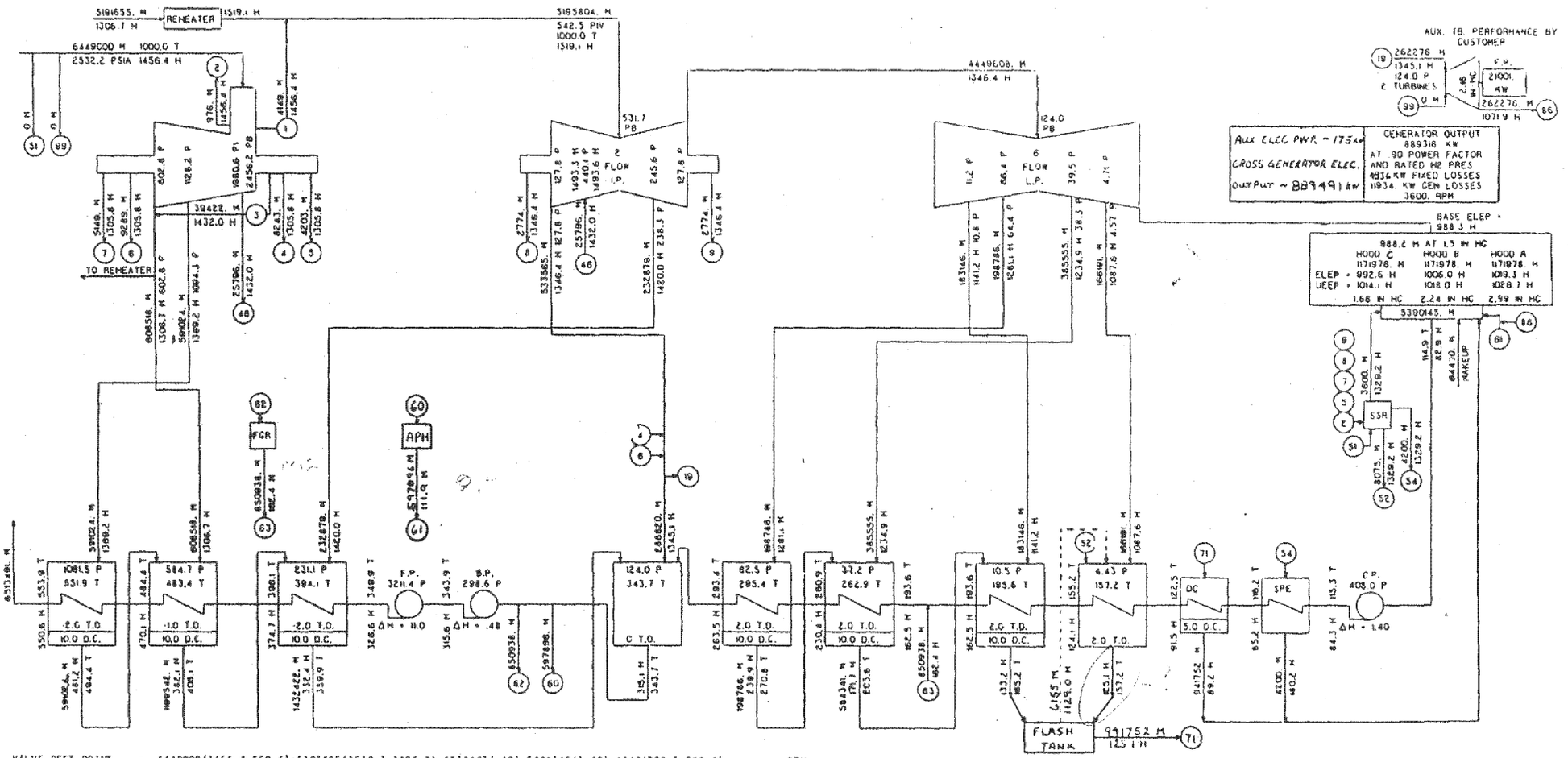

VALVE BEST POINT NET HEAT RATE (CUSTOMER'S DEFINITION) $= \frac{6449000(1456.4-550.6)+5191655(1519.1-1306.7)+6513491(.48)+5390145(1.40)+6449(720.5-550.6)}{889316} = 7821.7 \frac{BTU}{KW\text{-}HR}$

LEGEND - CALCULATIONS BASED ON 1967 ASME STEAM TABLES
M - FLOW-LB/HR
P - PRESSURE-PSIA
H - ENTHALPY-BTU/LB
T - TEMPERATURE-F DEGREES

TC6F 70.0 IN LSB 3600 RPM
2400.0 PSIA 1000. / 1000 T
GEN- 991000. KVA 90 PF LIQ

Kirk K Mayer

GENERAL ELECTRIC COMPANY, SCHENECTADY N.Y.

481 HB 784

8/10/82

IP7010304

486 HB 249

TURBINE AND EXTRACTION ARRANGEMENT IS SCHEMATIC ONLY

CALCULATED DATA - NOT GUARANTEED

RATING FLOW IS 5831171 M AT INLET STEAM CONDITIONS OF 2412.2 PSIA AND 1000.0 T TO ASSURE THAT THE TURBINE WILL PASS THIS FLOW, CONSIDERING VARIATIONS IN FLOW COEFFICIENTS FROM EXPECTED VALUES, SHOP TOLERANCES ON DRAWING AREAS, ETC. WHICH MAY AFFECT THE FLOW, THE TURBINE IS BEING DESIGNED FOR A DESIGN FLOW (RATING FLOW PLUS 5.0 PERCENT) OF 6122730 M

THE VALUE OF GENERATOR OUTPUT SHOWN ON THIS HEAT BALANCE IS AFTER ALL POWER FOR EXCITATION AND OTHER TURBINE-GENERATOR AUXILIARIES HAS BEEN DEDUCTED.

FOR STUDY PURPOSES ONLY

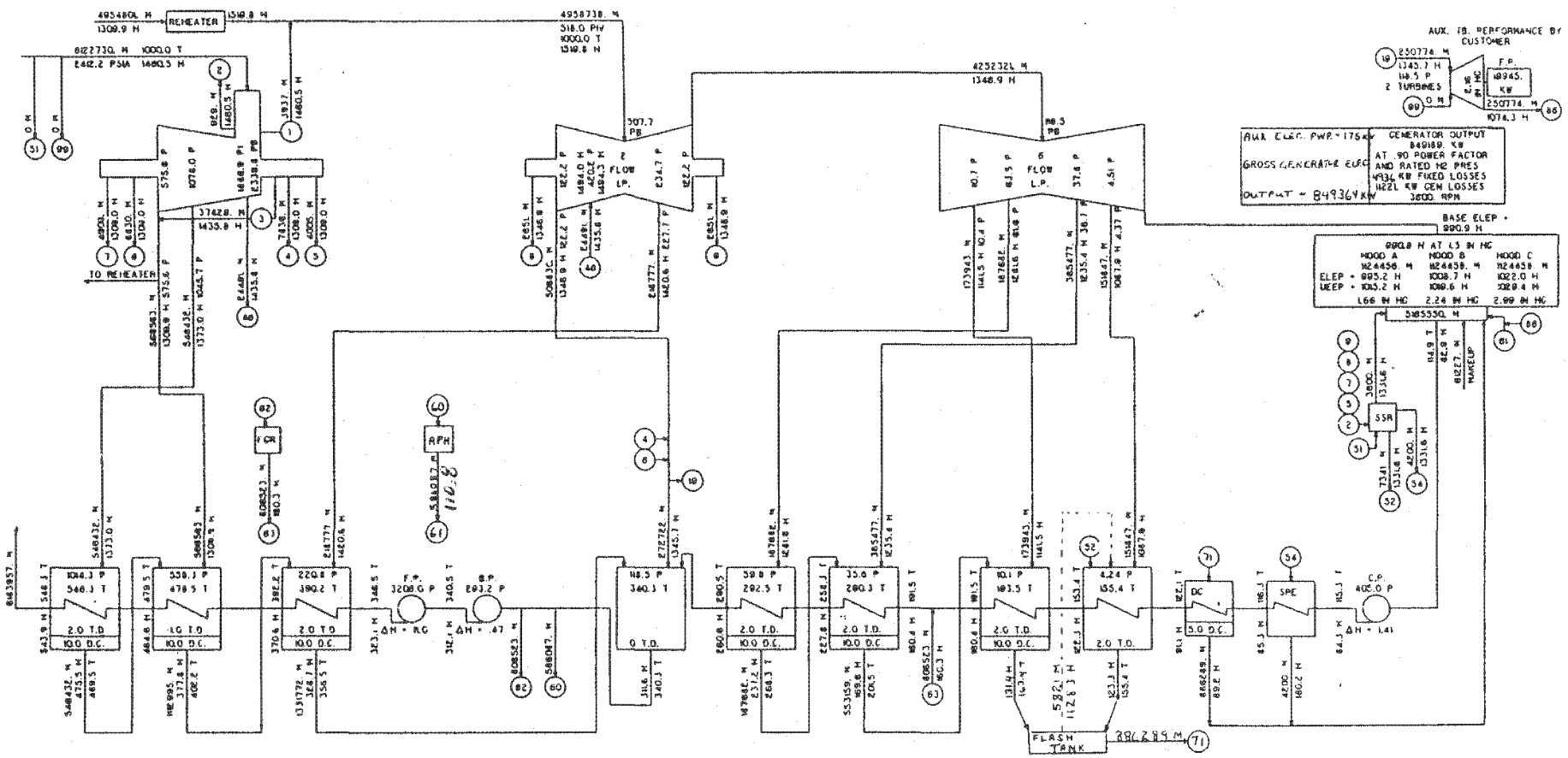

VALVE BEST POINT NET HEAT RATE (CUSTOMER'S DEFINITION)

$$= \frac{+6183957(.47)+6165550(1.41)+6123(720.5-543.9)}{\frac{6122730(1460.5-543.9)+495480(1519.8-1309.9)}{849189}} = 7846.8 \ \frac{BTU}{KW\text{-}HR}$$

LEGEND - CALCULATIONS BASED ON 1967 ASME STEAM TABLES
M - FLOW-LB/HR
P - PRESSURE-PSIA
H - ENTHALPY-BTU/LB
T - TEMPERATURE-F DEGREES

307ET 1 0 8

TC6F 30.0 IN. LSB 3600 RPM
2400.0 PSIA 1000 / 1000. T
GEN- 991000. KVA .90 PF LIQ

K.K. Majoy
10/24/82

GENERAL ELECTRIC COMPANY, SCHENECTADY N.Y.

486 HB 249

IP7010305

481 HB 785

FOR STUDY PURPOSES ONLY

TURBINE AND EXTRACTION ARRANGEMENT IS SCHEMATIC ONLY

THE VALUE OF GENERATOR OUTPUT SHOWN ON THIS HEAT BALANCE IS AFTER ALL POWER FOR EXCITATION AND OTHER TURBINE-GENERATOR AUXILIARIES HAS BEEN DEDUCTED.

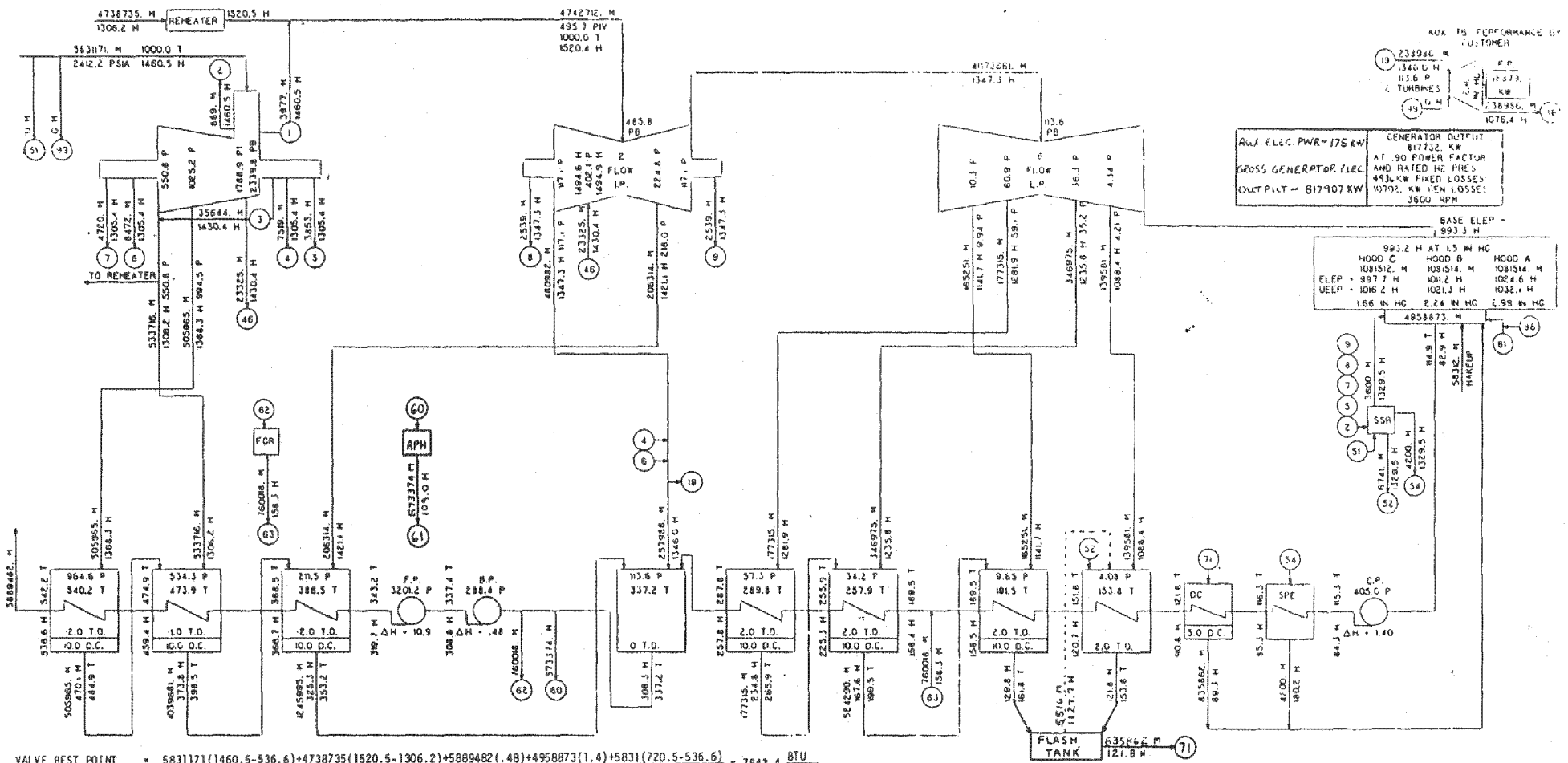

VALVE BEST POINT NET HEAT RATE (CUSTOMER'S DEFINITION) $= \frac{5831171(1460.5-536.6)+4738735(1520.5-1306.2)+5889482(.48)+4958873(1.4)+5831(720.5-536.6)}{817732} = 7843.4 \frac{BTU}{KW\text{-}HR}$

LEGEND - CALCULATIONS BASED ON 1967 ASME STEAM TABLES
M - FLOW-LB/HR
P - PRESSURE-PSIA
H - ENTHALPY BTU/LB
T - TEMPERATURE-F DEGREES

TOGF 30.0 IN. LSB 3600 RPM
2400.0 PSIA 1000. / 1000. T
GEN 991000. KVA 90 PF LIQ

Karl K. Majoy

GENERAL ELECTRIC COMPANY SCHENECTADY N.Y.

481 HB 785 6/10/82

IP7010306

481 HB 786

FOR STUDY PURPOSES ONLY

TURBINE AND EXTRACTION ARRANGEMENT IS SCHEMATIC ONLY

CALCULATED DATA - NOT GUARANTEED

RATING FLOW IS 583871. M AT INLET STEAM CONDITIONS OF 2412.2 PSIA AND 1000.0 T
TO ASSURE THAT THE TURBINE WILL PASS THIS FLOW CONSIDERING VARIATIONS IN FLOW COEFFICIENTS FROM EXPECTED VALUES, SHOP TOLERANCES ON DRAWING AREA, ETC. WHICH MAY AFFECT THE FLOW, THE TURBINE IS BEING DESIGNED FOR A DESIGN FLOW RATING FLOW PLUS 5.0 PERCENT OF 612273.0 M
THE VALUE OF GENERATOR OUTPUT SHOWN ON THIS HEAT BALANCE IS AFTER ALL POWER FOR EXCITATION AND OTHER TURBINE-GENERATOR AUXILIARIES HAS BEEN DEDUCTED

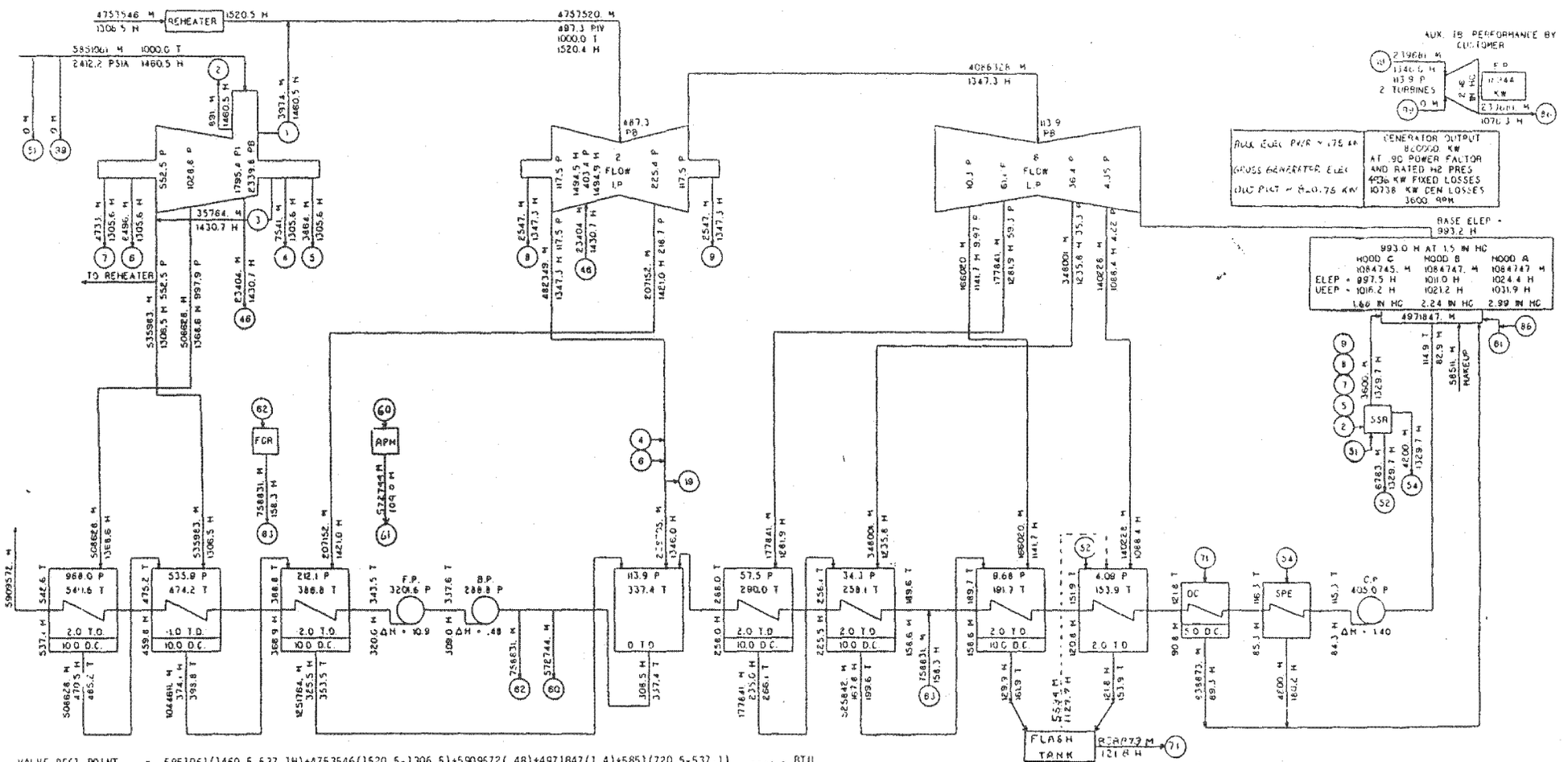

VALVE BEST POINT NET HEAT RATE (CUSTOMER'S DEFINITION) $= \frac{5851061(1460.5-537.1H)+4753546(1520.5-1306.5)+5909572(.48)+4971847(1.4)+5851(720.5-537.1)}{820000} = 7842.7 \frac{BTU}{KW\text{-}HR}$

93.51 %

LEGEND CALCULATIONS BASED ON 1967 ASME STEAM TABLES
M - FLOW LB/HR
P - PRESSURE-PSIA
H - ENTHALPY-BTU/LB
T - TEMPERATURE-F DEGREES

TCRF 30.0 IN LSB 3600 RPM
2400.0 PSIA 1000. / 1000. T
CEN 911000. KVA 90 PF LIQ

74KT 1 0 4

Rand K Mayoy

GENERAL ELECTRIC COMPANY, SCHENECTADY N.Y.

481 HB 786

C/10/82

IP7010307

TURBINE AND EXTRACTION ARRANGEMENT - SCHEMATIC ONLY

FOR STUDY PURPOSES ONLY

THE VALUE OF GENERATOR OUTPUT SHOWN ON THIS HEAT BALANCE IS AFTER ALL POWER FOR EXCITATION AND OTHER TURBINE-GENERATOR AUXILIARIES HAS BEEN DEDUCTED

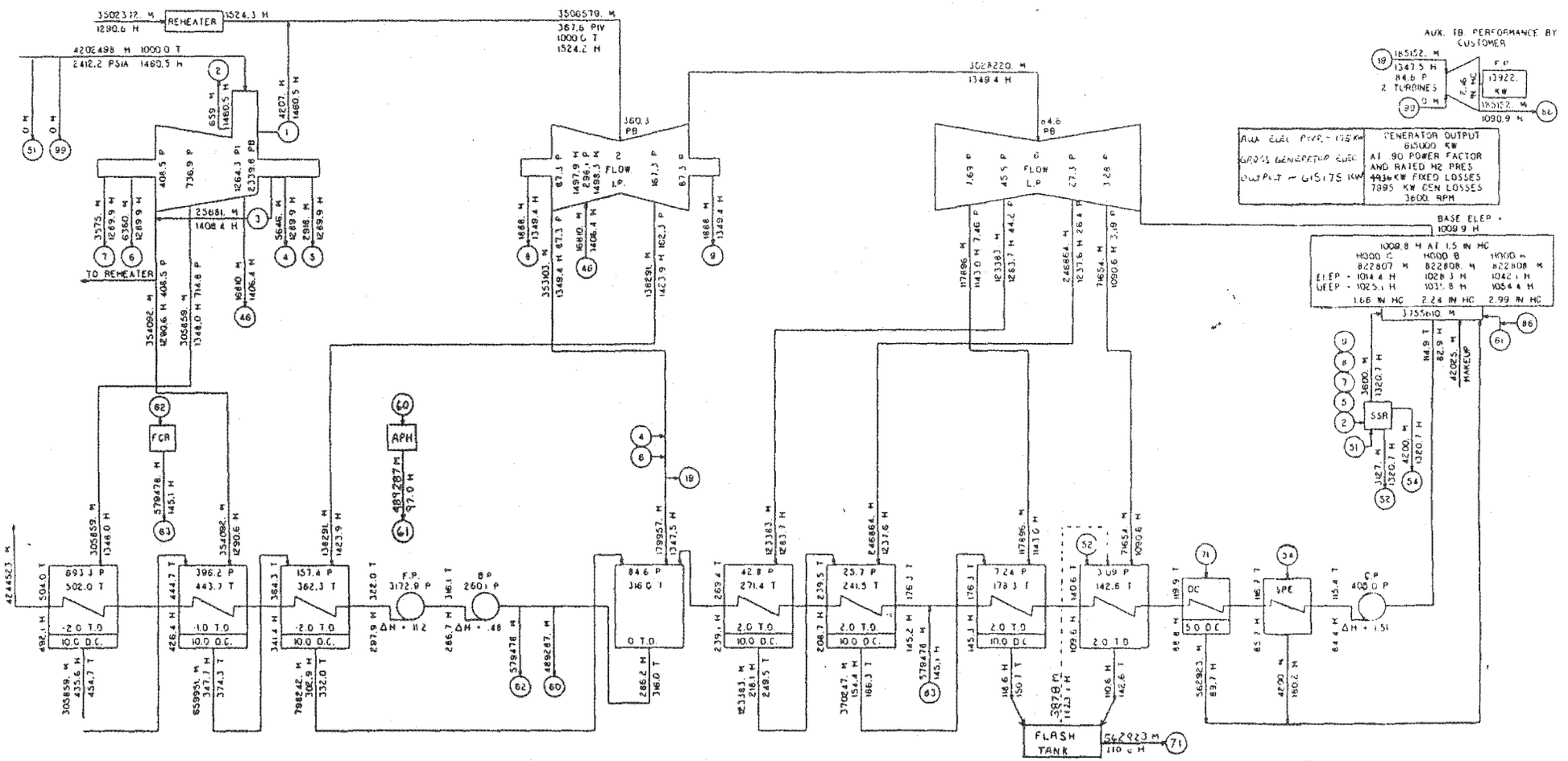

VALVE BEST POINT NET HEAT RATE (CUSTOMER'S DEFINITION)

$$= \frac{4202498(1460.5-492.1)+3502372(1524.3-1290.6)+4244523(.48)+3755610(1.51)+4202(720.5-492.1)}{615000} = 7962.4 \ \frac{BTU}{KW\text{-}HR}$$

LEGEND CALCULATIONS BASED ON 1967 ASME STEAM TABLES
M - FLOW-LB/HR
P - PRESSURE-PSIA
H - ENTHALPY-BTU/LB
T - TEMPERATURE-F DEGREES

74KT 1 0 5

T(6F 30.0 IN. LSB 3600 RPM
2400.0 PSIA 1000. / 1000. T
GEN: 991000 KVA 90 PF LIQ

IP7010308

481 HB 788

TURBINE AND EXTRACTION ARRANGEMENT IS SCHEMATIC ONLY

THE VALUE OF GENERATOR OUTPUT SHOWN ON THIS HEAT BALANCE IS AFTER ALL POWER FOR EXCITATION AND OTHER TURBINE-GENERATOR AUXILIARIES HAS BEEN DEDUCTED.

FOR STUDY PURPOSES ONLY

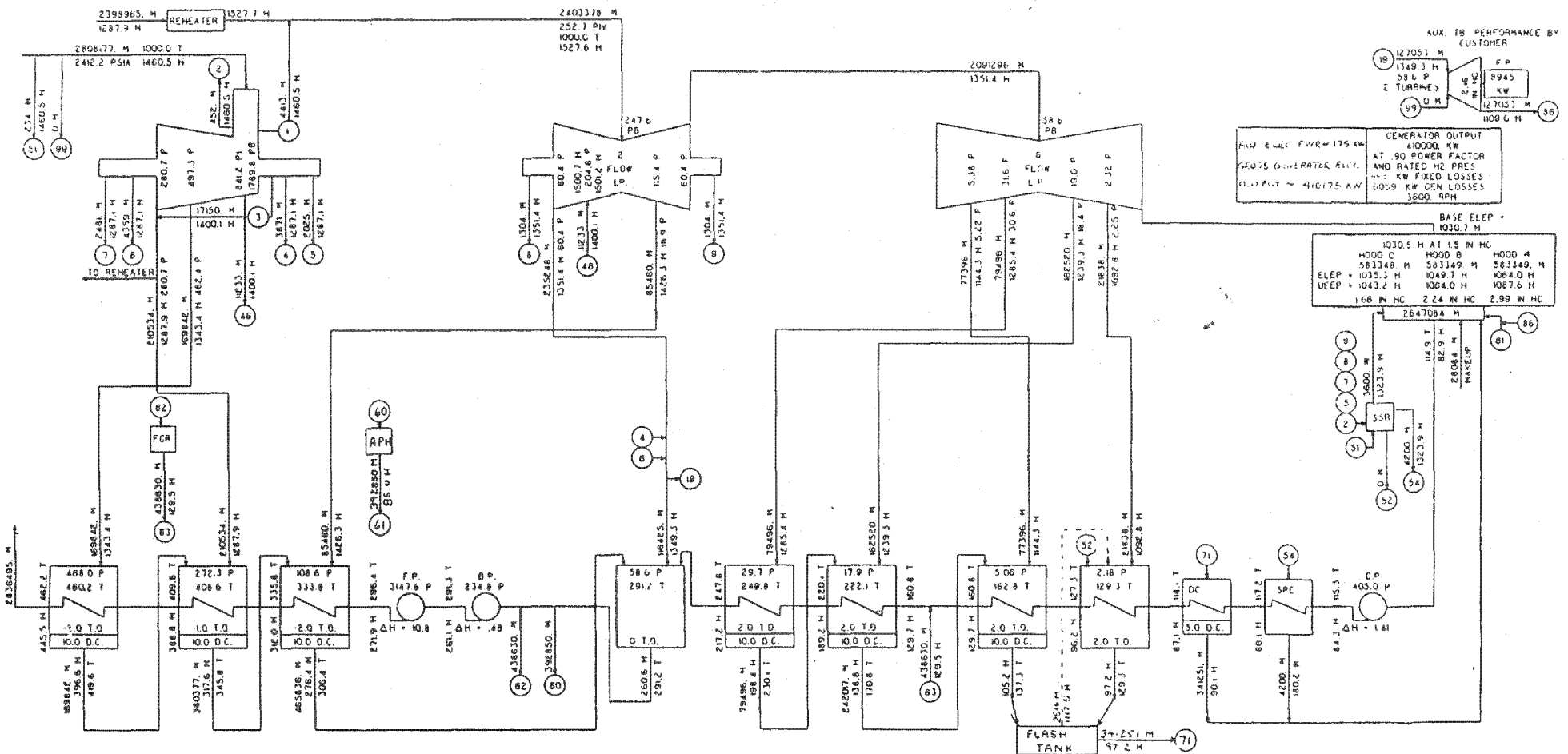

VALVE BEST POINT NET HEAT RATE (CUSTOMER'S DEFINITION) $= \frac{2808177(1460.5-445.5)2398965(1527.7-1287.9)+2836495(.48)+2647084(1.41)+2808(720.5-445.5)}{410000} = 8369.4 \frac{BTU}{KW\text{-}HR}$

LEGEND - CALCULATIONS BASED ON 1967 ASME STEAM TABLES
M - FLOW-LB/HR
P - PRESSURE-PSIA
H - ENTHALPY-BTU/LB
T - TEMPERATURE-F DEGREES

741KT 1 0 6

TC6F 30.0 IN. LSB 3600 RPM
2400.0 PSIA 1000. / 1000. T
GEN: 991000. KVA 90 PF LIQ

GENERAL ELECTRIC COMPANY, SCHENECTADY N.Y.

481 HB 788

6/10/82

50%

IP7010309

481 HB 789

FOR STUDY PURPOSES ONLY

TURBINE AND EXTRACTION ARRANGEMENT IS SCHEMATIC ONLY

THE VALUE OF GENERATOR OUTPUT SHOWN ON THIS HEAT BALANCE IS AFTER ALL POWER FOR EXCITATION AND OTHER TURBINE GENERATOR AUXILIARIES HAS BEEN DEDUCTED.

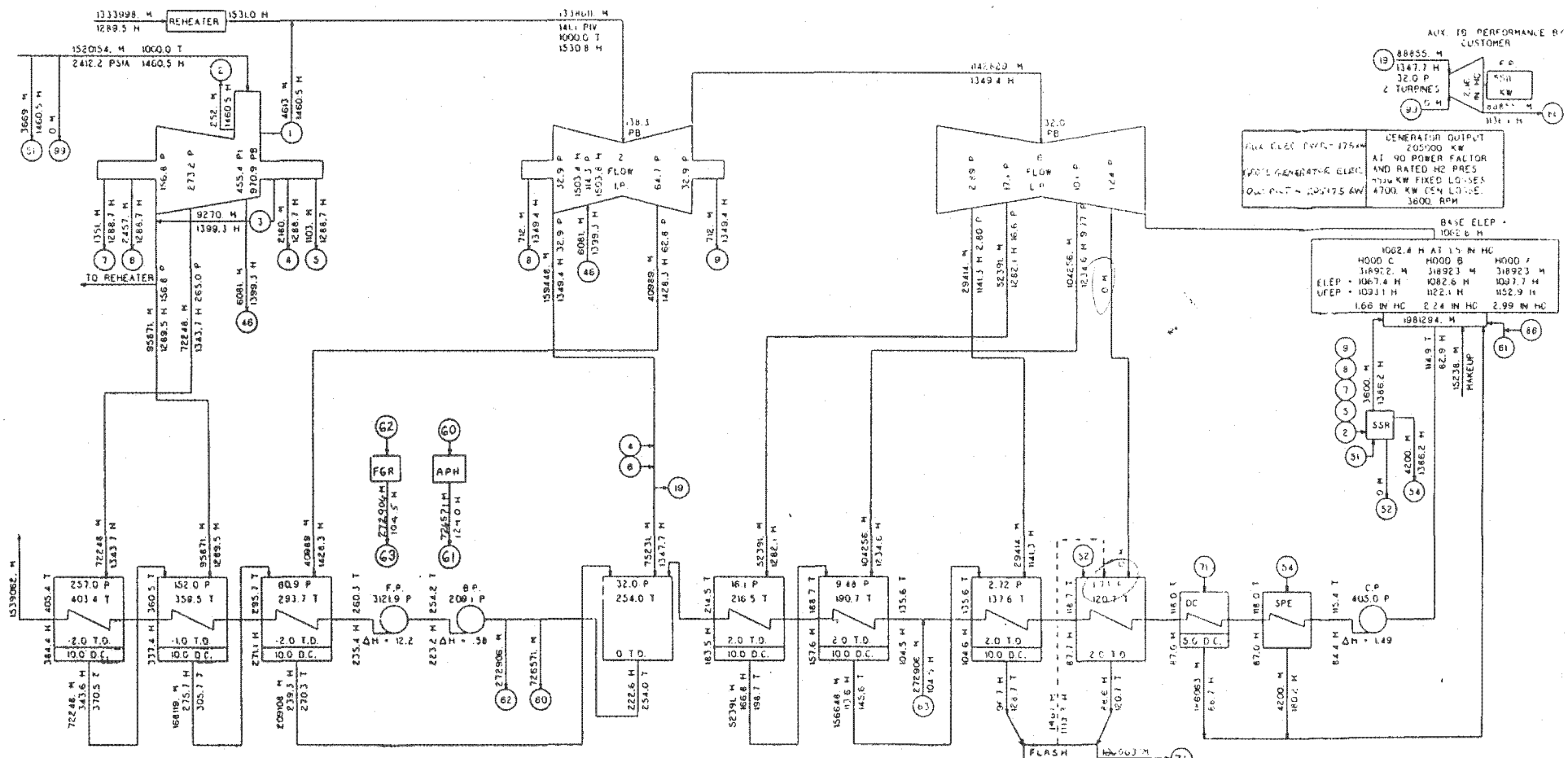

VALVE BEST POINT NET HEAT RATE (CUSTOMER'S DEFINITION)

$$= \frac{1520154(1460.5-384.4)+1333998(1531.0-1289.5)+1539062(.58)+1981294(1.49)+1520(720.5-384.4)}{205000} = 9572.5 \ \frac{BTU}{KW\text{-}HR}$$

LEGEND CALCULATIONS BASED ON 1967 ASME STEAM TABLES
M - FLOW LB/HR
P - PRESSURE PSIA
H - ENTHALPY BTU/LB
T - TEMPERATURE F DEGREES

TC6F 30.0 IN LSB 3600 RPM
2400.0 PSIA 1000 / 1000 T
GEN- 991000 KVA 90 PF LIQ

GENERAL ELECTRIC COMPANY, SCHENECTADY N.Y.

481 HB 789

6/10/82

IP7010310