9255.62.1001.05-10222

MECH FILE COPY

RECEIVED FOR DISTRIBUTION
OCT 26 1987
BLACK & VEATCH

GENERAL ELECTRIC

264A6551 CONT ON SHEET 2 SH NO. 1

REV NO. Ø1 | 264A6551 | CONT ON SHEET 2 SH NO. 1

TITLE PERFORMANCE TEST STEAM SEAL FLOW CALCULATIONS

FIRST MADE FOR

REVISIONS

IT IS DESIRABLE TO KNOW THE STEAM SEAL FLOWS IN THE TURBINE. A CHANGE IN ANY OF THESE FLOWS CAN INDICATE A CHANGE IN CONDITION OF THE TURBINE PACKINGS, WHICH IN TURN MAY HAVE A SIGNIFICANT EFFECT ON THE PERFORMANCE OF THE TURBINE.

STEAM FLOWS IN THE STEAM SEAL SYSTEM CAN BE CALCULATED USING THE ORIFICE PLATES AND FORWARD-REVERSE TUBES IN THE STEAM SEAL PIPING.

FORWARD-REVERSE TUBES

$$Q = 1890.07\ D^2\ K\ \sqrt{\Delta P / v}$$

Q = STEAM FLOW (POUNDS PER HOUR)
D = PIPE I.D. (INCHES)
K = FLOW COEFFICIENT = .76 FOR ALL PIPE SIZES
ΔP = DIFFERENTIAL PRESSURE ACROSS FRT (PSI)
v = SPECIFIC VOLUME, DEFINED BY PRESSURE FROM LOW SIDE OF FRT AND STEAM TEMPERATURE (FT^3/LB)

ORIFICE PLATES

$$Q = 1890.07\ (D_2)^2\ KEY\ \sqrt{\frac{\Delta P}{v}}$$

Q = STEAM FLOW (POUNDS PER HOUR)
D_2 = ORIFICE BORE DIAMETER (INCHES)
K = FLOW COEFFICIENT = $\frac{C}{\sqrt{1-\beta^4}}$

C = DISCHARGE COEFFICIENT FROM "FLUID METERS" BOOK, BASED ON THROAT DIAMETER, DIAMETER RATIO AND REYNOLDS NUMBER, USING FLANGE TAPS.

β = DIAMETER RATIO = $\left[\frac{D_2}{D}\right]$

D = PIPE INSIDE DIAMETER (INCHES)

$$E = 1 + C_t\ \Delta T$$

C_t = COEFFICIENT OF THERMAL EXPANSION OF ORIFICE MATERIAL (USUALLY STAINLESS STEEL $C_t = 9 \times 10^{-6}$ in/in/°F)

ΔT = TEMPERATURE OF FLUID MINUS TEMPERATURE AT WHICH ORIFICE BORE WAS MEASURED (°F) WHICH IS 70°F FOR THOSE THAT ARE SUPPLIED.

Y = EMPIRICAL EXPANSION FACTOR.

THIS DOCUMENT INCLUDES INFORMATION IT CONTAINS PROPRIETARY AND CONFIDENTIAL INFORMATION OF GENERAL ELECTRIC COMPANY. IT IS MADE AVAILABLE SOLELY TO RESPOND TO A REQUEST FOR QUOTATION OR PROPOSAL. ALL INFORMATION CONTAINED IN THIS DOCUMENT IS TO BE KEPT STRICTLY CONFIDENTIAL AND NOT DISCLOSED OR DISTRIBUTED TO ANYONE OUTSIDE YOUR ORGANIZATION. THIS DOCUMENT STILL TO BE RETURNED TO THE ISSUING GE COMPANY UPON REQUEST.

1 UPPAL 1/23/90 SEE SH. #2.

273-240
273-41
PRINTS TO

MADE BY B. BROWN 1/23/75 | APPROVALS KW | TURBINE DIV OR DEPT. | SCHENECTADY LOCATION | 264A6551 CONT ON SHEET 2 SH NO. 1

ISSUED JAN 22 1975

TB D8 | CODE IDENT NO. 270

9255.62.1001.05-10222

GENERAL ELECTRIC

264A6551 CONT ON SHEET SH NO. 2

REV NO. Ø1 | 264A6551 | CONT ON SHEET SH NO. 2

TITLE PERFORMANCE TEST STEAM SEAL FLOW CAUCULATIONS

FIRST MADE FOR

REVISIONS

$$Y = 1 - (.41 + .35\ \beta^4)\ \frac{\Delta P}{P_1 \gamma}$$

ΔP = DIFFERENTIAL PRESSURE ACROSS ORIFICE (PSI)
P_1 = STATIC PRESSURE AT ORIFICE INLET (PSIA)
γ = SPECIFIC HEAT RATIO (APPROXIMATELY 1.3 FOR STEAM)

V = STEAM SPECIFIC VOLUME AT TEMPERATURE AND PRESSURE AT INLET OF ORIFICE.

1 UPPAL 1/23/90 REVISED ΔP & P_1.

273-240
273-41
PRINTS TO

MADE BY B. BROWN 1/23/75 | APPROVALS KW | TURBINE DIV OR DEPT. | SCHENECTADY LOCATION | 264A6551 CONT ON SHEET SH NO. 2

ISSUED JAN 22 1975

TB D8 | CODE IDENT NO. 270

IP7010039

INTERMOUNTAIN POWER CO.

Unit No. 2 T 151

No. 1 Packing HPLO

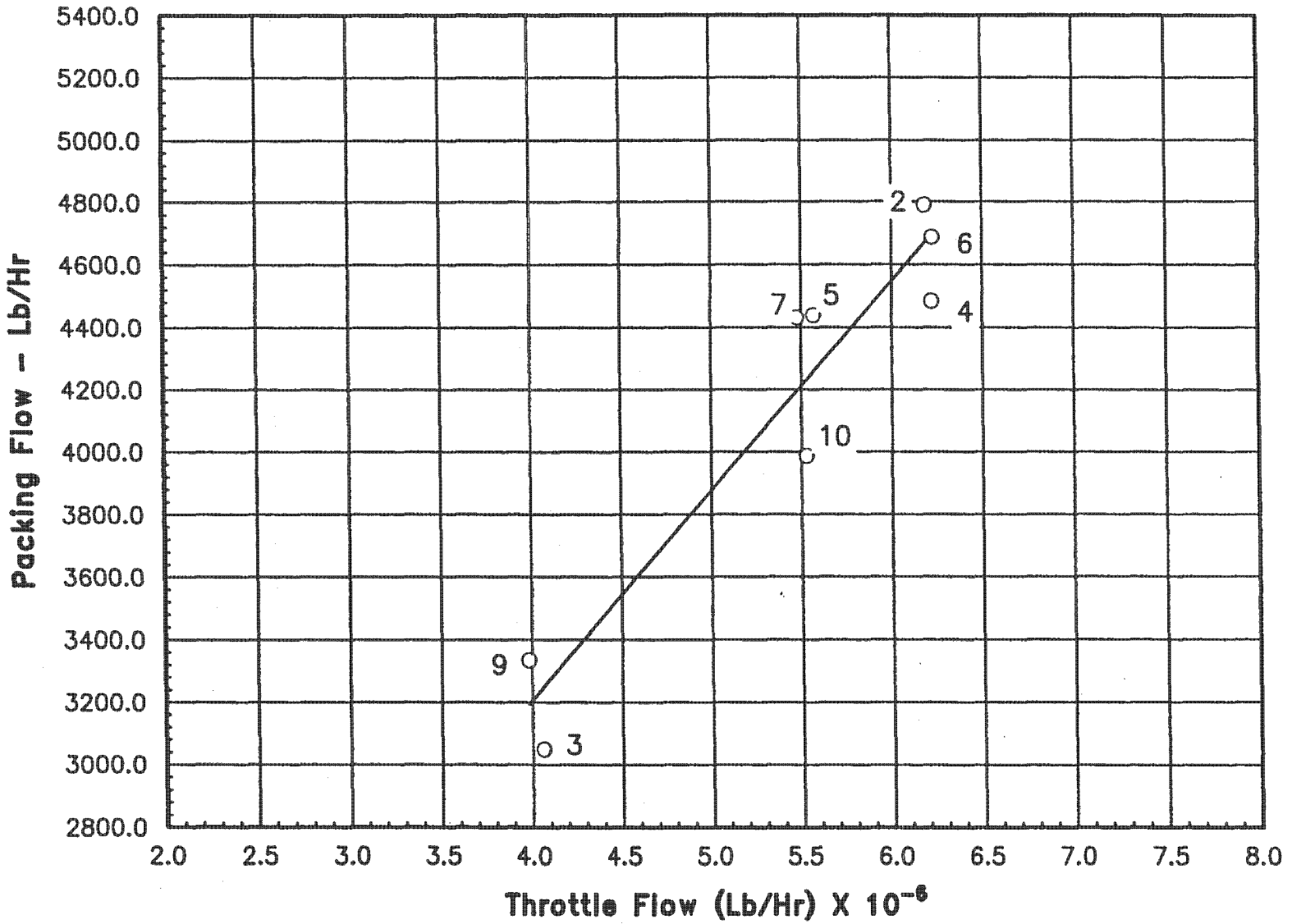

Figure 29

Fig. 29

IP7010040

INTERMOUNTAIN POWER CO.

Unit No. 2 T 151

No. 2 Packing HPLO

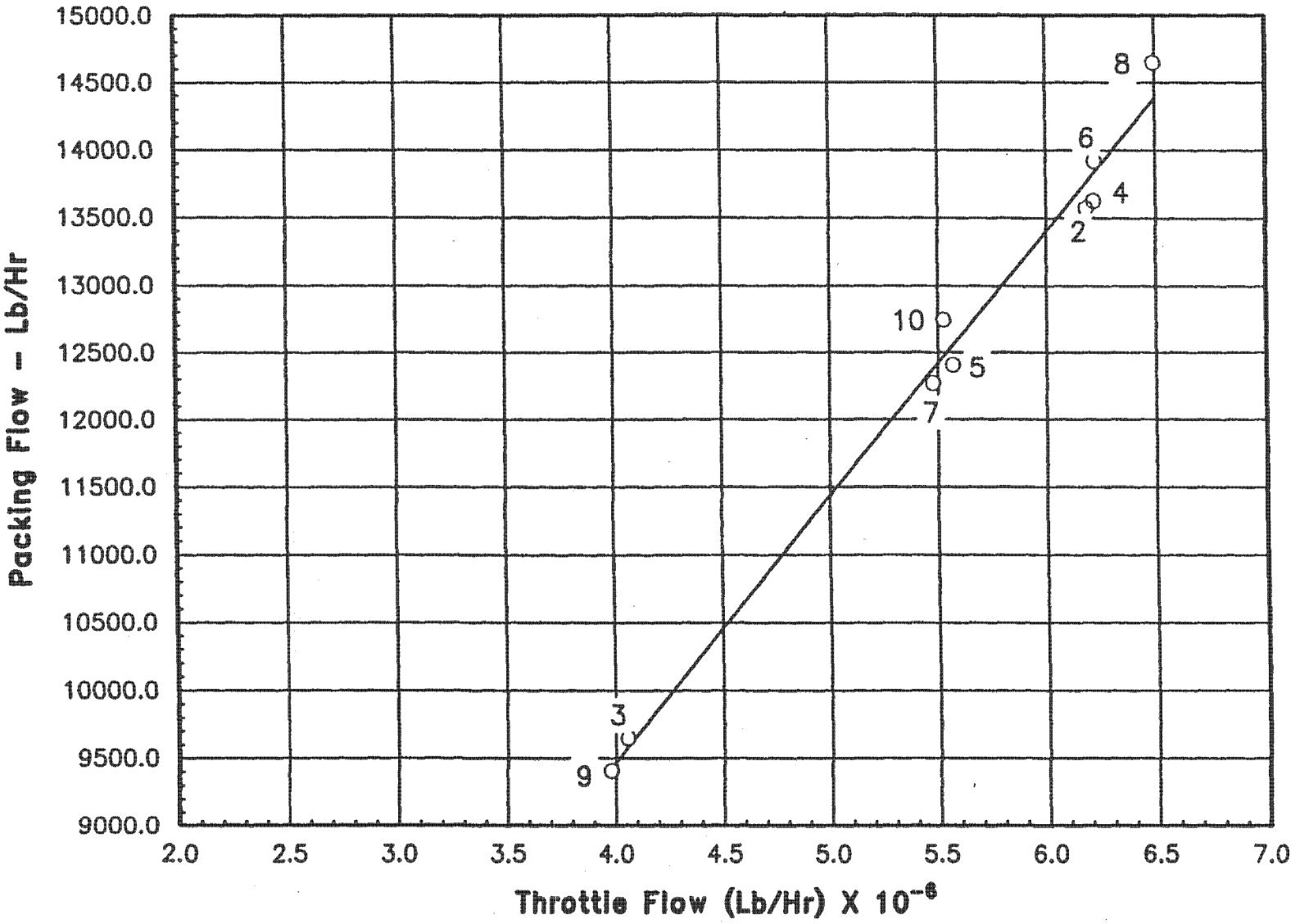

Fig. 30

IP7010041

Figure 30

INTERMOUNTAIN POWER CO.

Unit No. 2 T 151

No. 1 Packing LPLO

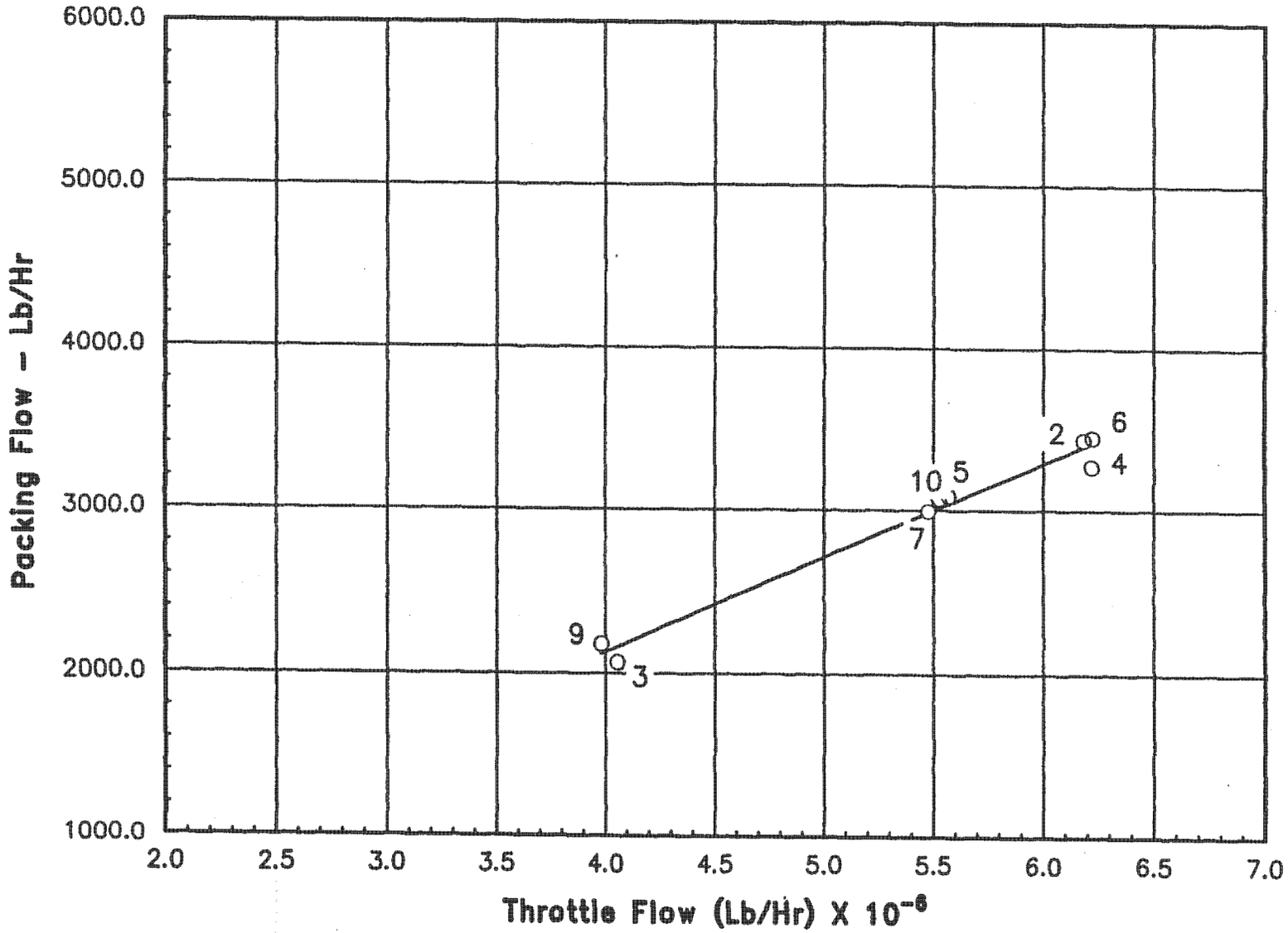

Figure 31

Fig. 31

IP7010042

INTERMOUNTAIN POWER CO.

Unit No. 2 T 151

No. 2 Packing LPLO

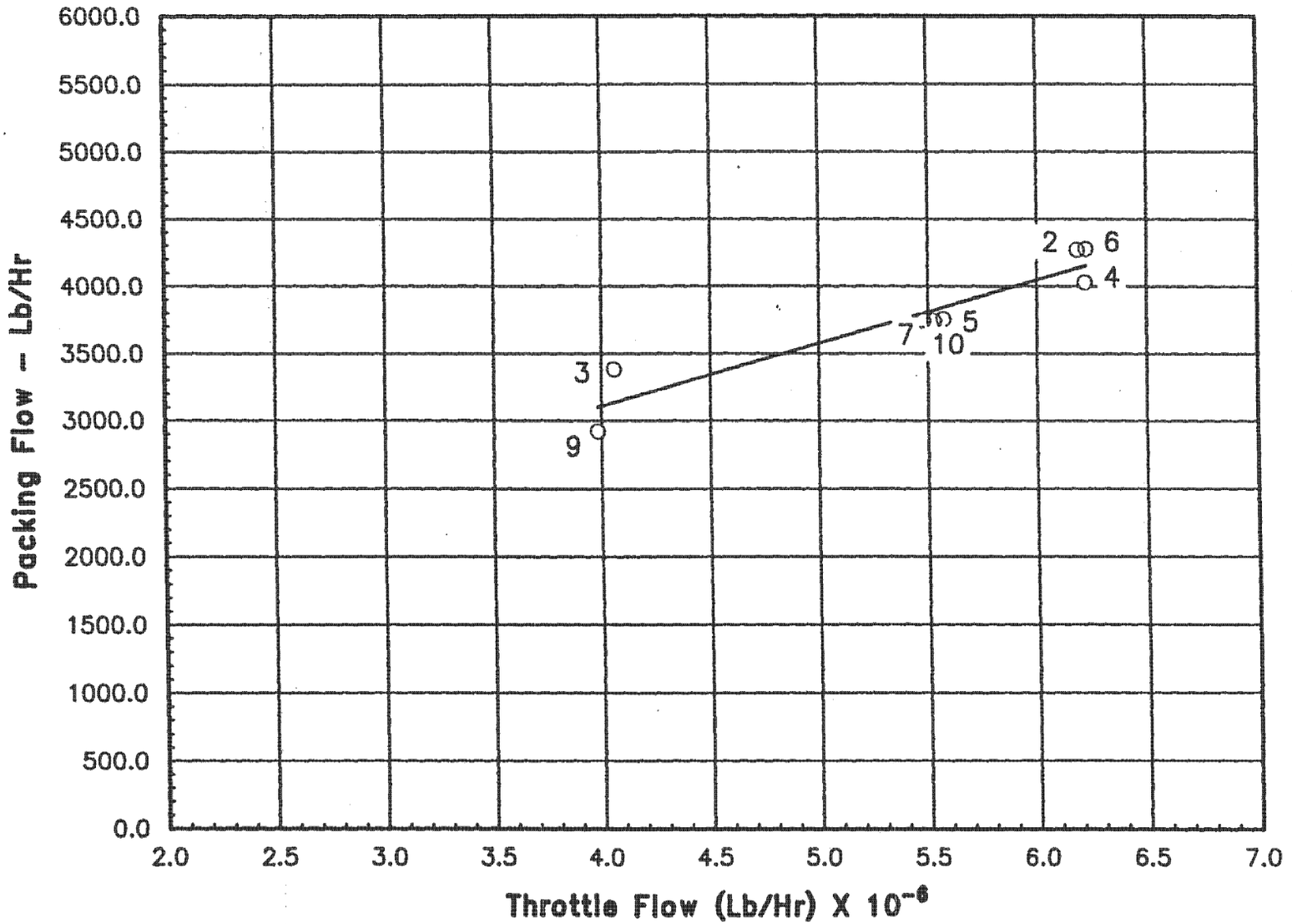

Figure 32

Fig. 32

IP7010043

INTERMOUNTAIN POWER CO.

Unit No. 2 T 151

No. 3 Packing LPLO

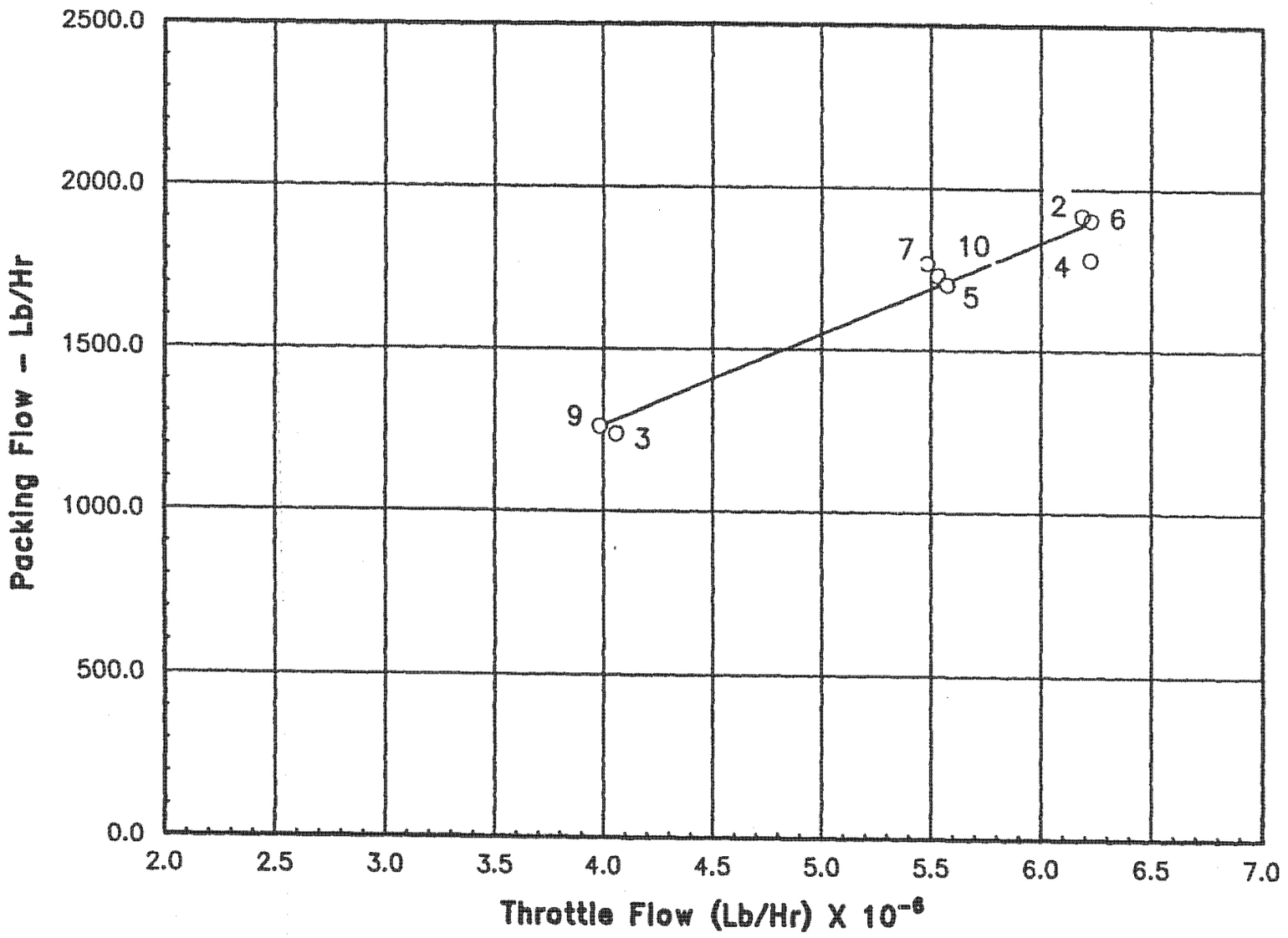

Fig. 33

IP7010044

Figure 33

INTERMOUNTAIN POWER CO.

Unit No. 2 T 151

No. 4 Packing LPLO

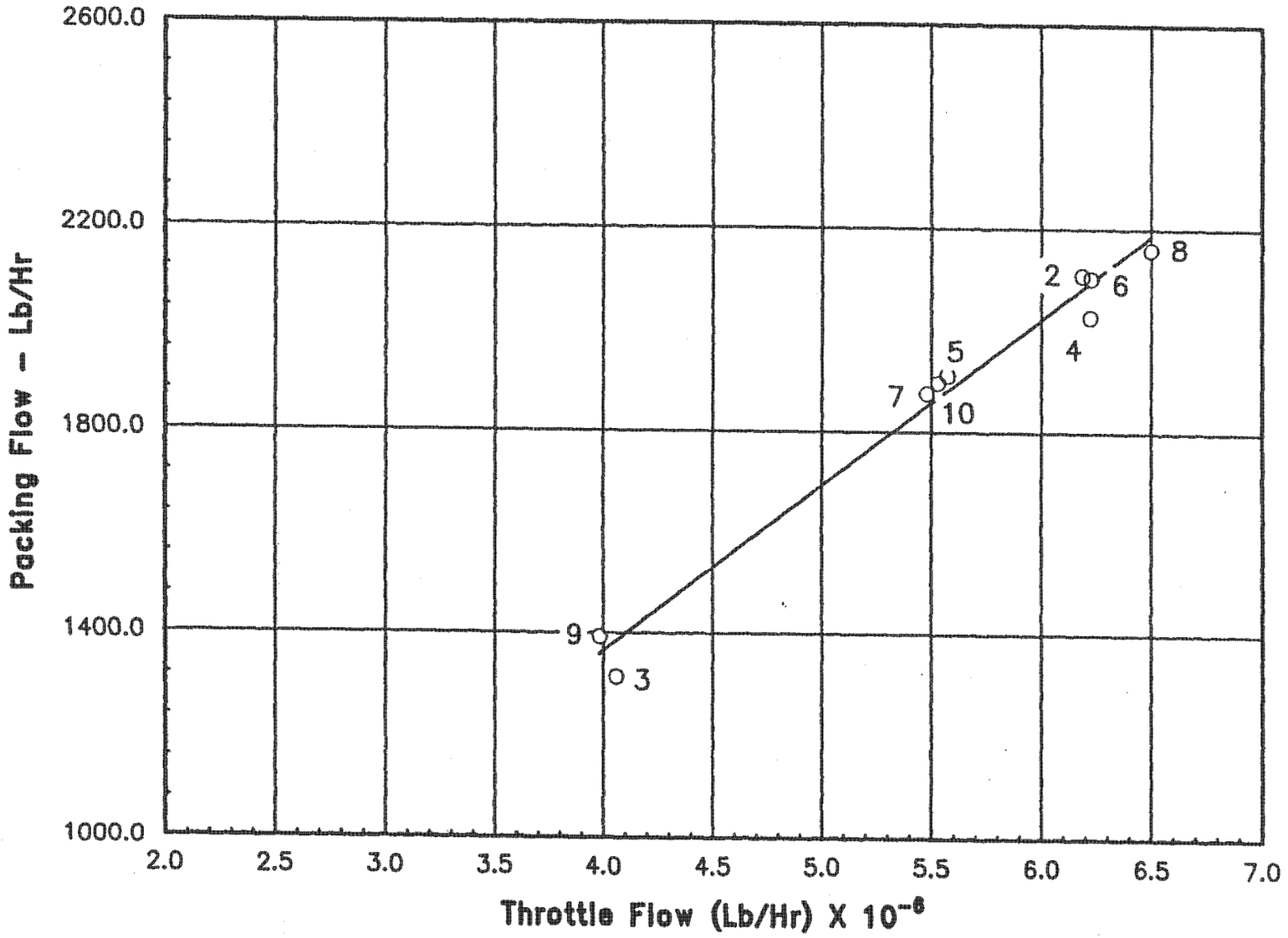

Figure 34

Fig. 34

IP7010045

B&V 9255.62.1001.06-10045

MECH FILE COPY

INTERMOUNTAIN POWER PROJECT
TURBINE-GENERATOR UNITS 1 thru 4
IPA CONTRACT 2000N
B&V PROJECT 9255.61.1001
GE TB-GEN 270T150 thru 270T153
GE CONTRACT NO. 90527

RECEIVED FOR DISTRIBUTION
JAN 4 1982
BLACK & VEATCH

THERMAL KIT

TABLE OF CONTENTS

Description	Curve Number
Gland Leakages and Mechanical Losses	481 HB 471
First Stage Shell Pressure	481 HA 472
Expansion Lines	481 HD 473
Notes for Expansion Lines	371 HA 416
Extraction State Shell Pressure	481 HB 474
Exhaust Pressure Correction Factors	481 HB 475
Net Heat Rate	452 HB 890
Generator Losses	452 HB 891
HP Turbine Internal Efficiency	452 HB 892
Reheat Turbine Internal Efficiency	452 HB 893
HP Expansion Line End Point	452 HB 894
Reheat Expansion Line End Point	452 HB 895
Exhaust Loss Curve	476 HB 902
Correction to Expansion Line End Points for Exhaust Pressure	GEZ-3589
Moisture Correction Factors	GEZ-5834
Initial Pressure Correction	GEZ-3614
Initial Temperature Correction	GEZ-3615
Reheat Temperature Correction	GEZ-3617
Reheat Pressure Drop Correction	GEZ-3618

IP7010046

820,000 KW 1.66/2.24/2.99 IN. HG. ABS. 1.0 PCT MU
TC6F-30.0 IN. LSB 3600 RPM
2400 PSIG 1000/1000F

GLAND LEAKAGES AND MECHANICAL LOSSES

TO DETERMINE THE LEAKAGE FLOW IN #/HR., MULTIPLY THE FOLLOWING PACKING CONSTANTS BY THE $\sqrt{P/V}$ (AHEAD OF THE LEAKAGE). THE LEAKAGE THROUGH THE FIRST PACKING IN A SERIES WILL BE THE SUM OF THE FLOWS TO THE PACKING LEAKOFFS FOLLOWING IT.

REFER TO HEAT BALANCE DIAGRAM 481 HB 111 FOR IDENTIFICATION OF LEAKAGES.

LEAKAGE NO.	1&2	2	3	4&5	5	6&7	7	8	9
PACKING CONSTANT	56	50	540	500	800	580	980	550	550

WHEN EXPANSION LINES FROM 481 HD 473 OR EXPANSION LINE END POINTS FROM 452 HB 894, 895 ARE USED IN HEAT BALANCE CALCULATIONS, THE LEAKAGES SHOWN ON THIS SHEET MUST BE USED IN THE FEEDWATER HEATING CYCLE.

THE 1ST OF 2 LEAKAGES CAN BE DETERMINED BY SUBTRACTING THE 2ND LEAKAGE FROM THE SUM OF BOTH LEAKAGES AND THE PRESSURE AHEAD OF THE 2ND LEAKAGE IS THE EXTRACTION STAGE PRESSURE TO WHICH THE 1ST OF THE 2 LEAKAGES CONNECTS INTO.

USE THROTTLE ENTHALPY FOR LEAKAGES 1 AND 2.

USE HIGH PRESSURE TURBINE EXHAUST ENTHALPY FOR LEAKAGES 4, 5, 6 & 7.

ENTHALPY FOR LEAKAGE 8 AND 9 CAN BE DETERMINED FROM TURBINE EXPANSION LINES ON 481 HD 473 AT CROSSOVER PRESSURE ON 481 HB 470.

7800 LB/HR ARE REQUIRED BY THE STEAM SEALS. WHEN LEAKAGES 2, 5, 7, 8 & 9 COMBINED ARE LESS THAN 7800 LB/HR, THROTTLE STEAM MUST BE USED.

(STEAM SEAL FLOW TO STEAM PACKING EXHAUSTER IS 4200 LB/HR AT ALL LOADS.

TO DETERMINE THE FIRST STAGE ENTHALPY AND PRESSURE USED TO CALCULATE LEAKAGE NO. 3, USE CURVE 481 HA 472 TO DETERMINE FIRST STAGE SHELL PRESSURE.

THE DESIGN FLOW AT RATED STEAM CONDITIONS IS 6256642 LB/HR. THE EQUIVALENT DESIGN FLOW AT ANY OFF RATED CONDITIONS = $6256642 \dfrac{\sqrt{\dfrac{P\ NEW}{v\ NEW}}}{86.98}$

WHERE:

P NEW = NEW THROTTLE PRESSURE, PSIA
v NEW = NEW SPECIFIC VOLUME, CU. FT./LB

ENTER CURVE # 481 HA 472 WITH THROTTLE FLOW AT OFF RATED CONDITIONS TO DETERMINE FIRST STAGE SHELL PRESSURE. DRAW EXPANSION LINE FROM HP TURBINE EXHAUST PRESSURE TO FIRST STAGE SHELL PRESSURE (PARALLEL TO DESIGN HP EXPANSION LINE) TO DETERMINE FIRST STAGE SHELL ENTHALPY.

THROTTLE FLOW RATIO AT FIRST ADMISSION = 0.60

FIRST STAGE PITCH DIAMETER = 39.0

TURBINE-GENERATOR MECHANICAL LOSSES

1. 4936 KW FIXED LOSSES ARE NOT INCLUDED IN THE 3600 RPM GENERATOR LOSS CURVE.

K. R. Majoy
481 HB 471
11/30/81

GENERAL ELECTRIC COMPANY, SCHENECTADY, NEW YORK

IP7010047

820,000 KW @ 1.66/2.24/2.99" HG ABS 1% MU
TC6F-30" LSB 3600 RPM
2400 PSIG 1000/1000°F

1ST STAGE SHELL PRESSURE VS THROTTLE FLOW

NOTE: FOR OTHER THAN RATED INITIAL TEMPERATURE
READ CURVE FOR FLOW CORRECTED FOR $\sqrt{\frac{V\ DESIRED}{V\ RATED}}$
WHERE V IS INITIAL SPECIFIC VOLUME CU. FT/LB

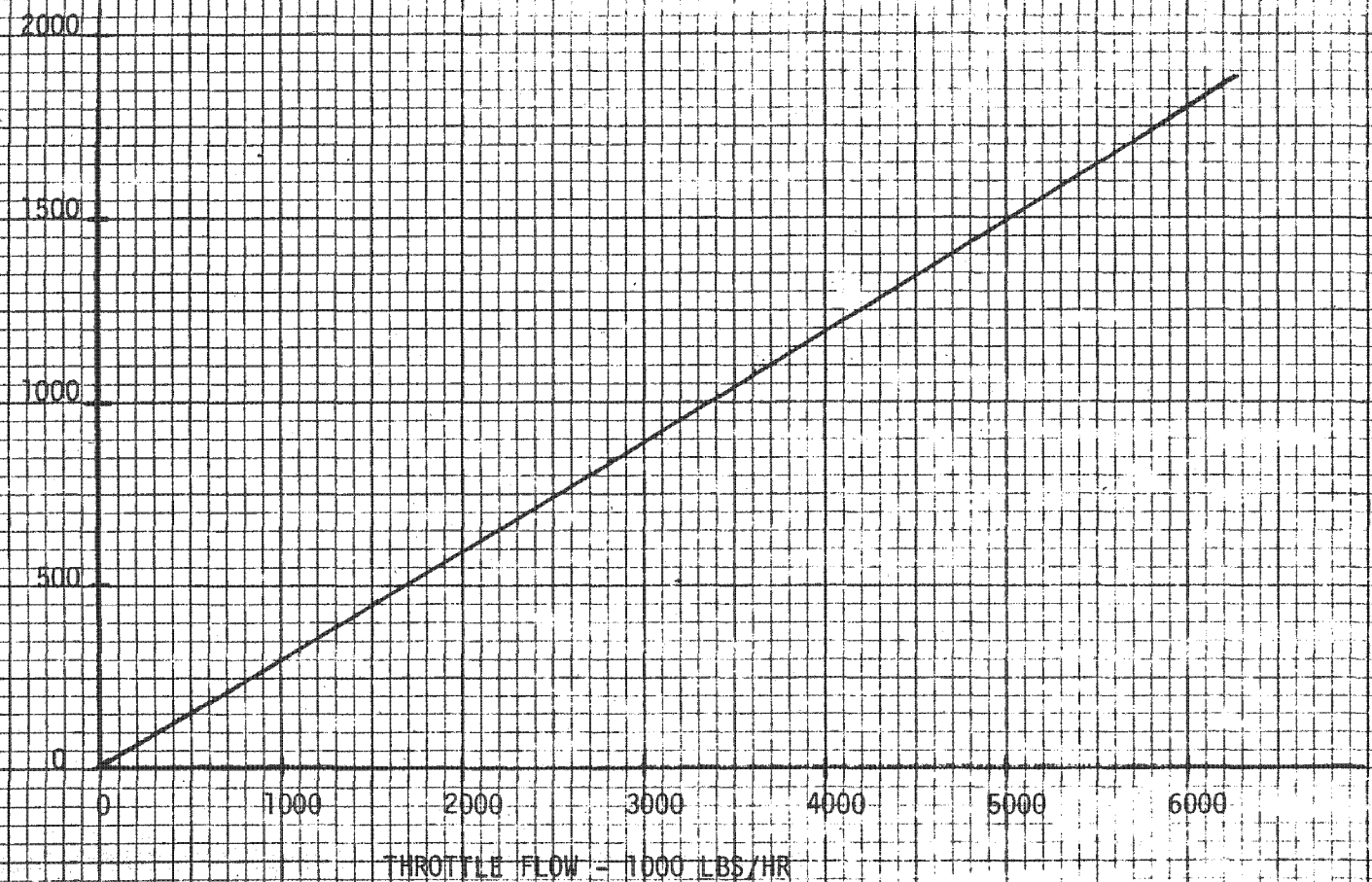

K.K. Mayo

GENERAL ELECTRIC COMPANY, SCHENECTADY, NEW YORK

11/30/81
481 HA 472

IP7010048

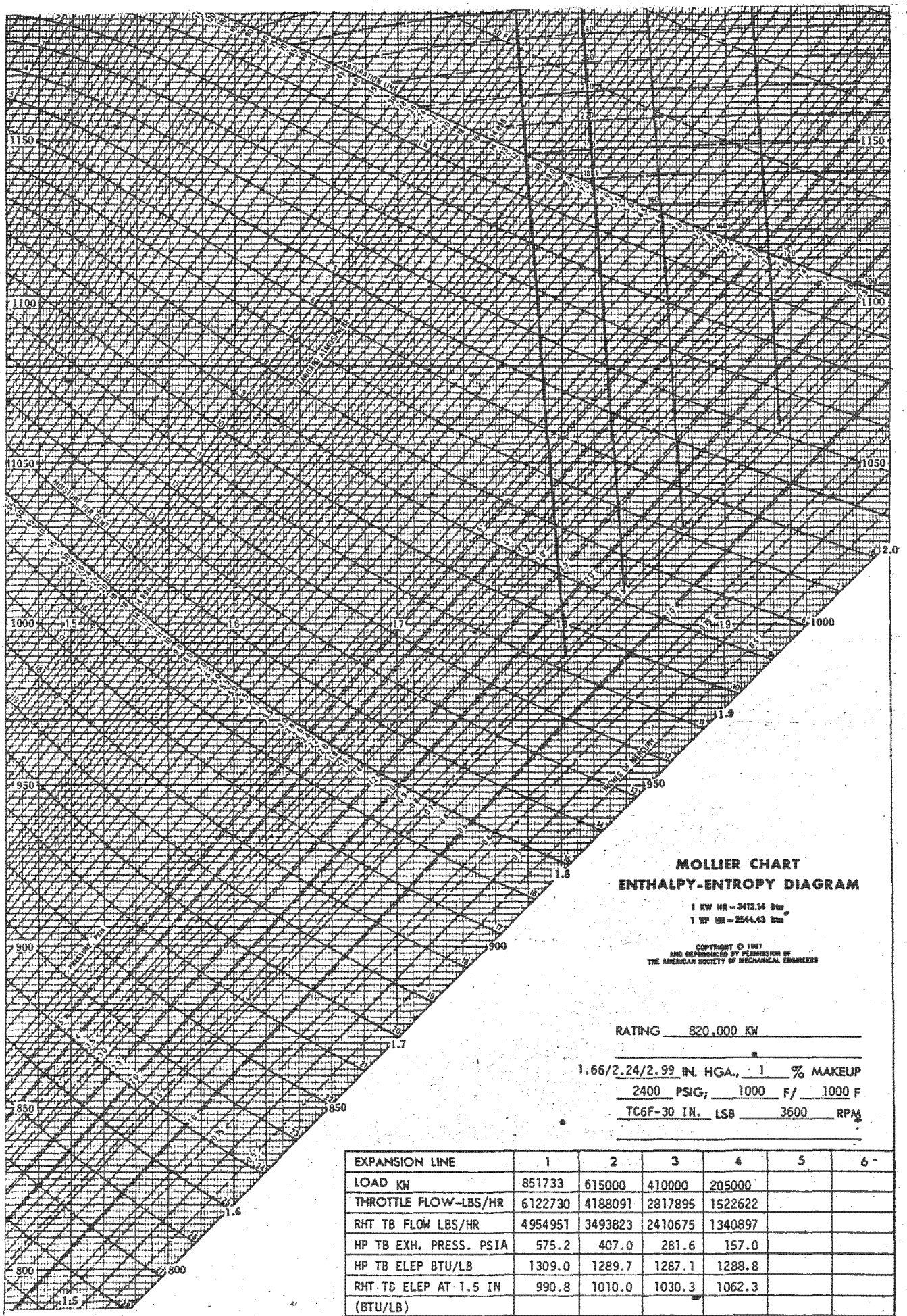

MOLLIER CHART
ENTHALPY-ENTROPY DIAGRAM

1 KW HR = 3412.14 Btu
1 HP HR = 2544.43 Btu

COPYRIGHT © 1967
AND REPRODUCED BY PERMISSION OF
THE AMERICAN SOCIETY OF MECHANICAL ENGINEERS

RATING 820,000 KW

1.66/2.24/2.99 IN. HGA., 1 % MAKEUP
2400 PSIG; 1000 F/ 1000 F
TC6F-30 IN. LSB 3600 RPM

EXPANSION LINE	1	2	3	4	5	6
LOAD KW	851733	615000	410000	205000		
THROTTLE FLOW-LBS/HR	6122730	4188091	2817895	1522622		
RHT TB FLOW LBS/HR	4954951	3493823	2410675	1340897		
HP TB EXH. PRESS. PSIA	575.2	407.0	281.6	157.0		
HP TB ELEP BTU/LB	1309.0	1289.7	1287.1	1288.8		
RHT TB ELEP AT 1.5 IN (BTU/LB)	990.8	1010.0	1030.3	1062.3		

GENERAL ELECTRIC

TG-20 6/72

BY K. K. MAJOY
DATE 11/30/81

R. K. Majoy
481 HD 473

IP7010049

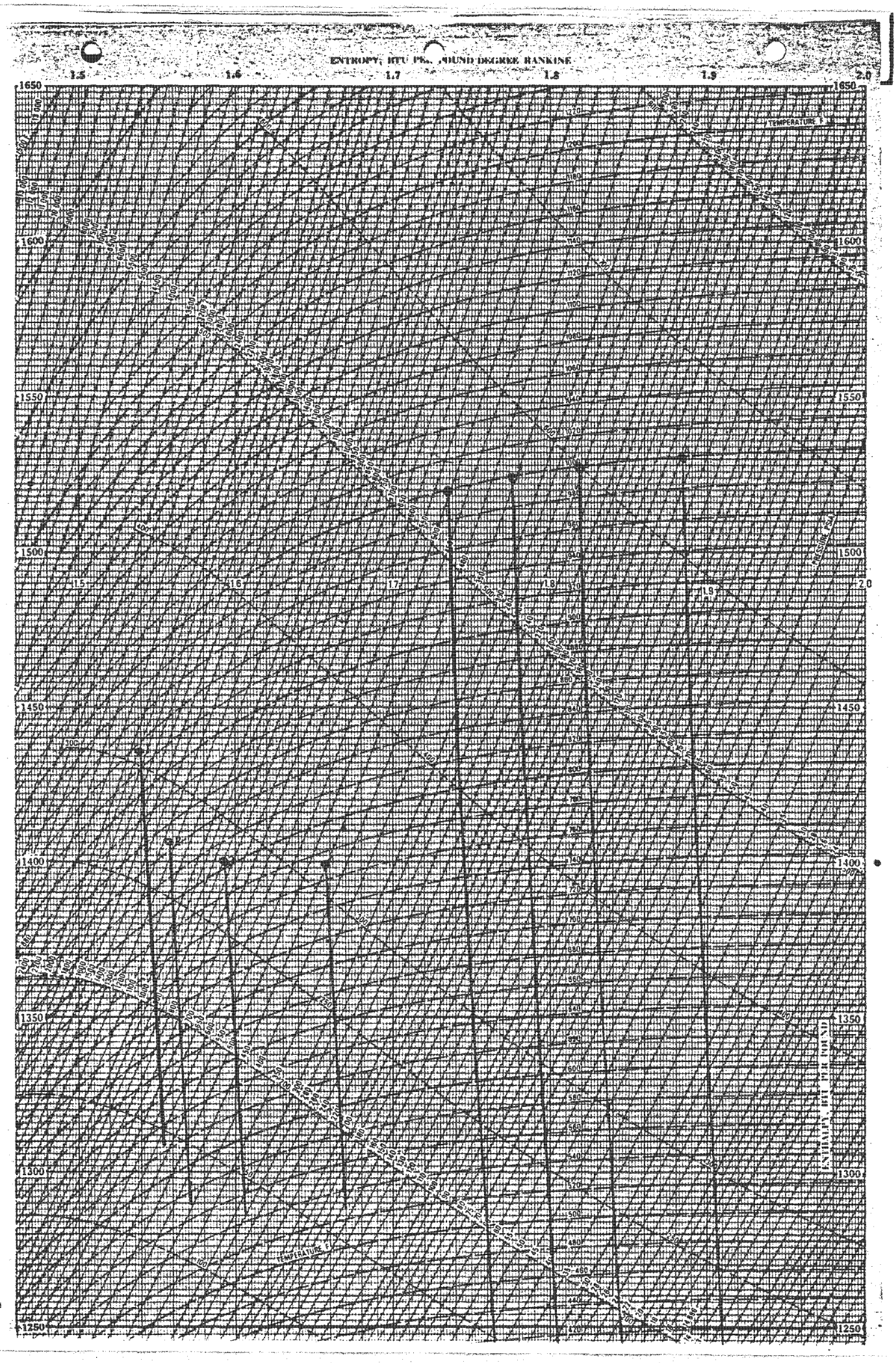
ENTROPY, BTU PER POUND DEGREE RANKINE
1.5
1.6
1.7
1.8
1.9
2.0
1650
1600
1550
1500
1450
1400
1350
1300
1250
TEMPERATURE

IP7010050

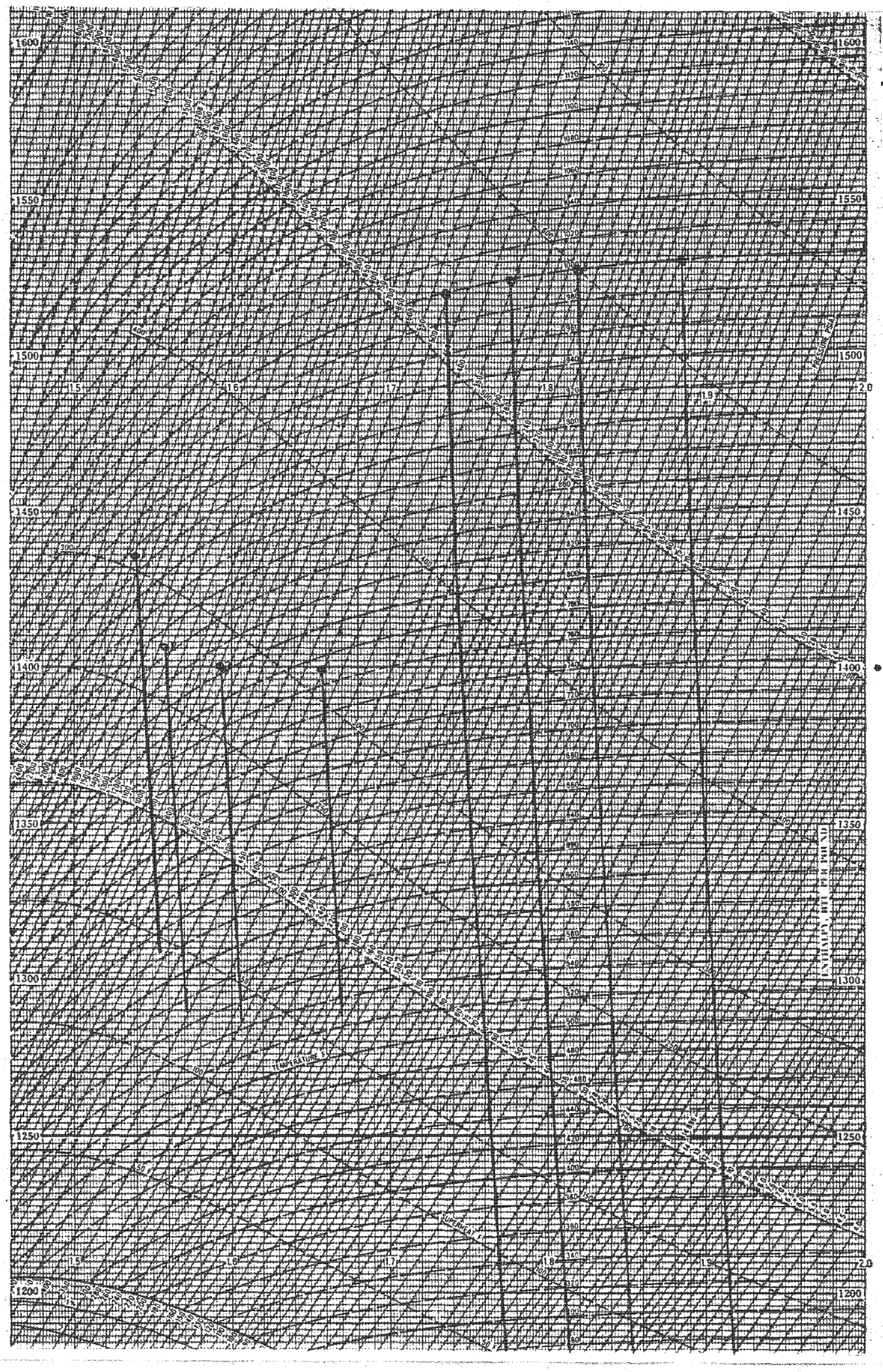
1600
1550
1500
1450
1400
1350
1300
1250
1200
1.5
1.6
1.7
1.8
1.9
2.0
TEMPERATURE F
SUPERHEAT F
PRESSURE PSIA

IP7010051

NOTES FOR EXPANSION LINES

NOTE:

1. A HIGH PRESSURE TURBINE EXPANSION LINE FOR AN INTERMEDIATE FLOW SHOULD BE DRAWN PARALLEL TO THE EXPANSION LINES THROUGH THE HIGH PRESSURE TURBINE EXPANSION LINE END POINT AND FIRST STAGE ENTHALPY.

2. A REHEAT TURBINE EXPANSION LINE FOR AN INTERMEDIATE FLOW SHOULD BE DRAWN WITH THE SAME SHAPE AS THE REHEAT EXPANSION LINES THROUGH THE REHEAT EXPANSION LINE END POINT AT 1.5"HG. ABS. EXHAUST PRESSURE. THIS EXPANSION LINE IS TO BE USED FOR THAT FLOW AT ALL EXHAUST PRESSURES.

3. THE INITIAL PRESSURE OF THE REHEAT TURBINE EXPANSION LINE IS 2% LESS THAN THE PRESSURE AHEAD OF THE INTERCEPT VALVE.

4. THE INITIAL ENTHALPY OF THE REHEAT TURBINE EXPANSION LINE IS THE ENTHALPY AT INTERCEPT VALVE PRESSURE AND HOT REHEAT TEMPERATURE. WHEN THE FIRST STAGE PACKING LEAKAGE MIXES WITH THE STEAM FROM THE REHEATER AT INTERCEPT VALVE PRESSURE AND HOT REHEAT TEMPERATURE, THE INITIAL ENTHALPY OF THE REHEAT EXPANSION LINE IS THE MIXED ENTHALPY.

5. THESE EXPANSION LINES ARE FOR HEAT BALANCE CALCULATIONS IN WHICH GLAND LEAKAGE STEAM IS USED IN THE FEEDWATER HEATING CYCLE.

6. TO OBTAIN THE ENTHALPY OF THE STEAM ENTERING THE CONDENSER READ THE REHEAT EXPANSION LINE END POINT CURVE (@1.5"HG. ABS.), CORRECT FOR EXHAUST PRESSURE USING GEZ-3589, AND CORRECT FOR EXHAUST LOSS USING THE EXHAUST LOSS CURVE.

GENERAL ELECTRIC COMPANY
SCHENECTADY, NEW YORK

371 HA 416

820,000 KW 1.68/2.24/2.99 IN. HGA 1% MAKEUP
2400 PSIG, 1000F/1000F
TC6F-30 IN LSB 3600 RPM

EXTRACTION STAGE SHELL PRESSURE

TO DETERMINE THE EXTRACTION STAGE SHELL PRESSURE, MULTIPLY THE FOLLOWING FACTORS BY:
FLOW TO THE FOLLOWING STAGE
106

EXTRACTION NO.	2	3	4 (XO)	5	6	7	8
FACTOR	104.42	45.96	28.67	15.66	10.26	8.05	7.34

NOTE:

1. APPLY THE FACTOR FOR EXTRACTION NO. 2 TO THE FLOW TO THE FIRST REHEAT STAGE TO DETERMINE THE PRESSURE AHEAD OF THE INTERCEPT VALVE. HIGH PRESSURE TURBINE EXHAUST FLANGE PRESSURE EQUALS PRESSURE AHEAD OF THE INTERCEPT VALVE DIVIDED BY 0.9.

2. FLOW TO THE FOLLOWING STAGE-THROTTLE FLOW MINUS LEAKAGES AND ALL EXTRACTIONS FROM PRECEEDING STAGES AND STAGE IN QUESTION PLUS ANY STEAM RETURNED TO THE TURBINE AHEAD OF THE STAGE IN QUESTION.

3. USE 3% PRESSURE DROP BETWEEN SHELL STAGE PRESSURE AND TURBINE SHELL FLANGE PRESSURE EXCEPT WHERE EXTRACTIONS ARE AT THE END OF A SHELL CASING.

4. THESE FACTORS ARE TO BE APPLIED FOR HEAT BALANCE CALCULATIONS AT RATED STEAM TEMPERATURES ONLY.

5. EXTRACTION PRESSURES DURING NORMAL OPERATION CAN BE GREATER THAN THOSE CALCULATED AT MAXIMUM EXPECTED THROTTLE FLOW BECAUSE OF MANUFACTURING TOLERANCES ON NOZZLE AREAS, VARIATIONS IN FLOW COEFFICIENTS, DEPOSITS IN THE STEAM PATH, ETC. TO ALLOW FOR THIS, THE GENERAL ELECTRIC COMPANY RECOMMENDS THAT EXTRACTION WATER HEATERS BE DESIGNED FOR PRESSURES AT LEAST 15% GREATER THAN THOSE CALCULATED AT MAXIMUM THROTTLE FLOW CONDITION. IT IS LIKELY THAT THERE WILL BE ABNORMAL OPERATING CONDITIONS WHICH WILL RESULT IN PRESSURES GREATER THAN THOSE DEFINED ABOVE, WHICH SHOULD BE USED AS THE ACTUAL EXTRACTION PIPING AND FEEDWATER HEATER DESIGN PRESSURES.

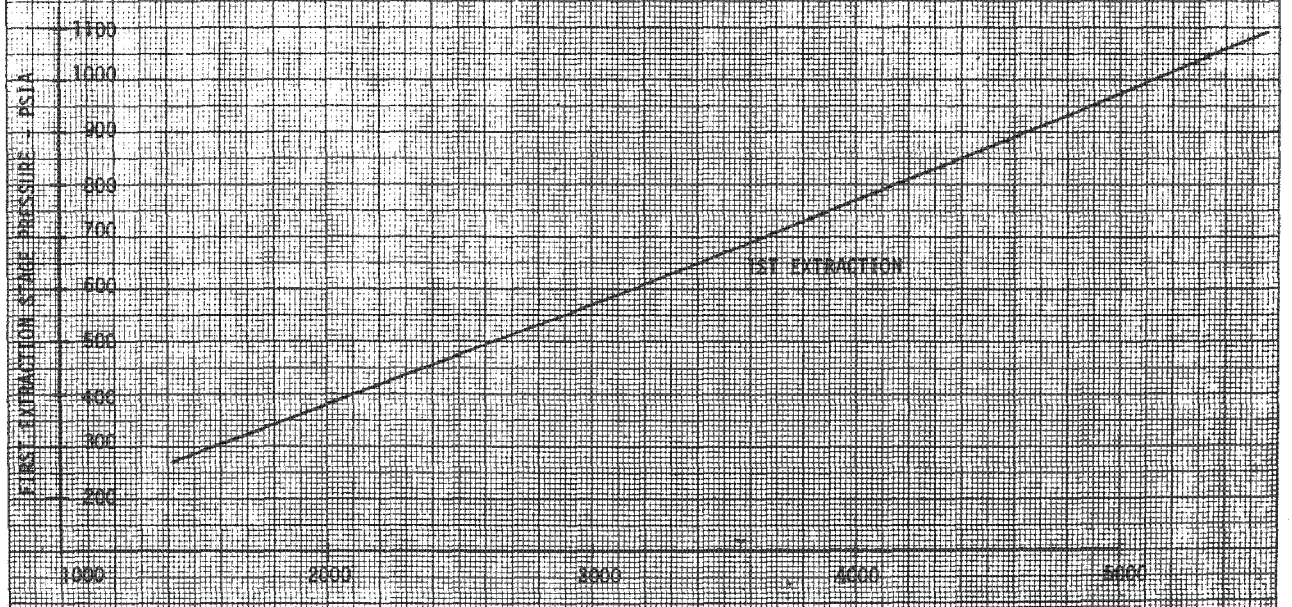

R. L. Mann

GENERAL ELECTRIC COMPANY, SCHENECTADY, NY

11/30/81

IP7010053

B&V 9255.62.1001.06-1045

MECH FILE COPY

EXHAUST PRESSURE CORRECTION FACTORS

820000 KW AT 1.66/ 2.24/ 2.99 IN HG ABS 1.00 PCT MU
TC6F-30.0 IN LSB 3600 RPM
2400 PSIA 1000/1000 T

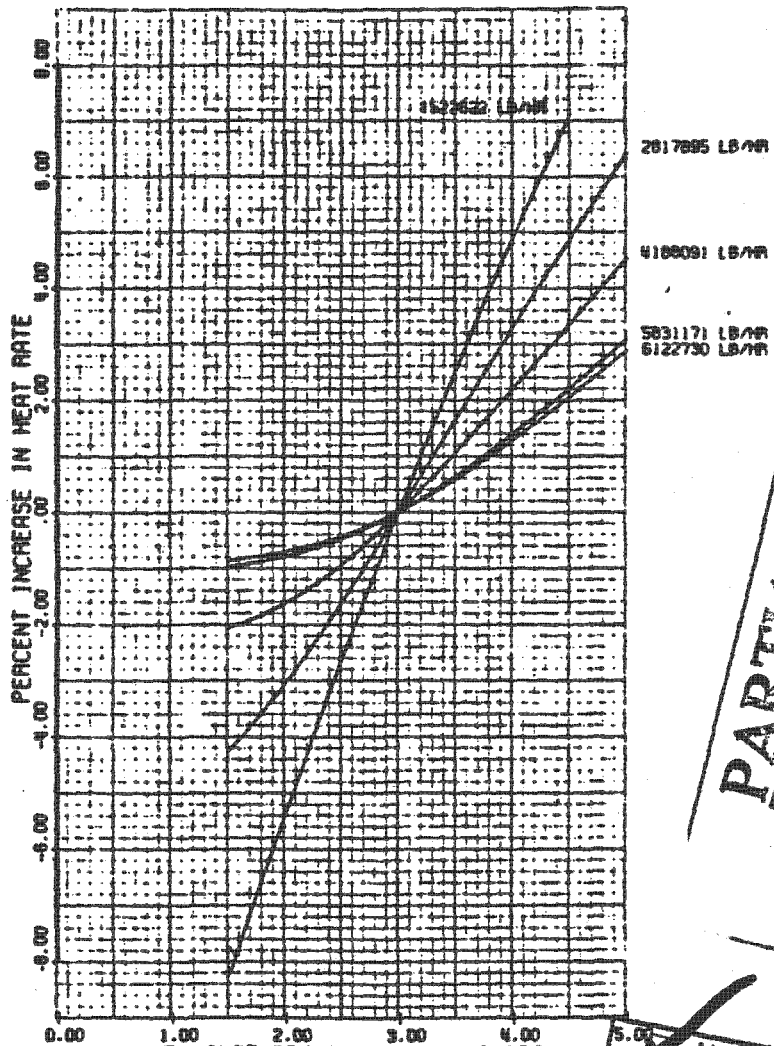

METHOD OF USING CURVE

VALUES NEAR CURVES ARE FLOWS AT 2400 PSIA 1000 T
THESE CORRECTION FACTORS ASSUME CONSTANT CONTROL VALVE OPENING
APPLY CORRECTIONS TO HEAT RATE AND KW LOADS
AT 2.99/ 2.24/ 1.66 IN HG ABS AND 0.0 PCT MU.

THE PERCENT CHANGE IN KW LOAD FOR VARIOUS EXHAUST PRESSURES IS EQUAL TO
(MINUS PCT INCREASE IN HEAT RATE)100/(100 + PCT INCREASE IN HEAT RATE)

THESE CORRECTION FACTORS ARE NOT GUARANTEED

PRESSURES ALONG ABSCISSA ARE PRESSURES IN HOOD A

PRESSURE(IN HG ABS) FOR	HOOD A	HOOD B	HOOD C
	1.50	1.09	.78
	2.00	1.47	1.07
	2.50	1.85	1.36
	3.00	2.24	1.66
	3.50	2.63	1.96
	4.00	3.03	2.27
	4.50	3.42	2.58
	5.00	3.82	2.89

GENERAL ELECTRIC COMPANY. SCHENECTADY. NEW YORK 12/04/81

3/26/84 Rev.1

PARTIAL

NO EXCEPTIONS NOTED
EXCEPTIONS NOTED
REVISE & RESUBMIT FOR DISTRIBUTION
RETURNED FOR CORRECTION
JUN 18 1984
THIS DOES NOT RELIEVE CONTRACTOR FROM RESPONSIBILITY FOR ERRORS OR DEVIATIONS FROM CONTRACT REQUIREMENTS.
BLACK & VEATCH

481 HB 475

IP7010054

EXHAUST PRESSURE CORRECTION FACTORS

820000 KW AT 1.66/ 2.24/ 2.99 IN HG ABS 1.00 PCT MU
TC6F-30.0 IN LSB 3600 RPM
2400 PSIA 1000/1000 T

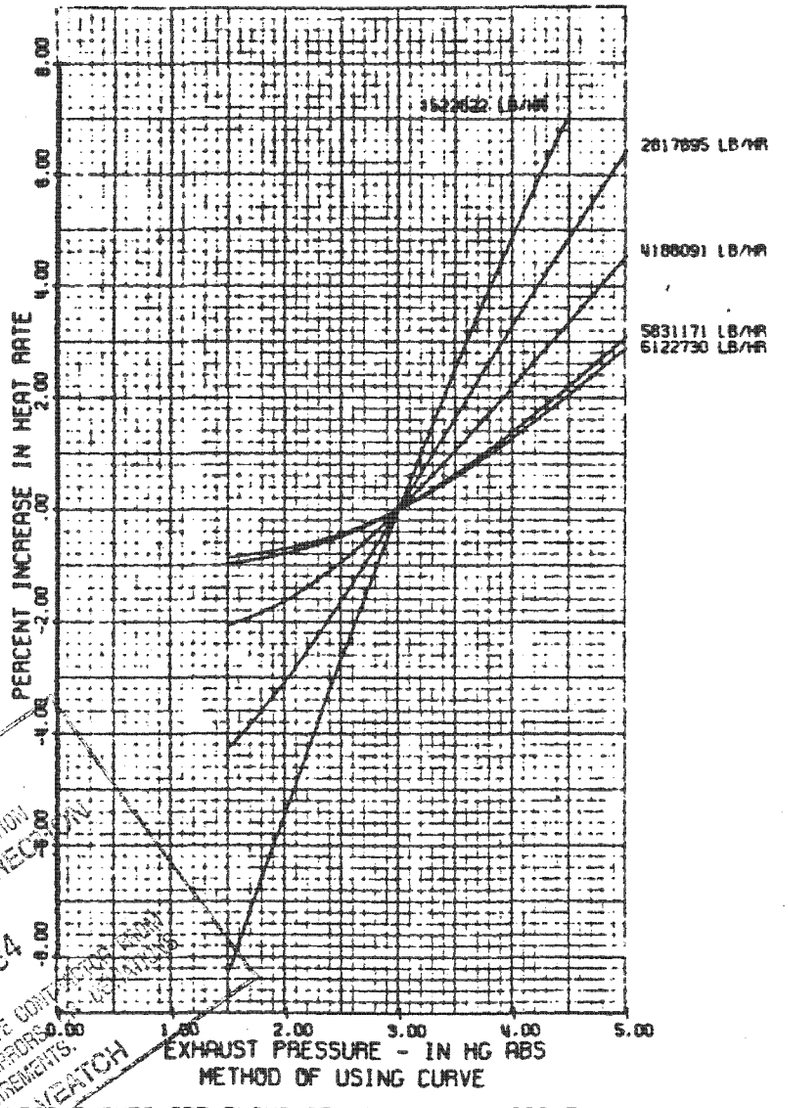

METHOD OF USING CURVE

VALUES NEAR CURVES ARE FLOWS AT 2400 PSIA 1000 T
THESE CORRECTION FACTORS ASSUME CONSTANT CONTROL VALVE OPENING
APPLY CORRECTIONS TO HEAT RATE AND KW LOADS
AT 2.99/ 2.24/ 1.66 IN HG ABS AND 0.0 PCT MU.

THE PERCENT CHANGE IN KW LOAD FOR VARIOUS EXHAUST PRESSURES IS EQUAL TO
(MINUS PCT INCREASE IN HEAT RATE)100/(100 + PCT INCREASE IN HEAT RATE)

THESE CORRECTION FACTORS ARE NOT GUARANTEED

PRESSURES ALONG ABSCISSA ARE PRESSURES IN HOOD A

PRESSURE(IN HG ABS) FOR	HOOD A	HOOD B	HOOD C
	1.50	1.09	.78
	2.00	1.47	1.07
	2.50	1.85	1.36
	3.00	2.24	1.66
	3.50	2.63	1.96
	4.00	3.03	2.27
	4.50	3.42	2.58
	5.00	3.82	2.89

GENERAL ELECTRIC COMPANY, SCHENECTADY, NEW YORK 12/04/81

3/26/84 Rev.1

B&V 9255.62.1001.06-10045

481 HB 475

☐ NO EXCEPTIONS NOTED
☐ EXCEPTIONS NOTED
REVISE & RESUBMIT FOR DISTRIBUTION
☐ RETURNED FOR CORRECTION
JUN 18 1984
REVIEW DOES NOT RELIEVE CONTRACTOR FROM RESPONSIBILITY FOR ERRORS OR OMISSIONS FROM CONTRACT REQUIREMENTS.
WEATCH

481 HB 475

IP7010055

452 HB 890

NET HEAT RATE CURVE

820000 KW 1.66/2.24/2.99 IN HG ABS. 1.0 PCT MU
TC6F 30.0 IN LSB 3600 RPM
2400 PSIG 1000./1000. T

THESE HEAT RATES ARE BASED ON NORMAL EXTRACTION OPERATION AS SHOWN ON HEAT BALANCE 481 HB 111

DASHED PORTION OF CURVE IS AT FLOWS IN EXCESS OF RATING FLOW

CIRCLED POINTS REPRESENT POINTS THROUGH WHICH CURVE WAS DRAWN

THIS CURVE IS NOT GUARANTEED

THESE HEAT RATES ARE AT 1.66,2.24,2.99 IN.HG.ABS.EXH. PRESS.,1 PCT MU AND RATED STEAM CONDITIONS AT ALL LOADS

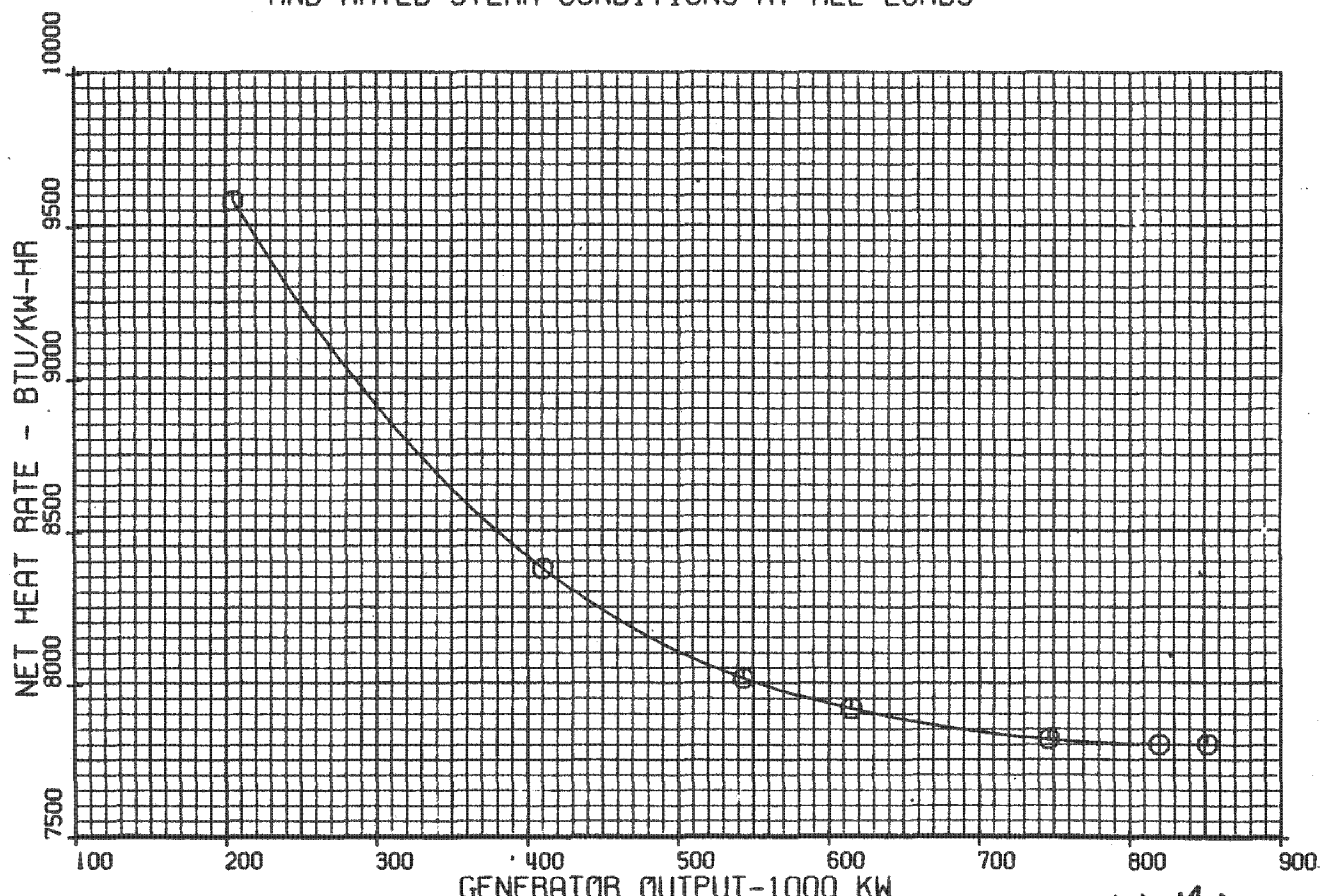

K.K. Majoy

GENERAL ELECTRIC COMPANY, SCHENECTADY, NEW YORK 11/30/81 452 HB 890

IP7010056

452 HB 891

GENERATOR LOSSES

991000 KVA AT 63 PSIG H2 PRESS
CONDUCTOR COOLED 3600 RPM

NOTES

GENERATOR LOSSES ASSUME RATED HYDROGEN PRESSURE AT ALL LOADS.

GENERATOR LOSS AT REDUCED HYDROGEN PRESSURE (P) = LOSS AT RATED HYDROGEN PRESSURE - 14.3 (P_{RATED} - P). USE GENERATOR REACTIVE CAPABILITY CURVE TO DETERMINE GENERATOR CAPABILITY AT REDUCED HYDROGEN PRESSURE.

TURBINE GENERATOR MECHANICAL LOSSES ARE NOT INCLUDED IN THE GENERATOR LOSS CURVE.

IF HYDROGEN AND STATOR LIQUID COOLERS ARE LOCATED IN THE CONDENSATE LINE, THE LOSS TRANSFERRED TO THE COOLERS IS 898 KW LESS THAN THE GENERATOR LOSS AT ALL LOADS.

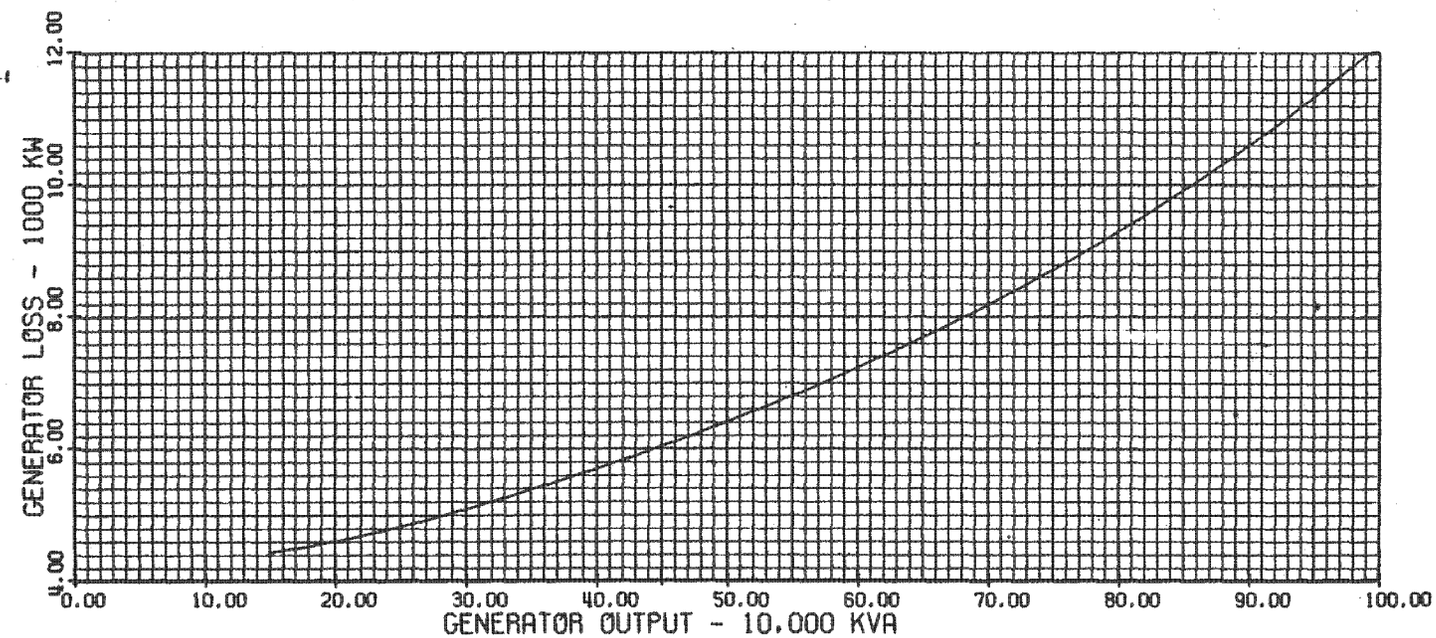

GENERAL ELECTRIC COMPANY, SCHENECTADY, NEW YORK 12/01/81 452 HB 891

K.K. Majoy

IP7010057

452 HB 892

HIGH PRESSURE TURBINE INTERNAL EFFICIENCY

820000 KW 1.66/2.24/2.99 IN HG ABS. 1.0 PCT MU
TC6F 30.0 IN LSB 3600 RPM
2400 PSIG 1000./1000. T

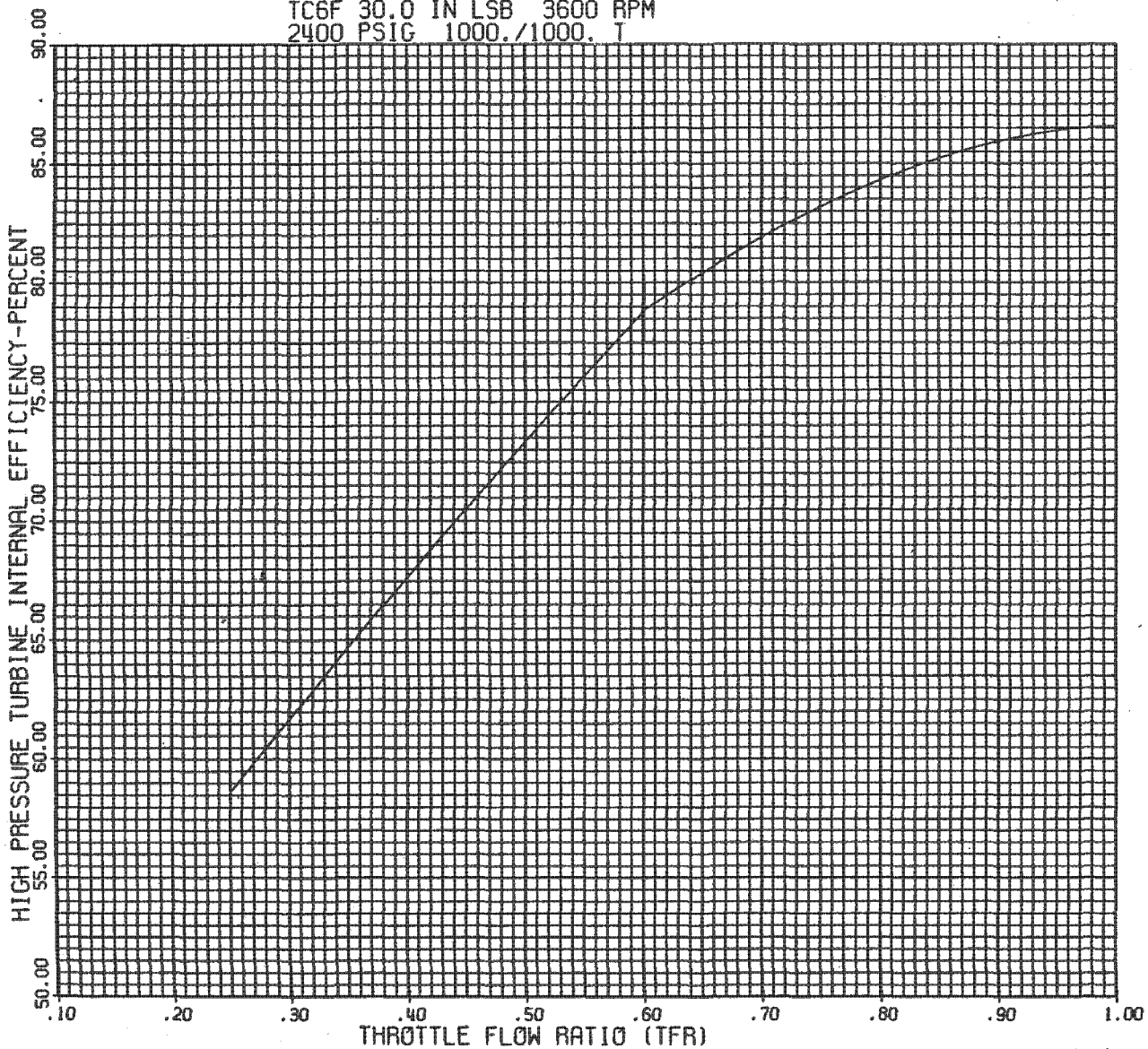

THIS CURVE IS ON A VALVE BEST POINT BASIS

TFR = (THROTTLE FLOW AT ANY STEAM CONDITIONS)/(VALVES WIDE OPEN THROTTLE FLOW AT SAME STEAM CONDITIONS)

APPLY THE EFFICIENCY FROM THIS CURVE TO THE AVAILABLE ENERGY FROM THE TURBINE STOP VALVES TO THE HIGH PRESSURE TURBINE EXHAUST

BREAK IN CURVE IS FIRST ADMISSION POINT. THROTTLING CONTROL OCCURS AT ALL LOWER THROTTLE FLOW RATIOS

FOR OFF-RATED STEAM CONDITIONS USE EQUIVALENT TFR WHERE

$$\text{EQUIV TFR} = \frac{(\text{OFF-RATED FLOW})}{(\text{DESIGN FLOW})}\sqrt{\frac{(P/V)\ \text{RATED}}{(P/V)\ \text{OFF-RATED}}}$$

GENERAL ELECTRIC COMPANY, SCHENECTADY, NEW YORK 11/30/81 K.K. Major 452 HB 892

IP7010058

452 HB 893

REHEAT TURBINE INTERNAL EFFICIENCY

820000 KW 1.66/2.24/2.99 IN HG ABS. 1.0 PCT MU
TC6F 30.0 IN LSB 3600 RPM
2400 PSIG 1000./1000. T

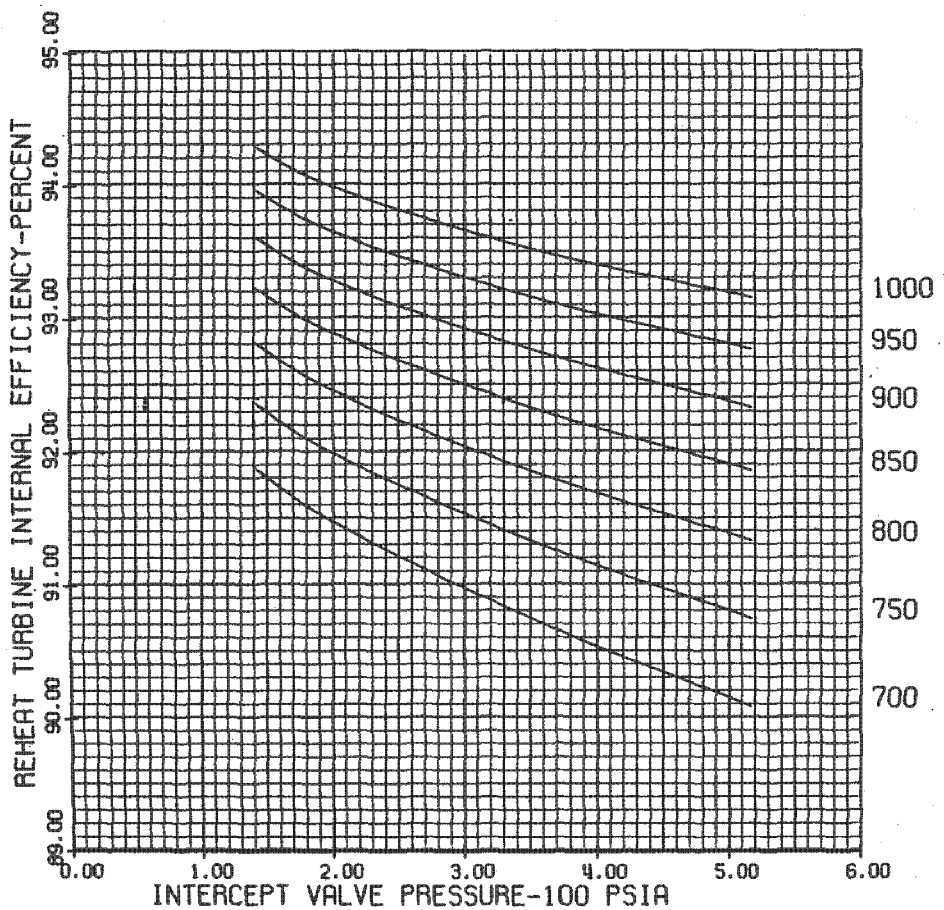

APPLY EFFICIENCY TO AVAILABLE ENERGY BETWEEN INTERCEPT VALVE PRESSURE AND BOWL ENTHALPY (INCLUDING PACKING LEAKAGE MIX, IF ANY) AND 1.5 IN. HG. ABS.

$ELEP_{1.5} = H_{BOWL} - EFF(AE)$

USE CURVE GEZ 3589 TO CORRECT ELEP AT 1.5 IN. HG. ABS. TO OTHER EXHAUST PRESSURES

SEE ASME PAPER 62WA209 FOR CONSTRUCTION OF EXPANSION LINE

FIGURES NEAR CURVE ARE REHEAT TEMPERATURE-F

GENERAL ELECTRIC COMPANY, SCHENECTADY, NEW YORK

11/30/81 K.K. Major 452 HB 893

IP7010059

452 HB 894

HIGH PRESSURE TURBINE EXPANSION LINE END POINTS

820000 KW 1.66/2.24/2.99 IN HG ABS. 1.0 PCT MU
TC6F 30.0 IN LSB 3600 RPM
2400 PSIG 1000./1000. T

THIS CURVE ASSUMES A PRESSURE DROP OF 10.00 PERCENT FROM HIGH PRESSURE TURBINE EXHAUST TO INTERCEPT VALVE. THESE HIGH PRESSURE EXPANSION LINE END POINTS CANNOT BE USED FOR OTHER PRESSURE DROPS

THIS CURVE IS ONLY GOOD FOR STEAM CONDITIONS OF 2400/1000/1000. FOR VARIABLE THROTTLE CONDITIONS, FIRST ENTER CURVE 452 HB 892 TO DETERMINE HP TURBINE INTERNAL EFFICIENCY.

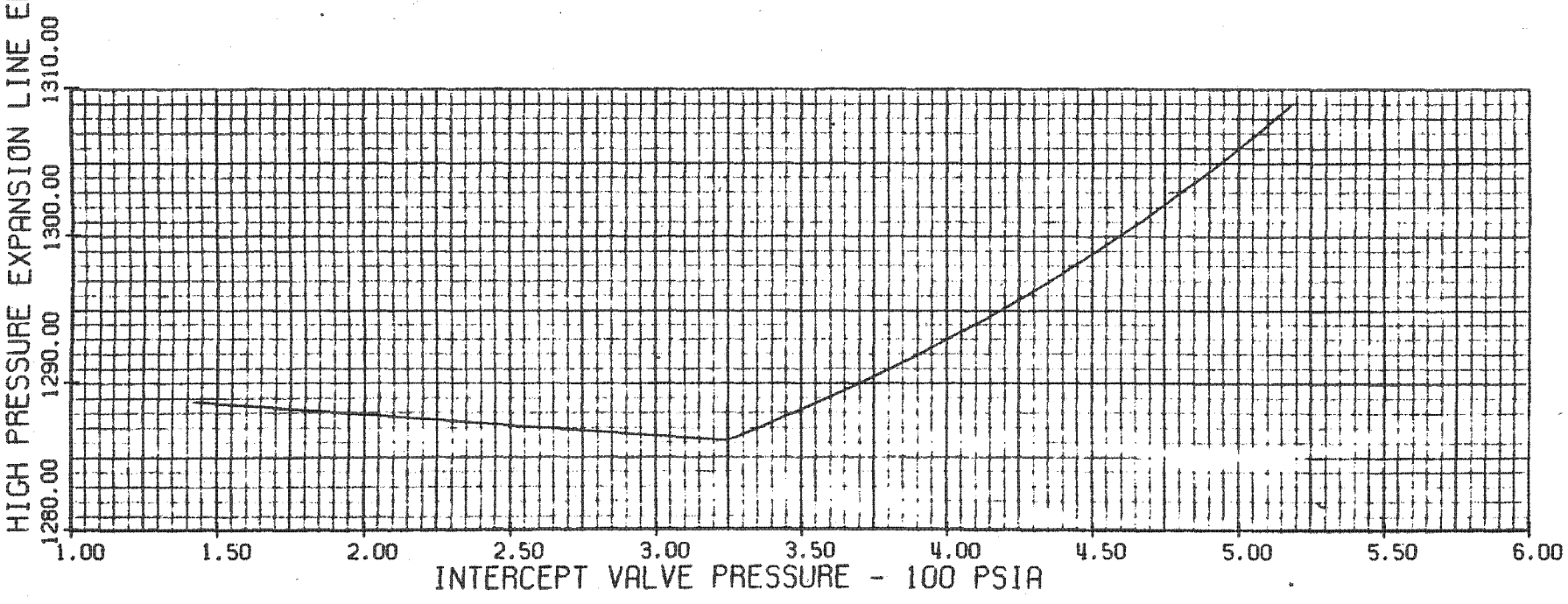

GENERAL ELECTRIC COMPANY, SCHENECTADY, NEW YORK 12/01/81 452 HB 894

K.K. Majoy

IP7010060

REHEAT EXPANSION LINE END POINTS AT 1.5 IN.HG.ABS.

452 HB 895

820000 KW 1.66/2.24/2.99 IN HG ABS. 1.0 PCT MU
TC6F 30.0 IN LSB 3600 RPM
2400 PSIG 1000./1000. T

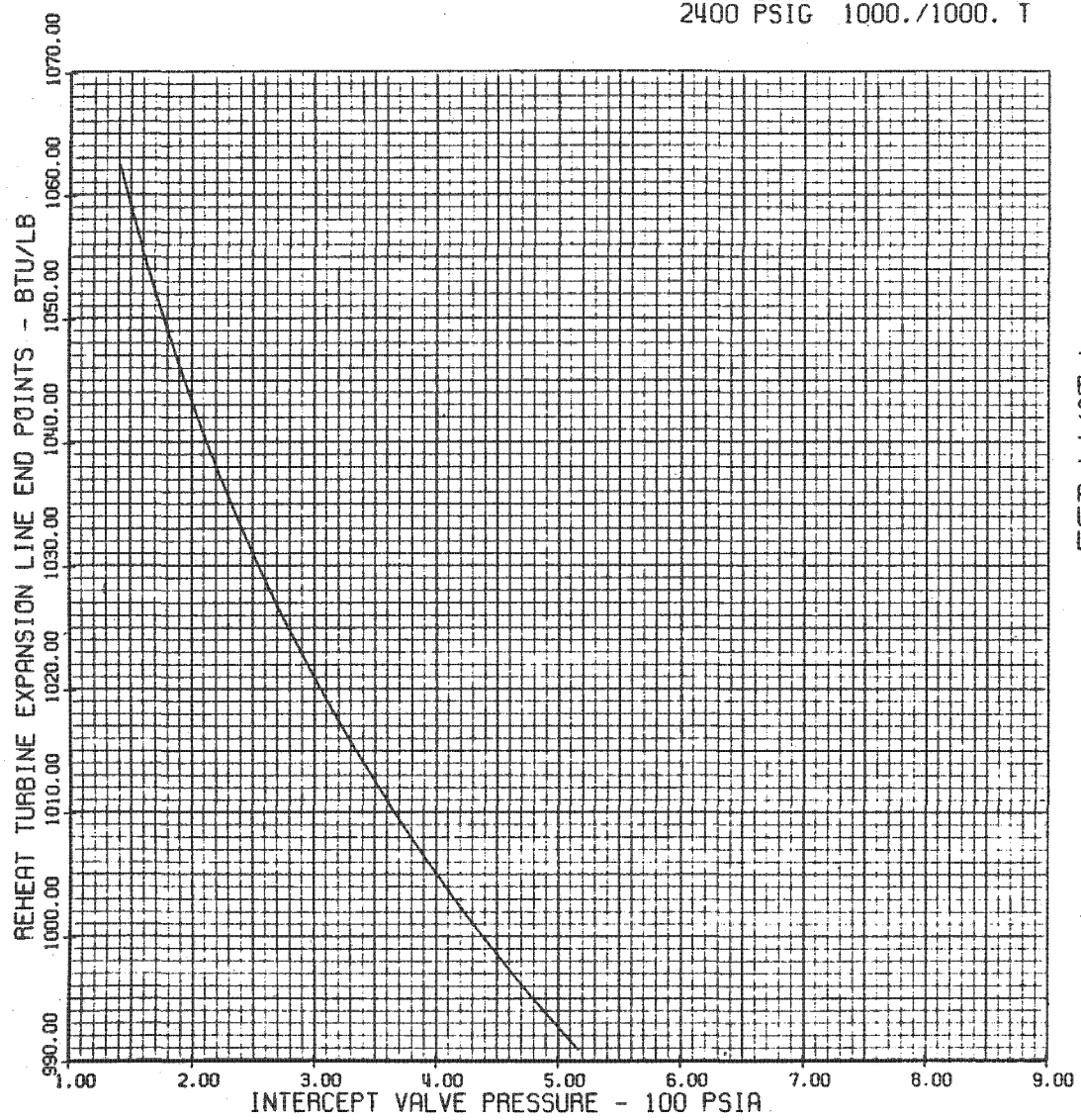

THESE EXPANSION LINE END POINTS ARE FOR HEAT BALANCE CALCULATIONS IN WHICH GLAND LEAKAGE STEAM IS USED IN THE FEEDWATER HEATING CYCLE.

TO OBTAIN THE ENTHALPY OF THE STEAM ENTERING THE CONDENSER READ THE CURVE AT 1.5 IN.HG ABS. AND CORRECT TO THE DESIRED EXHAUST PRESSURE USING CURVE GEZ-3589, AND CORRECT FOR EXHAUST LOSS USING CURVE 476 HB 902

THIS CURVE IS GOOD ONLY FOR REHEAT TEMPERATURES OF 1000°F. FOR OTHER TEMPERATURES, USE CURVE 452 HB 893.

K.K. Majoy

GENERAL ELECTRIC COMPANY, SCHENECTADY, NEW YORK

11/30/81

452 HB 895

IP7010061

476HB902

3600 RPM
30" X 85" LSB

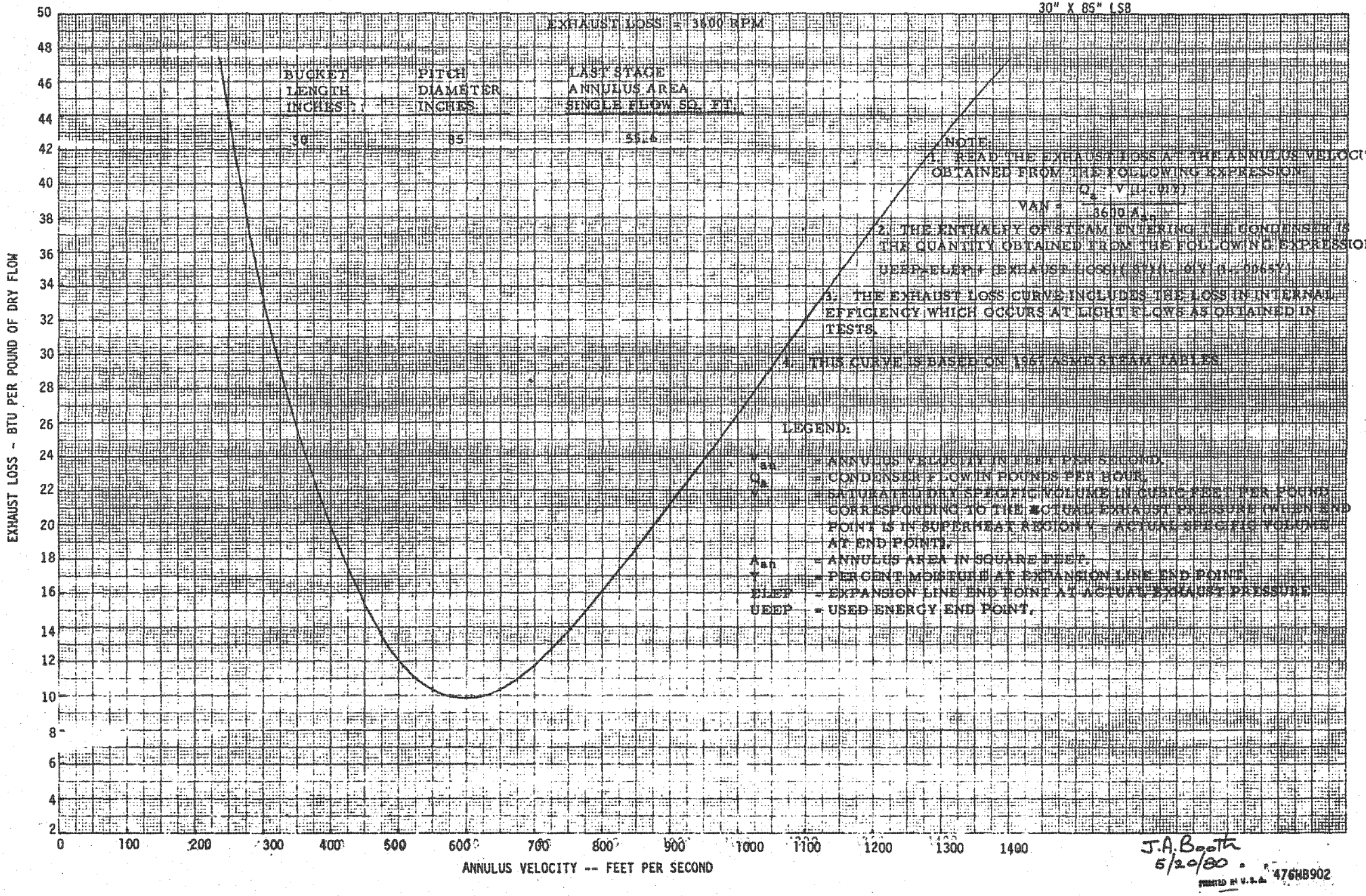

J.A. Booth
5/20/80

PRINTED IN U.S.A. 476HB902

IP7010062

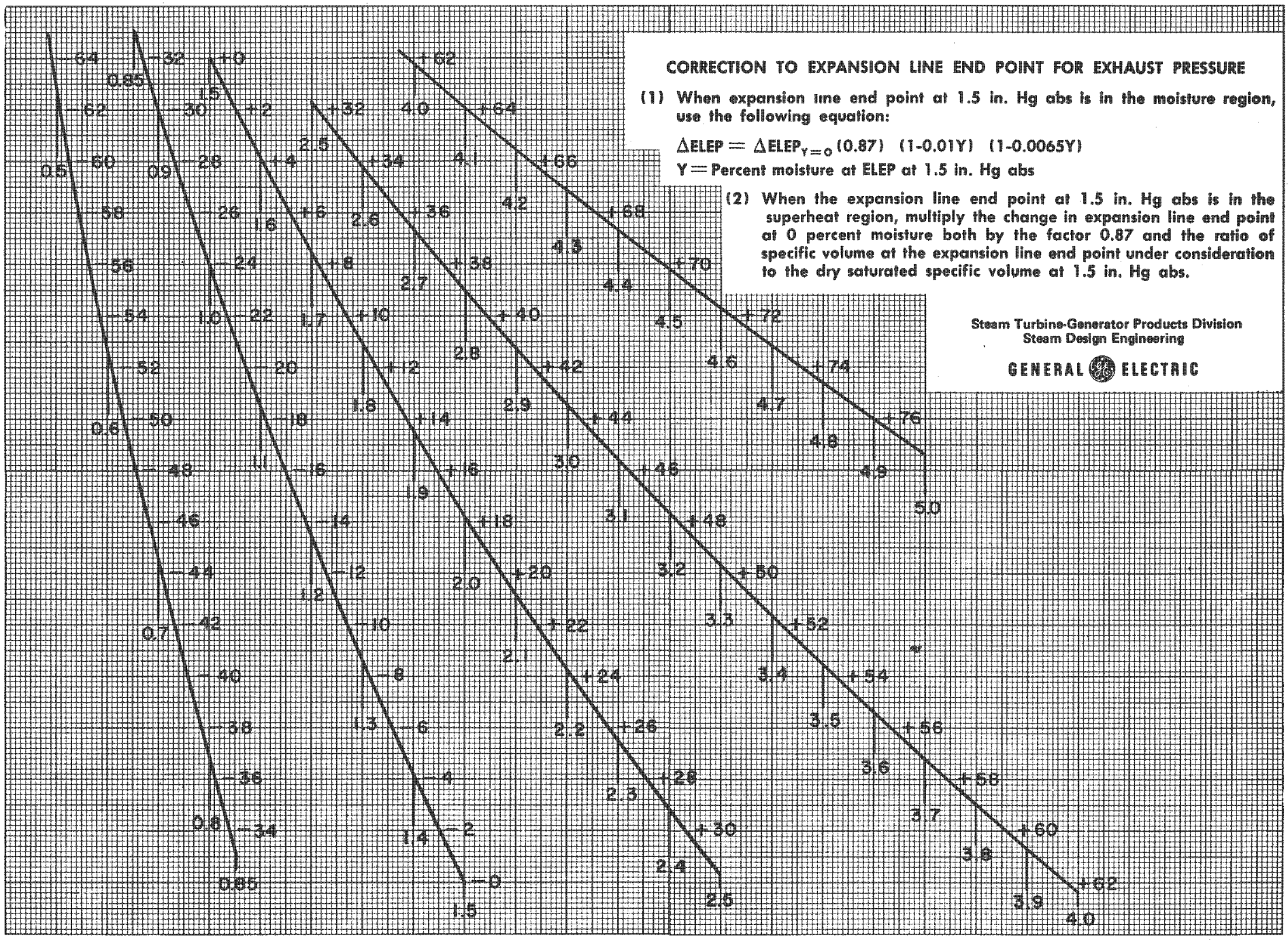

CORRECTION TO EXPANSION LINE END POINT FOR EXHAUST PRESSURE

(1) When expansion line end point at 1.5 in. Hg abs is in the moisture region, use the following equation:

$$\Delta ELEP = \Delta ELEP_{Y=0}\,(0.87)\;(1-0.01Y)\;(1-0.0065Y)$$

Y = Percent moisture at ELEP at 1.5 in. Hg abs

(2) When the expansion line end point at 1.5 in. Hg abs is in the superheat region, multiply the change in expansion line end point at 0 percent moisture both by the factor 0.87 and the ratio of specific volume at the expansion line end point under consideration to the dry saturated specific volume at 1.5 in. Hg abs.

Steam Turbine-Generator Products Division
Steam Design Engineering

GENERAL ELECTRIC

IP7010063

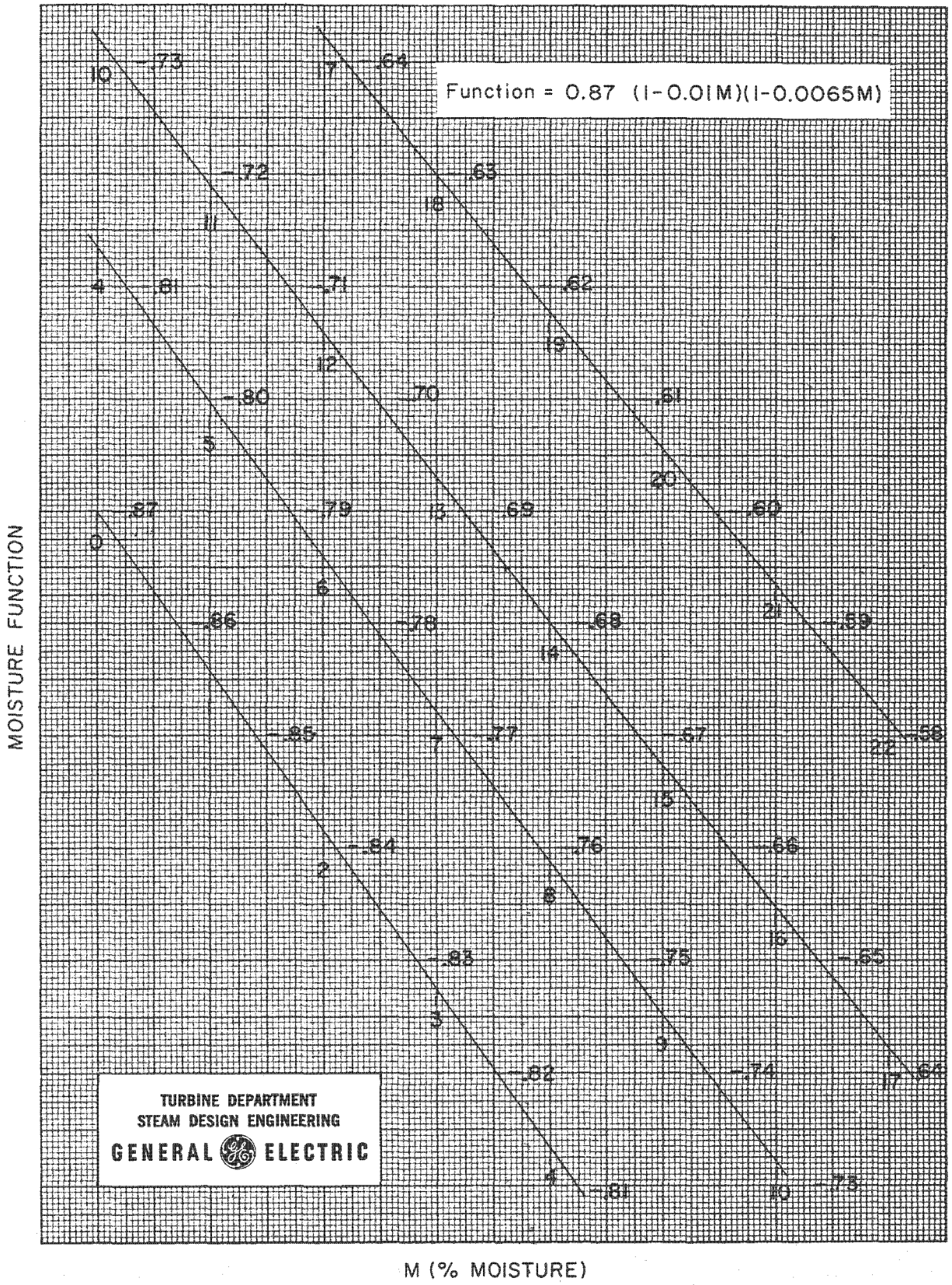

GEZ-5834

IP7010064

INITIAL PRESSURE CORRECTION FACTORS

FOR SINGLE REHEAT UNITS

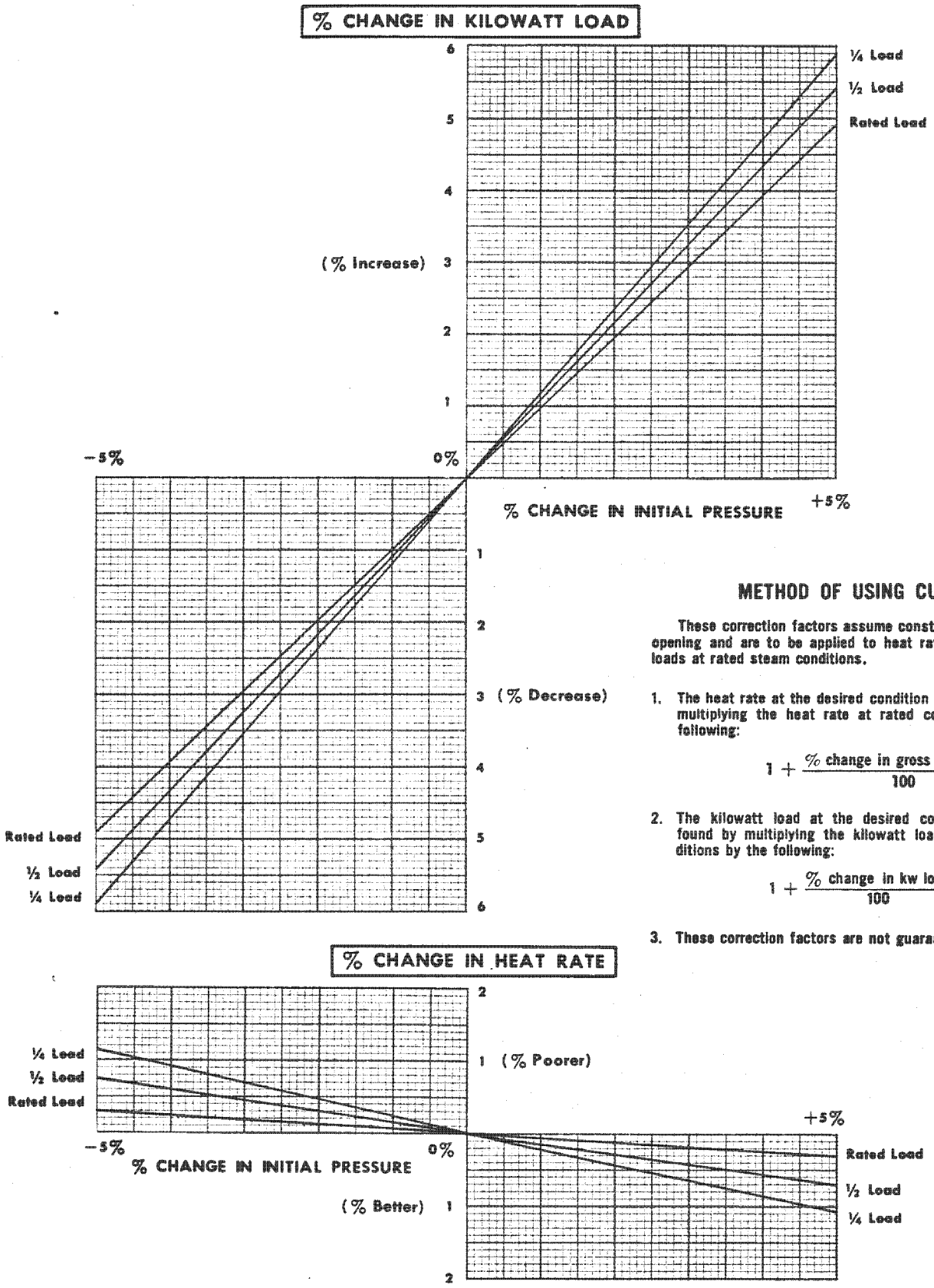

METHOD OF USING CURVES

These correction factors assume constant control valve opening and are to be applied to heat rates and kilowatt loads at rated steam conditions.

1. The heat rate at the desired condition can be found by multiplying the heat rate at rated conditions by the following:

$$1 + \frac{\%\ \text{change in gross heat rate}}{100}$$

2. The kilowatt load at the desired conditions can be found by multiplying the kilowatt load at rated conditions by the following:

$$1 + \frac{\%\ \text{change in kw load}}{100}$$

3. These correction factors are not guaranteed.

INITIAL TEMPERATURE CORRECTION FACTORS

FOR SINGLE REHEAT – SUBCRITICAL PRESSURE UNITS

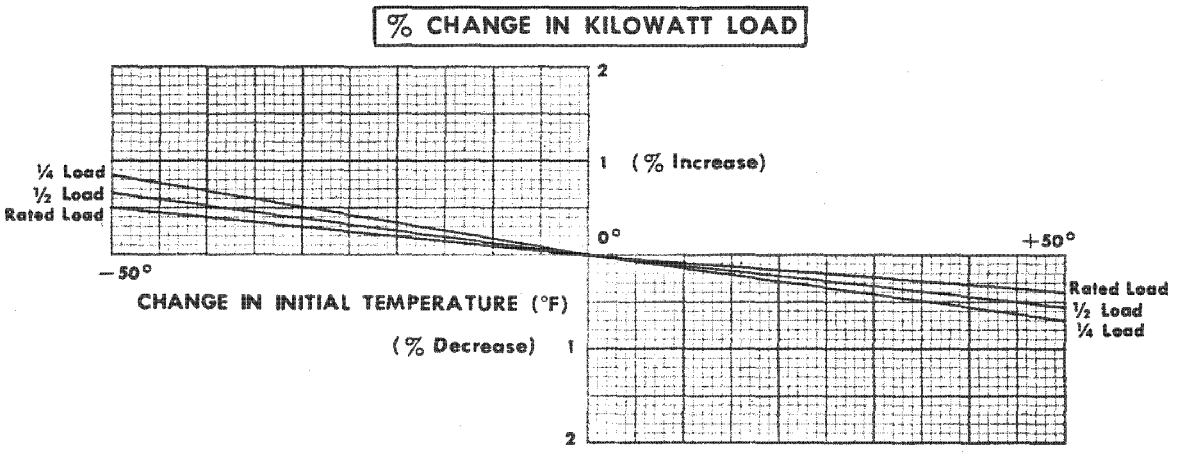

METHOD OF USING CURVES

These correction factors assume constant control valve opening and are to be applied to heat rates and kilowatt loads at rated steam conditions.

1. The heat rate at the desired condition can be found by multiplying the heat rate at rated conditions by the following:

$$1 + \frac{\%\ \text{change in gross heat rate}}{100}$$

2. The kilowatt load at the desired conditions can be found by multiplying the kilowatt load at rated conditions by the following:

$$1 + \frac{\%\ \text{change in kw load}}{100}$$

3. These correction factors are not guaranteed.

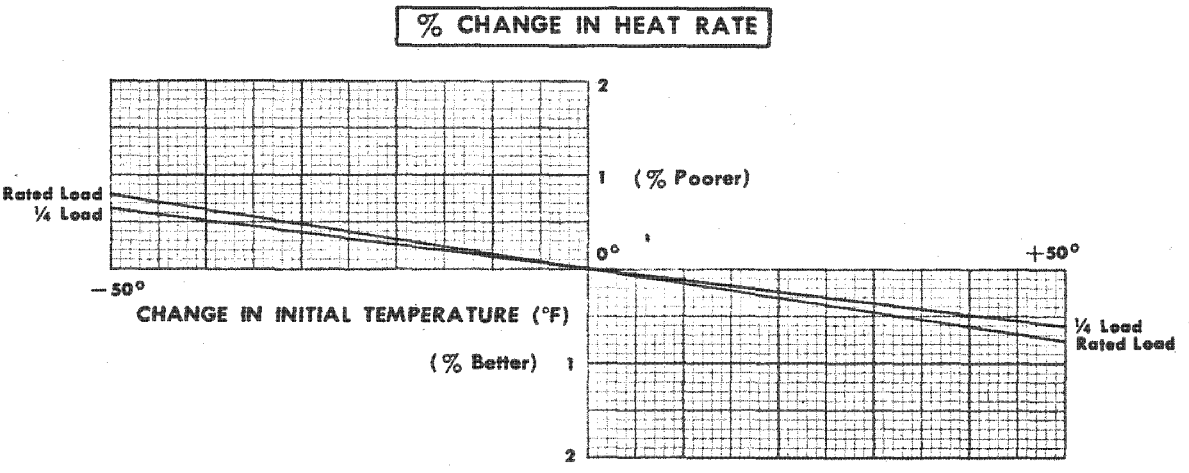

GENERAL ELECTRIC

IP7010066

REHEAT TEMPERATURE CORRECTION FACTORS

FOR SINGLE REHEAT UNITS

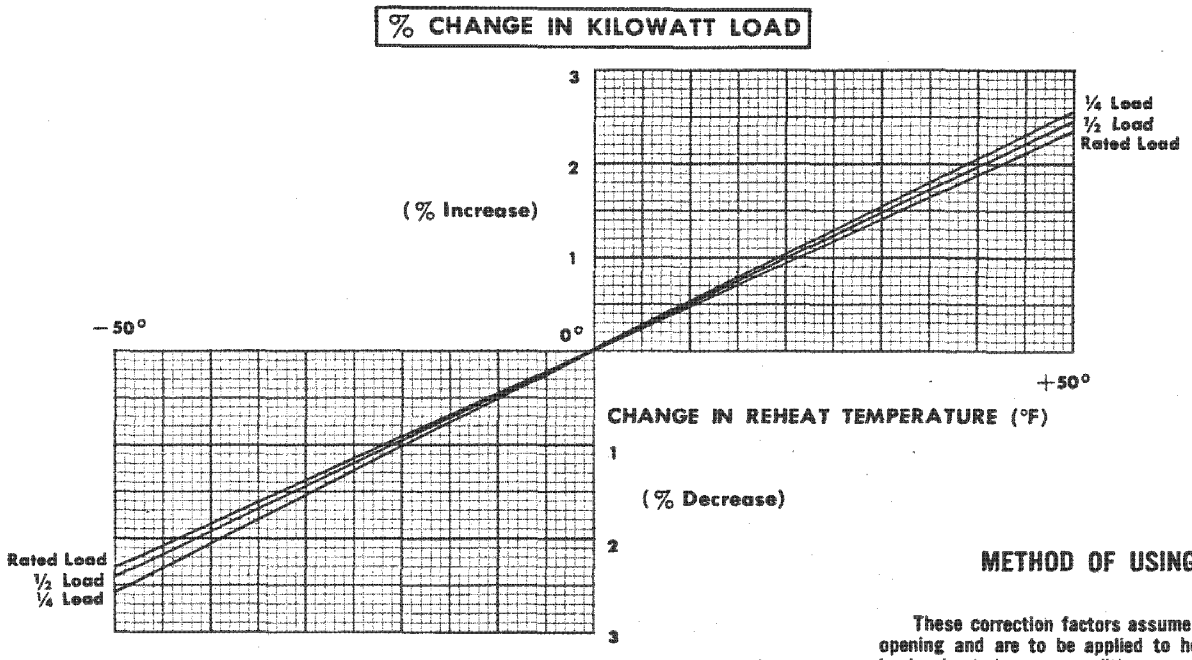

METHOD OF USING CURVES

These correction factors assume constant control valve opening and are to be applied to heat rates and kilowatt loads at rated steam conditions.

1. *The heat rate at the desired condition can be found by* multiplying the heat rate at rated conditions by the following:

$$1 + \frac{\%\ \text{change in gross heat rate}}{100}$$

2. The kilowatt load at the desired conditions can be found by multiplying the kilowatt load at rated conditions by the following:

$$1 + \frac{\%\ \text{change in kw load}}{100}$$

3. These correction factors are not guaranteed.

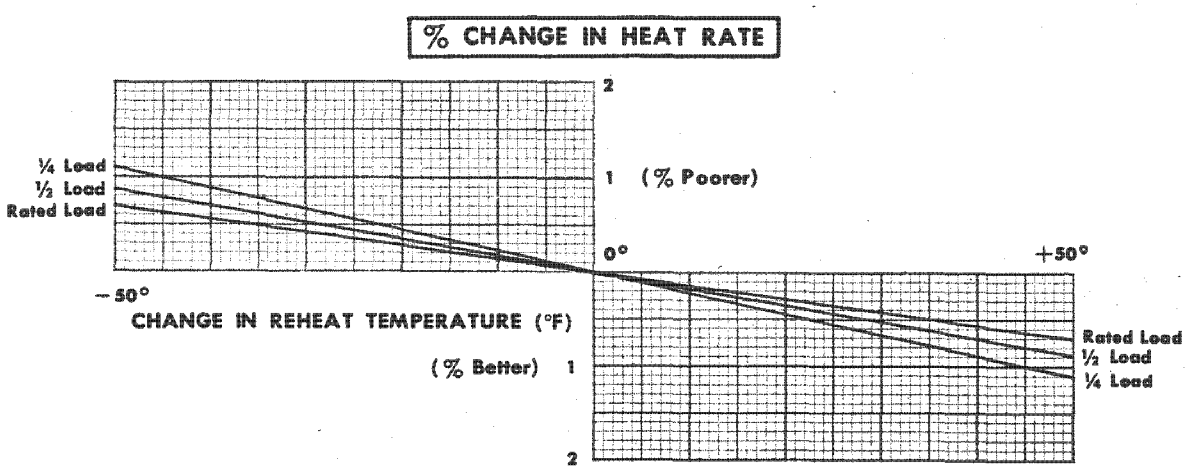

GEZ-3617
6–75 (2500)

GENERAL ELECTRIC

IP7010067

REHEATER PRESSURE DROP CORRECTION FACTORS
FOR SINGLE REHEAT UNITS

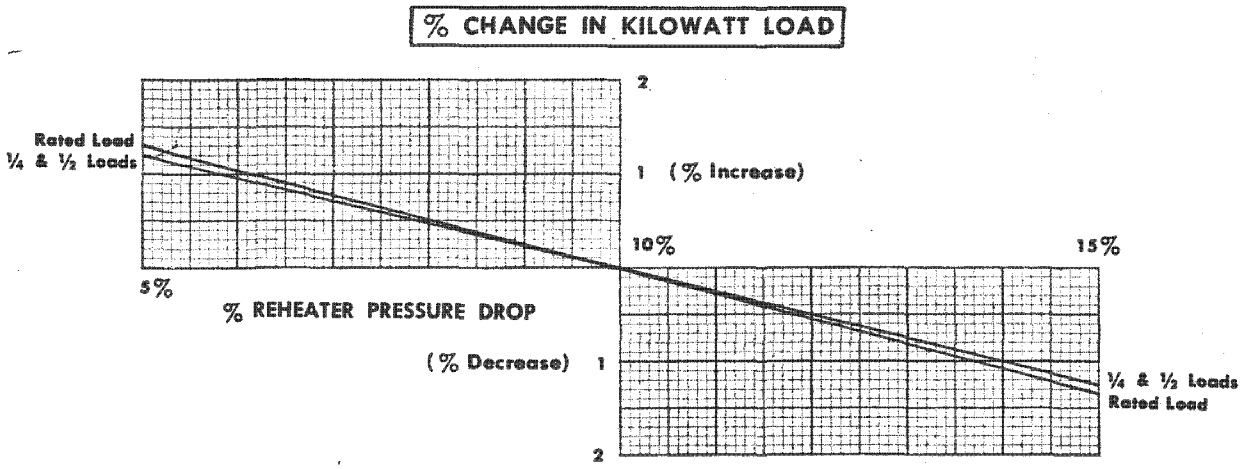

METHOD OF USING CURVES

These correction factors assume constant control valve opening and are to be applied to heat rates and kilowatt loads at rated steam conditions.

1. The heat rate at the desired condition can be found by multiplying the heat rate at rated conditions by the following:

$$1 + \frac{\%\ \text{change in gross heat rate}}{100}$$

2. The kilowatt load at the desired conditions can be found by multiplying the kilowatt load at rated conditions by the following:

$$1 + \frac{\%\ \text{change in kw load}}{100}$$

3. These correction factors are not guaranteed.

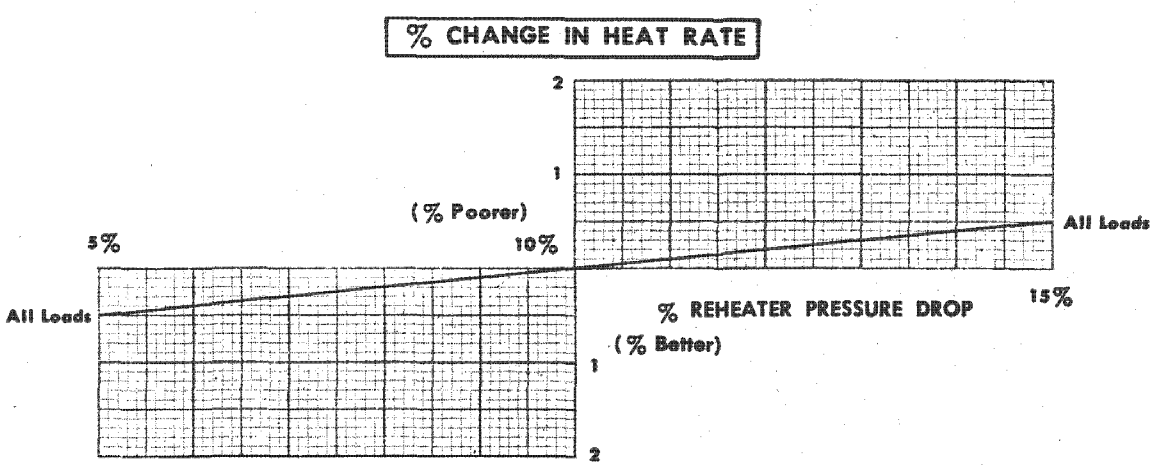

GENERAL ELECTRIC

IP7010068

From Kwok Law
LADWP 10/05/89

GENERAL ELECTRIC

TURBINE-GENERATOR PERFORMANCE
ALTERNATE 1
TABLE OF CONTENTS

	Page
Definition	2-1
Performance	2-2
Data Tabulation	C3-6
Proposition Outline	186C5120
Heat Balances	
Valves Wide Open - 5% Overpressure	477HB165
Valves Wide Open - Normal Pressure	477HB166
Rating	477HB167
0.85 VWO	477HB168
550 MW	477HB169
380 MW	477HB170
Expansion Lines	477HD204
Exhaust Pressure Correction Factors	477HB665
First-Stage Pressure vs. Flow and HP Exhaust Pressure vs. Flow	477HA199
Extraction Stage Pressure Flow	477HA206
HP Turbine ELEP vs. Reheat Turbine Flow	477HA212
Reheat Turbine ELEP vs. Reheat Turbine Flow	477HA213
Exhaust Loss	476HB902
Turbine Heat Rate vs. Auxiliary Turbine Efficiency	477HA197
Pitch Diameter and Valve Pressure Drop	B1-5(M)
Gland Leakages	477HB205
Torsional Spring Mass Model	S2-30
Mode Shapes	S2-30
Six-Flow Turbine Cross Section	GED-6832

LS-1370
MAM 7/14/80

IP7010069

186C5120

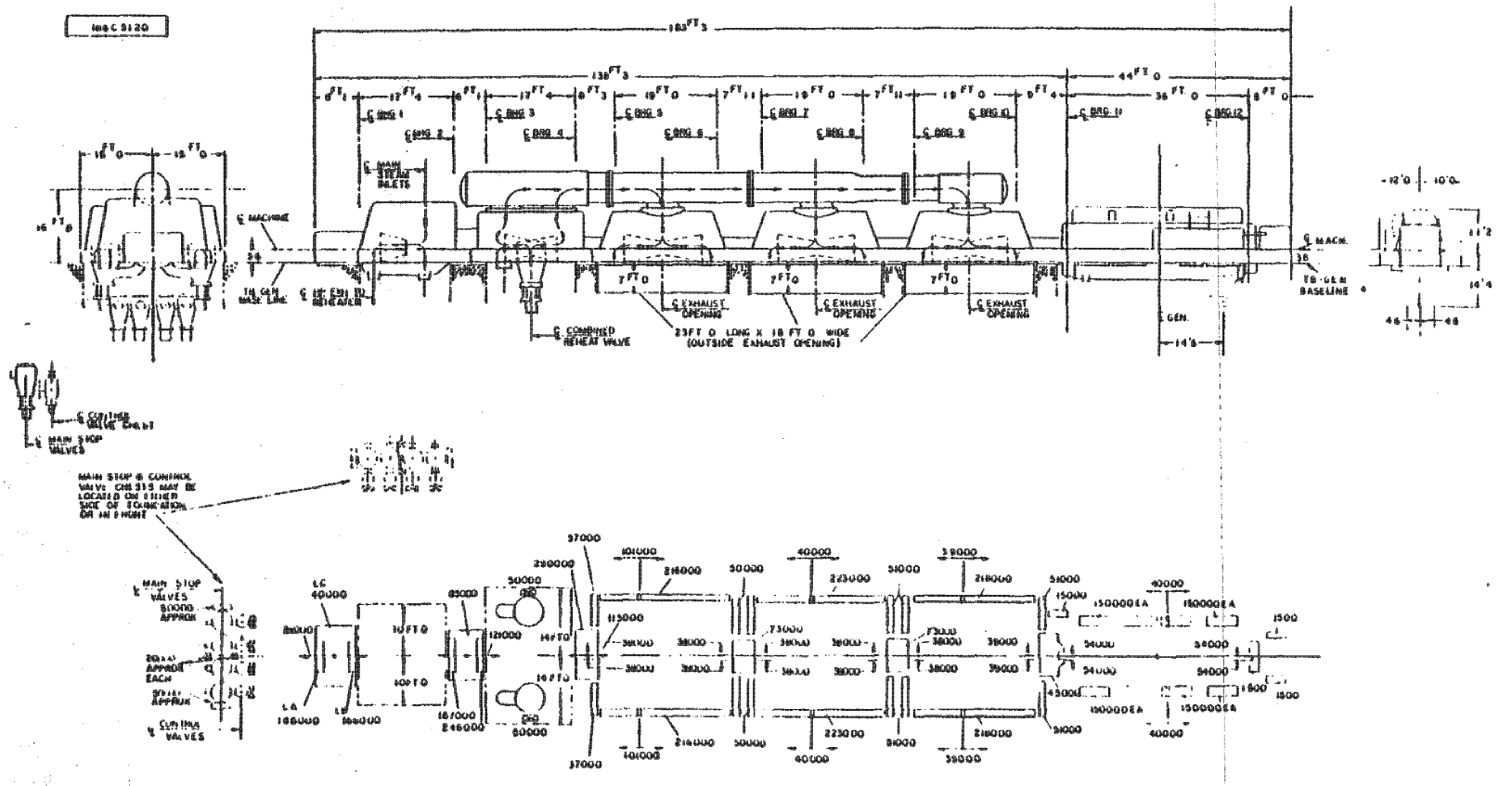

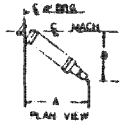

DISTANCE REQ'D TO REMOVE GEN FIELD

METHOD OF REMOVAL	A	B
STRAIGHT PULL	46 FT 0	—
CANTING HORIZONTALLY	38 FT 6	22 FT 6

NOTES:

1. STEAM CONDITIONS - 2400 PSIG - 1000/1000 °F REHEAT WITH 5.0 IN LAST STAGE BUCKETS
2. HEAVIEST PIECE DURING ERECTION - (GENERATOR STATOR) 750000 LBS
   HEAVIEST PIECE AFTER ERECTION - (GENERATOR ROTOR) 170000 LBS
3. LA & LB LOADINGS DO NOT OCCUR SIMULTANEOUSLY BUT ARE SUPERIMPOSED ON LC. THE LA IS ZERO FOR NORMAL OPERATION FOR FULL VALUE OF LA. LOAD LB IS ZERO
4. THE COMBINED REHEAT VALVE ARRANGEMENT INCLUDES THE REHEAT STOP AND INTERCEPT VALVES
5. SHAFT ROTATION IS CLOCKWISE WHEN VIEWED FROM COLLECTOR END OF GENERATOR
6. LOAD VALUES SHOWN ARE FOR TURBINE-GENERATOR UNIT ONLY - ADDITIONAL LOAD CONTRIBUTED BY CONDENSER NOT INCLUDED
7. DISTANCE REQUIRED TO REMOVE MAJOR PARTS - NOT INCLUDING SLINGS:
   A. GENERATOR STATOR - 11 FT 0 FROM TB-GEN BASE LINE WITH TERMINAL BOX ATTACHED
   B. GENERATOR COOLERS - 25 FT 0 FROM TB-GEN BASE LINE
8. THIS OUTLINE SHALL NOT BE USED FOR CONSTRUCTION PURPOSES. THE GENERAL EQUIPMENT ARRANGEMENT, DIMENSIONS AND LOADINGS ARE TO BE CONSIDERED PRELIMINARY AND SUBJECT TO LATER MODIFICATION
9. RECOMMENDED MINIMUM CRANE HOOK HEIGHT ABOVE TB-GEN BASE LINE - 31 FT 6
10. RECOMMENDED MINIMUM FOUNDATION HEIGHT - 40 FT 0

THIS DOCUMENT (INCLUDING THE INFORMATION IT CONTAINS) IS CONFIDENTIAL AND PROPRIETARY TO GENERAL ELECTRIC COMPANY AND IS MADE AVAILABLE SOLELY TO THE RECIPIENT TO AN INQUIRY OR MADE A BID AS A POTENTIAL VENDOR. NO USE PERSON'S CONTRACT WITH GENERAL ELECTRIC. IT MAY NOT BE REPRODUCED OR COPIED EXCEPT TO THE EXTENT NECESSARY TO PERFORM AS SO (A) OR (B) ABOVE AND SHALL BE RETURNED IMMEDIATELY UPON REQUEST. RECIPIENT WILL TAKE ALL REASONABLE STEPS TO PROTECT THIS DOCUMENT AND THE INFORMATION IT CONTAINS.

ALT IIA

PROPOSITION OUTLINE

REV A 6-27-80

STEAM TURBINE GENERATOR UNIT

TURBINE	820000 KW - 3600 RPM - TC6F 30" LSB
GENERATOR	ATB-2-988400 KVA - 3600 RPM - HT-26000V 0.90 PF 0.58 SCR - 60 PSIG H_2 CONDUCTOR COOLED
GENERREX	3265 KW 505 V
APPROVED TB ENGR J MULLEN GEN ENGR J TYLL	DRAWN BY D GAUVIN 6-9-80 INSPECTED
GENERAL ELECTRIC SCHENECTADY WORKS	186C5120

11128047

IP7010070

1 Pg
from M. Kalejs

TO: J. Reilly 8-453-5275
5154

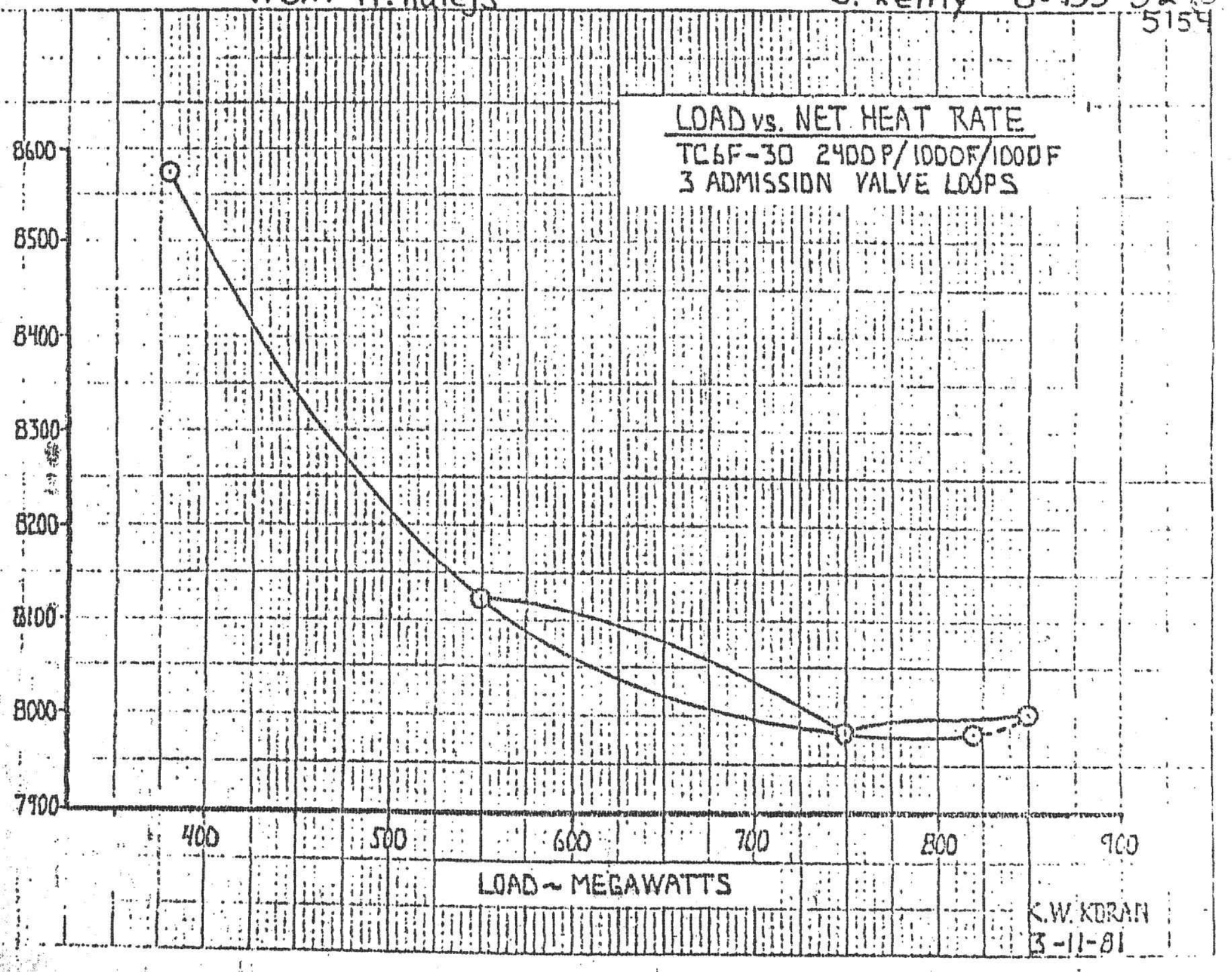

MAR 10 1981
J. F. REILLY

IP7010071

SUBMITTAL V
HB W/ DESIGN CHANGES

481 HB 784

FOR STUDY PURPOSES ONLY

TURBINE AND EXTRACTION ARRANGEMENT IS SCHEMATIC ONLY

CALCULATED DATA - NOT GUARANTEED

RATING FLOW IS 5831171. M AT INLET STEAM CONDITIONS OF 2412.2 PSIA AND 1000.0 T
TO ASSURE THAT THE TURBINE WILL PASS THIS FLOW, CONSIDERING VARIATIONS IN FLOW COEFFICIENTS FROM EXPECTED VALUES, SHOP TOLERANCES ON DRAWING AREAS, ETC. WHICH MAY AFFECT THE FLOW, THE TURBINE IS BEING DESIGNED FOR A DESIGN FLOW (RATING FLOW PLUS 5.0 PERCENT) OF 6122730. M
THE EQUIVALENT DESIGN FLOW AT 2532.2 PSIA AND 1000.0 T IS 6449000 M
THE VALUE OF GENERATOR OUTPUT SHOWN ON THIS HEAT BALANCE IS AFTER ALL POWER FOR EXCITATION AND OTHER TURBINE-GENERATOR AUXILIARIES HAS BEEN DEDUCTED.

BFP: 2 Turbine drive
Standby: Motor drive.

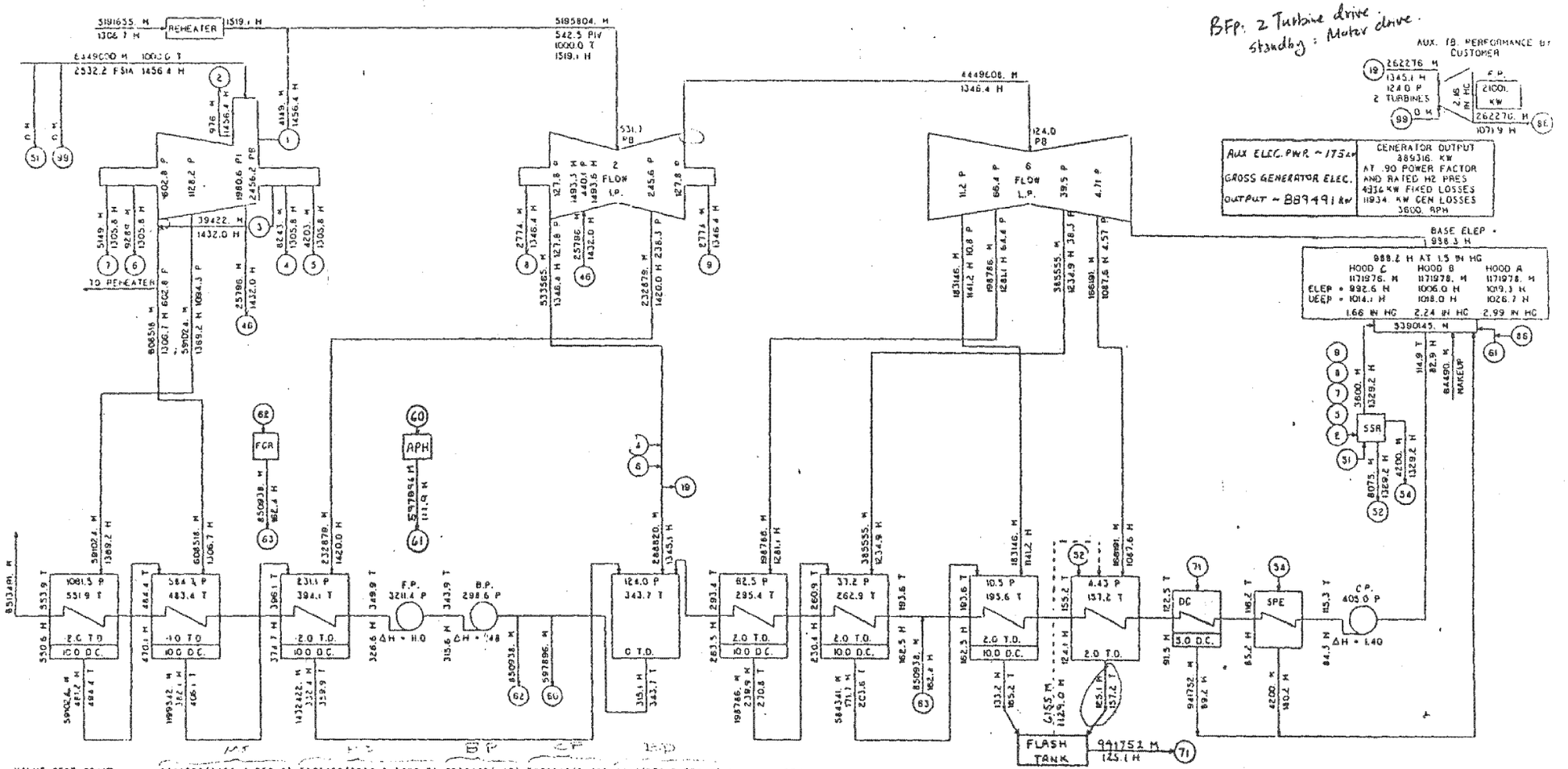

VALVE BEST POINT NET HEAT RATE (CUSTOMER'S DEFINITION) = $\frac{6449000(1456.4-550.6)+5191655(1519.1-1306.7)+6513491(.48)+5390145(1.40)+6449(720.5-550.6)}{889316}$ = 7821.7 $\frac{BTU}{KW\text{-}HR}$

LEGEND - CALCULATIONS BASED ON 1987 ASME STEAM TABLES
M - FLOW-LB/HR
P - PRESSURE-PSIA
H - ENTHALPY-BTU/LB
T - TEMPERATURE-F DEGREES

TC6F 30.0 IN LSB 3600 RPM
2400.0 PSIA 1000. / 1000. T
GEN- 991000. KVA 90 PF LIQ

Karl K Mayer

1 GENERAL ELECTRIC COMPANY SCHENECTADY N.Y.

VWO + OP

CHANGES:
1. Utilize APH at all loads
2. FW FOR APH RETURNS TO CONDENSER (INSTEAD OF DEAERATOR)
3. FW FOR FGR RETURNS TO UPSTREAM OF LPH#2 (INSTEAD OF DEAERATOR)
4. ADD FLASH TANK BETWEEN LPH 1 & 2.
5. Add DRAIN COOLER

481 HB 784

6/10/82

IP7010072

486 HB 249

TURBINE AND EXTRACTION ARRANGEMENT IS SCHEMATIC ONLY

CALCULATED DATA - NOT GUARANTEED

RATING FLOW IS 583117. M AT INLET STEAM CONDITIONS OF 2412.2 PSIA AND 1000.0 T TO ASSURE THAT THE TURBINE WILL PASS THIS FLOW, CONSIDERING VARIATIONS IN FLOW COEFFICIENTS FROM EXPECTED VALUES, SHOP TOLERANCES ON DRAWING AREAS, ETC. WHICH MAY AFFECT THE FLOW, THE TURBINE IS BEING DESIGNED FOR A DESIGN FLOW (RATING FLOW PLUS 5.0 PERCENT) OF 6122730. M

THE VALUE OF GENERATOR OUTPUT SHOWN ON THIS HEAT BALANCE IS AFTER ALL POWER FOR EXCITATION AND OTHER TURBINE-GENERATOR AUXILIARIES HAS BEEN DEDUCTED.

FOR STUDY PURPOSES ONLY

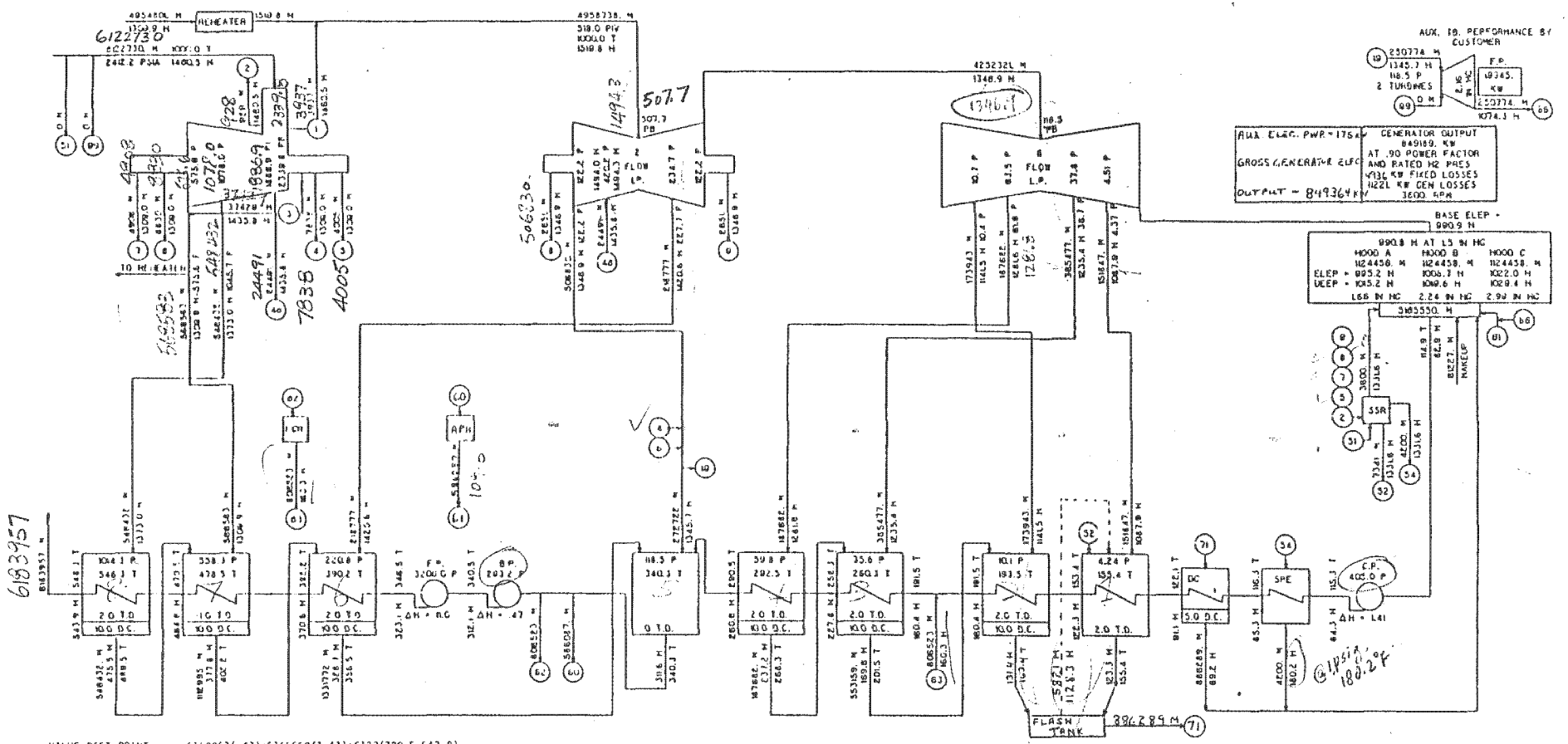

VALVE BEST POINT NET HEAT RATE (CUSTOMER'S DEFINITION)

$$= \frac{+6183957(.47)+5165550(1.41)+6123(720.5-543.9) + 6122730(1460.5-543.9)+49546(1519.8-1309.9)}{849189} = 7846.8 \ \frac{BTU}{KW\text{-}HR}$$

LEGEND - CALCULATIONS BASED ON 1967 ASME STEAM TABLES
M - FLOW-LB/HR
P - PRESSURE-PSIA
H - ENTHALPY-BTU/LB
T - TEMPERATURE-F DEGREES

307ET 1 0 8

TC6F 30.0 IN. LSB 3600 RPM
2400.0 PSIA 1000. / 1000. T
GEN- 991000. KVA .90 PF LIQ

K.K. Majm
15/24/82

GENERAL ELECTRIC COMPANY, SCHENECTADY N.Y.

486 HB 249

VWO+ NP

IP7010073

481 NB 786

FOR STUDY PURPOSES ONLY

TURBINE AND EXTRACTION ARRANGEMENT IS SCHEMATIC ONLY

CALCULATED DATA - NOT GUARANTEED

RATING FLOW IS 5831071. M AT INLET STEAM CONDITIONS OF 2412.2 PSIA AND 1000.0 T TO ASSURE THAT THE TURBINE WILL PASS THIS FLOW, CONSIDERING VARIATIONS IN FLOW COEFFICIENTS FROM EXPECTED VALUES, SHOP TOLERANCES ON DRAWING AREAS, ETC. WHICH MAY AFFECT THE FLOW, THE TURBINE IS BEING DESIGNED FOR A DESIGN FLOW RATING FLOW PLUS 5.0 PERCENT OF 6122730. M. THE VALUE OF GENERATOR OUTPUT SHOWN ON THIS HEAT BALANCE IS AFTER ALL POWER FOR EXCITATION AND OTHER TURBINE-GENERATOR AUXILIARIES HAS BEEN DEDUCTED.

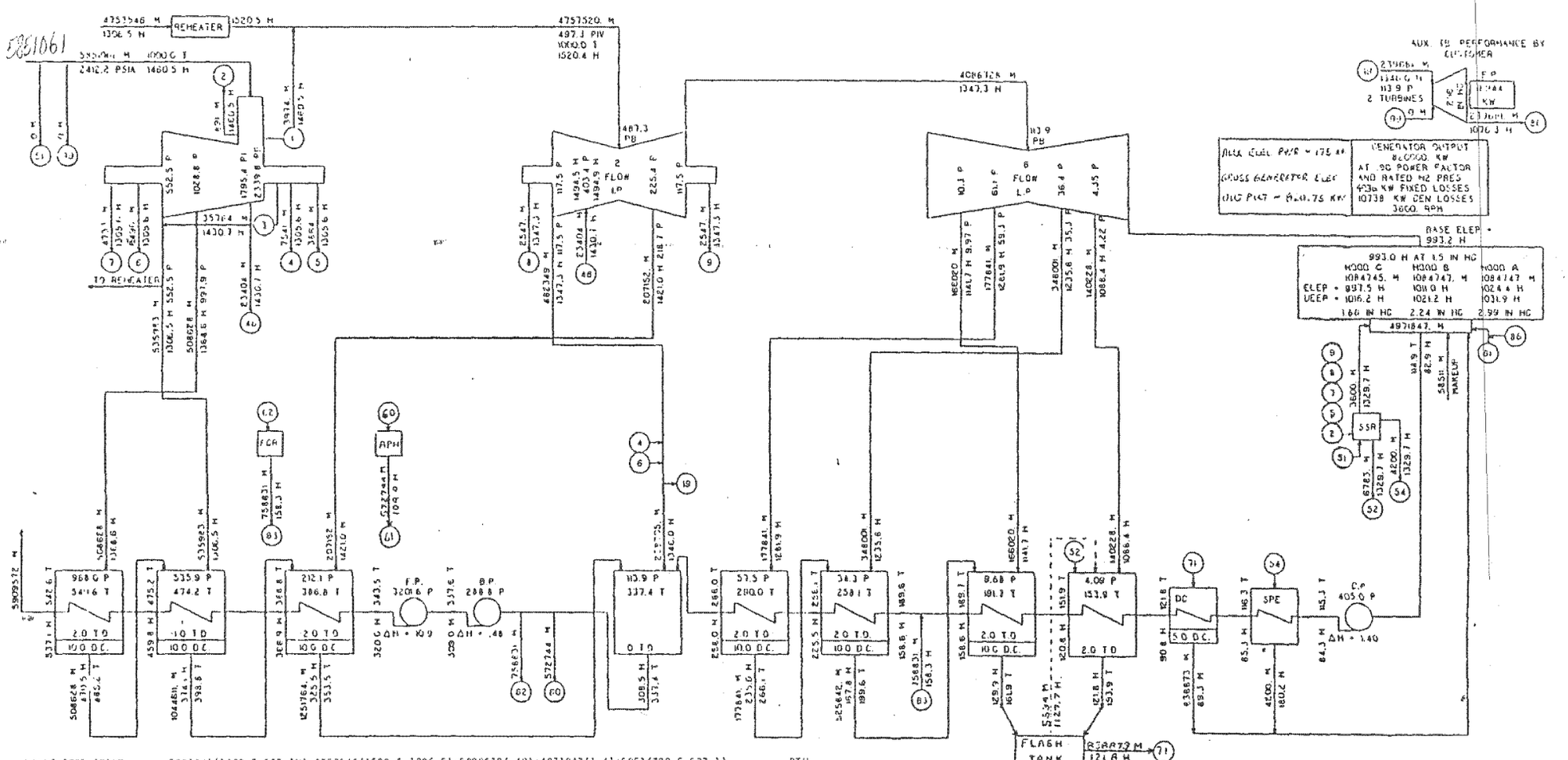

GENERAL ELECTRIC COMPANY, SCHENECTADY N.Y.

481 NB 781

IP7010074

481 HB 785

FOR STUDY PURPOSES ONLY

TURBINE AND EXTRACTION ARRANGEMENT IS SCHEMATIC ONLY

THE VALUE OF GENERATOR OUTPUT SHOWN ON THIS HEAT BALANCE IS AFTER ALL POWER FOR EXCITATION AND OTHER TURBINE-GENERATOR AUXILIARIES HAS BEEN DEDUCTED.

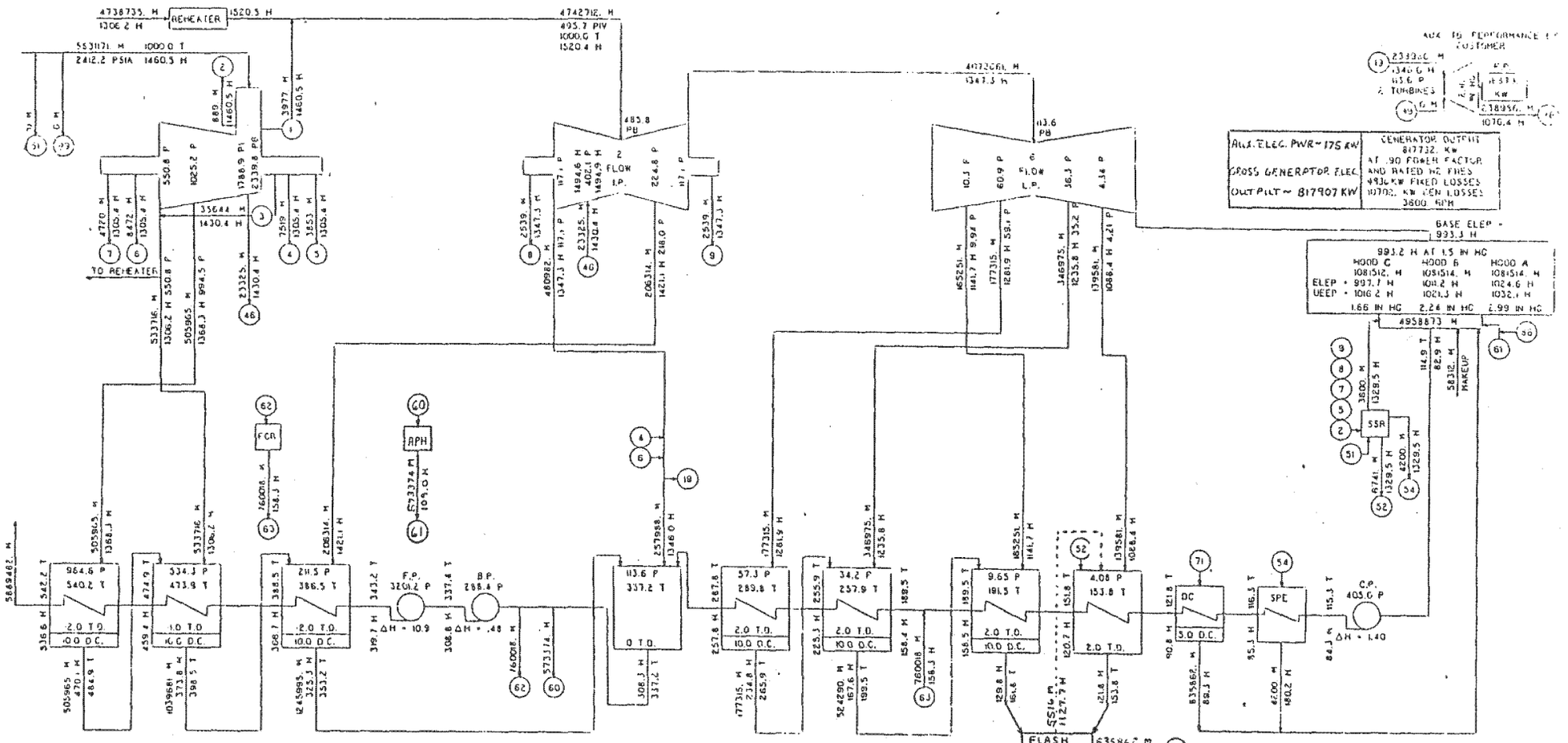

VALVE BEST POINT NET HEAT RATE (CUSTOMER'S DEFINITION) $= \frac{5831171(1460.5-536.6)+4738735(1520.5-1306.2)+5829482(.48)+4958873(1.4)+5831(720.5-536.6)}{817732} = 7843.4 \frac{BTU}{KW\text{-}HR}$

LEGEND - CALCULATIONS BASED ON 1967 ASME STEAM TABLES
M - FLOW-LB/HR
P - PRESSURE-PSIA
H - ENTHALPY-BTU/LB
T - TEMPERATURE-F DEGREES

TOBF 30.0 IN. LSB 3600 RPM
2400.0 PSIA 1000. / 1000. T
GEN- 991000. KVA 90 FF LIQ

74KT 1 0 3

Karl K. Majoy

CENERAL ELECTRIC COMPANY SCHENECTADY N.Y.

481 HB 785

6/10/72

100% MSF
Main, Steam Flow

IP7010075

481 HB 787

FOR STUDY PURPOSES ONLY

TURBINE AND EXTRACTION ARRANGEMENT IS SCHEMATIC ONLY

THE VALUE OF GENERATOR OUTPUT SHOWN ON THIS HEAT BALANCE IS AFTER ALL POWER FOR EXCITATION AND OTHER TURBINE-GENERATOR AUXILIARIES HAS BEEN DEDUCTED

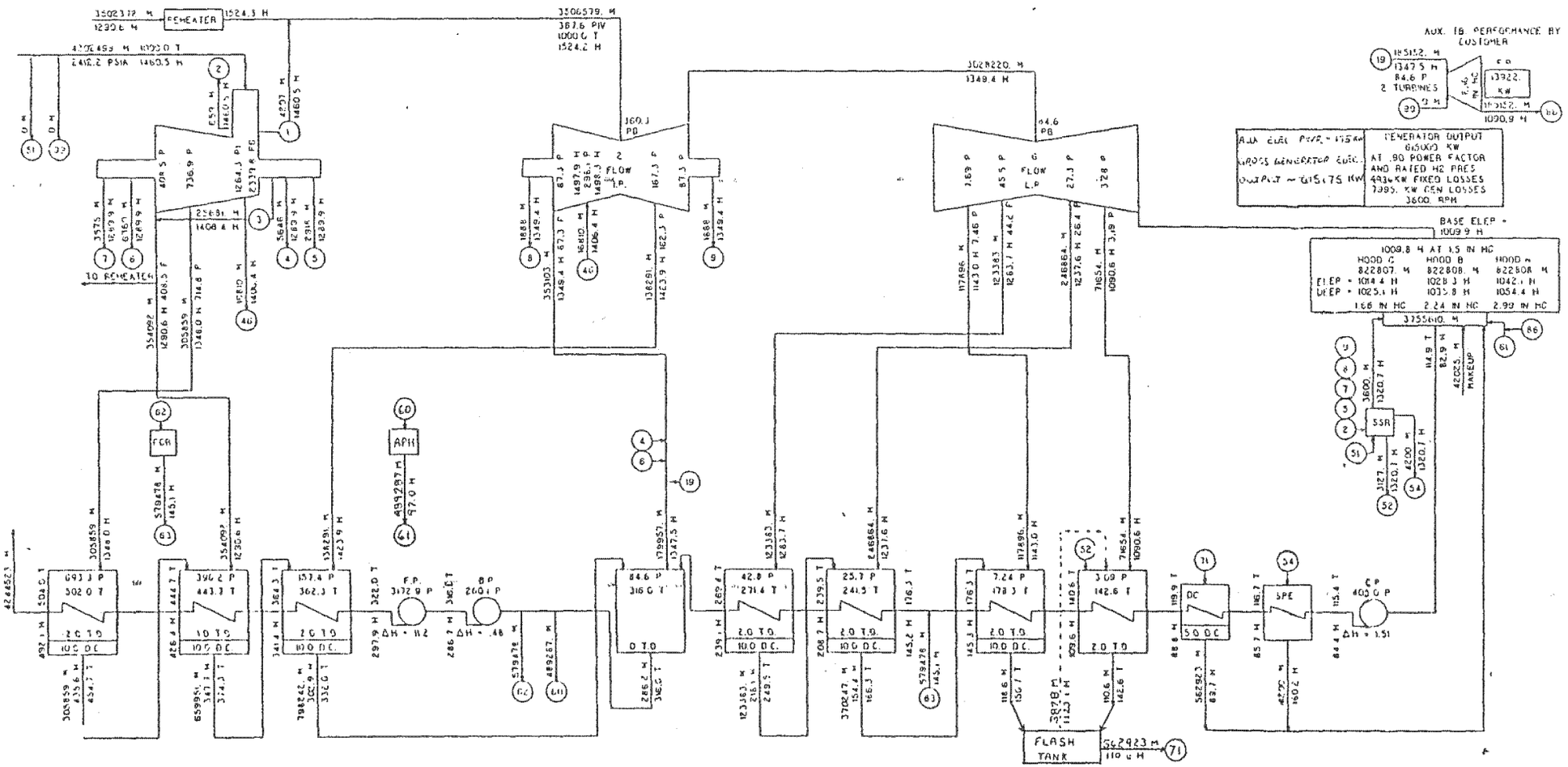

VALVE BEST POINT NET HEAT RATE (CUSTOMER'S DEFINITION) = $\frac{4202498(1460.5-492.1)+3502372(1524.3-1290.6)+4244523(.48)+3755610(1.51)+4202(720.5-492.1)}{615000}$ = 7962.4 $\frac{BTU}{KW-HR}$

LEGEND CALCULATIONS BASED ON 1967 ASME STEAM TABLES
M - FLOW-LB/HR
P - PRESSURE-PSIA
H - ENTHALPY-BTU/LB
T - TEMPERATURE-F DEGREES

76IKT 1 0 5

TC6F 30.0 IN. LSB 3600 RPM
2400.0 PSIA 1000. / 1000. F
GEN- 991000. KVA 90 PF LIQ

Kurt K Mayer

GENERAL ELECTRIC COMPANY SCHENECTADY N.Y.

481 HB 787 6/10/82

75%

IP7010076

481 HB 388

TURBINE AND EXTRACTION ARRANGEMENT IS SCHEMATIC ONLY

FOR STUDY PURPOSES ONLY

THE VALUE OF GENERATOR OUTPUT SHOWN ON THIS HEAT BALANCE IS AFTER ALL POWER FOR EXCITATION AND OTHER TURBINE-GENERATOR AUXILIARIES HAS BEEN DEDUCTED

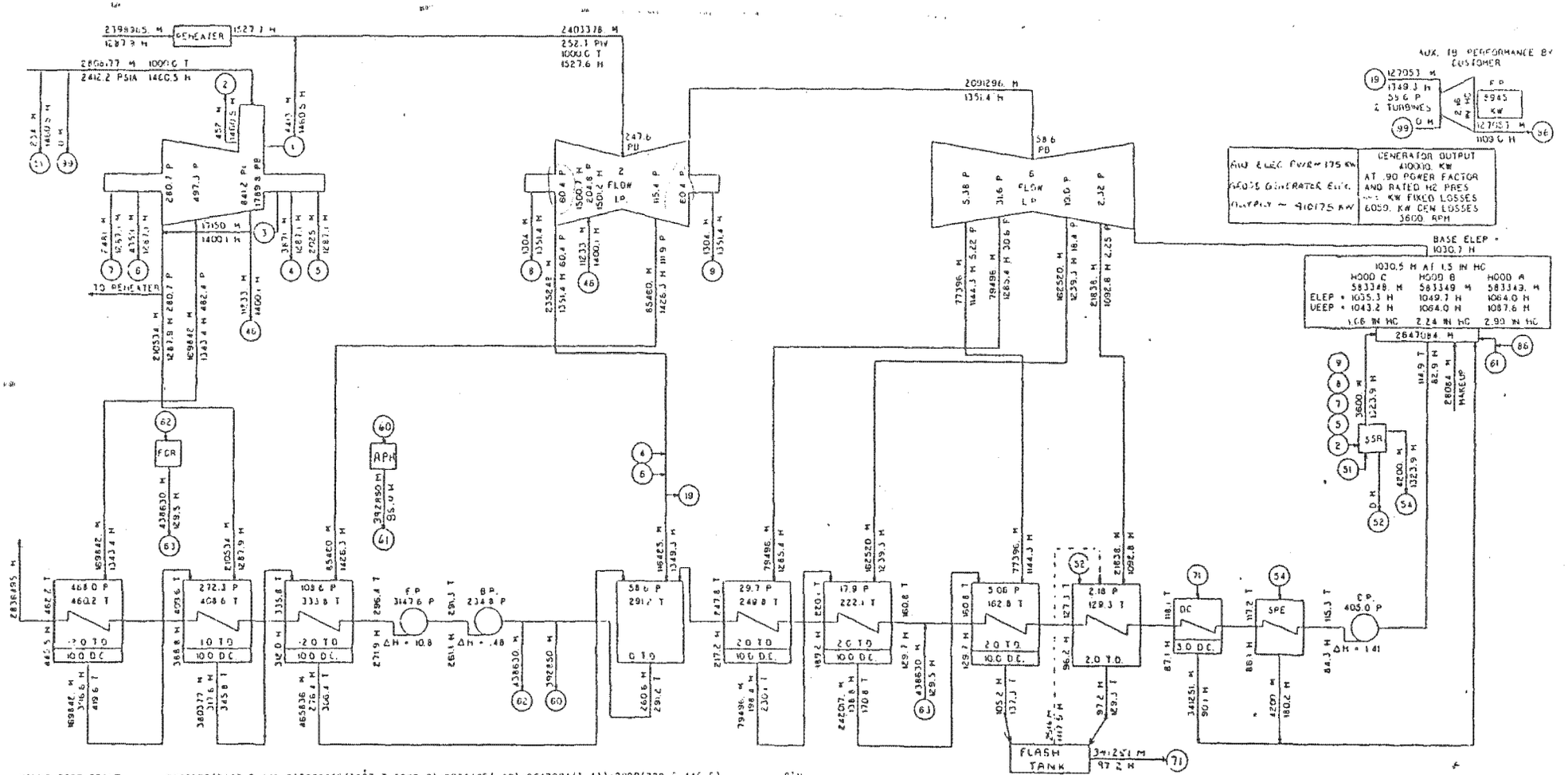

VALVE BEST POINT NET HEAT RATE (CUSTOMER'S DEFINITION)

$$= \frac{2808177(1460.5-435.5)2398965(1527.7-1287.9)+2836495(.48)+2647084(1.41)+2808(720.5-445.5)}{410000} = 8369.4 \ \frac{BTU}{KW\text{-}HR}$$

LEGEND - CALCULATIONS BASED ON 1967 ASME STEAM TABLES
M - FLOW-LB/HR
P - PRESSURE-PSIA
H - ENTHALPY-BTU/LB
T - TEMPERATURE-F DEGREES

74KT 1 0 6

TC6F 30.0 IN. LSB 3600 RPM
2400.0 PSIA 1000. / 1000. 1
GEN: 991000. KVA 90 PF LIQ

GENERAL ELECTRIC COMPANY, SCHENECTADY N.Y.

481 HB 388

6/10/82

50%

IP7010077

481 HB 789

FOR STUDY PURPOSES ONLY

TURBINE AND EXTRACTION ARRANGEMENT IS SCHEMATIC ONLY

THE VALUE OF GENERATOR OUTPUT SHOWN ON THIS HEAT BALANCE IS AFTER ALL POWER FOR EXCITATION AND OTHER TURBINE-GENERATOR AUXILIARIES HAS BEEN DEDUCTED

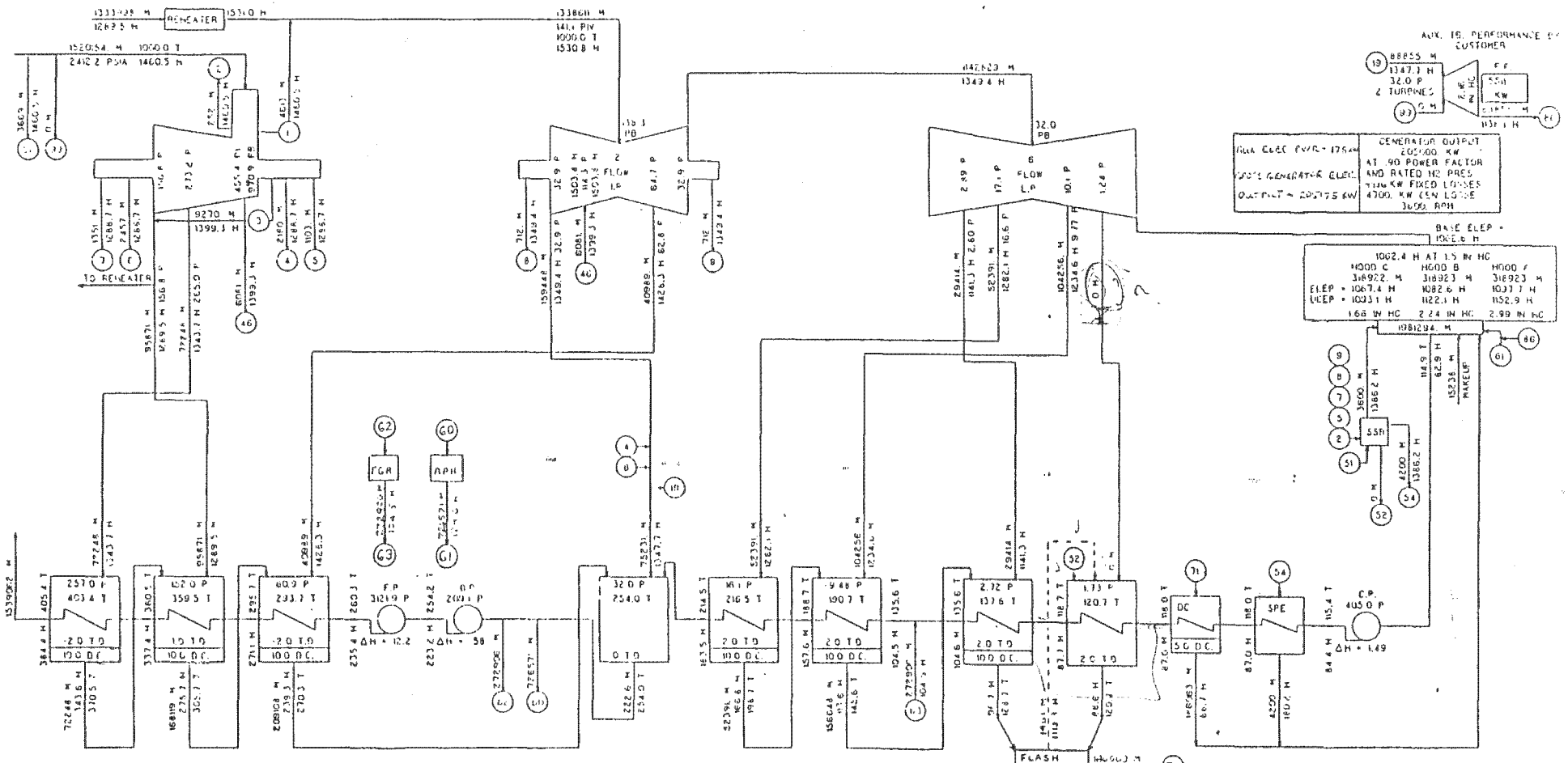

VALVE BEST POINT NET HEAT RATE (CUSTOMER'S DEFINITION) = $\frac{1520154(1460.5-384.4)+1333998(1531.0-1289.5)+1539062(.65)+1981294(1.49)+1520(720.5-384.4)}{205000} = 9072.5$ BTU/KW-HR

GENERAL ELECTRIC COMPANY, SCHENECTADY N.Y.

481 HB 789

6/10/82

25%

IP7010078

INITIAL PRESSURE CORRECTION FACTORS

FOR SINGLE REHEAT UNITS

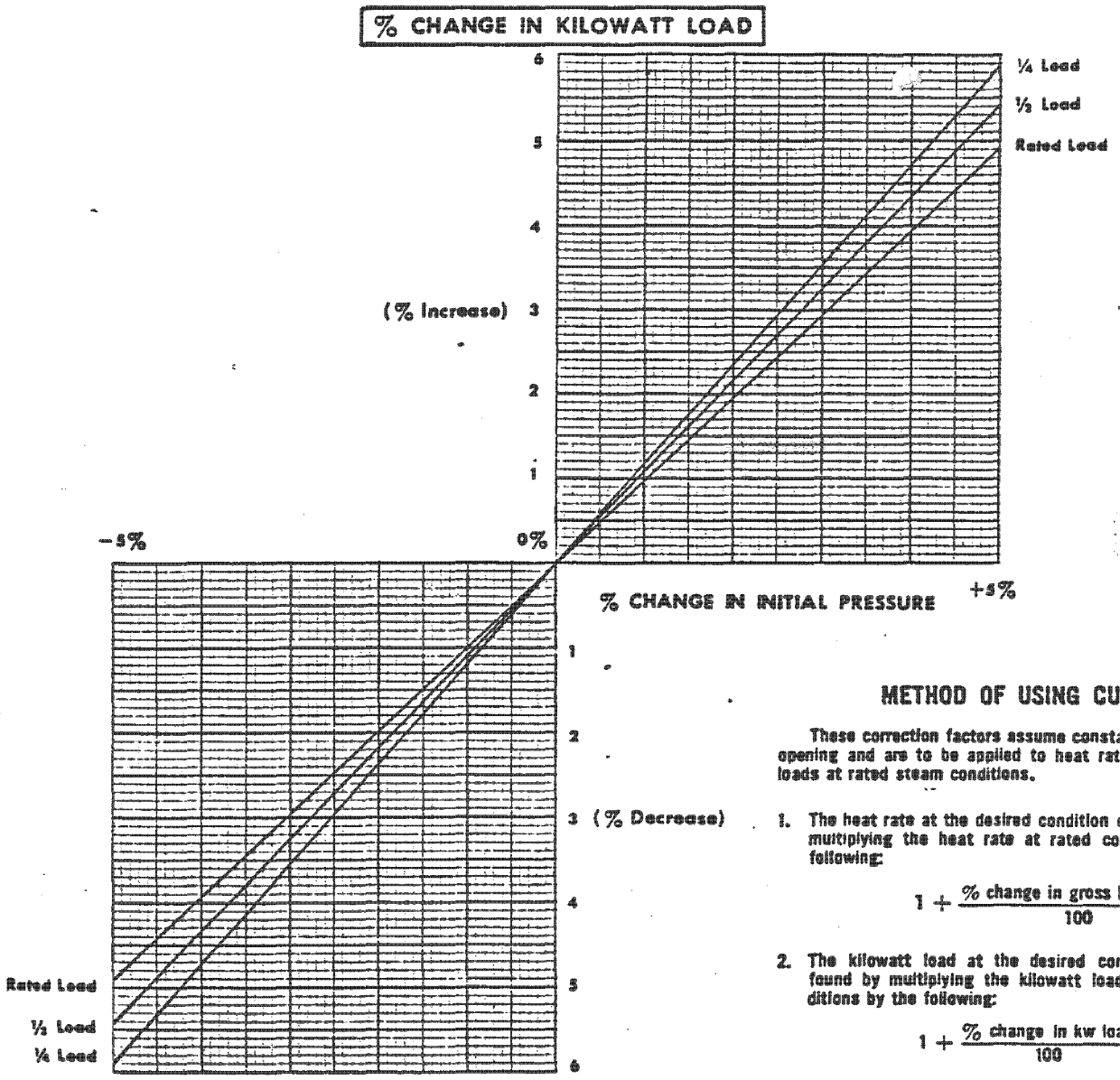

METHOD OF USING CURVES

These correction factors assume constant control valve opening and are to be applied to heat rates and kilowatt loads at rated steam conditions.

1. The heat rate at the desired condition can be found by multiplying the heat rate at rated conditions by the following:

$$1 + \frac{\%\ \text{change in gross heat rate}}{100}$$

2. The kilowatt load at the desired conditions can be found by multiplying the kilowatt load at rated conditions by the following:

$$1 + \frac{\%\ \text{change in kw load}}{100}$$

[redacted]

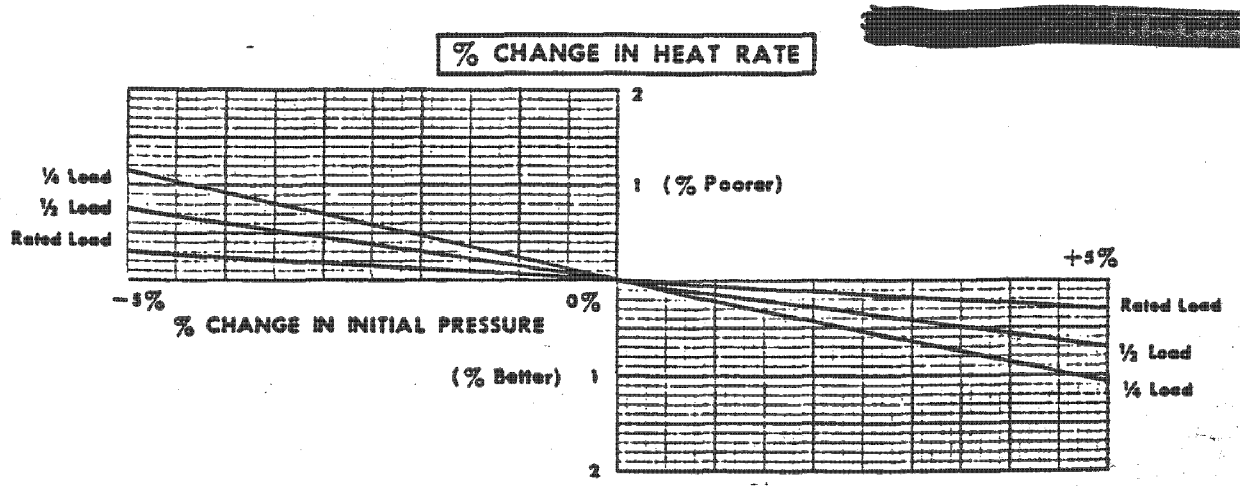

GENERAL ELECTRIC

IP7010079

INITIAL TEMPERATURE CORRECTION FACTORS

FOR SINGLE REHEAT—SUBCRITICAL PRESSURE UNITS

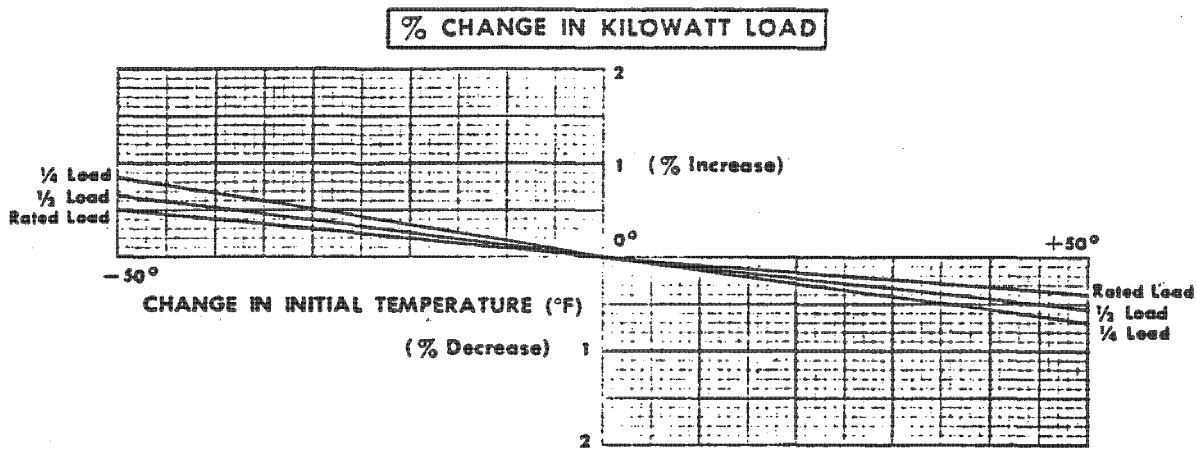

METHOD OF USING CURVES

These correction factors assume constant control valve opening and are to be applied to heat rates and kilowatt loads at rated steam conditions.

1. The heat rate at the desired condition can be found by multiplying the heat rate at rated conditions by the following:

$$1 + \frac{\%\ \text{change in gross heat rate}}{100}$$

2. The kilowatt load at the desired conditions can be found by multiplying the kilowatt load at rated conditions by the following:

$$1 + \frac{\%\ \text{change in kw load}}{100}$$

[redacted]

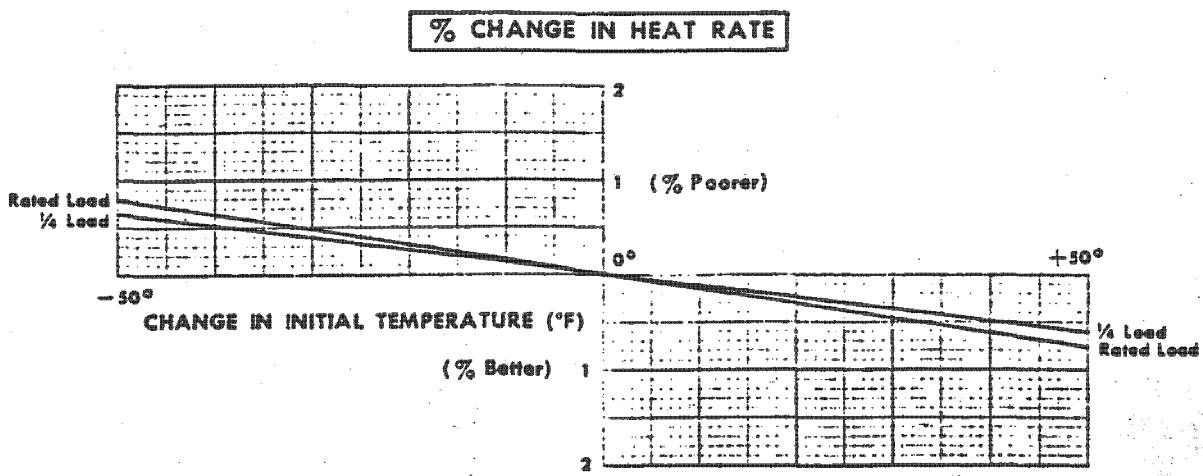

GENERAL ELECTRIC
IP7010080

REHEAT TEMPERATURE CORRECTION FACTORS

FOR SINGLE REHEAT UNITS

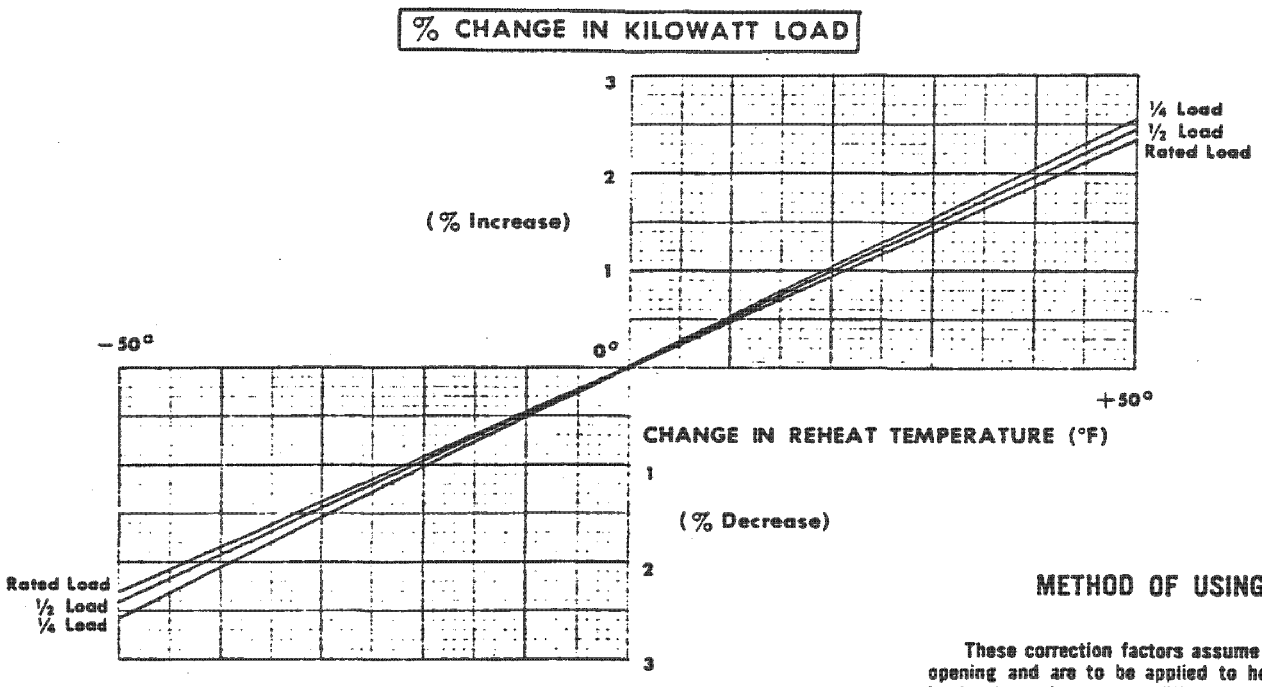

METHOD OF USING CURVES

These correction factors assume constant control valv opening and are to be applied to heat rates and kilowat loads at rated steam conditions.

1. The heat rate at the desired condition can be found b multiplying the heat rate at rated conditions by th following:

$$1 + \frac{\%\text{ change in gross heat rate}}{100}$$

2. The kilowatt load at the desired conditions can b found by multiplying the kilowatt load at rated con ditions by the following:

$$1 + \frac{\%\text{ change in kw load}}{100}$$

[redacted]

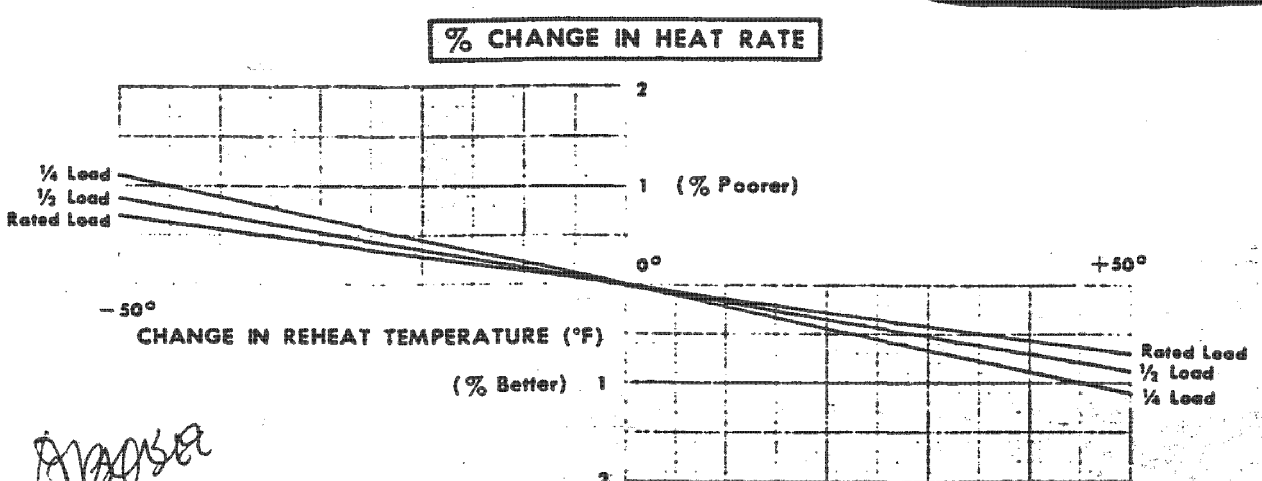

Obsolete

[redacted] OBSOLETE

GENERAL ELECTRIC

IP7010081

REHEAT TEMPERATURE CORRECTION FACTORS

FOR SINGLE REHEAT UNITS

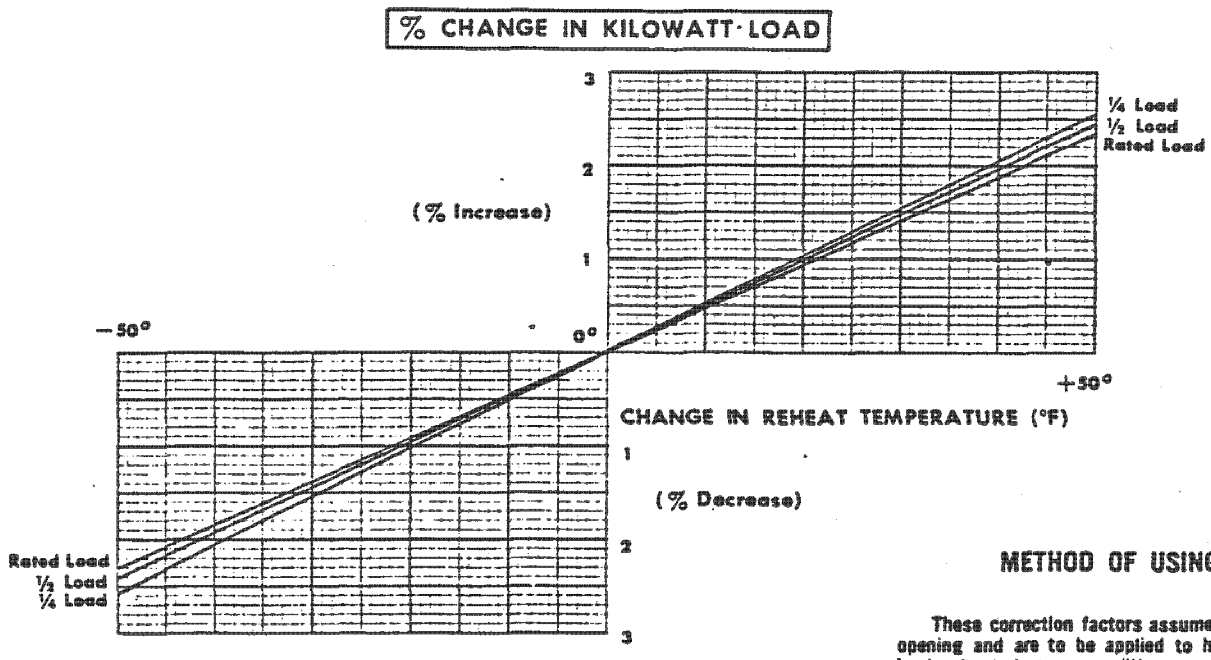

METHOD OF USING CURVES

These correction factors assume constant control valve opening and are to be applied to heat rates and kilowatt loads at rated steam conditions.

1. The heat rate at the desired condition can be found by multiplying the heat rate at rated conditions by the following:

$$1 + \frac{\%\ \text{change in gross heat rate}}{100}$$

2. The kilowatt load at the desired conditions can be found by multiplying the kilowatt load at rated conditions by the following:

$$1 + \frac{\%\ \text{change in kw load}}{100}$$

3. These correction factors are not guaranteed.

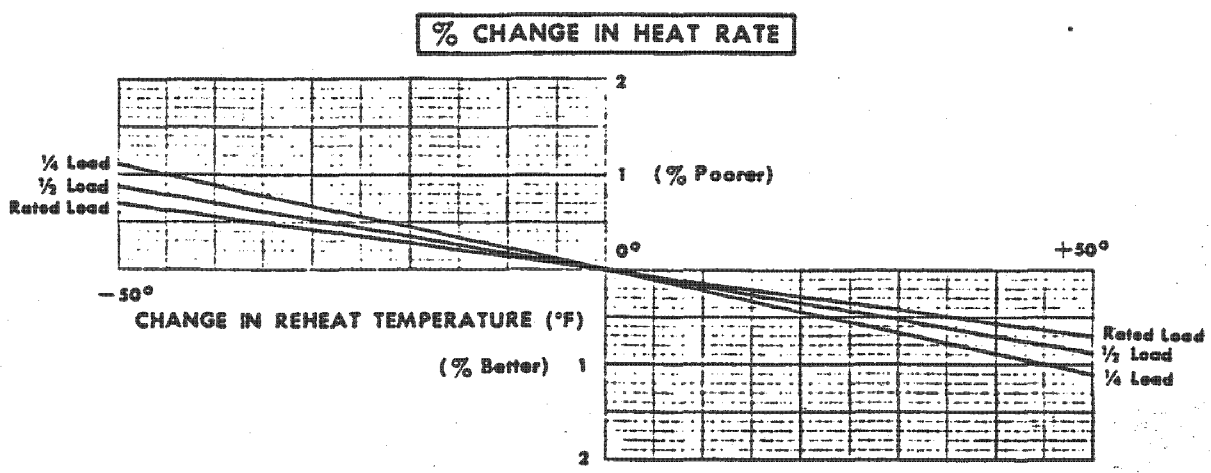

GENERAL ELECTRIC

IP7010082

REHEATER PRESSURE DROP CORRECTION FACTORS

FOR SINGLE REHEAT UNITS

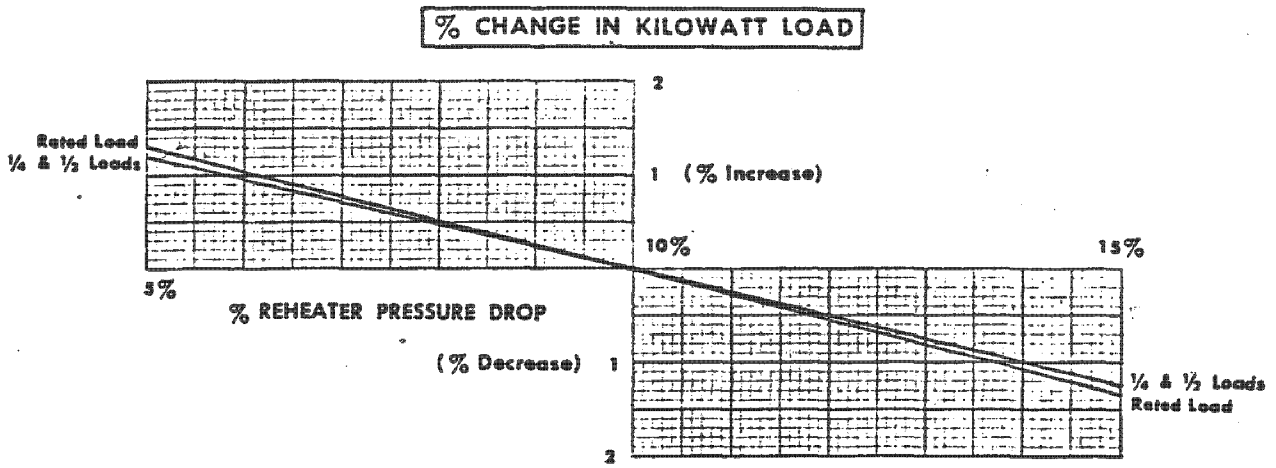

METHOD OF USING CURVES

These correction factors assume constant control valve opening and are to be applied to heat rates and kilowatt loads at rated steam conditions.

1. The heat rate at the desired condition can be found by multiplying the heat rate at rated conditions by the following:

$$1 + \frac{\%\ \text{change in gross heat rate}}{100}$$

2. The kilowatt load at the desired conditions can be found by multiplying the kilowatt load at rated conditions by the following:

$$1 + \frac{\%\ \text{change in kw load}}{100}$$

[redacted]

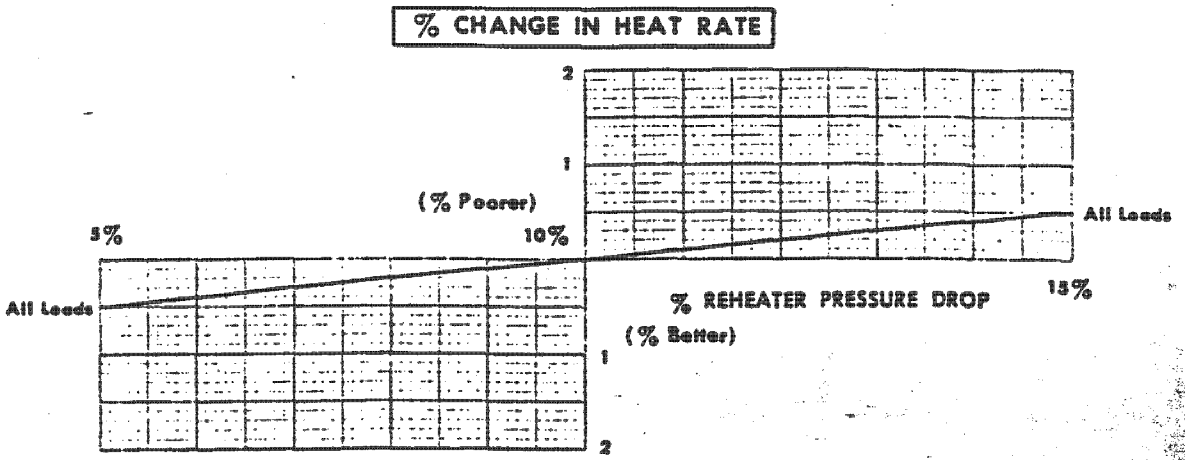

GENERAL ELECTRIC

IP7010083

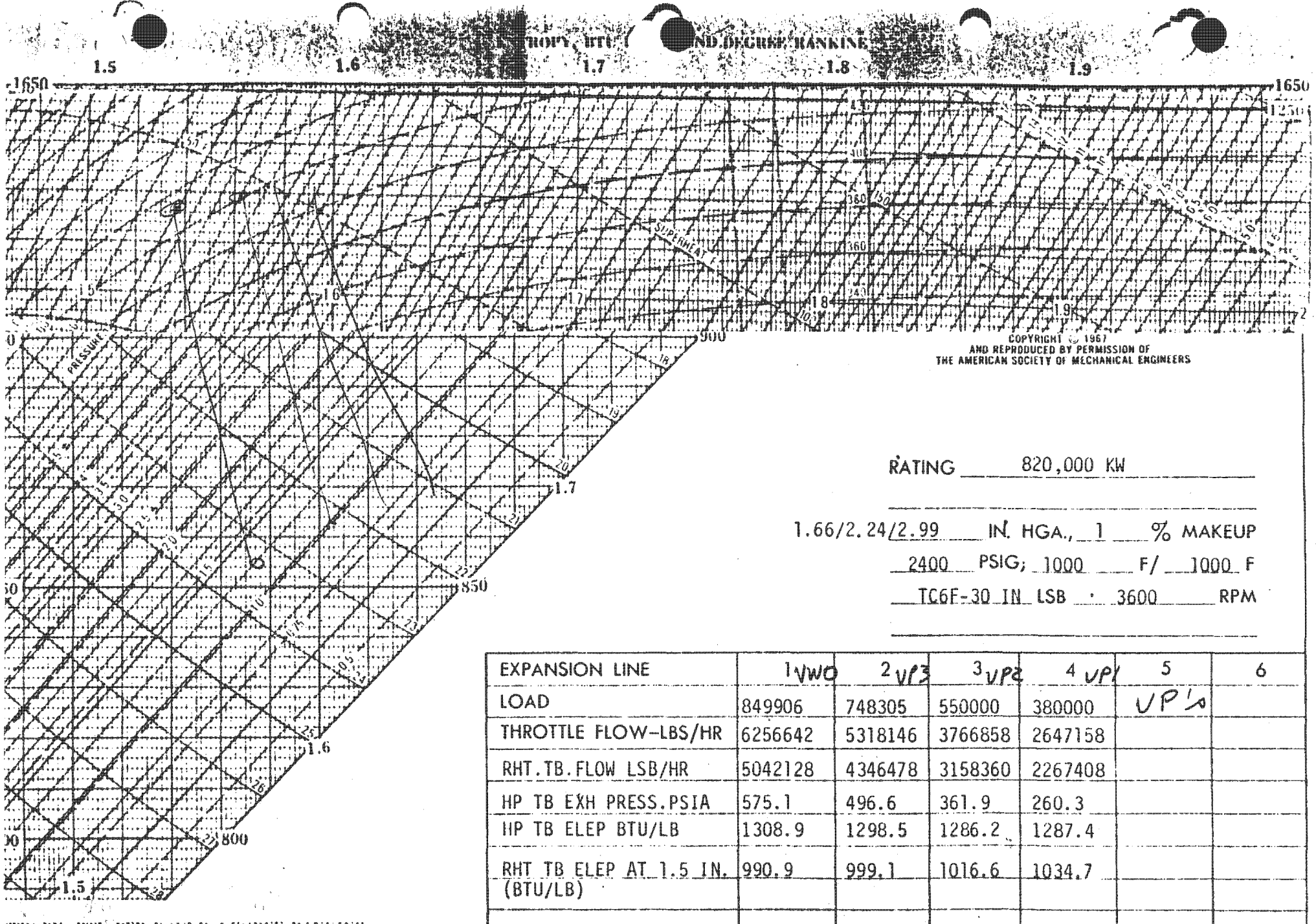

RATING 820,000 KW

1.66/2.24/2.99 IN. HGA., 1 % MAKEUP

2400 PSIG; 1000 F/ 1000 F

TC6F-30 IN LSB · 3600 RPM

EXPANSION LINE	1 VWO	2 VP3	3 VP2	4 VP1	5	6
LOAD	849906	748305	550000	380000	VP's	
THROTTLE FLOW-LBS/HR	6256642	5318146	3766858	2647158		
RHT.TB.FLOW LSB/HR	5042128	4346478	3158360	2267408		
HP TB EXH PRESS.PSIA	575.1	496.6	361.9	260.3		
HP TB ELEP BTU/LB	1308.9	1298.5	1286.2	1287.4		
RHT TB ELEP AT 1.5 IN. (BTU/LB)	990.9	999.1	1016.6	1034.7		

GENERAL ELECTRIC

BY F. GAWRON

DATE 1/20/81

478HD167

IP7010084

[redacted]

820000 KW [redacted].
TC6F-30 IN. LSB
2400 PSIG 1000/1000 T

452 HB 665

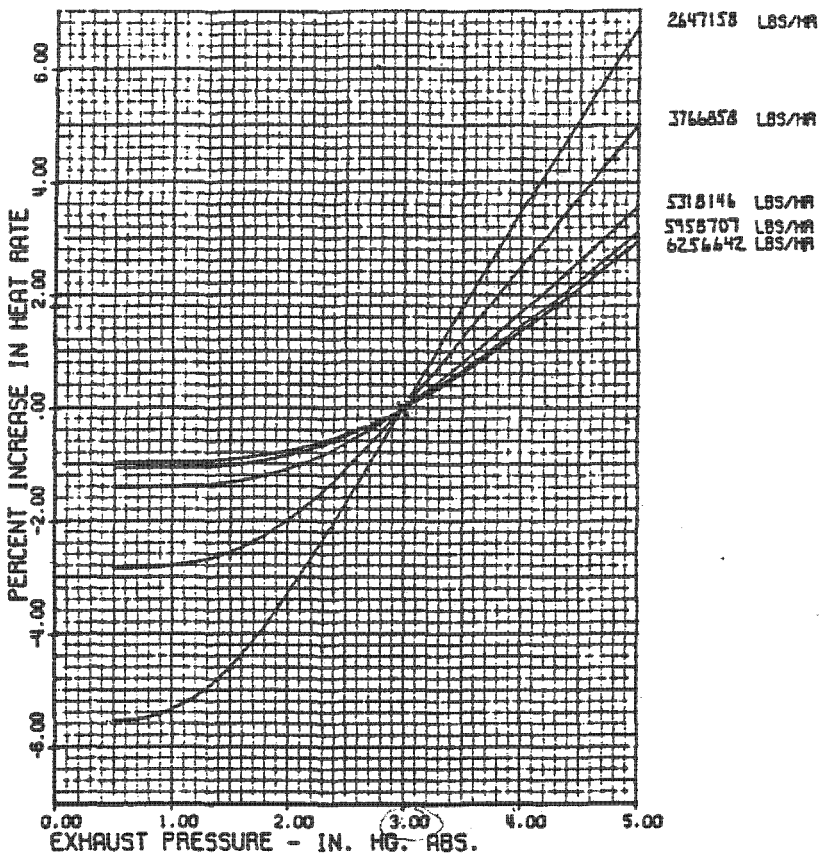

METHOD OF USING CURVE

FLOWS NEAR CURVES ARE THROTTLE FLOWS AT 2400 PSIG 1000 F
THESE CORRECTION FACTORS ASSUME CONSTANT CONTROL VALVE OPENING
APPLY CORRECTIONS TO HEAT RATES AND KW LOADS
AT 1.66/2.24/2.99 IN. HG ABS.

THE PERCENT CHANGE IN KW LOAD FOR VARIOUS EXHAUST PRESSURES IS EQUAL TO
(MINUS PCT INCREASE IN HEAT RATE)100/(100 + PCT INCREASE IN HEAT RATE)

THESE CORRECTION FACTORS ARE NOT GUARANTEED

PRESSURES ALONG ABSCISSA ARE PRESSURES IN HOOD A

PRESSURE(IN.HG.ABS) FOR	HOOD A	HOOD B	HOOD C
	.50	.34	.23
	1.00	.71	.50
	1.50	1.09	.78
	2.00	1.47	1.07
	2.50	1.85	1.36
	3.00	2.24	1.66
	3.50	2.63	1.96
	4.00	3.03	2.27
	4.50	3.42	2.58
	5.00	3.82	2.89

$\Delta\%_{KW} = \frac{-\Delta\%_{HR} \times 100}{(100 + \%_{HR})}$ @ VARIOUS P

452 HB 665

Kw Koran [redacted]

GENERAL ELECTRIC COMPANY, SCHENECTADY, NEW YORK 07/11/80

IP7010085

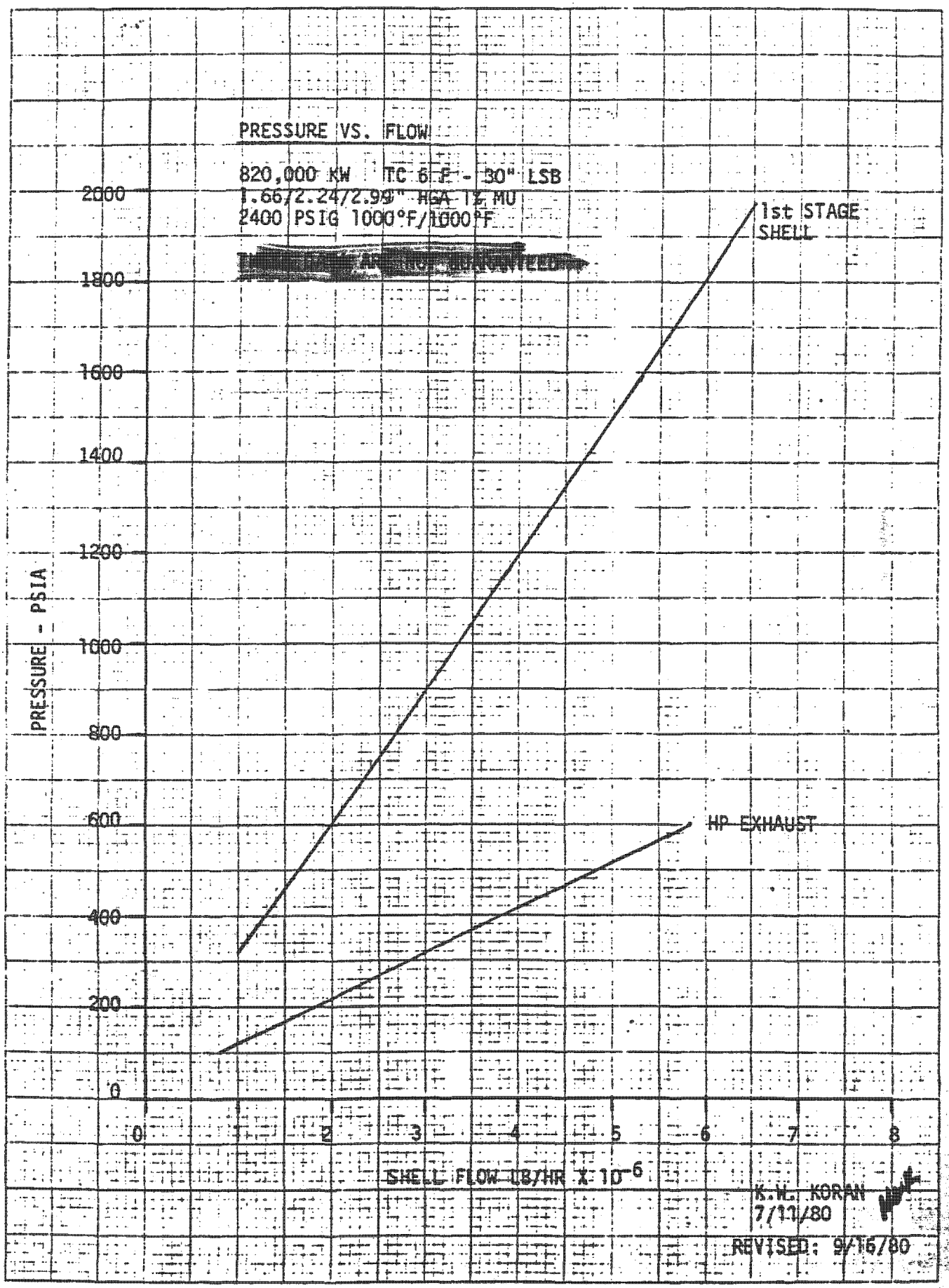

477HA199

477HA199

IP7010086

820,000 KW 1.66/2.24/2.99 IN. HGA. 1% MAKEUP
2400 PSIG, 1000F/1000F
TC6F-30 IN LSB 3600 RPM

EXTRACTION STAGE SHELL PRESSURE

TO DETERMINE THE EXTRACTION STAGE SHELL PRESSURE MULTIPLY THE FOLLOWING FACTORS BY: [redacted]

EXTRACTION NO.	2	3	4 (XO)	5	6	7	8
FACTOR	100.7	47.4	28.57	15.58	10.21	3.03	1.34

NOTE:

1. APPLY THE FACTOR FOR EXTRACTION NO. 2 TO THE FLOW TO THE FIRST REHEAT STAGE TO DETERMINE THE PRESSURE AHEAD OF THE INTERCEPT VALVE. HIGH PRESSURE TURBINE EXHAUST FLANGE PRESSURE EQUALS PRESSURE AHEAD OF THE INTERCEPT VALVE DIVIDED BY 0.9.

2. FLOW TO THE FOLLOWING STAGE THROTTLE FLOW MINUS LEAKAGES AND ALL EXTRACTIONS FROM PRECEEDING STAGES AND STAGE INTQUESTION PLUS ANY STEAM RETURNED TO THE TURBINE AHEAD OF THE STAGE IN QUESTION.

3. USE 3% PRESSURE DROP BETWEEN SHELL STAGE PRESSURE AND TURBINE SHELL FLANGE PRESSURE EXCEPT WHERE EXTRACTIONS ARE AT THE END OF A SHELL CASING.

4. THESE FACTORS ARE TO BE APPLIED FOR HEAT BALANCE CALCULATIONS AT RATER STEAM TEMPERATURES ONLY.

5. EXTRACTION PRESSURES DURING NORMAL OPERATION CAN BE GREATER THAN THOSE CALCULATED AT MAXIMUM EXPECTED THROTTLE FLOW BECAUSE OF MANUFACTURING TOLERANCES ON NOZZLE AREAS, VARIATIONS IN FLOW COEFFICIENTS, DEPOSITS IN THE STEAM PATH ETC. TO ALLOW FOR THIS, THE GENERAL ELECTRIC COMPANY RECOMMENDS THAT EXTRACTION WATER HEATERS BE DESIGNED FOR PRESSURES AT LEAST 15% GREATER THAN THOSE CALCULATED AT MAXIMUM THROTTLE FLOW CONDITION. IT IS LIKELY THAT THERE WILL BE ABNORMAL OPERATING CONDITIONS WHICH WILL RESULT IN PRESSURES GREATER THAN THOSE DEFINED ABOVE, WHICH SHOULD BE USED AS THE ACTUAL EXTRACTION PIPING AND FEEDWATER HEATER DESIGN PRESSURES.

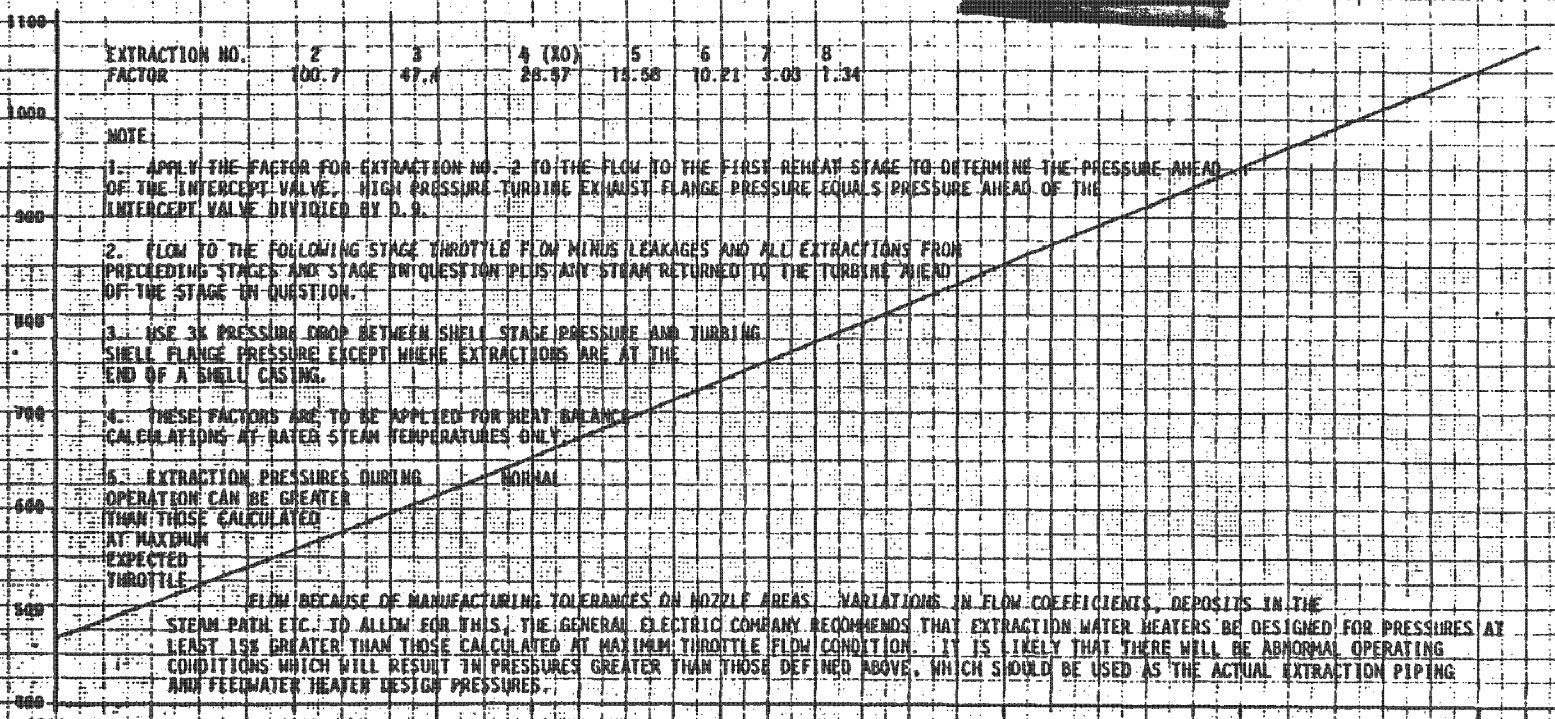

GENERAL ELECTRIC COMPANY, SCHENECTADY, NY

1/20/81
478HB168

IP7010087

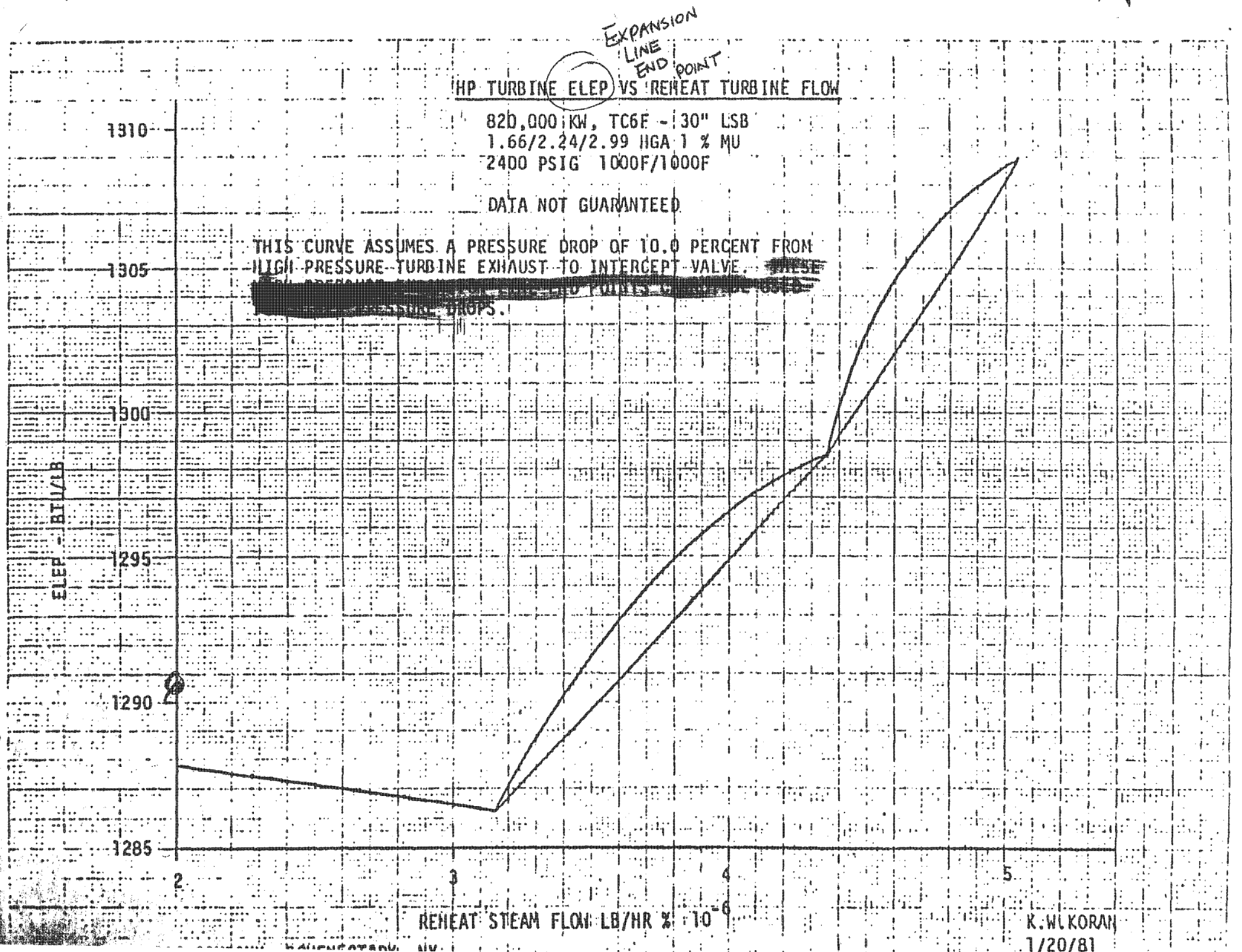

478HA169

IP7010088

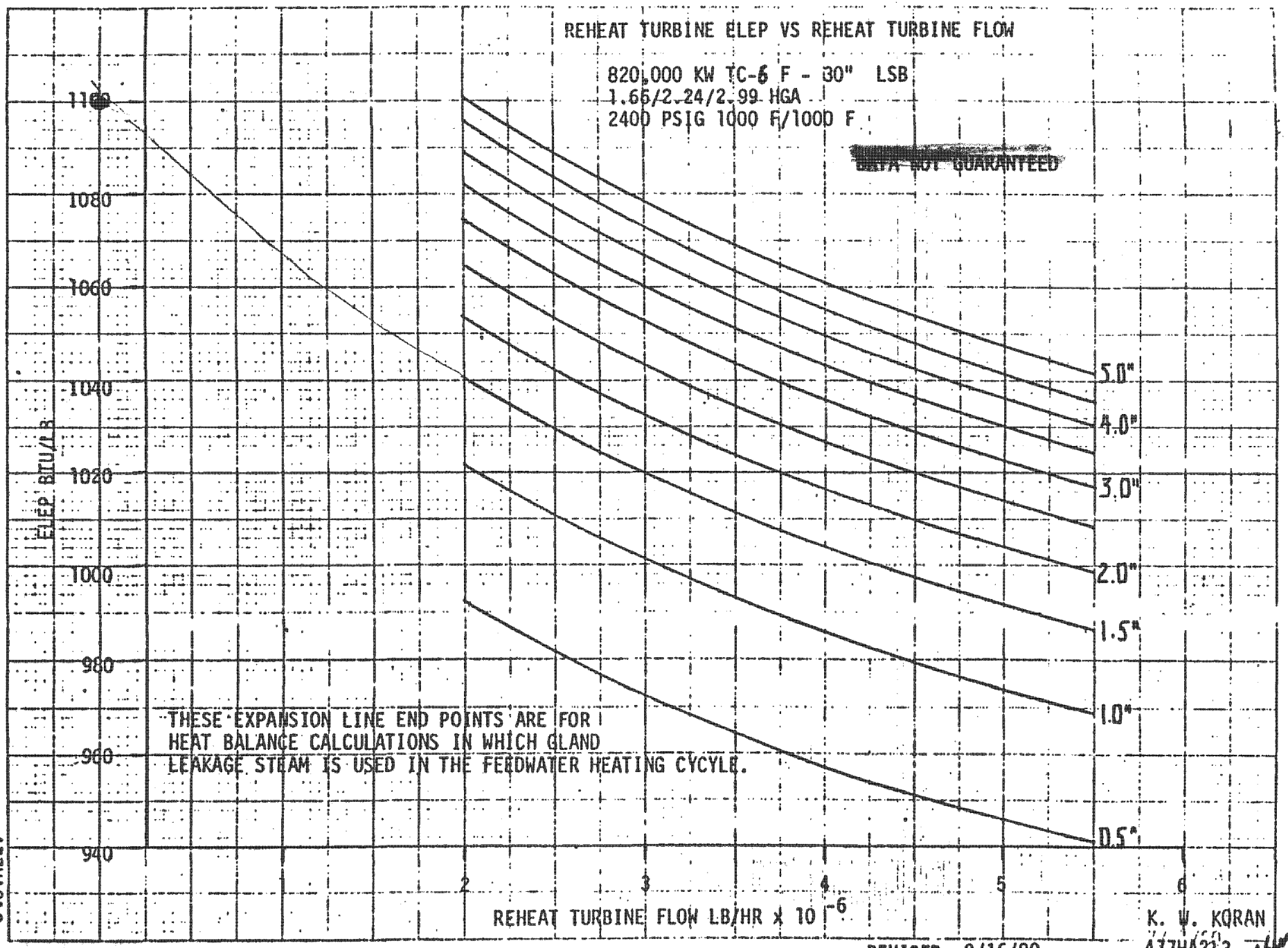

REVISED: 9/16/80

477HA213

IP7010089

476HB902

3600 RPM
30" X 85" LSB

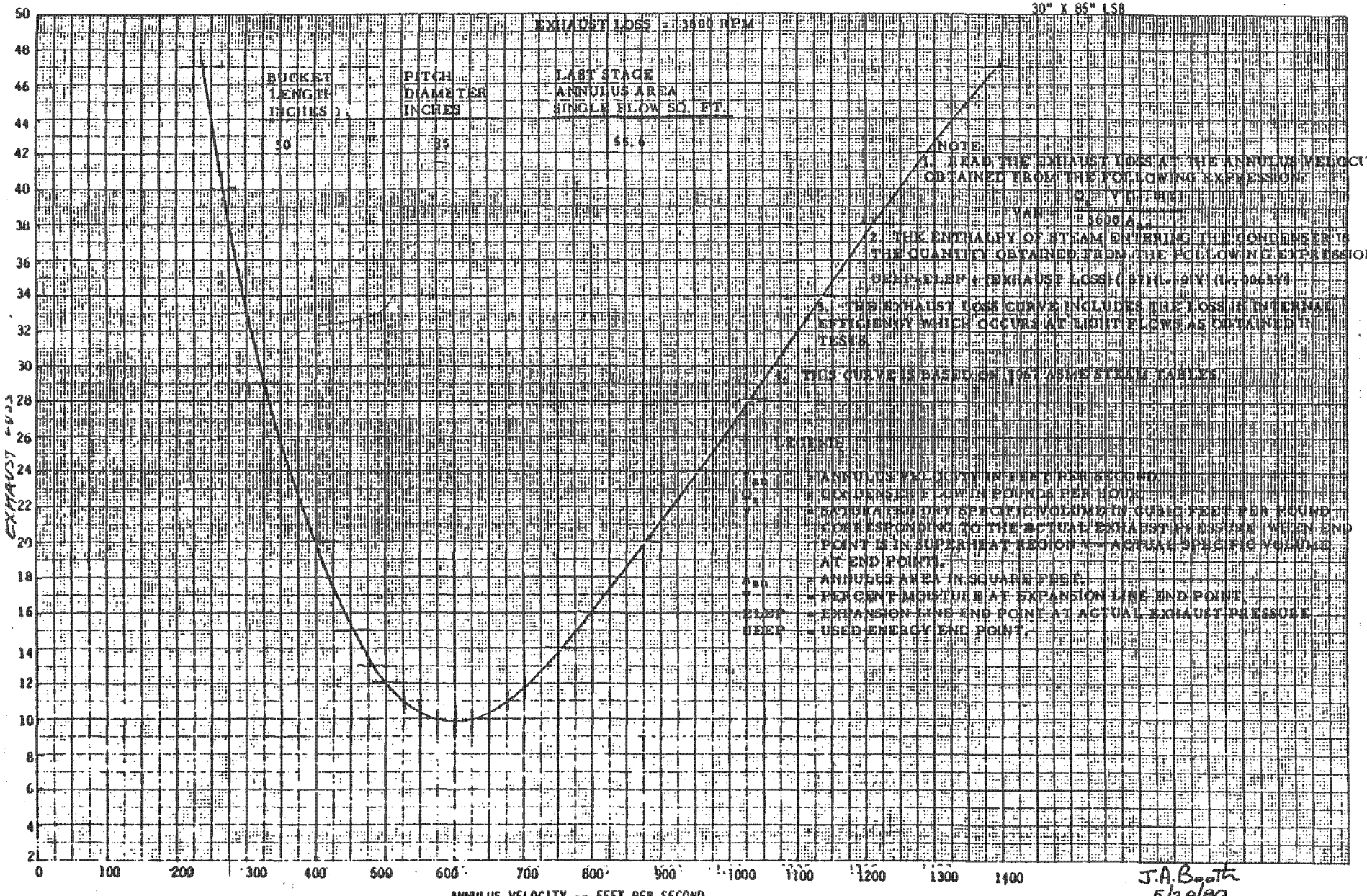

NOTE:

1. READ THE EXHAUST LOSS AT THE ANNULUS VELOCITY OBTAINED FROM THE FOLLOWING EXPRESSION:

$$V_{AN} = \frac{Q_s \, V_s \, (1-Y)}{3600 \, A_{an}}$$

2. THE ENTHALPY OF STEAM ENTERING THE CONDENSER IS THE QUANTITY OBTAINED FROM THE FOLLOWING EXPRESSION:

$$UEEP + EXHAUST\ LOSS \times (1 - Y) \times (1 - .0065 Y)$$

3. THE EXHAUST LOSS CURVE INCLUDES THE LOSS IN INTERNAL EFFICIENCY WHICH OCCURS AT LIMIT FLOWS AS OBTAINED IN TESTS.

4. THIS CURVE IS BASED ON 1967 ASME STEAM TABLES.

LEGEND

V_{an} = ANNULUS VELOCITY IN FEET PER SECOND
Q_s = SIDE DENSER FLOW IN POUNDS PER HOUR
V_s = SATURATED DRY SPECIFIC VOLUME IN CUBIC FEET PER POUND CORRESPONDING TO THE ACTUAL EXHAUST PRESSURE (WHEN END POINT IS IN SUPERHEAT REGION V = ACTUAL SPEC FIC VOLUME AT END POINT).
A_{an} = ANNULUS AREA IN SQUARE FEET.
Y = PER CENT MOISTURE AT EXPANSION LINE END POINT.
ELEP = EXPANSION LINE END POINT AT ACTUAL EXHAUST PRESSURE
UEEP = USED ENERGY END POINT.

J.A. Booth
6/20/80

476HB902

IP7010090

[redacted] HEAT RATE VS AUXILIARY TURBINE EFFICIENCY

- BASE CASE - IDFT AND BFPT AT 75% EFFICIENCY
- MULTIPLY HEAT RATE AT 75%/75% BY APPROPRIATE HEAT RATE MULTIPLIERS TO GET ADJUSTED MAIN TURBINE HEAT RATE VALUE FOR CHANGE IN AUXILIARY TURBINE EFFICIENCY.

820,000 KW TCSF - 30" LSB
1.66/2.54/2.99" HGA 1% MU

THESE DATA ARE NOT GUARANTEED.

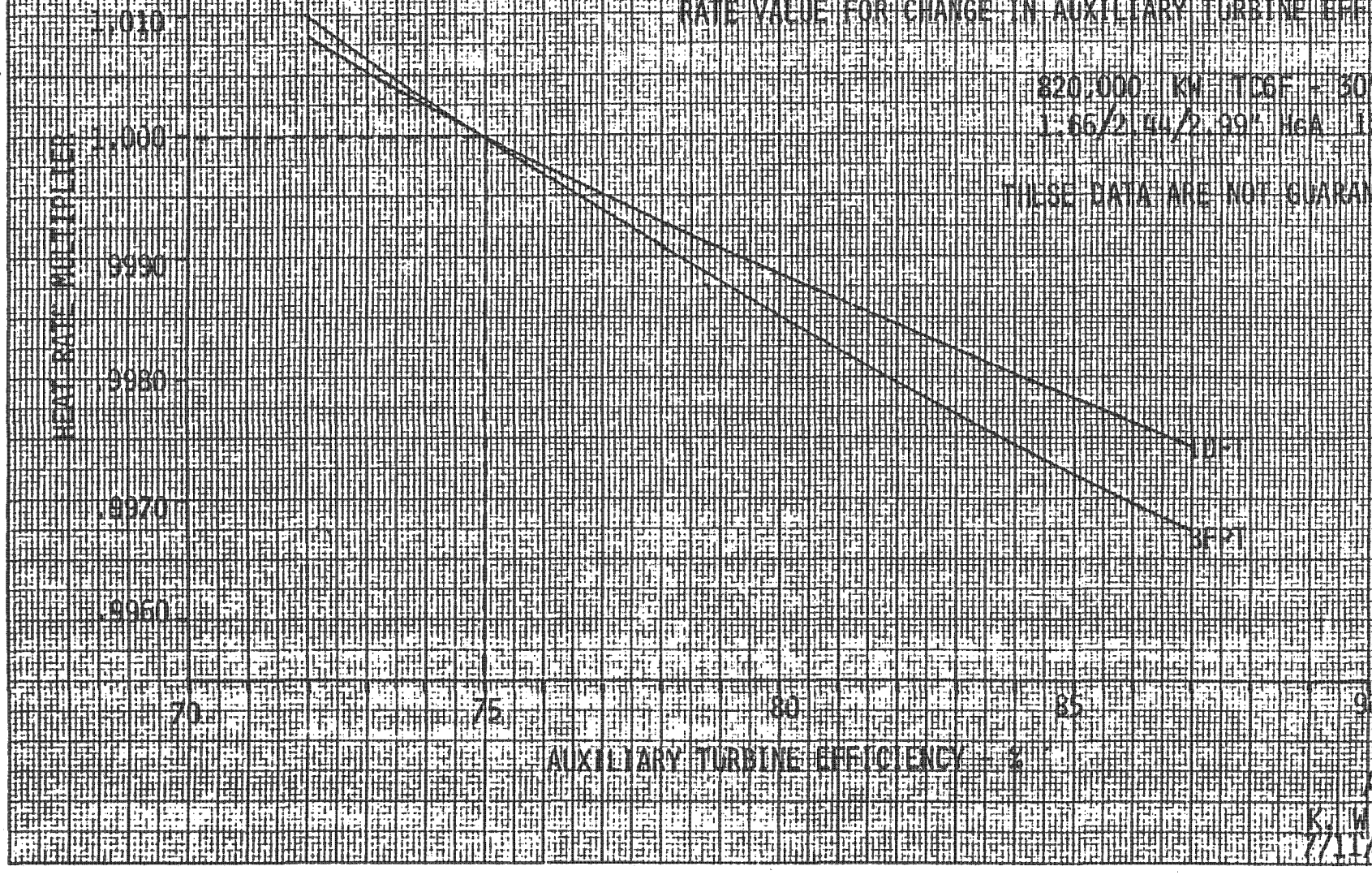

K. W. KORAN
7/11/80

477HA197

IP7010091

477HA197

820,000 KW TC 6 F - 30" LSB
1.66/2.24/2.99" HGA 1.0% M.U.
2400 PSIG 1000°F/1000°F

GOVERNING STAGE PITCH DIAMETER - 39"

PRESSURE DROPS - PSIA

	1ST VALVE POINT	2ND VALVE POINT	3RD VALVE POINT
THROTTLE VALVES	72.4	72.4	72.4
COMBINED REHEAT VALVES	6.5	8.9	10.3

B1-5 (M)

K. W. KORAN
1/20/81

IP7010092

820,000 KW

1.66/2.24/2.99 IN. HGA., 1% MAKEUP

2400 PSIG; 1000F/1000F

TC6F-30IN LSB 3600 RPM

GLAND LEAKAGE AND MECHANICAL LOSSES

TO DETERMINE THE LEAKAGE FLOW IN #/HR., MULTIPLY THE FOLLOWING PACKING CONSTANTS BY THE $\sqrt{P/V}$ (AHEAD OF THE LEAKAGE). THE LEAKAGE THROUGH THE FIRST PACKING IN A SERIES WILL BE THE SUM OF THE FLOWS TO THE PACKING LEAKOFFS FOLLOWING IT.

REFER TO HEAT BALANCE DIAGRAM 477HB167 FOR IDENTIFICATION OF LEAKAGES.

LEAKAGE NO.	1 & 2	2	3	4 & 5	5	6 & 7	7	8	9
PACKING CONSTANT	56	50	540	500	800	580	980	550	550

WHEN EXPANSION LINES FROM 478HD167 ARE USED IN HEAT BALANCE CALCULATIONS, THE LEAKAGES SHOWN ON THIS SHEET MUST BE USED IN THE FEEDWATER HEATING CYCLE.

THE 1st AND 2nd LEAKAGES CAN BE DETERMINED BY SUBTRACTING THE 2nd LEAKAGE FROM THE SUM OF BOTH LEAKAGES AND THE PRESSURE AHEAD OF THE 2nd LEAKAGE IS THE EXTRACTION STAGE PRESSURE TO WHICH THE 1st OF THE 2 LEAKAGES CONNECTS INTO.

USE THROTTLE ENTHALPY FOR LEAKAGES 1 AND 2.
USE HIGH PRESSURE TURBINE EXHAUST ENTHALPY FOR LEAKAGES 4,5,6, and 7.
ENTHALPY FOR LEAKAGE 8 and 9 CAN BE DETERMINED FROM TURBINE EXPANSION LINES ON 478HD167 AT CROSSOVER PRESSURE ON 478HB168.

7800 LB/HR ARE REQUIRED BY THE STEAM SEALS. WHEN LEAKAGES 2,5,7,8 AND 9 COMBINED ARE LESS THAN 7800 LB/HR, THROTTLE STEAM MUST BE USED.

(STEAM SEAL FLOW TO STEAM PACKING EXHAUSTER IS 4200 LB/HR AT ALL LOADS.)

TO DETERMINE THE FIRST STAGE ENTHALPY AND PRESSURE USED TO CALCULATE LEAKAGE NO. 3, USE THE FOLLOWING TABLE:

THROTTLE FLOW	6256642	5958707	5318146	3766858	2647158
1ST STAGE ENTHALPY BTU/LB	1435.8	1430.4	1419.9	1400.5	1400.0
1st STAGE SHELL PRESSURE PSIA	1887	1789	1583	1104	776

THROTTLE FLOW RATIO AT FIRST ADMISSION = 0.60.

FIRST STAGE PITCH DIAMETER = 39

FOR OTHER THAN RATED INITIAL TEMPERATURE, READ THE FIRST STAGE SHELL PRESSURE CURVE DRAWN THROUGH THESE POINTS AT A FLOW CORRECTED FOR $\sqrt{\frac{V\ DESIRED}{V\ RATED}}$ WHERE V IS INITIAL SPECIFIC VOLUME CU. FT/LB.

TURBINE GENERATOR MECHANICAL LOSSES:

1. 5707 KW FIXED LOSSES ARE NOT INCLUDED IN THE 3600 RPM GENERATOR LOSS CURVE.

GENERAL ELECTRIC COMPANY, SCHENECTADY, N. Y.

K. W. Koran
1/20/81
478HB170

Guarantee?

IP7010093

TORSIONAL SPRING MASS MODEL FOR INTERMOUNTAIN POWER PROJECT

LS-1370
S2-30

Rotor	WR^2 ($Lb\text{-}Ft^2$)	Spring Constant (Million In-LB/Radian)
HP	31376	
		540
DFRHT	54237	
		835
LPA	186501	
		1290
LPB	187932	
		1478
LPC	192191	
		1350
GEN	295391	

NORMALIZED MODE SHAPE

Mode Shape	Freq. (Hz)	Mass Location					
		HP	DFRHT	LPA	LPB	LPC	GEN
#1	13.8	1.00	0.84	0.58	0.18	-0.23	-0.59
#2	24.2	1.00	0.50	-0.10	-0.37	-0.20	0.23
#3	31.8	1.00	0.14	-0.55	0.18	0.48	-0.21
#4	41.1	0.64	-0.28	-0.42	1.00	-0.91	0.21
#5	50.0	0.87	-1.00	0.19	-0.07	0.02	0.00

INTERMOUNTAIN POWER PROJECT

LS-1370
S2-30

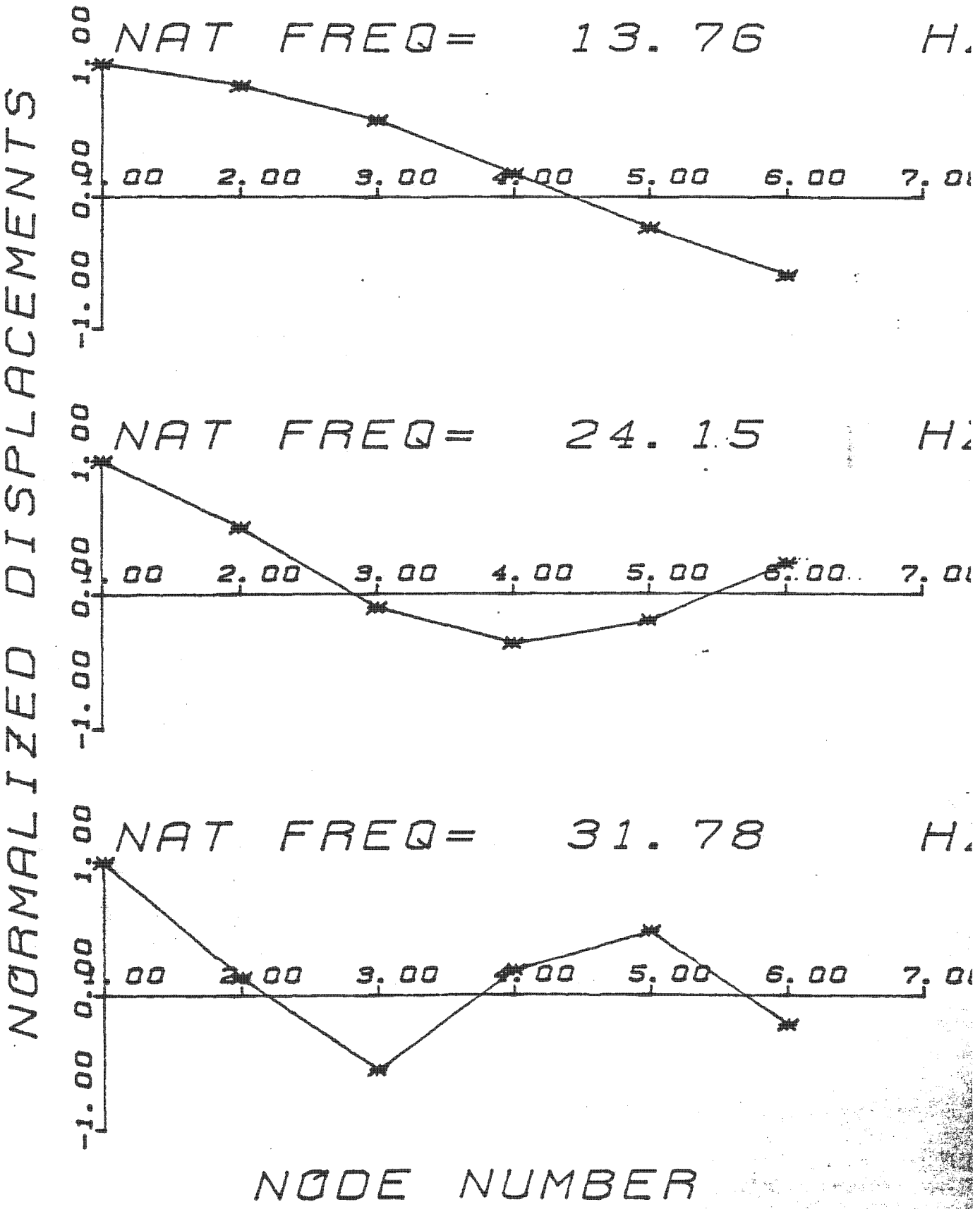

IP7010095

INTERMOUNTAIN POWER PROJECT

LS-1370
S2-30

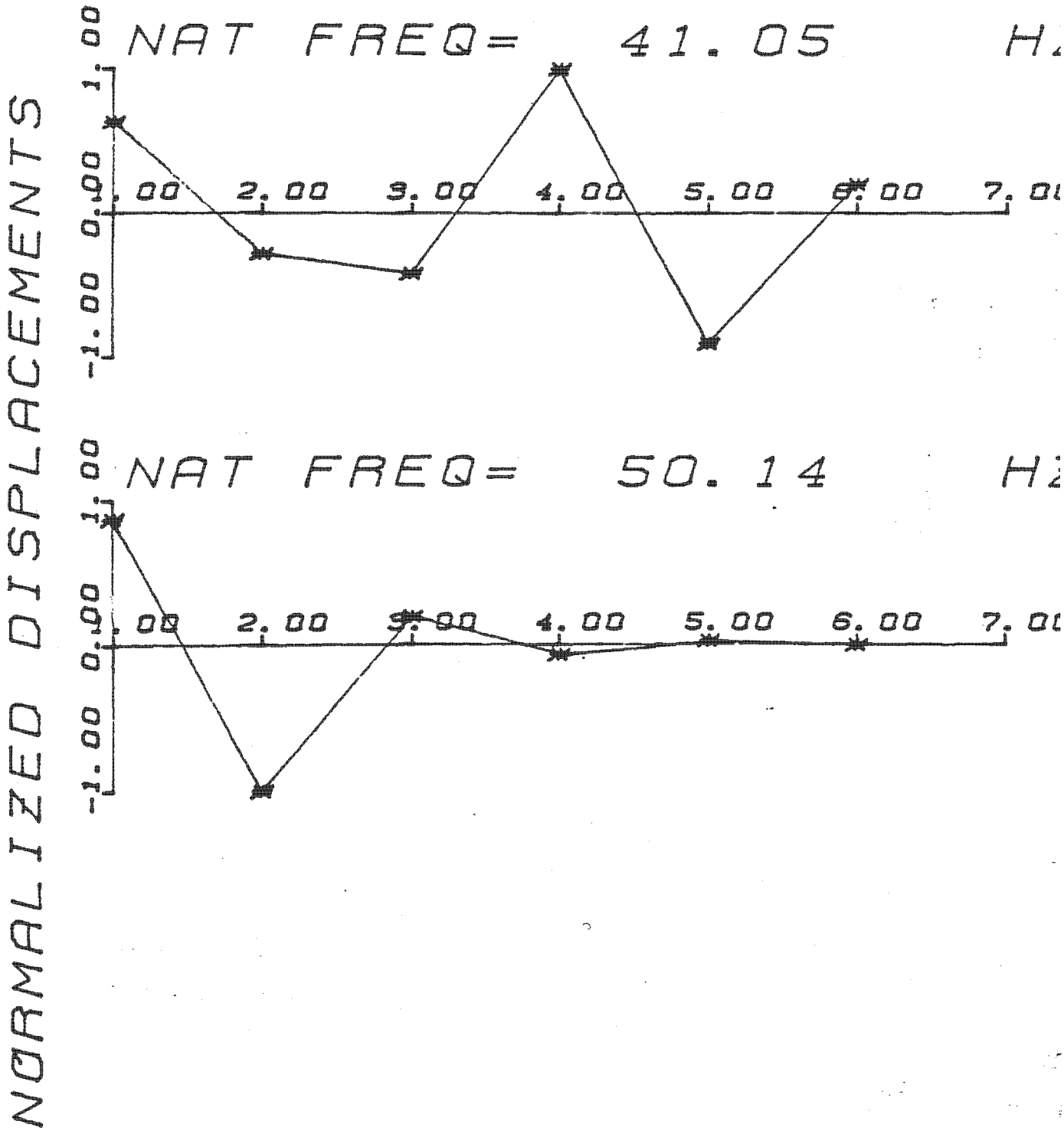

IP7010096

IP7010097

IPP TURBINE CROSS SECTION

R.L. Radmacher

NOMENCLATURE

1. STANDARD ¢ CAP, TB. END
2. BEARING, JOURNAL, T-1
3. OIL DEFLECTOR, T-1, GEN. END
4. EXHAUST, HP TO REHEAT
5. STEAM PACKING, N-1
6. NOZZLE DIAPHRAGM, HP
7. BUCKET BLADES, HP
8. SHELL, HP INNER
9. SHELL, HP OUTER
10. MID-SPAN BALANCE ACCESS
11. STEAM INLET, HP
12. NOZZLE, FIRST STAGE, HP
13. STEAM PACKING, N-2
14. OIL DEFLECTOR, T-2 TB. END
15. BEARING, JOURNAL, T-2
16. ROTOR, HP
17. COUPLING GUARD "A"
18. ROTOR, REHEAT
19. THRUST BEARING WEAR DETECTOR
20. THRUST BEARING
21. BEARING, JOURNAL, T-3
22. OIL DEFLECTOR, T-3 GEN. END
23. STEAM PACKING, N-3
24. SHELL, REHEAT, INNER #2, TB. END
25. CROSSOVER CONNECTION
26. SHELL, REHEAT, INNER #1, TB. END
27. NOZZLE, REHEAT, DOUBLE FLOW
28. SHELL, REHEAT, INNER #1, GEN. END
29. STEAM INLET, REHEAT
30. SHELL, REHEAT, OUTER
31. SHELL, REHEAT, INNER #2, GEN. END
32. STEAM PACKING, N-4
33. OIL DEFLECTOR, T-4, TB. END
34. BEARING, JOURNAL, T-4
35. COUPLING GUARD "B"
36. ROTOR, LP "A"
37. EXHAUST HOOD "A"
38. BEARING, JOURNAL, T-5
39. OIL DEFLECTOR, T-5, GEN. END
40. STEAM PACKING, N-5
41. ATMOSPHERIC RELIEF DIAPHRAG
42. NOZZLE, LP, DOUBLE FLOW
43. STEAM PACKING, N-6
44. OIL DEFLECTOR, T-6, TB. END
45. BEARING, JOURNAL, T-6
46. TUNNEL ASSEMBLY, A/B HOOD
47. INNER CASING, LP "A"
48. COUPLING GUARD "C"
49. ROTOR, LP "B"
50. EXHAUST HOOD "B"
51. BEARING, JOURNAL, T-7
52. OIL DEFLECTOR, T-7, GEN. END
53. STEAM PACKING, N-7
54. STEAM PACKING, N-8
55. OIL DEFLECTOR, T-8, TB. END
56. BEARING, JOURNAL, T-8
57. TUNNEL ASSEMBLY, B/C HOOD
58. TUNNEL ASSEMBLY, C HOOD/ TURNING GEAR STANDARD
59. COUPLING GUARD "D"
60. ROTOR, LP "C"
61. EXHAUST HOOD "C"
62. BEARING, JOURNAL, T-9
63. OIL DEFLECTOR, T-9, GEN. END
64. STEAM PACKING, N-9
65. STEAM PACKING, N-10
66. OIL DEFLECTOR, T-10, TB. END
67. BEARING, JOURNAL, T-10
68. EXHAUST HOOD ANCHOR
69. OIL DEFLECTOR, TURNING GEAR STANDARD, GEN. END
70. TURNING GEAR
71. COUPLING GUARD "E"
72. SHELL EXTRACTION, 2ND STAGE, COOLING STEAM
73. GENERATOR FIELD
74. EXHAUST TO CONDENSER
75. SHELL EXTRACTION, 4TH STAGE
76. STANDARD ¢ CAP, #2

IP7010098

NOZZLE BOX RLR

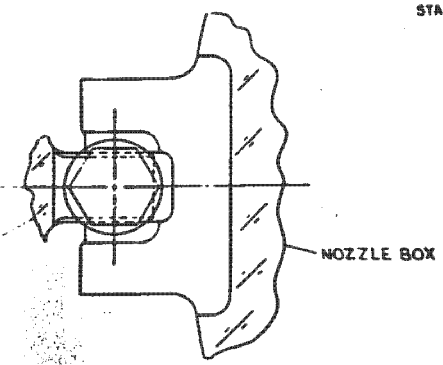

SECTION "D-3" (F-5)

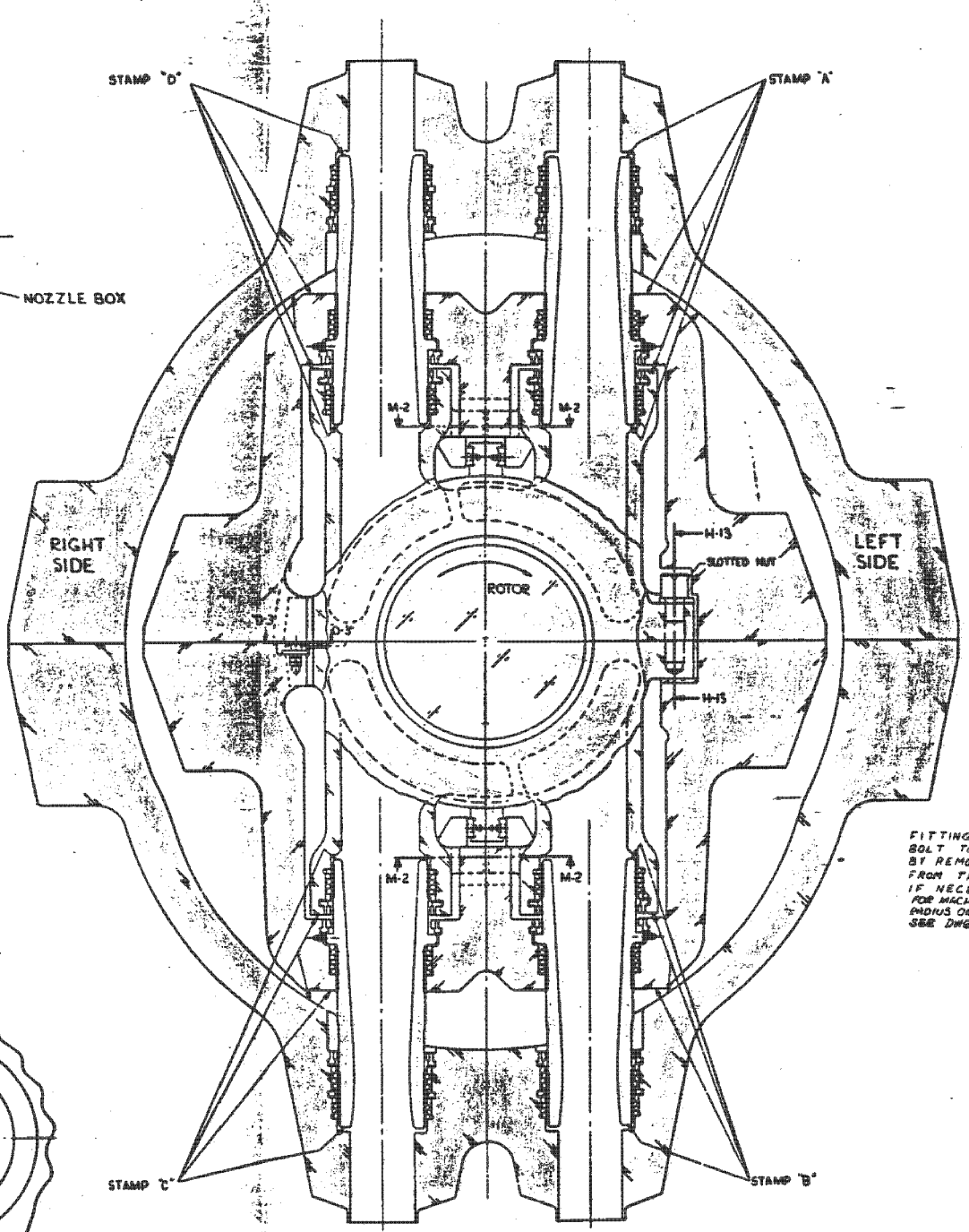

VIEW THRU ℄ INLETS LOOKING IN DIRECTION OF 2ND STAGE BUCKETS

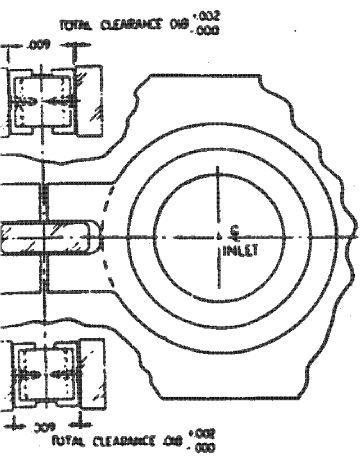

ECTION M-2
(D-7, H-7)

NOTES:

1. FOR ... RE-AS... AS ...
2. THICK... SHOULD... (SPILL... IS SET... SHELLS...
3. MINIMU... BOX ... THAT ... THAN ...
4. FOR ... USE ...
5. THE U... PROH...
6. VERT... AFTER ...
7. FLOAT ... CLEAR... BOX ... TO .0...
8. WITH ... SHELL ... CHECK ... WITH ... REMOV... CAST ...

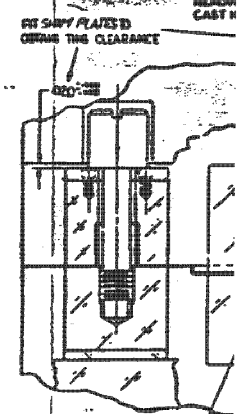

FITTING OF HOLD DOWN BOLT TO BE ACCOMPLISHED BY REMOVAL OF MATERIAL FROM THIS SURFACE OF BOLT, IF NECESSARY.
FOR MACHINING OF ELLIPTICAL RADIUS ON HOLD DOWN BOLT SEE DWG 254A9136 PT. 1.

SE...

Shell ar...
Assemb...
Dwg. 83...

IP7010099

HP TURBINE

RLR

FOR MAIN STEAM INLET EXP JO
SEE 839E606 (ASM NOZ. BOX €

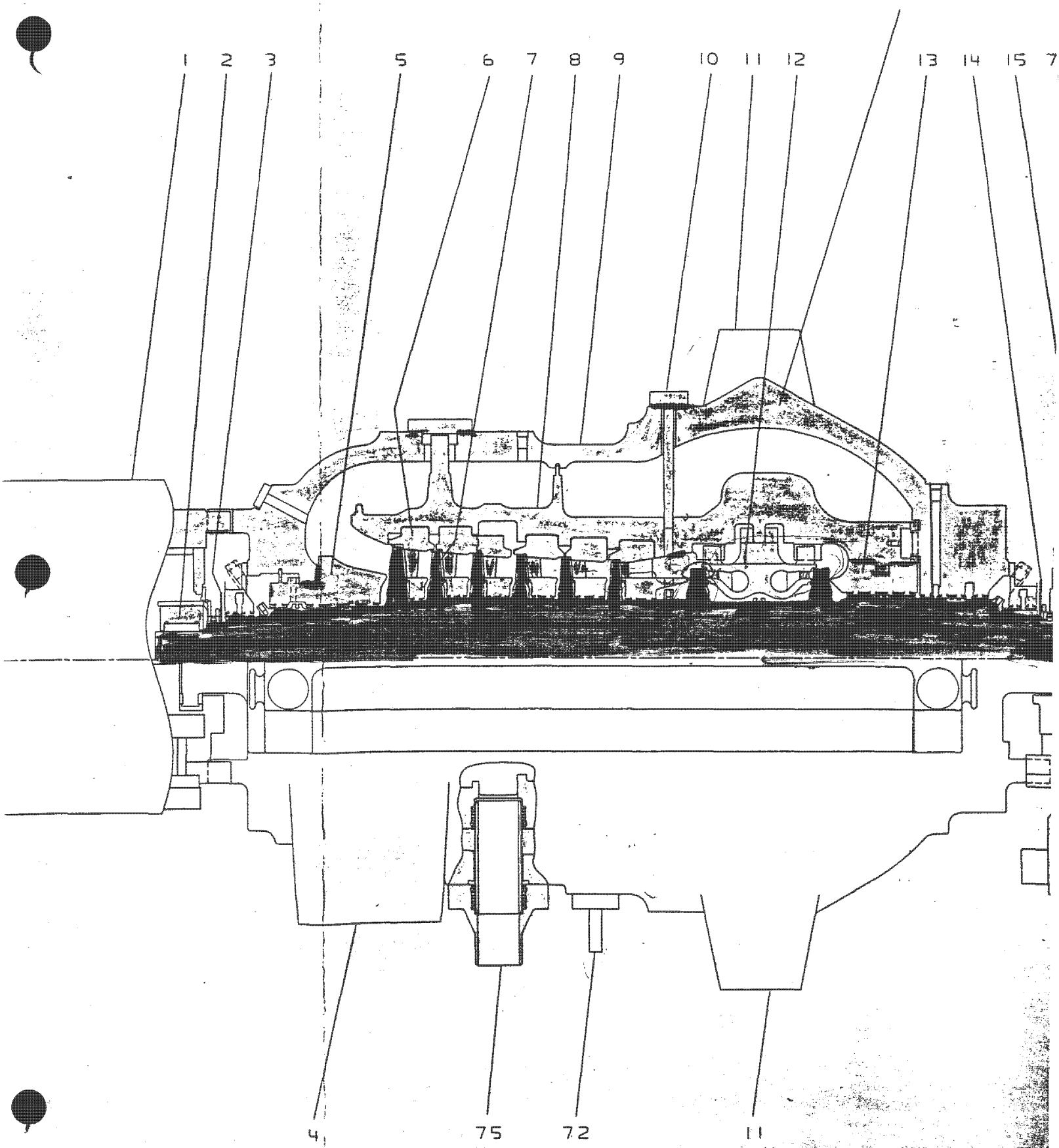

IB 7
Wir. Dia.

IP7010100

BRG 2+3

RLR

FOR MAIN STEAM INLET EXP JOINT ASM,
SEE 839E606 (ASM NOZ. BOX & SHELLS)

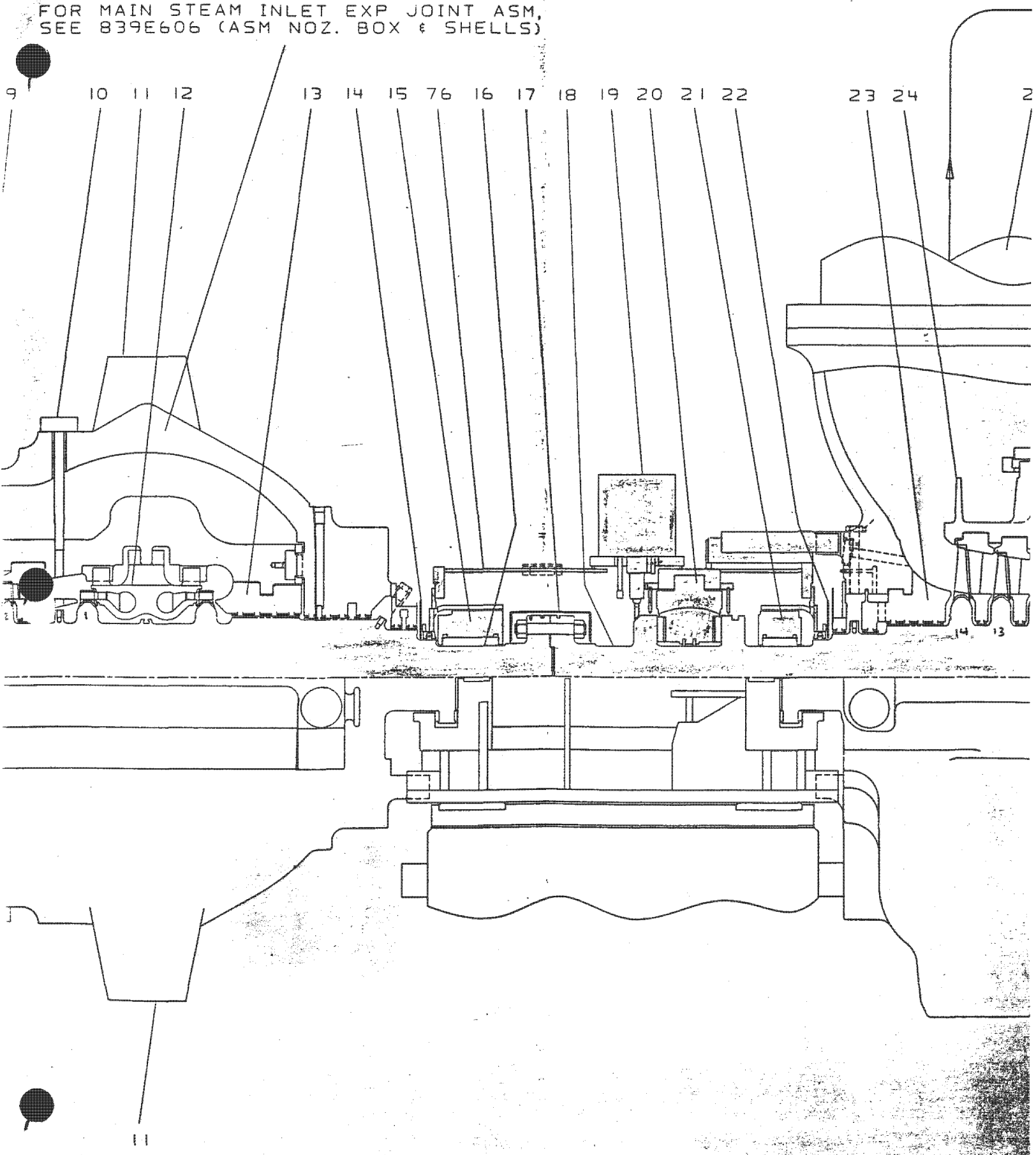

IP7010101

IP TURBINE

RLR

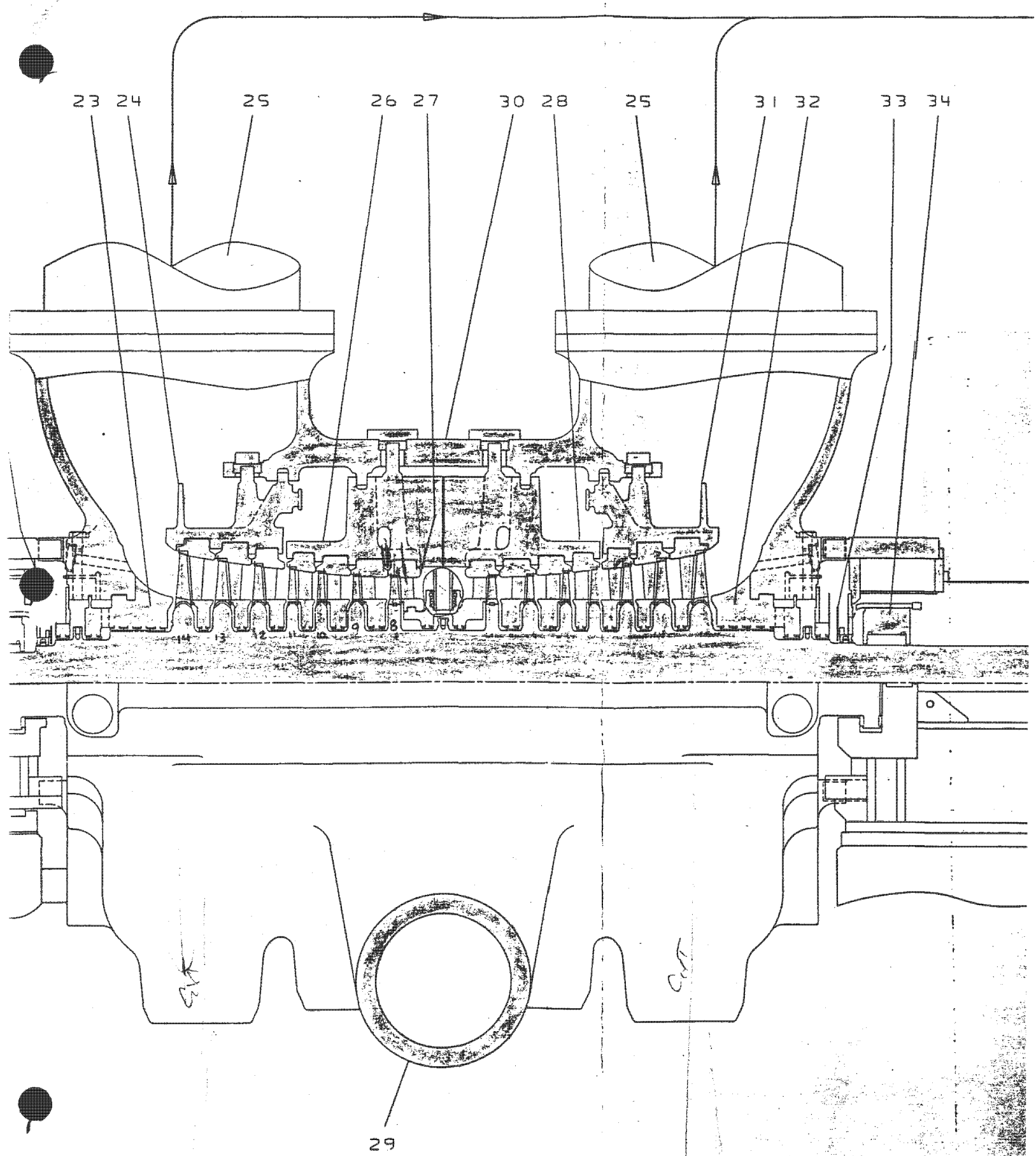

IP7010102

CPLG B BRG 5 RLR

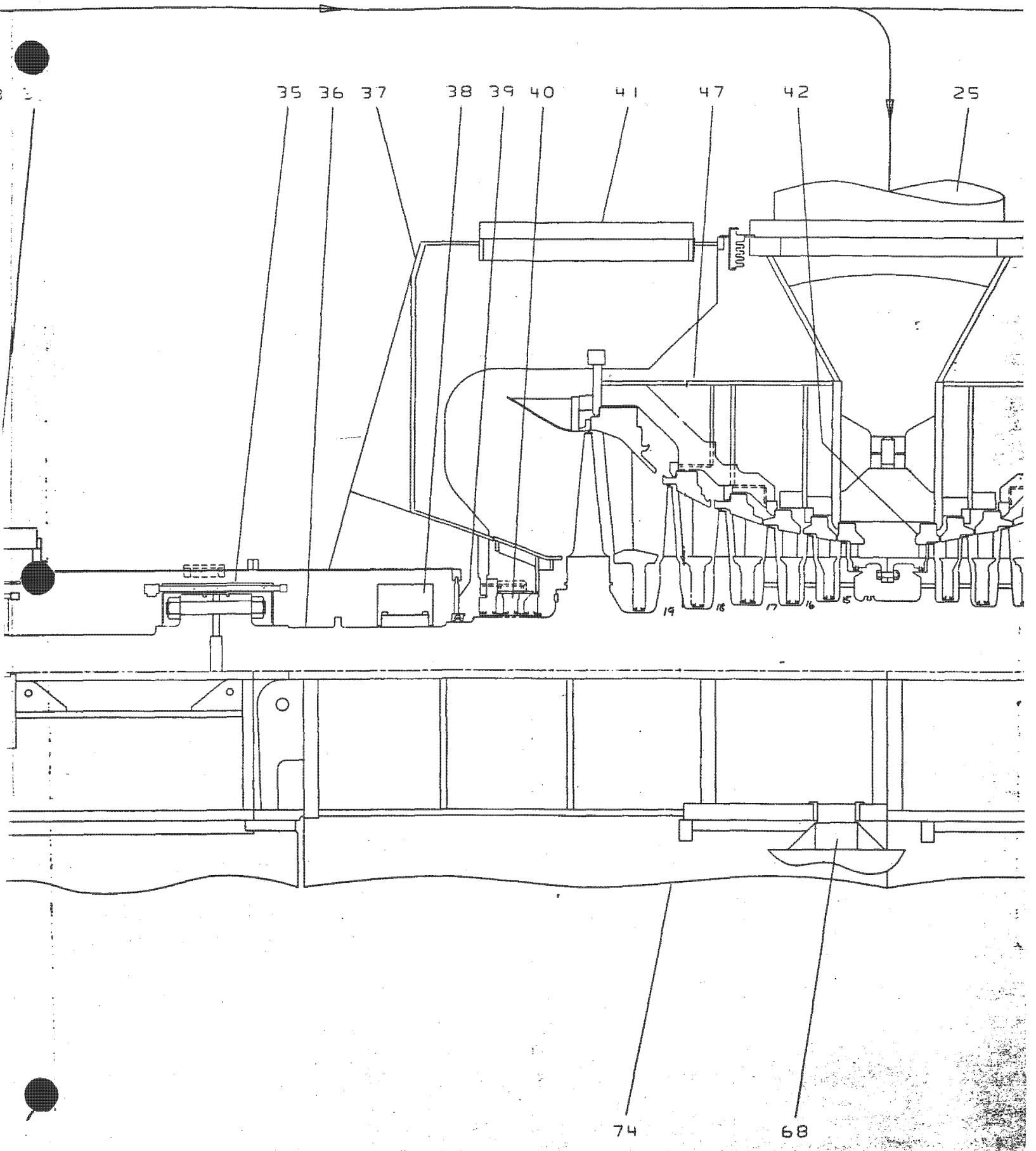

IP7010103

LPA TURBINE

RLR

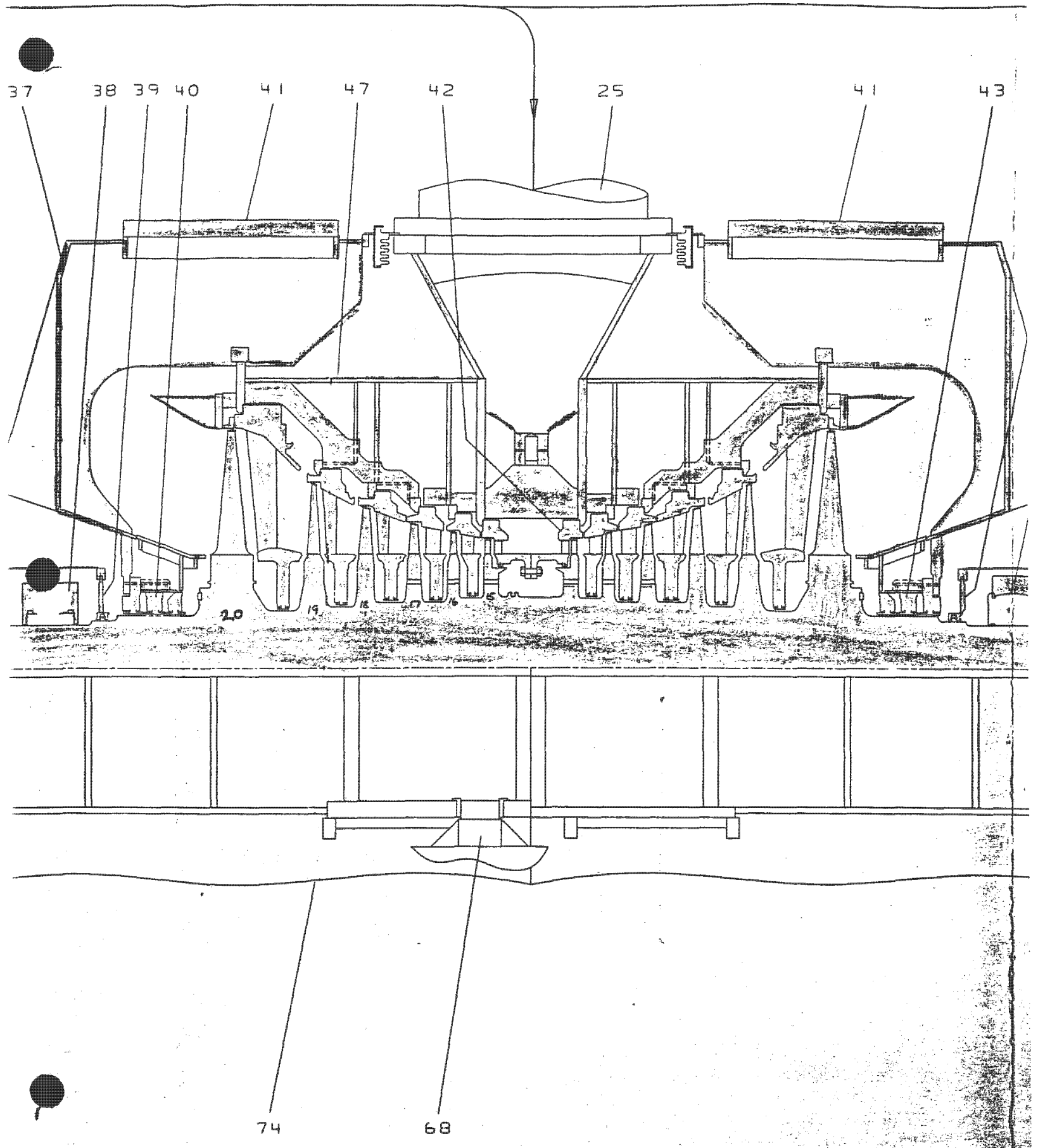

IP7010104

CPLG C

RLR

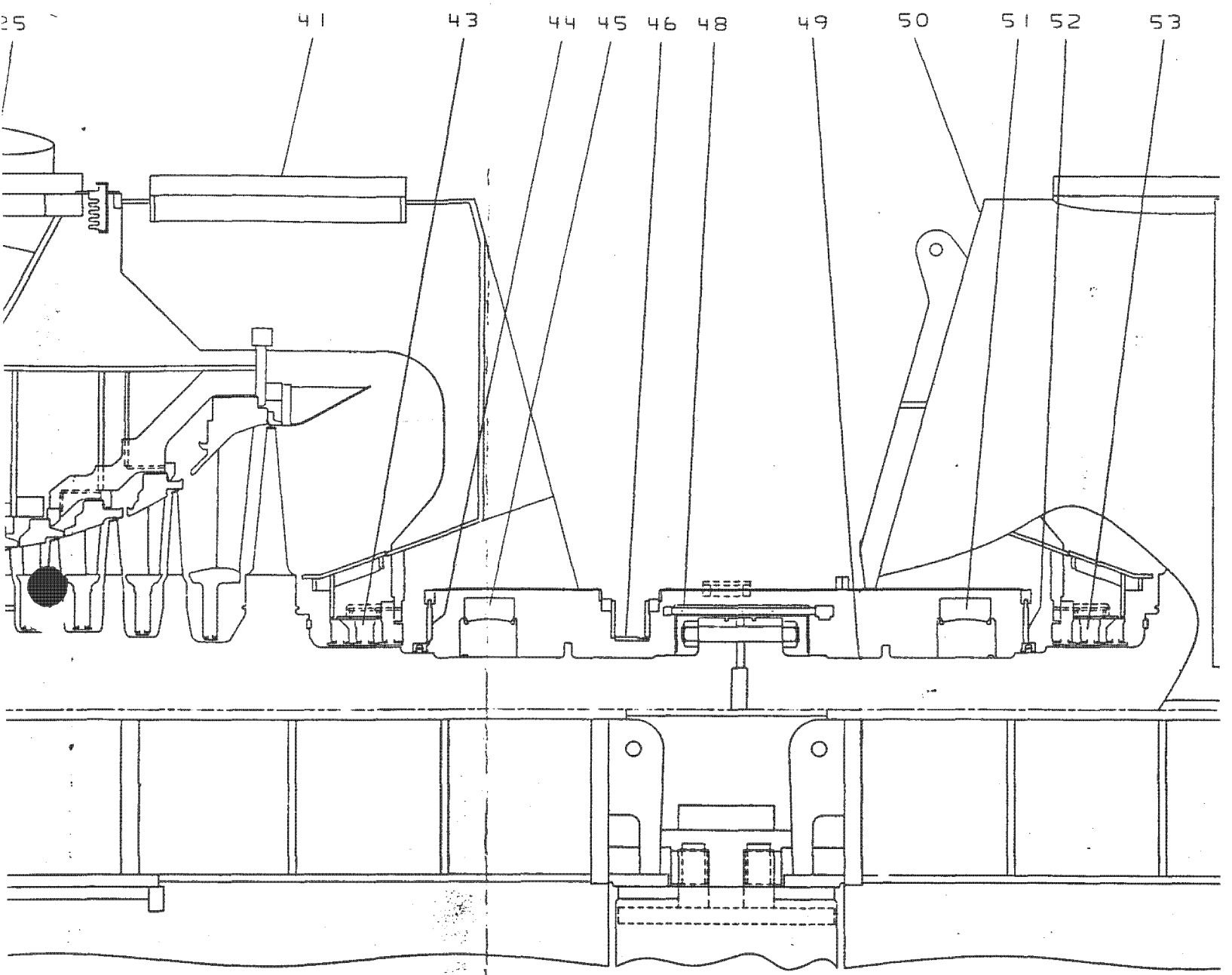

IP7010105

LPB TURBINE HOOD

RLR

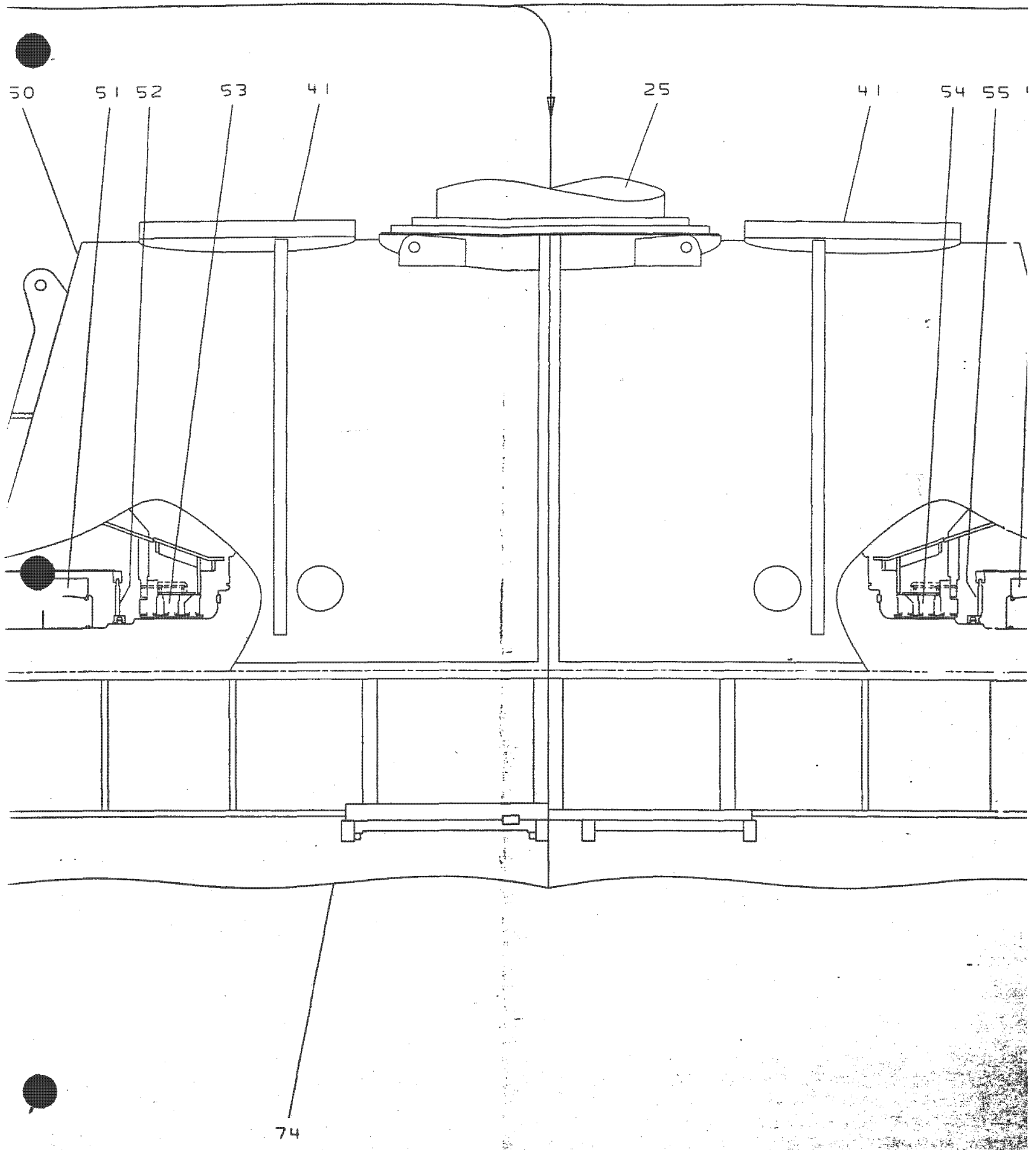

IP7010106

CPLG D

RLR

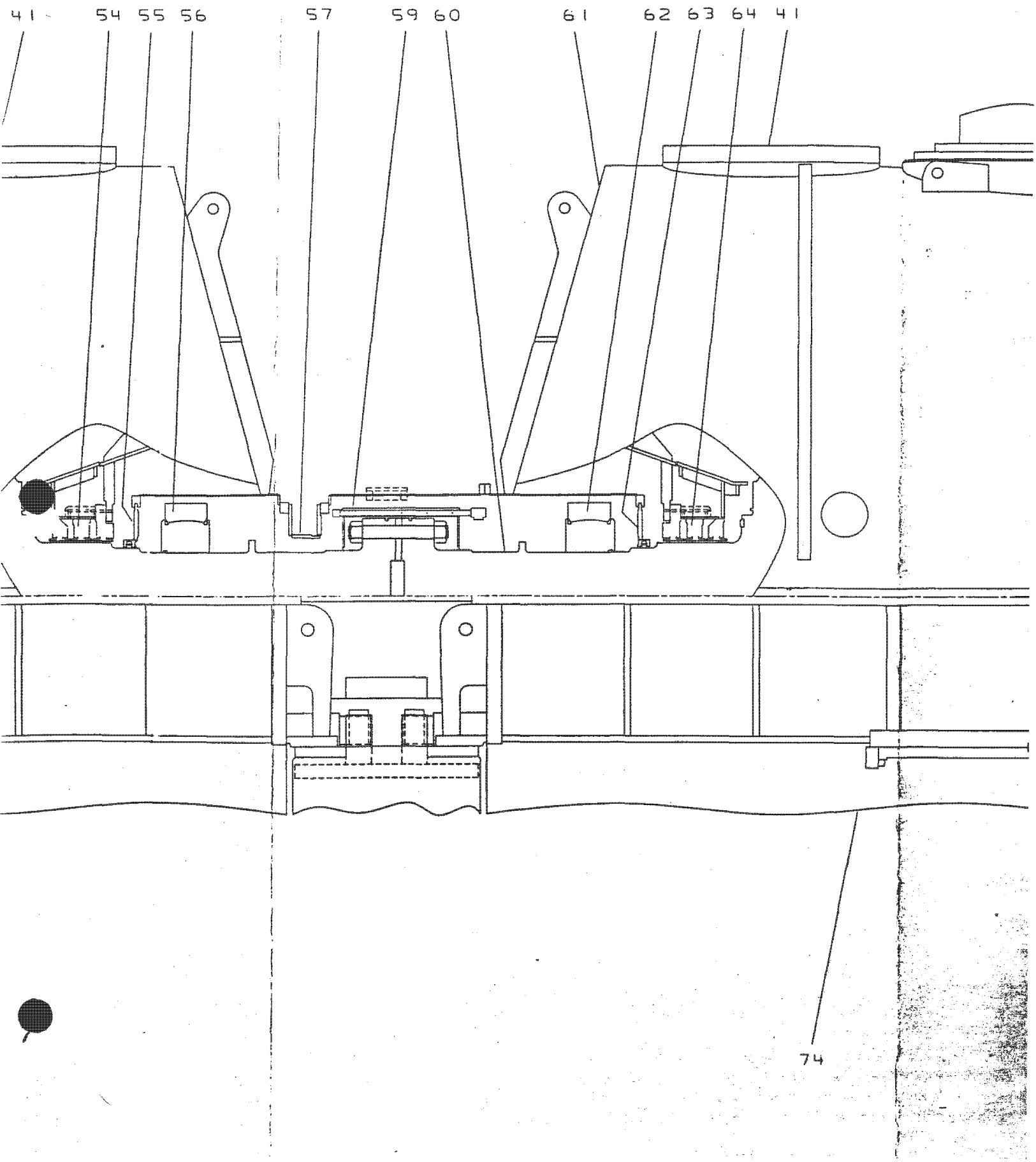

IP7010107

LPC TURBINE HOOD

RLR

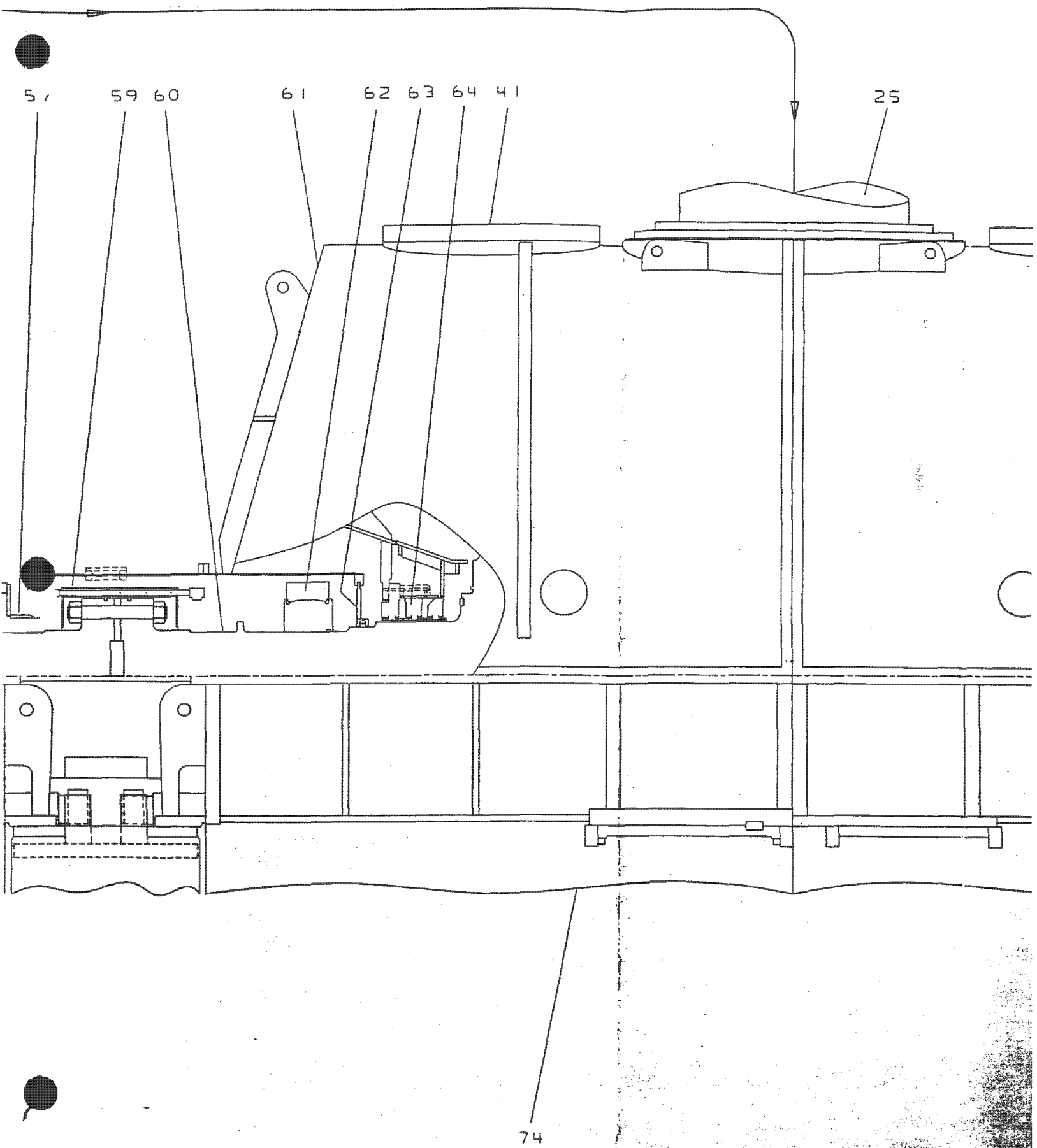

Turbine Cross-Sectio
Dwg. 275R700 (Rev. (

IP7010108

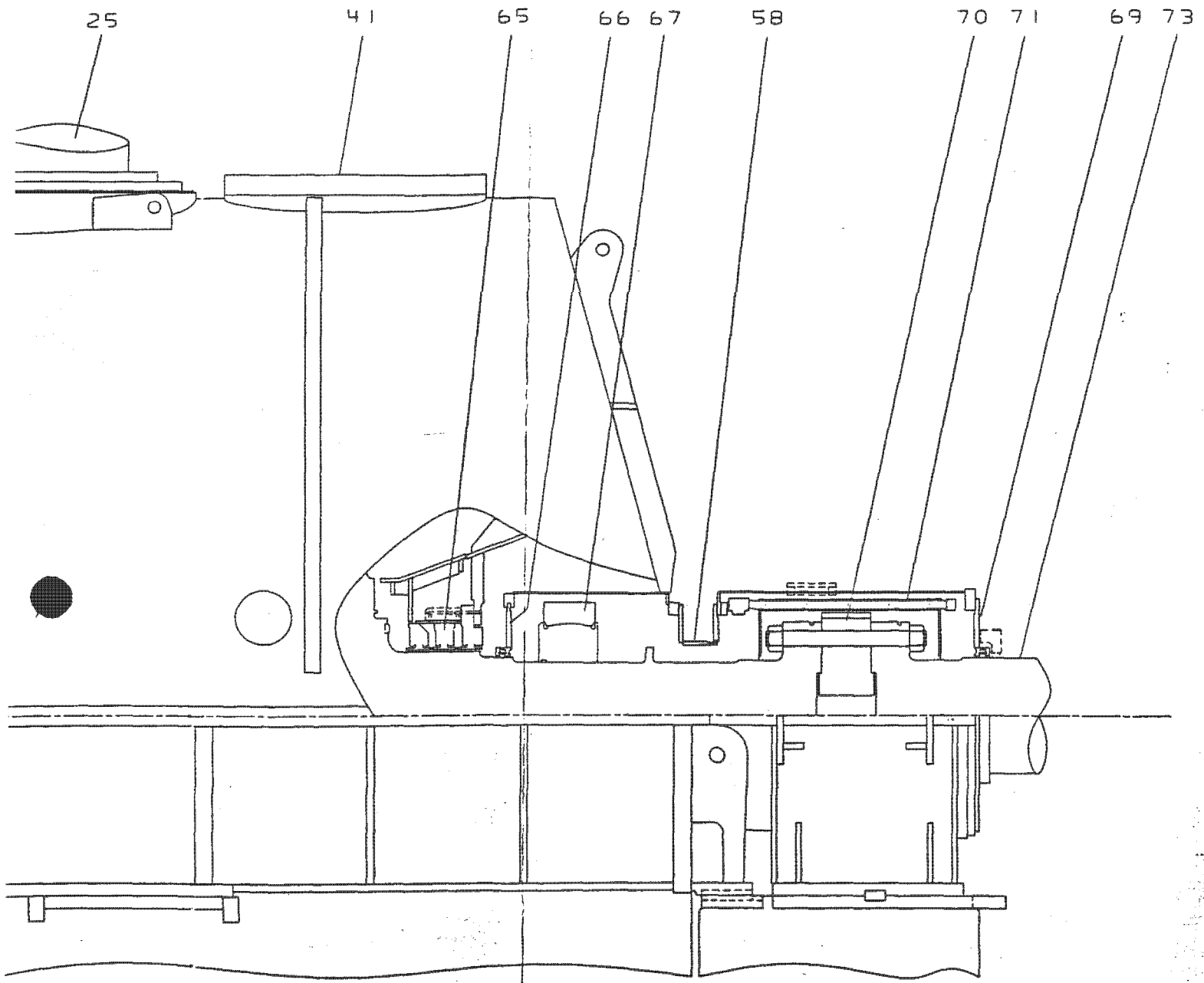

urbine Cross-Section Assembly
wg. 275R700 (Rev. 0)

Fig. 1-1

IPP TURBINE VALVES

RLR

Nomenclature

1	Assembly	32	Bushing Inner
2	Assembly	33	Bushing Outer
3	Assembly	34	Gasket
4	Assembly	35	Bushing
5	Valve Casing	36	Spring Housing Assembly
6	Valve Casing	37	Collar
7	Valve Casing	38	Bolt
8	Valve Casing	39	Lock Plate
9	Upper Head	40	Pipe Assembly
10	Stud	41	Paint Instructions
11	Nut	42	Hydro Seat
12	Collar	43	Assembly Notes
13	Dowel	44	Blowdown Cover
14	Strainer	45	Screw
15	Pin	46	Key
16	Valve Seat	47	Electrohydraulic Control Pack
17	Anti Lean Ring	48	Nut
18	Bolt	49	Stud
19	Gasket	50	Pipe Plug
20	Gasket	52	Ship Fixture
21	Valve	53	Gasket
23	Valve Cap	54	Split Collar
24	Bolt	55	Backing Plate
25	Bypass Valve	56	Screw
26	Bushing	57	Name Plate
27	Keep Ring	58	Drive Screw
28	Valve Stem	59	Name Plate
29	Valve Pin	60	Lock Washer
30	Pressure Head	200	Power Actuator
31	Seal Ring		

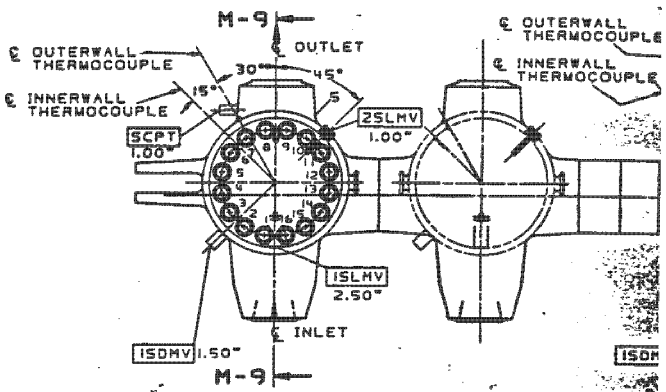

(1) ASM. S.V.#1

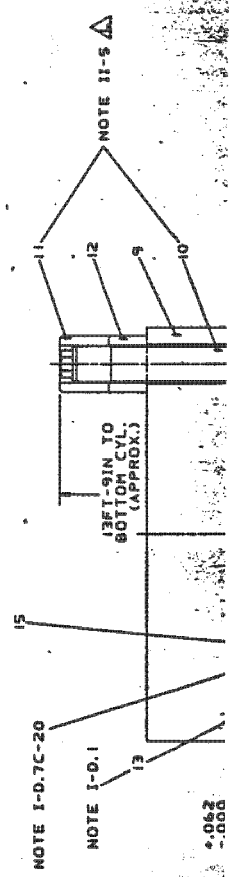

BOLT TORQUE REQUIREMENTS — (1)

ALL BOLT, STUD, NUT TAPPED HOLE THREADS AND BEARING SURFACES MUST BE CLEANED AND LUBRICATED. REFER TO GEK 72351 FOR APPROVED LUBRICANTS.

PT.	SIZE	FT.-LB'S. OF TORQUE
18	1.000"-8	190
24	1.250"-8	410
38	1.250"-8	410

NOTE: THE SPECIFIED TORQUE MUST BE REACHED IN AT LEAST TWO PASSES AND SEQUENTIALLY TIGHTENED.

(41) PAINTING INSTRUCTI

(42) HYDRO. SEAT TIGHTN

IP7010110

MAIN STOP

RLR

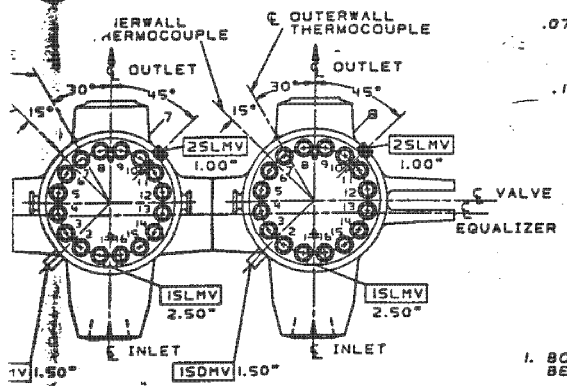

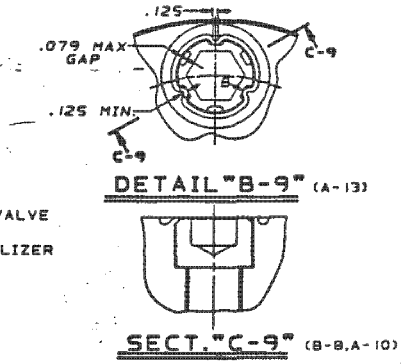

1. BOLT HEAD MUST BE RECESSED .031" BELOW THE EDGE OF PEENING LIP.
2. TWO STEPS IN PEENING ARE RECOMMENDED. FIRST USING A PEENING TOOL WITH .375R PEEN UNTIL LIP JUST TOUCHES SHARP EDGES THEN USING .125R TOOL PEEN LIP INTO CONTACT WITH SLOT AT POINT "B".
3. PEEN METAL INTO 3 EQUALLY SPACED BOLT SLOTS.(NOTE THAT 3 SLOTS ARE LEFT AVAILABLE FOR FUTURE PEENING)

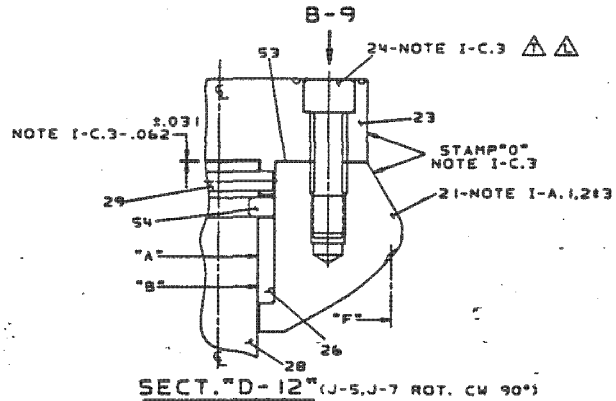

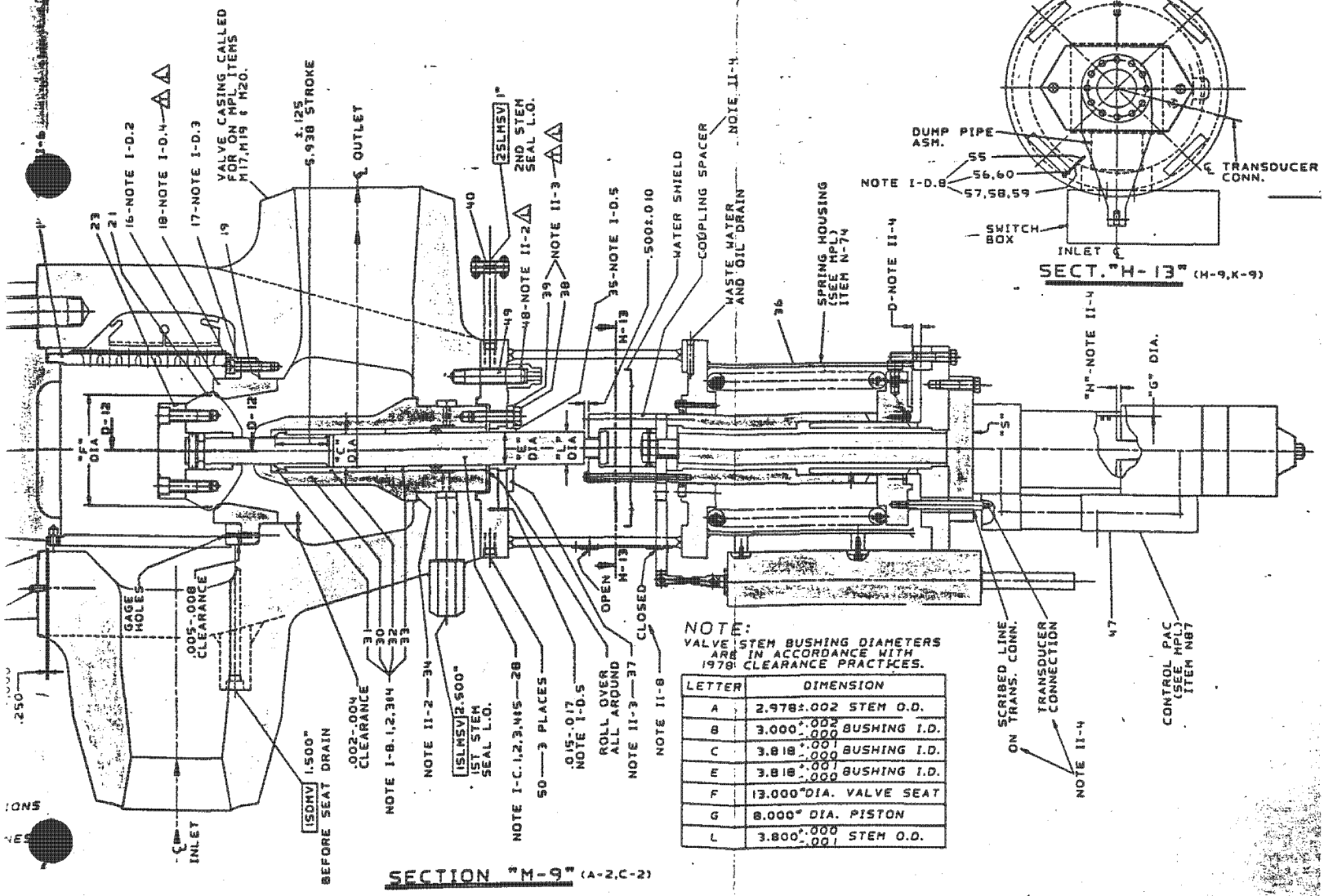

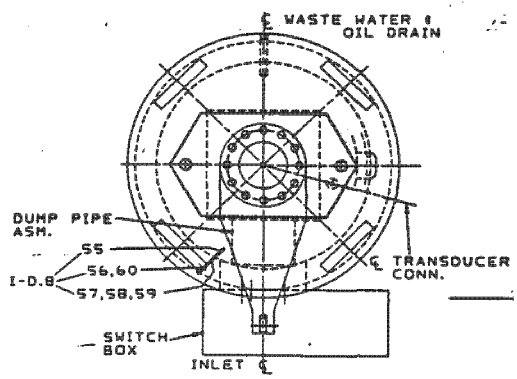

NOTE:
VALVE STEM BUSHING DIAMETERS ARE IN ACCORDANCE WITH 1978 CLEARANCE PRACTICES.

LETTER	DIMENSION
A	2.978±.002 STEM O.D.
B	3.000 +.002 -.000 BUSHING I.D.
C	3.818 +.001 -.000 BUSHING I.D.
E	3.818 +.001 -.000 BUSHING I.D.
F	13.000" DIA. VALVE SEAT
G	8.000" DIA. PISTON
L	3.800 +.000 -.001 STEM O.D.

Main Stop Valve Assembly Fig. 8-
Dwg 884F959 Rev 2

IP7010111

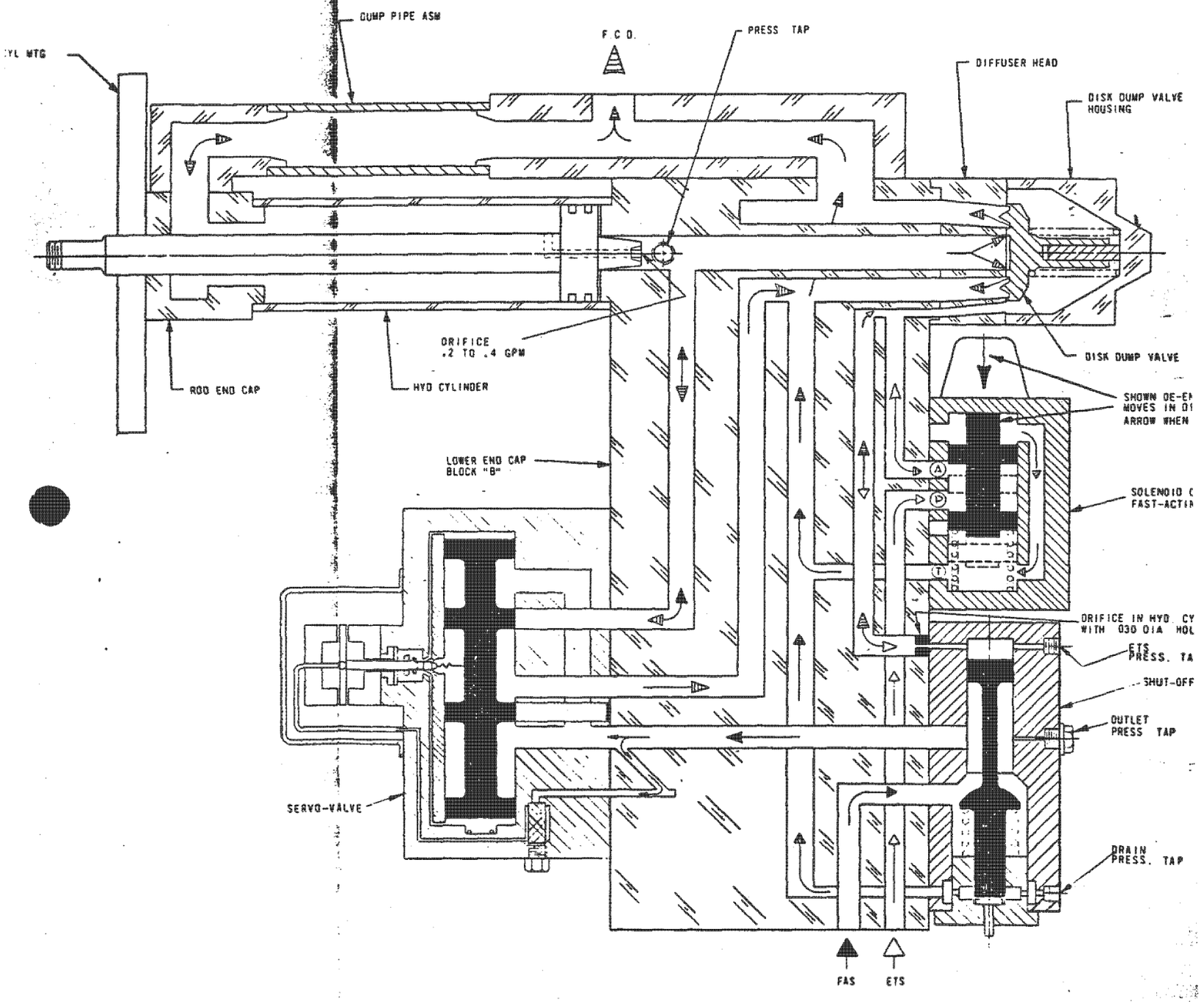

FLUID FLOW DIAGRAM

IP7010112

RLR

Nomenclature

1 Assembly
2 Control Valve
3 Assembly
5 Seat
6 Pin
7 Stand Lower
8 Stand Upper
9 Stud
10 Nut
11 Gasket
12 Balance Sleeve
13 Pin
14 Bushing Inner
15 Bushing Outer
16 Valve
17 Screw
18 Valve
19 Stem
20 Pin
21 Retainer
22 Bolt
23 Lock Plate
24 Dowel
25 Bolt
26 Lock Plate
27 Crosshead
28 Pin
29 Guide
30 Lever Lower
31 Bushing
32 Spring Seat
33 Spring Inner
34 Spring Outer
35 Pull Down Plug
36 Pull Down Bolt
37 Pivot Bracket
38 Shim
39 Bolt
40 Lock Plate
41 Dowel
42 Dowel
43 Stud
44 Nut
45 Stud
46 Nut
47 Lever Upper
48 Link
49 Pin
50 Pin
51 Pin
52 Bushing
53 Thrust Ring
54 Anti Rotation Bar
55 Screw
56 Lock Plate
57 Anti Rotation Bar
58 Carbon Bushing
59 Thrust Washer
60 Cover
61 Screw
62 Bushing
63 Shaft
64 Spacer
65 Bar
66 Bolt
67 Bar
68 Bolt
69 Nut
70 Tension Rod Assembly
71 Push Rod
72 Bushing
73 Bracket
74 Bolt
75 Lock Plate
76 Grease Fitting
77 Bushing
78 Pin
79 Pin
81 Lock Plate
82 Bolt
83 Lock Washer
84 Bushing
100 Preservation Procedure
101 Hydro Test
200 Power Actuator

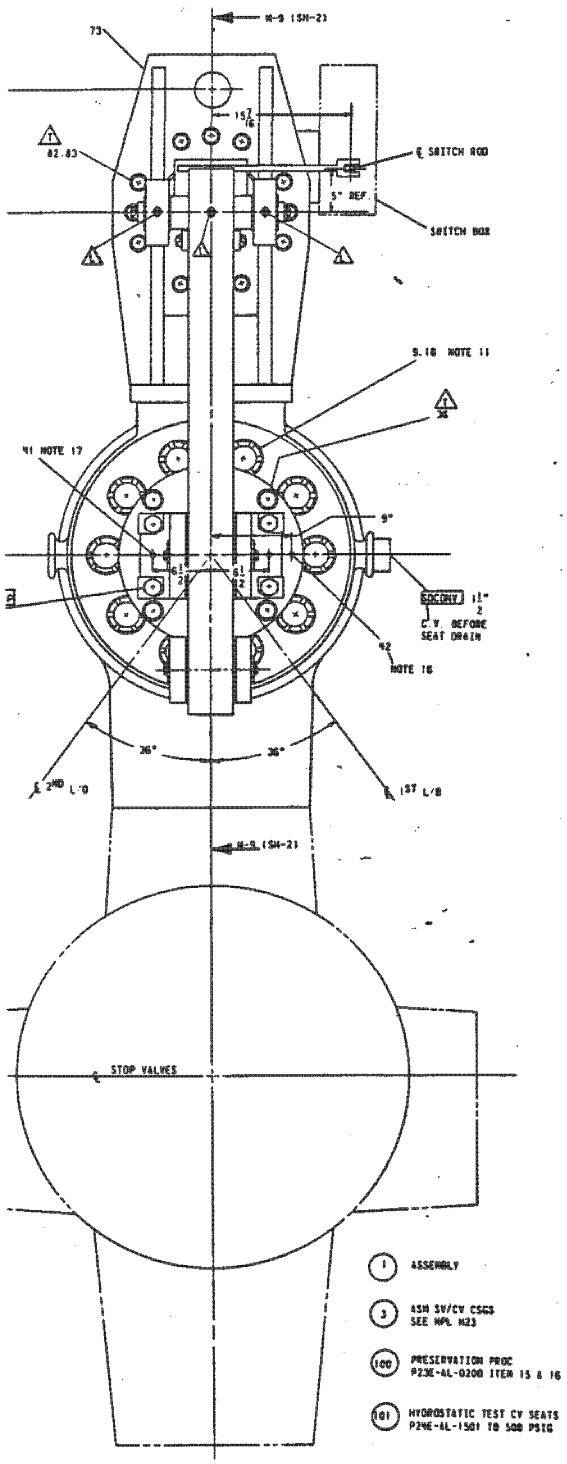

Control Valve Assembly
Dwg 923E590 Rev 1

Fig. 8-5

IP7010113

CONTROL VALVE LINKAGE RLR

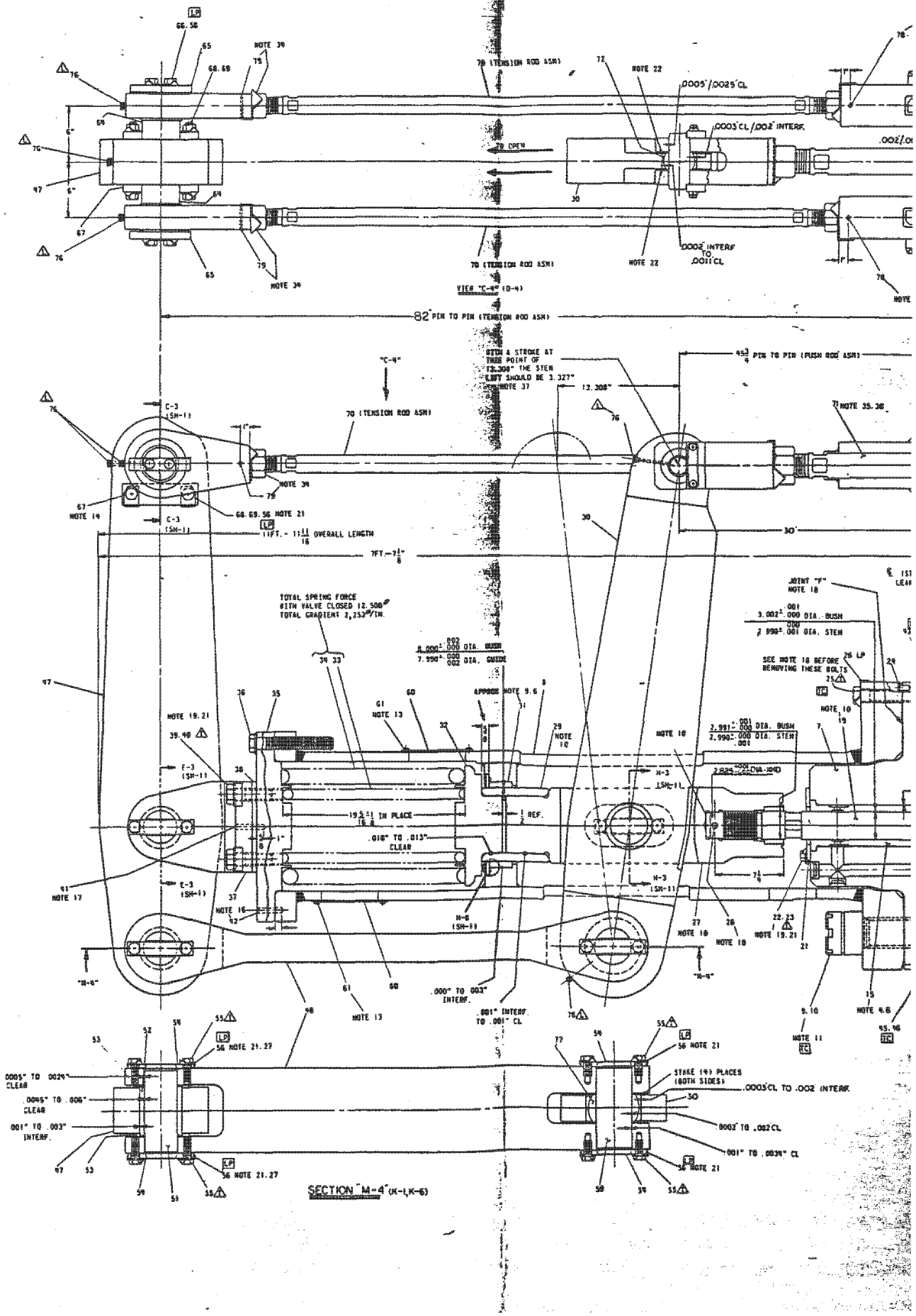

IP7010114

CONTROL VALVE BODY RLR

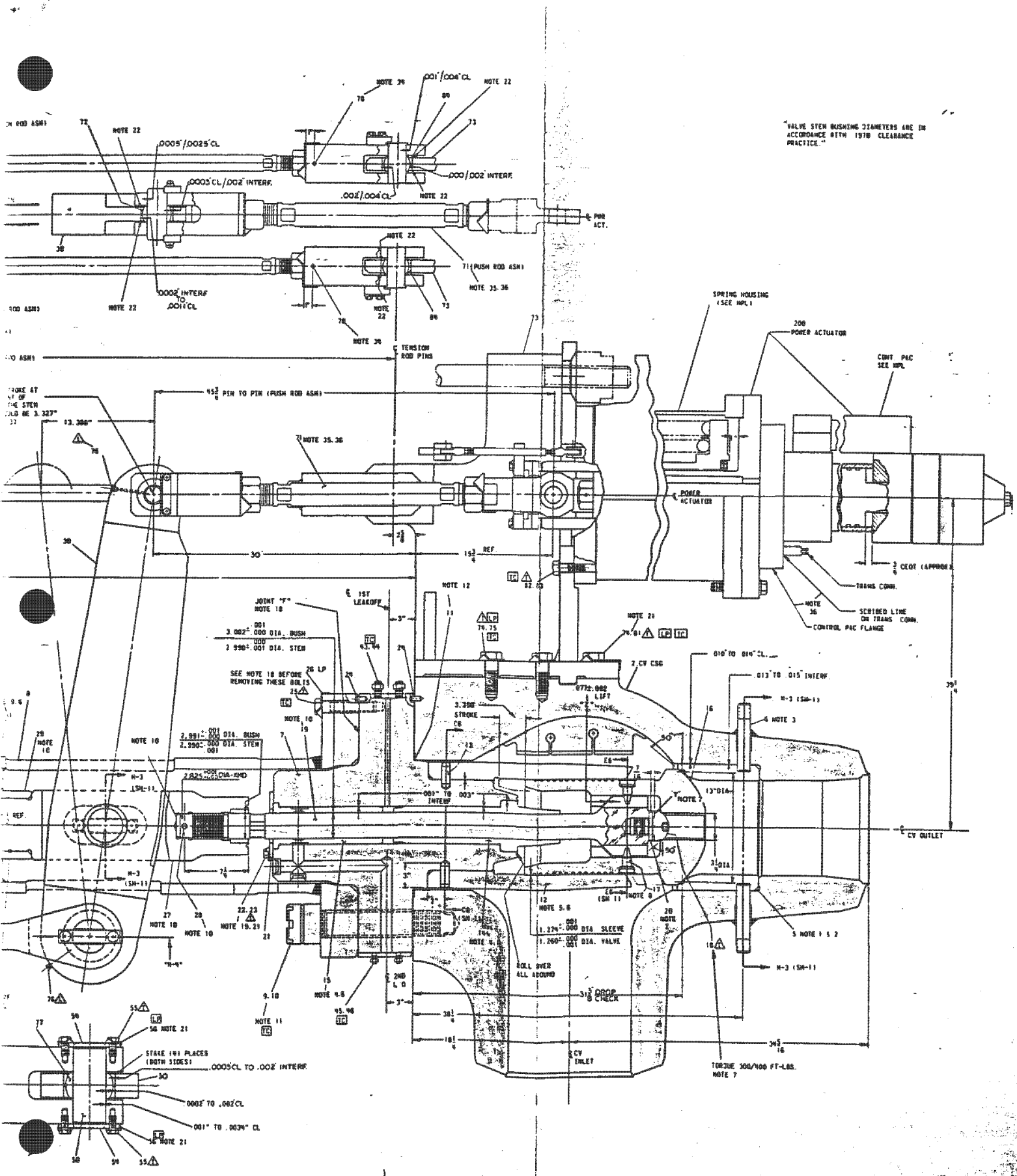

Control Valve Assembly

Fig. 8-5A

IP7010115

COMBINED REHEAT VALVE INLET RLR

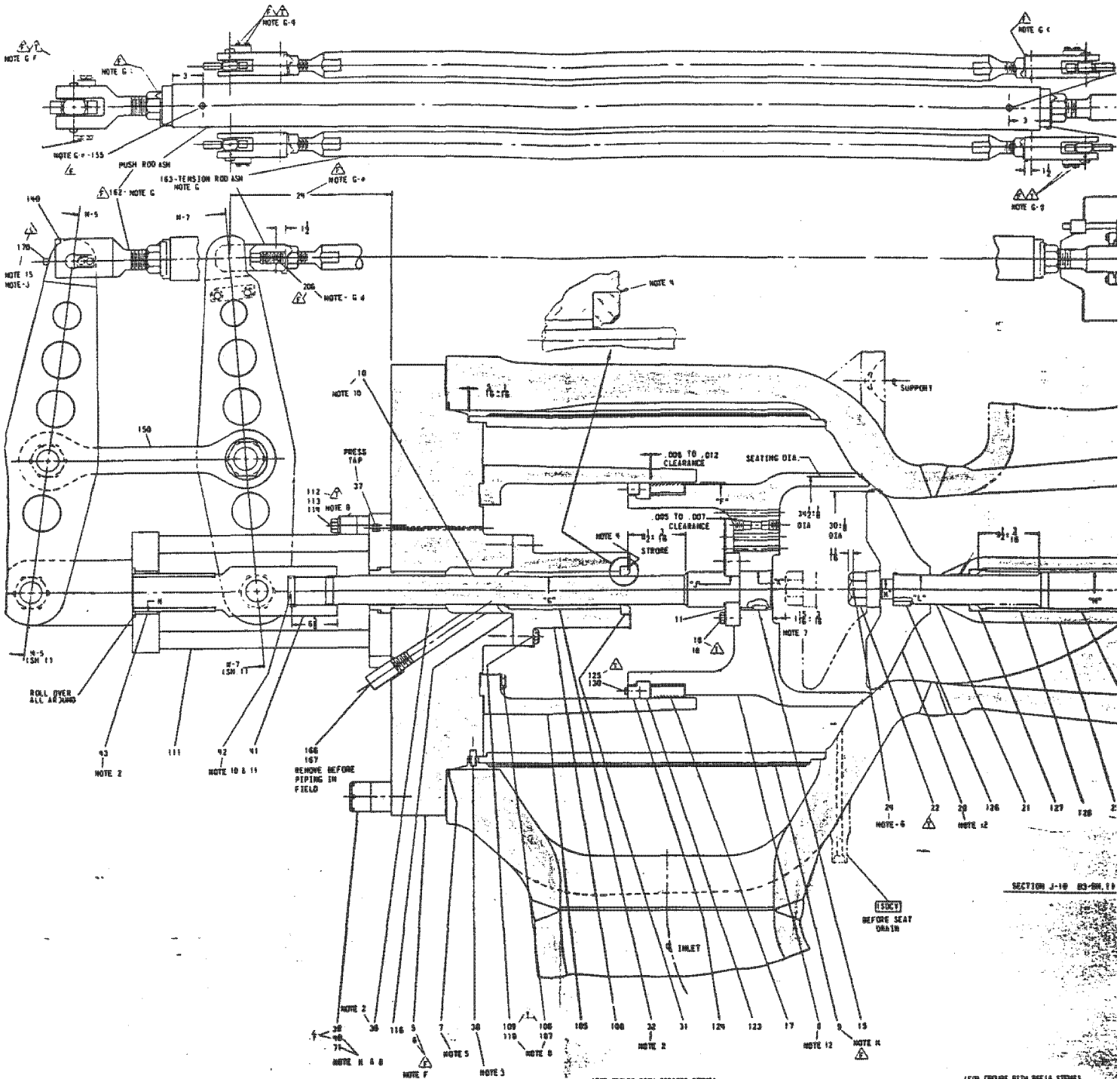

(FOR GROUPS WITH 850A305 STEMS)

LETTER	OUTSIDE DIA.	INSIDE DIA.
F	33.342" .000/.001 SEAL RING	33.375" .002/.000 BAL. CHAMBER
G	4.486" .000/.001 STEM	4.504" .001/.000 BUSHING
H	5.483" .000/.001 STEM	5.500" .001/.000 BUSHING
J	3.990" .000/.001 STEM	4.000" .001/.000 RING
K	5.613" .000/.001 STEM	5.625" .001/.000 VALVE
L	4.499" .000/.001 STEM	4.500" .001/.000 VALVE
M	2.999" .000/.001 STEM	3.000" .001/.000 VALVE
N	5.740" .000/.001 CROSSHEAD	5.750" .002/.000 BUSHING

(FOR GROUPS WITH 850E16 STEMS)

LETTER	OUTSIDE DIA	INSI
F	33.342" .000/.001 SEAL RING	33.375
G	4.486" .000/.001 STEM	4.504
H	5.486" .000/.001 STEM	5.500
J	3.990" .000/.001 STEM	4.000
K	5.613" .000/.001 STEM	5.625
L	4.499" .000/.001 STEM	4.500
M	2.999" .000/.001 STEM	3.000
N	5.740" .000/.002 CROSSHEAD	5.750

IP7010116

COMBINED REHEAT VALVE OUTLET RLR

"VALVE STEM BUSHING DIAMETERS ARE IN ACCORDANCE WITH 1978 CLEARANCE PRACTICE."

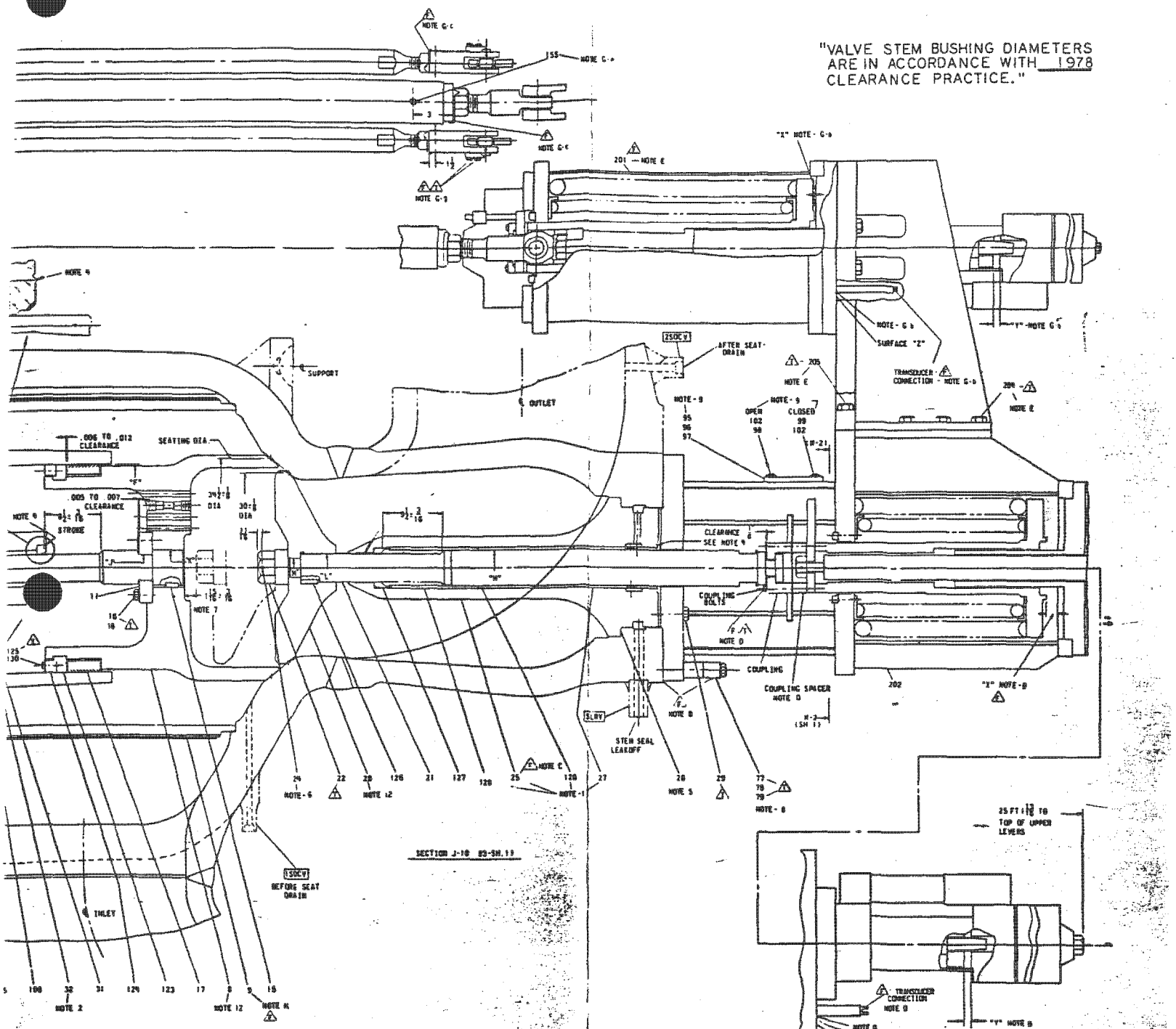

(FOR GROUPS WITH 850A305 STEMS)

OUTSIDE DIA.	INSIDE DIA
33.342" +.000 -.001 SEAL RING	33.375" +.002 -.000 BAL. CHAMBER
4.486" +.000 -.001 STEM	4.504" +.001 -.000 BUSHING
5.483" +.000 -.001 STEM	5.506" +.001 -.001 BUSHING
3.990" +.000 -.001 STEM	4.000" +.001 -.000 RING
5.613" +.000 -.001 STEM	5.625" +.001 -.000 VALVE
4.499" +.000 -.001 STEM	4.500" +.001 -.000 VALVE
[illegible] STEM	3.000" +.001 -.000 VALVE
[illegible] CROSSHEAD	5.750" +.002 -.000 BUSHING

(FOR GROUPS WITH 850E16 STEMS)

LETTER	OUTSIDE DIA	INSIDE DIA.
F	33.342" +.000 -.001 SEAL RING	33.375" +.002 -.000 BAL. CHAMBER
G	4.486" +.000 -.001 STEM	4.504" +.001 -.000 BUSHING
H	5.486" +.000 -.001 STEM	5.506" +.001 -.000 BUSHING
J	3.990" +.000 -.001 STEM	4.000" +.001 -.000 RING
K	5.613" +.000 -.001 STEM	5.625" +.001 -.000 VALVE
L	4.499" +.000 -.001 STEM	4.500" +.001 -.000 VALVE
M	2.999" +.000 -.001 STEM	3.000" +.001 -.000 VALVE
N	5.746" +.000 -.002 CROSSHEAD	5.750" +.002 -.000 BUSHING

Combined Reheat Valve Assembly
Dwg. 923E598 Rev. 0

Fig. 8-9A

IP7010117

IPP GENERATOR RLR

NOMENCLATURE

1 - Generator rotor
2 - Oil deflector (outside)
3 - Generator bearing (turbine end)
4 - Bearing ring
5 - Bearing cap
6 - Hydrogen seal (turbine end)
7 - Oil deflector (inside)
8 - Outer end shield (turbine end)
9 - Fan nozzle shield
10 - Flexible water connection
11 - Header, stator cooling
12 - Bushing
13 - "P" winding connections to reactor
14 - Reactor
15 - Reactor neutral connections
16 - Reactor base plate
17 - Excitation transformer
18 - Transformer base plate
19 - Internal current transformers
20 - Generator neutral lead
21 - Rib nut
22 - Stator connection support
23 - Inside space blocks
24 - Stator punchings
25 - Stator frame flanges
26 - Outside space blocks
27 - Gap entrance baffle
28 - Facing, stator frame flange
29 - End winding support
30 - Stator winding bar
31 - Oil deflector insulation (inside)
32 - Hydrogen seal insulation
33 - "P" winding connections to transformers
34 - Hydrogen feed pipe
35 - Fan nozzle
36 - Fan blade
37 - Bearing ring insulation
38 - Oil deflector insulation (outside)
39 - Brush-holder rigging
40 - Collector fan
41 - Brush holder
42 - Collector
43 - Steady bearing
44 - Spring bar
45 - Cooler clamp gasket
46 - Rib (key bar)
47 - Hydrogen cooler
48 - Generator lagging
49 - Stator frame foot
50 - Generator foundation plate
51 - Cooler clamp
52 - Water inlet and outlet connections
53 - Vent tube
54 - Frame extension, lower
55 - Current transformer
56 - High voltage bushing
57 - Collector housing
58 - Collector foundation plate
59 - Standoff bushing
60 - Terminal bushing (hydrogen side)
61 - Terminal plate
62 - Terminal bushing (air side)
63 - Frame extension (lower) access cover
64 - Flexible connection
65 - Stator winding phase connection rings
66 - Alignment key
67 - Exciter cabinet

CROSS SECTION

RLR

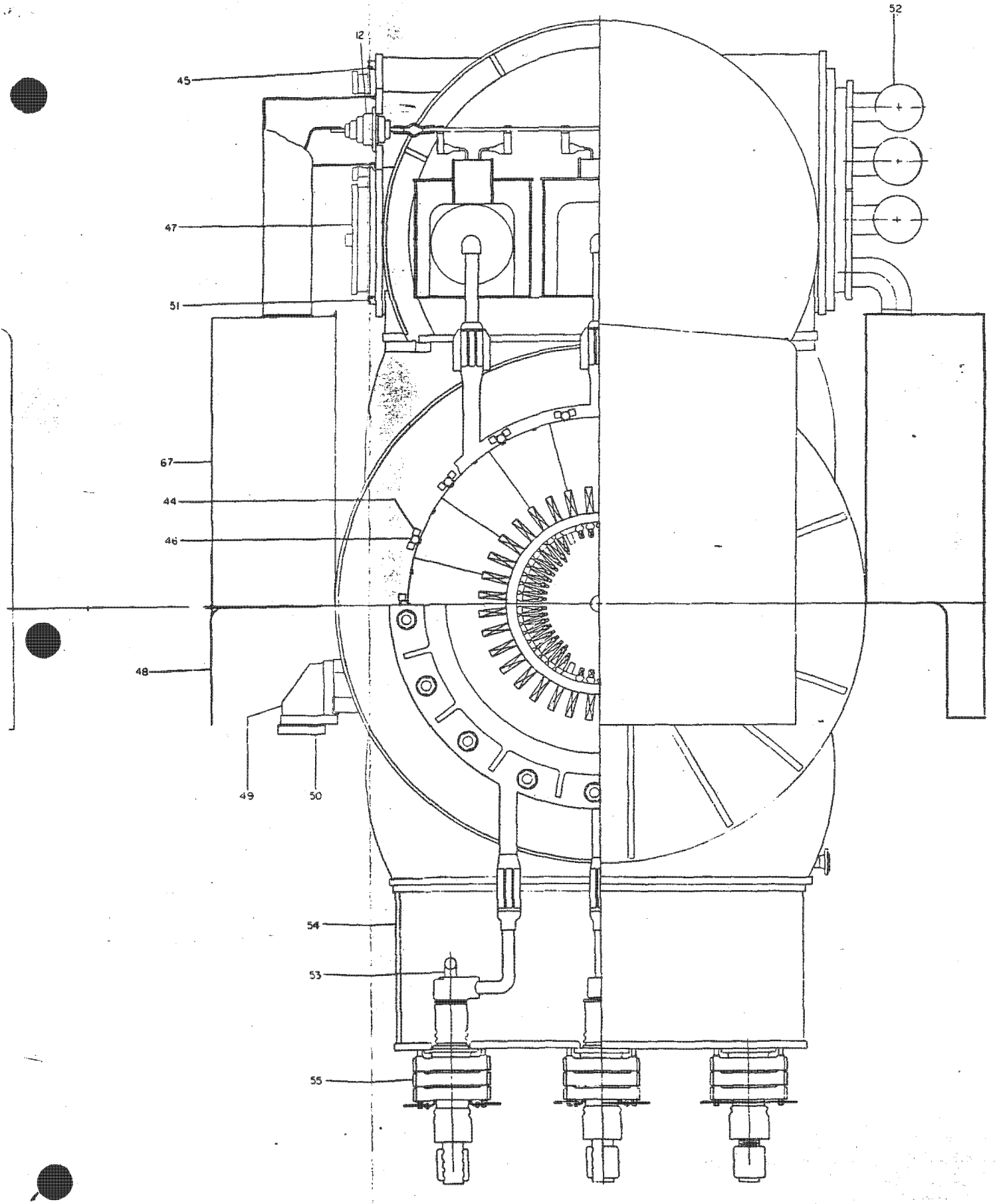

Generator Assembly
Dwg. 252R600 (rev. 0)

Fig. 20-I

IP7010119

TURBINE END RLR

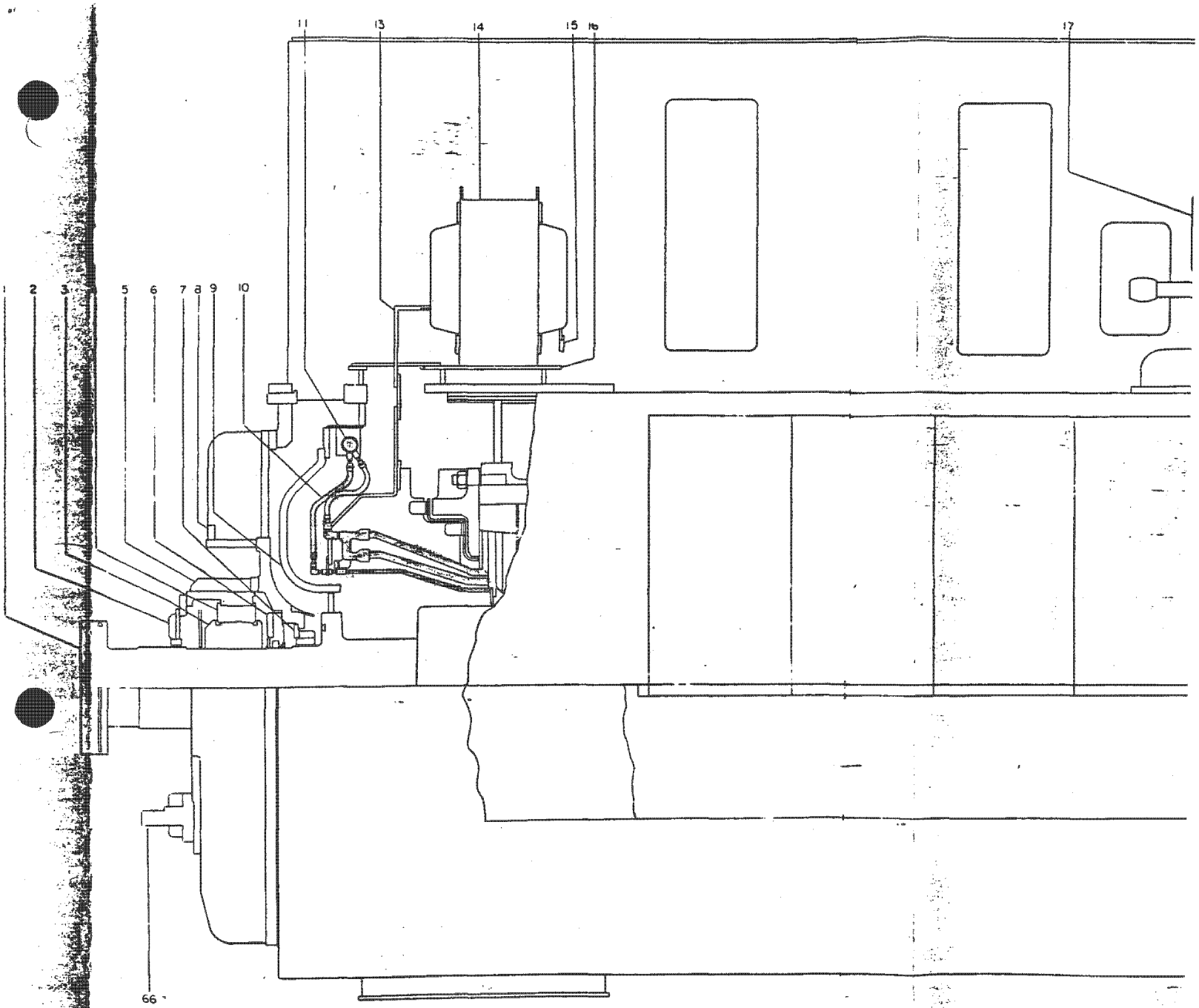

IP7010120

GENERATOR END RLR

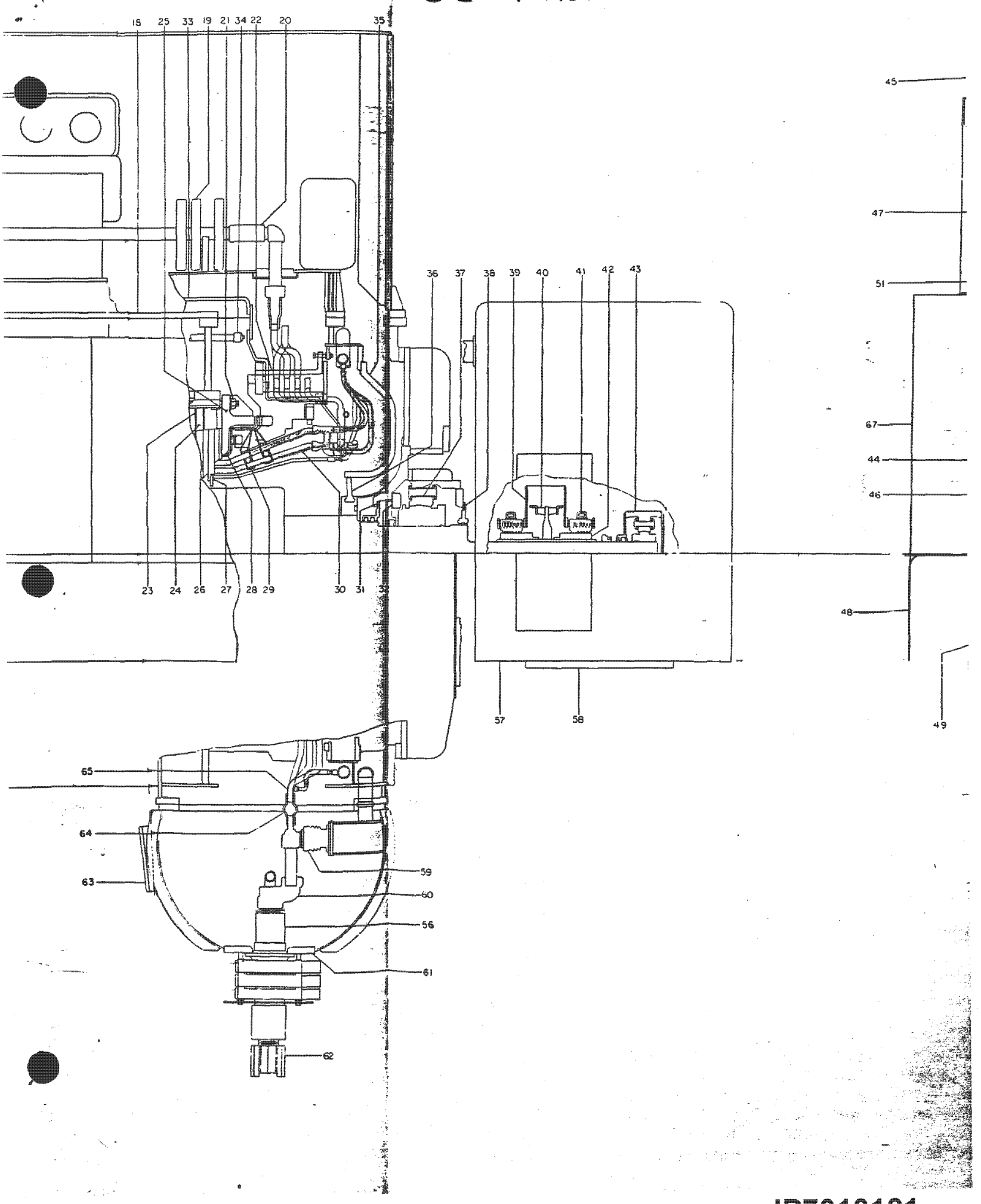

IP7010121

IP7010122

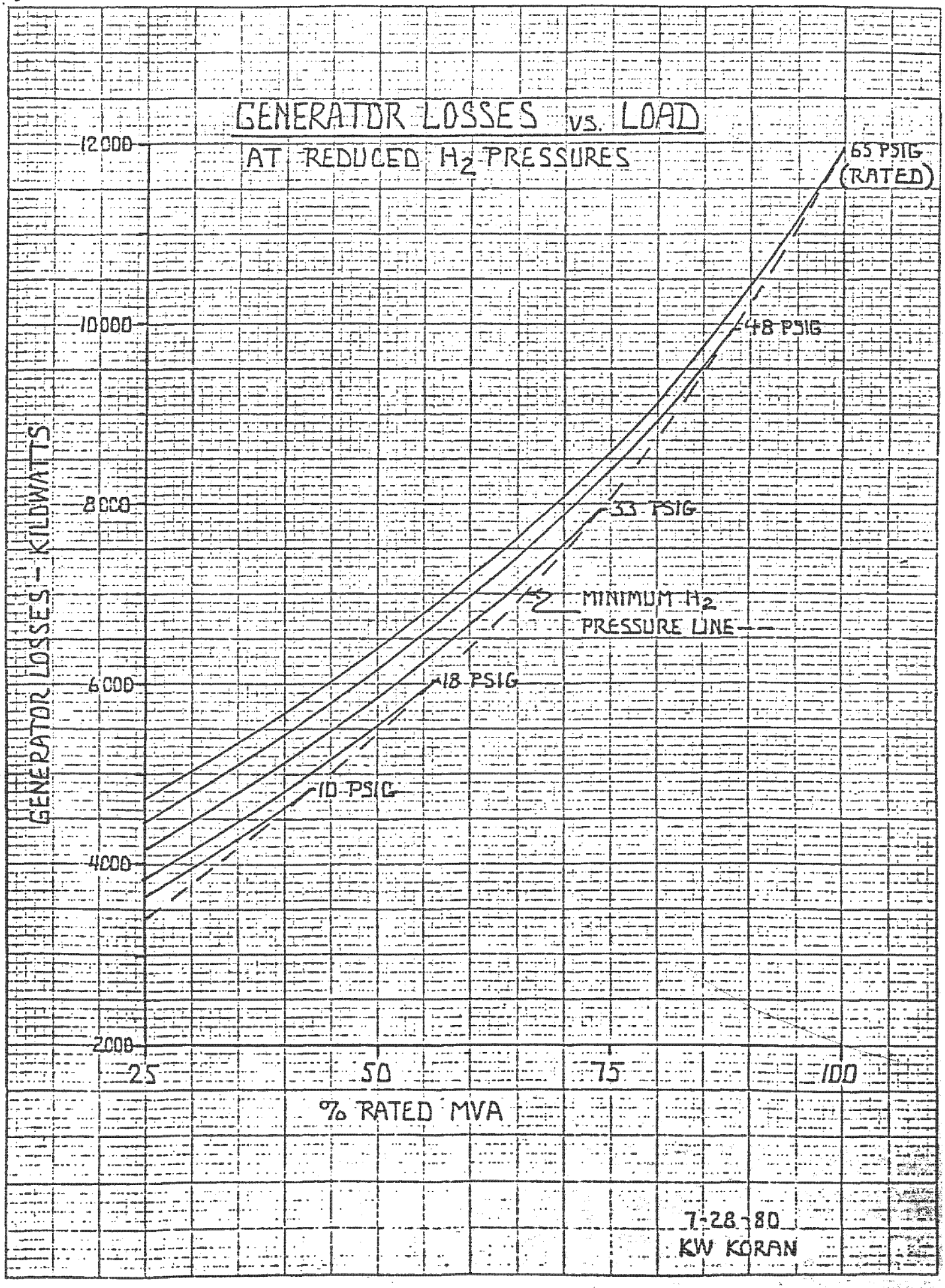
GENERATOR LOSSES vs. LOAD
AT REDUCED H_2 PRESSURES
12000
10000
8000
6000
4000
2000
GENERATOR LOSSES - KILOWATTS
25
50
75
100
% RATED MVA
65 PSIG (RATED)
48 PSIG
33 PSIG
18 PSIG
10 PSIG
MINIMUM H_2 PRESSURE LINE
7-28-80
KW KORAN

IP7010123

TABULATION OF MINIMUM HYDROGEN PRESSURES

AND

GENERATOR LOSSES FOR 63 PSIG DESIGN

Point	Actual H_2 Pressure PSIG	Actual Generator Loss Kilowatts		
		TC4F-33.5	TC6F-30	TC6F-30/33.5
VWO-OP	63	11937	11949	11958
VWO-NP	58	11123	11127	11130
Rating	53	10563	10560	10558
0.85 TFR	44	9323	9303	9292
550 MW	22	6562	6564	6565
380 MW	10	4845	4849	4851

ATTACHMENT #3

IP7010124

TYPICAL SATURATION AND SYNCHRONOUS IMPEDANCE CURVE

FOR STEAM TURBINE-GENERATOR UNIT

ATB 2 POLE, 988,400 KVA, 3600 RPM, 26000 VOLTS
0.90 P.F., 0.58 SCR, 63 PSIG HYDROGEN PRESSURE, 590 VOLTS EXCITATION

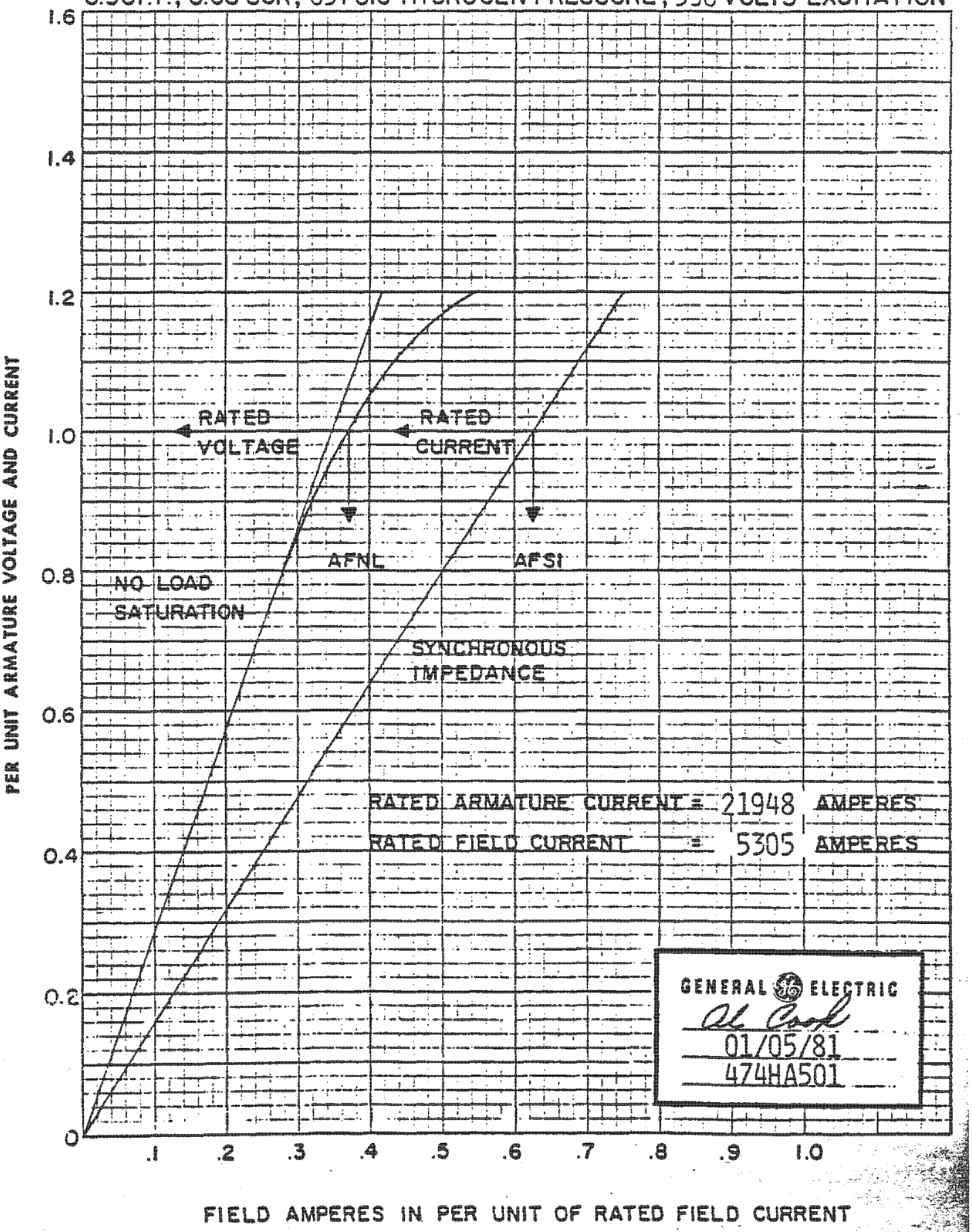

IP7010125

TYPICAL "V" CURVES

FOR STEAM TURBINE-GENERATOR UNIT

ATB 2 POLE, 988,400 KVA, 3600 RPM, 26000 VOLTS

0.90 P.F., 0.58 SCR, 63 PSIG HYDROGEN PRESSURE, 590 VOLTS EXCITATION

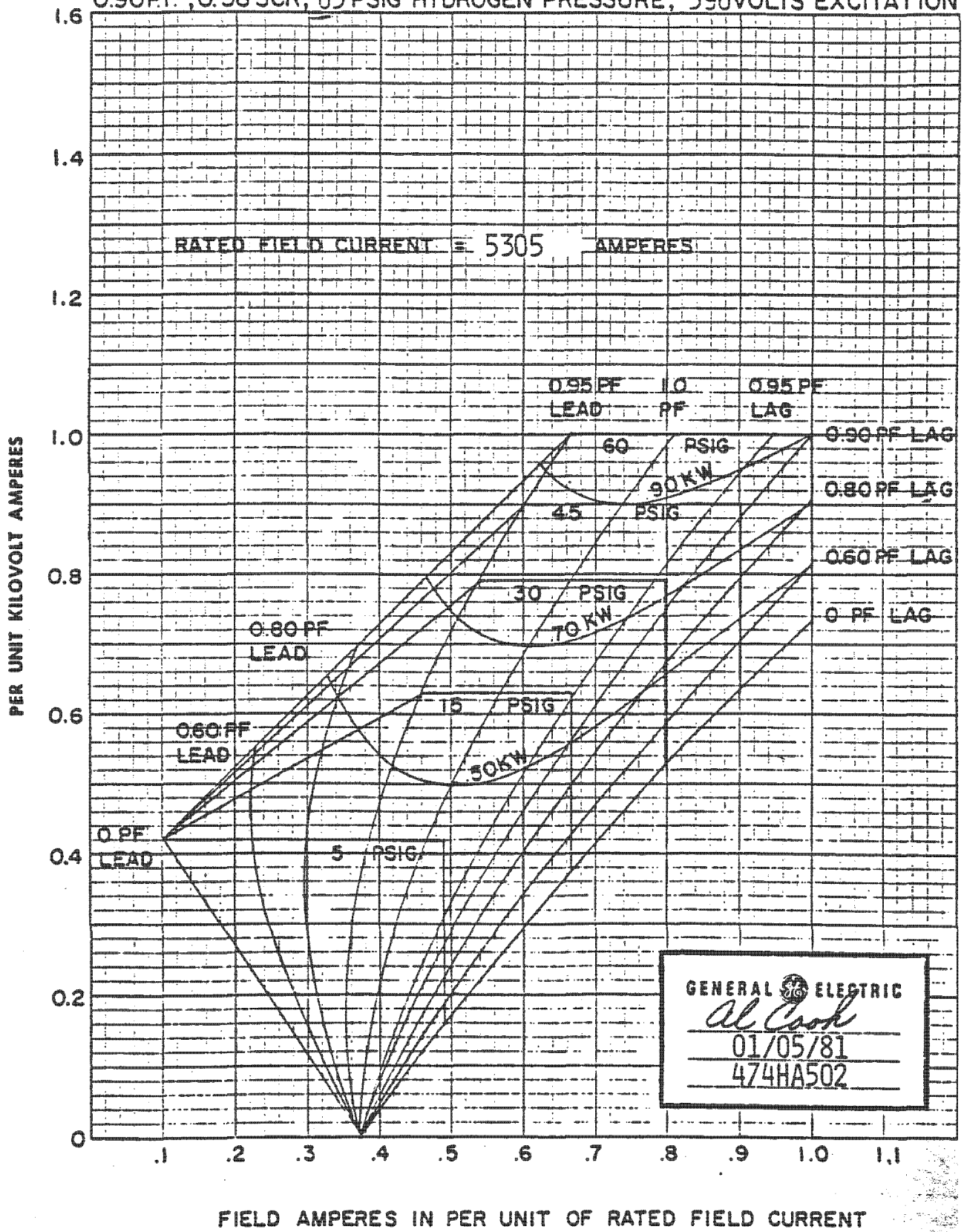

IP7010126

TYPICAL REACTIVE CAPABILITY CURVES

FOR STEAM TURBINE-GENERATOR UNIT

ATB 2 POLE, 988,400 KVA, 3600 RPM, 26000 VOLTS
0.90 P.F., 0.58 SCR, 63 PSIG HYDROGEN PRESSURE, 590 VOLTS EXCITATIO

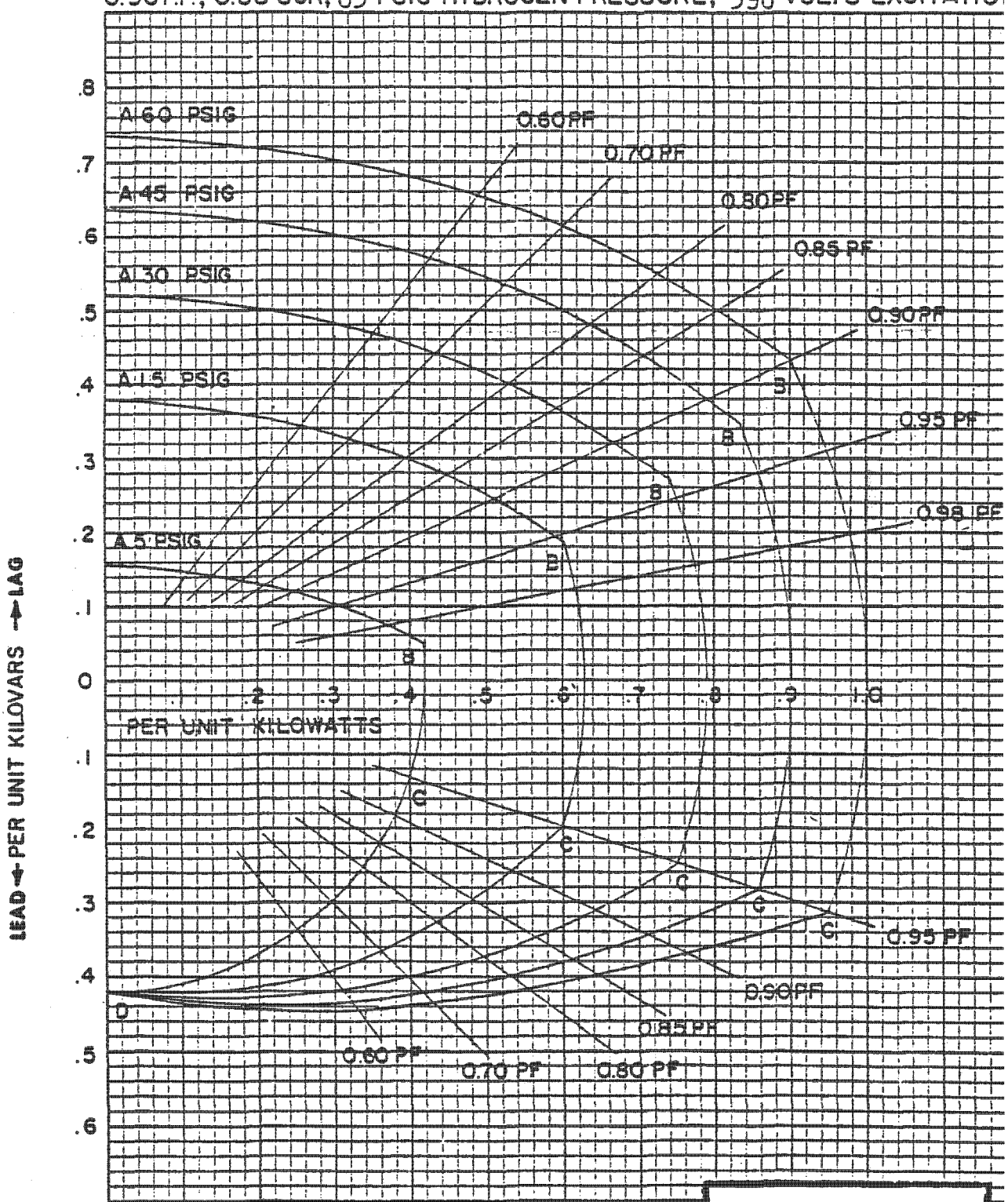

CURVE AB LIMITED BY FIELD HEATING
CURVE BC LIMITED BY ARMATURE HEATING
CURVE CD LIMITED BY ARMATURE CORE END HEATING

GENERAL ELECTRIC
Al Cook
01/05/81
474HA503

IP7010127

TYPICAL FULL LOAD SATURATION CURVE

ARMATURE AMPS CONSTANT AT

FOR STEAM TURBINE-GENERATOR UNIT

ATB 2 POLE, 988,400 KVA, 3600 RPM, 26000 VOLTS

0.90 P.F., 0.58 SCR, 63 PSIG HYDROGEN PRESSURE, 590 VOLTS EXCITATION

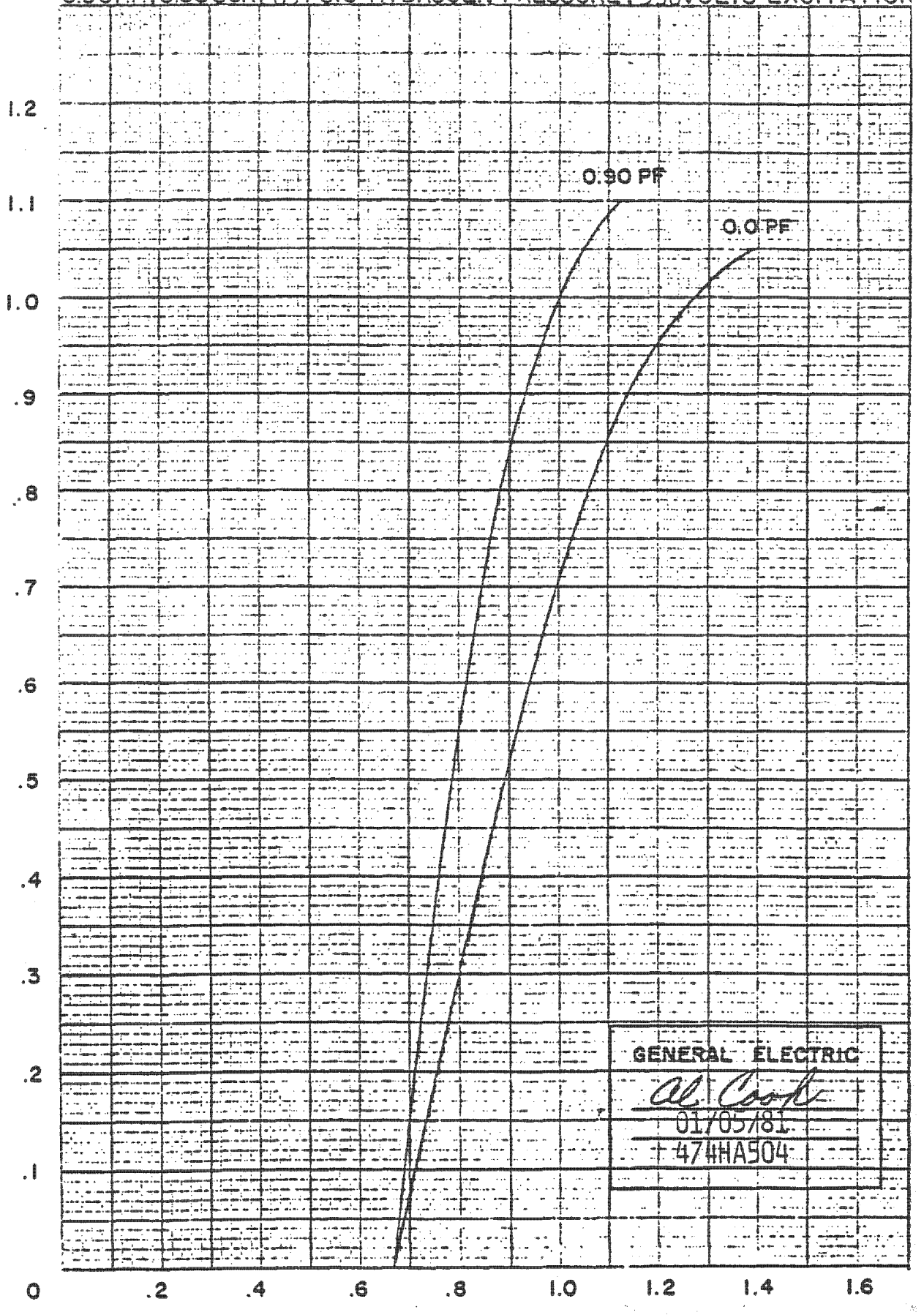

IP7010128