ASS'Y DWNG. NO.:			CUSTOMER: SKF USA				OUR ORDER NO.: 200100360		
COUPLING POS.:			CUST. ORDER NO. 161500				DATE: 020117		SIGN: uud
.	BOLT		SLEEVE		NUT "X"		NUT "Y"		ASSEMBLY
Drawing No			37532						
	HEAT NO	WEIGHT	HEAT NO	WEIGHT	HEAT NO	WEIGHT	HEAT NO	WEIGHT	WEIGHT
1			K56222	1.224					
2				1.226					
3				1.225					
4				1.225					
5				1.226					
6				1.226					
7				1.225					
8				1.226					
9				1.223					
10				1.225					
11				1.226					
12				1.227					
13				1.228					
14				1.225					
15				1.225					
16				1.225					
17									
18									
19									
20									
21									
22									
23									
24									
25									
26									
27									
28									
29									
30									
31									
32									
R1									
R2									
R3									
R4									

80177

IP7007050

INSPECTION CERTIFICATE 3.1B

ACCORDING TO EN 10204

Invoice address	Date	Cert number	Ver	Page
AB HOFORS VERKSTÄDER NITVÄGEN 1-91054	011109	B9429507	2	1
	Our order	Pos		
813 82 HOFORS	0015208	1		

Intended for	Your order	Your art.number
SKF COUPLING SYSTEMS AB	13806-1	
Specification	**Ovako Grade**	**Grade**
SS 2541-03 ENL SPEC MSC 350-3, UTG 3 AV 960429 OCH TSC 001, UTG 1 AV 950816.	356D	

Product

HOT ROLLED BAR.
HARDENED AND TEMPERED.

Extent of delivery

Quantity	Net weight Kg	MO number	Heat Number
9912,0	9912,0	9314972	K5622

OD mm
75,00

Heat number / Chemical composition

Heat number	C %	Si %	Mn %	P %	S %
K5622	0,350	0,260	0,740	0,007	0,025
	Cr %	**Ni %**	**Mo %**	**Cu %**	**Al %**
	1,380	1,330	0,170	0,150	0,028

Continue...

Printed by computer	The requirements stipulated are satisfied	Issuer of certificate Lennart Bergström

OVAKO STEEL AB	Telephone	Telefax	Telefax
S-813 82 HOFORS (Reg.Office)	+46290-25 000	+46290-25025 Tube	+46290-25171 Ring
S-712 80 HÄLLEFORS	+46591-60 000	+46591-60623 Bar	+46290-25272 Steel Plant and Billet Mill

IP7007051

INSPECTION CERTIFICATE 3.1B

ACCORDING TO EN 10204

Date	Cert number	Charge number	Ver	Page
011109	B9429507	K5622	2	2

MECHANICAL TEST RESULTS

Sample	A5 %	Rm N/mm2	RP0.2 N/MM	Z %
459	20,0	977	873	66
460	20,0	977	870	67
461	20,0	971	866	66
462	19,0	984	886	64

HARDNESS HB

Sample	HB
459	301
460	299
461	307
462	309

IMPACT TEST, KU IN JOULE

Sample	KU +20 D
459:1	69
459:2	63
459:3	63
460:1	65
460:2	63
460:3	67
461:1	67
461:2	68
461:3	60
462:1	67
462:2	67
462:3	63

ULTASONIC TESTING OF BAR MATERIAL:

THE MATERIAL IS TESTED IN ONE AUTOMATIC TESTING LINE FOR INTERNAL DEFECTS. TESTING APPROVED.

16 pcs. sleeve/37532

PASSED

2002 -01- 17

Sign. ...

Printed by computer	The requirements stipulated are satisfied	Issuer of certificate Lennart Bergström

OVAKO STEEL AB
S-813 82 HOFORS (Reg.Office)
S-712 80 HÄLLEFORS

Telephone
+46290-25 000
+46591-60 000

Telefax
+46290-25025 Tube
+46591-60623 Bar

Telefax
+46290-25171 Ring
+46290-25272 Steel Plant and Billet Mill

IP7007052

OVAKO Couplings AB

OFC100
Utgåva I
Bilaga 1

MAGNETIC PARTICLE TEST RECORD

DRAWING NUMBER	DESIGNATION	ORDER NO.
37532	HOKBC	200100136O

TEST EQUIPMENT	CURRENT SETTING	CURRENT FLOW METHOD
KARL DEUTSCH HW750 ☒ OTHER:	..... AMPERES	DIRECT CIRCULAR ☐ INDIRECT CIRCULAR ☒ LONGITUDINAL ☐
MAGNETIZATION LEVEL CHECKED W. FLOW INDICATOR YES ☒ NO ☐	DEMAGNETIZATION YES ☐ NO ☒	TEST INSTRUCTION REF.

RESULTS:

QTY TESTED	QTY PASSED	QTY REJECTED
16 pcs.	16 pcs.	

COMMENTS, TYPE & LOCATION OF INDICATIONS., ETC.:

DATE	INSPECTOR	CERTIFICATION	APPROVED
		SNT-TC-1A, LEVEL 1 ☒ -OTHER:.....	wd

IP7007053

Alstom Log Book

U2 HP Replant

Feb 2002

WORKING NO. - 786RS600/006/002.

BEST WESTERN: - 864-3882.
BAR - ROOM 126.
DAVE - " 128.
MICK - " 130.

PHONE DO HOME: - 435 6237465.

SITE FAX 435.864-6603.
SITE PHONE 435.864.6628.

IP7007054

NEW COUPLING THICKNESS = 5.743.

B.I., DRL.

25th FEBRUARY 02.

Replant outline → lectures. A.M.

Removed top ½ inner cyl., matchmarked studs nuts as per inner bolt head c/sheet.

B.I, DRL, M.S.

26th FEBRUARY 02.

Removed top ½ diaphs.

Unboxing / cleaning parts – staging on shelves

Unboxed rotor → measured coupling thickness (see o

Unboxed inlet gland.

B.I., M.S, DRL.

27th FEBRUARY 02.

Cleaned → fitted inlet gland, removed top ½ deflector → top ½ gland.

Torque tightened suspension keys on inlet gland → diaphs 2 thro' 8 incl.

Removed packers, dowels, bolts from inner rear & ba

cleaning in prog.

Removing covers from HP-IP cyls.

M.S., DRL, BI

28th FEBRUARY 02.

Loctited all diaph ½ j/t ref. rings in bott ½ j/ts.

Recorded bott ½ inlet steps.

Recorded inlet sleeve (4 off) I.Dis.

Cleaning top → bott ½ inner cyls. fits → k/ways.

IP7007055

M/C off barring @ approx 10AM.

1ST MARCH 02.

No men available - day off prior to shiftwork.

3RD MARCH 02.

Recorded palm / packer heights / thickness - *mm / very low * - ∴ require re check.
Forced cooling rod bolts.
Undone → removed NO1 pad cover, removed instr.
" " " NO2 " " .
" " " NOS 1 → 2 brg top ½'s.
Removed front top ½ glands. + REAR TOP ½ GLAND

IP7007056

① REMOVE REAR TOP 1/2 GLAND.
② " FRONT → REAR (NOS 1 → 2) BOTT 1/2 OIL SEALS
③. MANUF → FIT DATUM BOLTS FOR OIL SEAL BORES → RECORD.
④. MEASURE FRONT → REAR CYL TO ROTOR DATUMS AS PER DATA SHEET
⑤. REMOVE O/B ROW OF PACKING IN BOTT 1/2 BOLT ON GLAND → RECORD DATUMS AS PER DATA SHEETS.
⑥ FIT BUILD (TEMP) PACKERS → SHIM TIGHT IF NECESSARY RELEASE ALL 1/2 JOINT BOLTS → REPEAT ④ → ⑤
⑦. REMOVE TOP, FRONT GIB KEY.
⑧. JACK UP → REMOVE TOP 1/2 OUTER CYL.
PROGRESS SLACKENING / REMOVAL OF INNER CYL.
MISC:- UNDO HOLD DOWN BOLTS @ HP 4 CORNERS

IP70070057

HP CYLINDER MOVEMENT WHEN RUNNING KEY'S REMOVED. (CYLINDER ON BUILD KEY'S)

LHR ?	RHR ·000"
LHF −·001"	RHF −·001"

No1 o/w BDC :- TOOLSTEEL USED FOR VERTICAL MEASUREMENT (o/w BORE) = 0·998".

NIGHT SHIFT 5 - 7 MARCH 2002 M. STOKES

① REMOVED FRONT + REAR BTM ½ OIL SEAL'S
② FITTED DATUM BOLT'S TO FRONT OIL SEAL AND RECORDED DATUM'S, RECORDED REAR DATUM'S FROM REF-MARK'S STAMPED ON OIL BORE
③ MEASURED FRONT + REAR CYL TO ROTOR DATUM'S, SEE CHECK SHEET
④ REMOVED O/BOARD ROW OF PACKING IN BTM ½ BOLT ON GLAND'S (FRONT + REAR) AND RECORDED DATUM'S
⑤ FITTED BUILD KEY'S TO HP CYL AND REMOVED RUNNING KEY'S RH FRONT + REAR, LH FRONT
* LH REAR TIGHT IN SLOT (REMOVE WHEN LIFTING TOP ½ OUTER) *
⑥ RELEASED ALL ½ JOINT BOLT'S
⑦ REPEATED READING'S AS PER CHECK SHEET
⑧ COMMENCED REMOVAL OF BTM OUTER CYL NUT'S

IP7007058

REQUIRED 8" → 4" SLEEVES. CFM.
" SOFF 1/10 THOU CLOCKS "

Rechecked bolt on gland/rotor rads F → R.
Removed top F gib key, jacked up cyl → removed.
'Stuck' LHS, R packer removed to shelf.
Both leaked inner cyl, jacked up → removed.

SUGGESTED N/S WORK ON HP 4th/5th MARCH 02.

1. RECORD OIL BORES, BOLT ON GLAND RADS, CYL/ROTOR RA
AS PER DATA SHEETS.
2. PROGRESS STRIPDOWN OF DIAPHS/NOZZLE/GLAND TO
EXPOSE ROTOR.
3. REMOVE PUSH/PULL PACKERS, CLEAN, SIZE → RECORD FIE
AS PER DATA SHEETS.
MISC:- REMOVE ROD BOLTS FROM HP TOP 1/2 OUTER CYL FOR
1/2 J/T. CLEANING.

N/S 4TH-5TH MARCH 02 ML.S.

1. REMOVED 4 OFF SLACK PUSH PULL KEY'S
CLEANED AND RECORDED SIZE'S AS PER
DATA SHEET. (SPECIAL JACKING BRACKET
REQ - TO REMOVED TIGHT KEY'S: SEE DIAGRA
SHEET IN LOG BOOK).
2. RECORDED OIL BORES ETC, AS PER DATA SHEET
3. C.F.S. CONTINUE TO REMOVE OLD SEALING
RING'S FROM TOP 1/2 OUTER SHELL
4. COMMENCED STRIPDOWN OF DIAPH'S/NOZZLE/GLAND
TO EXPOSE ROTOR. [TOP 1/2 NOZZLE REMOVED]

* FOUND SPECIAL BRACKET, PLACED ON RHS CYL

IP7007059

INNER/OUTER STEPS (INNER HIGH).

LHF +012. LHR. +024

RHF. +009. RHR. +014.

BRG NO	BLOCK HEIGHTS.	TDC FIG.
1	7"	455"
2	8"	424".

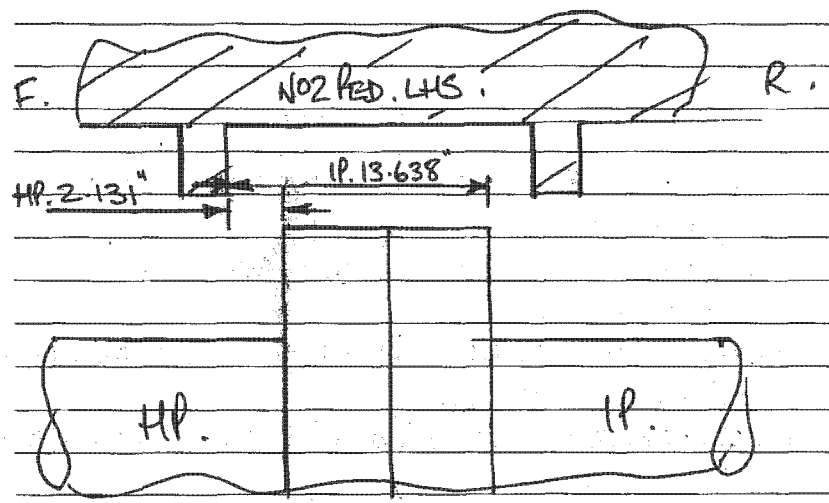

Recorded inner/outer heights – ½ jt to ½ jt (figs
" " " radial datums.
" NOS 1 & 2 brg. bridges (see opp)
" details of oil g. leak off p/work sealing flang
" rotor to A & E axials.
" D & E glands RE's & RC's
" HP & IP axial datums (see opp).
" remaining rings from top inlets & CFM to min
Commenced removal of rod bolts from outer cyl.

SUGGESTED HP WORK N/S 5th | 6th MARCH 02.

1. REMOVE TOP ½ 'B' GLAND & RECORD RE's & RC's PLUS HP ROTOR DATUM (SEE LOG).
2. REMOVE TOP ½ DIAPHS.
3. SPLIT HP-IP COUPLING, ENSURE IP ON THRUST, RECHECK HP DATUM & COUPLING GAP.
4. REMOVE REAR PUSH/PULLS & JACK CYL/ROTOR OFF SPIGOT.
5. ALIGN CHECK HP-IP.
6. MOVE NEW ROTOR TO LATHE. (MARK BEAM FOR FUTURE)

MISC: - REMOVE ROD BOLTS FROM TOP ½ OUTER.
CLEAN ½ JOINTS TOP & BOTT. OUTER CYLS.
CUT RUBBER JOINTING FOR JOURNAL PROTECTION.
MOVE ALSTOM BOX INTO OFFICE.

IP7007060

HP ROTOR DATUM AS FOUND. = 2·132"
IP " " " " = 13·636"

OLD ROTOR COUPLING THICKNESS = 5·760"

HP ROTOR DATUM AFTER SPLITTING COUPLINGS
AND "HARD ON THRUST"? = 2·144"
IP DATUM = 13·641

* IP DATUMS:- 13·640"
* HP DATUM :- 2·140½"
THRUST PAD / BACKING PLATE GAPS:- RHS = OPEN 002"
LHS = " 005"
NO1 INC. = 3½ DIVS F. HIGH.
NO2 INC = 2 DIVS F. HIGH.

① REMOVED TOP ½ GLAND 'B' + RECORDED AXIAL DATUM'S AT LHS.
② RECORDED HP + IP ROTOR DATUM'S
③ REMOVED TOP ½ INLET GLAND AND TOP ½ DIAPH'S
④ MOVED NEW ROTOR TO LATHE
⑤ SPLIT HP - IP COUPLING
⑥ REMOVED REAR PUSH-PULL KEY'S AND JACKED CYL / ROTOR OFF SPIGOT
⑦ RE-RECORDED ROTOR DATUM'S.

D/S. 6th MARCH 02 BI, DRL

Rechecked coupling datums / gaps (see opp).
Unpacked thrust brg + checked rotor on pads (see op
Centralised rotor in brgs + recorded rad. bones @
o/w, bolt n gland + cyl / rotor.
Honing complete in top ½ inlets.
Recorded NOS 1 + 2 journal inclination's (see opp)
" step mic readings inned / outer @ palms.
Removed rotor to box.

IP7007061

OLD ELEVATION PACKER'S

LHF ·641" LHR = ·702"

RHF ·639" RHR = ·635"

① RELEASE / REMOVE HEADS ON INNER CYL & GLAND BOX 'B' HOLD DOWN BOLTS. LIFT OUT BOX 'B'.
② JACK INNER CYL UP OFF FITS FOR REMOVAL.
③ JACK BOTT. OUTER CYL. TO ORIG. POSITION & SIZE / FIT PUSH / PULLS AS PER C/SHEET.
④ SIZE SUPPT. PACKERS " " .
⑤ GLAND BOX STEPS " " .
⑥ REMOVE / SIZE / REFIT ℄ CYL / FED PACKERS AS PER C/SH
MISC: - 1/2 JOINT CLEANING.
Rod bolt removal - top 1/2 outer.

NIGHTSHIFT 6TH/7TH MARCH 02 MLS.

① RECORDED STEP'S ON N1 + N2 BOLT ON GLAND'S AND 'B' GLAND BOX
② RELEASED HOLDING DOWN BOLT'S ON 'B' GLAND BOX AND REMOVED.
③ SIZED SUPPORT PACKER'S SEE SHEET'S
④ COMPLETED CHECK SHEET'S FOR PUSH PULL KEY'S.
⑤ JACKED OUTER CYL TO ORIG POSTION AND FITTED ALL KEY'S.
⑥ JACKED UP INNER CYL AND REMOVED TO LAYDOWN AREA.
⑦ RECORDED OLD ELEVATION PACKER'S SIZE'S, *RHS 3 BROKEN SCREW'S TO BE DRILLED OUT*
⑧ CLEANED OUT BTM 1/2 OUTER CYLINDER AND FITTED BUNG'S TO INLET'S
⑨ REMOVED HP REAR CENTRE LINE KEY'S, SIZED AND REFITTED.

IP7007062

Requested 4 off slave bolts for concrete - sketch submitted
Sized 'old' inner support palm thickness, lifted
inner, sized new palms, ground off transport blocks.
Measured both 1/2 ℄ keys/ways, keys with CFM for m/c
Attempted removal of rear hold-down bolt shanks - failed
Removed sealing rings from both. inlets.,
commenced honing.
Measured new palm 'C' clearances as requested.

SUGGESTED HP N/S WORK. 7th/8th MARCH 02.

1. CONTINUE FRONT & KEY PACKER REFURB.
2. 'B' GLAND: - REMOVE | CLEAN | REFIT LEDGE PACKERS, CLEAN
FITS & POSITION GLAND IN C/L, RECORD DETAILS AS PER C/
3. TOP 1/2 OUTER: - SIZE KEYS/KEYWAYS FRONT & REAR A
PER C/SHEET.
4. REMOVE REDUNDANT PACKING (TOPS & BOTTS) AS PER
IPS, PREP SLOTS FOR NEW (LABEL & STORE 'OLD').
5. CFM TO M/C 4 OFF KEYS FOR BOTT 1/2 INNER, FIT
WHEN AVAILABLE & SIZE FINAL WIDTH.
6. CFM TO M/C BROKEN FASTENERS IN BOTT. OUTER C/L.
— ASSIST WHEN NECESSARY.
MISC: - REMOVE ROD BOLTS
CLEAN 1/2 JOINTS.

IP7007063

① REMOVED HP FRONT CENTRE LINE KEY'S SIZED AND REFITTED SEE CHECK SHEET.
② REMOVED / SIZED / CLEANED / REFITTED LEDGE PACKER'S 'B' GLAND.
③ FITTED 'B' GLAND TO POSITION IN CYL AND RECORDED DETAIL'S AS PER CHECK SHEET
④ RECORDED TOP ½ OUTER CYL TO INNER KEY SIZE'S.
⑤ REMOVED PACKING FROM TOP + BTM ½ GLAND'S AS PER DIRECTION (LABELLED AND STORED)
GLAND'S TO BE SHOT BLASTED
BROKEN SCREW'S IN TOP ½ RETAINING PLATE'S TO BE DRILLED OUT.
⑥ C.F.S FINISHED HONING OF BTM ½ OUTER CYL INLET CONNECTION'S AND STARTED CLEANING UP RETAINING SEGMENT GROOVE'S
⑦ C.F.S SETTING UP FOR DRILLING HOLD DOWN BOLT'S IN BTM ½ OUTER.

IP7007064

M/ced & fitted front inner locator & key packers.
" " " rear " " " " " "
'Faro' readings in top & both 1/2 outer cyls. complete.
Honed both 1/2 inlets.
Cleaned slots in glands F+R both ons, both 1/B (both 1/2's) top 1/2 bolt ons.
Removing sealing rings from heater connection flange
M/ced broken RHSR hold down, continuing LHSR.
Received 4 off stave bolts for LP-HP coupling.
SUGGESTED HP N/S WORK 8th/9th MARCH 02.

① HP INNER: - CFM TO FINISH LHSR HOLD DOWN M/C'ing, CLEAN OUT CYL & FIT INNER TO PLACE ON ORIG. PACKERS. BLUE CHECK FOR CONTACT.
② CHECK LOADING @ EACH SUPPORT WITH JACK/CLOCK, SUGGEST 005" LIFT = _____ psi.
③ RECORD CYL. INCLINATIONS IN BOTH PLANES.
④ SET CYL AXIALLY ON STEAM BAFFLE, RECORD APPROX. RAD. OFFSETS.
⑤ FIT "B" GLAND.

MISC: - CFM TO M/C O.D. OF GIB KEY TO SUIT OUTER CYL
" CONTINUE BROKEN FASTENER REMOVAL IN 'B' GLAND
OBTAIN/MANUF WEDGES (FITTING OLD SEGS @ LHS ON A, B, D & E GLANDS, ROU WEDGES TOP & BOTTOM OF SEGMENT)
HP OUTER ROD BOLT REMOVAL.
CLEAN OUTER CYL 1/2 JOINTS.

IP7007065

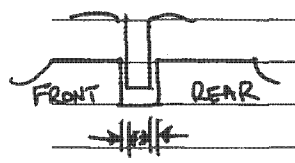

LHR	RHR
·123"	·140"
LHF	RHF
·123"	·108"

LOADING CYLINDER LIFTED BY ·005"

LHR = 2,900 PSI RHR = 1,700 P.S.I.

LHF = 2,100 PSI RHF = 3,000 P.S.I.

INCLINGNATION'S

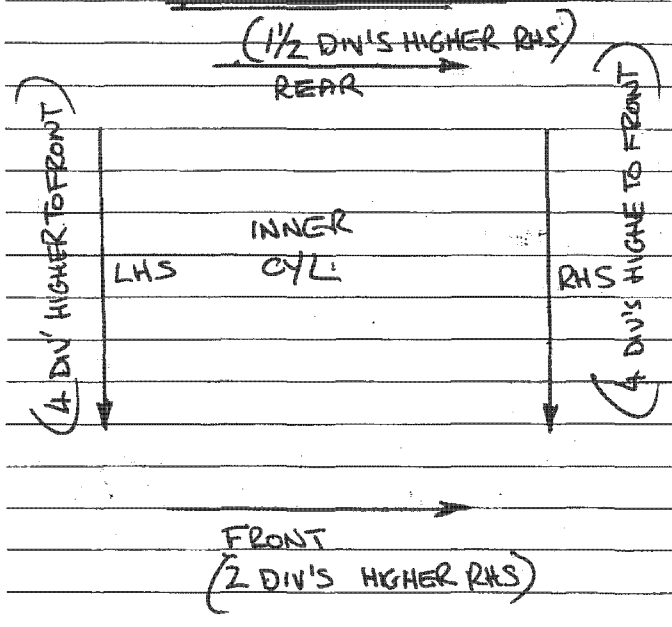

RADIAL DATUM'S

LHR = ·070"
LHF = ·175" ('B' GLAND HARD TO LHS)

RHR ·032"
RHF - 170"

① FINISHED BORING OUT LHS REAR HOLDING DOWN BOLT
② DRILLED AND TAPPED BROKEN SCREW'S FOR ELEVATION PACKER'S RHS.
③ C.F.S M/CD NEW GIB KEY O/D TO SUIT OUTER CYLINDER
④ CLEAN OUT BTM ½ OUTER CYL AND FITTED NEW INNER ON TO ORIG-SUPPORT'S, BLUE CHECKED FOR CONTACT, RHR LIGHT ON BLUE BUT FEELER TIGHT,
⑤ CHECKED LOADING ON ALL FOUR CORNER'S
⑥ RECORDED CYL INCLINGNATION'S IN BOTH PLANE'S.
⑦ SET CYLINDER AXIALLY WITH STEAM BAFFLE + RECORDED RADIAL OFFSET'S WITH S/EDGE.
⑧ FITTED 'B' GLAND AND ALL PACKER'S FITTED ON LHS AND WEDGED UP
⑨ REMOVED BROKEN SCREW'S FROM 'B' GLAND TOP ½

IP7007066

Recorded inner/outer steps & steam baffle rads.
Rotor setting gauge tied to stand for use.
Refitted NO2 brg to ped, rigged rotor & fitted to place on axial setting gauge.
Recorded glands A, B, D & E RE's & RCs, rechecked RE's & RCs gland D as requested.
Recorded C's (rotor balance plane/bolt a gland).
" shaft/inner bridges.
" works build datums.
" rotor/NO2 ped ax. datum
fitted alternate "clean" bolts to HP top½ outer (LHS)

SUGGESTED HP N/S WORK 9th/10th MARCH 02.

① FIT RHS SIDE SEGS TO GLANDS A, B, D & E, RECORD RADIACS LH & RHS.
② RECORD "TOPS OFF-ROTOR CENTRALISED" RADS AS PER CL SHEET.
③ RECORD AXIAL DATUM FROM HP REAR COUP/PED, RECONFIRM 'OLD' & 'NEW' COUPLING THICKNESS.
④ RECORD 1st & LAST STAGE SHROUD & DIAPH RADS (LEAVE SKETCH)
⑤ RECORD JOURNAL INCLINATIONS & BRIDGES (SEE LOG 5.3.02)

MISC: - CLEAN BOTT ½ OUTER C/L "TONGUE" & MEASURE FOR AXIAL KEYS.
CFM CHECK REAR HOLD DOWN BOLTS FIT OK, MARK OUT FOR FRONT.
CONTINUE HP TOP ½ OUTER ROD BOLTS.
" " " " CLEANING.

IP7007067

BRIDGE GAUGE'S

	BLOCK HEIGHT		TDC FIG
BRG Nº1	7"	=	·458
" Nº2	8"	=	·429

COUPLING THICKNESS

OLD ROTOR = 5·758"
NEW " = 5·742"

JOURNAL LEVEL'S

Nº1 = 5 DIV'S HIGHER TO FRONT
Nº2 = 3 " " " "

AXIAL DATUM (HP REAR COUPLING TO PED)
= 2·092"
SECONDARY AXIAL DATUM (HP REAR COUPLING TO BRG)
= 5·697".

① FITTED RHS GLAND PACKER'S A, B, D + E, AND RECORDED RADIAL'S LHS + RHS.
② RECORDED "TOPS OFF ROTOR CENTRALISED" RADIAL'S AS PER CHECK SHEET (NEW ROTOR)
③ RECORDED AXIAL DATUM FROM HP REAR COUP TO PED, RECHECKED 'OLD' + NEW COUPLING THICKNESS
④ RECORDED 1ST AND LAST STAGE SHROUD & DIAPH RAD'S + INLET GLANDBOX FRONT + REAR
⑤ RECORDED JOURNAL LEVEL'S AND BRIDGES.

D/S. 10th MARCH 02. DRL, B1.

Recorded secondary HPR. coupling to brg axial datum as requested.
Checked fit of rear hold downs thro' cyl - OK, drilled & tap F hold down — neat. tapping.
Removed rotor, 'B' glanded → both ½ cyl.
M/ced - shimmed & keys F & R according to moves, sized key & k/way :- OK.

IP7007068

END OF NOZZLE'S TO CYL ½ JOINT

TOP ½ LHS = 64·594"
RHS = "
BTM ½ LHS = "
RHS = "

① CONTINUE M/CING ELEVATION PACKERS AS PER LIST.
(NB RHF U/S, MANUF FLAT PLATE 0·618").
② CLEAN 'TONGUE' IN BOTT & TOP OUTERS RELATIVE TO AXIAL KEYS.
③ FIT DOWELS FOR AXIAL KEYS.
④ REMOVE ALL 'OLD' SEGS FROM OUTER CYL, FRONT & REAR ROWS IN INLET GLAND, STGS 2 & 8 FOR LASER (LABEL & STORE).
⑤ MEASURE ENDS OF NOZZLE TO ½ J/TS (TOP & BOTT ½'s)
⑥ WHEN ① COMPLETE REFIT INNER TO PLACE & 'B' GLAND
MISC:- CFM MANUF. 2 OFF AXIAL KEYS (TEMPS) x 1·000" THK
DRILL NEW SUPPT. PACKERS AS PER ORIG CENTRES, NEW DETAILS ON DRG.
½ J/T. CLEANING.

NIGHT SHIFT 10th/11th MARCH 2007 MLS

① REMOVED ALL 'OLD' SEG'S FROM OUTER CYL + FRONT + REAR ROW'S IN INLET GLAND, STG'S 2 & 8 FOR LASER (LABEL + STORE)
② FITTED DOWEL'S FOR AXIAL KEY'S
③ MEASURED END'S OF NOZZLE'S TO INNER CYL ½ JOINT'S (TOP + BOTT ½ s).
④ CONTINUED M/CING ELEVATION PACKER'S AND REFITTED TO CYL
⑤ CLEANED TONGUE'S IN BTM ½ OUTER
⑥ REFITTED INNER CYL AND 'B' GLAND.
⑦ CFS MANUF. 2 OFF AXIAL KEY'S (TEMP'S) AND FITTED TO PLACE. (1" THICK)
⑧ TOP ½ OUTER CYL TONGUE'S CLEANED.

IP7007069

FRONT TOP GIBB KEY'S SLACK ½ JOINT
LHS .741" RHS .762"
FRONT TOP GIBB KEY'S TIGHT ½ JOINT
LHS .739" RHS RHS .765"

REAR KEY GAP'S

SLACK		TIGHT	
LHS	RHS	LHS	RHS
.964"	1.017"	.969"	1.014"

Recorded inner steps → rads after key / packer adjusts.
Fitted 'blanks' to inlet belt, guide pins → removed lift lugs.
Laser shoot "tops off".
Fitted top ½ inner → removed guide pins
Laser shoot in prog..
Commenced drilling / c/boring elevation packers (now).

SUGGESTED HP N/S WORK 11th/12th MARCH 02.

① COMPLETE LASER SHOOT "TOP ½ INNER".
② FIT OUTER C/L → MEASURE TOP F → R KEYS WHILST 'SLACK'.
③ TIGHTEN ½ J/T.

④ REMEASURE TOP F → R KEYS 'TIGHT'.
⑤ LASER SHOOT – "TOPS ON TIGHT ON RUNNING KEYS".
MISC: - CFS M/C 2 off BOTT. LH → RHS INLET SLEEVES AS PER ENCLOSED INSTR.. 2 off GUIDE RINGS TO SUIT. (STAMP OR ETCH PARTS FOR POSITION ALSO MARK 'THICK' END).
UNBOX / PLAY WITH BOLT MEASURING GEAR.

NIGHT SHIFT 11th/12th MARCH 2001 MLS

① LASER SHOOT OF TOP ½ INNER COMPLETED.
② FITTED OUTER CYL TO PLACE + MEASURE TOP FRONT + REAR KEY'S SLACK. (TIGHTEN ½ JOINT).
③ CFS CONTINUE TO M/C INLET SLEEVES AND GUIDE'S
④ CHECKED BOLT MEASURING GEAR EVERYTHING THERE THAT IS REQUIRED
⑤ RECHECKED MEASUREMENT'S FOR TOP ½ FRONT AND REAR KEY'S

IP7007070

REAR TOP & KEY (INNER/OUTER)	.964"	1.010"

Checked 'D' gland for ax. mismatch — none, recorded bones (potted).
Checked rear key packer sizes (see off)
Laser shot, tops on, temp packers. fitted 'running' packers ~~transferred weight~~ / removed temps.
Laser align — running packers — complete.
M/ing guide rings for bott ½ inlets —

SUGGESTED HP N/S WORK 12th/13th MARCH 02.

1. FIT TEMP. PACKERS & SLACKEN HYDR. BOLTS.
2. RECORD 'UNBOLTED' ½ J/T GAPS & 'D' GLAND GAPS AS PER C/SHEETS
3. REMOVE TOP ½ CYL.
4. REMOVE BOTT ½ 'B' GLAND, BOLT TOP TO BOTT. IN PREP. FOR TRANSPORT AM.
5. REMOVE TOP ½ INNER.

MISC:- CFS TO M/C TOP INLET SLEEVES AS PER INSTR.
FIT PISTON RINGS TO TOP INLETS AS " DRG.

NIGHT SHIFT 12TH/13TH MARCH 02 MLS

1. TRANSFERRED CYL TO TEMP PACKER'S AND SLACKENED BOLT'S
2. RECORDED UNBOLTED GAP'S OUTER ½ JOINT AND 'D' GLA
3. REMOVED TOP ½ OUTER CYL.
4. REMOVED TOP ½ INNER CYL.
5. FITTED PISTON RING'S TO TOP ½ INNER INLET'S AS PER DRAWING.
6. CFS CONTINUE TO M/C TOP INLET SLEEVE'S AS PER INSTRUCTION
7. REMOVED BTM ½ 'D' GLAND AND FITTED TOP ½ AND BTM ½ TOGETHER, READY FOR TRANSPORT A.M. (WITH NEW COMPONENT'S

IP7007071

		LHS	RHS.
INNER STEPS: ·	FRONT -	-044.	-040.
	REAR -	-030	-031.

WED. 13TH MARCH 02. DI, DKL.

Refitted lifting lugs to bott½ inner cyl, lifted out cyl → fitted shims to elevation packers (F×015", R×008"), refitted cyl → recorded steps (see opp)
Measured inner cyl rod bolt lengths - cold.
Laser shoot - inner cyl after elevation, F → R.
Fitted Nos 1 → 2 bott½ brgs in readiness for rotor (awaiting crows of packing - due to-day?).
M/ced top guide rings - complete.
M/cing bott RHS inlet retain-ring - in prog.

SUGGESTED HP N/S WORK 13th/14th MARCH 02.

1. REMOVE BOTT½ CYL TO SUPPORT FRAME.
2. MEASURE/MAP OUT ELEVATION PACKER/SHIM/& KEY THICKNESS → LOCATION, F → R KEYWAYS, I.D. LOOSE PARTS
3. COMMENCE DRILL/TAP ELEV. PACKER BOLT HOLES.
4. FIT BOTT. INLET PISTON RINGS AS PER DRG.
5. FIT TOP½ F → R BOLT ON GLANDS, RECORD BORES/GAPS TIGHT, GAPS SLACK → REMOVE.
6. BOTT.½ RHS INLET: - CLEAN, FIT SLEEVE/PEG (THICK WALL TO REAR) ASSY, RECORD CLNCS AS PER C/SHEET AFTER DOWELLING.
7. ROD BOLTS (INNER): - FAMILIARISE A MECHANIC WITH GEAR → CONFIRM D/S. FLGS..

MISC: - M/C TOP FRONT GIB KEYS AS PER SKETCH → STAMP.

IP7007072

* RE-BUILD N°1 BEARING *
RAISING B.T.M PAD +.005" (M.D.A.).

ELEVATION PACKER'S

LHR = .699" RHR = .629"

LHF = .630" RHF = .634"

℄ REAR KEY = 3.499"
℄ REAR KEYWAY = 3.503"

℄ FRONT KEY = 5.749"
℄ FRONT KEYWAY = 5.753"

NIGHT SHIFT 15/7/14 THROUGH 2006 T.L.J.

1. REMOVED B.T.M 1/2 INNER CYL TO SUPPORT FRAME
2. FITTED BTM 1/2 PISTON RING'S AS PER DRAWING
3. MEASURED / MAPPED OUT ELEVATION PACKER'S / SHIM & KEY THICKNESS LOCATION, F+R KEYWAY'S I.D. LOOSE PART'S, STORED ON RACK.
4. FITTED TOP 1/2 F-R-BOLT ON GLAND'S AND RECORDED BORE'S, GAP'S TIGHT AND SLACK AND REMOVED.
5. FAMILIARISED MECHANIC WITH BOLT MEASURING GEAR AND RECORDED COLD LENGTH OF BOLT'S.
6. C.F.S. MACHINED ANTI-ROTATION SLOT'S IN 4 INLET LINER'S AND DRILLED LIFTING HOLE'S IN THE BOTTOM LINER'S.
7. C.F.S DRILLED AND TAPPED 8 off HOLES FOR ELEVATION PACKER'S.
8. C.F.S MACHINED 4 off RETAINING RING'S.

IP7007073

HP ROTOR SPIGGOT FIT = 6.999½"
MAIN OIL PUMP SPIGGOT = 6.999

FRONT ℄ KEY BLOCK BTM½ = 5.749"

REAR ℄ KEYWAY B.T.M½ = 3.503"

Verified packer sizes → vert/horiz moves to correct.
Remeasured "odd ball" rod bolt cold measurements
Removed/sized F&R ℄ packers/shims.
Fitted elevation packers → stamped prior to m/eng.
m/ced 4off → fitted to place.
Measured s/edge to bott of ℄ k/way (HP & bott½)
fitted/measured rings/sleeves in bott RHS inlet,
dowelling in prog.

SUGGESTED HP N/S WORK 14th/15th MARCH 02

1. M/C BOTTOM FRONT ℄ PACKERS → FIT, MEASURE KEYBLOCK.
2. M/C " REAR " " " " " KEYWAY.
3. M/C TOP " " " " " " " .
4. FIT BOTT. LHS INLET ASSY, RECORD CLNCS → DOWEL.
5. RECORD FIGS C/SHEET 6.27 (PISTON RINGS).
6. " " " 6.30 (KEYS).
7. BOLT MEASURING GEAR: - CHECK NO 25.
8. M/C (DRILL → TAP) 1off CRUSH PEG FOR FUTURE SETTING GAUGE

NIGHTSHIFT 14th/15th MARCH 2001.

1. ALL BOLT'S MEASURED AND DOUBLE CHECKED
2. FITTED B.T.M LHS INLET ASSY, RECORDED CLEARANCE'S AND DOWELLED
3. M/CD BTM FRONT ℄ PACKER'S + FITTED + MEASURED KE/BLOCK
4. M/CD BTM REAR ℄ PACKER'S + FITTED + MEASURED KE/WAY
5. DRILLED AND TAPPED 1off CRUSHING PEG FOR FUTURE SETTING GAUGE
6. REMOVED SHELL FROM LHS REAR HOLDING DOWN BOLT AND TAP

IP7007074

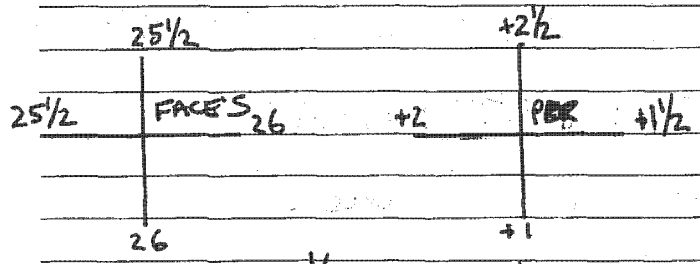

JOURNAL'S = 2½ x ·0001"
COUPLING'S = 24 x ·0001"

DIS 15th MARCH 02. DI, ORL.

Rechecked bolt measure additions & agreed 1 set of figs.
M/cred top near ℄ key packers & fitted/measured.
Measured top & bott outer cyl "axial tongue" as requested.
" " " piston ring clearances " ".
" N1 (B & Cond) bones & ½ j/t gaps.
IP coupling rim/face m/cing accepted ∴ moved HP rotor to match IP axially & adjusted horiz align - OK.
CFS:- M/cing heater line sleeves in prog.
" hold downs " "
Erected scaffold for loop pipe face checks.

SUGGESTED W/S WORK 15th/16th MARCH 02.

Achieve alignment between HP & IP rotors, utilising 4 off slave bolts achieve acceptable concentricity, journal/journal - cone/cone & record.
CFS:- Assist with rotors/concentricity.
Continue heater connection sleeve manuf..
" front hold down bolt drill/tap.

NIGHT SHIFT 15th/16th MARCH 02 MLS

① C.F.S DRILLED AND TAPPED FRONT LHS + RHS HOLDING DOWN BOLT HOLE'S.
② CONTINUE TO M/C HEATER CONNECTION SLEEVE (HAD TO STOP HIM TO M/C COUPLING BOLT'S.)
③ SET ALIGNMENT BETWEEN HP - IP ROTOR'S MACHINED COUPLING BOLT'S IN STAGE'S TO GET A GOOD FIT AS COUPLING'S HOLES ARE NOT TRUE. SET CONCENTRICITY ON FOUR SLAVE BOLT'S.
(DAY SHIFT TO CHECK) SEE CHECK SHEET'S

IP7007075

Measured from HP bott 1/2 joint to underside of cyl relative to heater connection flange.
Achieved HP-IP concentr., 4 shims + 12 hydr bolts tight setting up for line boring.
Completed m/ering of heater con. rings + fitted (c/sheet sup m/ering pipe length in prog.
Prep loop pipe flanges for sand blast / blue check.

SUPERVISED N/S HP WORK 16th/17th MARCH 02.

1. ASSIST CFS WITH HP-IP COUPLING WHERE/WHEN NECESSARY. (WHEN 4 BOLT/SLEEVE ASSYS COMPLETE – CONCENTR. CHECK, IF OK, REMOVE SHIMS + CONTINUE LINE BORING)
2. CFS CUT SEGMENTAL RING FOR TOP INLETS.
3. PROGRESS FITTING OF TOP INLETS.
4. REFIT PACKING OFF SHIMS INTO BOTT 1/2 INLET GLAND + DIAPHS.

NIGHT SHIFT 16th/17th MARCH 02 MLS

1. REFITTED PACKING TO BTM 1/2 INLET GLAND + DIAPH'S
2. C.F.S CUT SEGMENTAL RING'S FOR TOP INLETS.
3. FITTED TOP RHS INLET SLEEVE + RETAINING SEG'S + GUIDE RING, DOWELLED IN POSITION.
4. FITTED TOP LHS INLET SLEEVE + RETAINING SEG'S + GUIDE RING, COMMENCED DOWELING.
5. C.F.S CONTINUED TO SET UP, AND STARTED LINE BORING HP – IP COUPLING.

IP7007076

Recorded seal ring & carrier clearances @ leak off & leaker connections.
Recorded circumf. gap on inlet piston rings top, both, LHS & RHS.
Fitted stellite pipe to heater flange & recorded final clrnces., assy fitted to underside of cyl.., high torque in prog.
Continuing boring / honing HP-IP coupling.
Removed scaffold from HP loop flanges & cleaned out cyl..
Drilled / tapped top inlet t/cis..

SUGGESTED N/S HP WORK 17th/18th MARCH 02.

1. ASSIST CFS WITH HP-IP COUPLING. WHEN LOFF SLEEVES / BOLTS FITTED, CONCENTR. CHECK, CONTINUE BORING (CLOCKS IN OFFICE)
2. BOTTOM 1/2 INNER:- PREPARE INNER & OUTER CYLS AS PER LIST & FIT INNER TO PLACE ON TEMP AXIAL KEYS.

MISC:- REMOVE LIFTING LUGS FROM BOTT. INNER 1/2 J/T.
REFIT STUDS TO 1/2 JOINT.
SET STUD HEIGHTS WITH SLOTS F TO REAR AS PER DRG.
FIT HOLD DOWN BOLTS TO BOTT 1/2 CYL & PULL DOWN BY HAND.

NIGHTSHIFT 17TH / 18TH MARCH 2002 MLS

1. PREPARED INNER / OUTER CYL'S AS PER LIST.
2. FITTED BTM 1/2 INNER CYL TO PLACE AND REMOVED LIFTING LUG'S AND REFITTED STUD'S TO 1/2 JOINT. SET STUD HEIGHT'S WITH SLOT'S FACING FRONT TO REAR.
3. FITTED 4 OFF SLEEVES + BOLT'S, REMOVED SLAVE'S AND RECHECKED CONCENTRICITY / & CONTINUED BORING.

IP7007077

INNER CYL INCLINATIONS: -

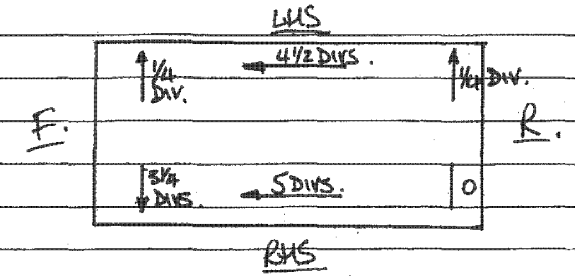

BAFFLE RADS: - LHS 124"/333" RHS 125"/346".

INITIAL CLOFF BOLTS EXP/STRETCHED IN HP-IP COUP. = 9, 5, 12 & 12.

PALM CRUSH PEG CLEARANCES

	FRONT PEG	REAR PEG
LHSF PALM	007"	006"
RHSF PALM	007"	006".

fitted hold down bolts & washers to inner cyl (slack).
Measured "Leader cm pipe (old)" dias. as requested.
Recorded inner inclinations (see opp) & feeler checked packs
" " steps & clearances.
Retorque tightened leader cm flange & checked zero gap
Measured rotor cooling pipe dims, m/cing in prog — done
cleaned fasteners, flange.
Measured N1 gland fits as requested.
Recorded baffle rads (see opp)
fitted 8 rows of segs to both ½ cyl (A, D & E glands)
Sized palms for crush pegs & m/ced / fitted front CLoff.
HP-IP coupling complete, remove CLoff bolts.

SUGGESTED N/S HP WORK 18th/19th MARCH 02.

1. FIT LEAK OFF PIPE TO UNDERSIDE OF OUTER CYL (CENTRE RINGS/CARRIERS IN INNER PRIOR)
2. CFS DRILL OUT BROKEN STUDS, UNDERSIDE OF HP CYL
3. ENSURE 1 & 2 BRGS IN POSITION.
4. 'B' GLAND LEAVING SLC MIDNIGHT. WHEN AVAILABLE, RECORD SEE SLOTS TO PRESSURE FACE AS PER SKETCH
5. FIT N1 TO POSITION.
6. FIT ROTOR TO BRGS ON L'SHAPE AXIAL SETTING GAUGE

IP7007078

AWAITED 'B' GLAND (N1) ALL N/S. PROMISED EX SLC 24/03/02

NIGHT SHIFT 18TH-19TH MARCH 2002 MLS

20

1. FITTED LEAK OFF PIPE TO UNDERSIDE OF OUTER CYL TORQUE TIGHTENED TO 370 FT. LB. IN SEQUENCE
2. C.F.S DRILLED OUT BROKEN STUD'S UNDER HP CYL
3. C.F.S MACHINED SLEEVE'S FOR HP-IP COUPLING
4. FITTED THERMO-COUPLE'S TO N1 + N2 BEARINGS AND SET TO PLACE.
5. 'B' GLAND STILL ON M/C IN SALTLAKE CITY.

D/S 19th MARCH 02. B1, DR1

No 'B' gland ∴ installed rotor – no men until P.M. for rotor rads/axs.
'B' gland on site @ 1PM.
Recorded axs @ A, D + E plus rotor datum (rotors centred)
Recording front (No 1) o/w bore, it's dropped out mic into pipe under 'B' gland — stopped play.
Fitted near crush pegs – require adjusts..
CFS m/ering / fitting phase angle key.
Measured rear end / castellations of old & new rotors.
Welding BDE heater cen" in prog. -

IP7007079

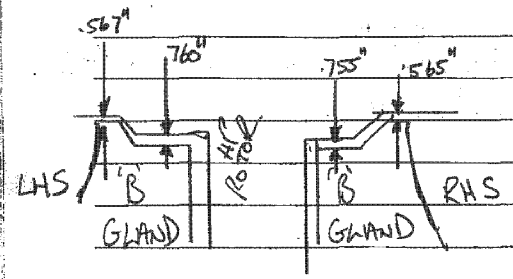

SUGGESTED N/S HT WORK 19TH/20TH MARCH 02.

CHANGE THE FOLLOWING ORDER IF NECESSARY ACCORDING TO CRANE AVAILABILITY.

1. RECORD RADS ON GLANDS A, D & E (WEDGE WELL BELOW ½)
2. 'B' GLAND MEASUREMENTS AS PER LAST NIGHT.
3. INNER TO ROTOR TDC BRIDGE GAUGES (C/S 6.5).
4. UNBOXED RADS ON TEMP PACKERS (" " 6.21).
5. REMOVE ROTOR, FIT BOTT ½ 'B' GLAND, REFIT ROTOR.
6. 'B' GLAND RADS (WEDGE), AXIALS & ROTOR DATUM.
7. " " TOP LEAD F & R ROWS TDC ONLY.

MISC:- ADJUST REAR CRUSH PEG TO -006" BELOW OUTER.

NIGHTSHIFT 19TH/20TH MARCH 02 MLS

1. REMOVED HP ROTOR AND SET 'B' GLAND TO PLACE. RESET HP ROTOR TO PLACE.
2. RE-CENTRE TN1 + TN2 BEARING'S
3. RECORDED 'B' GLAND MEASUREMENT'S
4. RECORDED ½ JOINT INNER CYL TO SHAFT BRIDGES AND RADIAL'S UNBOXED ON TEMP KEY'S.
5. RECORDED AXIAL'S AND RADIAL'S ON GLAND'S A, B, D, AND E
6. RECORDED HP ROTOR DATUM.
7. RECORDED 'B' GLAND TOP LEAD F+R ROW'S ONLY.
8. ADJUSTED REAR CRUSHING PEG'S
9. RECORDED AXAIL CLEARANCE N1 ('B' GLAND) TO ROTOR
10. HP CYL INSPECTION BEFORE ROTOR WENT IN FINAL.

IP7007080

No2 BRG / HP COUP DATUM (AFTER JACKING) = 5.693"

REAR INNER / ROTOR BRIDGE ON 15.000" BLOCKS = 074".
BOTH AX KEY SIZES = FRONT LH & RHS = 0.956"
" " " " REAR LH 1.016, RH = 1.019".

Measured top ½ 'B' gland retain. key pockets as requested.
* Ax. figs require rotor & inner cyl to go to near x 029",
∴ sized / milled & fitted front ax 'L' shapes, jacked cyl to near onto keys, re positioned rotor on setting key,

Recorded rotor / brg ax datum @ No2. (see opp).
" baffle axials.
Rechecked F & R, bottom gland rads as requested.
" inner / rotor near bridge " "
T.V. insp, thro interstages.
Align check LP-IP, IP-HP conducted / recorded.
Tightened inner cyl, 4 off holding down bolts.
Staked dowels in 4 off top near ℄ key packers.

SUGGESTED N/S HP WORK 20th / 21st MARCH 02.

1. UNBOLTED BUMP, RECORD FOUL POINTS & DATUMS.
2. RECORD GLAND BOX STEPS c/SHEET 6.19.
3. " " 'B' CLEARANCES " 6.16.
4. " " C, D & E " " 6.17.
5. " INNER CYL / ROTOR AXIALS. " 6.2.
6. " ST 8 SEG / ROTOR RADS. " 5.10.
7. " INLET GLAND, LAST ROW C7 RADS " 5.17.
8. REMOVE ROTOR SETTING GAUGE, CLEAN ½ J/T & PROG FITTING TOP ½ DIAPHS, INLET GLAND, DEFLECTOR (STAKE DOWEL
9. RECORD ST8 SPILL / SHROUD LHS, RHS & TDC c/SHEET 5.9
CFS. M/C TOP 4 OFF AXIAL KEYS TO BAZ'S FIGS ENCLOSED, HARD STAMP TO POSITION, DRILL FOR BOLTS & FIT. ENSURE DESIGN CLNC. BETWEEN TOP & BOTT (SKETCH ENCLOSED)

IP7007081

HP DATUM = 5·693"

ROTOR HARD TO FRONT = 5·537
" " " REAR = 5·829
TOTAL FLOAT = ·292"

HARD TO FRONT 'E' GLAND ROW 2 (OUTER ROW)
" " REAR 'D' GLAND " 4

Hi-torque "aleminin heel" dropped in HP & retrieved.

TOP TO BOTT AXIAL KEY CLEARANCES 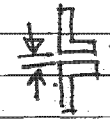 DES 004/027.
RHF .015" RHR .019"
LHF .008" LHR 012".

ROTOR BUMP:- DIAPHS, A & B GLANDS TIGHT.
RE 5·528"
RC 5·846" = 0·318".

① RECORDED ALL DATUM'S AND DATA AS PER CHECK SHEET'S 6·19, 6·16, 6·17, 6·2, 5,10, 5·17
② RECORDED UNBOXED BUMP, FOUL POINT'S
③ REMOVED ROTOR SETTING BLOCK AND CLEANED ½ JOINT FOR DIAPH – INLET GLAND FIT'S.
④ INLET GLAND SET TO PLACE AND TORQUE TIGHTENED
⑤ STG1 DIAPH SET TO PLACE AND TORQUE TIGHTENED
⑥ 'B' GLAND SET TO PLACE AND TIGHTENED.
⑦ CFS M/CD TOP ½ AXIAL KEY'S STILL TO BE DRILLED
⑧ STG 2, 3, 4, 5, 6, 7 DIAPH SET TO PLACE
* NEED TO BE TORQUE TIGHTENED *

DS 21st MARCH 02. B1 DRL.

Jacked cyl (inner) forward, removed shims/keys, m/cced keys to retain bolts & height.
Recorded inner/outer cyl rad/ax datums.
" " " " ax key clearances
" Stg 8 TDC clnce. after fitting/tightening.
Torque tightened Stgs 2 & 3 × 583 lb/ft, 4–8 inc × 313 lb/ft.
Completed m/cing of top axial keys & fitted.
Recorded bump – all diaphs/glands torqued (ie inner)
Rechecked HP inner near axial datum as requested.

* Unable to torque 'N1' (B) gland, equipment being used on IP – not available @ 5·30 *.

DONE

* Piece of wood down RHS inlet, IPS to suck out thro' VVIS *.

IP7007082

INLET GLAND LAST RING (LAST FIN)

TOP ½ OFF = ·024"
TOP ½ ON SLACK = ·022"

DEFERRED HP N/S WORK 21st/22nd MARCH 02.

① INNER TOP ½: - Ensure cleanliness of fits & joints, lubricate same (boiled oil on ½ j/t), rig top to suit both inclination & fit to place.

② INNER: - FIT NUTS MAINTAINING STUD POSITIONS (SLOTS STRAIGHT), CHECK NUT O.D. DOES NOT FOUL RADII IN C/BORES (CHAMFER IF NECESSARY).
BUMP UP TIGHT & MARK OFF ANGLES, SIGN OFF WHERE NECESSARY "BOX UP C/SHEET" 6.42.
MISS: - BOTT ½ INNER HOLD DOWNS: - FIT & SET BLOCKS MID RANGE.
TOP ½ OUTER GIB KEYS: - ASSESS CLEARANCE BETWEEN UNDERSIDE OF FLANGE & TOP OF KEYS (M/C IF NECESSARY).

NIGHT SHIFT 21ST/22ND MARCH 2002 MLS

① CLEANED TOP AND BTM ½ JOINT'S ON INNER C/L, LUBRICATED ½ WITH BOILED OIL AND FITTED TOP ½ TO PLACE
② FITTED NUT'S TO PLACE MAINTAINING SLOT'S FACING FRONT TO REAR. MARKED OFF ANGLE'S ON NUT'S
③ FITTED HOLDING DOWN BOLT'S ANTI LIFTING BLOCK'S AND SET MID RANGE.
④ ASSESSED CLEARANCE'S ON TOP ½ OUTER GIB KEY'S AND M/C D KEY'S TO SUIT.
⑤ COMMENCED BOLT HEATING HP INNER.

IPS TV inspection thro v/v's retrieved wood (dropped in RHS inlet D/S) plus sand & debris.

IP7007083

INLET GLAND LAST FIN = .024".

HOLDING DOWN BLOCK'S

LHR .078" RHR .068"

LHF .082" RHF .086"

DIS. 22ND MARCH 02. DRL, B1. 01

Completed bolt heat of cyl, cooling in prog..
Recorded inlet gland last fin (see opp)
Cleaned "boiled oil" off diffuser as requested.
Commenced recording bolt stretch on "cold bolts".

SUGGESTED N/S HP WORK 22nd/23rd MARCH 02.

1. OBTAIN FULL SET of 'COLD' BOLT STRETCH FIGS & ADJUST WHERE NECESSARY. RECHECK WHEN COLD.
2. CHECK & TAB HOLD DOWN BLOCKS - RECORD IN LOG.
3. LIFT CYL TOP 1/2 & CLEAN 1/2 J/T & FITS.

MISC: - TIME PERMITTING RE NOS 1-3 INCL :-
LUBRICATE FITS & BOILED OIL ON 1/2 J/T.
REMOVE INLET COVER'S/BLANKS.
CENTRE PISTON RINGS.
COMPLETE SIGN OFF SHEET WHERE NECESSARY.
FIT CYL.

NIGHT SHIFT 22ND/23RD MARCH 02 MLS

1. RECORDED FULL SET OF COLD BOLT STRETCH FIG'S AND ADJUSTED WHERE NESESSARY.
2. RECHECKED FIG'S WHEN COLD. ALL ✓
3. RECORDED GAP'S ON HOLD DOWN BOLT'S AND TABBED (BLOCK'S)
4. CLEANED FIT'S ON HP OUTER CYL AND RE-CLEAN BOLT'S
5. INSPECTION OF INNER CYL BEFORE TOP 1/2 FITTED
6. FITTED TOP 1/2 OUTER CYLINDER TO PLACE.

IP7007084

HP BUMP (OUTER CYL ON-SLACK) RE 5.527"
RC 5.839½
TOTAL FLOAT 0 312½"

TOP GIBB KEY'S

LHS	RHS
·747"	·758"

D/S 23RD MARCH 02. DRL, B1.

Moved IP rotor to rear & performed bump check (see off.).
Manuf/fitted covers to top bolt & glands.
Removed/sized emerg. packers, manuf spares in prog..
Squared gib key & match marked.
HP-IP alignment check accepted.
Removed packing from F&R bolt on glands for datums
fitted nuts to outer cyl rod bolts, measured & stretched

SUGGESTED HP N/S WORK 23RD/24th MARCH 02.

① CONFIRM WITH MD & A THAT IP ON THRUST (HARD TO FRONT).
RECORD IP & HP TO RED DATUMS, HP TO NO2 BRG & LH/RHS
COUPLING GAPS (AS PER SHEET).
② FIT BLANKS (3 off) UNDER CYL. (BOLTS & METAFLEX ON SHELF)
MISC: - IF CYL COOLS OFF: -
MEASURE BOLT ON GLAND LH, RH & BDC. F+REAR.
" CYL BORE TO ROTOR LH, RH & TDC. F+REAR.
" TOP FRONT. GIB KEY SLOTS LH & RHS.
REMOVE TEMP O/W BOLTS FROM NO1 O/W - NO LONGER REQUIRED.

NIGHTSHIFT 23RD/24th MARCH 02 MLS

① REMOVED TEMP O/WIPER BOLT'S FROM No1 O/W
② RECORDED TOP½ OUTER GIBB KEY SLOT SIZE'S
③ FITTED BLANK'S (3 OFF) UNDER HP OUTER CYL
AND TORQUE TIGHTENED (M.D.A RECOMMENDED
200 FT/lbs.)
④ MEASURED BOLT ON GLAND'S AND CYL BORE TO ROTOR
SEE CHECK SHEET.
⑤ FITTED BLANK TO TOP½ CYL, TORQUE TIGHTENED 160 lbs ft.

IP7007085

HP DATUM (AFTER CALCS) = 5.762"

Jacked up cyl → transferred weight to permanent packers, removed temp packers. Adjusts made to rod bolts – cooling off.
MD → A gave IP rotor on thrust ∴ recorded HP → IP ax datums to ped, HP to No2 brg → coupling gaps LH → RHS.
* Advised that cyl requ. move of 0.069" to rear. *
M/ced → fitted top front gib keys → fastened.
Monit. emergency packers in prog (o/size – requ. final height)

SUGGESTED HP N/S WORK 24TH/25TH MARCH 02.

① REAR PUSH/PULLS: - REMOVE, I.D. → SIZE REAR KEYS, LEAVE ON DESK.
② FIT → FINALISE GIB KEY/FRONT TOP FLANGE (M/FLEX ON SHELF).
③ HP CYL: - WHEN COLD RECORD RADIALS @ BOLTON GLAND, → CYL BORES AS PER LAST NIGHT.

NIGHTSHIFT 24TH/25TH MARCH 02 MLS

① REMOVED REAR PUSH/PULL KEY'S I.D. AND SIZED, READY FOR AM M/CING.
② TAPPED ALL HOLE'S FOR TOP GIB KEY/FRONT COVER, FITTED TO PLACE AND TIGHTENED.
③ RECORDED HP CYL RADIAL'S @ BOLTON GLAND'S AND CYL BORES.

IP7007086

M/C REAR PALM, REAR KEYS TO: - LHSR - 0.704"
RHSR - 0.691".

DIS. 27th MARCH 02. CKL. 51. 34

Rechecked bolt on gland/rotor rads as requested, instruction re height: - Front - OK, Rear down x 0'10". Removed, machined → reinstated packers, rechecked datums: - OK.
Checked concentr. with orig 4 bolts/sleeves expanded → stretched. Remainder of bolt assys fitted exp/stretched. No 6 hole, HP side - one score in hole, not stepped - OK.
M/cyd rear thrust packers @ LH & RHS rear palms → refitted, jacked cyl to rear.
Measured rear palm front keys → gaps plus rear key clearances.
Submitted HP outer cyl "sign off" sheet.
Bolt heating rod bolts complete.
Drilling/c'boring HP front end of shaft as per instr.
Measured "emerg. packer" clearances for m/cing.

SUGGESTED HP M/S WORK 25th/26th MARCH 02

1. HP ROTOR: - ASSIST CES WITH ROTOR TURNING ETC..
2. RECORD HP ROTOR AXIAL DATUM (NOZBRG) → AXIAL FIGS. ON C/SHEETS 6.16, 6.17.
3. FINAL RUN OUT HP-IP CONCENTR..
4. FIT PACKING TO BOLT ON GLANDS → RECORD ROTOR DATUMS, RE'S, RC'S → RADS AS PER SKETCH.
5. RECORD C/L / ROTOR BORES AS PER 6.23

MISC: - RECHECK KEYWAYS (REAR PALMS, FRONT K/WAYS) → M/C / FIT NEW KEYS TO SUIT - SEE SEPERATE NOTE.
TAB WASHERS ON PERMANENT → TEMP. PACKERS
TIGHTEN C/L HOLD DOWN BOLTS 50 ft/lbs.

IP7007087

REAR PUSH/PULL KEY'S - FRONT KEY'S

FINISHED SIZE'S	LHS	RHS
	1.039"	1.048"

NIGHTSHIFT 20/2/20 MARCH 02.

1. C.F.S COMPLETED DRILLING AND TAPPING HP ROTOR.
2. RECORDED HP ROTOR AXIAL DATUM @ (No2 BRG) AND AXIAL FIG'S C/SHEETS 6.16, 6.17.
3. FITTED PACKING TO BOLT ON GLANDS AND RECORDED ROTOR DATUM'S, RG'S RC'S, AND RAD'S AS PER SKETCH
4. RECORDED CYL TO ROTOR BORES AS PER C/SHEET 6.23,
5. RE CHECKED KEY WAY'S (REAR PALM'S, FRONT KEYWAY'S)
6. MACHINED KEY'S FITTED TO PLACE AND REMOVED JACKING BRACKET'S AND JACK'S
7. TABBED PERMANENT + TEMP KEY'S (I.E. PUSH/PULL RUNNING KEY'S)
8. RAN OUT CONCENTRICITY CHECK SEE CHECK SHEET'S

IP7007088

MICK
[illegible]
USA T/SHEETS
HOMERS MCDONALD

* CHECKED BOX 'A' *
EVERYTHING THERE.

Torqued down outer cyl hold. downs 50 lbs/ft.
Recorded HP-IP concentr. – OK.
" HP-control rotor runout – OK, tabbed bolts
Attempted to jack rotor train on thrust, achieved 010 to near (ie 010" off datum). Recorded control rotor ccw. datums relative to HPR datum.
Rechecked 'C' & 'D' datums (rotor bal. plane to gland) as requested
M/eng emerg. packers LHS F & R complete.

SUGGESTED HP N/S WORK 26th/27th MARCH 02.

1. FIT FRONT & REAR TOP 1/2 BOLT ON GLANDS & TIGHTEN.
2. FIT/SIZE RHS EMERGENCY PACKERS & TAB.
3. COMPLETE C/SHEET 6.34 RE PALM CLEARANCES, CHECK ALL TAB WASHERS ARE COMPLETE & LOCKING DEVICES IN PLACE.

NIGHTSHIFT 26TH/27TH MARCH 02 MLS

1. FITTED SIZED RHS EMERGENCY PACKER AND TABBED OFF.
2. COMPLETED C/SHEET 6.34 RE PALM CLEARANCES AND CHECKED ALL TAB WASHER'S LOCKED OFF.
3. FITTED FRONT + REAR TOP 1/2 BOLT ON GLAND'S AND TIGHTENED.

IP7007089

WEDNESDAY 27TH MARCH B.I

Scaffolding for x-over pipes & inlets
Finishing M.O.P.

THURSDAY 28TH MARCH B.I

X-over filled & inlets bolted
HP. DE Setting. Front Ped. closed up
Lagging

FRIDAY 29TH MARCH. B.I

ETG on 0500 hrs.
Finishing off insulation 1000 HP DE ·636
Equipment handover. 2000 " ·511
Commenced warming thro' 2100 hrs

SATURDAY 30TH MARCH. B.I
1000 HRS MIKE KNIBB
BRIAN WHINRAY

0846 IP INLET 451°F HP Inlet Metal 305°F
0934 HP Upper 297°F HP Lower 282°F
0946 HP DE ·633
1300 HP DE ·600 HP Upper 281.5 Lower 232.1
Note @ approx 1000 hrs RH CRH pipe banging violently. Operators opened low point drain bypass.
Max T & B HP shell was 64°F @ 1128 hrs.
1320 Upper 280 Lower 256
1300 HP. Diff ·460 (+170)
2105 HP Top 405°F Bot 397°F
HP DE ~~·493~~ ·491 (+137) Inlet metal 361°F
Main Steam 619°F 619 psig
CRH 491 HRH 306

IP7007090

SATURDAY 30 MARCH (cont'd)

2143 S.T.S

2155 1000 RPM - holding for lube oil to reach 100°F

2208 Raising to 3,000

#3 Bearing peaked at 4.7 mils at 1900 RPM

2218 3,000 RPM

2230 B-N Vibs (shaft relative)

Brg	#1	#2	#3	#4	#5	#6	#7	#8	[illegible]
A	2.12	2.59	5.35	0.93	1.25	2.38	2.13	1.67	3
B	1.51	2.02	3.98	2.41	2.97	1.36	0.72	0.41	1.

2255 HP DE .548 (+82) HP Top 368°F Bot 387°F

2313 Raising to 3,600. @ 3349 RPM #3 Brg 7 mils and tripped machine

2340 Speed caught and holding @ 3000 for data for balance shot on IP.

P1 Vibs (shaft relative)

#1 Brg 1.9 #2 Brg 3.3 #3 Brg 4.3 #4 Brg 1.6

Main steam 690°F 723 psig

2400 Shutting down for balance shot

SUNDAY 31 MARCH

0200 Balance weight completed but Ops want 4 hrs on ETG before rolling.

0700 (~~Sunday~~) Problems with leaking dump valve on first standard. Run up delayed

HP DE .498 (+132) HP Top 370F HP Bot 382F

IP7007091

SUNDAY 31st MARCH (CONTD) B.I M.K B.W

1204 S.T.S Main Steam 816 PSIG 624°F
1213 1000 RPM. Holding for lube oil temp for vibration gauges
1231 Raising to 3,000 RPM
1239 1900 RPM 3.9 mils on Brg 3
1250 3,000 RPM. 15 MIN hold for vibration gauges
P1 Vibs #1 1.3 mils #2 2.5 mils #3 4.1 mils #4 0.41
1305 Raising to 3,600 RPM
1312 3,600 RPM #1 3.02 #2 3.95 #3 3.57
1340 Synchronised 20 MW
1355 P1 Vibs #1 2.78 #2 3.96 #3 3.94 #4 2.85
HP Top/Bott 340/349°F
HP DE .540 (+90 mils) HP Inlet Metal 531°F

1445 Vibs #1 3.0 #2 4.7 #3 4.3 #4 2.0
Main Steam 706 °F 767 psig
HP Top/bot 369/320°F
HP DE .476 (+154 mils) HP Inlet Metal 621°F

1500 Vibs #1 3.25 #2 5.01 #3 4.38
1619 " 2.46 3.98 2.14
1710 " 3.2 4.5 2.2 #4 2.9
Load 72 MW Main Steam 851F 737 psig
HP Top/bot 472/489 F
HP DE .348 (+282 mils) HP Metal 769°F

1745 Load 123 MW Main Steam 890°F 936 PSIG.
Vibs #1 3.2 #2 4.5 #3 2.7 #4 2.6
HP DE .331 (+299 mils) HP Metal 796°F

IP7007092

SUNDAY 31ST MARCH (CONT'D) BI

1800 176 MW
Vibs #1 2.92 #2 3.96 #3 2.33 #4 3.22
HP TOP/BOT 505/539
HP DE .322 (+308 mils) HP Metal 814 F

1830 230 MW. Main steam 891°F 1083 psig
Vibs #1 3.8 #2 4.8 #3 3.6 #4 2.8
HP Top/bott ?
HP DE .315 (+315 mils) HP Metal 830°F

2000 LOAD 402 MW.
Vibs #1 4.98 #2 6.17 #3 4.94 #4 2.73
HP Top/bot -57°F
HP D.E .304 (+326 mils) HP Metal 875°F

MONDAY 1ST APRIL B.I MK. B.W.

0700 LOAD 352 MW. Main Steam 980°F 1507 PSIG.
Vibs #1 4.14 #2 6.07 #3 4.45 #4 3.13
HP Top/Bot 634/769°F
HP D.E .467 (+163 mils) HP Metal 934°F
CRH 601 F 220 psig HRH 893°F 203 psig

0900 Meeting with IPSC Management re balancing
IP Rotor in heat soaked condition
1053 Reducing to 50 MW for vibration data
1207 Shutting down.
1420 Balance change on IP completed: (End plane weights removed + mid plane weight fitted.
4 hours on E.T.G now required

IP7007093

MONDAY 1ST APRIL (contd) BI

1832 S.T.S HP DE ·664 (+26 mils)
1940 80 MW HP DE ·664 (-34 mils)
P1 #1-2.9 #2-3.3 #3 2.6 #4 0.7
R/HEAT BOWL 778
1947 100 MW
2035 300 MW. Main Steam 957°F 1767 psig
P1 #1-2.9 #2-4.0 #3 1.6 #4 0.7
R/HEAT BOWL 859
2046 350 MW
2245 RAMPING UNIT DOWN FOR OFF LINE TESTING
2358 Control v/v tightness check 0.4

TUESDAY 2ND APRIL BI MK BW

0014 S.V tightness check 0.4
0041 B/U o/s test 3778
0056 3 OSF o/s tests 4061, 4059, 4058
0108 Test complete – rolling down
0205 ETG.
0700 Balance shot completed
1118 S.T.S
1140 3,600
P1 #1-1.2 #2-2.2 #3-3.2 #4-0.8
1145 Synchronised
1208 78 MW Main Steam 853°F 1334 psig
CRH 407F HRH 789F
HP TOP/BOT 553/640 R/Heat Bowl 732
P1 #1-1.5 #2-2.3 #3-3.2 #4 0.4
1500 800 MW HP DE ·446 (+184)
1520 876 MW HP DE ·445 (+185)

IP7007094

TUESDAY 2ND APRIL (CONT'D)

1700 LOAD 897 MW Main Steam 992/2399 psig
CRH 617/565 psig HRH 1004/527 psig
HP INLET MTL 968F IP Inlet MTL 989F
HP DE .450 (+180)

P1 Vibs
#1 - 0.6 #2 - 2.4 #3 - 1.5 #4 - 2.0

WEDNESDAY 3RD APRIL (~~cont'd~~) BI MK BW

0700 LOAD 898 MW Main Steam 1007°F/2211 psig
CRH 635/553 psi HRH 1003/514 psi
IP Metal Temp 994°F. HP Inlet MT 992°F
HP DE .514 (+116 mils)

P1 Vibs
#1 - 1.1 #2 - 2.5 #3 - 1.8 #4 - 1.6

B-N VIBS	1	2	3	4	5
A	2.48	3.08	2.99	2.40	1.89
B	1.89	1.72	3.59	2.53	0.45

IP7007095

RECORD SHEET **HP20/001** Page No. **6.1**

Title **HP/IP ROTOR BUMPING CLEARANCE & AXIAL COLD DATUMS**

Contract **INTERMOUNTAIN** Unit No. **2** Serial No. **11245**

Site Issue **A** Date **21/3/02** Checked **BI** Check List No. **1132**

Taken by DRL / MS Date 20-23/3/02 Supervisor Date Approved B. Hyde Date 23/3/02

Readings in inches

SHAFT IDENTIFICATION No.:	RF 111853

CYLINDER CONDITION	UNBOXED	BOXED
DATUM WITH ROTOR HARD TO FRONT	5.528	5.527
ROTOR EXPANDING CLEARANCE (DESIGN .175)	.165	.166
DATUM WITH ROTOR HARD TO REAR	5.846	5.840
ROTOR CONTRACTING CLEARANCE (DESIGN .165)	.153	.147
TOTAL FLOAT (DESIGN .340)	.318	.313

Contacting:- To the REAR - 'D' Gland Row 4 **To the FRONT - 'E' Gland Row 2**

EXTERNAL COLD DATUMS

FRONT-END THROWER TO GLAND	L.H.S.	N/A
	R.H.S.	N/A
REAR-END THROWER TO GLAND	L.H.S.	N/A
	R.H.S.	N/A

DISTANCE BETWEEN BACK FACE OF COUPLING AND No. .....2... BEARING HOUSING	**5.693
POSITION AT WHICH READING WAS TAKEN	LHS

** Final datum after moving HP Rotor and Outer Casing to rear to meet IPRotor Coupling = **5.762"**

RECORD SHEET **HP20/026** Page No. **6.2**

Title **HP INNER CYLINDER TO ROTOR AXIAL DATUMS - UNBOXED**

Contract **INTERMOUNTAIN** Unit No. **2** Serial No. **11245**

Site Issue **A** Date **12/02/02** Checked **BI** Check List No. **1132**

Taken by Randy / M.E. Date 21/3/02 Supervisor MLS/DRL Date Approved B. Angle Date 22/3/02

ROTOR TO 'E' GLAND AXIAL DATUM = 5.693" LHS

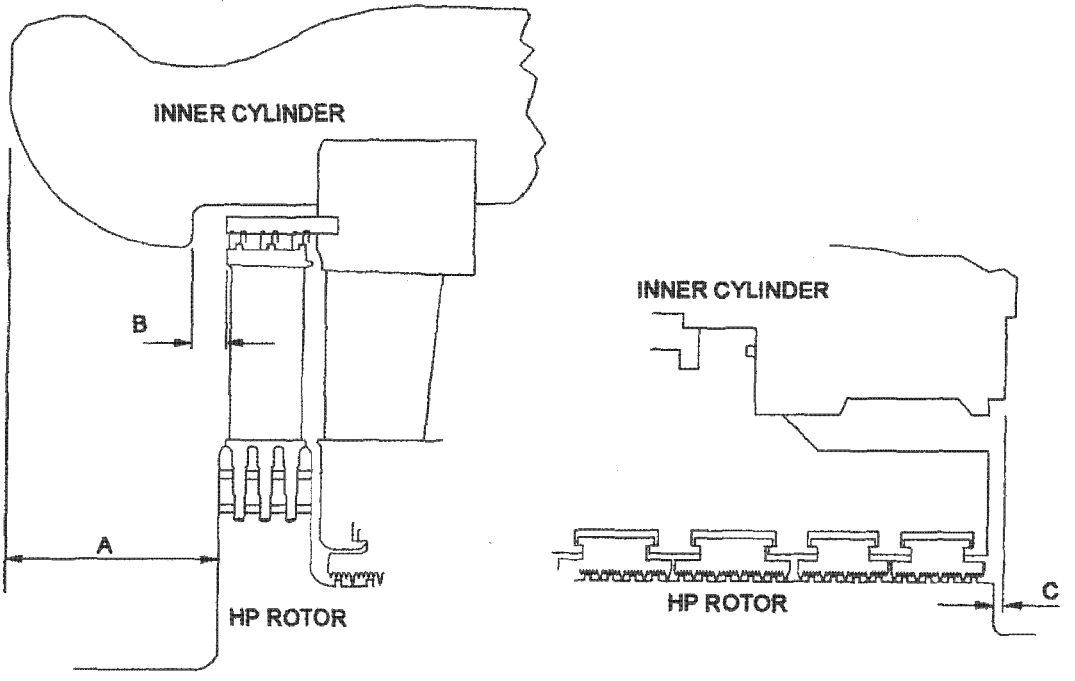

Readings in inches

	FRONT A		FRONT B		REAR C	
	SHOP	SITE	SHOP	SITE	SHOP	SITE
L.H.S.	—	N/R	.504	.504	1.054	1.052
TOP	—	N/R	—	N/R	—	N/R
R.H.S.	—	N/R	.500	.499	1.058	1.056

RECORD SHEET **HP20/027** Page No. **6.3**

Title	**HP INNER & OUTER CYLINDER/ROTOR RADIAL DATUMS - UNBOXED**						
Contract	**INTERMOUNTAIN**			Unit No.	**2**	Serial No.	**11245**
Site Issue	**A**	Date	**12/02/02**	Checked	**BI**	Check List No.	**1132**
Taken by IPSC	Date 20/3/02	Supervisor DRL/MS		Date		Approved B. Ingle	Date 21/3/02

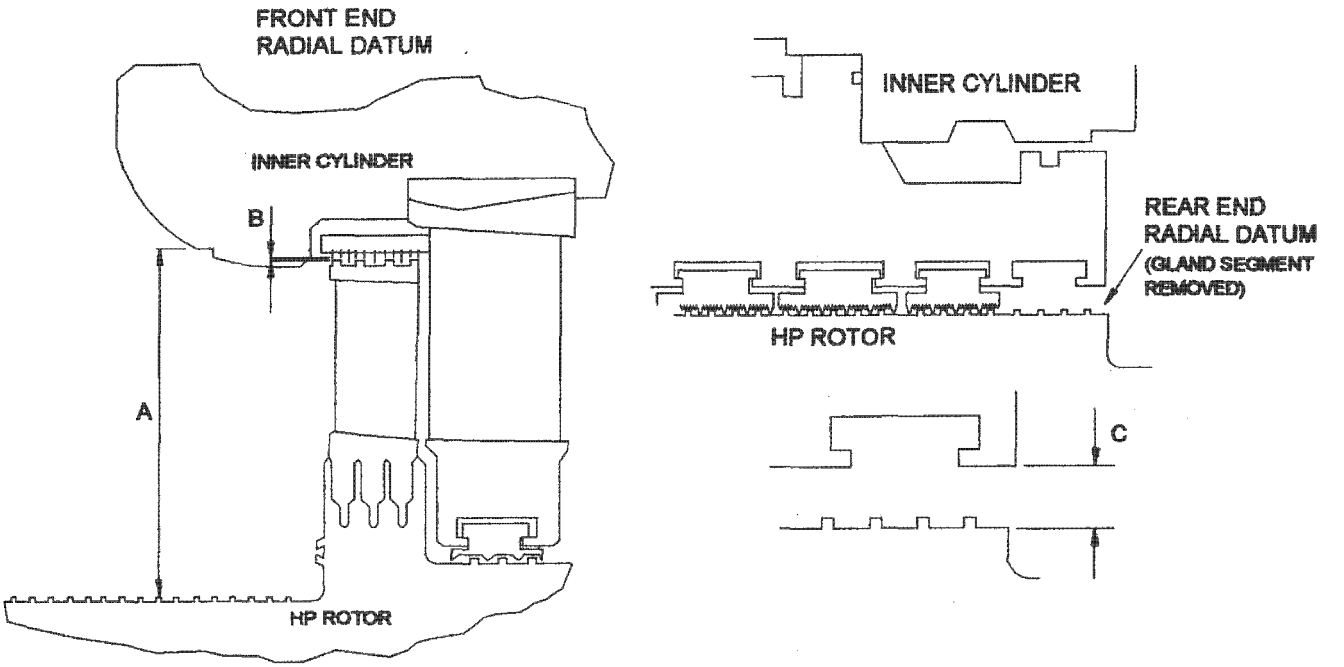

Readings in inches

	FRONT A		FRONT B		REAR C	
	SHOP	SITE	SHOP	SITE	SHOP	SITE
L.H.S.	—	N/R	.034	.032	.710	.709
TOP	—	N/A	N/A	N/A	N/A	N/A
R.H.S.	—	N/R	.032	.034	.711	.711

ALSTOM

QC 001

CHECK SHEET ISSUE STATUS AND COMPLETION RECORD

CONTRACT: **INTERMOUNTAIN** UNIT NO: **2** ST NO: **11245**

CHECKLIST NO: **1132**

SECTION NO: **6** TITLE: **HP CYLINDER - REBUILD** Sheet 1 of 2

PAGE NO	SHEET NO	DESCRIPTION	ISSUE	TS ENGR
6.1 ✓	HP20/001	HP Rotor bumping clearance and axial datums	A	
6.2 ✓	HP20/026	HP Inner cylinder to rotor axial datums - unboxed	A	
6.3 ✓	HP20/027	HP Inner & Outer cylinder/rotor radial datums - unboxed	A	
6.4 ✓	HP20/009	HP Inner cylinder/rotor radial datums - boxed	A	
6.5 ✓	HP20/018	HP/IP Rotor to casing vertical datums unboxed	A	
6.6 ✓	HP20/013	HP rotor to Front pedestal axial datum	A	
6.7 ✓	PD15/008	HP Rotor to Thrust pedestal axial datum	A	
~~6.8~~	~~PD15/008~~	~~IP Rotor to Thrust pedestal axial datum~~	~~A~~	
6.8/6.9 ~~6.9/6.10~~	HP11/036	HP Disc & diaphragm axial & radial clearances (2 Sheets)	A	
6.10	HP11/035	HP Rotor spill strip to shrouding clearances	A	
6.12	HP02/005	HP Shaft end gland clearances - box A Front	A	
6.13	HP02/005	HP Exhaust shaft gland clearances - box B Front	A	
6.14	HP02/005	HP Shaft cylinder gland clearances - box D Rear	A	
6.15	HP02/005	HP Shaft end gland clearances - box E Rear	A	
6.16	HP/CL2	HP Shaft gland box axial clearances - FRONT	A	
6.17	HP/CL1	HP Shaft gland box axial clearances - REAR	A	
6.18	HP05/007	HP Exhaust end gland 'B' carrier key clearances	A	
6.19	HP08/001	HP Gland box to cylinder half joint steps - boxes A, B, C & E	A	
6.20	HP24/028	HP Inner/Outer cyl half joint steps, axial & side datums	A	
6.21/6.23	PD09/002	HP Rotor radial bore readings	A	
6.24	HP02/011	HP Gland bore and joint gap checks - boxes A, B, D & E	A	
6.25	HP01/001	HP Shaft Gland Ring Butt Clearances	A	

RECORD SHEET **HP20/013** Page No. **6.6**

Title	**ROTOR TO FRONT PEDESTAL AXIAL DATUM**						
Contract	**INTERMOUNTAIN**			Unit No.	**2**	Serial No.	**11245**
Site Issue	**A**	Date	**17/02/02**	Checked	**BI**	Check List No.	**1132**
Taken by D. Llewellyn	Date 26/3/02	Supervisor		Date	Approved	B. Hyde	Date May

NEW HP ROTOR

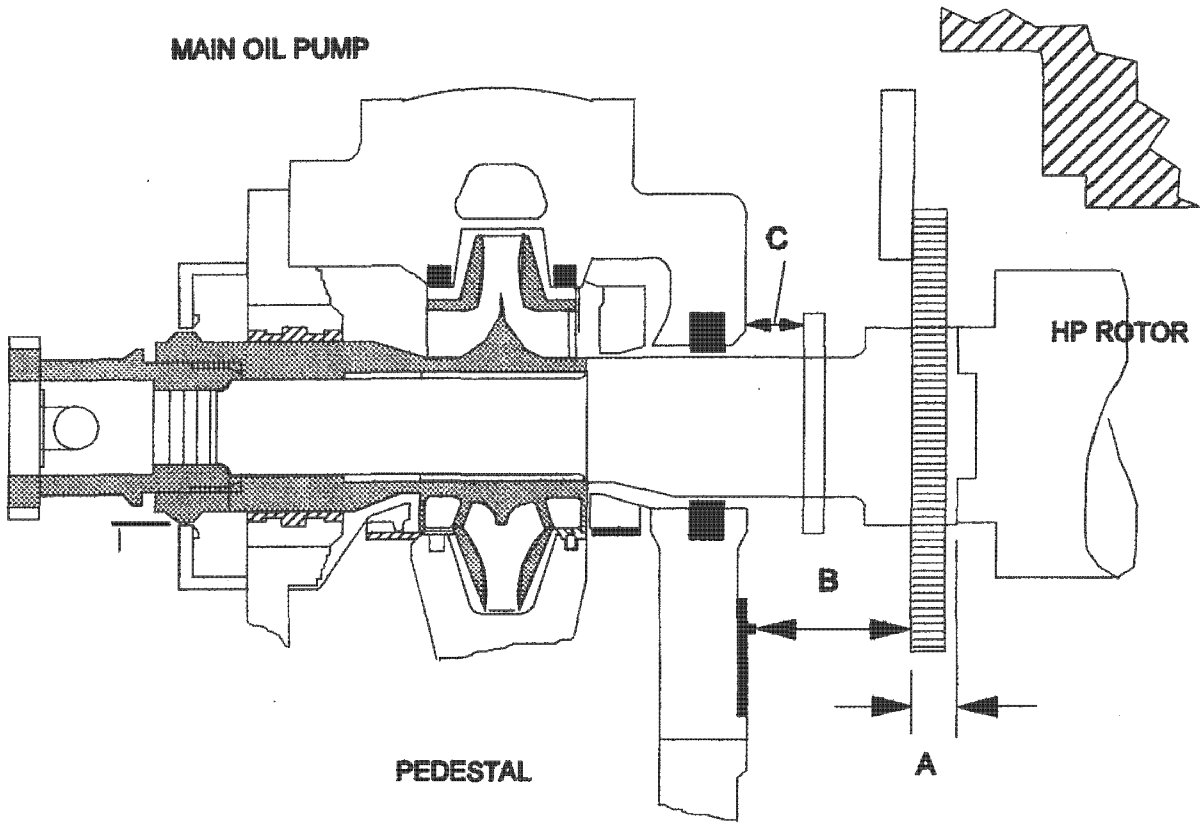

ROTOR TO T2 BEARING AXIAL DATUM = **5.762"** LHS

ROTOR TO BE IN COLD SET POSITION PUSHED TO **FRONT** Readings in inches

DATUM		POSITION
A	N/A	
B	8.027"	Pump casing to Wheel - LHS
C	1.086"	"

RECORD SHEET **PD15/008** Page No. **6.7**

Title	**HP ROTOR TO THRUST PEDESTAL AXIAL DATUM**						
Contract	**INTERMOUNTAIN**			Unit No.	**2**	Serial No.	**11245**
Site Issue	**A**	Date	**17/02/02**	Checked	**BI**	Check List No.	**1132**
Taken by W.Gasser	Date 25/3/02	Supervisor DRL/MS		Date	Approved	B. Ryle	Date 25/3/02

HP ROTOR AXIAL DATUM
IN THRUST PEDESTAL

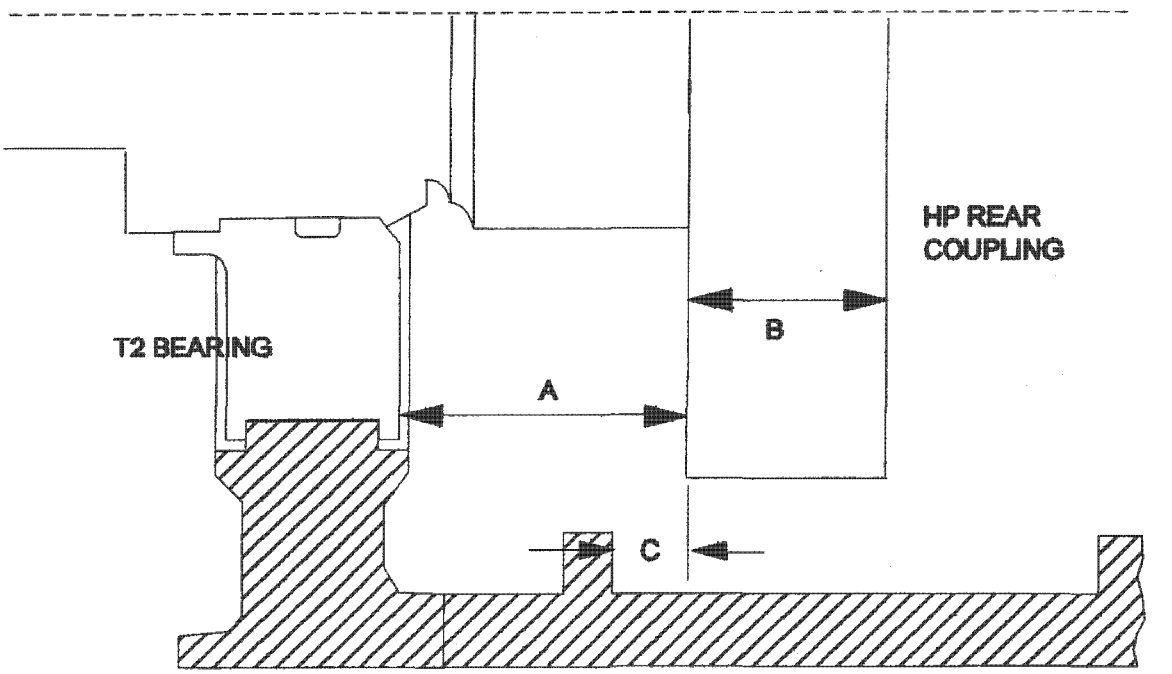

ROTORS TO BE IN COLD SET POSITION PUSHED TO THE **FRONT** Readings in inches

DATUM	NEW ROTOR	POSITION
A	**5.762**	LHS
B	5.743	N/A
C	**2.161**	LHS

RECORD SHEET	HP11/036 Sht 1	of 2			Page No.	6.8
Title	HP DIAPHRAGM & WHEEL CLEARANCES					
Contract	INTERMOUNTAIN		Unit No.	2	Serial No.	11245
Site Issue	A	Date	17/02/02	Checked	BI	Check List No. 1132
Taken by	Date	Supervisor		Date	Approved	Date

REF DRAWING : R277/1338 REV B

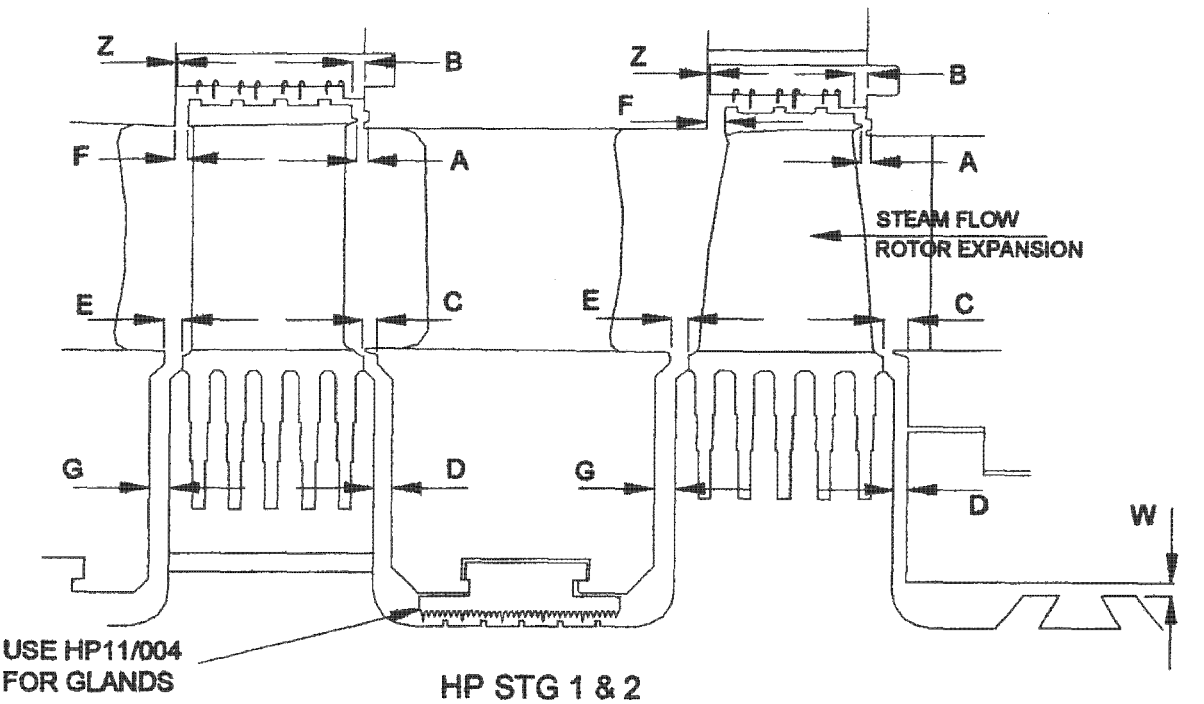

HP STG 1 & 2
TYPICAL FOR STAGES 3 TO 8

ALL AXIAL CLEARANCES TAKEN WITH ROTOR IN COLD SET POSITION.
MINIMUN CLEARANCE TO BE RECORDED.

RECORD SHEET HP11/023 Sht 2 of 2 Page No. 6.9

Title **H.P. DIAPHRAGM & WHEEL CLEARANCES**

Contract **INTERMOUNTAIN** Unit No. **2** Serial No. **11245**

Site Issue **A** Date **17/02/02** Checked **BI** Check List No. **1132**

Taken by P. Mc—— Date 20/3/02 Supervisor MLS Date Approved B. Ingle Date 21/3/

REF DRAWING: R277/1338 REV B

ROTOR AXIAL DATUM = **5.762"**
(HP Coupling to T2 Bearing)

(F= Front End, R= Rear End)

Readings in inches

BLADING STAGE			8	7	6	5	4	3	2	1
A	DESIGN		.224				.221	.213	.197	.185
	ACTUAL	LHS	SEE WORKS BUILD SECTION 5 PAGE 8							
		RHS								
B	DESIGN		.264				.260	.252	.236	.224
	ACTUAL	LHS	SEE WORKS BUILD SECTION 5 PAGE 8							
		RHS								
C	DESIGN		.288		.287	.299	.295	.287	.283	.213
	ACTUAL	LHS	SEE WORKS BUILD SECTION 5 PAGE 8							
		RHS								
D	DESIGN		.343		.366	.378	.382	.374		.276
	ACTUAL	LHS	SEE WORKS BUILD SECTION 5 PAGE 8							
		RHS								
E	DESIGN		.500	.496	.484	.472	.453	.429	.406	
	ACTUAL	LHS	SEE WORKS BUILD SECTION 5 PAGE 8							
		RHS								
F	DESIGN		.634	.496	.484	—	.453	.429	.406	
	ACTUAL	LHS	.595	SEE WORKS BUILD SECTION 5 PAGE 8						
		RHS	.587							
G	DESIGN		.823	.547		.524	.504	.480	.457	
	ACTUAL	LHS	.790	SEE WORKS BUILD SECTION 5 PAGE 8						
		RHS	.787							
Z	DESIGN		.039			1.496	.039			
	ACTUAL	LHS	SEE WORKS BUILD SECTION 5 PAGE 8							
		RHS								
W	DESIGN		'B' GLAND DESIGN = .427				'C' GLAND DESIGN = .315			
	ACTUAL	LHS	Not measured				SEE SECTION 5.8			
		RHS	"				"			

RECORD SHEET **HP11/035** Page No. **6.10**

Title **HP ROTOR SPILL STRIP TO SHROUDING CLEARANCES**

Contract **INTERMOUNTAIN** Unit No. **2** Serial No. **11245**

Site Issue **A** Date **17/02/02** Checked **BI** Check List No. **1132**

Taken by Date Supervisor Date Approved B. Ingle. Date Mar

REF DRAWING:
R277/1338 REV A

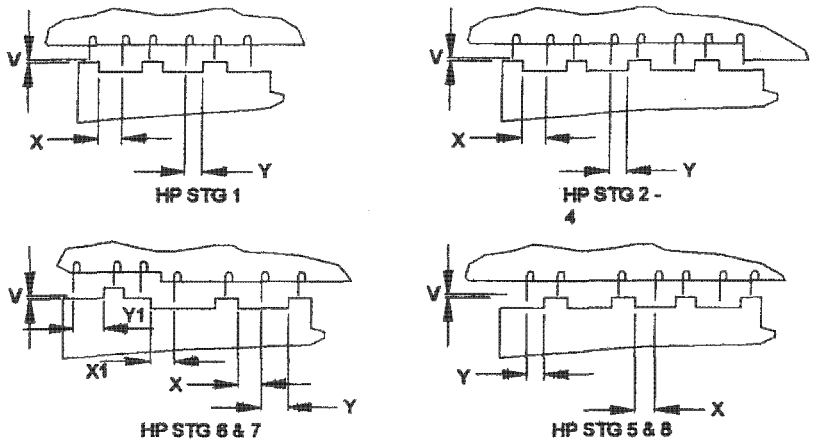

BLADING STAGE			8	7	6	5	4	3	2	1
V	TOP	DES	.031	.030	.028	.028	.028	.028	.043	.028
		ACT	See Section 5 Page 9							
	BOT	DES	.031	.030	.028	.028	.028	.028	.043	.028
		ACT	See Section 5 Page 9							
	DESIGN		.031	.030	.028	.028	.028	.028	.043	.028
	LHS	ACT	See Section 5 Page 9							
	RHS	ACT	"							
X	DESIGN		.244	.315	.354	.240	.240	.240	.220	.228
	ACTUAL	LHS	See Section 5 Page 9							
		RHS	"							
X1	DESIGN		—	.276	.236	—	—	—	—	—
	ACTUAL	LHS	—	See Section 5 Page 9		—	—	—	—	—
		RHS	—			—	—	—	—	—
Y	DESIGN		.476	.563	.610	.429	.421	.421	.365	.441
	ACTUAL	LHS	See Section 5 Page 9							
		RHS	"							
Y1	DESIGN		—	.488	.437	—	—	—	—	—
	ACTUAL	LHS	—	See Section 5 Page 9		—	—	—	—	—
		RHS	—	"		—	—	—	—	—

RECORD SHEET **HP02/005** Page No. **6.11**

Title **HP SHAFT END GLAND CLEARANCES - BOX A FRONT**

Contract **INTERMOUNTAIN** Unit No. **2** Serial No. **11245**

Site Issue **A** Date **17/02/02** Checked **BI** Check List No. **1132**

Taken by P. Mc—— Date 20/3/02 Supervisor M. Storey Date Approved B. Hyde Date 20/3/

REF DRAWING :- R277/1338 REV B

ROTOR AXIAL DATUM = 5.762" LHS
(HP Coupling to T2 Bearing)

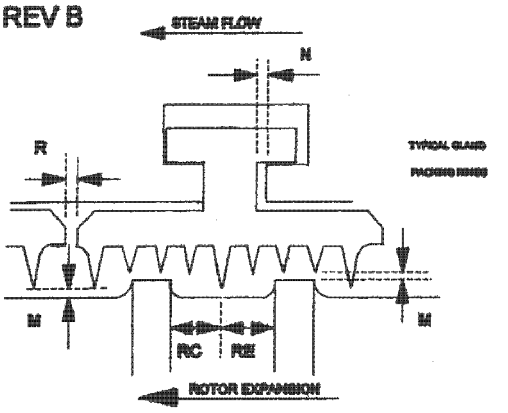

ALL CLEARANCES TAKEN WITH ROTOR IN COLD SET POSITION.

MINIMUM CLEARANCE TO BE RECORDED.

SEGMENTS TO BE PUSHED IN DIRECTION OF STEAM FLOW.

RE REDUCES WHEN ROTOR EXPANDS FASTER THAN CASING WITH THRUST AS FIXED DATUM.
RC REDUCES WHEN ROTOR CONTRACTS FASTER THAN CASING WITH THRUST AS FIXED DATUM.

(F= Front End, R= Rear End)
Readings in inches

GLAND RING NO.			A1 F	A2 R
RE (L)	DESIGN		.550	.550
	LHS		.570	.562
	RHS		.570	.540
RC (O)	DESIGN		.290	.290
	LHS		.273	.280
	RHS		.265	.275
M	TOP	DES	.025	.025
		ACT	.025	.026
	BOT	DES	.025	.025
		ACT	.025	.026
	LHS	DES	.025	.025
		ACT	.026	.025
	RHS	DES	.025	.025
		ACT	.027	.027
N	DESIGN		—	—
	LHS			
	RHS			
R	DESIGN		—	—
	LHS			
	RHS			

IP7007105

RECORD SHEET **HP02/005** Page No. **6.12**

Title **HP EXHAUST SHAFT GLAND CLEARANCES - BOX B FRONT**

Contract **INTERMOUNTAIN** Unit No. **2** Serial No. **11245**

Site Issue **A** Date **17/02/02** Checked **BI** Check List No. **1132**

Taken by P. Mc—— Date 20/3/02 Supervisor MLS Date Approved B. Hyde Date 20/3/

REF DRAWING :- R277/1338 REV A

ROTOR AXIAL DATUM = 5.762 LHS
(HP Coupling to T2 Bearing)

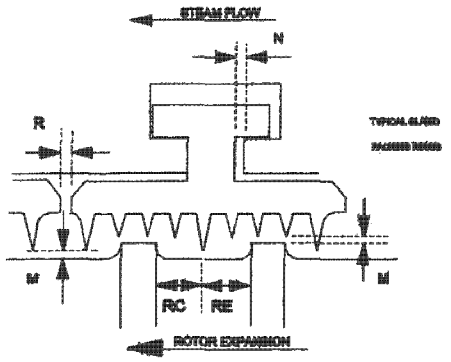

ALL CLEARANCES TAKEN WITH ROTOR IN COLD SET POSITION.

MINIMUM CLEARANCE TO BE RECORDED.

SEGMENTS TO BE PUSHED IN DIRECTION OF STEAM FLOW.

RE REDUCES WHEN ROTOR EXPANDS FASTER THAN CASING WITH THRUST AS FIXED DATUM.
RC REDUCES WHEN ROTOR CONTRACTS FASTER THAN CASING WITH THRUST AS FIXED DATUM.

(F= Front End, R= Rear End)
Readings in inches

GLAND RING NO.			B1	B2	B3	B4	B5
RE (L)	DESIGN		.550	.550	.550	.550	.550
	LHS		.550	.560	.558	.550	.550
	RHS		.550	.555	.560	.555	.555
RC (O)	DESIGN		.290	.290	.290	.290	.290
	LHS		.310	.290	.290	.293	.287
	RHS		.300	.287	.285	.285	.280
M	TOP	DES	.020	.020	.020	.020	.020
		ACT	.022*	-	.023	-	.022*
	BOT	DES	.020	.020	.020	.020	.020
		ACT	.018	-	.017	-	.018
	LHS	DES	.020	.020	.020	.020	.020
		ACT	.023	.018	.020	.018	.021
	RHS	DES	.020	.020	.020	.020	.020
		ACT	.021	.020	.020	.018	.020
N	DESIGN		—	—	—	—	—
	RHS						
R	DESIGN		—	—	—	—	—
	LHS						
	RHS						

* Tops off top lead minus Tops off/Tops on shift

IP7007106

RECORD SHEET **HP02/005** Page No. **6.13**

Title **HP SHAFT CYLINDER GLAND CLEARANCES - BOX D REAR**

Contract **INTERMOUNTAIN** Unit No. **2** Serial No. **11245**

Site Issue **A** Date **17/02/02** Checked **BI** Check List No. **1132**

Taken by Mc Date 20/3/02 Supervisor Date Approved B. Myle Date 20/3

REF DRAWING :- R277/1338 REV A

ROTOR AXIAL DATUM = 5.693 LHS
(HP Coupling to T2 Bearing)

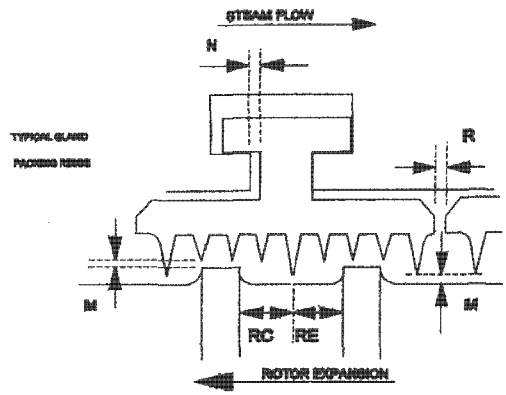

ALL CLEARANCES TAKEN WITH ROTOR IN COLD SET POSITION.

MINIMUM CLEARANCE TO BE RECORDED.

SEGMENTS TO BE PUSHED IN DIRECTION OF STEAM FLOW.

RE REDUCES WHEN ROTOR EXPANDS FASTER THAN CASING WITH THRUST AS FIXED DATUM.
RC REDUCES WHEN ROTOR CONTRACTS FASTER THAN CASING WITH THRUST AS FIXED DATUM.

(F= Front End, R= Rear End)
Readings in inches

GLAND RING NO.			D1	*D2	*D3	D4
RE (L)	DESIGN		.180	.180	.180	.180
	LHS		.188	.210	.195	.200
	RHS		.190	.205	.200	.188
RC (O)	DESIGN		.170	.170	.170	.170
	LHS		.170	.152	.155	.155
	RHS		.167	.150	.155	.160
M	TOP	DES	.020	.020	.020	.020
		ACT	.022	-	-	.024
	BOT	DES	.020	.020	.020	.020
		ACT	.032	-	-	.025
	LHS	DES	.020	.020	.020	.020
		ACT	.033	.022	.020	.020
	RHS	DES	.020	.020	.020	.020
		ACT	.035	.020	.032	.017
N	DESIGN		—	—	—	—
	LHS					
	RHS					
R	DESIGN		—	—	—	—
	LHS					
	RHS					

*= Retractable packings

IP7007107

RECORD SHEET **HP02/005** Page No. **6.14**

Title **HP SHAFT END GLAND CLEARANCES - BOX E REAR**

Contract **INTERMOUNTAIN** Unit No. **2** Serial No. **11245**

Site Issue **A** Date **17/02/02** Checked **BI** Check List No. **1132**

Taken by P. McAllum Date 20/3/02 Supervisor Date Approved B. Ingle Date 20/3/02 762

REF DRAWING :- R277/1338 REV A

ROTOR AXIAL DATUM = 5.8 LHS
(HP Coupling to T2 Bearing)

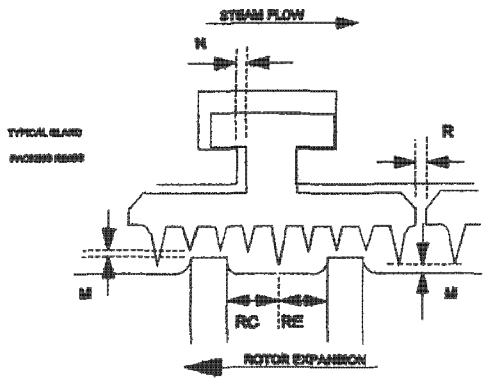

ALL CLEARANCES TAKEN WITH ROTOR IN COLD SET POSITION.

MINIMUM CLEARANCE TO BE RECORDED.

SEGMENTS TO BE PUSHED IN DIRECTION OF STEAM FLOW.

RE REDUCES WHEN ROTOR EXPANDS FASTER THAN CASING WITH THRUST AS FIXED DATUM.
RC REDUCES WHEN ROTOR CONTRACTS FASTER THAN CASING WITH THRUST AS FIXED DATUM.

(F= Front End, R= Rear End)
Readings in inches

GLAND RING NO.			E1	E2
RE (L)	DESIGN		.175	.175
	LHS		.160	.171
	RHS		.162	.172
RC (O)	DESIGN		.165	.165
	LHS		.190	.180
	RHS		.191	.185
M	TOP	DES	.025	.025
		ACT		.028
	BOT	DES	.025	.025
		ACT		.028
	LHS	DES	.025	.025
		ACT	.025	.025
	RHS	DES	.025	.025
		ACT	.024	.027
N	DESIGN		----	----
	LHS			
	RHS			
R	DESIGN		----	----
	LHS			
	RHS			

IP7007108

RECORD SHEET **HP/CL2** Page No. **6.15**

Title	**HP SHAFT GLAND BOX AXIAL CLEARANCES - FRONT**						
Contract	**INTERMOUNTAIN**			Unit No.	**2**	Serial No.	**11245**
Site Issue	**A**	Date	**17/02/02**	Checked	**BI**	Check List No.	**1132**
Taken by w.Gasser	Date 25/3/02	Supervisor M. Storey		Date	Approved	B. Mafe	Date 20/3

REF DRAWING :- R217/A0/1338 Rev. B

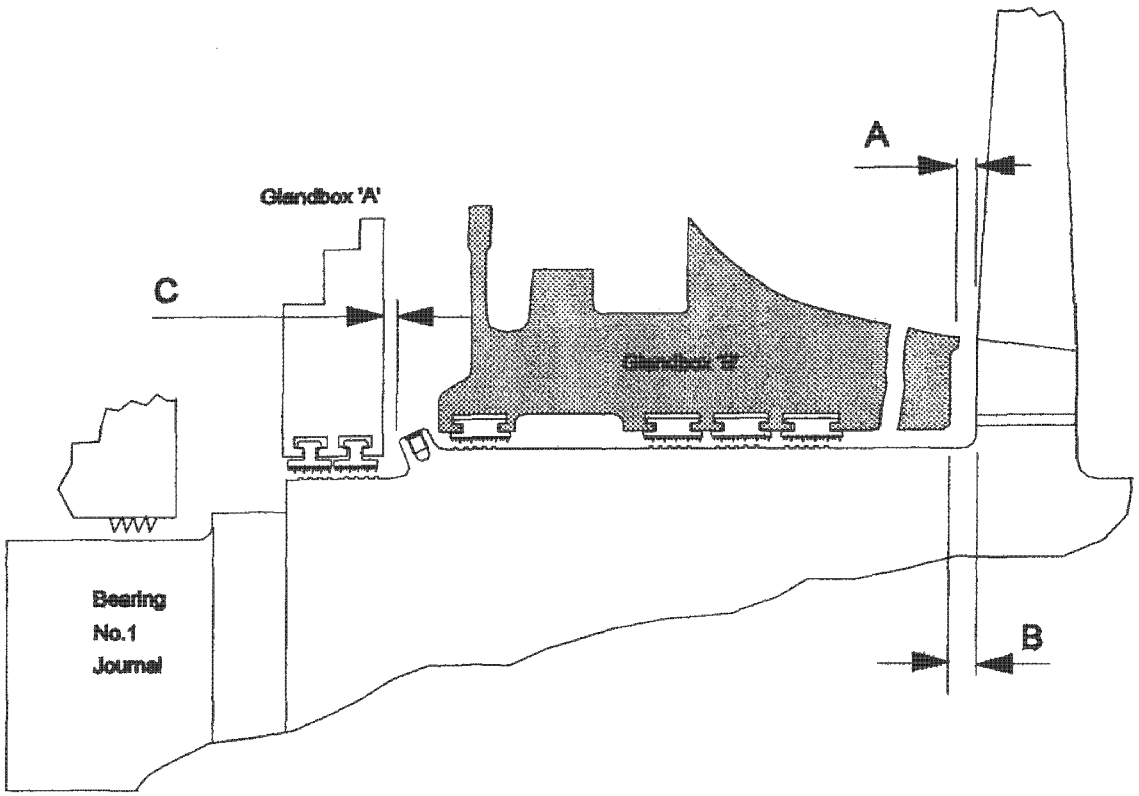

ROTOR AXIAL DATUM = **5.762 LHS**
(HP Coupling to T2 Bearing)
Readings in inches

ROTOR IN THE COLD SET POSITION PUSHED TO **FRONT**

POSITION	A (RE)	B (RE)	C (RE)	
DESIGN	.634	.823	.820	
LHS	.595	.790	.769	
RHS	.587	.787	.763	

RE = ROTOR EXPANDING CLEARANCE **RC** = ROTOR CONTRACTING CLEARANCE

Title	HP SHAFT GLAND BOX AXIAL CLEARANCES - REAR						
Contract	INTERMOUNTAIN			Unit No.	2	Serial No.	11245
Site Issue	A	Date	17/02/02	Checked	BI	Check List No.	1132
Taken by W. Gasser	Date 25/3/02	Supervisor M. Storey		Date	Approved	B. Ingle	Date 25/3/

REF DRAWING :- R217/A0/1338 Rev. B

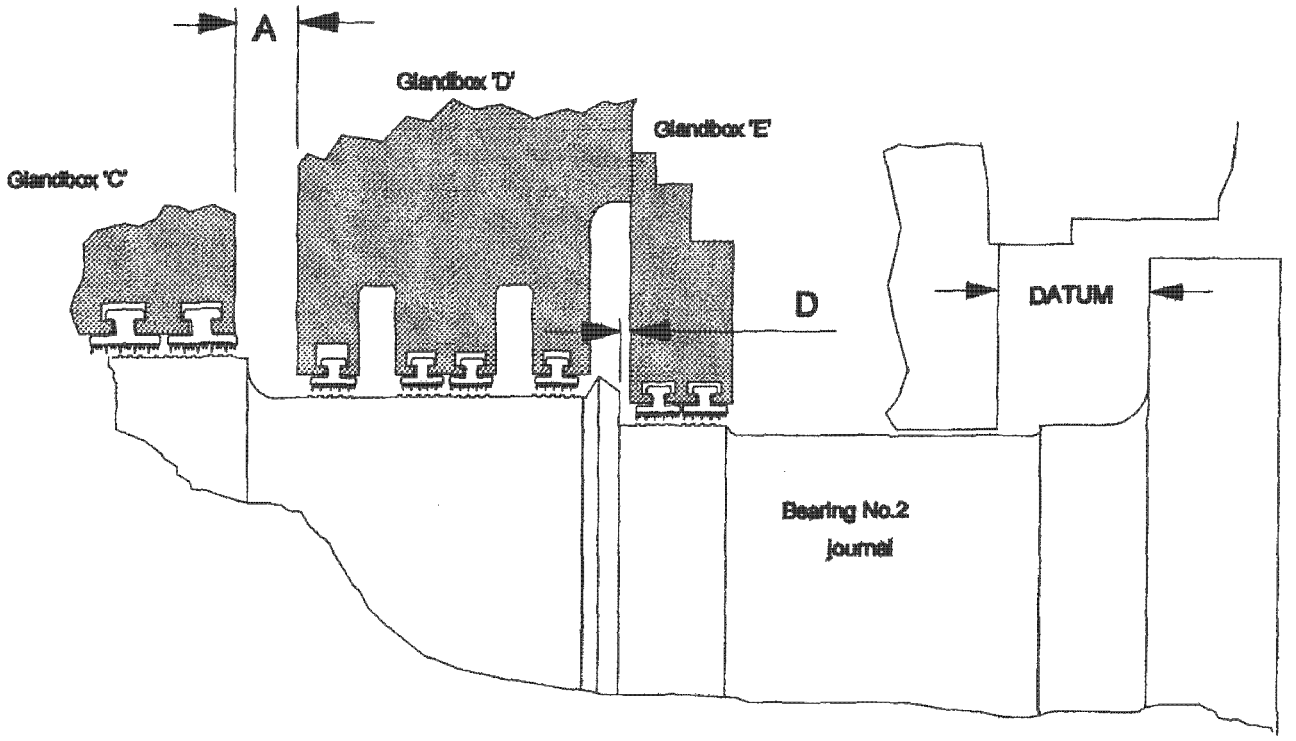

ROTOR AXIAL DATUM = **5.762 LHS**
(HP Coupling to T2 Bearing)
Readings in inches

ROTOR IN THE COLD SET POSITION PUSHED TO **FRONT**

POSITION	A	B (RC)	C (RE)	D (RC)
DESIGN		N/A	N/A	1.054
LHS	3.266	—	—	1.048
RHS	3.268	—	—	1.059

RE = ROTOR EXPANDING CLEARANCE **RC** = ROTOR CONTRACTING CLEARANCE

RECORD SHEET **HP05/007** Page No. **6.17**

Title	**HP EXHAUST END GLAND 'B' CARRIER KEY CLEARANCES**						
Contract	**INTERMOUNTAIN**			Unit No.	**2**	Serial No.	**11245**
Site Issue	**A**	Date	**17/02/02**	Checked	**BI**	Check List No.	**1132**
Taken by W. Gasser	Date 7/3/02	Supervisor M. Storey		Date		Approved B. Ingle	Date Mar

REF DRWNG :-

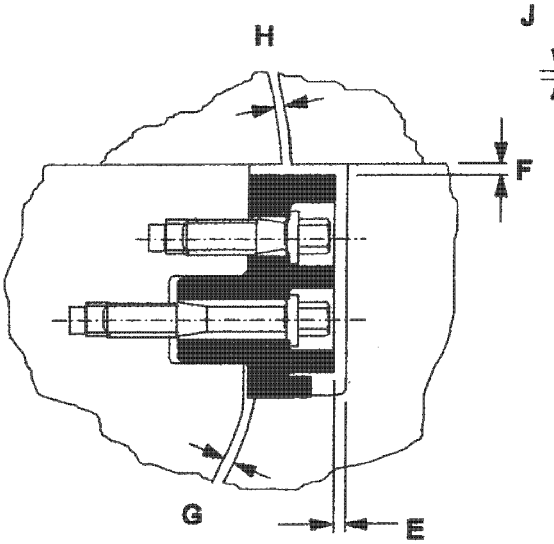

Side support key

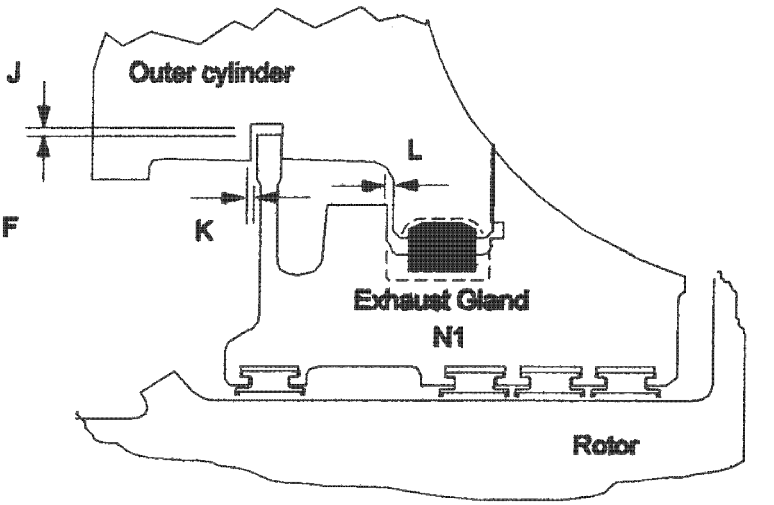

Readings in inches

SIDE SUPPORT KEYS				
POSITION	E	F	G	H
DESIGN	—	—	—	—
LHS	.309	-.009	.137	N/R
RHS	.273	-.008	.113	"

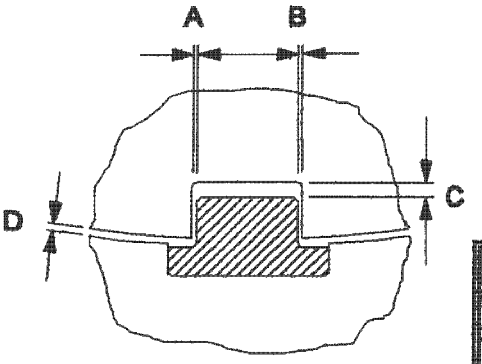

Bottom
Centralising key

BOTTOM CENTRALISING KEY			
POSITION	A + B	C	D
DESIGN	—	—	—
BOTTOM	.005	.192	.130

AXIAL LOCATION CLEARANCES						
POS	J		K		L	
DES	—		—		—	
			LHT	N/R	LH Top	N/R
LHS	.298	N/R	RHT	"	RH Top	"
C/L	N/A	"	LHB	.013	LH Bot	.001
RHS	.273	"	RHB	.012	RH Bot	.015

RECORD SHEET **HP08/001** Page No. **6.18**

Title	**HP GLAND BOX TO OUTER CYLINDER HALF JOINT STEPS**						
Contract	**INTERMOUNTAIN**			Unit No.	**2**	Serial No.	**11245**
Site Issue	**A**	Date	**17/02/02**	Checked	**BI**	Check List No.	**1132**
Taken by P. Mc——	Date 20/3/02	Supervisor M. Storey		Date		Approved	B. Hyde Date 21/3/4

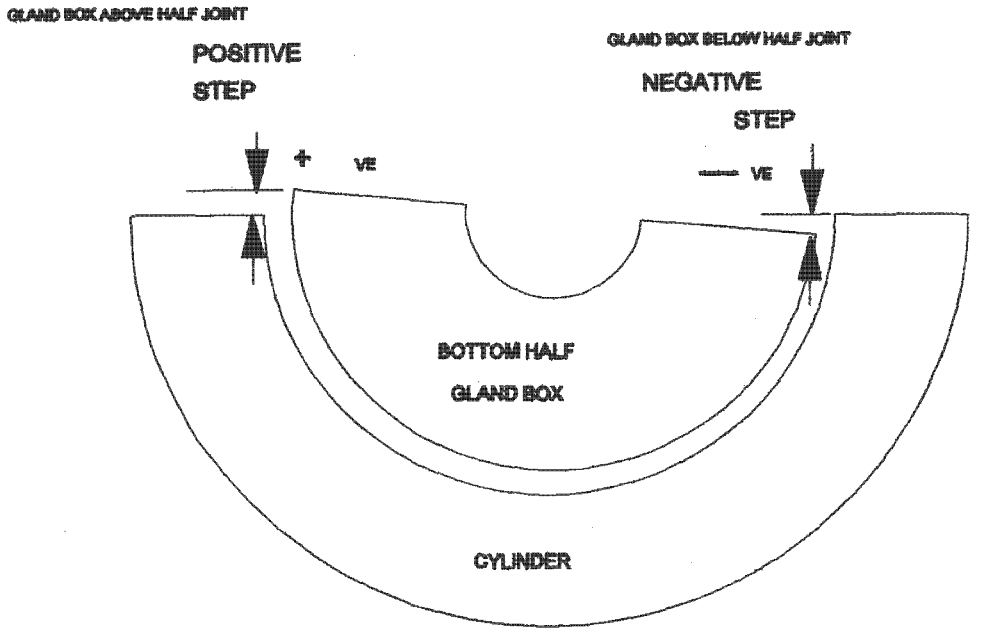

POSITION AT WHICH READINGS ARE TAKEN TO BE MARKED 'X'

Readings in inches

	BOLT ON GLAND BOX A FRONT CORNER	BOLT ON GLAND BOX A REAR CORNER	EXHAUST GLAND BOX B FRONT CORNER	EXHAUST GLAND BOX B REAR CORNER	BOLT ON GLAND BOX E FRONT CORNER	BOLT ON GLAND BOX E REAR CORNER
LHS	-.013	N/A	-.015	-.014	N/A	+.011
RHS	-.013	N/A	-.006	-.006	N/A	.000

NOTE + SIGN TO INDICATE BUSH PROUD OF CYLINDER HALF JOINT
- SIGN TO INDICATE BUSH BELOW CYLINDER HALF JOINT.

RECORD SHEET **HP24/028** Page No. **6.19**

Title	**HP INNER/OUTER CYL HALF JOINT STEPS, AXIAL & SIDE DATUMS**						
Contract	**INTERMOUNTAIN**			Unit No.	**2**	Serial No.	**11245**
Site Issue	**A**	Date	**17/02/02**	Checked	**BI**	Check List No.	**1132**
Taken by D. Llewellyn	Date 21/3/01	Supervisor		Date		Approved B. Nagle	Date 21/3/01

Readings X 0.001"

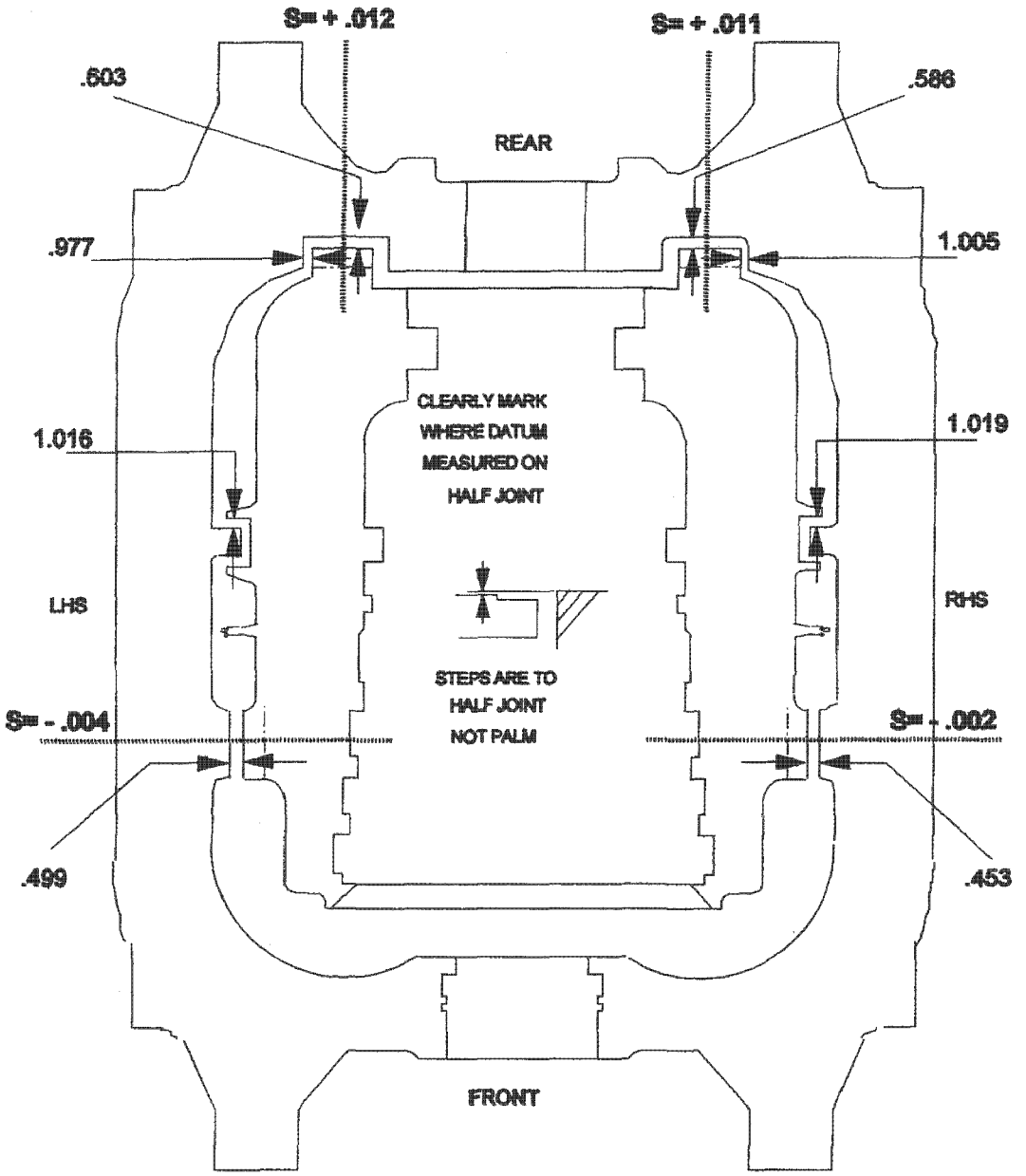

\+ = INNER HIGHER THAN OUTER

\- = INNER LOWER THAN OUTER

S = HALF JOINT STEP

IP7007113

RECORD SHEET **PD09/002** Page No. **6.20**

Title **HP ROTOR POSIT. RADIAL CHKS -ON BUILDING KEYS UNBOXED**

Contract **INTERMOUNTAIN** Unit No. **4** Serial No. **11245**

Site Issue **A** Date **12/02/02** Checked **BI** Check List No. **1132**

Taken by W. Gasser Date 20/3/02 Supervisor M. Storey Date Approved B. Ingle Date

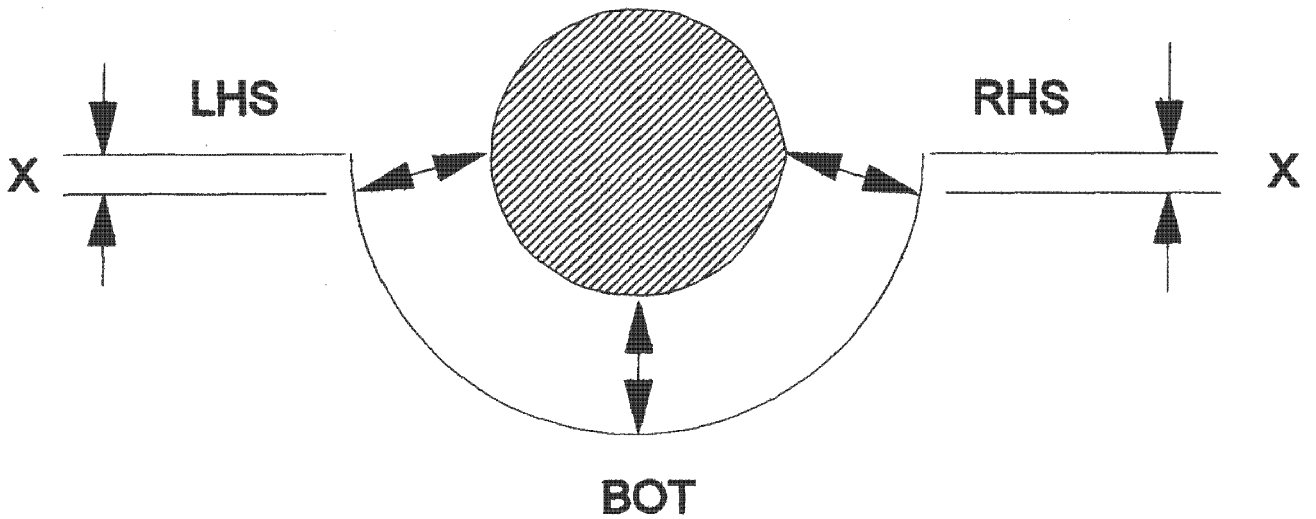

DIMENSION X = FOR ALL SIDE DATUMS

Type Stamp Identification Letter on the Half Joints, in line with, and close to, the bore being measured from.

Readings in inches

DATUM POSITION		UNBOXED DATUMS- ON BUILD KEYS			COMMENTS
		LHS	BOT/TOP	RHS	
T1 PEDESTAL BORE		7.631	6.526	7.661	
FRONT BOLT-0N GLAND- SEGMENT REMOVED		.886	.884	.886	Casing .002" Hi
CYLINDER BORE - FRONT	TOP HALF	N/A	N/A	N/A	
	BOTT HALF	9.646	--	9.647	
CYLINDER BORE - REAR	TOP HALF	N/A	N/A	N/A	
	BOTT HALF	8.148	--	8.147	
REAR BOLT-0N GLAND- SEGMENT REMOVED		.875	.882	.878	Casing .005½" Lo
T2 PEDESTAL BORE		9.992	10.078	10.009	

RECORD SHEET **PD09/002** Page No. **6.21**

Title **HP ROTOR POSITION RADIAL- ON BUILDING KEYS BOXED**

Contract **INTERMOUNTAIN** Unit No. **2** Serial No. **11245**

Site Issue **A** Date **12/02/02** Checked **BI** Check List No. **1132**

Taken by W. Gasser Date 24/3/02 Supervisor M. Storey Date Approved B. Hyde Date 24/4

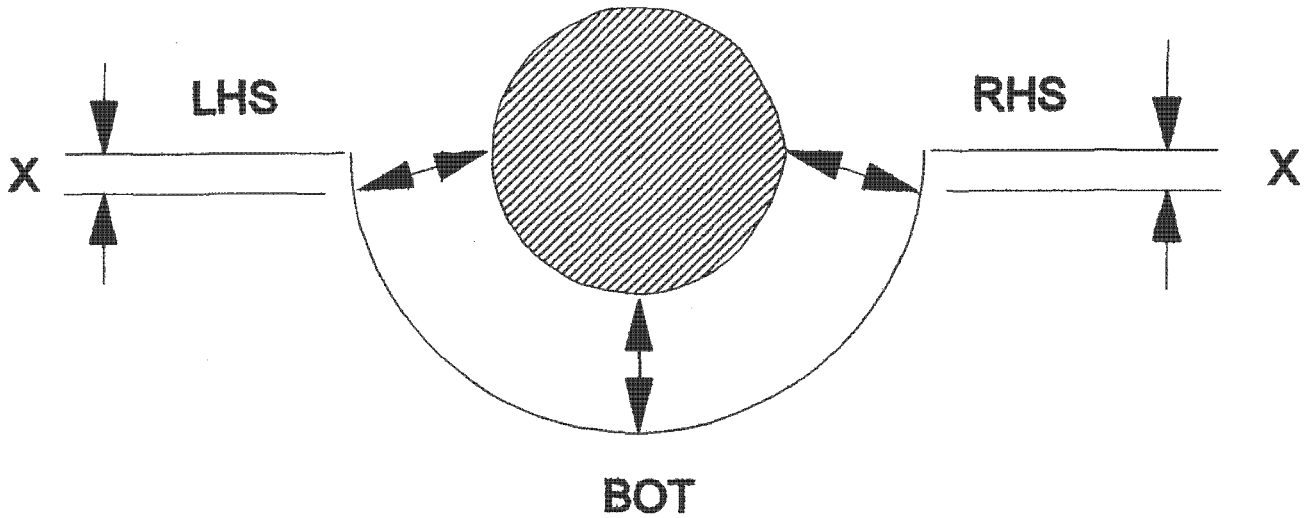

DIMENSION X = FOR ALL SIDE DATUMS

Type Stamp Identification Letter on the Half Joints, in line with, and close to, the bore being measured from.

Readings in inches

DATUM POSITION		BOXED DATUMS- ON BUILD KEYS			COMMENTS
		LHS	BOT/TOP	RHS	
T1 PEDESTAL BORE		N/A	N/A	N/A	
FRONT BOLT-ON GLAND- SEGMENT REMOVED		.885	.884	.886	Casing .001½"Hi
CYLINDER BORE - FRONT	TOP HALF	9.670	9.669	9.649	
	BOTT HALF	9.662	N/A	9.649	
CYLINDER BORE - REAR	TOP HALF	8.167	8.171	8.165	
	BOTT HALF	8.148	N/A	8.153	
REAR BOLT-ON GLAND- SEGMENT REMOVED		.879	.869	.879	Casing .010" Hi
T1 PEDESTAL BORE		N/A	N/A	N/A	

RECORD SHEET **PD09/002** Page No. **6.22**

Title **HP ROTOR POSITION RADIAL- ON RUNNING KEYS BOXED**

Contract **INTERMOUNTAIN** Unit No. **2** Serial No. **11245**

Site Issue **A** Date **12/02/02** Checked **BI** Check List No. **1132**

Taken by W.Gasser/DRL Date 25/3/02 Supervisor DRL / MLS Date Approved B. Angle Date 25/3/

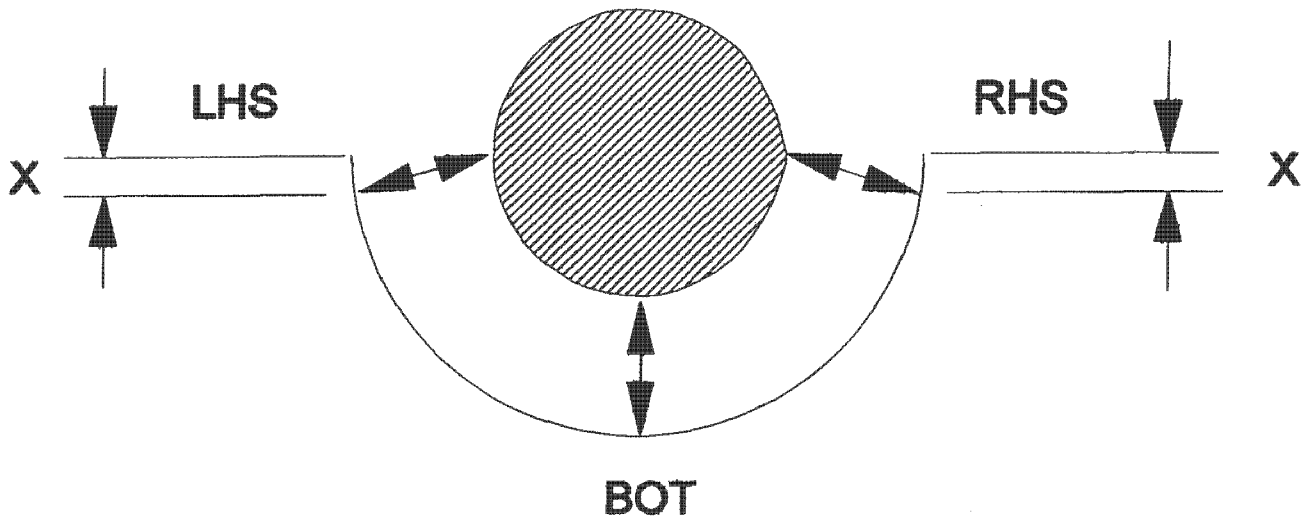

DIMENSION X = FOR ALL SIDE DATUMS

Type Stamp Identification Letter on the Half Joints, in line with, and close to, the bore being measured from.

Readings in inches

DATUM POSITION		BOXED DATUMS- ON RUNNING KEYS			COMMENTS
		LHS	BOT/TOP	RHS	
T1 PEDESTAL BORE		N/A	N/A	N/A	
FRONT BOLT-0N GLAND- SEGMENT REMOVED		.886	.886	.886	
CYLINDER BORE - FRONT	TOP HALF	9.668	9.664	9.648	
	BOTT HALF	9.663	N/A	9.649	
CYLINDER BORE - REAR	TOP HALF	8.166	8.161	8.161	
	BOTT HALF	8.150	N/A	8.157	
REAR BOLT-0N GLAND- SEGMENT REMOVED		.878	.876	.875	
T1 PEDESTAL BORE		N/A	N/A	N/A	

RECORD SHEET **HP02/011** Page No. **6.23**

Title **HP STEAM GLAND BORE CHECKS - BOXES 'A','B', 'D' & 'E'**

Contract **INTERMOUNTAIN** Unit No. 2 Serial No. **11245**

Site Issue **A** Date **17/02/02** Checked **BI** Check List No. **1132**

Taken by Various Date 14/3/02 Supervisor DRL / MLS Date Approved B. Hyde Date 25/3

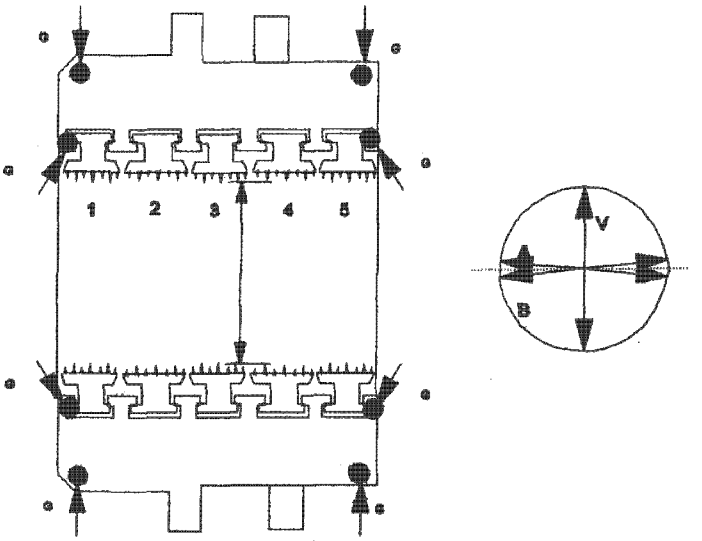

SF = Short Fin. LF = Long Fin.
F = Front End, R = Rear End

Readings in inches

RING NO.	REQUD SIZE BOLTED	FIN	BORE - X			HALF JOINT GAP - G (0.001")				
			VERT BORE - V	HORIZONTAL			LHS		RHS	
				A	B		OUTER	INNER	INNER	OUTER
A1	N/A	Bore	21.753	21.743	21.761	FRONT	0	0	0	0
A2	N/A	Bore	21.751	21.741	21.757	REAR	0	0	0	0
B1	N/A	Bore	25.497	25.505	25.507					
B2	N/A	Bore	Not measured			FRONT	.001	.001	.001	.001
B3	N/A	Bore				REAR	.001	.001	.001	.001
B4	N/A	Bore	25.494	25.502	25.501					
D1	N/A	Bore	29.745	29.734	29.728					
D2	N/A	Bore	Not measured			FRONT	.017	.026	.026	.016
D3	N/A	Bore				REAR	0	.003	.007	0
D4	N/A	Bore	29.755	29.748	29.744					
E1	N/A	Bore	24.755	24.741	24.742	FRONT	0	.004	.002	0
E2	N/A	Bore	24.750	24.746	24.741	REAR	0	0	.001	0

RECORD SHEET HP01/001 Page No. 6.24

Title **GLAND RING BUTT CLEARANCE FOR HP SHAFT GLANDS**

Contract	INTERMOUNTAIN			Unit No.	2	Serial No.	11245
Site Issue	A	Date	17/02/02	Checked	BI	Check List No.	1132
Taken by	Date	Supervisor		Date	Approved		Date

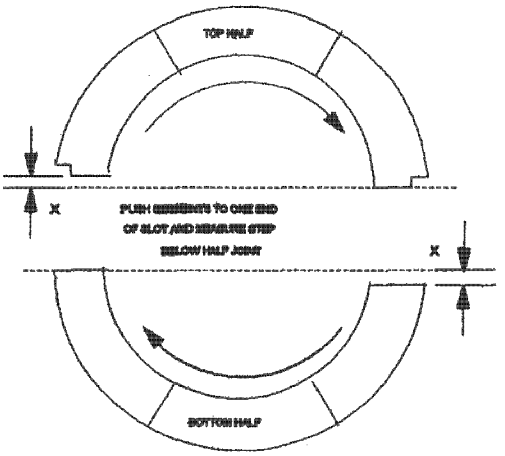

IRRESPECTIVE OF THE NUMBER OF SEGMENTS BUTT CLEARANCE 'X'
IS THE CUMULATIVE TOTAL OF ALL SEGMENTS IN EACH HALF RING

Readings in inches

GLAND POSITION	RING NUMBER	BUTT CLEARANCE 'X'			
		DESIGN TOTAL	ACTUAL		
			TOP HALF	BOT HALF	TOTAL
'A'	1				
	2				
'B'	1				
	2				
	3				
	4				
	5				
'D'	1				
	2				
	3				
	4				
'E'	1				
	2				

RECORDS WITH IPSC/TORBOCARE

IP7007118

RECORD SHEET **HP/CL3** Page No. **6.25**

Title	**HP GLANDBOX AXIAL AND RADIAL MISMATCH - BOXES 'A', 'D' & 'E'**						
Contract	**INTERMOUNTAIN**			Unit No.	**2**	Serial No.	**11245**
Site Issue	**A**	Date	**17/02/02**	Checked	**BI**	Check List No.	**1132**
Taken by S. Rowley	Date 14/3/02	Supervisor	M. Storey	Date		Approved	B. Hagle Date 15/3/02

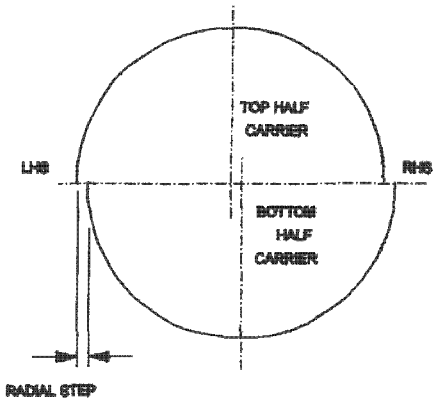

RADIAL OFFSET

Top half to the LHS read positive (+).
Top half to the RHS read negative(-).

AXIAL OFFSET

Top half to the front read positive (+)
Top half to the rear read negative(-).

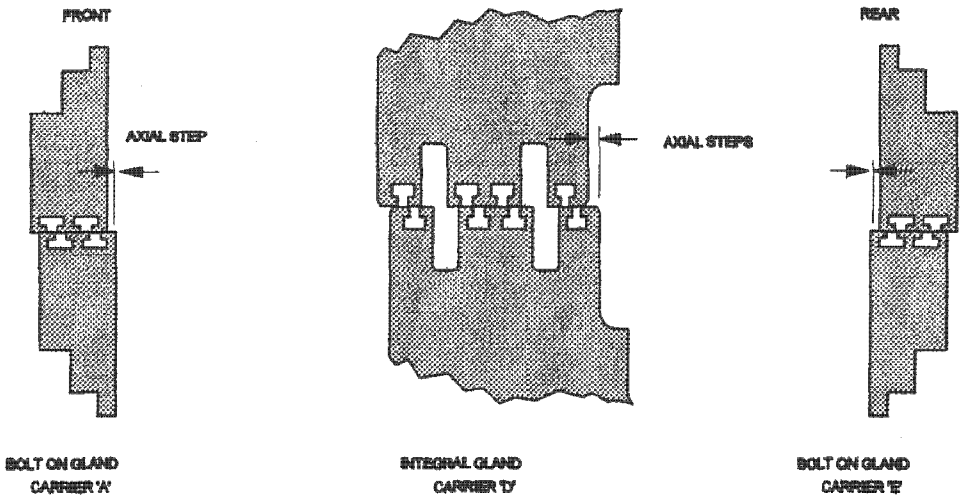

Readings in inches

POSITION	RADIAL STEPS		AXIAL STEPS	
	LHS	RHS	LHS	RHS
Gland box 'A' Front	-.009	+.009	+.010	+.006
Gland box 'A' Rear	-.009	+.003	-.006	-.004
Gland box 'D' Front	Not measured			
Gland box 'D' Rear	"			
Gland box 'E' Front	+.006	+.006	-.003	0
Gland box 'E' Rear	-.004	+.004	+.003	0

RECORD SHEET **HP16/007** Page No. **6.41**

Title **HP RADIAL CLEARANCES (LASER METHOD)**

Contract **INTERMOUNTAIN** Unit No. **2** Serial No. **11245**

Site Issue **A** Date **26/03/02** Checked **BI** Check List No. **1132**

Taken by Date Supervisor Date Approved Date

Readings in inches

POSITION OF GLAND	ROTOR SAG RELATIVE TO A2&E2	ELLIPT. OFFSET	OFF/ON SHIFT	VERT IDEAL	ACTUAL RELATIVE TO IDEAL	TOTAL CLEAR'CE	BOTTOM CLEAR'CE	TOP CLEAR'CE
A1						.050	.025	.025
A2	0	0	0	0	0	.052	.026	.026
B1	-1	5	-4	8	8	.040	.018	*022
B2							-	-
B3	-2	4	-7	9	4	.040	.017	.023
B4							-	-
B5	-3	2	-9	8	2	.040	.018	*.022
St 8	-5	0	-13	8	-2	.048	.025	.023
St2	-6	0	-11	5	-3	.068	.033	.035
C1	-5	0	-8	3	0	.052	.026	.026
C7	-3	0	-8	5	-3	.050	.030	.020
D1	-2	-10	0	-12	-5	.054	.032	.022
D2/D3	-1	-6	-1	-6	-2	-	-	-
D4	0	-7	1	-8	0	.049	.025	.024
E1						.062	-	-
E2	0		0	0	0	.056	.028	.028

ALL ABOVE RELATIVE TO A1 AND E2.
OUTER CASING SUPPORT PACKERS ADJUSTED TO GIVE 0-0-0 AT A2 AND E2 WITH CASINGS BOXED UP.
*Open top lead minus tops off/ tops on shift.

QC 001

CHECK SHEET ISSUE STATUS AND COMPLETION RECORD

CONTRACT: INTERMOUNTAIN UNIT NO: 2 ST NO: 11245

CHECKLIST NO: 1132

SECTION NO: 8 TITLE: COUPLINGS - REBUILD

PAGE NO	RECORD SHT NO	DESCRIPTION	ISSUE	TS ENGR
8.1	CP01/002	HP / IP Rotor alignment - shell weight off	A	B. Hayle
8.1	CP01/002	HP / IP Rotor alignment - shell weight on	A	
8.2/8.5	CP02/001	HP/IP Coupled rotors concentricity	A	
8.6	CP03/003	Coupling bolt/sleeve data (Hydraulic bolts)	A	
8.7	CP04/003	Hydraulic coupling bolt tightening checks and stretch	A	

RECORD SHEET **CP01/002** Page No. **8.1**

Title **ROTOR COUPLING ALIGNMENT - HP/IP - WEIGHT OFF**

Contract **INTERMOUNTAIN** Unit No. **2** Serial No. **11245**

Site Issue **A** Date **15/2/02** Checked **BI** Check List No. **1132**

Taken by IPSC Date 20/3/02 Supervisor Date Approved B. Wyle Date 20/3/02

ROTOR 'A' **HP**
BRIDGE GAUGE
READING =

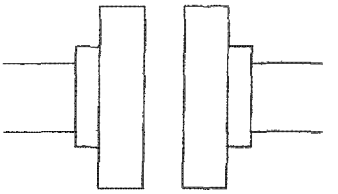

IP ROTOR 'B'
BRIDGE GAUGE
READING =

ALL READINGS WITH COUPLING DATUMS IN LINE TURNING BOTH ROTORS TOGETHER

COUPLING PERIPHERY ALIGNMENT
(AXES ALIGNMENT)

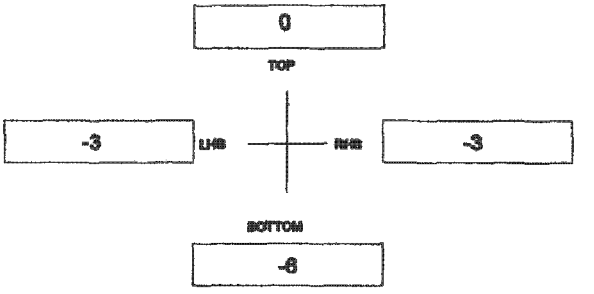

*** CLOCK/XXXXXX MOUNTED ON IP COUPLING**

READING ARE INCH *

COUPLING GAP
(ANGULAR ALIGNMENT)

	LHS	TOP	RHS	BOTTOM (CALC)
0°	.094	.093	.089	0.09
90°	.093	.092	.091	0.092
180°	.0925	.092	.091	0.0915
270°	.090	.090	.090	0.09
TOTAL	0.3695	0.367	0.361	0.3635
AVERAGE	0.092375	0.09175	0.09025	0.090875

READING ARE INCH *

AVERAGE GAP

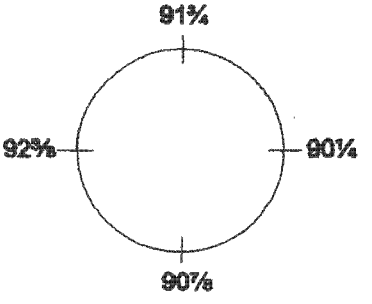

RECORD SHEET **CP01/002** Page No. **8.2**

Title **ROTOR COUPLING ALIGNMENT - HP/IP - WEIGHT ON**

Contract **INTERMOUNTAIN** Unit No. **2** Serial No. **11245**

Site Issue **A** Date **15/2/02** Checked **BI** Check List No. **1132**

Taken by IPSC Date 23/3/02 Supervisor Date Approved B. Hayle Date 23/

ROTOR 'A' BRIDGE GAUGE READING =

HP

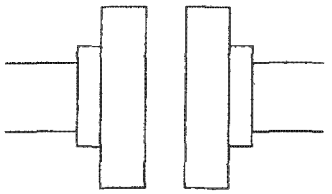

IP

ROTOR 'B' BRIDGE GAUGE READING =

ALL READINGS WITH COUPLING DATUMS IN LINE TURNING BOTH ROTORS TOGETHER

COUPLING PERIPHERY ALIGNMENT
(AXES ALIGNMENT)

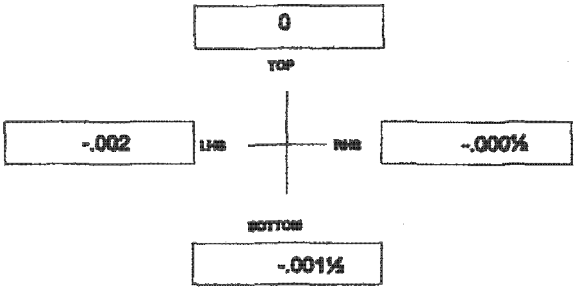

* CLOCK/XXXXXX MOUNTED ON IP COUPLING

READING ARE INCH *

COUPLING GAP
(ANGULAR ALIGNMENT)

	LHS	TOP	RHS	BOTTOM (CALC)
0°	.274	.273	.271	0.272
90°	.274	.273	.272	0.273
180°	.274	.2735	.273	0.2735
270°	.2745	.273	.272	0.2735
TOTAL	1.0965	1.0925	1.088	1.092
AVERAGE	0.274125	0.273125	0.272	0.273

READING ARE INCH *

AVERAGE GAP

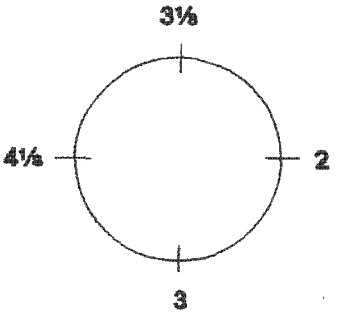

RECORD SHEET CP02/001 Page No. 8.3

Title **HP/IP COUPLED ROTORS CONCENTRICITY**

Contract **INTERMOUNTAIN** Unit No. **2** Serial No. **11245**

Site Issue **A** Date **15/2/02** Checked **BI** Check List No. **1132**

Taken by DRL. Date 16/3/02 Supervisor Date Approved B. Tryle Date 17/3/6

4 SLAVE BOLTS

ALL READINGS ARE 0.0001" RUN 'A'

ANGULAR POSITION DEGREES/BOLT HOLES	ROTOR [HP]			ROTOR [IP]		CALCULATION			
	JOURNAL (Ja)	COUPLING (Ca)		COUPLING (Cb)	JOURNAL (Jb)	Ja -Jb		Ca - Cb	
0°	33	38		40	22	11.0	——	-2.0	——
45°	33	41		44	22	11.0	——	-3.0	——
90°	33	40		45	22	11.0	——	-5.0	——
135°	33	33		39	22	11.0	——	-6.0	——
180°	33	29		32	22	11.0	0.0	-3.0	1.0
225°	33	28		30	22	11.0	0.0	-2.0	-1.0
270°	32	30		30	22	10.0	1.0	0.0	-5.0
315°	32	32		32	23	9.0	2.0	0.0	-6.0
360°	32	36		38	22	10.0	1.0	-2.0	-1.0

CONCENTRICITY ERROR = 1/2 MAX. DIFFERENCE OF PAIRS OF JOURNAL/COUPLING READINGS 180° APART.

JOURNAL CONCENTRICITY ERROR = 1 X .0001"

COUPLING CONCENTRICITY ERROR = 3 X .0001"

RECORD SHEET CP02/001 Page No. 8.4

Title HP/IP COUPLED ROTORS CONCENTRICITY

Contract INTERMOUNTAIN Unit No. 2 Serial No. 11245

Site Issue A Date 15/2/02 Checked BI Check List No. 1132

Taken by M. Storey Date 18/3/02 Supervisor Date Approved B. Moyle Date 18/3/0

4 RADIAL FIT BOLTS EXPANDED AND STRETCHED

ALL READINGS ARE 0.0001"

ANGULAR POSITION DEGREES/BOLT HOLES	ROTOR [HP]			ROTOR [IP]		CALCULATION			
	JOURNAL (Ja)	COUPLING (Ca)		COUPLING (Cb)	JOURNAL (Jb)	Ja -Jb		Ca - Cb	
0°	36	37		29	31	5.0	——	8.0	——
45°	37	38		39	31	6.0	——	-1.0	——
90°	37	38		39	31	6.0	——	-1.0	——
135°	38	34		33	31	7.0	——	1.0	——
180°	38	30		26	31	7.0	-2.0	4.0	4.0
225°	38	30		26	31	7.0	-1.0	4.0	-5.0
270°	38	30		25	31	7.0	-1.0	5.0	-6.0
315°	37.5	35		28	31	6.5	0.5	7.0	-6.0
360°	37.5	37.5		33	31	6.5	0.5	4.5	-0.5

CONCENTRICITY ERROR = 1/2 MAX. DIFFERENCE OF PAIRS OF JOURNAL/COUPLING READINGS 180° APART.

JOURNAL CONCENTRICITY ERROR = 1 X .0001"

COUPLING CONCENTRICITY ERROR = 3 X .0001"

RECORD SHEET CP02/001 Page No. 8.5

Title HP/IP COUPLED ROTORS CONCENTRICITY

Contract INTERMOUNTAIN Unit No. 2 Serial No. 11245

Site Issue A Date 15/2/02 Checked BI Check List No. 1132

Taken by DRL Date 26/3/02 Supervisor Date Approved B. Hyde Date 26/3/0

ALL READINGS ARE 0.0001"

ANGULAR POSITION DEGREES/BOLT HOLES	ROTOR [HP]			ROTOR [IP]		CALCULATION			
	JOURNAL (Ja)	COUPLING (Ca)		COUPLING (Cb)	JOURNAL (Jb)	Ja -Jb		Ca - Cb	
0°	24.5	39		39	32.5	-8.0	——	0.0	——
45°	24.5	41		44	29.5	-5.0	——	-3.0	——
90°	25	41		45	24	1.0	——	-4.0	——
135°	24	32		39	21.5	2.5	——	-7.0	——
180°	25	28		31	23	2.0	-10.0	-3.0	3.0
225°	24.5	27		30	25.5	-1.0	-4.0	-3.0	0.0
270°	24.5	29		29	30.5	-6.0	7.0	0.0	-4.0
315°	25.5	31		31	32.5	-7.0	9.5	0.0	-7.0
360°	25.5	37		38	32	-6.5	8.5	-1.0	-2.0

CONCENTRICITY ERROR = 1/2 MAX. DIFFERENCE OF PAIRS OF JOURNAL/COUPLING READINGS 180° APART.

JOURNAL CONCENTRICITY ERROR = 5 X .0001"

COUPLING CONCENTRICITY ERROR = 3½ X .0001"

RECORD SHEET CP03/003 Page No. 8.6

Title COUPLING BOLT/SLEEVE DATA (HYDRAULIC BOLTS)

Contract INTERMOUNTAIN Unit No. 2 Serial No. 11245

Site Issue A Date 13/02/02 Checked BI Check List No. 1132

Taken by CFS Date 19/3/02 Supervisor Date Approved B Hugle Date 26/3/02

COUPLING HP / IP

NOMINAL BOLT SIZE

Readings in inches

HOLE NUMBER		BOLT HOLE FINAL SIZE			SLEEVE DIAMETER (MEAN)	DIAMETRAL CLEARANCE	
HP COUPLING	ORIGINAL HP ROTOR	MIN	MAX	MEAN		MIN	MAX
1	M	2.6249	2.6252	2.6250	2.6215	.0034	.0037
2	3	2.6258	2.6261	2.626	2.6225	.0033	.0036
3	5	2.600	2.6005	2.6002	2.597	.0030	.0035
4	7	2.6035	2.604	2.6037	2.600	.0035	.0040
5	9	2.610	2.6103	2.6101	2.607	.0030	.0033
6	11	2.599	2.5995	2.5993	2.596	.0030	.0035
7	13	2.6015	2.602	2.6017	2.599	.0025	.0030
8	2	2.597	2.5975	2.5972	2.594	.0030	.0035
9	14	2.632	2.6323	2.632	2.6285	.0035	.0038
10	12	2.636	2.6363	2.636	2.633	.0030	.0033
11	10	2.6345	2.635	2.6347	2.632	.0025	.0030
12	8	2.6075	2.6078	2.6077	2.604	.0035	.0038
13	6	2.628	2.6283	2.6281	2.625	.0030	.0033
14	4	2.634	2.6346	2.6343	2.631	.0030	.0036
					SLEEVE DES CLRC = .0028/.0043		

NOTE:- IPSC MARKED THE IP COUPLING AND THE BOLT ASSEMBLIES WITH THE WITH THE SAME I.D. AS THE HP COUPLING.

Title HYDRAULIC COUPLING BOLT TIGHTENING CHECKS AND STRETCH

Contract INTERMOUNTAIN Unit No. 2 Serial No. 11245

Site Issue A Date 13/02/02 Checked BI Check List No. 1132

Taken by Date Supervisor Date Approved Date

COUPLING HP / IP

EXPANSION PRESS.= Bar psi TENSIONING PRESS.= Bar psi NOMINAL BOLT SIZE =

Readings in inches

BOLT NO.	BOLT TIGHTENING CHECKS				BOLT EXTENSION		
	SLEEVE EXPANDED	FRONT NUT TIGHTENED	FRONT NUT RETIGHTENED	REAR NUT TIGHTENED	BOLT FREE LENGTH	TIGHTENED LENGTH	BOLT EXTENSION
1	Records with IPSC/MD&A						
2							
3							
4							
5							
6							
7							
8							
9							
10							
11							
12							
13							
14							

RECORD SHEET **CP02/005** Page No. **8.8**

Title	**HP ROTOR STUBSHAFT CONCENTRICITY CHECKS**						
Contract	**INTERMOUNTIAN**			Unit No.	**2**	Serial No.	**11245**
Site Issue	**A**	Date	**13/02/02**	Checked	**BI**	Check List No.	**1132**
Taken by	Date	Supervisor		Date	Approved		Date

MAIN OIL PUMP **HP ROTOR**

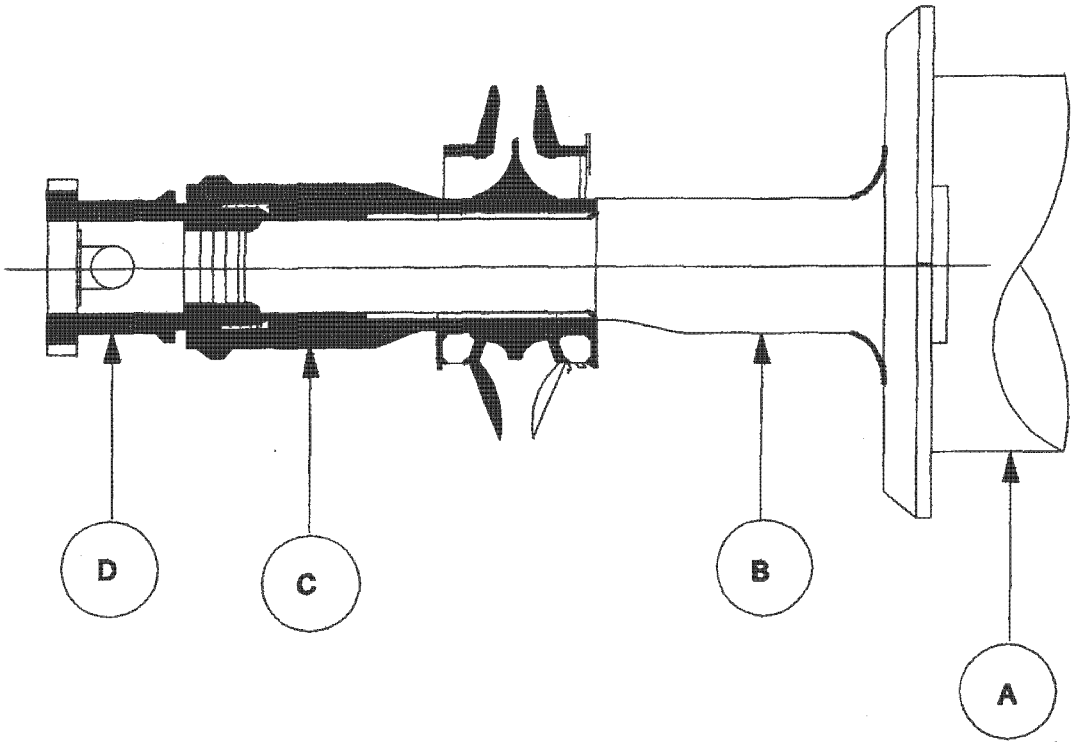

Readings are 0.0001"

ANGLE POSITION DEG	INDICATOR CLOCK READINGS					
	CLOCK 'D'	CLOCK 'C'	CLOCK 'B'	CLOCK "A"	C - A	
0						
45						
90		RECORDS WITH IPSC/MD&A				
135						
180						
225						
270						
315						
360						

Servo Hydraulics • Inc

Final Test Data

Page : 1 of 4 Date: 3 | 16 | 02 USH Order : 7328

Customer : InterMountain Power PO: 02-24047

GE Valve ID : Control Valve # 1

Cylinder Type : Parker 2H Special

Bore :	7 inch	Rod Diameter :	3.5 inch
Stroke :	16 inch	Seal Material :	Viton
Extended Shaft Length :	52 inch	Retracted Shaft Length :	36 inch
GE Dump Valve Diam :	2.250 inch	Cyl. Tie Rod Torque :	500 ft-lbs
Dump Stem Tolerance :	Pass	Dump Tie Rod Torque :	500 ft-lbs
Test Pressure:	2000 psi	Cyl. Rod Orifice :	Pass
Pressure Test Duration :	20 minutes	Z Wire :	Pass
External Leakage :	Pass	ETS Pilot Orifice :	.030 inch
Internal Leakage :	.4-.5 gpm	Trip Action :	Pass

Special Notes :

The dump valve stem was measured, and met GE TIL #923-3. The operation and leakage looked good during the Final Test.

There was normal contamination in actuator assembly.

There was scoring and wear in all major actutor components.

Parts Replaced:

Item	Part Description	Qty	Failure
1	Gland	1	Heavy scoring on gland ID. Some indication of side load.
2	Piston Ring	4	Rings were scored.
3	All Elastomeric Seals	1	Normal Procedure.
4	Piston Head	1	Scoring.
5	Piston Rod	1	Scoring.
6	Cylinder Barrel	1	Scoring.

Additional Labor:

Item	Labor Description	Qty	Reason
1	Grind Dump Valve Seat	1	Some scoring and rough finish.

Mail To:
Post Office Box 1041
Waynesboro, VA 22980

TOLL FREE 1-800-447-0058
FAX 1-540-949-5653
www.unitedservo.com

Ship To:
200 12th Street
South River Complex
Waynesboro, VA 22980

Servo Hydraulics • Inc

Final Test Data

Page : 2 of 4 Date: 3 | 16 | 02 USH Order : 7328

Customer : InterMountain Power PO: 02-24047

GE Valve ID : Control Valve # 2

Cylinder Type : Parker 2H Special

Bore :	7 inch	Rod Diameter :	3.5 inch
Stroke :	16 inch	Seal Material :	Viton
Extended Shaft Length :	52 inch	Retracted Shaft Length :	36 inch
GE Dump Valve Diam :	2.250 inch	Cyl. Tie Rod Torque :	500 ft-lbs
Dump Stem Tolerance :	Pass	Dump Tie Rod Torque :	500 ft-lbs
Test Pressure:	2000 psi	Cyl. Rod Orifice :	Pass
Pressure Test Duration :	20 minutes	Z Wire :	Pass
External Leakage :	Pass	ETS Pilot Orifice :	.030 inch
Internal Leakage :	.4-.5 gpm	Trip Action :	Pass

Special Notes :

The dump valve stem was measured, and met GE TIL #923-3. The operation and leakage looked good during the Final Test.

There was normal contamination in actuator assembly.

There was scoring and wear in all major actutor components.

Parts Replaced:

Item	Part Description	Qty	Failure
1	Gland	1	Heavy scoring on gland ID. Some indication of side load.
2	Piston Ring	4	Rings were scored.
3	All Elastomeric Seals	1	Normal Procedure.
4	Piston Head	1	Scoring.
5	Piston Rod	1	Scoring.
6	Cylinder Barrel	1	Scoring.

Additional Labor:

Item	Labor Description	Qty	Reason
1	Grind Dump Valve Seat	1	Some scoring and rough finish.

Mail To:
Post Office Box 1041
Waynesboro, VA 22980

TOLL FREE 1-800-447-0058
FAX 1-540-949-5653
www.unitedservo.com

Ship To:
200 12th Street
South River Complex
Waynesboro, VA 22980

Servo Hydraulics • Inc

Final Test Data

Page : 3 of 4 Date: 3 | 16 | 02 USH Order : 7328

Customer : InterMountain Power PO: 02-24047

GE Valve ID : Control Valve # 3

Cylinder Type : Parker 2H Special

Bore :	7 inch	Rod Diameter :	3.5 inch
Stroke :	16 inch	Seal Material :	Viton
Extended Shaft Length :	52 inch	Retracted Shaft Length :	36 inch
GE Dump Valve Diam :	2.250 inch	Cyl. Tie Rod Torque :	500 ft-lbs
Dump Stem Tolerance :	Pass	Dump Tie Rod Torque :	500 ft-lbs
Test Pressure:	2000 psi	Cyl. Rod Orifice :	Pass
Pressure Test Duration :	20 minutes	Z Wire :	Pass
External Leakage :	Pass	ETS Pilot Orifice :	.030 inch
Internal Leakage :	.4-.5 gpm	Trip Action :	Pass

Special Notes :

The dump valve stem was measured, and met GE TIL #923-3. The operation and leakage looked good during the Final Test.

There was normal contamination in actuator assembly.

There was scoring and wear in all major actutor components.

Parts Replaced:

Item	Part Description	Qty	Failure
1	Gland	1	Heavy scoring on gland ID. Some indication of side load.
2	Piston Ring	4	Rings were scored.
3	All Elastomeric Seals	1	Normal Procedure.
4	Piston Head	1	Scoring.
5	Piston Rod	1	Scoring.
6	Cylinder Barrel	1	Scoring.

Additional Labor:

Item	Labor Description	Qty	Reason
1	Grind Dump Valve Seat	1	Some scoring and rough finish.

Mail To:
Post Office Box 1041
Waynesboro, VA 22980

TOLL FREE 1-800-447-0058
FAX 1-540-949-5653
www.unitedservo.com

Ship To:
200 12th Street
South River Complex
Waynesboro, VA 22980

Servo HYDRAULICS • INC

Final Test Data

Page : 4 of 4 Date: 3 | 16 | 02 USH Order : 7328

Customer : InterMountain Power PO: 02-24047

GE Valve ID : Control Valve # 4

Cylinder Type : Parker 2H Special

Bore :	7 inch	Rod Diameter :	3.5 inch
Stroke :	16 inch	Seal Material :	Viton
Extended Shaft Length :	52 inch	Retracted Shaft Length :	36 inch
GE Dump Valve Diam :	2.250 inch	Cyl. Tie Rod Torque :	500 ft-lbs
Dump Stem Tolerance :	Pass	Dump Tie Rod Torque :	500 ft-lbs
Test Pressure:	2000 psi	Cyl. Rod Orifice :	Pass
Pressure Test Duration :	20 minutes	Z Wire :	Pass
External Leakage :	Pass	ETS Pilot Orifice :	.030 inch
Internal Leakage :	.4-.5 gpm	Trip Action :	Pass

Special Notes :

The dump valve stem was measured, and met GE TIL #923-3. The operation and leakage looked good during the Final Test.

There was normal contamination in actuator assembly.

There was scoring and wear in all major actutor components.

Parts Replaced:

Item	Part Description	Qty	Failure
1	Gland	1	Heavy scoring on gland ID. Some indication of side load.
2	Piston Ring	4	Rings were scored.
3	All Elastomeric Seals	1	Normal Procedure.
4	Piston Head	1	Scoring.
5	Piston Rod	1	Scoring.
6	Cylinder Barrel	1	Scoring.

Additional Labor:

Item	Labor Description	Qty	Reason
1	Grind Dump Valve Seat	1	Some scoring and rough finish.

Mail To:
Post Office Box 1041
Waynesboro, VA 22980

TOLL FREE 1-800-447-0058
FAX 1-540-949-5653
www.unitedservo.com

Ship To:
200 12th Street
South River Complex
Waynesboro, VA 22980

HYDRAULICS•INC

SERVICE REPORT

USH Order Number : 7328
Report Date : 3/18/02

COMPANY	: INTER MOUNTAIN POWER #2173	MFR	: ABEX
		Model#	: 450-1635
PO#	: 02-24047	Serial#	: 195

VALVE SPECIFICATIONS

Rated Flow	:	GPM	Operating Press.	:	PSI
Rated Signal	:	mA	Null Bias	:	mA
O-Rings	: VITON		Coil Resistance	: /	ohms

INCOMING REPORT

Performed Inc. Test	:		Valve Responsive	:	
Internal Leakage	:	GPM	Null Bias	:	mA
Actual Flow	:	GPM			

Comments:

FINAL TEST

Flow	: 68.8	GPM	Internal Leakage	: 0.82	GPM @ 1600 PSI
	@ 8.5	mA			
Final Null Bias	: +.51	mA	Coil Resistance	: 502 / 503	ohms

Mail To:
Post Office Box 1041
Waynesboro, VA 22980

TOLL FREE 1-800-447-0058
FAX 1-540-949-5653
www.unitedservo.com

Ship To:
200 12th Street
South River Complex
Waynesboro, VA 22980

Servo HYDRAULICS•INC

SERVICE REPORT

USH Order Number : 7328
Report Date : 3/18/02

MODEL # : 450-1635
SERIAL # : 195

FILTER/STRAINER CONDITION

CONTAMINATED

VALVE CONDITION

CONTAMINATED/DEPOSIT RINGS IN BUSHING

PARTS REPLACED

Part No.	Qty.	Description	Failure
A4009	1	STRAINER	CONTAMINATED
A70D-V		ORINGS	PROCEDURE
450-EC	1	ELECT CONNECTOR	CORRODED

LABOR PERFORMED

CALIBRATE	X	
CLEANING	X	
1st STAGE MINOR	X	SOLDER CONN
1st STAGE INTERMEDIATE		
1st STAGE MAJOR		
2nd STAGE MINOR		
2nd STAGE INTERMEDIATE	X	HONE BUSHING
2nd STAGE MAJOR		
TIE WIRE		
EXPEDITE		
TEST ONLY		
WARRANTY		

Mail To:
Post Office Box 1041
Waynesboro, VA 22980

TOLL FREE 1-800-447-0058
FAX 1-540-949-5653
www.unitedservo.com

Ship To:
200 12th Street
South River Complex
Waynesboro, VA 22980

Servo HYDRAULICS•INC

SERVICE REPORT

USH Order Number : 7328
Report Date : 3/18/02

COMPANY	: INTER MOUNTAIN POWER #2173	MFR	: ABEX
		Model#	: 450-1635
PO#	: 02-24047	Serial#	: 381

VALVE SPECIFICATIONS

Rated Flow	:	GPM	Operating Press.	:			PSI
Rated Signal	:	mA	Null Bias	:			mA
O-Rings	: VITON		Coil Resistance	:		/	ohms

INCOMING REPORT

Performed Inc. Test	:		Valve Responsive	:	
Internal Leakage	:	GPM	Null Bias	:	mA
Actual Flow	:	GPM			

Comments:

FINAL TEST

Flow	: 67.2	GPM	Internal Leakage	: 0.52				GPM @ 1600	PSI
	@ 8.5	mA							
Final Null Bias	: +.51	mA	Coil Resistance	:	476	/	480	ohms	

Mail To:
Post Office Box 1041
Waynesboro, VA 22980

TOLL FREE 1-800-447-0058
FAX 1-540-949-5653
www.unitedservo.com

Ship To:
200 12th Street
South River Complex
Waynesboro, VA 22980

Servo Hydraulics • Inc

SERVICE REPORT

USH Order Number : 7328
Report Date : 3/18/02

MODEL # : 450-1635
SERIAL # : 381

FILTER/STRAINER CONDITION

CONTAMINATED

VALVE CONDITION

CONTAMINATED/DEPOSIT RINGS IN BUSHING

PARTS REPLACED

Part No.	Qty.	Description	Failure
A4009	1	STRAINER	CONTAMINATED
A70D-V		ORINGS	PROCEDURE

LABOR PERFORMED

CALIBRATE	X	
CLEANING	X	
1st STAGE MINOR		
1st STAGE INTERMEDIATE		
1st STAGE MAJOR		
2nd STAGE MINOR		
2nd STAGE INTERMEDIATE	X	HONE BUSHING
2nd STAGE MAJOR		
TIE WIRE		
EXPEDITE		
TEST ONLY		
WARRANTY		

Mail To:
Post Office Box 1041
Waynesboro, VA 22980

TOLL FREE 1-800-447-0058
FAX 1-540-949-5653
www.unitedservo.com

Ship To:
200 12th Street
South River Complex
Waynesboro, VA 22980

Servo HYDRAULICS•INC

SERVICE REPORT

USH Order Number : 7328
Report Date : 3/18/02

COMPANY	: INTER MOUNTAIN POWER #2173	MFR	: ABEX
		Model#	: 450-1635
PO#	: 02-24047	Serial#	: 190

VALVE SPECIFICATIONS

Rated Flow	:	GPM	Operating Press.	:			PSI
Rated Signal	:	mA	Null Bias	:			mA
O-Rings	: VITON		Coil Resistance	:		/	ohms

INCOMING REPORT

Performed Inc. Test	:		Valve Responsive	:	
Internal Leakage	:	GPM	Null Bias	:	mA
Actual Flow	:	GPM			

Comments:

FINAL TEST

Flow	: 64	GPM	Internal Leakage	: 0.72				GPM @ 1600	PSI
	@ 8.5	mA							
Final Null Bias	: +.55	mA	Coil Resistance	:	491	/	490	ohms	

Mail To:
Post Office Box 1041
Waynesboro, VA 22980

TOLL FREE 1-800-447-0058
FAX 1-540-949-5653
www.unitedservo.com

Ship To:
200 12th Street
South River Complex
Waynesboro, VA 22980

Servo Hydraulics • Inc

SERVICE REPORT

USH Order Number : 7328
Report Date : 3/18/02

MODEL # : 450-1635
SERIAL # : 190

FILTER/STRAINER CONDITION

CONTAMINATED

VALVE CONDITION

CONTAMINATED/DEPOSIT RINGS IN BUSHING

PARTS REPLACED

Part No.	Qty.	Description	Failure
A4009	1	STRAINER	CONTAMINATED
A70D-V		ORINGS	PROCEDURE

LABOR PERFORMED

CALIBRATE	X	
CLEANING	X	
1st STAGE MINOR		
1st STAGE INTERMEDIATE		
1st STAGE MAJOR		
2nd STAGE MINOR		
2nd STAGE INTERMEDIATE	X	HONE BUSHING
2nd STAGE MAJOR		
TIE WIRE		
EXPEDITE		
TEST ONLY		
WARRANTY		

Mail To:
Post Office Box 1041
Waynesboro, VA 22980

TOLL FREE 1-800-447-0058
FAX 1-540-949-5653
www.unitedservo.com

Ship To:
200 12th Street
South River Complex
Waynesboro, VA 22980

Servo Hydraulics • Inc

SERVICE REPORT

USH Order Number : 7328
Report Date : 3/18/02

COMPANY	: INTER MOUNTAIN POWER #2173	MFR	: ABEX
		Model#	: 450-1635
PO#	: 02-24047	Serial#	: 197

VALVE SPECIFICATIONS

Rated Flow	:	GPM	Operating Press.	:			PSI
Rated Signal	:	mA	Null Bias	:			mA
O-Rings	: VITON		Coil Resistance	:		/	ohms

INCOMING REPORT

Performed Inc. Test	:		Valve Responsive	:	
Internal Leakage	:	GPM	Null Bias	:	mA
Actual Flow	:	GPM			

Comments:

FINAL TEST

Flow	: 64	GPM	Internal Leakage	: 0.85				GPM @	1600	PSI
	@ 8.5	mA								
Final Null Bias	: +.53	mA	Coil Resistance	:	502	/	504	ohms		

Mail To:
Post Office Box 1041
Waynesboro, VA 22980

TOLL FREE 1-800-447-0058
FAX 1-540-949-5653
www.unitedservo.com

Ship To:
200 12th Street
South River Complex
Waynesboro, VA 22980

Servo HYDRAULICS•INC

SERVICE REPORT

USH Order Number : 7328
Report Date : 3/18/02

MODEL # : 450-1635
SERIAL # : 197

FILTER/STRAINER CONDITION

CONTAMINATED

VALVE CONDITION

CONTAMINATED/DEPOSIT RINGS IN BUSHING

PARTS REPLACED

Part No.	Qty.	Description	Failure
A4009	1	STRAINER	CONTAMINATED
A70D-V		ORINGS	PROCEDURE

LABOR PERFORMED

CALIBRATE	X	
CLEANING	X	
1st STAGE MINOR		
1st STAGE INTERMEDIATE		
1st STAGE MAJOR		
2nd STAGE MINOR		
2nd STAGE INTERMEDIATE	X	HONE BUSHING
2nd STAGE MAJOR		
TIE WIRE		
EXPEDITE		
TEST ONLY		
WARRANTY		

Mail To:
Post Office Box 1041
Waynesboro, VA 22980

TOLL FREE 1-800-447-0058
FAX 1-540-949-5653
www.unitedservo.com

Ship To:
200 12th Street
South River Complex
Waynesboro, VA 22980

Servo HYDRAULICS • INC

SERVICE REPORT

USH Order Number : 7328
Report Date : 3/18/02

COMPANY	: INTER MOUNTAIN POWER #2173	MFR	: PARKER
		Model#	: D3W4BVY14
PO#	: 02-24047	Serial#	: CT7

VALVE SPECIFICATIONS

Rated Flow	:	GPM	Operating Press.	:		PSI
Rated Signal	:	mA	Null Bias	:		mA
O-Rings	: VITON		Coil Resistance	:	/	ohms

INCOMING REPORT

Performed Inc. Test	:		Valve Responsive	:	
Internal Leakage	:	GPM	Null Bias	:	mA
Actual Flow	:	GPM			

Comments:

FINAL TEST

Flow	:	GPM	Internal Leakage	: 0	GPM @ 2000	PSI
	@	mA				
Final Null Bias	:	mA	Coil Resistance	: 11.6	ohms	

Mail To:
Post Office Box 1041
Waynesboro, VA 22980

TOLL FREE 1-800-447-0058
FAX 1-540-949-5653
www.unitedservo.com

Ship To:
200 12th Street
South River Complex
Waynesboro, VA 22980

IP7007142

Servo HYDRAULICS•INC

SERVICE REPORT

USH Order Number : 7328
Report Date : 3/18/02

MODEL # : D3W4BVY14
SERIAL # : CT7

FILTER/STRAINER CONDITION

VALVE CONTAINS NO FILTER

VALVE CONDITION

CONTAMINATED

PARTS REPLACED

Part No.	Qty.	Description	Failure
OB-70D-V		ORINGS	PROCEDURE

LABOR PERFORMED

CALIBRATE	X
CLEANING	X
1st STAGE MINOR	
1st STAGE INTERMEDIATE	
1st STAGE MAJOR	
2nd STAGE MINOR	
2nd STAGE INTERMEDIATE	
2nd STAGE MAJOR	
TIE WIRE	
EXPEDITE	
TEST ONLY	
WARRANTY	

Mail To:
Post Office Box 1041
Waynesboro, VA 22980

TOLL FREE 1-800-447-0058
FAX 1-540-949-5653
www.unitedservo.com

Ship To:
200 12th Street
South River Complex
Waynesboro, VA 22980

Servo HYDRAULICS•INC

SERVICE REPORT

USH Order Number : 7328
Report Date : 3/18/02

COMPANY	: INTER MOUNTAIN POWER #2173	MFR	: PARKER
		Model#	: D3W4BVY14
PO#	: 02-24047	Serial#	: GT

VALVE SPECIFICATIONS

Rated Flow	:	GPM	Operating Press.	:		PSI
Rated Signal	:	mA	Null Bias	:		mA
O-Rings	: VITON		Coil Resistance	:	/	ohms

INCOMING REPORT

Performed Inc. Test	:		Valve Responsive	:	
Internal Leakage	:	GPM	Null Bias	:	mA
Actual Flow	:	GPM			

Comments:

FINAL TEST

Flow	:	GPM	Internal Leakage	: 0	GPM @ 2000 PSI
	@	mA			
Final Null Bias	:	mA	Coil Resistance	: 11.9	ohms

Mail To:
Post Office Box 1041
Waynesboro, VA 22980

TOLL FREE 1-800-447-0058
FAX 1-540-949-5653
www.unitedservo.com

Ship To:
200 12th Street
South River Complex
Waynesboro, VA 22980

Servo HYDRAULICS • INC

SERVICE REPORT

USH Order Number : 7328
Report Date : 3/18/02

MODEL # : D3W4BVY14
SERIAL # : GT

FILTER/STRAINER CONDITION

VALVE CONTAINS NO FILTER

VALVE CONDITION

CONTAMINATED/BUSHING & SPOOL TIGHT

PARTS REPLACED

Part No.	Qty.	Description	Failure
OB-70D-V		ORINGS	PROCEDURE

LABOR PERFORMED

CALIBRATE	X
CLEANING	X
1st STAGE MINOR	
1st STAGE INTERMEDIATE	
1st STAGE MAJOR	
2nd STAGE MINOR	
2nd STAGE INTERMEDIATE	
2nd STAGE MAJOR	
TIE WIRE	
EXPEDITE	
TEST ONLY	
WARRANTY	

Mail To:
Post Office Box 1041
Waynesboro, VA 22980

TOLL FREE 1-800-447-0058
FAX 1-540-949-5653
www.unitedservo.com

Ship To:
200 12th Street
South River Complex
Waynesboro, VA 22980

Servo Hydraulics • Inc

SERVICE REPORT

USH Order Number : 7328
Report Date : 3/20/02

COMPANY	: INTERMOUNTAIN POWER	MFR	: PARKER
		Model#	: D3W
PO#	:	Serial#	: CT3

VALVE SPECIFICATIONS

Rated Flow	:	GPM	Operating Press.	:		PSI
Rated Signal	:	mA	Null Bias	:		mA
O-Rings	:		Coil Resistance	:	/	ohms

INCOMING REPORT

Performed Inc. Test	:			Valve Responsive		:	
Actual Flow	:	GPM	Cntr Shift:		Null Bias	:	mA
Internal Leakage	:	GPM	Hysteresis:		Threshold	:	

Comments:

FINAL TEST

Flow	:	GPM	Internal Leakage	: 0			GPM @ 2000	PSI
	@	mA						
Final Null Bias	:	mA	Coil Resistance	:	11.6	/	ohms	

Mail To:
Post Office Box 1041
Waynesboro, VA 22980

TOLL FREE 1-800-447-0058
FAX 1-540-949-5653
www.unitedservo.com

Ship To:
200 12th Street
South River Complex
Waynesboro, VA 22980

Servo HYDRAULICS • INC

SERVICE REPORT

USH Order Number : 7328
Report Date : 3/20/02

MODEL # : D3W
SERIAL # : CT3

FILTER/STRAINER CONDITION

NO FILTER

VALVE CONDITION

BUSHING AND SPOOL TIGHT

PARTS REPLACED

Part No.	Qty.	Description	Failure
OB-70D-V		O-RINGS	PROCEDURE

LABOR PERFORMED

CALIBRATE	X
CLEANING	X
1st STAGE MINOR	
1st STAGE INTERMEDIATE	
1st STAGE MAJOR	
2nd STAGE MINOR	
2nd STAGE INTERMEDIATE	
2nd STAGE MAJOR	
TIE WIRE	
EXPEDITE	
TEST ONLY	
WARRANTY	

Mail To:
Post Office Box 1041
Waynesboro, VA 22980

TOLL FREE 1-800-447-0058
FAX 1-540-949-5653
www.unitedservo.com

Ship To:
200 12th Street
South River Complex
Waynesboro, VA 22980

Servo HYDRAULICS • INC

SERVICE REPORT

USH Order Number : 7328
Report Date : 3/20/02

COMPANY	: INTERMOUNTAIN POWER	MFR	: PARKER
		Model#	: D3W
PO#	:	Serial#	: CT8

VALVE SPECIFICATIONS

Rated Flow	:	GPM	Operating Press.	:		PSI
Rated Signal	:	mA	Null Bias	:		mA
O-Rings	:		Coil Resistance	:	/	ohms

INCOMING REPORT

Performed Inc. Test	:			Valve Responsive	:		
Actual Flow	:	GPM	Cntr Shift:		Null Bias	:	mA
Internal Leakage	:	GPM	Hysteresis:		Threshold	:	

Comments:

FINAL TEST

Flow	:	GPM	Internal Leakage	: 0			GPM @ 2000	PSI
	@	mA						
Final Null Bias	:	mA	Coil Resistance	:	11.7	/	ohms	

Mail To:
Post Office Box 1041
Waynesboro, VA 22980

TOLL FREE 1-800-447-0058
FAX 1-540-949-5653
www.unitedservo.com

Ship To:
200 12th Street
South River Complex
Waynesboro, VA 22980

Servo HYDRAULICS • INC

SERVICE REPORT

USH Order Number : 7328
Report Date : 3/20/02

MODEL # : D3W
SERIAL # : CT8

FILTER/STRAINER CONDITION

NO FILTER

VALVE CONDITION

BUSHING AND SPOOL TIGHT

PARTS REPLACED

Part No.	Qty.	Description	Failure
OB-70D-V		O-RINGS	PROCEDURE

LABOR PERFORMED

CALIBRATE	X
CLEANING	X
1st STAGE MINOR	
1st STAGE INTERMEDIATE	
1st STAGE MAJOR	
2nd STAGE MINOR	
2nd STAGE INTERMEDIATE	
2nd STAGE MAJOR	
TIE WIRE	
EXPEDITE	
TEST ONLY	
WARRANTY	

Mail To:
Post Office Box 1041
Waynesboro, VA 22980

TOLL FREE 1-800-447-0058
FAX 1-540-949-5653
www.unitedservo.com

Ship To:
200 12th Street
South River Complex
Waynesboro, VA 22980

Servo HYDRAULICS•INC

SERVICE REPORT

USH Order Number : 7328
Report Date : 3/20/02

COMPANY	: INTERMOUNTAIN POWER	MFR	: GE
		Model#	: 843E
PO#	:	Serial#	: 1883

VALVE SPECIFICATIONS

Rated Flow	:	GPM	Operating Press.	:		PSI
Rated Signal	:	mA	Null Bias	:		mA
O-Rings	:		Coil Resistance	:	/	ohms

INCOMING REPORT

Performed Inc. Test	:			Valve Responsive		:	
Actual Flow	:	GPM	Cntr Shift:		Null Bias	:	mA
Internal Leakage	:	GPM	Hysteresis:		Threshold	:	

Comments:

FINAL TEST

Flow	:	GPM	Internal Leakage	: 0			GPM @ 2000	PSI
	@	mA						
Final Null Bias	:	mA	Coil Resistance	:	N/A	/	ohms	

Mail To:
Post Office Box 1041
Waynesboro, VA 22980

TOLL FREE 1-800-447-0058
FAX 1-540-949-5653
www.unitedservo.com

Ship To:
200 12th Street
South River Complex
Waynesboro, VA 22980

Servo HYDRAULICS•INC

SERVICE REPORT

USH Order Number : 7328
Report Date : 3/20/02

MODEL # : 843E
SERIAL # : 1883

FILTER/STRAINER CONDITION

NO FILTER

VALVE CONDITION

PARTS REPLACED

Part No.	Qty.	Description	Failure
OB-7000		O-RINGS	PROCEDURE

LABOR PERFORMED

CALIBRATE	X
CLEANING	X
1st STAGE MINOR	
1st STAGE INTERMEDIATE	
1st STAGE MAJOR	
2nd STAGE MINOR	
2nd STAGE INTERMEDIATE	
2nd STAGE MAJOR	
TIE WIRE	
EXPEDITE	
TEST ONLY	
WARRANTY	

Mail To:
Post Office Box 1041
Waynesboro, VA 22980

TOLL FREE 1-800-447-0058
FAX 1-540-949-5653
www.unitedservo.com

Ship To:
200 12th Street
South River Complex
Waynesboro, VA 22980

Servo Hydraulics • Inc

SERVICE REPORT

USH Order Number : 7328
Report Date : 3/20/02

COMPANY	: INTERMOUNTAIN POWER	MFR	: GE
		Model#	: 843E
PO#	:	Serial#	: 1853

VALVE SPECIFICATIONS

Rated Flow	:	GPM	Operating Press.	:		PSI
Rated Signal	:	mA	Null Bias	:		mA
O-Rings	:		Coil Resistance	:	/	ohms

INCOMING REPORT

Performed Inc. Test	:			Valve Responsive		:	
Actual Flow	:	GPM	Cntr Shift:		Null Bias	:	mA
Internal Leakage	:	GPM	Hysteresis:		Threshold	:	

Comments:

FINAL TEST

Flow	:	GPM	Internal Leakage	: 0			GPM @ 2000	PSI
	@	mA						
Final Null Bias	:	mA	Coil Resistance	:	N/A	/	ohms	

Mail To:
Post Office Box 1041
Waynesboro, VA 22980

TOLL FREE 1-800-447-0058
FAX 1-540-949-5653
www.unitedservo.com

Ship To:
200 12th Street
South River Complex
Waynesboro, VA 22980

IP7007152

Servo HYDRAULICS•INC

SERVICE REPORT

USH Order Number : 7328
Report Date : 3/20/02

MODEL # : 843E
SERIAL # : 1853

FILTER/STRAINER CONDITION

NO FILTER

VALVE CONDITION

PARTS REPLACED

Part No.	Qty.	Description	Failure
OB-7000		O-RINGS	PROCEDURE

LABOR PERFORMED

CALIBRATE	X
CLEANING	X
1st STAGE MINOR	
1st STAGE INTERMEDIATE	
1st STAGE MAJOR	
2nd STAGE MINOR	
2nd STAGE INTERMEDIATE	
2nd STAGE MAJOR	
TIE WIRE	
EXPEDITE	
TEST ONLY	
WARRANTY	

Mail To:
Post Office Box 1041
Waynesboro, VA 22980

TOLL FREE 1-800-447-0058
FAX 1-540-949-5653
www.unitedservo.com

Ship To:
200 12th Street
South River Complex
Waynesboro, VA 22980

Servo Hydraulics • Inc

SERVICE REPORT

USH Order Number : 7328
Report Date : 3/20/02

COMPANY	: INTERMOUNTAIN POWER	MFR	: GE
		Model#	: 843E
PO#	:	Serial#	: 1862

VALVE SPECIFICATIONS

Rated Flow	:	GPM	Operating Press.	:		PSI
Rated Signal	:	mA	Null Bias	:		mA
O-Rings	:		Coil Resistance	:	/	ohms

INCOMING REPORT

Performed Inc. Test	:			Valve Responsive	:		
Actual Flow	:	GPM	Cntr Shift:		Null Bias	:	mA
Internal Leakage	:	GPM	Hysteresis:		Threshold	:	

Comments:

FINAL TEST

Flow	:	GPM	Internal Leakage	: 0			GPM @ 2000	PSI
	@	mA						
Final Null Bias	:	mA	Coil Resistance	:	N/A	/	ohms	

Mail To:
Post Office Box 1041
Waynesboro, VA 22980

TOLL FREE 1-800-447-0058
FAX 1-540-949-5653
www.unitedservo.com

Ship To:
200 12th Street
South River Complex
Waynesboro, VA 22980

IP7007154

Servo HYDRAULICS•INC

SERVICE REPORT

USH Order Number : 7328
Report Date : 3/20/02

MODEL # : 843E
SERIAL # : 1862

FILTER/STRAINER CONDITION

NO FILTER

VALVE CONDITION

PARTS REPLACED

Part No.	Qty.	Description	Failure
OB-7000		O-RINGS	PROCEDURE

LABOR PERFORMED

CALIBRATE	X
CLEANING	X
1st STAGE MINOR	
1st STAGE INTERMEDIATE	
1st STAGE MAJOR	
2nd STAGE MINOR	
2nd STAGE INTERMEDIATE	
2nd STAGE MAJOR	
TIE WIRE	
EXPEDITE	
TEST ONLY	
WARRANTY	

Mail To:
Post Office Box 1041
Waynesboro, VA 22980

TOLL FREE 1-800-447-0058
FAX 1-540-949-5653
www.unitedservo.com

Ship To:
200 12th Street
South River Complex
Waynesboro, VA 22980

Servo HYDRAULICS•INC

SERVICE REPORT

USH Order Number : 7328
Report Date : 3/20/02

COMPANY	: INTERMOUNTAIN POWER	MFR	: GE
		Model#	: 843E
PO#	:	Serial#	: 8204

VALVE SPECIFICATIONS

Rated Flow	:	GPM	Operating Press.	:		PSI
Rated Signal	:	mA	Null Bias	:		mA
O-Rings	:		Coil Resistance	:	/	ohms

INCOMING REPORT

Performed Inc. Test	:				Valve Responsive	:		
Actual Flow	:	GPM	Cntr Shift:			Null Bias	:	mA
Internal Leakage	:	GPM	Hysteresis:			Threshold	:	

Comments:

FINAL TEST

Flow	:	GPM	Internal Leakage	: 0			GPM @ 2000	PSI
	@	mA						
Final Null Bias	:	mA	Coil Resistance	:	N/A	/	ohms	

Mail To:
Post Office Box 1041
Waynesboro, VA 22980

TOLL FREE 1-800-447-0058
FAX 1-540-949-5653
www.unitedservo.com

Ship To:
200 12th Street
South River Complex
Waynesboro, VA 22980

IP7007156

Servo Hydraulics • Inc

SERVICE REPORT

USH Order Number : 7328
Report Date : 3/20/02

MODEL # : 843E
SERIAL # : 8204

FILTER/STRAINER CONDITION

NO FILTER

VALVE CONDITION

PARTS REPLACED

Part No.	Qty.	Description	Failure
OB-7000		O-RINGS	PROCEDURE

LABOR PERFORMED

CALIBRATE	X
CLEANING	X
1st STAGE MINOR	
1st STAGE INTERMEDIATE	
1st STAGE MAJOR	
2nd STAGE MINOR	
2nd STAGE INTERMEDIATE	
2nd STAGE MAJOR	
TIE WIRE	
EXPEDITE	
TEST ONLY	
WARRANTY	

Mail To:
Post Office Box 1041
Waynesboro, VA 22980

TOLL FREE 1-800-447-0058
FAX 1-540-949-5653
www.unitedservo.com

Ship To:
200 12th Street
South River Complex
Waynesboro, VA 22980

IP7007157

		TOPS OFF ---> TOPS ON SHIFTS						
		INTERMOUNTAIN POWER - UNIT #2						
			HP SECTION					
		Note -- +# For Hor = Right				Note -- +# For Vert = Up		
LOCATION	DISTANCE	HOR OFF	HOR ON	HOR SHIFT		VERT OFF	VERT ON	VERT SHIFT
T1 Bore	-11	20	18	-3		-25	-23	1
N1 G2	0	0	0	0		0	0	0
N1 G3	4	1	2	1		16	13	-4
N1 G4/5	16	1	1	0		13	6	-7
N1 G7	29	1	1	0		11	2	-9
8	44	-4	0	4		-12	-25	-13
5	70	-1	-1	-1		-6	-17	-10
2	105	3	2	-2		-6	-17	-11
Nozzle Bore	111	9	4	-5		-10	-20	-10
N2 G1	126	5	1	-4		-7	-15	-8
N2 G7	149	4	-1	-4		-6	-13	-8
N2 G8	153	2	3	1		-15	-15	0
N2 G9/10	160	1	3	2		-7	-7	-1
N2 G11	168	-1	1	1		-7	-5	1
N2 G13	179	0	0	0		0	0	0
OD 2	183	9	8	-1		-69	-83	-14
T2 Bore	192	5	6	1		-67	-81	-15

			INTERMOUNTAIN POWER - UNIT #2						
				HP FINAL ALIGNMENTS					
			IDEAL FINAL OFFSETS - 3/13/2002						
LOCATION	DIST.	HOR		1/2 Bear	Non - Cent	ELLIPT.	Off/On Shift	ROTOR	VERT
		IDEAL		Clear	OFFSET	OFFSET	OFFSET	SAG	IDEAL
N1 G2	0	0			0	0	0	0	0
N1 G3	4	-1			0	5	4	-1	8
N1 G4/5	16	0			0	4	7	-2	9
N1 G7	29	0			0	2	9	-3	8
8	44	-4			0	0	13	-5	8
5	70	1			0	0	10	-6	4
2	105	2			0	0	11	-6	5
Nozzle Bore	111	5			0	0	10	-6	4
N2 G1	126	4			0	0	8	-5	3
N2 G7	149	4			0	0	8	-3	5
N2 G8	153	-1			0	-10	0	-2	-12
N2 G9/10	160	-2			0	-6	1	-1	-6
N2 G11	168	-1			0	-7	-1	0	-8
N2 G13	179	0			0	0	0	0	0

* TT FINAL AS LEFT

			INTERMOUNTAIN POWER - UNIT #2							
			HP FINAL ALIGNMENTS							
				3/13/2002 4:00PM						
									Shim +	
					Note: + is Rt & Up				Means Add	
	LOCATION	DIST.	IDEAL		CORRECTED		SIDE	ELEV	SHIM	SHIM
			Hor	Vert	Hor	Vert	MOVE	MOVE	LEFT	RIGHT
	N1 G2	0	0	0	0	0	0	0	0	0
	N2 G13	179	0	0	0	0	0	0	0	0
Status										
	N1 G2	0	0	0	0	0	0	0	0	0
	N1 G3	4	-1	8	1	16	-2	-8	-10	-6
	N1 G4/5	16	0	9	1	13	-1	-4	-5	-2
	N1 G7	29	0	8	1	10	-1	-2	-4	-1
	8	44	-4	8	-7	0	3	8	12	5
	5	70	1	4	-3	2	4	2	6	-2
	2	105	2	5	1	-2	1	7	8	6
	Nozzle Bore	111	5	4	7	-6	-2	10	8	12
	N2 G1	126	4	3	3	0	1	3	4	2
	N2 G7	149	4	5	2	-1	2	6	9	4
	N2 G8	153	-1	-12	1	-17	-2	5	2	7
	N2 G9/10	160	-2	-6	1	-8	-3	2	-1	4
	N2 G11	168	-1	-8	-1	-8	0	0	0	0
	N2 G13	179	0	0	0	0	0	0	0	0

		TOPS OFF ---> TOPS ON SHIFTS						
		INTERMOUNTAIN POWER - UNIT #2						
			IP SECTION					
		Note -- +# For Hor = Right				Note -- +# For Vert = Up		
LOCATION	DISTANCE	HOR OFF	HOR ON	HOR SHIFT		VERT OFF	VERT ON	VERT SHIFT
T3 Bore	267	15	15	0		-51	-50	0
OD 3	272	17	16	0		-50	-50	1
N3 G1	277	0	0	0		0	0	0
N3 G2	285	12	12	0		-1	-4	-3
N3 G6	303	11	11	-1		-6	-10	-5
14T	314	3	4	1		12	8	-4
12T	329	10	6	-4		-4	-3	1
11T	336	19	17	-3		-11	-4	7
8T	366	5	3	-2		12	24	13
8G	372	4	2	-3		11	23	12
11G	402	-6	-9	-3		-25	-18	6
12G	409	-3	-4	-1		-1	1	1
14G	426	-3	-5	-2		0	-4	-4
N4 G1	434	4	7	3		-19	-25	-6
N4 G5	453	-5	-3	2		-12	-14	-2
N4 G6	460	0	0	0		0	0	0
OD 4	466	-6	-6	-1		31	34	2
T4 Bore	473	-4	-3	0		36	39	2

INTERMOUNTAIN POWER - UNIT #2

IP FINAL ALIGNMENTS

IDEAL FINAL OFFSETS - 3/13/2002

LOCATION	DIST.	HOR IDEAL		1/2 Bear Clear	Non - Cent OFFSET	ELLIPT. OFFSET	Off/On Shift OFFSET	ROTOR SAG	VERT IDEAL
N3 G1	277	0			0	0	0	0	0
N3 G2	285	0			0	-2	3	-1	0
N3 G6	303	1			0	3	5	-2	6
14T	314	-1			0	9	4	-3	10
13T	321	2			0	0	2	-4	-2
12T	329	4			0	0	-1	-5	-6
11T	336	3			0	2	-7	-6	-11
10T	344	2			0	1	-9	-6	-14
9T	352	2			0	5	-11	-7	-13
8T	366	2			0	7	-13	-7	-13
8G	372	3			0	7	-12	-7	-12
9G	386	3			0	7	-10	-7	-10
10G	395	3			0	4	-8	-6	-10
11G	402	3			0	4	-6	-6	-8
12G	409	1			0	0	-1	-5	-6
13G	418	1			0	-2	2	-4	-4
14G	426	2			0	0	4	-3	1
N4 G1	434	-3			0	-2	6	-2	2
N4 G5	453	-2			0	-1	2	-1	0
N4 G6	460	0			0	0	0	0	0

IP AS FOUND

			INTERMOUNTAIN POWER - UNIT #2							
			IP FINAL ALIGNMENTS							
				3/13/2002 11:00AM						
									Shim +	
					Note: + is Rt. & Up				Means Add	
	LOCATION	DIST.	IDEAL		CORRECTED		SIDE	ELEV	SHIM	SHIM
			Hor	Vert	Hor	Vert	MOVE	MOVE	LEFT	RIGHT
	N3 G1	277	0	0	0	0	0	0	0	0
	N4 G6	460	0	0	0	0	0	0	0	0
Status										
	N3 G1	277	0	0	0	0	0	0	0	0
	N3 G2	285	0	0	10	-3	-10	3	-7	13
	N3 G6	303	1	6	10	-7	-9	13	4	22
	14T	314	-1	10	6	10	-7	0	-6	7
	13T	321	2	-2	11	-1	-9	-1	-10	8
	12T	329	4	-6	9	-5	-5	-1	-6	4
	11T	336	3	-11	18	-12	-15	1	-15	16
	10T	344	2	-14	12	-2	-10	-12	-22	-2
	9T	352	2	-13	29	4	-27	-17	-45	10
	8T	366	2	-13	4	11	-2	-24	-26	-22
	8G	372	3	-12	4	11	-1	-23	-23	-22
	9G	386	3	-10	2	-3	1	-7	-6	-8
	10G	395	3	-10	20	-15	-17	5	-13	22
	11G	402	3	-8	-6	-25	9	17	27	8
	12G	409	1	-6	-3	-1	4	-5	-1	-9
	13G	418	1	-4	1	1	0	-5	-6	-5
	14G	426	2	1	-3	0	5	1	7	-4
	N4 G1	434	-3	2	4	-19	-7	21	14	28
	N4 G5	453	-2	0	-5	-12	3	12	16	9
	N4 G6	460	0	0	0	0	0	0	0	0

			INTERMOUNTAIN POWER - UNIT #2							
			IP FINAL ALIGNMENTS							
				3/14/2002 3:00PM						
									Shim +	
					Note: + is Rt & Up				Means Add	
	LOCATION	DIST.	IDEAL		CORRECTED		SIDE	ELEV	SHIM	SHIM
			Hor	Vert	Hor	Vert	MOVE	MOVE	LEFT	RIGHT
	N3 G1	277	0	0	0	0	0	0	0	0
	N4 G6	460	0	0	0	0	0	0	0	0
Status										
Done	N3 G1	277	0	0	0	0	0	0	0	0
Done	N3 G2	285	0	0	5	6	-5	-6	-10	-1
Done	N3 G6	303	1	6	1	4	0	2	2	3
Done	14T	314	-1	10	2	9	-3	1	-2	4
Done	13T	321	2	-2	3	1	-1	-3	-3	-2
Done	12T	329	4	-6	1	-7	3	1	4	-2
Done	11T	336	3	-11	5	-14	-2	3	1	5
Done	10T	344	2	-14	2	-14	0	0	0	0
Done	9T	352	2	-13	2	-16	0	3	2	3
Done	8T	366	2	-13	3	13	-1	-26	-27	-25
Done	8G	372	3	-12	3	12	0	-24	-24	-24
Done	9G	386	3	-10	6	-7	-3	-3	-5	0
Done	10G	395	3	-10	3	-11	0	1	2	1
Done	11G	402	3	-8	3	-10	0	2	2	2
Done	12G	409	1	-6	1	-7	0	1	1	2
Done	13G	418	1	-4	0	-4	1	0	2	-1
Done	14G	426	2	1	-1	2	3	-1	1	-4
Done	N4 G1	434	-3	2	1	-3	-4	5	1	9
Done	N4 G5	453	-2	0	-7	2	5	-2	2	-7
Done	N4 G6	460	0	0	0	0	0	0	0	0

TO: Brian Reed - MDOA
Barry Ingle - Alstom
FROM: Martin Morris - Laser Measurement Services
RE: Final Rotor Positions

Listed below are the changes in position of the bolt-on Packing Cases, in relation to the adjacent Bearing Bores, between the unbolted / on building keys condition and the fully bolted / on running keys condition:

HP

N1 G1: After bolting and transferring to running keys the bore moves **Right .002** and **Down .003**.

N2 G13: After bolting and transferring to running keys the bore moves **Right .002** and **Up .020**.

IP

N3 G1: After bolting and transferring to running keys the bore moves **Right .002** and **Down .001**.

N4 G6: After bolting and transferring to running keys the bore moves **No Horizontal Change** and **Up .001**.

Intermountain Power Plant
Delta, Utah

March, 2002, Overhaul

IP Section Turbine Repairs

And Future Recommendations

By Ted Archibald
Mechanical Dynamics & Analysis

IP Section Observations and Recommendations - by Ted Archibald

General Comments:
This IP section was found to be in very good condition. The only unusual significant damage was to the 8th stages, which is attributed to valve screens breaking up and getting into the steam path. The 8th stage double flow diaphragm will be replaced with a spare that has been repaired and HVOC coated. The other IP diaphragms only require "minor" repairs, which are described in more detail in following pages.
The 8th stage buckets on the rotor have damage to their leading edges (also from the valve screen failure), but it does not appear to be serious damage (as observed before NDE inspection). However, edge benching, dressing and polishing will be required of all buckets. Due to other observed SPE of these 8th stage bucket tips (outer 1/3 of vane length under the covers), and SPE of the tenons and fox-holed covers (at the OD), along with expected normal continuing SPE wear, it is recommended that these two rows of buckets be replaced at the next outage. Also, it is recommended that these new buckets be HVOC coated, which should greatly extend their life. If ordered before the next outage, so that all parts are in stock, the replacement and necessary machining should only take about (8) days.
Other less significant findings are presented in following pages.

Recommended Repairs For The Next Major Overhaul:
From wear measurements taken on the IP diaphragm partitions, it is expected that at the next turbine overhaul, "major" partition repairs will be required on both 9th and both 10th stages (eight halves). Other "selected" partition weld repairs will likely be required on the 11th and 14th stages. The 8th stage DF diaphragm, with it's HVOC steam path coating, should not require much repair. The above expected diaphragm repairs is estimated to take 1,500 hours, and include (10) technicians for (15) days. Considering labor, travel time, T&L expenses, materials, consumables, and freight charges, an estimate of cost for these repairs is $160,000.
Replacement of the 8th stage buckets should cost about $45,000 (excluding the price of the new parts) for labor, travel time, expenses, freight, and portable lathe rental. Engineering support cost for two weeks is estimated at $28,000.The above costs are based on current prices, so some adjustments will be required.

Diaphragm Observations and Measurements:

8th Stage DF - If the screen damage is factored out of the total damage observed, then the SPE wear of this diaphragm would be within acceptable limits, and could likely be "minor" repaired. By installing the repaired and coated spare 8th DF diaphragm, and assuming the screen failure isn't repeated, then it is likely this diaphragm should hold up for two overhaul cycles. Information and measurements have been documented for the 8th DF that came out of this unit, so that it can be quoted for "major" repairs (see separate sheet with this info), and used as a spare for unit #1 overhaul next year.

9th Stage Diaphragms - Both 9T and 9G diaphragms have been previously 100% weld repaired using Inco 82 wire, with a ½ inch cutback. There has been some carryover of the valve screen damage to this stage, and some outer partition thinning, but the condition is still generally acceptable for another operating cycle. A few partitions were weld repaired because they were damaged beyond acceptable straightening and blending conditioning. For future reference, typical measurements were:

Throat @ Y = .423" Radial Height = 5.380" Est. Total Area = 218.5 sq. in.
Pitch @ Y = 1.480" No. Partitions = 48/half

- These two diaphragms will likely need "major" repairs at the next outage.

10th Stage Diaphragms - These 10T and 10G diaphragms have not been previously repaired, and are now showing thinning at the outer 1/3 length of the partitions. A few were too thin after benching, and thus needed weld repairs. When repaired, the entire partition was cut back and re-welded with Inco 82. For future reference, typical measurements were:

Throat @ Y = .583" Radial Height = 6.095" Est. Total Area = 270.0 sq. in.
Pitch @ Y = 1.890" No. Partitions = 38/half

- These two diaphragms will likely need "major repairs at the next outage

11th Stage Diaphragms - These two diaphragms have not been previously repaired, and just beginning to show some thinning at the outer edges. Benching was completed, but no weld repairs made. Future reference data is as follows:

Throat @ Y = .555" Radial Height = 6.900" Est. Total Area = 314.0 sq. in.
Pitch @ Y = 1.800" No. Partitions = 41/half

- These two 11th stage diaphragms should be acceptable without "major" repairs at the next outage, but it is likely that some selective weld repairs will be necessary due to further edge thinning.

12th Stage Diaphragms - Both of these diaphragms are in good condition, with very minimal wear. Minor edge straightening was completed, but no weld repairs were required. Future reference data is as follows:

Throat @ Y = .410" Radial Height = 7.690" Est. Total Area = 359.5 sq. in.
Pitch @ Y = 1.315" No. Partitions = 57/half

- These two 12th stage diaphragms should still be in good condition at the next outage, with only edge benching/polishing, and no weld repairs required.

13th Stage Diaphragms - Both of these diaphragms are in excellent condition with no measurable wear, nor no need for repair. Reference data is as follows:

Throat @ Y = .425" Radial Height = 8.875" Est. Total Area = 437.5 sq. in.
Pitch @ Y = 1.325" No. Partitions = 58/half

- These diaphragms should still be in good condition at the next outage with no (or very minimal) expected repairs.

14th Stage Diaphragms - These two diaphragms are in good condition, but with some thinning at the outer edges. No weld repairs were made, but some edge benching was completed. Reference data is as follows:

Throat @ Y = .450" Radial Height = 10.438" Est. Total Area = 535.5 sq. in.
Pitch @ Y = 1.390" No. Partitions = 57/half

- Further edge benching and some selective weld repairs at the outer edges will likely be required at the next overhaul.

Other IP Stationary Parts Observations:

1. The spill strip and packing rubbing and wear was as good as you could expect for this design IP section based on normal casing/diaphragm distortions, rotor movements, and SPE wear. Further, the valve screen failure significantly damaged the 8th and 9th spills. However, since IP section efficiency is very dependent on keeping the spills and packing in good condition, and the planned operating cycle is longer than five years, it is recommended that these parts be replaced at each overhaul.

2. The inner shells and packing heads appeared to be in excellent condition, with no significant repairs required. Typical IP turbine sections of this design show much more distortion and wear, but that is attributed to a lot more cyclic operation with many cold starts. Any erosion wear or NDE indications found should be documented to compare to findings at the next overhaul. The erosion wear I saw did not justify any repairs at this time.

3. Other findings will be well documented, with recommendations, by Brian Reid, MD&A's onsite technical advisor.

IP Rotor Observations and Recommendations:

After a NDE inspection was completed of the IP rotor, I visual inspected the rotor and found it to be in excellent condition. The only significant damage/wear was the admission side vane edges of the 8th stage buckets (from the valve screen failure). These edges will be benched to remove the thin wavy FOD material to get a new straight and uniform thick edge, and then polished to remove sharpness from the edge. This applies to both 8T and 8G stages. Also, lodged (screen material) pieces found between the cover segments of these stages will be removed. These stage buckets are showing enough wear at the tips, tenons, and covers such that another cycle of operation will probably show further wear that puts them in a "risk of failure" category. Therefore, I recommend new "coated" buckets, covers and other assembly hardware be purchased for the next overhaul.

Buckets and covers of stages 9T, 9G, 10T, 10G, 11T, 11G, 12T, 12G, 13T, 13G, 14T, and 14G all showed to have no appreciable SPE or FOD wear, and are in excellent condition. Notch block gap checks were made of these stages and found to be as follows:

9T	.007" TE	.010" GE	9G	.004" TE	.005" GE
10T	.005" TE	.007" GE	10G	.018" TE	.018" GE
11T	.012" TE	.016" GE	11G	.010" TE	.010" GE
12T	.010" TE	.011" GE	12G	.012" TE	.010" GE
13T	.004" TE	.009" GE	13G	.012" TE	.008" GE
14T	.009" TE	.008" GE	14G	.006" TE	.006" GE

In comparing to prior year notch block gap checks, there doesn't show anything of significant concern. The 10G gaps are somewhat larger than normal, but they were in the past also, and I see no other indication of steps at the cross keys or bucket lifting. The rotor runouts of .007" at the midspan are acceptable and less than most IP rotors. All in all, this IP rotor appears to be in excellent condition for its years of service.

MD&A technicians will complete all steampath work on March 11, 2002. You may want to keep one welder technician to help with the sizing of diaphragm crush pins and centering slots, or anything else found requiring weld repairs.

With regard to next year's overhaul of unit #1, I would expect similar "minor" type repairs. Therefore, scheduling (6) technicians (three per shift) for about (5) days should be sufficient.

If there are questions, or need for further information, regarding this IP section, you can contact me through the MD&A corporate office at 1-800-999-4632. I thank you for your confidence in having me return to your plant. It is a pleasure to work with people who maintain and operate this plant with such high quality standards.

Ted Archibald

Information for Repairing the 8th Stage Double Flow Diaphragm

No. of Partitions = 55/half/side
Radial Height = 5.125" (sampling)
Pitch @ Y = 1.285" (sampling)
Throat @ Y = .320" (sampling)

Note: These measurements were compared to the repaired spare 8th stage DF and found to be essentially identical.

* From the CRV valve screens breaking up and entering the steampath, there is some FOD to the outer sidewalls and outer setback face. It is estimated that 1/16" of material will have to be welded to these surfaces to restore to design.
* To restore original thickness and contour of the partitions, it will be required to cut back all partitions ¾" to get to about .140" cross section thickness.
* It is recommended that all welding material be Inco 82.
* The repair procedures and quality standards should conform to MD&A's latest specifications, and presented to the customer for review accordingly.
* The partitions, sidewalls, and setback faces should be coated with a high quality HVOC process. This may require that the throat readings are increased about .005" to be sure there is no closure of the steampath area after coating is complete. Since the customer may want the best coating available, that could include having GE apply their highly proven process. It is my opinion that the coating application for the spare was not the best quality I have seen, even after re-work by the coating vendor.
* Measurements for roundness and distortion need to be made prior to repairs, during repairs, after repairs, and finally after the coating process is complete. Complete area dimensions are required after all repairs AND again after coating.
* It is likely the sealing face insert will have to be removed, and the groove machined for installing a new sealing insert.
* Two new rows of spill strips (steel) will need to be purchased and installed. It is not expected that any spill strip groove repairs are necessary.
* Blasting and NDE inspection will be required before repairs, along with a completed dimensional inspection, to determine if any other repairs are required. A final NDE inspection is also required after all repairs (before coating). A report is required with all dimensional data described above.

Information and Recommendations for Future Replacement of 8th Stage Buckets

No. of buckets = 92 per row
Axial entry design
Vane length is approximately 5 3/16"
Vane width at bottom of vane is approximately 2 3/8" (to axial root fin)
Bucket pitch at wheel rim is approximately 1 1/4"
Total length of bucket (excluding tenon height) is approximately 7 3/8"
The dovetail length is about 1 3/16" (ID to OD). The dovetail pitches are about 7/16", 11/16" and 15/16" for inner, middle and outer. Then, the length from the dovetail OD to the bottom of the vane is approximately 1".
There are two tenons (being kidney shaped, one being roughly 3/8" x 1/2", and the other being roughly 3/4" x 5/16")
The covers are about 1/8" thick, and include a grouping of (4) buckets, being about 7 ½" long by 2" wide. The holes in the covers are "foxholed" to a depth of .060"

It is recommended that during next year's Unit #1 overhaul the 8th stage buckets be inspected and measured, per above, to verify that they are the same condition as Unit #2. Then, bucket manufacturers can be invited to come to the plant to accurately measure the buckets and covers for the purpose of quoting new parts for the next major overhauls. Included in the quote should be HVOC coating of these new buckets.

The concern about these buckets is that the vane tip admission edges (just under the covers) are thinning (mostly due to SPE), and could start V-notching, thus leading to a potential tip failure. At the same time, the tenons and covers are showing SPE wear at the OD, which could lead to cover lifting and/or tenon failure. In both situations, a bucket tip failure would cause a lot of damage downstream, and probably close up diaphragm partition edges to restrict steam flow (and thus section KW output). A good comparison can be made between both units after inspecting unit #1 during next year's overhaul, to determine if this recommendation would apply to both units.

FINAL REPORT

NONDESTRUCTIVE EXAMINATIONS

INTERMOUNTAIN POWER STATION UNIT-2 COMPONENTS

INTERMOUNTAIN POWER SERVICE CORP.

C6958 IPSC PO# 02-45545

April 19, 2002

Submitted to:

Mr. Kelly Cloward
Intermountain Power Service Corporation (IPSC)
850 W Brush Wellman Rd.
Delta, UT 84624-9546

By:

REINHART & ASSOCIATES, INC.
Nondestructive Evaluation Specialists & Engineering Analysis
P. O. Box 81545
Austin, TX 78708-1545

1. INTRODUCTION

Reinhart & Associates, Inc. (R&A), performed nondestructive examinations of the Intermountain Power Service Corp. Unit 2 IP turbine and valve components during the period of March 8 through March 15, 2002. The 875-MW unit was manufactured by General Electric. The NDE examinations performed on the turbine components consisted of VT, WFMT, penetrant (PT), and UT. The NDE examinations were performed to provide information on the current condition of the turbine components and suitability for future service.

2. EXAMINATION RESULTS – TURBINE COMPONENTS

2.1 IP Rotor

Performed visual and wet fluorescent magnetic particle examination on the IP rotor buckets, covers, tenons, packing lands, wheel faces, and wheel radius.

Visual examination revealed light impact damage on the leading edges and foreign material wedged under the shroud of stage #8

No other recordable indications noted.

The data sheets documenting the examinations are included in Attachments 1 and 3.

2.2 IP Section Diaphragms

Visual examination revealed light to heavy impact damage on #10 and #11.

Performed wet fluorescent magnetic particle examination on the upper and lower governor and turbine end stages 9 through 14 diaphragms.

Stage #10 revealed three indications on the outer ring.
Stage #12 revealed four blades with indications.
Stage #14 revealed three blades with indications

The data sheets documenting the examinations are included in Attachments 1 and 3.

2.3 IP Shells

Performed wet fluorescent magnetic particle examination on the upper and lower, inner IP shell fit areas. Performed WFMT on upper outer IP shell only.

No recordable indications noted.

FINAL REPORT

NONDESTRUCTIVE EXAMINATIONS

INTERMOUNTAIN POWER STATION UNIT-2 COMPONENTS

INTERMOUNTAIN POWER SERVICE CORP.

C6958 IPSC PO# 02-45545

April 27, 2002

Submitted to:

Mr. Kelly Cloward
Intermountain Power Service Corporation
Delta, UT 84624-9546

By:

REINHART & ASSOCIATES, INC.
Austin, TX 78708-1545

Approved by:

Eugene R. Reinhart
President

IP7007176

Reinhart & Associates, Inc. (R&A) makes no warranty or representation, either express or implied, with respect to the accuracy, completeness, usefulness, or reliability of the material performance and property data, drawings or other information furnished to R&A by Intermountain Power Service Corp. (Client), or any third party. R&A will not assume any consequential loss, cost or damage resulting from death, personal injuries (including, but not limited to, the right to be paid for loss of time, loss of service or attorney's fees and other expenses incurred), arising out of, or as a consequence of, the use or misuse of any data or other information resulting from the examination and/or analysis contained in this report. Acceptance of this report by the Client shall indicate agreement with the above statement.

IP7007177

EXECUTIVE SUMMARY

Reinhart & Associates, Inc. (R&A), performed nondestructive examinations of the Intermountain Power Service Corp. Unit 2 IP turbine and valve components during the period of March 8 through March 15, 2002. The 875-MW unit was manufactured by General Electric. The NDE examinations performed on the turbine components consisted of VT, WFMT, penetrant (PT), and UT. The NDE examinations were performed to provide information on the current condition of the turbine components and suitability for future service.

SUMMARY OF NDE RESULTS - TURBINE COMPONENTS

COMPONENT NAME	VT	MT	PT	UT	ATTACH.
IP Rotor	RI	NRI			A1 & A3
IP Diaphragms	RI	RI			A1 & A3
IP Shells and Bolting		NRI		NRI	A3 & A4
IP Packing Heads and Bolting		NRI			A3 & A4
HP Outer Shells and Bolting		NRI		NRI	A3 & A4
Control Valves			RI	NRI	A2 & A4
Main Stop Valves		RI		NRI	A3 & A4
Intercept Valves		NRI	NRI	NRI	A2, A3 & A4
Reheat Stop Valves		NRI	NRI	NRI	A2, A3 & A4
Bearings				NRI	A4
Coupling Bolts		NRI			A3

NRI = No Recordable Indications, RI = Recordable Indications, VT = Visual Testing, MT = Magnetic Particle Testing, PT = Penetrant Testing, UT = Ultrasonic Testing.

IP7007178

TABLE OF CONTENTS
(C6958)

COMPONENTS 3

EXECUTIVE SUMMARY 5

SUMMARY OF NDE RESULTS - TURBINE COMPONENTS 5

TABLE OF CONTENTS 6

2. EXAMINATION RESULTS – TURBINE COMPONENTS 7

2.1 IP Rotor 7
2.2 IP Section Diaphragms 7
2.3 IP Shells 7
2.4 IP Packing Heads 8
2.5 HP Outer Shells 8
2.6 Control Valves 8
2.7 Main Stop Valves 8
2.8 Intercept Valves 9
2.9 Reheat Stop Valves 9
2.10 Journal Bearings 10
2.11 Coupling Bolts 10

ATTACHMENT 1: VISUAL (VT) DATA SHEETS 11

ATTACHMENT 2: PENETRANT (PT) DATA SHEETS 12

ATTACHMENT 3: MAGNETIC PARTICLE (MT) DATA SHEETS 13

ATTACHMENT 4: ULTRASONIC (UT) DATA & CALIBRATION SHEETS 14

IP7007179

Performed ultrasonic examination of all IP Shell bolting.

No recordable indications noted.

The data sheets documenting the examinations are included in Attachments 3 and 4.

2.4 IP Packing Heads

Performed wet fluorescent magnetic particle examination the IP section packing heads.

No recordable indications noted.

Performed ultrasonic examination on all packing head bolting.

No recordable indications noted

The data sheets documenting the examinations are included in Attachments 3 and 4.

2.5 HP Outer Shells

Performed wet fluorescent magnetic particle examination on the upper and lower outer HP shell fit areas.

Performed ultrasonic examination of all HP Shell bolting.

No recordable indications noted

The data sheets documenting the examinations are included in Attachments 3 and 4.

2.6 Control Valves

Performed penetrant examination on the four control valve body seats

Control valves #2 and #4 revealed indications across the seat area.

Control valves #1 and # revealed no recordable indications.

Ultrasonic examination of control valves 1 thru 4 studs revealed no recordable indications

The data sheets documenting the examinations are included in Attachments 2 and 4.

2.7 Main Stop Valves

Performed wet fluorescent magnetic particle examination on the 1 thru 4 main stop valve screens. All four screens revealed indications in the welds around the screen.

Ultrasonic examination of main stop valves 1 thru 4 studs revealed no recordable indications

The data sheets documenting the examinations are included in Attachments 3 and 4.

2.8 Intercept Valves

The wet fluorescent magnetic particle examination of the valve disc seat surface revealed no recordable indications.

The penetrant examination of the valve seat inner casing revealed no recordable indications.

The penetrant examination of the valve stem and disk assembly revealed no recordable indications.

The ultrasonic examination of the valve stem revealed no recordable indications.

The wet fluorescent magnetic particle examination of the valve pressure seal head revealed no recordable indications.

The ultrasonic examination of the valve upper head studs revealed no recordable indications.

The wet fluorescent magnetic particle examination of the upper head gasket surface revealed no recordable indications.

The data sheets documenting the examinations are included in Attachments 2, 3 and 4.

2.9 Reheat Stop Valves

The wet fluorescent magnetic particle examination of the valve disc seat surface revealed no recordable indications.

The wet fluorescent magnetic particle examination of the valve casing revealed no recordable indications.

The penetrant examination of the valve seat inner casing revealed no recordable indications.

The penetrant examination of the valve stem and disk assembly revealed no recordable indications.

The ultrasonic examination of the valve stem revealed no recordable indications.

The wet fluorescent magnetic particle examination of the valve pressure seal head revealed no recordable indications.

The penetrant examination of the valve pressure seal head assembly revealed no recordable indications.

The ultrasonic examination of the valve lower pressure seal studs revealed no recordable indications.

The wet fluorescent magnetic particle examination of the upper head gasket surface revealed no recordable indications.

The wet fluorescent magnetic particle examination of the seal head gasket surface revealed no recordable indications.

The data sheets documenting the examinations are included in Attachments 2, 3, and 4.

2.10 Journal Bearings

Performed ultrasonic examination of the upper and lower bearing T1 thru T4 and T12, examined the upper half of T5 only.

No recordable indication noted.

The data sheets documenting the examinations are included in Attachments 4.

2.11 Coupling Bolts

Performed wet flourecent magnetic particle examination on the HP to IP and IP to LP coupling bolts.

No recordable indications noted.

The data sheets documenting the examinations are included in Attachments 4.

IP7007182

ATTACHMENT 1: VISUAL (VT) DATA SHEETS

C-6958

Turbine Components

IP7007183

& ASSOCIATES, INC.
NONDESTRUCTIVE EVALUATION SPECIALISTS
P.O. BOX 9602, SUITE 173
AUSTIN, TEXAS 78766
(512) 834-6911
FAX# (512) 834-1266

Customer: IPP
Date: 3/10/02
Examiner: R. Dwyer
R. Whitaker

VISUAL EXAMINATION REPORT

COMPONENT: Unit 2 IP Rotor

Generator End
Stage #8 - Light impact damage on the leading edges and foreign material wedged under the shroud.
Stage #9 - Foreign material wedged under the shroud
Stage #10 - Foreign material wedged under the shroud
Stage #11 - No recordable indications
Stage #12 - No recordable indications
Stage #13 - No recordable indications
Stage #14 - No recordable indications

Governor End
Stage #8 - Light impact damage on the leading edges and foreign material wedged under the shroud.
Stage #9 - Foreign material wedged under the shroud
Stage #10 - Foreign material wedged under the shroud
Stage #11 - No recordable indications
Stage #12 - No recordable indications
Stage #13 - No recordable indications
Stage #14 - No recordable indications

& ASSOCIATES, INC.
NONDESTRUCTIVE EVALUATION SPECIALISTS
P.O. BOX 9802, SUITE 173
AUSTIN, TEXAS 78766
(512) 834-8911
FAX# (512) 834-1266

Customer: IPP
Date: 3/6/02
Examiner: R. Dwyer
R. Whitaker

VISUAL EXAMINATION REPORT

COMPONENT: Unit 2 IP Rotor Diaphragms

Upper Gen. End
#9 - NRI
#10 - Light impact damage on the trailing edges
#11 - Light impact damage on the trailing edges
#12 - No Recordable Indications (NRI)
#13 - NRI
#14 - NRI

Lower Gen. End
#9 - NRI
#10 - NRI
#11 - Moderate impact damage on the trailing edges
#12 - NRI
#13 - NRI
#14 - NRI

Upper Turbine End
#9 - NRI
#10 - NRI
#11 - Moderate impact damage on the trailing edges
#12 - NRI
#13 - NRI
#14 - Showed indication on the left horizontal joint blade to inner ring weld attachment area

Lower Turbine End
#9 - NRI
#10 - NRI
#11 - NRI
#12 - NRI
#13 - NRI
#14 - NRI

ATTACHMENT 2: PENETRANT (PT) DATA SHEETS

C-6958

Turbine Components

IP7007186

REINHART
& ASSOCIATES, INC.
NONDESTRUCTIVE EVALUATION
SPECIALISTS
P.O BOX 9802, SUITE 303
AUSTIN, TEXAS 78766
(512) 834-8941 FAX# (512) 834-1266

LIQUID PENETRANT EXAMINATION RECORD

Project No.:	C6985	Site:	Intermountain Power Service Corp.			Date: 3/10/02	Time: N/A
System/Component:	Unit 2	Line/Subassembly:	Reheat Stop Valve			Identification:	Valve Stem and Disk Assembly of Valve #1 & #2
Examiner:	R. Dwyer	SNT Level:	II	Procedure:		Surface Finish:	As Found
Examiner:	R. Whitaker	SNT Level:	II	No.:	PT-803	Surface Temp.:	70 Deg
Examiner:		SNT Level:		Rev.:	1	Dwell Time:	15 Min.

Comments:

Cleaner/Remover:		Penetrant:		Developer:		Black Light:	
Brand:	Magnaflux	Brand:	Magnaflux	Brand:	Magnaflux	U.V. Lamp:	N/A
Type:	SKC-S	Type:	SKL-SP	Type:	SKD-S2	S/N:	N/A
Batch No.:	01L01K	Batch No.:	01K05K	Batch No.:	01M02K	Output:	N/A

Results:

Performed penetrant examination on the valve stem and disk assembly

No recordable indications noted

Reviewed By:	SNT Level:	Date:	Page of
[signature]	III	5/6/02	

FORM #603a - 1/25/96

IP7007187

REINHART
& ASSOCIATES, INC.
NONDESTRUCTIVE EVALUATION
SPECIALISTS
P.O BOX 9602, SUITE 303
AUSTIN, TEXAS 78766
(512) 834-8911 FAX# (512) 834-1268

LIQUID PENETRANT EXAMINATION RECORD

Project No.: C6985	Site: Intermountain Power Service Corp.				Date: 3/10/02	Time: N/A	
System/Component: Unit 2	Line/Subassembly: Intercept Valve				Identification: Valve Stem and Disk Assembly of Valve #1 & #2		
Examiner: R. Dwyer	SNT Level: II	Procedure:		Surface Finish: As Found	Comments:		
Examiner: R. Whitaker	SNT Level: II	No.: PT-803		Surface Temp.: 70 Deg			
Examiner:	SNT Level:	Rev.: 1		Dwell Time: 15 Min.			
Cleaner/Remover:	**Penetrant:**		**Developer:**		**Black Light:**		
Brand: Magnaflux	Brand: Magnaflux		Brand: Magnaflux		U.V. Lamp: N/A		
Type: SKC-S	Type: SKL-SP		Type: SKD-S2		S/N: N/A		
Batch No.: 01L01K	Batch No.: 01K05K		Batch No.: 01M02K		Output: N/A		

Results:

Performed penetrant examination on the valve stem and disk assembly

No recordable indications noted

Reviewed By:	SNT Level: III	Date: 5/6/02	Page of

FORM #603a - 1/25/96

IP7007188

REINHART
& ASSOCIATES, INC.
NONDESTRUCTIVE EVALUATION
SPECIALISTS
P.O BOX 9802, SUITE 303
AUSTIN, TEXAS 78766
(512) 834-8911 FAX# (512) 834-1266

LIQUID PENETRANT EXAMINATION RECORD

Project No.:	C6985	Site:	Intermountain Power Service Corp.			Date: 3/10/02	Time: N/A
System/Component:	Unit 2	Line/Subassembly:	Intercept Valve			Identification:	Valve Seat Inner Casing of Valve #1 & #2
Examiner:	R. Dwyer	SNT Level:	II	Procedure:		Surface Finish:	As Found
Examiner:	R. Whitaker	SNT Level:	II	No.:	PT-803	Surface Temp.:	70 Deg
Examiner:		SNT Level:		Rev.:	1	Dwell Time:	15 Min.

Comments:

Cleaner/Remover:		Penetrant:		Developer:		Black Light:	
Brand:	Magnaflux	Brand:	Magnaflux	Brand:	Magnaflux	U.V. Lamp:	N/A
Type:	SKC-S	Type:	SKL-SP	Type:	SKD-S2	S/N:	N/A
Batch No.:	01L01K	Batch No.:	01K05K	Batch No.:	01M02K	Output:	N/A

Results:

Performed penetrant examination on the valve seat inner casing

No recordable indications noted

Reviewed By:	SNT Level:	Date:	Page of
G M Reinhart	III	5/6/02	

FORM #603a - 1/25/96

IP7007189

REINHART
& ASSOCIATES, INC.
NONDESTRUCTIVE EVALUATION
SPECIALISTS
P.O BOX 9862, SUITE 303
AUSTIN, TEXAS 78766
(512) 834-8911 FAX# (512) 834-1266

LIQUID PENETRANT EXAMINATION RECORD

Project No.:	C6985	Site:	Intermountain Power Service Corp.			Date: 3/7/02	Time: N/A
System/Component:	Unit 2	Line/Subassembly:	Control Valves			Identification:	Valves 1,2,3,&4
Examiner:	R. Dwyer	SNT Level:	II	Procedure:		Surface Finish:	As Found
Examiner:	R. Whitaker	SNT Level:	II	No.:	PT-803	Surface Temp.:	70 Deg
Examiner:		SNT Level:		Rev.:	1	Dwell Time:	15 Min.

Comments:

Cleaner/Remover:		Penetrant:		Developer:		Black Light:	
Brand:	Magnaflux	Brand:	Magnaflux	Brand:	Magnaflux	U.V. Lamp:	N/A
Type:	SKC-S	Type:	SKL-SP	Type:	SKD-S2	S/N:	N/A
Batch No.:	01L01K	Batch No.:	01K05K	Batch No.:	01M02K	Output:	N/A

Results:

Performed penetrant examination on the #1, #2, #3, & #4 body seats

No recordable indications were noted on seats #1 & #3

2 indications were noted on valve seat #2

3 jindications were noted on valve seat #4

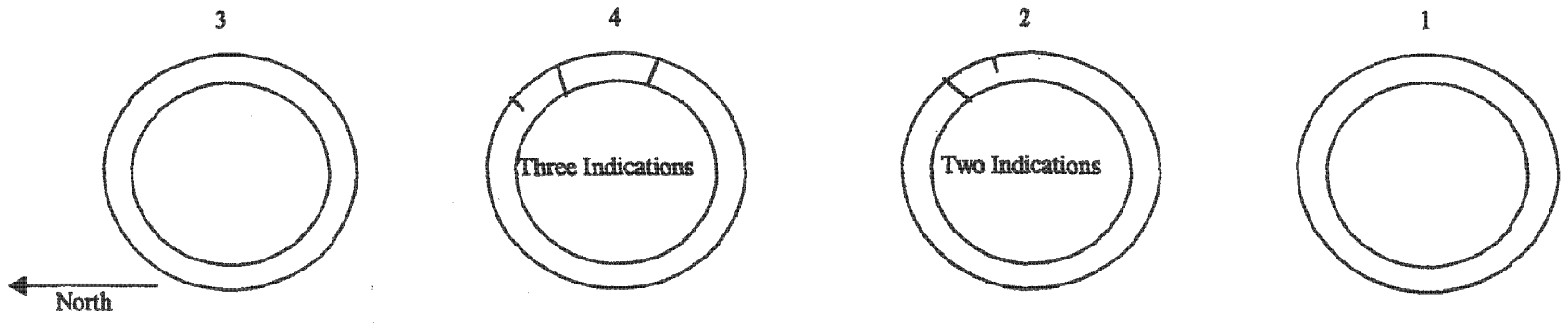

Reviewed By:	E [illegible]	SNT Level:	[illegible]	Date:	5/6/02	Page	of

FORM #603a - 1/25/96

IP7007190

REINHART
& ASSOCIATES, INC.
NONDESTRUCTIVE EVALUATION
SPECIALISTS
P.O BOX 9802, SUITE 303
AUSTIN, TEXAS 78766
(512) 834-8911 FAX# (512) 834-1266

MAGNETIC PARTICLE EXAMINATION RECORD

Project No.: C6958	Site: Intermountain Power Service Corp.	Date: 3/11/02	Time: N/A
Exam Area: Unit 2	Line/Subassembly: Stop Valves	Identification: 1,2,3 & 4 Stop Valve Screens	

Examiner: R. Dwyer	SNT Level: II	Procedure:	Material		Surface Finish: Sandblasted
Examiner: R. Whitaker	SNT Level: II	No.: MT-704	Brand: Magnuflux Type: 14 AM Prepared Bath Batch No.: 02A026		Surface Temp.: 65 Deg.
Examiner:	SNT Level:	Rev.: 2	Mixed With: N/A Batch No.: N/A		U.V. Lamp: ARDROX 1020

Material Application	Current Type	Magnetization		S/N:
Dusting [ ] Spraying [X] Flooding [ ]	AC [X] HWAC [ ] DC [ ]	Machine Type: ARDROX AX-600 YOKE Type of Conductor: N/A Current Level: N/A	Coil Dia.: N/A Prod. Spacing: 4 to 6 Inches	UV-007 Output: 800 mw/cm^2

Results:

Performed WFMT on stop valve screens 1,2,3,&4. Indications were noted in all four corners of the weld around the screen of all four screens

No other recordable indications were noted

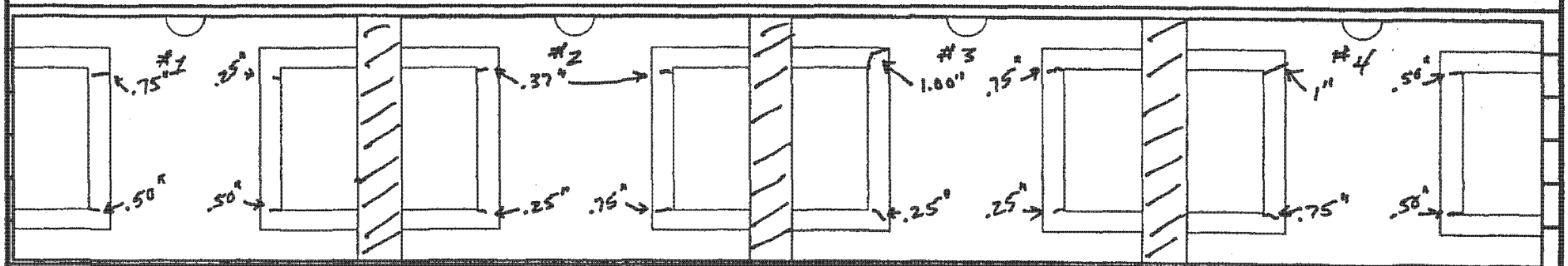

Reviewed By: CM	SNT Level: III	Date: 5/6/02	Page of

FORM #204 - 11/4/95

IP7007191

ATTACHMENT 3: MAGNETIC PARTICLE (MT) DATA SHEETS

C-6958

Turbine Components

IP7007192

REINHART
& ASSOCIATES, INC.
NONDESTRUCTIVE EVALUATION
SPECIALISTS
P.O BOX 9802, SUITE 303
AUSTIN, TEXAS 78766
(512) 834-8911 FAX# (512) 834-1266

MAGNETIC PARTICLE EXAMINATION RECORD

Project No.:	C6985	Site:	Intermountain Power Service Corp.			Date: 3/10/02	Time: N/A
Exam Area:	Unit 2	Line/Subassembly:	IP Rotor			Identification:	Stages 8-14 Gov. & Gen. End
Examiner:	R. Dwyer	SNT Level:	II	Procedure:	Material	Surface Finish:	Sandblasted
Examiner:	R. Whitaker	SNT Level:	II	No.: MT-707	Brand: Magnuflux Type: 14 AM Prepared Bath Batch No.: 02A026	Surface Temp.:	70 Deg.
Examiner:		SNT Level:		Rev.: 6	Mixed With: N/A Batch No.: N/A	U.V. Lamp:	ARDROX 1020
Material Application	Current Type	Magnetization				S/N:	UV-007
Dusting [ ] Spraying [X] Flooding [ ]	AC [ ] HWAC [ ] DC [X]	Machine Type: Magnuflux M530 S/N 95380 Type of Conductor: Draped Coil Current Level: 4500 Amp Turns			Coil Dia.: 48" Prod. Spacing: N/A	Output:	800 mw/cm^2

Results:

Performed WFMT on the IP Rotor stages 8 thru 14, gov. and gen. End buckets,covers, and tenons.

Also perfomed WFMT on the packing lands, wheel faces, and wheel radius

No recordable indications noted

Reviewed By:	E. A. Reinhart	SNT Level: II	Date: 3/16/02	Page of

FORM #204 - 11/4/95

IP7007193

REINHART
& ASSOCIATES, INC.
NONDESTRUCTIVE EVALUATION
SPECIALISTS
P.O BOX 9602, SUITE 303
AUSTIN, TEXAS 78766
(512) 834-8911 FAX# (512) 834-1266

MAGNETIC PARTICLE EXAMINATION RECORD

Project No.: C6985	Site: Intermountain Power Service Corp.			Date: 3/6/02	Time: N/A
Exam Area: Unit 2	Line/Subassembly: IP Rotor Diaphragm			Identification: Turbine End Upper & Lower #12	
Examiner: R. Dwyer	SNT Level: II	Procedure:	Material: Brand: Magnuflux		Surface Finish: Sandblasted
Examiner: R. Whitaker	SNT Level: II	No.: MT-707	Type: 14 AM Prepared Bath; Batch No.: 02A026		Surface Temp.: 70 Deg.
Examiner:	SNT Level:	Rev.: 6	Mixed With: N/A; Batch No.: N/A		U.V. Lamp: ARDROX 1020
Material Application: Dusting [ ]; Spraying [X]; Flooding [ ]	Current Type: AC [ ]; HWAC [ ]; DC [X]	Magnetization: Machine Type: Magnuflux M530 S/N 95380; Type of Conductor: Draped Coil; Current Level: 3000 Amp Turns	Coil Dia.: 48"; Prod. Spacing: N/A		S/N: UV-007; Output: 800 mw/cm^2

Results:

Indication was noted on the leading edge of blade at the out ring attachment area on blades #20, #22, #26, & #28

No recordable indications were noted on the lower half

Blades are numbered looking in the direction of flow starting on left side going CW

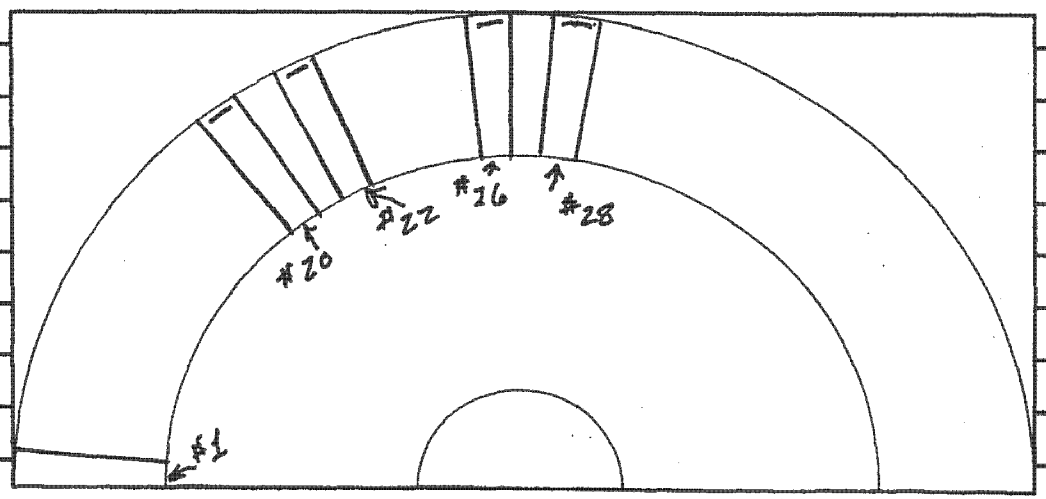

Reviewed By: [signature]	SNT Level: III	Date: 5/06/02	Page of

FORM #204 - 11/4/95

IP7007194

REINHART
& ASSOCIATES, INC.
NONDESTRUCTIVE EVALUATION
SPECIALISTS
P.O BOX 9002, SUITE 303
AUSTIN, TEXAS 78766
(512) 834-8911 FAX# (512) 834-1266

MAGNETIC PARTICLE EXAMINATION RECORD

Project No.: C6985	Site: Intermountain Power Service Corp.			Date: 3/6/02	Time: N/A
Exam Area: Unit 2	Line/Subassembly: IP Rotor Diaphragm			Identification: Gen. End Upper & lower #10	
Examiner: R. Dwyer	SNT Level: II	Procedure:	Material	Surface Finish: Sandblasted	
Examiner: R. Whitaker	SNT Level: II	No.: MT-707	Brand: Magnuflux Type: 14 AM Prepared Bath Batch No.: 02A026	Surface Temp.: 70 Deg.	
Examiner:	SNT Level:	Rev.: 6	Mixed With: N/A Batch No.: N/A	U.V. Lamp: ARDROX 1020	

Material Application	Current Type	Magnetization		S/N: UV-007
Dusting [ ] Spraying [X] Flooding [ ]	AC [ ] HWAC [ ] DC [X]	Machine Type: Magnuflux M530 S/N 95360 Type of Conductor: Draped Coil Current Level: 3000 Amp Turns	Coil Dia.: 48" Prod. Spacing: N/A	Output: 800 mw/cm^2

Results:

Indication was noted on the upper half outer ring adjacent to leading edge of blade # 2, #3, & #15

No recordable indications were noted on the lower half

Blades are numbered looking in the direction of flow starting on left side going CW

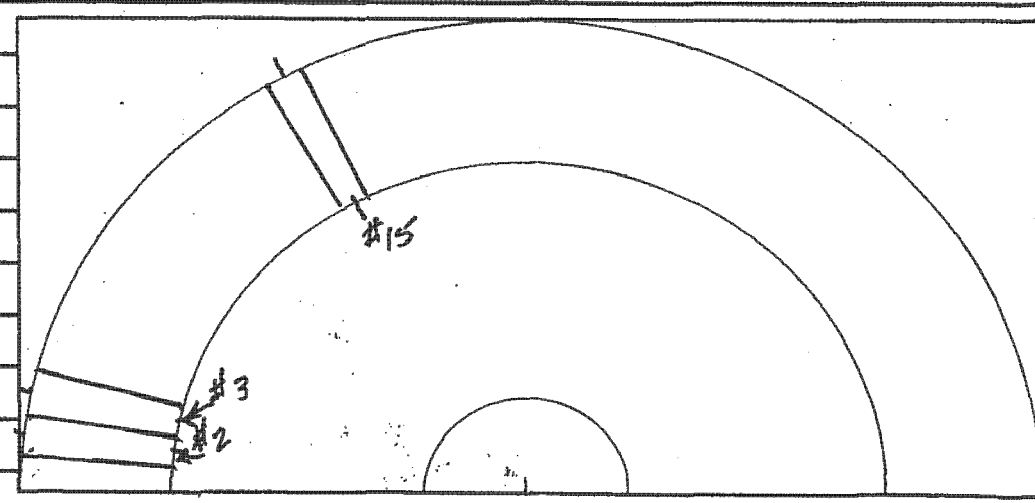

Reviewed By:	SNT Level:	Date:	Page of
		5/06/02	

FORM #204 - 11/4/95

IP7007195

REINHART
& ASSOCIATES, INC.
NONDESTRUCTIVE EVALUATION
SPECIALISTS
P.O BOX 9802, SUITE 303
AUSTIN, TEXAS 78766
(512) 834-8911 FAX# (512) 834-1266

MAGNETIC PARTICLE EXAMINATION RECORD

Project No.: C6985	Site: Intermountain Power Service Corp.	Date: 3/6/02	Time: N/A
Exam Area: Unit 2	Line/Subassembly: IP Rotor Diaphragm	Identification: Turbine End Upper & Lower #14	

Examiner: R. Dwyer	SNT Level: II	Procedure:	Material		Surface Finish: Sandblasted
Examiner: R. Whitaker	SNT Level: II	No.: MT-707	Brand: Magnuflux Type: 14 AM Prepared Bath Batch No.: 02A026		Surface Temp.: 70 Deg.
Examiner:	SNT Level:	Rev.: 6	Mixed With: N/A Batch No.: N/A		U.V. Lamp: ARDROX 1020

Material Application	Current Type	Magnetization		S/N:
Dusting [ ] Spraying [X] Flooding [ ]	AC [ ] HWAC [ ] DC [X]	Machine Type: Magnuflux M530 S/N 95380 Type of Conductor: Draped Coil Current Level: 3000 Amp Turns	Coil Dia.: 46" Prod. Spacing: N/A	UV-007 Output: 800 mw/cm^2

Results:

Indication was noted on the upper half leading edge of blade at the out ring attachment area on blades #31, #32, #33, & #54

No recordable indications were noted on the lower half

Blades are numbered looking in the direction of flow starting on left side going CW

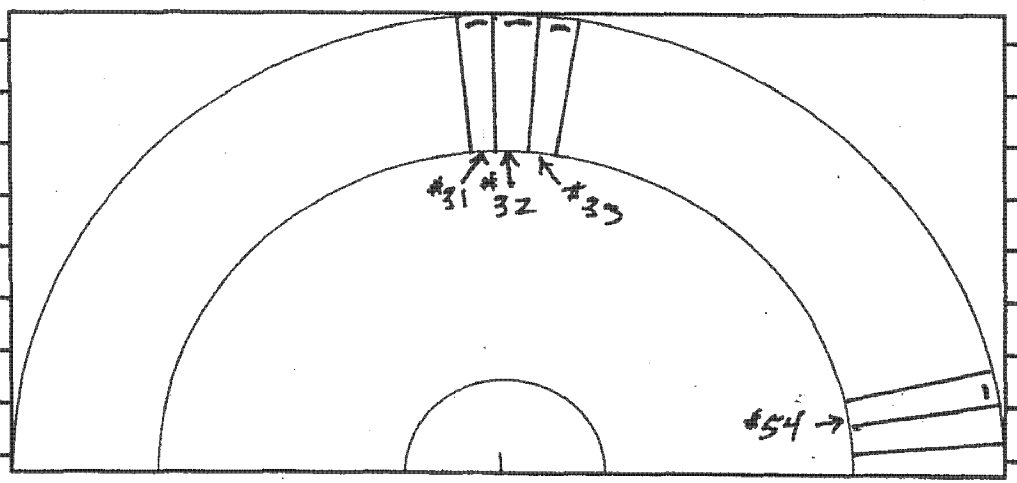

Reviewed By:	SNT Level: HL	Date: 5/06/02	Page of

FORM #204 - 11/4/95

IP7007196

REINHART
& ASSOCIATES, INC.
NONDESTRUCTIVE EVALUATION
SPECIALISTS
P.O BOX 9002, SUITE 303
AUSTIN, TEXAS 78766
(512) 834-8911 FAX# (512) 834-1268

MAGNETIC PARTICLE EXAMINATION RECORD

Project No.: C6985	Site: Intermountain Power Service Corp.			Date: 3/8/02	Time: N/A
Exam Area: Unit 2	Line/Subassembly: IP Rotor Diaphragm			Identification: Turbine End Upper&Lower #9 & #10	
Examiner: R. Dwyer	SNT Level: II	Procedure:	Material		Surface Finish: Sandblasted
Examiner: R. Whitaker	SNT Level: II	No.: MT-707	Brand: Magnuflux Type: 14 AM Prepared Bath Batch No.: 02A026		Surface Temp.: 70 Deg.
Examiner:	SNT Level:	Rev.: 6	Mixed With: N/A Batch No.: N/A		U.V. Lamp: ARDROX 1020

Material Application	Current Type	Magnetization		S/N: UV-007
Dusting [ ] Spraying [X] Flooding [ ]	AC [ ] HWAC [ ] DC [X]	Machine Type: Magnuflux M530 S/N 95380 Type of Conductor: Draped Coil Current Level: 3000 Amp Turns	Coil Dia.: 48" Prod. Spacing: N/A	Output: 800 mw/cm^2

Results:

Performed WFMT on the above listed diaphragms

No Recordable Indications Noted

Reviewed By:	SNT Level: III	Date: 3/06/02	Page of

FORM #204 - 11/4/95

IP7007197

REINHART
& ASSOCIATES, INC.
NONDESTRUCTIVE EVALUATION
SPECIALISTS
P.O BOX 9002, SUITE 303
AUSTIN, TEXAS 78766
(512) 834-8911 FAX# (512) 834-1266

MAGNETIC PARTICLE EXAMINATION RECORD

Project No.:	C6985	Site:	Intermountain Power Service Corp.			Date: 3/8/02	Time: N/A
Exam Area:	Unit 2	Line/Subassembly:	IP Rotor Diaphragm			Identification:	Turbine End Upper&Lower #11 & #13
Examiner:	R. Dwyer	SNT Level:	II	Procedure:	Material	Surface Finish:	Sandblasted
Examiner:	R. Whitaker	SNT Level:	II	No.: MT-707	Brand: Magnuflux Type: 14 AM Prepared Bath Batch No.: 02A026	Surface Temp.:	70 Deg.
Examiner:		SNT Level:		Rev.: 6	Mixed With: N/A Batch No.: N/A	U.V. Lamp:	ARDROX 1020
Material Application	Current Type	Magnetization				S/N:	UV-007
Dusting [ ] Spraying [X] Flooding [ ]	AC [ ] HWAC [ ] DC [X]	Machine Type: Magnuflux M530 S/N 95380 Type of Conductor: Draped Coil Current Level: 3000 Amp Turns			Coil Dia.: 48" Prod. Spacing: N/A	Output:	800 mw/cm^2

Results:

Performed WFMT on the above listed diaphragms

No Recordable Indications Noted

Reviewed By: GM	SNT Level: III	Date: 5/06/02	Page of

FORM #204 - 11/4/95

IP7007198

REINHART
& ASSOCIATES, INC.
NONDESTRUCTIVE EVALUATION
SPECIALISTS
P.O BOX 9902, SUITE 303
AUSTIN, TEXAS 78766
(512) 834-8911 FAX# (512) 834-1296

MAGNETIC PARTICLE EXAMINATION RECORD

Project No.: C6985	Site: Intermountain Power Service Corp.			Date: 3/7/02	Time: N/A
Exam Area: Unit 2	Line/Subassembly: IP Rotor Diaphragm			Identification: Gen. End Upper & Lower #9	
Examiner: R. Dwyer	SNT Level: II	Procedure:	Material: Brand: Magnuflux	Surface Finish: Sandblasted	
Examiner: R. Whitaker	SNT Level: II	No.: MT-707	Type: 14 AM Prepared Bath Batch No.: 02A026	Surface Temp.: 70 Deg.	
Examiner:	SNT Level:	Rev.: 6	Mixed With: N/A Batch No.: N/A	U.V. Lamp: ARDROX 1020	

Material Application	Current Type	Magnetization		S/N:
Dusting [ ] Spraying [X] Flooding [ ]	AC [ ] HWAC [ ] DC [X]	Machine Type: Magnulfux M530 S/N 95380 Type of Conductor: Draped Coil Current Level: 3000 Amp Turns	Coil Dia.: 48" Prod. Spacing: N/A	UV-007 Output: 800 mw/cm^2

Results:

Performed WFMT on the above listed diaphragms

No Recordable Indications Noted

Reviewed By:	SNT Level:	Date: 5/06/02	Page of

FORM #204 - 11/4/95

IP7007199

REINHART
& ASSOCIATES, INC.
NONDESTRUCTIVE EVALUATION
SPECIALISTS
P.O BOX 9802, SUITE 303
AUSTIN, TEXAS 78766
(512) 834-8911 FAX# (512) 834-1266

MAGNETIC PARTICLE EXAMINATION RECORD

Project No.:	C6985	Site:	Intermountain Power Service Corp.			Date: 3/6/02	Time: N/A
Exam Area:	Unit 2	Line/Subassembly:	IP Rotor Diaphragm			Identification:	Gen. End Upper & Lower #11, #12, #13, & #14
Examiner:	R. Dwyer	SNT Level:	II	Procedure:	Material	Surface Finish:	Sandblasted
Examiner:	R. Whitaker	SNT Level:	II	No.: MT-707	Brand: Magnuflux Type: 14 AM Prepared Bath Batch No.: 02A026	Surface Temp.:	70 Deg.
Examiner:		SNT Level:		Rev.: 6	Mixed With: N/A Batch No.: N/A	U.V. Lamp:	ARDROX 1020

Material Application	Current Type	Magnetization		S/N:	
Dusting [ ]	AC [ ]	Machine Type: Magnuflux M530 S/N 95380			UV-007
Spraying [X]	HWAC [ ]	Type of Conductor: Draped Coil	Coil Dia.: 48"	Output:	800 mw/cm^2
Flooding [ ]	DC [X]	Current Level: 3000 Amp Turns	Prod. Spacing: N/A		

Results:

Performed WFMT on the above listed diaphragms

No Recordable Indications Noted

Reviewed By:	SNT Level:	Date:	Page of
[signature]	II	5/06/02	

FORM #204 - 11/4/95

IP7007200

REINHART
& ASSOCIATES, INC.
NONDESTRUCTIVE EVALUATION
SPECIALISTS
P.O BOX 9602, SUITE 303
AUSTIN, TEXAS 78766
(512) 834-0911 FAX# (512) 834-1266

MAGNETIC PARTICLE EXAMINATION RECORD

Project No.: C6958	Site: Intermountain Power Service Corp.			Date: 3/14/02	Time: N/A
Exam Area: Unit 2	Line/Subassembly: IP Inner Shell			Identification: Upper Shell Fit Areas Of	
Examiner: R. Whitaker	SNT Level: II	Procedure:	Material	Surface Finish: Sandblasted	
Examiner: R. Dwyer	SNT Level: II	No.: MT-704	Brand: Magnuflux Type: 14 AM Prepared Bath Batch No.: 02A026	Surface Temp.: 65 Deg.	
Examiner:	SNT Level:	Rev.: 2	Mixed With: N/A Batch No.: N/A	U.V. Lamp: ARDROX 1020	

Material Application	Current Type	Magnetization		S/N: UV-007
Dusting [ ] Spraying [X] Flooding [ ]	AC [X] HWAC [ ] DC [ ]	Machine Type: ARDROX AX-600 YOKE Type of Conductor: N/A Current Level: N/A	Coil Dia.: N/A Prod. Spacing: 4 to 6 Inches	Output: 800 mw/cm^2

Results:

Performed WFMT on the IP inner upper shell fit areas of #1 and #2 generator and turbine ends

No recordable indications noted

Reviewed By:	SNT Level: III	Date: 5/06/02	Page of

FORM #204 - 11/4/95

IP7007201

REINHART
& ASSOCIATES, INC.
NONDESTRUCTIVE EVALUATION
SPECIALISTS
P.O BOX 9692, SUITE 303
AUSTIN, TEXAS 78766
(512) 834-6911 FAX# (512) 834-1266

MAGNETIC PARTICLE EXAMINATION RECORD

Project No.:	C6958	Site:	Intermountain Power Service Corp.			Date: 3/14/02	Time: N/A
Exam Area:	Unit 2	Line/Subassembly:	IP Outer Shell			Identification:	Upper Shell Fit Areas
Examiner:	R. Whitaker	SNT Level:	II	Procedure:	Material	Surface Finish:	Sandblasted
Examiner:	R. Dwyer	SNT Level:	II	No.: MT-704	Brand: Magnuflux Type: 14 AM Prepared Bath Batch No.: 02A026	Surface Temp.:	65 Deg.
Examiner:		SNT Level:		Rev.: 2	Mixed With: N/A Batch No.: N/A	U.V. Lamp:	ARDROX 1020

Material Application	Current Type	Magnetization		S/N:
Dusting [ ] Spraying [X] Flooding [ ]	AC [X] HWAC [ ] DC [ ]	Machine Type: ARDROX AX-600 YOKE Type of Conductor: N/A Current Level: N/A	Coil Dia.: N/A Prod. Spacing: 4 to 6 inches	UV-007 Output: 800 mw/cm^2

Results:

Performed WFMT on the IP outer upper shell fit areas

No recordable indications noted

Reviewed By:	SNT Level:	Date:	Page of
[signature]	JL	5/06/02	

FORM #204 - 11/4/95

IP7007202

REINHART
& ASSOCIATES, INC.
NONDESTRUCTIVE EVALUATION
SPECIALISTS
P.O BOX 9802, SUITE 303
AUSTIN, TEXAS 78766
(512) 834-8911 FAX# (512) 834-1266

MAGNETIC PARTICLE EXAMINATION RECORD

Project No.:	C6958	Site:	Intermountain Power Service Corp.			Date: 3/14/02	Time: N/A
Exam Area:	Unit 2	Line/Subassembly:	IP Packing Heads			Identification:	N-3 & N-4 Upper & Lower
Examiner:	R. Whitaker	SNT Level:	II	Procedure:	Material	Surface Finish:	Sandblasted
Examiner:	R. Dwyer	SNT Level:	II	No.: MT-704	Brand: Magnuflux Type: 14 AM Prepared Bath Batch No.: 02A026	Surface Temp.:	65 Deg.
Examiner:	R. Rocha	SNT Level:	II	Rev.: 2	Mixed With: N/A Batch No.: N/A	U.V. Lamp:	ARDROX 1020

Material Application	Current Type	Magnetization		S/N:
Dusting [ ] Spraying [X] Flooding [ ]	AC [X] HWAC [ ] DC [ ]	Machine Type: ARDROX AX-600 YOKE Type of Conductor: N/A Current Level: N/A	Coil Dia.: N/A Prod. Spacing: 4 to 6 Inches	UV-007 Output: 800 mw/cm^2

Results:

Performed WFMT on the IP N3 and N4 upper and lower packing heads

No recordable indications noted

Reviewed By:	SNT Level: III	Date: 5/08/02	Page of

FORM #204 - 11/4/95

IP7007203

REINHART
& ASSOCIATES, INC.
NONDESTRUCTIVE EVALUATION
SPECIALISTS
P.O BOX 9902, SUITE 303
AUSTIN, TEXAS 78766
(512) 834-8911 FAX# (512) 834-1288

MAGNETIC PARTICLE EXAMINATION RECORD

Project No.: C6958	Site: Intermountain Power Service Corp.			Date: 3/14/02	Time: N/A
Exam Area: Unit 2	Line/Subassembly: HP Outer Shell			Identification: Upper & Lower Shell Fit Areas	
Examiner: R. Whitaker	SNT Level: II	Procedure:	Material	Surface Finish: Sandblasted	
Examiner: R. Dwyer	SNT Level: II	No.: MT-704	Brand: Magnuflux Type: 14 AM Prepared Bath Batch No.: 02A026	Surface Temp.: 65 Deg.	
Examiner:	SNT Level:	Rev.: 2	Mixed With: N/A Batch No.: N/A	U.V. Lamp: ARDROX 1020	
Material Application	Current Type	Magnetization		S/N: UV-007	
Dusting [ ] Spraying [X] Flooding [ ]	AC [X] HWAC [ ] DC [ ]	Machine Type: ARDROX AX-600 YOKE Type of Conductor: N/A Current Level: N/A	Coil Dia.: N/A Prod. Spacing: 4 to 6 inches	Output: 800 mw/cm^2	

Results:

Performed WFMT on the HP outer upper and lower shell fit areas

No recordable indications noted

Reviewed By:	SNT Level: III	Date: 5/06/02	Page of

FORM #204 - 11/4/95

IP7007204

REINHART
& ASSOCIATES, INC.
NONDESTRUCTIVE EVALUATION
SPECIALISTS
P.O BOX 9002, SUITE 303
AUSTIN, TEXAS 78766
(512) 834-6911 FAX# (512) 834-1266

MAGNETIC PARTICLE EXAMINATION RECORD

Project No.: C6958	Site: Intermountain Power Service Corp.	Date: 3/11/02	Time: N/A
Exam Area: Unit 2	Line/Subassembly: Reheat Stop Valve	Identification: Valve Disk Seat Surface	

Examiner: R. Whitaker	SNT Level: II	Procedure:	Material		Surface Finish: Sandblasted
Examiner:	SNT Level:	No.: MT-704	Brand: Magnuflux	Type: 14 AM Prepared Bath	Surface Temp.: 65 Deg.
Examiner:	SNT Level:	Rev.: 2	Batch No.: 02A026	Mixed With: N/A	U.V. Lamp: ARDROX 1020
			Batch No.: N/A		

Material Application	Current Type	Magnetization		S/N: UV-007
Dusting [ ]	AC [X]	Machine Type: ARDROX AX-600 YOKE		
Spraying [X]	HWAC [ ]	Type of Conductor: N/A	Coil Dia.: N/A	Output: 800 mw/cm^2
Flooding [ ]	DC [ ]	Current Level: N/A	Prod. Spacing: 4 to 6 inches	

Results:

Performed WFMT on the valve disk seat surface of #1 and #2 reheat stop vlaves

No recordable indications noted

Reviewed By:	SNT Level: III	Date: 5/06/02	Page of

FORM #204 - 11/4/95

IP7007205

REINHART
& ASSOCIATES, INC.
NONDESTRUCTIVE EVALUATION
SPECIALISTS
P.O BOX 9802, SUITE 303
AUSTIN, TEXAS 78766
(512) 834-8911 FAX# (512) 834-1266

MAGNETIC PARTICLE EXAMINATION RECORD

Project No.:	C6958	Site:	Intermountain Power Service Corp.			Date: 3/14/02	Time: N/A
Exam Area:	Unit 2	Line/Subassembly:	Reheat Stop Valve			Identification:	Valve Casing
Examiner:	R. Whitaker	SNT Level:	II	Procedure:	Material	Surface Finish:	Sandblasted
Examiner:	R. Dwyer	SNT Level:	II	No.: MT-704	Brand: Magnuflux Type: 14 AM Prepared Bath Batch No.: 02A026	Surface Temp.:	65 Deg.
Examiner:		SNT Level:		Rev.: 2	Mixed With: N/A Batch No.: N/A	U.V. Lamp:	ARDROX 1020

Material Application	Current Type	Magnetization		S/N:
Dusting [ ] Spraying [X] Flooding [ ]	AC [X] HWAC [ ] DC [ ]	Machine Type: ARDROX AX-600 YOKE Type of Conductor: N/A Current Level: N/A	Coil Dia.: N/A Prod. Spacing: 4 to 6 inches	UV-007 Output: 800 mw/cm^2

Results:

Performed WFMT on the valve casing of #1 and #2 reheat stop vlaves

No recordable indications noted

Reviewed By:	SNT Level:	Date:	Page of
[signature]	III	5/06/02	

FORM #204 - 11/4/95

IP7007206

REINHART
& ASSOCIATES, INC.
NONDESTRUCTIVE EVALUATION
SPECIALISTS
P.O BOX 9992, SUITE 504
AUSTIN, TEXAS 78766
(512) 834-8911 FAX# (512) 834-1296

MAGNETIC PARTICLE EXAMINATION RECORD

Project No.:	C6958	Site:	Intermountain Power Service Corp.			Date: 3/11/02	Time: N/A
Exam Area:	Unit 2	Line/Subassembly:	Reheat Stop Valves			Identification:	Seal Head Gasket Surfaces
Examiner:	M. Marti	SNT Level:	II	Procedure:	Material	Surface Finish:	Sandblasted
Examiner:		SNT Level:		No.: MT-704	Brand: Magnuflux Type: 14 AM Prepared Bath Batch No.: 02A026	Surface Temp.:	65 Deg.
Examiner:		SNT Level:		Rev.: 2	Mixed With: N/A Batch No.: N/A	U.V. Lamp:	ARDROX 1020

Material Application	Current Type	Magnetization				S/N:	Output:
Dusting [ ] Spraying [X] Flooding [ ]	AC [X] HWAC [ ] DC [ ]	Machine Type: ARDROX AX-600 YOKE Type of Conductor: N/A Current Level: N/A	Coil Dia.: N/A Prod. Spacing: 4 to 6 Inches			UV-007	800 mw/cm^2

Results:

Performed WFMT on the seal head gasket surfaces of #1 and #2 reheat stop vlaves

No recordable indications noted

Reviewed By:	SNT Level:	Date:	Page of
GM	III	5/06/02	

FORM #204 - 11/4/95

IP7007207

REINHART
& ASSOCIATES, INC.
NONDESTRUCTIVE EVALUATION
SPECIALISTS
P.O BOX 9602, SUITE 303
AUSTIN, TEXAS 78766
(512) 834-6911 FAX# (512) 834-1266

MAGNETIC PARTICLE EXAMINATION RECORD

Project No.: C6958	Site: Intermountain Power Service Corp.	Date: 3/11/02	Time: N/A
Exam Area: Unit 2	Line/Subassembly: Intercept Vavle	Identification: Valve Disk Seat Surface	

Examiner: M Marti	SNT Level: II	Procedure:	Material: Brand: Magnuflux	Surface Finish: Sandblasted
Examiner:	SNT Level:	No.: MT-704	Type: 14 AM Prepared Bath; Batch No.: 02A026	Surface Temp.: 65 Deg.
Examiner:	SNT Level:	Rev.: 2	Mixed With: N/A; Batch No.: N/A	U.V. Lamp: ARDROX 1020

Material Application	Current Type	Magnetization	S/N: UV-007
Dusting [ ]	AC [X]	Machine Type: ARDROX AX-600 YOKE	
Spraying [X]	HWAC [ ]	Type of Conductor: N/A; Coil Dia.: N/A	Output: 800 mw/cm^2
Flooding [ ]	DC [ ]	Current Level: N/A; Prod. Spacing: 4 to 6 Inches	

Results:

Performed WFMT on the valve disk seat surface of #1 and #2 intercept vlaves

No recordable indications noted

Reviewed By:	SNT Level: III	Date: 5/06/02	Page of

FORM #204 - 11/4/95

IP7007208

REINHART
& ASSOCIATES, INC.
NONDESTRUCTIVE EVALUATION
SPECIALISTS
P.O BOX 9882, SUITE 303
AUSTIN, TEXAS 78766
(512) 834-8911 FAX# (512) 834-1266

MAGNETIC PARTICLE EXAMINATION RECORD

Project No.:	C6958	Site:	Intermountain Power Service Corp.			Date: 3/11/02	Time: N/A
Exam Area:	Unit 2	Line/Subassembly:	Intercept Vavle			Identification:	Valve Pressure Seal Head
Examiner:	M Marti	SNT Level:	II	Procedure:	Material	Surface Finish:	Sandblasted
Examiner:		SNT Level:		No.: MT-704	Brand: Magnuflux Type: 14 AM Prepared Bath Batch No.: 02A026	Surface Temp.:	65 Deg.
Examiner:		SNT Level:		Rev.: 2	Mixed With: N/A Batch No.: N/A	U.V. Lamp:	ARDROX 1020
Material Application	Current Type	Magnetization				S/N:	UV-007
Dusting [ ] Spraying [X] Flooding [ ]	AC [X] HWAC [ ] DC [ ]	Machine Type: ARDROX AX-600 YOKE Type of Conductor: N/A Current Level: N/A			Coil Dia.: N/A Prod. Spacing: 4 to 6 Inches	Output:	800 mw/cm^2

Results:

Performed WFMT on the valve pressure seal heads of #1 and #2 intercept vlaves

No recordable indications noted

Reviewed By:	SNT Level: III	Date: 5/06/02	Page of

FORM #204 - 11/4/95

IP7007209

REINHART
& ASSOCIATES, INC.
NONDESTRUCTIVE EVALUATION
SPECIALISTS
P.O BOX 9982, SUITE 303
AUSTIN, TEXAS 78766
(512) 834-8911 FAX# (512) 834-1266

MAGNETIC PARTICLE EXAMINATION RECORD

Project No.: C6958	Site: Intermountain Power Service Corp.	Date: 3/11/02	Time: N/A
Exam Area: Unit 2	Line/Subassembly: Intercept Vavle	Identification: Upper Head Gasket Surfaces	

Examiner: M. Marti	SNT Level: II	Procedure:	Material		Surface Finish: Sandblasted
Examiner:	SNT Level:	No.: MT-704	Brand: Magnuflux Type: 14 AM Prepared Bath Batch No.: 02A026		Surface Temp.: 65 Deg.
Examiner:	SNT Level:	Rev.: 2	Mixed With: N/A Batch No.: N/A		U.V. Lamp: ARDROX 1020

Material Application	Current Type	Magnetization		S/N: UV-007
Dusting [ ] Spraying [X] Flooding [ ]	AC [X] HWAC [ ] DC [ ]	Machine Type: ARDROX AX-600 YOKE Type of Conductor: N/A Current Level: N/A	Coil Dia.: N/A Prod. Spacing: 4 to 6 Inches	Output: 800 mw/cm^2

Results:

Performed WFMT on the pressure seal head gasket surfaces of #1 and #2 intercept vlaves

No recordable indications noted

Reviewed By:	SNT Level: III	Date: 3/06/02	Page of

FORM #204 - 11/4/95

IP7007210

REINHART
& ASSOCIATES, INC.
NONDESTRUCTIVE EVALUATION
SPECIALISTS
P.O BOX 9602, SUITE 303
AUSTIN, TEXAS 78766
(512) 834-8911 FAX# (512) 834-1266

MAGNETIC PARTICLE EXAMINATION RECORD

Project No.:	C6985	Site:	Intermountain Power Service Corp.	Date:	3/14/02
Time:	N/A				
Exam Area:	Unit 2	Line/Subassembly:	Coupling Bolts	Identification:	IP to LP

Examiner:	R. Rocha	SNT Level:	II	Procedure:	Material	Surface Finish:	Sandblasted
Examiner:	L Jacobson	SNT Level:	II	No.:	MT-707	Surface Temp.:	65 Deg.
Examiner:	M. Marti	SNT Level:	II	Rev.:	6	U.V. Lamp:	ARDROX 1020

Material:
Brand: Magnuflux
Type: 14 AM Prepared Bath
Batch No.: 02A026
Mixed With: N/A
Batch No.: N/A

Material Application	Current Type	Magnetization	S/N:
Dusting [ ]	AC [ ]	Machine Type: Magnulfux M530 S/N 95380	UV-007
Spraying [X]	HWAC [ ]	Type of Conductor: Draped Coil — Coil Dia.: 8"	Output:
Flooding [ ]	DC [X]	Current Level: 2000 Amp Turns — Prod. Spacing: N/A	800 mw/cm^2

Results:

Performed WFMT on the IP to LP coupling bolts

No Recordable Indications Noted

Reviewed By: CM	SNT Level: III	Date: 5/06/02	Page of

FORM #204 11/4/95

IP7007211

REINHART
& ASSOCIATES, INC.
NONDESTRUCTIVE EVALUATION
SPECIALISTS
P.O BOX 9602, SUITE 303
AUSTIN, TEXAS 78766
(512) 834-8911 FAX# (512) 834-1266

MAGNETIC PARTICLE EXAMINATION RECORD

Project No.: C6985	Site: Intermountain Power Service Corp.			Date: 3/14/02	Time: N/A
Exam Area: Unit 2	Line/Subassembly: Coupling Bolts			Identification: HP to IP	
Examiner: R. Rocha	SNT Level: II	Procedure:	Material		Surface Finish: Sandblasted
Examiner: L Jacobson	SNT Level: II	No.: MT-707	Brand: Magnuflux Type: 14 AM Prepared Bath Batch No.: 02A026		Surface Temp.: 65 Deg.
Examiner: M. Marti	SNT Level: II	Rev.: 6	Mixed With: N/A Batch No.: N/A		U.V. Lamp: ARDROX 1020

Material Application	Current Type	Magnetization		
Dusting [ ] Spraying [X] Flooding [ ]	AC [ ] HWAC [ ] DC [X]	Machine Type: Magnuflux M530 S/N 95380 Type of Conductor: Draped Coil Current Level: 2000 Amp Turns	Coil Dia.: 8" Prod. Spacing: N/A	S/N: UV-007 Output: 800 mw/cm^2

Results:

Performed WFMT on the HP to IP coupling bolts

No Recordable Indications Noted

Reviewed By:	SNT Level: III	Date: 5/06/02	Page of

FORM #204 - 11/4/95

IP7007212

ATTACHMENT 4: ULTRASONIC (UT) DATA & CALIBRATION SHEETS

C-6958

Turbine Components

IP7007213

REINHART
& ASSOCIATES, INC.
NONDESTRUCTIVE EVALUATION
SPECIALISTS
P.O BOX 9802, SUITE 303
AUSTIN, TEXAS 78766
(512) 834-9911 FAX# (512) 834-1266

GENERAL ULTRASONIC EXAMINATION RECORD

Project No: C6985	Site: Intermountain Power Service Corp.				Date: 3/14/02		Time:	Sheet No:	
								Cal. Sheet No:	
Component: Unit 2	Subassembly: IP Inner Shells							Identification: All Studs Gen & Gov Ends	
Examiner: R. Dwyer	SNT Level: II	Procedure	Angel	0	45	60	70	Surface Preperation:	
Examiner:	SNT Level:	No.: UT-911	Scan	52				As Found	
Examiner:	SNT Level:	Rev.: O	dB						

Comments:

Results:

Performed ultrasonic examination of all the IP inner shell governor and generator end studs

No recordable indications noted

State Exam Area Limitations (If Any) None

Reviewed By:	E. M. Reinhart	SNT Level: III	Date: 5/06/02

Form #307 - 4/8/03

IP7007214

REINHART
& ASSOCIATES, INC.
NONDESTRUCTIVE EVALUATION
SPECIALISTS
P.O BOX 9802, SUITE 303
AUSTIN, TEXAS 78766
(512) 834-8911 FAX# (512) 834-1206

GENERAL ULTRASONIC EXAMINATION RECORD

Project No: C6985	Site: Intermountain Power Service Corp.				Date: 3/14/02		Time:	Sheet No:	
								Cal. Sheet No:	
Component: Unit 2	Subassembly: IP Outer Shell							Identification: All Studs	
Examiner: R. Dwyer	SNT Level: II	Procedure	Angel	0	45	60	70	Surface Preperation:	
Examiner:	SNT Level:	No.: UT-911	Scan	52				As Found	
Examiner:	SNT Level:	Rev.: O	dB						

Comments:

Results:

Performed ultrasonic examination of all the IP outer shell studs

No recordable indications noted

State Exam Area Limitations (If Any None

Reviewed By:	SNT Level: III	Date: 5/06/02

Form #302 - 4/8/93

IP7007215

REINHART
& ASSOCIATES, INC.
NONDESTRUCTIVE EVALUATION
SPECIALISTS
P.O BOX 9602, SUITE 303
AUSTIN, TEXAS 78766
(512) 834-8941 FAX# (512) 834-1268

GENERAL ULTRASONIC EXAMINATION RECORD

Project No: C6985	Site: Intermountain Power Service Corp.				Date: 3/11/02		Time:	Sheet No:	
								Cal. Sheet No:	
Component: Unit 2	Subassembly: HP Outer Shell							Identification: All Studs	
Examiner: M. Marti	SNT Level: II	Procedure	Angel	0	45	60	70	Surface Preperation:	
Examiner:	SNT Level:	No.: UT-911	Scan	52				As Found	
Examiner:	SNT Level:	Rev.: O	dB						

Comments:

Results:

Performed ultrasonic examination of all the HP outer shell studs

No recordable indications noted

State Exam Area Limitations (If Any None

Reviewed By: CM	SNT Level: III	Date: 5/06/02

Form #302 - 4/8/93

IP7007216

REINHART
& ASSOCIATES, INC.
NONDESTRUCTIVE EVALUATION
SPECIALISTS
P.O BOX 9902, SUITE 303
AUSTIN, TEXAS 78766
(512) 834-8911 FAX# (512) 834-1288

GENERAL ULTRASONIC EXAMINATION RECORD

Project No: C6985	Site: Intermountain Power Service Corp.				Date: 3/11/02		Time:	Sheet No:	
								Cal. Sheet No:	
Component: Unit 2	Subassembly: Control Valves							Identification: Studs on Valves Body #1,#2,#3, & #4	
Examiner: M. Marti	SNT Level: II	Procedure	Angel	0	45	60	70	Surface Preperation:	
Examiner:	SNT Level:	No.: UT-911	Scan	52				As Found	
Examiner:	SNT Level:	Rev.: O	dB						

Comments:

Results:

Performed ultrasonic examination of all the control valve body studs

No recordable indications noted

State Exam Area Limitations (If Any None

Reviewed By:	SNT Level: III	Date: 5/06/02

IP7007217

REINHART
& ASSOCIATES, INC.
NONDESTRUCTIVE EVALUATION
SPECIALISTS
P.O BOX 9992, SUITE 303
AUSTIN, TEXAS 78766
(512) 834-8911 FAX# (512) 834-1298

GENERAL ULTRASONIC EXAMINATION RECORD

Project No: C6985	Site: Intermountain Power Service Corp.				Date: 3/11/02		Time:	Sheet No:	
								Cal. Sheet No:	
Component: Unit 2	Subassembly: Stop Valves							Identification: Studs on Valves Body #1,#2,#3, & #4	
Examiner: M. Marti	SNT Level: II	Procedure	Angel	0	45	60	70	Surface Preperation:	
Examiner:	SNT Level:	No.: UT-911	Scan	52				As Found	
Examiner:	SNT Level:	Rev.: O	dB						

Comments:

Results:

Performed ultrasonic examination of all the stop valve body studs

No recordable indications noted

State Exam Area Limitations (If Any None

Reviewed By:	SNT Level: III	Date: 5/06/02

Form #302 - 4/8/93

IP7007218

REINHART
& ASSOCIATES, INC.
NONDESTRUCTIVE EVALUATION
SPECIALISTS
P.O BOX 9602, SUITE 303
AUSTIN, TEXAS 78766
(512) 834-8911 FAX# (512) 834-1266

GENERAL ULTRASONIC EXAMINATION RECORD

Project No: C6985	Site: Intermountain Power Service Corp.						Date: 3/14/02	Time:	Sheet No: / Cal. Sheet No:
Component: Unit 2	Subassembly: Intercept Valve							Identification: Valve Upper Head Studs	
Examiner: R. Dwyer	SNT Level: II	Procedure	Angel	0	45	60	70	Surface Preperation:	
Examiner:	SNT Level:	No.: UT-911	Scan	52				As Found	
Examiner:	SNT Level:	Rev.: O	dB						

Comments:

Results:

Performed ultrasonic examination of the #1 and #2 intercept valve upper head studs

No recordable indications noted

State Exam Area Limitations (If Any None

Reviewed By:	SNT Level: II	Date: 3/06/02

Form #302 - 4/8/03

IP7007219

REINHART
& ASSOCIATES, INC.
NONDESTRUCTIVE EVALUATION
SPECIALISTS
P.O BOX 9602, SUITE 303
AUSTIN, TEXAS 78766
(512) 834-8911 FAX# (512) 834-1266

GENERAL ULTRASONIC EXAMINATION RECORD

Project No: C6985	Site: Intermountain Power Service Corp.				Date: 3/11/02		Time:	Sheet No:	
								Cal. Sheet No:	
Component: Unit 2	Subassembly: Intercept Valve						Identification: Valve Stem #1 & #2		
Examiner: M. Marti	SNT Level: II	Procedure	Angel	0	45	60	70	Surface Preperation:	
Examiner:	SNT Level:	No.: UT-911	Scan	52				As Found	
Examiner:	SNT Level:	Rev.: O	dB						

Comments:

Results:

Performed ultrasonic examination of the #1 and #2 intercept valve stems

No recordable indications noted

State Exam Area Limitations (If Any None

Reviewed By: CM	SNT Level: III	Date: 5/06/02

Form #302 - 4/8/93

IP7007220

REINHART
& ASSOCIATES, INC.
NONDESTRUCTIVE EVALUATION
SPECIALISTS
P.O BOX 9802, SUITE 303
AUSTIN, TEXAS 78766
(512) 834-8911 FAX# (512) 834-1296

GENERAL ULTRASONIC EXAMINATION RECORD

Project No: C6985	Site: Intermountain Power Service Corp.				Date: 3/11/02		Time:	Sheet No:	
								Cal. Sheet No:	
Component: Unit 2	Subassembly: CRV Valves							Identification: Studs on Valves Body #1 & #2	
Examiner: M. Marti	SNT Level: II	Procedure	Angel	0	45	60	70	Surface Preperation:	
Examiner:	SNT Level:	No.: UT-911	Scan	52				As Found	
Examiner:	SNT Level:	Rev.: O	dB						

Comments:

Results:

Performed ultrasonic examination of all the CRV valve body studs

No recordable indications noted

State Exam Area Limitations (If Any None

Reviewed By:	SNT Level: III	Date: 3/06/02

Form #302 - 4/8/93

IP7007221

REINHART
& ASSOCIATES, INC.
NONDESTRUCTIVE EVALUATION
SPECIALISTS
P.O BOX 9862, SUITE 303
AUSTIN, TEXAS 78766
(512) 834-8911 FAX# (512) 834-1268

GENERAL ULTRASONIC EXAMINATION RECORD

Project No: C6985	Site: Intermountain Power Service Corp.				Date: 3/14/02		Time:	Sheet No:	
								Cal. Sheet No:	
Component: Unit 2	Subassembly: Reheat Stop Valve						Identification: Lower ressure Seal Studs		
Examiner: R. Dwyer	SNT Level: II	Procedure	Angel	0	45	60	70	Surface Preperation:	
Examiner:	SNT Level:	No.: UT-911	Scan	52				As Found	
Examiner:	SNT Level:	Rev.: O	dB						

Comments:

Results:

Performed ultrasonic examination of the #1 and #2 reheat stop valve lower pressure seal studs

No recordable indications noted

State Exam Area Limitations (If Any None

Reviewed By: CM	SNT Level: II	Date: 5/06/02

Form #302 - 4/8/93

IP7007222

REINHART
& ASSOCIATES, INC.
NONDESTRUCTIVE EVALUATION
SPECIALISTS
P.O BOX 6992, SUITE 303
AUSTIN, TEXAS 78766
(512) 834-8911 FAX# (512) 834-1266

GENERAL ULTRASONIC EXAMINATION RECORD

Project No: C6985	Site: Intermountain Power Service Corp.				Date: 3/11/02		Time:	Sheet No:	
								Cal. Sheet No:	
Component: Unit 2	Subassembly: Reheat Stop Valve							Identification: Valve Stem #1 & #2	
Examiner: M. Marti	SNT Level: II	Procedure	Angel	0	45	60	70	Surface Preperation:	
Examiner:	SNT Level:	No.: UT-911	Scan	52				As Found	
Examiner:	SNT Level:	Rev.: O	dB						

Comments:

Results:

Performed ultrasonic examination of the #1 and #2 reheat stop valve stems

No recordable indications noted

State Exam Area Limitations (If Any None

Reviewed By:	SNT Level: III	Date: 5/06/02

Form #302 - 4/8/93

IP7007223

REINHART
& ASSOCIATES, INC.
NONDESTRUCTIVE EVALUATION
SPECIALISTS
P.O BOX 9602, SUITE 303
AUSTIN, TEXAS 78766
(512) 834-8911 FAX# (512) 834-1268

GENERAL ULTRASONIC EXAMINATION RECORD

Project No: C6985	Site: Intermountain Power Service Corp.							Date: 3/7/02	Time:	Sheet No: / Cal. Sheet No:
Component: Unit 2	Subassembly: Bearings								Identification: T1 &T2 Upper & Lower	
Examiner: R. Dwyer	SNT Level: II	Procedure	Angel	0	45	60	70	Surface Preperation:		
Examiner: R. Whitaker	SNT Level: I	No.: UT-910	Scan	52				As Found		
Examiner:	SNT Level:	Rev.:	dB							

Comments:

Results:

Performed ultrasonic examination of the T1 and T2 bearings to detect lack of bonding of the babbit mateial

No recordable indications noted

State Exam Area Limitations (If Any None

Reviewed By:	SNT Level: II	Date: 5/06/02

Form #300 4/8/03

IP7007224

REINHART
& ASSOCIATES, INC.
NONDESTRUCTIVE EVALUATION
SPECIALISTS
P.O BOX 9992, SUITE 303
AUSTIN, TEXAS 78766
(512) 934-8911 FAX# (512) 934-1266

GENERAL ULTRASONIC EXAMINATION RECORD

Project No: C6985	Site: Intermountain Power Service Corp.				Date: 3/7/02		Time:	Sheet No:	
								Cal. Sheet No:	
Component: Unit 2	Subassembly: Bearings							Identification: T3 &T4 Upper & Lower	
Examiner: R. Dwyer	SNT Level: II	Procedure	Angel	0	45	60	70	Surface Preperation:	
Examiner: R. Whitaker	SNT Level: I	No.: UT-910	Scan	52				As Found	
Examiner:	SNT Level:	Rev.:	dB						

Comments:

Results:

Performed ultrasonic examination of the T3 and T4 bearings to detect lack of bonding of the babbit mateial

No recordable indications noted

State Exam Area Limitations (If Any None

Reviewed By:	SNT Level: III	Date: 3/6/02

Form #302 - 4/8/93

IP7007225

REINHART
& ASSOCIATES, INC.
NONDESTRUCTIVE EVALUATION
SPECIALISTS
P.O BOX 9982, SUITE 303
AUSTIN, TEXAS 78766
(512) 834-8941 FAX# (512) 834-1298

GENERAL ULTRASONIC EXAMINATION RECORD

Project No: C6985	Site: Intermountain Power Service Corp.	Date: 3/7/02	Time:	Sheet No:
				Cal. Sheet No:

Component: Unit 2	Subassembly: Bearings	Identification: T5 Upper

Examiner: R. Dwyer	SNT Level: II	Procedure	Angel	0	45	60	70	Surface Preperation:
Examiner: R. Whitaker	SNT Level: I	No.: UT-910	Scan	52				As Found
Examiner:	SNT Level:	Rev.:	dB					

Comments:

Results:

Performed ultrasonic examination of the T5 upper bearing to detect lack of bonding of the babbit mateial

No recordable indications noted

State Exam Area Limitations (If Any None

Reviewed By: G. A. Reinhart	SNT Level: III	Date: 5/06/02

Form #302 - 4/8/93

IP7007226

REINHART
& ASSOCIATES, INC.
NONDESTRUCTIVE EVALUATION
SPECIALISTS
P.O BOX 9002, SUITE 303
AUSTIN, TEXAS 78766
(512) 834-6911 FAX# (512) 834-1266

GENERAL ULTRASONIC EXAMINATION RECORD

Project No: C6985	Site: Intermountain Power Service Corp.		Date: 3/8/02	Time:	Sheet No:
					Cal. Sheet No:
Component: Unit 2	Subassembly: Bearings			Identification: T12 Upper & Lower	

Examiner: R. Dwyer	SNT Level: II	Procedure	Angel	0	45	60	70	Surface Preperation:
Examiner: R. Whitaker	SNT Level: I	No.: UT-910	Scan	52				As Found
Examiner:	SNT Level:	Rev.:	dB					

Comments:

Results:

Performed ultrasonic examination of the T12 upper and lower bearing to detect lack of bonding of the babbit mateial

No recordable indications noted

State Exam Area Limitations (If Any None

Reviewed By: R. Reinhart	SNT Level: III	Date: 5/06/02

IP7007227

& ASSOCIATES, INC.
NONDESTRUCTIVE EVALUATION SPECIALISTS
P.O BOX 9602, SUITE 303
AUSTIN, TEXAS 78766
(512) 834-9911 FAX# (512) 834-1266

Date: 3/7/02
Customer: IPP
Location: Delta, UT

ULTRASONIC CALIBRATION RECORD (QC-400)

Scan & Type of Calibration: 0 Degree
Bearings T 1,2,3,4,&5

Instrument: QC-400
Serial No.: 13746A
Cal. Due Date: 12/13/02

Search Unit

Mfg.: Suzi
Type: P/C Ser. No.: SU4914
Elem.Size: .375" Freq.: 5 Mhz

Instrument Settings

DAC: Off Reject: Off
Filter: 0 Mode: FW
Freq.: 5 Damping: 0
Vel.: 320 Sync.: 1
Delay: 242 Gain: 52
Sweep: 1 Div. = 1 inches
Couplant Used: Ulta Gel

Calibration Check

Time: 10:00 Name: R. Dwyer
Time: 11:00 Name: R. Dwyer
Time: 13:00 Name: R. Dwyer
Time: 13:30 Name: R. Dwyer

Examiners

R. Dwyer Level: II
R. Whitaker Level: I
Level:
Procedure No.: UT-910

Reviewed By

Level: III
Review Date: 5/06/02

Digital Module

Surface/Depth: N/A Mode: N/A
Range: N/A Horn: N/A
Sync.: N/A Display: N/A
Polarity Mode: N/A
Velocity: N/A

Back Wall from the .2" step of block at 100% FSH

Ultrasonic Analog DAC

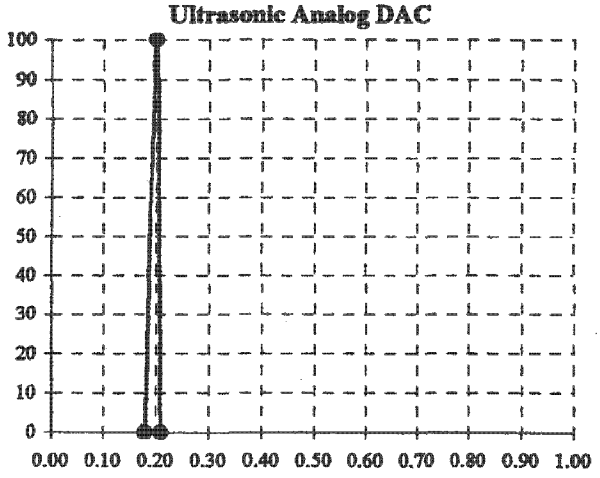

Calibration Block No.: Babbit step block
FBH SDH Dia. in.

DAC

Point#	MP (in.)	% FSH
1		
2		
3		
4		

FORM #320B 8/16/95

IP7007228

REINHART
& ASSOCIATES, INC.
NONDESTRUCTIVE EVALUATION
SPECIALISTS
P.O BOX 9802, SUITE 303
AUSTIN, TEXAS 78766
(512) 834-8911 FAX# (512) 834-1266

March 15, 2002

Mr. Phong Do
Intermountain Power Service Corp.
850 W. Brush Wellman Road
Delta, Utah 84624

Reference: R&A Job # C6958

Subject: Field Report of Examinations of Intermountain Power Service Corporation Unit 2 selected turbine components.

Summary of Component Examinations

During the period of March 6 through 15., 2002 Reinhart & Associates, Inc. (R&A) performed a series of nondestructive examinations on the Intermountain Power Unit 2 selected turbine components.

IP Turbine Rotor

Performed wet fluorescent magnetic particle examination on the IP rotor buckets, covers, tenons, packing lands, wheel faces, and wheel radius.

No recordable indications noted.

IP Section Diaphragms

Visual examination revealed light to heavy impact damage on #10 and #11.

See data sheet in attachment 1.

Performed wet fluorescent magnetic particle examination on the upper and lower governor and turbine end stages 9 through 14 diaphragms.

Stage #10 revealed three indications on the outer ring.
Stage #12 revealed four blades with indications.
Stage #14 revealed three blades with indications.

See data sheets in attachment 2 showing blade numbers and location of indications.

IP Shells

Performed wet fluorescent magnetic particle examination on the upper and lower, inner IP shell fit areas. Performed WFMT on upper outer IP shell only.

No recordable indications noted.

Performed ultrasonic examination of all IP Shell bolting.

No recordable indications noted.

IP Packing Heads

Performed wet fluorescent magnetic particle examination the IP section packing heads.

No recordable indications noted.

Performed ultrasonic examination on all packing head bolting.

No recordable indications noted

HP Shells

Performed wet fluorescent magnetic particle examination on the upper and lower outer HP shell fit areas.

Performed ultrasonic examination of all HP Shell bolting.

No recordable indications noted

Control Valve

Performed penetrant examination on the four control valve body seats

Control valves #2 and #4 revealed indications across the seat area.

Control valves #1 and # revealed no recordable indications.

See data sheets in attachment 3 showing location of indications

Ultrasonic examination of control valves 1 thru 4 studs revealed no recordable indications

Main Stop Valve

Performed wet fluorescent magnetic particle examination on the 1 thru 4 main stop valve screens. All four screens revealed indications in the welds around the screen.

See data sheet in attachment 2 showing location and size of indications.

Ultrasonic examination of main stop valves 1 thru 4 studs revealed no recordable indications

Intercept Valve

The wet fluorescent magnetic particle examination of the valve disc seat surface revealed no recordable indications.

The penetrant examination of the valve seat inner casing revealed no recordable indications.

The penetrant examination of the valve stem and disk assembly revealed no recordable indications.

The ultrasonic examination of the valve stem revealed no recordable indications.

The wet fluorescent magnetic particle examination of the valve pressure seal head revealed no recordable indications.

The ultrasonic examination of the valve upper head studs revealed no recordable indications.

The wet fluorescent magnetic particle examination of the upper head gasket surface revealed no recordable indications.

Reheat Stop Valve

The wet fluorescent magnetic particle examination of the valve disc seat surface revealed no recordable indications.

The wet fluorescent magnetic particle examination of the valve casing revealed no recordable indications.

The penetrant examination of the valve seat inner casing revealed no recordable indications.

The penetrant examination of the valve stem and disk assembly revealed no recordable indications.

The ultrasonic examination of the valve stem revealed no recordable indications.

The wet fluorescent magnetic particle examination of the valve pressure seal head revealed no recordable indications.

The penetrant examination of the valve pressure seal head assembly revealed no recordable indications.

The ultrasonic examination of the valve lower pressure seal studs revealed no recordable indications.

The wet fluorescent magnetic particle examination of the upper head gasket surface revealed no recordable indications.

The wet fluorescent magnetic particle examination of the seal head gasket surface revealed no recordable indications.

Bearings

Performed ultrasonic examination of the upper and lower bearing T1 thru T4 and T12, examined the upper half of T5 only.

No recordable indication noted.

Coupling Bolts

Performed wet fluorecent magnetic particle examination on the HP to IP and IP to LP coupling bolts.

No recordable indications noted.

If you have any questions please call.

Roland Dwyer
NDE Inspection Specialist

Attachment 1

Visual Data Sheets

& ASSOCIATES, INC.
NONDESTRUCTIVE EVALUATION SPECIALISTS
P.O. BOX 9802, SUITE 173
AUSTIN, TEXAS 78766
(512) 834-8911
FAX# (512) 834-1266

Customer: IPP
Date: 3/6/02
Examiner: R. Dwyer
R. Whitaker

VISUAL EXAMINATION REPORT

COMPONENT: Unit 2 IP Rotor Diaphragms

Upper Gen. End
#9 - NRI
#10 - Light impact damage on the trailing edges
#11 - Light impact damage on the trailing edges
#12 - No Recordable Indications (NRI)
#13 - NRI
#14 - NRI

Lower Gen. End
#9 - NRI
#10 - NRI
#11 - Moderate impact damage on the trailing edges
#12 - NRI
#13 - NRI
#14 - NRI

Upper Turbine End
#9 - NRI
#10 - NRI
#11 - Moderate impact damage on the trailing edges
#12 - NRI
#13 - NRI
#14 - Showed indication on the left horizontal joint blade to inner ring weld attachment area

Lower Turbine End
#9 - NRI
#10 - NRI
#11 - NRI
#12 - NRI
#13 - NRI
#14 - NRI

& ASSOCIATES, INC.
NONDESTRUCTIVE EVALUATION SPECIALISTS
P.O. BOX 9802, SUITE 173
AUSTIN, TEXAS 78766
(512) 834-8911
FAX# (512) 834-1766

Customer: IPP
Date: 3/10/02
Examiner: R. Dwyer
R. Whitaker

VISUAL EXAMINATION REPORT

COMPONENT: Unit 2 IP Rotor

Generator End
Stage #8 - Light impact damage on the leading edges and foreign material wedged under the shroud.
Stage #9 - Foreign material wedged under the shroud
Stage #10 - Foreign material wedged under the shroud
Stage #11 - No recordable indications
Stage #12 - No recordable indications
Stage #13 - No recordable indications
Stage #14 - No recordable indications

Governor End
Stage #8 - Light impact damage on the leading edges and foreign material wedged under the shroud.
Stage #9 - Foreign material wedged under the shroud
Stage #10 - Foreign material wedged under the shroud
Stage #11 - No recordable indications
Stage #12 - No recordable indications
Stage #13 - No recordable indications
Stage #14 - No recordable indications

Attachment 2

Magnetic Particle Data Sheets

REINHART
& ASSOCIATES, INC.
NONDESTRUCTIVE EVALUATION
SPECIALISTS
P.O BOX 9902, SUITE 303
AUSTIN, TEXAS 78766
(512) 934-8911 FAX# (512) 934-1296

MAGNETIC PARTICLE EXAMINATION RECORD

Project No.:	C6985	Site:	Intermountain Power Service Corp.			Date: 3/6/02	Time: N/A
Exam Area:	Unit 2	Line/Subassembly:	IP Rotor Diaphragm			Identification:	Turbine End Upper & Lower #14
Examiner:	R. Dwyer	SNT Level:	II	Procedure:	Material	Surface Finish:	Sandblasted
Examiner:	R. Whitaker	SNT Level:	II	No.: MT-707	Brand: Magnuflux Type: 14 AM Prepared Bath Batch No.: 02A026	Surface Temp.:	70 Deg.
Examiner:		SNT Level:		Rev.: 6	Mixed With: N/A Batch No.: N/A	U.V. Lamp:	ARDROX 1020

Material Application	Current Type	Magnetization			S/N:
Dusting [ ] Spraying [X] Flooding [ ]	AC [ ] HWAC [ ] DC [X]	Machine Type: Magnuflux M530 S/N 95380 Type of Conductor: Draped Coil Current Level: 3000 Amp Turns	Coil Dia.: 48" Prod. Spacing: N/A		UV-007 Output: 800 mw/cm^2

Results:

Indication was noted on the upper half leading edge of blade at the out ring attachment area on blades #31, #32, #33, & #54

No recordable indications were noted on the lower half

Blades are numbered looking in the direction of flow starting on left side going CW

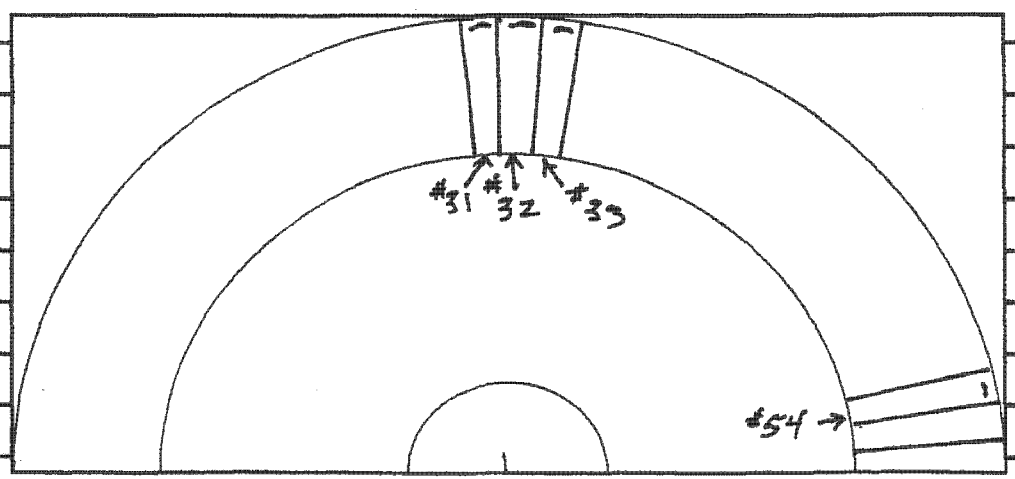

Reviewed By:	SNT Level:	Date:	Page of

FORM #204 - 11/4/95

IP7007237

REINHART
& ASSOCIATES, INC.
NONDESTRUCTIVE EVALUATION
SPECIALISTS
P.O BOX 9602, SUITE 308
AUSTIN, TEXAS 78766
(512) 834-8911 FAX# (512) 834-1266

MAGNETIC PARTICLE EXAMINATION RECORD

Project No.:	C6985	Site:	Intermountain Power Service Corp.			Date: 3/6/02	Time: N/A
Exam Area:	Unit 2	Line/Subassembly:	IP Rotor Diaphragm			Identification:	Gen. End Upper & lower #10
Examiner:	R. Dwyer	SNT Level:	II	Procedure:	Material	Surface Finish:	Sandblasted
Examiner:	R. Whitaker	SNT Level:	II	No.: MT-707	Brand: Magnuflux Type: 14 AM Prepared Bath Batch No.: 02A026	Surface Temp.:	70 Deg.
Examiner:		SNT Level:		Rev.: 6	Mixed With: N/A Batch No.: N/A	U.V. Lamp:	ARDROX 1020

Material Application	Current Type	Magnetization		S/N:
Dusting [ ] Spraying [X] Flooding [ ]	AC [ ] HWAC [ ] DC [X]	Machine Type: Magnuflux M530 S/N 95360 Type of Conductor: Draped Coil Current Level: 3000 Amp Turns	Coil Dia.: 48" Prod. Spacing: N/A	UV-007 Output: 800 mw/cm^2

Results:

Indication was noted on the upper half outer ring adjacent to leading edge of blade # 2, #3, & #15

No recordable indications were noted on the lower half

Blades are numbered looking in the direction of flow starting on left side going CW

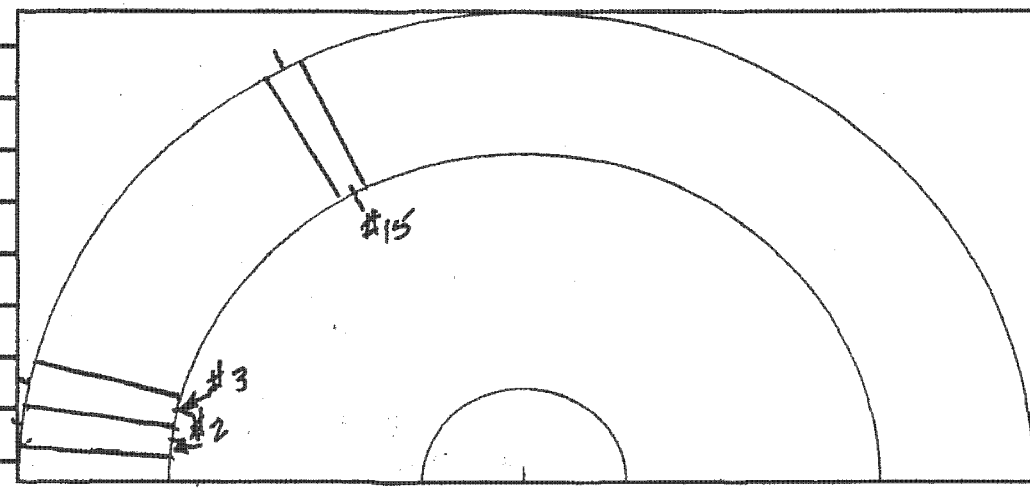

Reviewed By:	SNT Level:	Date:	Page of

FORM #204 - 11/4/95

IP7007238

REINHART
& ASSOCIATES, INC.
NONDESTRUCTIVE EVALUATION
SPECIALISTS
P.O BOX 9602, SUITE 303
AUSTIN, TEXAS 78766
(512) 834-6911 FAX# (512) 834-1266

MAGNETIC PARTICLE EXAMINATION RECORD

Project No.:	C6985	Site:	Intermountain Power Service Corp.			Date: 3/6/02	Time: N/A
Exam Area:	Unit 2	Line/Subassembly:	IP Rotor Diaphragm			Identification:	Turbine End Upper & Lower #12
Examiner:	R. Dwyer	SNT Level:	II	Procedure:	Material	Surface Finish:	Sandblasted
Examiner:	R. Whitaker	SNT Level:	II	No.: MT-707	Brand: Magnuflux Type: 14 AM Prepared Bath Batch No.: 02A026	Surface Temp.:	70 Deg.
Examiner:		SNT Level:		Rev.: 6	Mixed With: N/A Batch No.: N/A	U.V. Lamp:	ARDROX 1020

Material Application	Current Type	Magnetization		S/N:	
Dusting [ ] Spraying [X] Flooding [ ]	AC [ ] HWAC [ ] DC [X]	Machine Type: Magnulfux M530 S/N 95360 Type of Conductor: Draped Coil Current Level: 3000 Amp Turns	Coil Dia.: 48" Prod. Spacing: N/A	UV-007	Output: 800 mw/cm^2

Results:

Indication was noted on the leading edge of blade at the out ring attachment area on blades #20, #22, #26, & #28

No recordable indications were noted on the lower half

Blades are numbered looking in the direction of flow starting on left side going CW

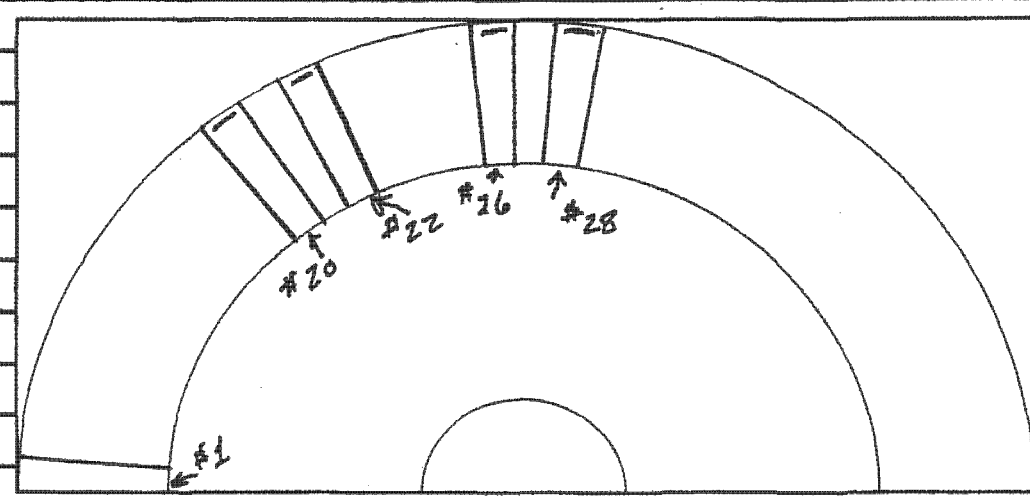

Reviewed By:	SNT Level:	Date:	Page of

FORM #204 - 11/4/95

IP7007239

REINHART
& ASSOCIATES, INC.
NONDESTRUCTIVE EVALUATION
SPECIALISTS
P.O BOX 9802, SUITE 303
AUSTIN, TEXAS 78766
(512) 834-8911 FAX# (512) 834-1266

MAGNETIC PARTICLE EXAMINATION RECORD

Project No.:	C6958	Site:	Intermountain Power Service Corp.	Date: 3/11/02	Time: N/A
Exam Area:	Unit 2	Line/Subassembly:	Stop Valves	Identification:	1,2,3 & 4 Stop Valve Screens

Examiner:	R. Dwyer	SNT Level:	II	Procedure:	Material	Surface Finish:	Sandblasted
Examiner:	R. Whitaker	SNT Level:	II	No.: MT-704	Brand: Magnuflux Type: 14 AM Prepared Bath Batch No.: 02A026	Surface Temp.:	65 Deg.
Examiner:		SNT Level:		Rev.: 2	Mixed With: N/A Batch No.: N/A	U.V. Lamp:	ARDROX 1020

Material Application	Current Type	Magnetization		S/N:
Dusting [ ] Spraying [X] Flooding [ ]	AC [X] HWAC [ ] DC [ ]	Machine Type: ARDROX AX-600 YOKE Type of Conductor: N/A Current Level: N/A	Coil Dia.: N/A Prod. Spacing: 4 to 6 inches	UV-007 Output: 800 mw/cm^2

Results:

Performed WFMT on stop valve screens 1,2,3,&4. Indications were noted in all four corners of the weld around the screen of all four screens

No other recordable indications were noted

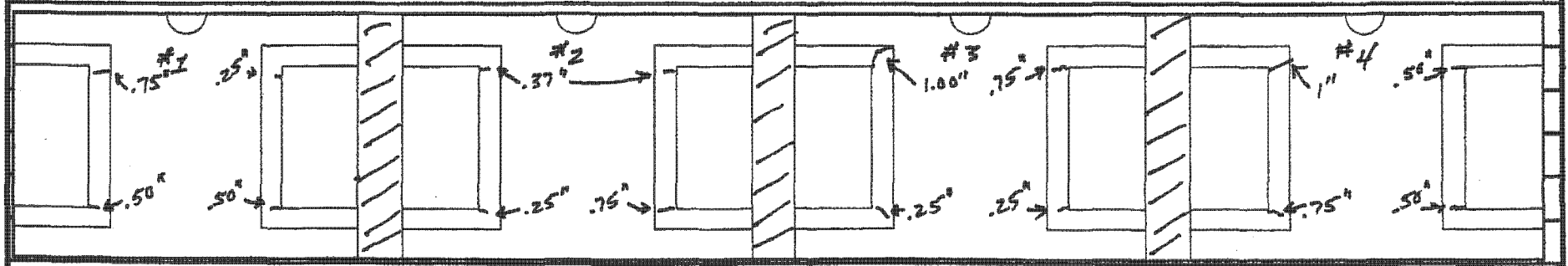

Reviewed By:	SNT Level:	Date:	Page of

FORM #204 - 11/4/95

IP7007240

Attachment 3

Penetrant Data Sheets

REINHART
& ASSOCIATES, INC.
NONDESTRUCTIVE EVALUATION
SPECIALISTS
P.O BOX 9602, SUITE 303
AUSTIN, TEXAS 78766
(512) 834-8911 FAX# (512) 834-1266

LIQUID PENETRANT EXAMINATION RECORD

Project No.:	C6985	Site:	Intermountain Power Service Corp.			Date: 3/7/02	Time: N/A
System/Component:	Unit 2	Line/Subassembly:	Control Valves			Identification:	Valves 1,2,3,&4
Examiner:	R. Dwyer	SNT Level:	II	Procedure:		Surface Finish:	As Found
Examiner:	R. Whitaker	SNT Level:	II	No.:	PT-803	Surface Temp.:	70 Deg
Examiner:		SNT Level:		Rev.:	1	Dwell Time:	15 Min.

Comments:

Cleaner/Remover:		Penetrant:		Developer:		Black Light:	
Brand:	Magnaflux	Brand:	Magnaflux	Brand:	Magnaflux	U.V. Lamp:	N/A
Type:	SKC-S	Type:	SKL-SP	Type:	SKD-S2	S/N:	N/A
Batch No.:	01L01K	Batch No.:	01K05K	Batch No.:	01M02K	Output:	N/A

Results:

Performed penetrant examination on the #1, #2, #3, & #4 body seats

No recordable indications were noted on seats #1 & #3

2 indications were noted on valve seat #2

3 jindications were noted on valve seat #4

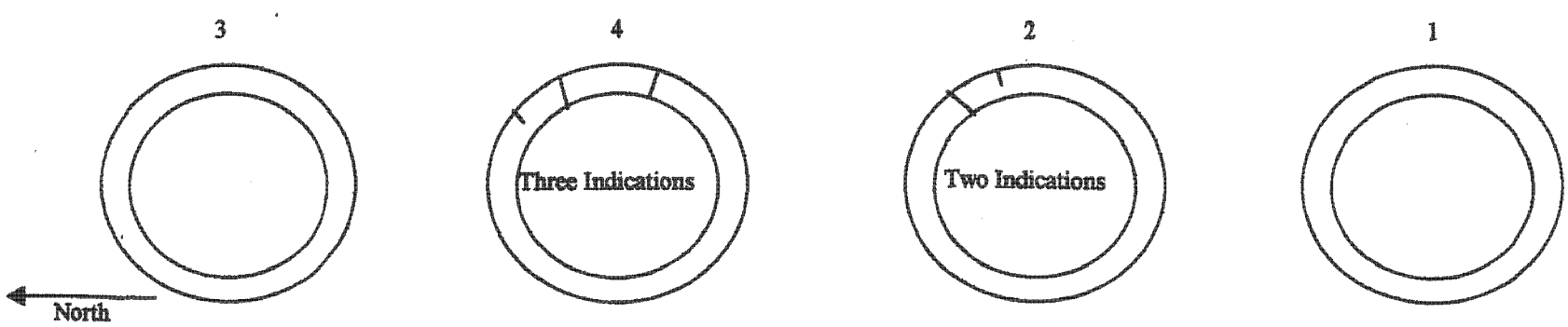

Reviewed By:	SNT Level:	Date:	Page of

FORM #603a - 1/25/96

IP7007242

REINHART
& ASSOCIATES, INC.
NONDESTRUCTIVE EVALUATION
SPECIALISTS
P.O BOX 9802, SUITE 303
AUSTIN, TEXAS 78766
(512) 834-8911 FAX# (512) 834-1266

March 15, 2002

Mr. Phong Do
Intermountain Power Service Corp.
850 W. Brush Wellman Road
Delta, Utah 84624

Reference: R&A Job # C6959

Subject: Field Report of Examinations of Intermountain Power Service Corporation Unit 2 IP Turbine Rotor.

Summary of Boreside Examinations

During the period of March 11 through 14., 2002 Reinhart & Associates, Inc. (R&A) performed a series of boreside nondestructive examinations on the Intermountain Power Unit 2 IP turbine rotor. The boreside examinations were performed in accordance with R&A procedure ND-102. Honing, bore plug removal, and fabrication was also performed R&A personnel.

IP Turbine Rotor

Upon removal of the generator end bore plug the IP rotor bore was found to be straight with no bottles or steps. The generator end bore plug was removed to provide access to the bore surface area. The physical dimensions of the plug bore and rotor bore is as follows:

Bore Length:	309 inches from the generator end coupling face	
Bore Dia.:	6.771 inches in diameter from coupling face	
Plug bore:	7.264 inches in diameter	New Plug: 7.273

Visual and Wet Fluorescent Magnetic Particle

The visual and wet fluorescent magnetic particle examinations of bore surfaces revealed no recordable indications.

Boreside Ultrasonic Examinations

The boreside ultrasonic examinations revealed no recordable indications

Dovetail Examination

The ultrasonic examination of stages 12 and 13 of the IP rotor was performed revealing no recordable indications.

The ultrasonic examination of stage 14 could not be performed due to the geometry of the wheel face of both the inlet and outlet sides.

The dovetail lifting measurements showed to be normal

A final report will follow which will include: preliminary engineering analysis, recommendation for a reinspection interval, detailed explanation of the examinations performed, and ultrasonic data plots and calibration sheets.

If you have any questions please call.

Roland Dwyer
NDE Inspection Specialist