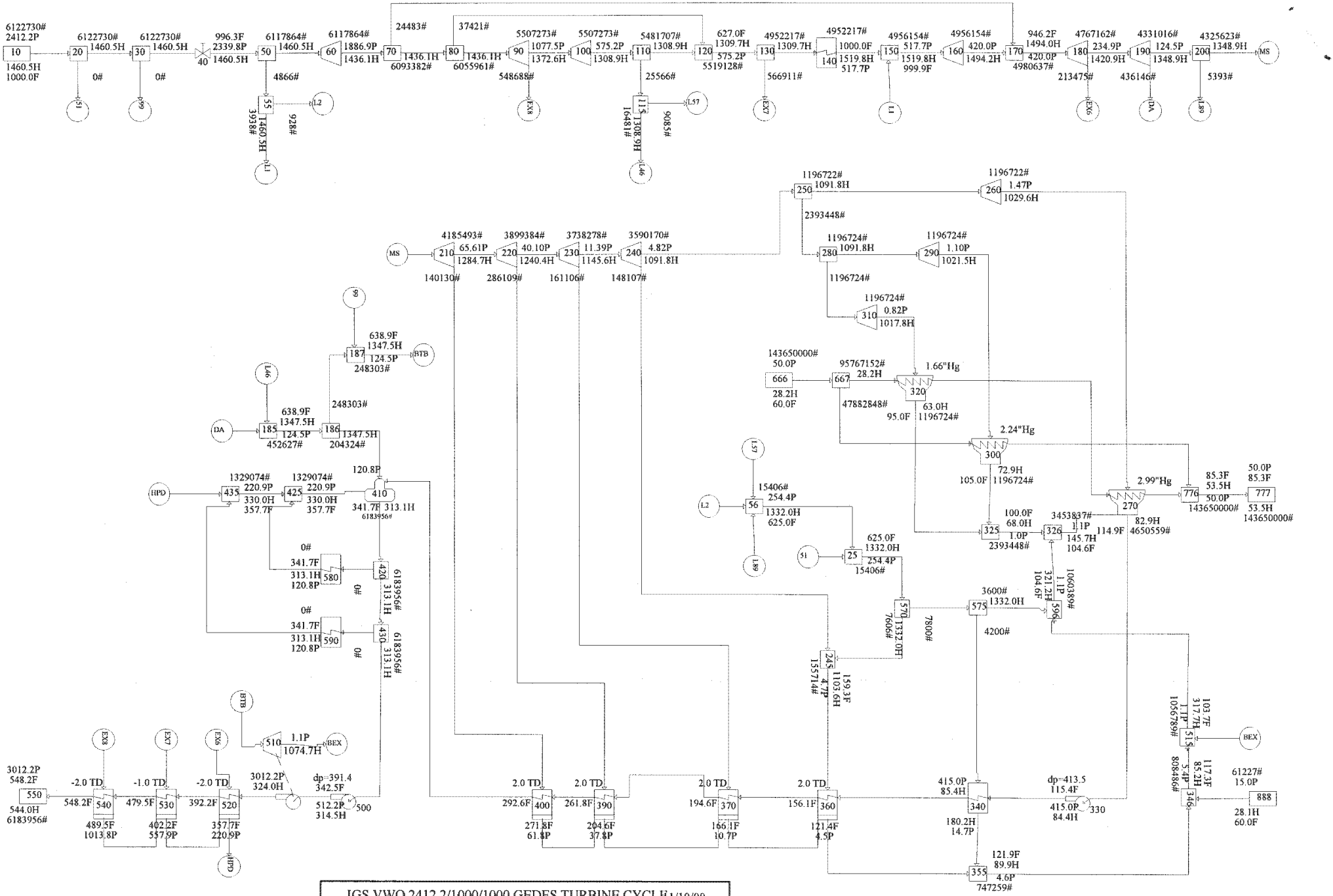

IGS VWO 2412.2/1000/1000 GEDES TURBINE CYCLE 11/10/00

862.7 MW 7730B/kWh NTCHR 6122730# Throttle Flow

86.12 % HP Efficiency 89.50 % IP Efficiency

IP7006848

SPECIAL OUTPUT TABLE OF SPECIFIED VARIABLES

INDEX	DESCRIPTION	VARIABLE(ID)		VALUE
1	Gross Power	BKGRO	(1)	862.7
2	Throttle Steam Flow	WW	(30)	6122730.
3	Throttle Pressure	PP	(30)	2412.2
4	Throttle temp	TT	(30)	1000.0
5	Hot Reheat temp	TT	(140)	1000.0
6	Net Turbine Cycle Heat Rate	OPVB	(26)	7730.3
7	HP turb efficiency	OPVB	(103)	86.12
8	HP turb power	OPVB	(215)	259.3
9	HP turb power % of total	OPVB	(212)	29.50
10	IP turb efficiency	OPVB	(119)	89.50
11	IP turb power	OPVB	(216)	244.3
12	IP turb power % of total	OPVB	(213)	27.79
14	LP turb power	OPVB	(217)	375.5
15	LP turb power % of total	OPVB	(214)	42.72
16	LPA Turb efficiency	OPVB	(133)	91.7
17	LPB turb efficiency	OPVB	(137)	89.8
18	LPC turbine efficiency	OPVB	(141)	87.0

DETAILED TURBINE PERFORMANCE TABLE A

COMPONENT	NUM FLOW ENDS	STAGE GRP EFFCYS REF. CASE (-)	LOAD CASE (-)	MECHANICAL POWER REF. CASE (MW)	LOAD CASE (MW)	EXTRACT FLOW AT LOAD STEAM EXTRACTION (L B M / H R)	LIQUID REMOVED
60/F-GS	2	0.81358	0.81358	4.36833E+01	4.36833E+01	N.A.	N.A.
90/F-HP	1	0.87880	0.87880	1.12719E+02	1.12719E+02	548688.	0.
100/	1	0.88270	0.88270	1.02890E+02	1.02890E+02	0.	0.
	SECTION EFFICIENCY AT LOAD = 0.88190 (RE THROTTLE INLET = 0.86610)						
160/F-IP	2	0.87619	0.87619	3.70540E+01	3.70540E+01	0.	0.
180/	2	0.88394	0.88394	1.06699E+02	1.06699E+02	213475.	0.
190/	2	0.89769	0.89769	1.00505E+02	1.00505E+02	436146.	0.
	SECTION EFFICIENCY AT LOAD = 0.89977						
210/F-LP	6	0.94488	0.94488	8.14708E+01	8.14708E+01	140130.	0.
220/	6	0.90854	0.90854	5.42914E+01	5.42914E+01	286109.	0.
230/	6	0.92222	0.92222	1.08287E+02	1.08287E+02	161106.	0.
240/	6	0.91696	0.91696	5.89629E+01	5.89629E+01	148108.	0.
260/	2	0.85622	0.85622	2.18376E+01	2.18376E+01	0.	0.
	SECTION EFFICIENCY AT LOAD = 0.92165						
290/	2	0.78962	0.78962	2.46683E+01	2.46683E+01	0.	0.
	SECTION EFFICIENCY AT LOAD = 0.90308						
310/	2	0.70149	0.70149	2.59684E+01	2.59684E+01	0.	0.
	SECTION EFFICIENCY AT LOAD = 0.87427						
510/STPM	1	N.A.	0.74580	N.A.	1.98492E+01	N.A.	N.A.

NOTE, GOVERNING STAGE SHELL CONDITIONS AT VWO:

COMPONENT NUMBER 60, 1886.910 PSIA
1436.1408 BTU/LBM
1.53943 BTU/LBM-F

IP7006851

DETAILED TURBINE PERFORMANCE TABLE B

COMPONENT	STG GROUP BOWL FLOW (LBM/HR)	PRESSURE AT LOAD BOWL (PSIA)	PRESSURE AT LOAD SHELL (PSIA)	ENTHALPY AT LOAD BOWL (BTU/LBM)	ENTHALPY AT LOAD SHELL (BTU/LBM)	ENTROPY AT LOAD BOWL (BTU/LB-F)	ENTROPY AT LOAD SHELL (BTU/LB-F)	PRESS RATIO (-)	SHELL FLOW COEFF (*)	EXTR PRESS DROP (-)
60/F-GS	6117864.	2339.83	1886.89	1460.5	1436.1	1.535	1.539	1.24	87391.	N.A.
90/F-HP	6055961.	1886.89	1077.50	1436.1	1372.6	1.539	1.547	1.75	131873.	.03
100/	5507273.	1077.50	575.24	1372.6	1308.9	1.547	1.554	1.87	N.A.	.00
160/F-IP	4956154.	507.42	419.97	1519.8	1494.2	1.735	1.738	1.21	339425.	.00
180/	4980637.	419.97	234.85	1494.0	1420.9	1.738	1.745	1.79	549307.	.03
190/	4767162.	234.85	124.55	1420.9	1348.9	1.745	1.753	1.89	N.A.	.00
210/F-LP	4325623.	120.77	65.61	1348.9	1284.7	1.756	1.760	1.84	1517395.	.03
220/	4185493.	65.61	40.10	1284.7	1240.4	1.760	1.765	1.64	2196197.	.03
230/	3899384.	40.10	11.39	1240.4	1145.6	1.765	1.777	3.52	6461795.	.03
240/	3738278.	11.39	4.82	1145.6	1091.8	1.777	1.785	2.36	4666063.	.03
260/	1196722.	4.82	1.47	1091.8	1029.6	1.785	1.803	3.28	N.A.	.00
290/	1196724.	4.82	1.10	1091.8	1021.5	1.785	1.818	4.38	N.A.	.00
310/	1196724.	4.82	0.82	1091.8	1017.8	1.785	1.842	5.91	N.A.	.00
510/STPM	248303.	124.55	1.06	1347.5	1074.7	1.751	1.916	117.	N.A.	N.A.

DETAILED TURBINE PERFORMANCE TABLE C

BASE END POINT PRESSURE IS 1.500 IN.HG

COMP NUMB	ACTUAL ANNULUS VELOCITY REF (FT/SEC)	ACTUAL ANNULUS VELOCITY LOAD (FT/SEC)	SONIC ANNULUS VELOCITY REF (FT/SEC)	SONIC ANNULUS VELOCITY LOAD (FT/SEC)	EFFICIENCY AT BASE END PRESSURE (-)	EXHAUST LOSS (BTU/LBM)	ENERGY END POINTS ELEP BASE P (B T U / L B M)	ELEP COND P (B T U / L B M)	ELEP CHOK P (B T U / L B M)	CHOKE PRESS (PSIA)

260	634.1	634.1	1452.5	1452.5	0.91066	7.56	990.73	1022.00	N.A.	N.A.
290	824.7	824.7	1441.2	1441.2	0.91066	12.85	990.73	1008.64	N.A.	N.A.
310	1083.7	1083.7	1429.7	1429.7	0.91066	22.59	990.73	995.19	N.A.	N.A.