U1 Flow Set 6750 kpph
HP Eff 92%
RH Press Drop 6%
PF .98
Target BP A 3.87
B 2.89
C 2.70

Output

Unit 1
Date of Calculation: 11/16/00

	1	2	3	4	5
Gross Generation, Mw	891.61	891.56	870.91	930.02	930.02
Net turbine cycle HR	7654	7944	8089	7874	7874
HP Section Efficiency	87.69	85.55	85.55	92.00	92.00
IP section Efficiency	88.71	91.18	90.93	91.19	91.19
Cycle Losses	0	0	0	0	0
Throttle Flow, kpph	6308.13	6536.41	6526.10	6750.00	6750.00
1st Stage Press, psia	1953.0	1983.6	1982.3	1982.9	1982.9
7th Stage Press, psia	592.8	574.0	592.7	590.9	590.9
IP Inlet Press (upstream CRV's), psia	533.5	540.0	533.4	555.4	555.4
14th Stage Shell Press, psia	130.2	128.8	125.7	130.6	130.6
Reheat Pressure Drop	10.00	5.92	10.00	6.00	6.00
HP Turb Press Ratio	3.29	3.46	3.34	3.36	3.36
IP Turb Press Ratio	4.02	4.11	4.16	4.17	4.17
Boiler Blowdown Flow, lb/hr	6308	27303	27260	6750	6750
Cycle Makeup Flow, lb/hr	63081	27303	272599	67500	67500
Air Preheat Flow, lb/hr	0	0	0	0	0
Boiler Feed Flow, kpph	6371	6521	6776	6818	6818
SH Attemp Flow, lb/hr	0	42803	22860	0	0
RH Attemp Flow, lb/hr	0	0	0	0	0

Start 10/16/00 12:00
End 10/16/00 14:00

1 U1 BENCHMARK FROM GE TEST 3
2 TEST DATA REDUCTION U1
3 STANDARDIZATION U1
4 FW HTR UPGRADE & MS SPRAYS TO DESIGN
5 5% op option

IP7006830

1,178.306

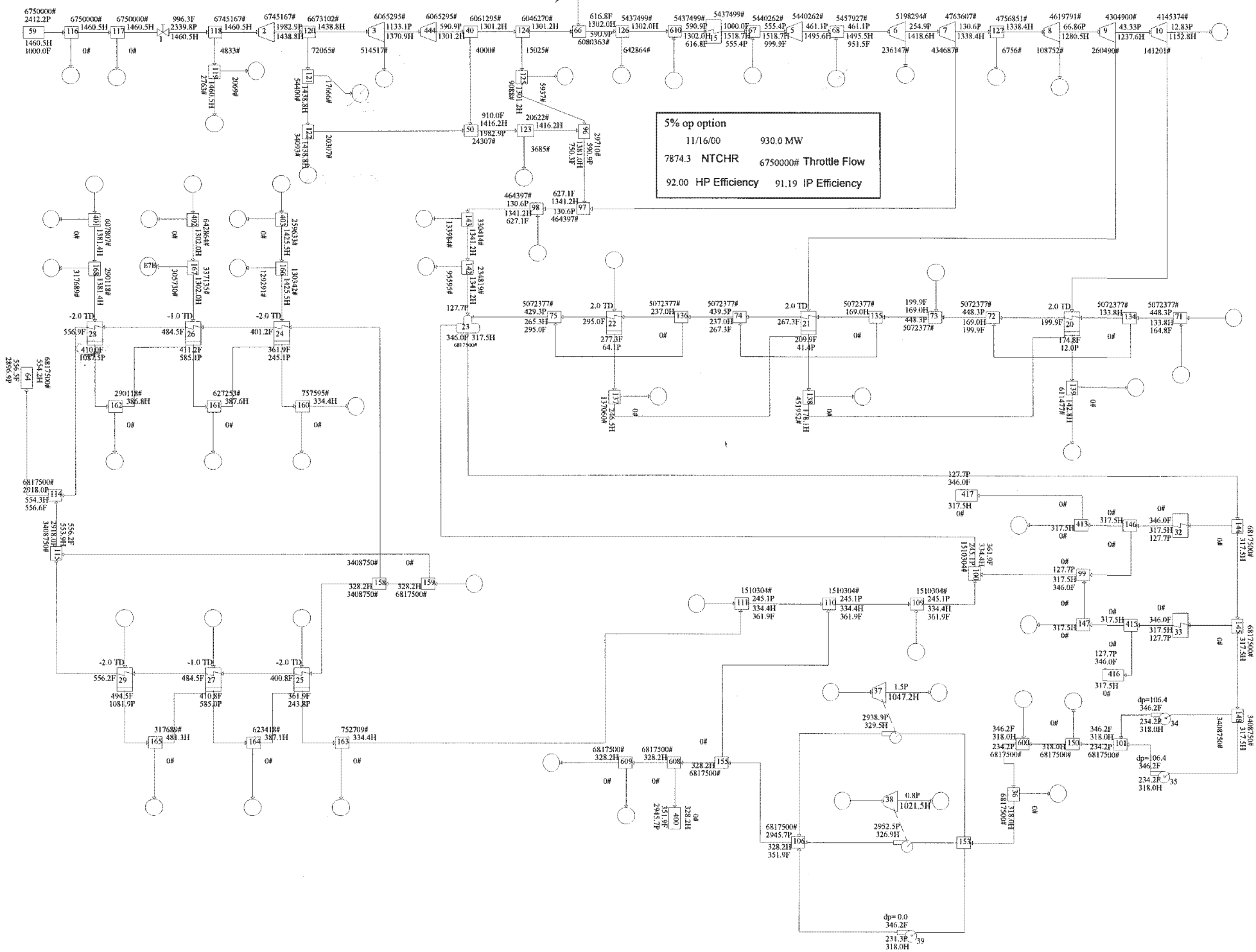

IP7006831

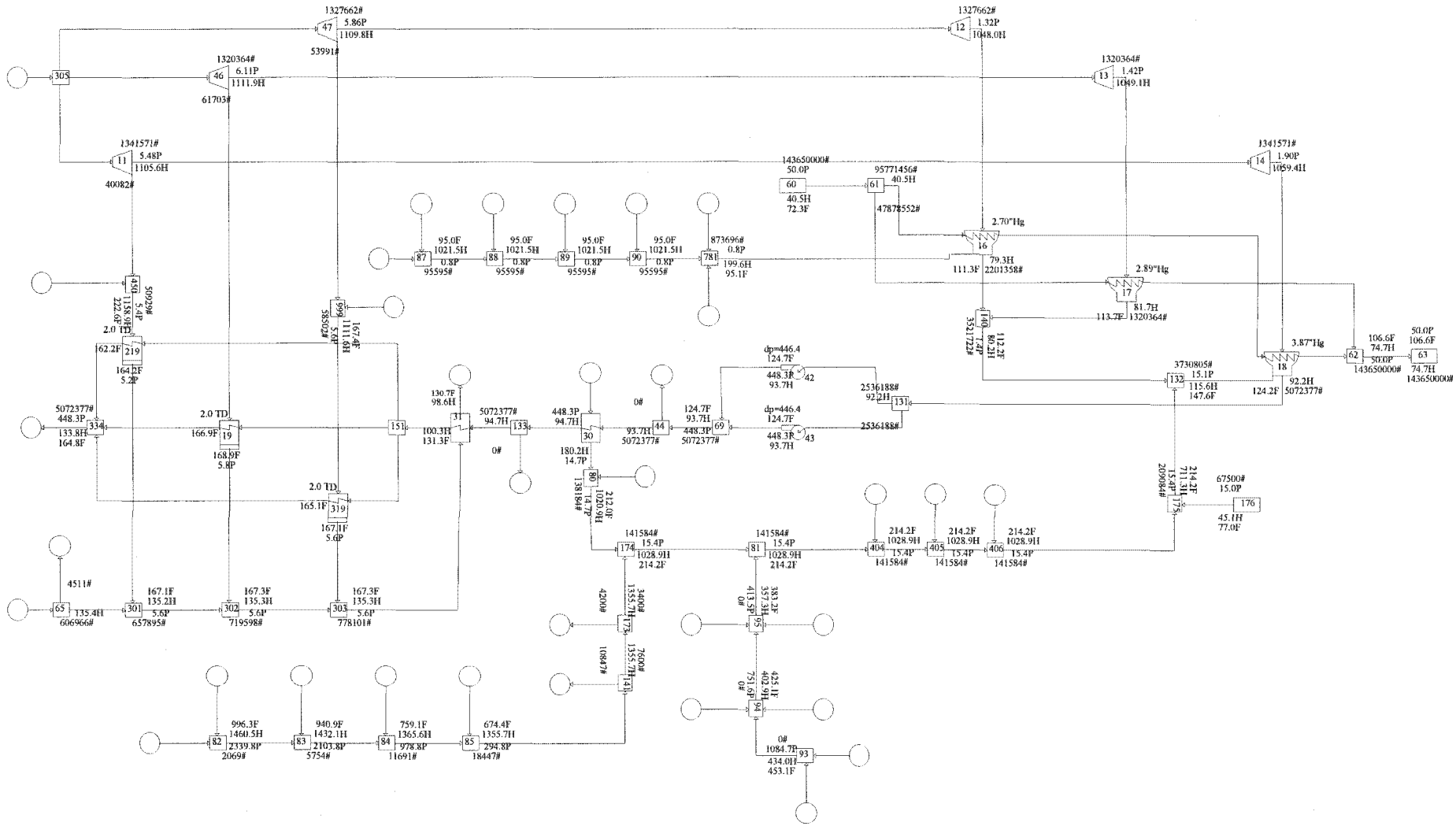

5% op option

11/16/00 930.0 MW

7874.3 NTCHR 6750000# Throttle Flow

92.00 HP Efficiency 91.19 IP Efficiency

IP7006832

PEPSE CODE BY SCIENTECH, INC, IDAHO FALLS, ID.
VERSION 64A CREATED 17 DEC 99 DATE 11/16/00. PAGE 1
5% op option

** SAVE CASE **

DETAILED TURBINE PERFORMANCE TABLE A

COMPONENT	NUM FLOW ENDS	STAGE GRP EFFCYS REF. CASE (-)	LOAD CASE (-)	MECHANICAL POWER REF. CASE (MW)	LOAD CASE (MW)	EXTRACT FLOW AT LOAD STEAM EXTRACTION (L B M / H R)	LIQUID REMOVED
2/GENL	1	0.82172	0.93620	3.83285E+01	4.28683E+01	0.	0.
3/	1	0.89232	0.93620	1.17044E+02	1.30846E+02	514517.	0.
444/	1	0.90352	0.93620	1.08834E+02	1.23927E+02	0.	0.
	SECTION EFFICIENCY AT LOAD = 0.94171 (RE THROTTLE INLET = 0.92445)						
					297.6413		
5/	2	0.90064	0.90064	4.11824E+01	3.66973E+01	0.	0.
6/	2	0.90022	0.91115	1.09226E+02	1.22429E+02	236147.	0.
7/	2	0.90773	0.95584	1.00239E+02	1.22123E+02	434687.	0.
	SECTION EFFICIENCY AT LOAD = 0.93800				281.2493		
8/	6	0.95149	0.82723	8.33826E+01	8.02733E+01	108752.	0.
9/	6	0.91900	1.00213	5.43086E+01	5.73787E+01	260491.	0.
10/	6	0.93155	0.85524	1.09462E+02	1.06540E+02	141201.	0.
46/	2	0.92096	0.79318	2.03811E+01	1.65855E+01	61703.	0.
13/	2	0.80115	0.69170	2.76291E+01	2.42992E+01	0.	0.
	SECTION EFFICIENCY AT LOAD = 0.83460						
47/	2	0.92095	0.79117	2.02893E+01	1.74175E+01	53991.	0.
12/	2	0.71310	0.67151	2.89709E+01	2.40557E+01	0.	0.
	SECTION EFFICIENCY AT LOAD = 0.82852						
11/	2	0.92092	0.80317	2.01308E+01	1.91194E+01	40082.	0.
14/	2	0.86946	0.69406	2.53583E+01	1.81553E+01	0.	0.
	SECTION EFFICIENCY AT LOAD = 0.84506						
					363.8246		
37/STPM	1	0.85000	0.85000	1.00517E+01	1.15425E+01	N.A.	N.A.
38/	1	0.85000	0.85000	1.00517E+01	8.95486E+00	N.A.	N.A.

942.7152

IP7006833

** SAVE CASE **

DETAILED TURBINE PERFORMANCE TABLE B

	COMPONENT	STG GROUP BOWL FLOW (LBM/HR)	PRESSURE AT LOAD BOWL (PSIA)	PRESSURE AT LOAD SHELL (PSIA)	ENTHALPY AT LOAD BOWL (BTU/LBM)	ENTHALPY AT LOAD SHELL (BTU/LBM)	ENTROPY AT LOAD BOWL (BTU/LB-F)	ENTROPY AT LOAD SHELL (BTU/LB-F)	PRESS RATIO (-)	SHELL FLOW COEFF (*)	EXTR PRESS DROP (-)
1	2/GENL	6745167.	2339.83	1982.91	1460.5	1438.8	1.535	1.536	1.18	90541.	.00
2-5	3/	6673102.	1982.91	1133.09	1438.8	1370.9	1.536	1.540	1.75	137856.	.01
6-7	444/	6065295.	1133.09	590.85	1370.9	1301.2	1.540	1.545	1.92	N.A.	.00
8	5/	5440262.	544.29	461.08	1518.7	1495.6	1.727	1.729	1.18	337621.	.00
9-11	6/	5457927.	461.08	254.93	1495.5	1418.6	1.729	1.735	1.81	550685.	.01
12-14	7/	5198294.	254.93	130.58	1418.6	1338.4	1.735	1.738	1.95	N.A.	.00
15	8/	4756851.	127.26	66.86	1338.4	1280.5	1.741	1.754	1.90	1616776.	.01
16	9/	4619791.	66.86	43.33	1280.5	1237.6	1.754	1.753	1.54	2226393.	.01
17-18	10/	4304900.	43.33	12.83	1237.6	1152.8	1.753	1.775	3.38	2145779.	.02
19B	46/	1382068.	12.83	6.11	1152.8	1111.9	1.775	1.792	2.10	4122883.	.01
20B	13/	1320364.	6.11	1.42	1111.9	1049.1	1.792	1.841	4.30	N.A.	.00
19C	47/	1381653.	12.83	5.86	1152.8	1109.8	1.775	1.793	2.19	4311911.	.01
20C	12/	1327662.	5.86	1.32	1109.8	1048.0	1.793	1.846	4.43	N.A.	.00
19A	11/	1381653.	12.83	5.48	1152.8	1105.6	1.775	1.794	2.34	4641766.	.01
20A	14/	1341571.	5.48	1.90	1105.6	1059.4	1.794	1.828	2.88	N.A.	.00
	37/STPM	133984.	126.73	1.47	1341.2	1047.2	1.744	1.834	86.	N.A.	N.A.
	38/	95595.	123.01	0.82	1341.2	1021.5	1.747	1.849	151.	N.A.	N.A.

DETAILED TURBINE PERFORMANCE TABLE C

BASE END POINT PRESSURE IS 1.500 IN.HG

COMP NUMB	ACTUAL ANNULUS VELOCITY REF (FT/SEC)	ACTUAL ANNULUS VELOCITY LOAD (FT/SEC)	SONIC ANNULUS VELOCITY REF (FT/SEC)	SONIC ANNULUS VELOCITY LOAD (FT/SEC)	EFFICIENCY AT BASE END PRESSURE (-)	EXHAUST LOSS (BTU/LBM)	ENERGY END POINTS ELEP BASE P (B T U / L B M)	ELEP COND P	ELEP CHOK P	CHOKE PRESS (PSIA)

13	N.A.	735.8	N.A.	1451.2	0.81404	10.22	1008.26	1038.85	N.A.	N.A.
12	N.A.	788.5	N.A.	1448.4	0.81169	12.04	1008.67	1035.94	N.A.	N.A.
14	N.A.	572.5	N.A.	1462.9	0.82212	7.81	1006.82	1051.61	N.A.	N.A.