Submittal #V 6-10-82

481 HB 784

FOR STUDY PURPOSES ONLY

TURBINE AND EXTRACTION ARRANGEMENT IS SCHEMATIC ONLY

CALCULATED DATA   NOT GUARANTEED

RATING FLOW IS 5831171. M   AT INLET STEAM CONDITIONS OF 2412.2 PSIA AND 1000.0 T TO ASSURE THAT THE TURBINE WILL PASS THIS FLOW, CONSIDERING VARIATIONS IN FLOW COEFFICIENTS FROM EXPECTED VALUES, SHOP TOLERANCES ON DRAWING AREAS, ETC. WHICH MAY AFFECT THE FLOW, THE TURBINE IS BEING DESIGNED FOR A DESIGN FLOW (RATING FLOW PLUS 5.0 PERCENT) OF 6122730. M
THE EQUIVALENT DESIGN FLOW AT 2532.2 PSIA AND 1000.0 T IS 6449000 M
THE VALUE OF GENERATOR OUTPUT SHOWN ON THIS HEAT BALANCE IS AFTER ALL POWER FOR EXCITATION AND OTHER TURBINE-GENERATOR AUXILIARIES HAS BEEN DEDUCTED.

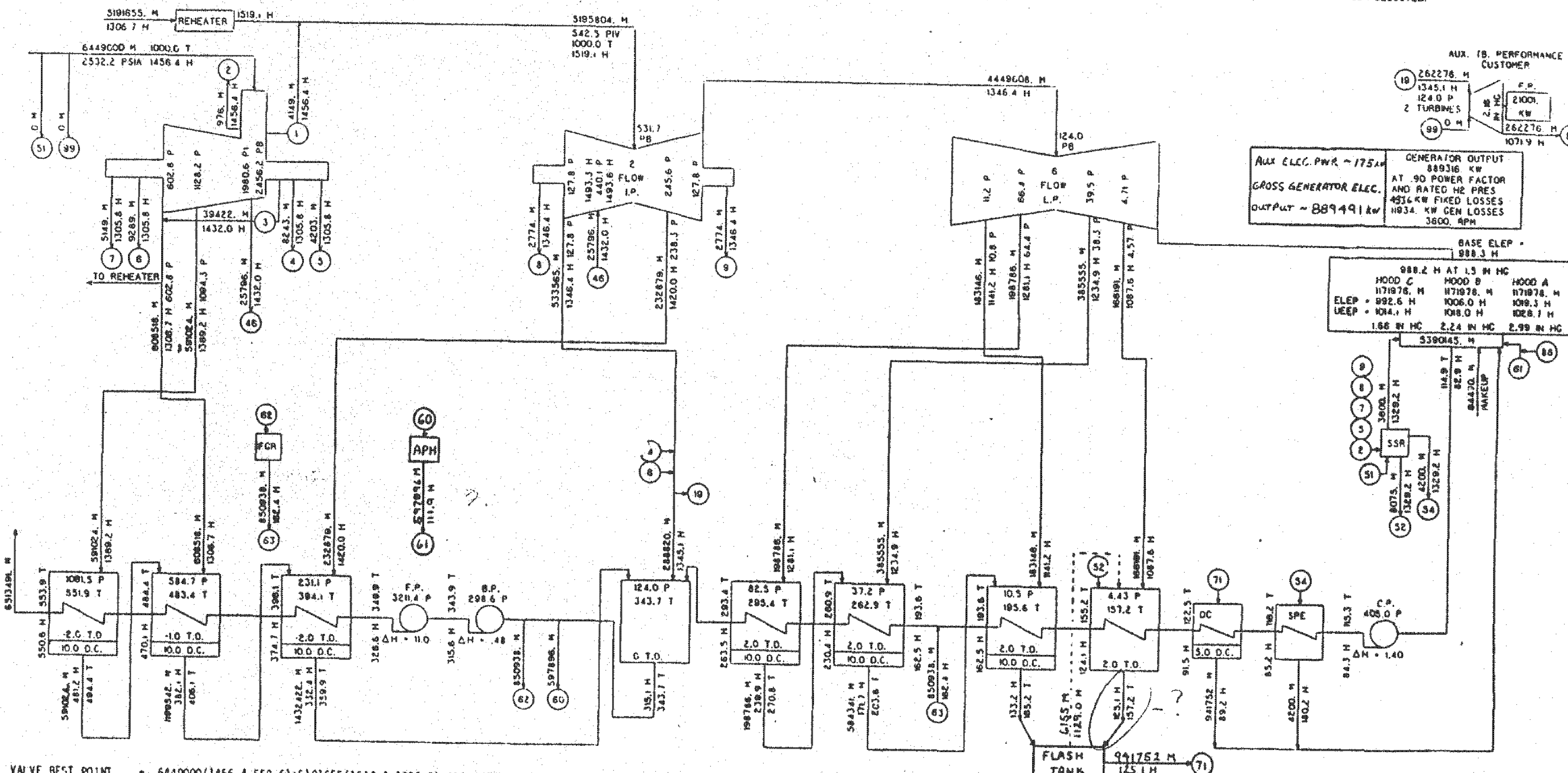

VALVE BEST POINT NET HEAT RATE (CUSTOMER'S DEFINITION) = $\frac{6449000(1456.4-550.6)+5191655(1519.1-1306.7)+6513491(.48)+5390145(1.40)+6449(720.5-550.6)}{889316}$ = 7821.7 BTU/KW-HR

LEGEND - CALCULATIONS BASED ON 1967 ASME STEAM TABLES
M - FLOW-LB/HR
P - PRESSURE-PSIA
H - ENTHALPY-BTU/LB
T - TEMPERATURE-F DEGREES

TC6F 30.0 IN LSB   3600 RPM
2400.0 PSIA   1000. / 1000 T
GEN- 991000. KVA   90 PF LIQ

Kirk K Major

GENERAL ELECTRIC COMPANY SCHENECTADY N.Y.

481 HB 784

6/10/82

VWO 5, 0P

IP7006829