INTERMOUNTAIN POWER AGENCY
INTERMOUNTAIN POWER PROJECT #1
TB NO. 270T150

* ALSO SEE DIAGRAM OF STEAM SEAL PIPING 903E892

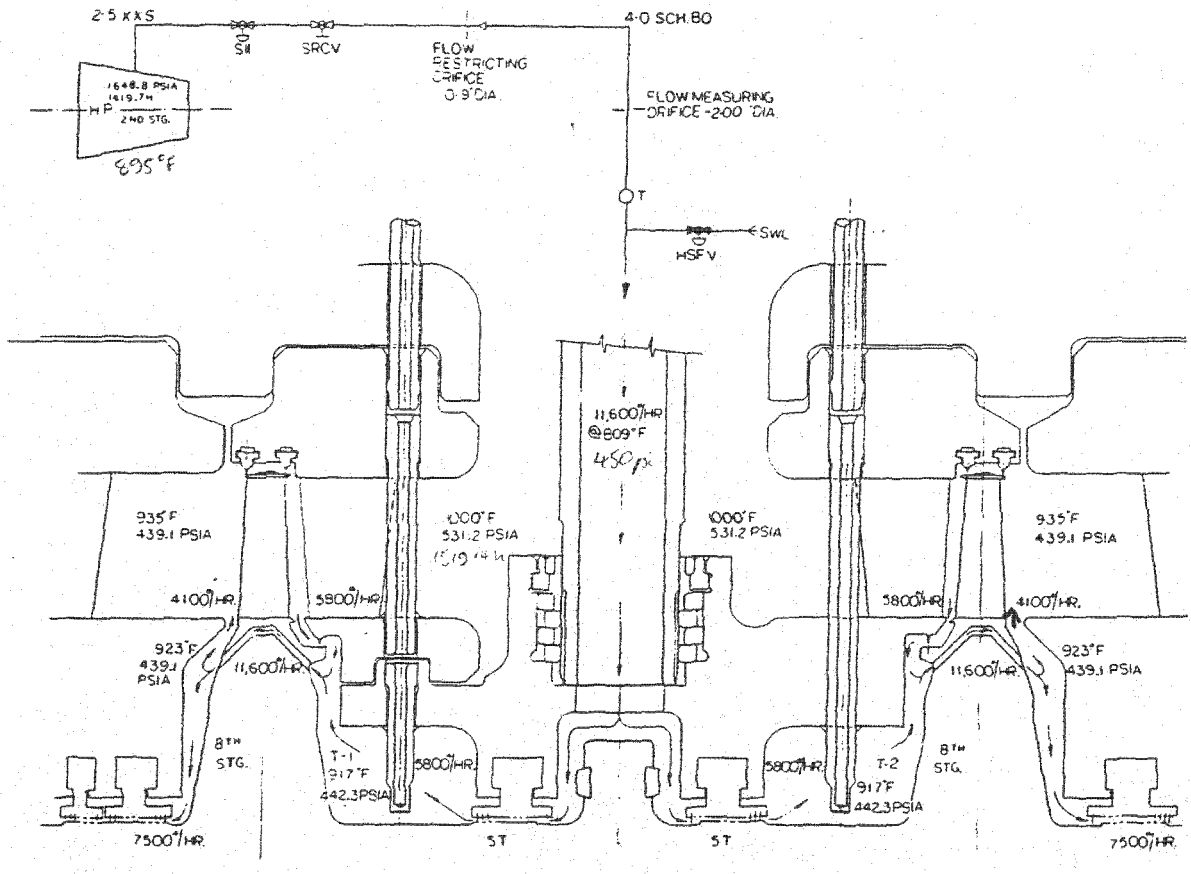

THERMOCOUPLE	EXPECTED NORM TEMP	ALARM TEMP	"RUN 1" MONTH TEMP	"SHUTDOWN" TEMP	MAX. EXPECTED (NO COOLING)
T-1 & T-2	917°F	937°F	977°F	1017°F	1002°F

Cooling Steam Diagram
Dwg. 148D5583, Rev. 0

Fig. 5-17

IP7006781