INTERMOUNTAIN GENERATING STATION UNITS 1 & 2

HP TURBINE RETROFIT

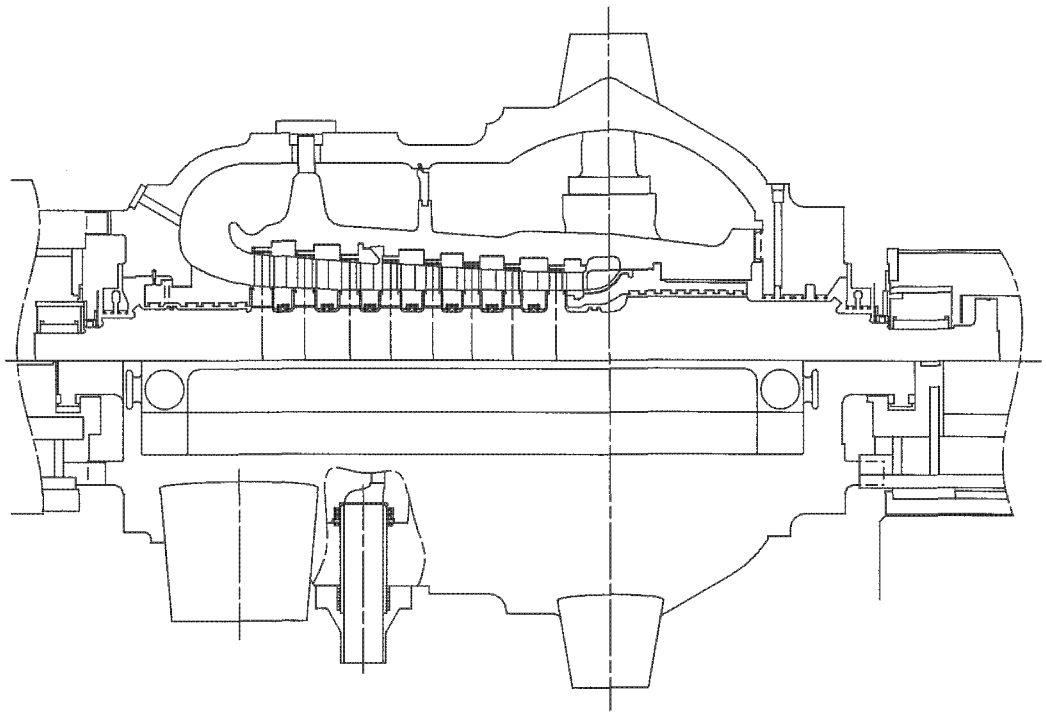

This drawing and any information or descriptive matter set out hereon are the confidential and copyright property of ALSTOM POWER, Rugby, England and must not be disclosed, loaned, copied or used for manufacture, tendering or for any other purpose without their written permission. ©2000

Issue	Date
C	
B	
A	

ALSTOM

HP TURBINE RETROFIT

131184

ALSTOM POWER, Rugby, England

IP7006697